PB83-168054

EPA (Environmental Protection Agency) Utility FGD (Flue Gas Desulfurization) Survey Volume I. Categorical Summaries of FGD Systems

PEDCo-Environmental, Inc.
Cincinnati, OH

Prepared for

Industrial Environmental Research Lab.
Research Triangle Park, NC

Sep 82

U.S. DEPARTMENT OF COMMERCE
National Technical Information Service
NTIS

PB83-164054

EPA-600/7-82-058a
September 1982

EPA UTILITY FGD SURVEY
OCTOBER - DECEMBER 1981

VOLUME I. CATEGORICAL SUMMARIES OF FGD SYSTEMS

By

Melia, M.T. and N.G. Bruck

PEDCo Environmental, Inc.
11499 Chester Road
Cincinnati, Ohio 45246-0100

Contract No. 68-02-3173
Task 71

EPA Project Officer: N. Kaplan
Industrial Environmental Research Laboratory
Office of Environmental Engineering and Technology
Research Triangle Park, North Carolina 27711

Prepared for

U.S. ENVIRONMENTAL PROTECTION AGENCY
Office of Research and Development
Washington, DC 20460

TECHNICAL REPORT DATA
(Please read Instructions on the reverse before completing)

1 REPORT NO. EPA-600/7-82-058a	2.	3 RECIPIENT'S ACCESSION NO. PB83 168054
4 TITLE AND SUBTITLE EPA Utility FGD Survey: October-December 1981 Volume I. Categorical Summaries of FGD Systems		5 REPORT DATE September 1982
		6. PERFORMING ORGANIZATION CODE
7 AUTHOR(S) M.Melia and N.Bruck		8 PERFORMING ORGANIZATION REPORT NO
9 PERFORMING ORGANIZATION NAME AND ADDRESS PEDCo Environmental, Inc. 11499 Chester Road Cincinnati, Ohio 45246		10. PROGRAM ELEMENT NO
		11 CONTRACT/GRANT NO 68-02-3173, Task 71
12 SPONSORING AGENCY NAME AND ADDRESS EPA, Office of Research and Development Industrial Environmental Research Laboratory Research Triangle Park, NC 27711		13. TYPE OF REPORT AND PERIOD COVERED Quarterly; 10-12/81
		14 SPONSORING AGENCY CODE EPA/600/13

15. SUPPLEMENTARY NOTES IERL-RTP project officer is Norman Kaplan, Mail Drop 61, 919/541-2556. Related reports are in the ~~EPA-600/7-80~~-029 ~~and~~ ~~-81-012~~ series.

16 ABSTRACT The report is the first full compilation (not a supplement) since the October-December 1980 report (EPA-600/7-81-012a and -12b). Because the next three reports are to be supplements, this issue should be retained for reference throughout the year. The report, generated by a computerized data base system, presents a survey of operational and planned domestic utility flue gas desulfurization (FGD) systems. It summarizes information contributed by the utility industry, process suppliers, regulatory agencies, and consulting engineering firms. Domestic FGD systems are tabulated alphabetically by development status (operational, under construction, or in planning stages), utility company, process supplier, process, and waste disposal practice. It presents data on boiler design, FGD system design, fuel characteristics, and actual performance. Process flow diagrams and FGD system economic data are appended. Section 3 of the report, because of its length, appears in Volume II.

17. KEY WORDS AND DOCUMENT ANALYSIS

a. DESCRIPTORS	b. IDENTIFIERS/OPEN ENDED TERMS	c. COSATI Field/Group
Pollution	Pollution Control	13B
Flue Gases	Stationary Sources	21B
Desulfurization	Utility Boilers	07A,07D
Electric Utilities		
Waste Disposal		15E
Boilers		13A
Maintenance		

18 DISTRIBUTION STATEMENT Release to Public	19 SECURITY CLASS (This Report) Unclassified	21 NO OF PAGES 392
	20 SECURITY CLASS (This page) Unclassified	22 PRICE

EPA Form 2220-1 (9-73)

NOTICE

This report (prepared by PEDCo Environmental, Inc., Cincinnati, Ohio under EPA Contract No. 68-02-3173, Task No. 71) is provided as an information transfer document. Data in this report are supplied voluntarily by utility representatives; flue gas desulfurization (FGD) system suppliers and designers; regulatory agencies; and others. Neither EPA nor the designated contractor warrants the accuracy or completeness of information contained in this report.

Distribution of a project summary will be made to organizations and individuals indicating a specific interest in the field of FGD technology. Those interested can get on the mail list for the project summary by contacting Norm Kaplan, Industrial Environmental Research Laboratory, at 919/541-2556, or the Emission and Effluent Technology Branch secretary at 919/541-2578. Copies of the full report and preceding issues can be purchased from National Technical Information Service, Springfield, Virginia, 22161.

This report presents a summary of the FGD system design and performance data from a computerized data based called, "Flue Gas Desulfurization Information System" (FGDIS). Access to the FGDIS is available to the public (subject to the limitations expressed in the paragraph above) through the National Technical Information Service (NTIS) for a non-profit usage charge. Users have the capability of accessing the additional design and performance data stored within the data base that cannot be conveniently printed in this report. Direct access to the data base allows statistical analyses of the data (e.g., averages, maxima, minima, and standard deviation of various parameters) and tabulation of the data to fit the individual informational needs of the user. Those interested should contact Walter Finch (NTIS) at 703/487-4808.

This document has been reviewed in accordance with U.S. Environmental Protection Agency policy and approved for publication. Mention of trade names or commercial products does not constitute endorsement or recommendation for use.

USE OF THIS REPORT

This report is the first in a series of four issues. The succeeding three issues will be supplemental in nature. This report is the first full compilation since the October-December 1980 report (EPA-600/7-81-012a&b). Because the next three reports are to be supplements, this issue should be retained for reference throughout the year. Much of the design and performance data contained in this issue will not be published again until February 1983. Supplemental issues are cumulative in nature, so that it is necessary only to retain the latest issue and this report to have all the available information.

This report contains a number of tables presenting tabulations of some of the key data for SO_2 control systems on utility boilers (e.g., categorical summaries by FGD system supplier, FGD system status, disposal practices, etc.). Detailed design and performance data for operational FGD systems (Section 3) appears in Volume II of this report. Design and performance data for operational Japanese FGD systems and domestic particle scrubbers are included in this report (Volume I); however, the information was not updated during 1981. A section is also included for terminated FGD systems. These are experimental or demonstration FGD systems that were eventually shut down or FGD systems applied to boilers that were later retired. The Executive Summary contains the number and capacity of FGD systems as of the end of December 1981, future projections (December 1999) of controlled and uncontrolled generating capacity, and unit by unit summaries of status changes (e.g., contract awarded, under construction, operational, etc.) and performance (e.g., FGD system availability) during the period.

Appended to this report is a section containing reported and adjusted cost data for U.S. FGD systems in which operational systems are stressed (Appendix A). Also included in the appendices are definitions, a table of unit notation, and FGD system process flow diagrams.

ABSTRACT

This report, which is generated by a computerized data base system, presents a survey of operational and planned domestic utility flue gas desulfurization (FGD) systems, operational domestic particle scrubbers, and Japanese coal-fired utility boiler FGD installations. It summarizes information contributed by the utility industry, system and equipment suppliers, system designers, research organizations, and regulatory agencies. It presents data on system design, fuel characteristics, operating history and actual performance. Unit by unit dependability parameters are included and problems and solutions associated with the boilers, scrubbers, and FGD systems are discussed.

The domestic FGD systems are tabulated alphabetically by development status (operational, under construction, or in the planning stages), utility company, system supplier, process, waste disposal practice, and regulatory class. FGD system economic data, definitions, and a glossary of terms are appended to the report. Current data for domestic FGD systems show 94 systems in operation, 40 systems under construction, and 88 planned systems. Projected 1999 FGD controlled capacity in the U.S. is 107,351 MW.

CONTENTS

		Page
Notice		ii
Use of This Report		iii
Abstract		iv
Tables		xi
Executive Summary and Highlights		xii
Section 1	Summary List of FGD Systems	1
Section 2	Status of FGD Systems	9
Section 3	Design and Performance Data for Operational FGD Systems	47*
	Alabama Electric	
	Tombigbee 2	47*
	Tombigbee 3	56*
	Arizona Electric Power	
	Apache 2	63*
	Apache 3	73*
	Arizona Public Service	
	Cholla 1	81*
	Cholla 2	99*
	Cholla 4	105*
	Four Corners 1	108*
	Four Corners 2	112*
	Four Corners 3	116*
	Basin Electric Power	
	Laramie River 1	120*
	Laramie River 2	127*
	Big Rivers Electric	
	Green 1	131*
	Green 2	138*
	Central Illinois Light	
	Duck Creek 1	143*
	Central Illinois Public Service	
	Newton 1	159*
	Cincinnati Gas & Electric	
	East Bend 2	167*
	Colorado Ute Electric	
	Craig 1	171*
	Craig 2	178*

*Section 3, pages 47-851, appear in Volume II.

CONTENTS (continued)

	Page
Columbus & Southern Ohio Electric	
Conesville 5	187*
Conesville 6	200*
Commonwealth Edison	
Powerton 51	210*
Cooperative Power	
Coal Creek 1	215*
Coal Creek 2	222*
Delmarva Power & Light	
Delaware City 1	227*
Delaware City 2	233*
Delaware City 3	239*
Duquesne Light	
Elrama 1-4	245*
Phillips 1-6	261*
Hoosier Energy	
Merom 2	284*
Indianapolis Power & Light	
Petersburg 3	287*
Kansas City Power & Light	
Hawthorn 3	296*
Hawthorn 4	307*
LaCygne 1	319*
Kansas Power & Light	
Jeffrey 1	342*
Jeffrey 2	349*
Lawrence 4	354*
Lawrence 5	366*
Kentucky Utilities	
Green River 1-3	377*
Louisville Gas & Electric	
Cane Run 4	387*
Cane Run 5	397*
Cane Run 6	406*
Mill Creek 1	413*
Mill Creek 2	418*
Mill Creek 3	422*
Paddy's Run 6	430*
Minnesota Power & Light	
Clay Boswell 4	442*
Minnkota Power	
Milton R. Young 2	449*
Monongahela Power	
Pleasants 1	463*
Pleasants 2	469*
Montana Power	
Colstrip 1	474*
Colstrip 2	482*

*Section 3, pages 47-851, appear in Volume II.

CONTENTS (continued)

	Page
Montana-Dakota Utilities	
Coyote 1	490*
Nevada Power	
Reid Gardner 1	493*
Reid Gardner 2	509*
Reid Gardner 3	528*
Northern Indiana Public Service	
Dean H. Mitchell 11	543*
Northern States Power	
Riverside 6-7	555*
Sherburne 1	560*
Sherburne 2	578*
Pacific Power & Light	
Jim Bridger 4	592*
Pennsylvania Power	
Bruce Mansfield 1	598*
Bruce Mansfield 2	612*
Bruce Mansfield 3	621*
Public Service Company of New Mexico	
San Juan 1	626*
San Juan 2	637*
San Juan 3	649*
Salt River Project	
Coronado 1	656*
Coronado 2	662*
San Miguel Electric	
San Miguel 1	667*
Sikeston Board of Municipal Utilities	
Sikeston 1	671*
South Carolina Public Service Authority	
Winyah 2	675*
Winyah 3	684*
Winyah 4	690*
South Mississippi Electric	
R.D. Morrow, Sr. 1	693*
R.D. Morrow, Sr. 2	702*
Southern Illinois Power Coop	
Marion 4	710*
Southern Indiana Gas & Electric	
A.B. Brown 1	719*
Springfield City Utilities	
Southwest 1	729*
Springfield Water, Light & Power	
Dallman 3	745*
St. Joe Zinc	
G.F. Weaton 1	753*

*Section 3, pages 47-851, appear in Volume II.

CONTENTS (continued)

		Page
	Tennessee Valley Authority	
	Shawnee 10A	760*
	Shawnee 10B	763*
	Widows Creek 7	782*
	Widows Creek 8	786*
	Texas Power & Light	
	Sandow 4	801*
	Texas Utilities	
	Martin Lake 1	805*
	Martin Lake 2	813*
	Martin Lake 3	820*
	Monticello 3	826*
	Utah Power & Light	
	Hunter 1	833*
	Hunter 2	838*
	Huntington 1	842*
	Naughton 3	849*
Section 4	Summary of FGD Systems by Company	852
Section 5	Summary of FGD Systems by System Supplier	854
Section 6	Summary of FGD Systems by Process	856
Section 7	Summary of Operating FGD Systems by Process and Unit	857
Section 8	Summary of End-Product Disposal Practices for Operational FGD Systems	860
Section 9	Summary of FGD Systems in Operation	862
Section 10	Summary of FGD Systems Under Construction	867
Section 11	Summary of Contract Awarded FGD Systems	869
Section 12	Summary of Planned FGD Systems	870
Section 13	Total FGD Units and Capacity (MW) Installed by Year	874
Section 14	Design and Performance Data for Operational Particle Scrubbers	875
	Commonwealth Edison	
	Will County 1	875

*Section 3, pages 47-851, appear in Volume II.

CONTENTS (continued)

		Page
	Detroit Edison	
	St. Clair 6	901
	Minnesota Power and Light	
	Clay Boswell 3	910
	Syl Laskin 1	913
	Syl Laskin 2	917
	Montana-Dakota Utilities	
	Lewis & Clark 1	921
	Pacific Power and Light	
	Dave Johnston 4	925
	Potomac Electric Power	
	Dickerson 1	928
	Dickerson 2	931
	Dickerson 3	934
	Public Service of Colorado	
	Arapahoe 4	941
	Cherokee 1	945
	Cherokee 4	948
	Valmont 5	951
	Southwestern Public Service	
	Harrington 1	958
Section 15	Design and Performance Data for Operational Foreign FGD Systems	962
	Chugoku Electric	
	Shimonoseki 1	962
	Electric Power Development Company	
	Isogo 1	967
	Isogo 2	973
	Takasago 1	979
	Takasago 2	987
	Takehara 1	994
	Hokkaido Electric Power	
	Tomakomai Thermal	999
Section 16	Design and Performance Data for Discontinued Domestic FGD Systems	1002
	Arizona Public Service	
	Four Corners 5A	1002
	Boston Edison	
	Mystic 6	1006
	Commonwealth Edison	
	Will County 1A	1010
	Dairyland Power Coop	
	Alma 5	1014

CONTENTS (continued)

		Page
	Detroit Edison	
	St. Clair 6A	1017
	Gulf Power	
	Scholz 1	1021
	Scholz 1A	1025
	Scholz 1B, 2B	1030
	Scholz 1, 2	1035
	Scholz 2A	1039
	Illinois Power Company	
	Wood River 4	1043
	Key West Utility Board	
	Stock Island 1	1047
	Philadelphia Electric	
	Eddystone 1A	1051
	Potomac Electric Power	
	Dickerson 3A	1060
	Public Service of Colorado	
	Valmont 5A	1063
	Southern California Edison	
	Mohave 1A	1066
	Mohave 2A	1069
	Tennessee Valley Authority	
	Shawnee 10C	1072
	Union Electric	
	Meremac 2	1075
Appendix A	FGD System Cost Data: Operational and Nonoperational Systems	A-1
	Introduction	A-2
	Results of the Cost Analysis	A-6
	Adjustment Procedure and Background	A-9
	Costs for Operational FGD Systems	A-21
	Costs for Nonoperational FGD Systems	A-33
Appendix B	Definitions	B-1
Appendix C	Table of Unit Notation	C-1
Appendix D	FGD Process Flow Diagrams	D-1

TABLES

No.		Page
I	Number and Total Capacity of FGD Systems	xii
II	Summary of Changes, October-December 1981	xiv
III	Performance of Operational Units, October-December 1981	xv

FIGURE

No.		Page
1	Computerized Data Base Structure Diagram	xiii

EXECUTIVE SUMMARY

This report is prepared quarterly (every three months) by PEDCo Environmental, Inc., under contract to the Industrial Environmental Research Laboratory/Research Triangle Park of the U.S. Environmental Protection Agency. It is generated by a computerized data base system, the structure of which is illustrated in Figure 1.

Table 1 summarizes the status of FGD systems in the United States at the end of December 1981. Table 2 lists the units that have changed status during the fourth quarter 1981, and Table 3 shows the performance of operating units during this period.

TABLE 1. NUMBER AND TOTAL CAPACITY OF FGD SYSTEMS

Status	No. of units	Total controlled capacity, MW*	Equivalent scrubbed capacity, MW†
Operational	94	35,931	32,683
Under construction	40	17,386	16,666
Planned:			
Contract awarded	17	10,035	9,819
Letter of intent	10	7,643	7,585
Requesting/evaluating bids	10	5,630	5,630
Considering only FGD systems	51	30,726	30,398
TOTAL	222	107,351	102,781

* The summation of the gross unit capacities (MW) brought into compliance with FGD systems regardless of the percent of the flue gas scrubbed by the FGD system(s).

† The summation of the effective scrubbed flue gas in equivalent MW based on the percent of flue gas scrubbed by the FGD system(s).

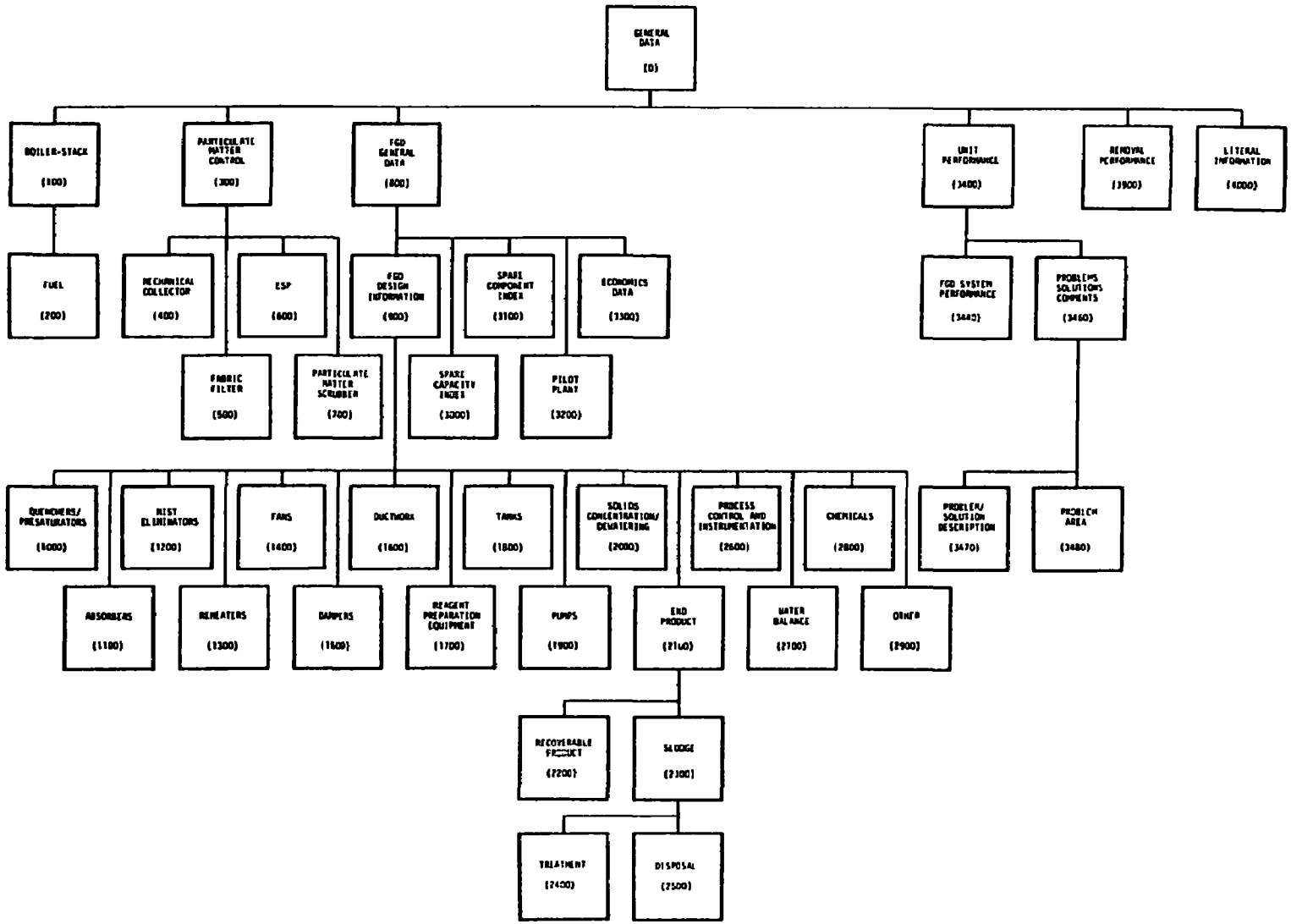

Figure 1. Computerized data base structure diagram.

TABLE 2. SUMMARY OF CHANGES OCTOBER - DECEMBER 1981

FGD status report September 31, 1981	Operational		Under construction		Contract awarded		Letter of intent		Requesting/ eval. bids		Considering FGD		Total	
	No.	MW[a]	No.	MW[a]	No.	MW[a]	No.	MW[a]	No.	MW[a]	No.	MW[a]	No.	MW[a]
	92	31,892[b]	42	17,457	16	9,169	11	8,235	10	5,630	51	30,398	222	102,781[b]
East Kentucky Power J.K. Smith 1					+1	650	-1	650						
Louisville Gas & Electric Mill Creek 2	+1	350	-1	350										
Hoosier Energy Merom 2	+1	441	-1	441										
Total	94	32,683	40	16,666	17	9,819	10	7,585	10	5,630	51	30,398	222	102,781

[a] Equivalent scrubbed capacity.

[b] This value was modified slightly due to a MW correction.

(continued)

TABLE 3. PERFORMANCE OF OPERATIONAL UNITS OCTOBER-DECEMBER 1981

Plant	FGD system capacity, MW[a]	Flue gas % scrubbed	FGD capacity on line during period MW[a,b]	No information for this period, MW[a]	Shut down throughout period, MW[a]	October 1981 Dependability %[c,e]				November 1981 Dependability %[c,e]				December 1981 Dependability %[c,e]			
						AVL	OPR	REL	UTL	AVL	OPR	REL	UTL	AVL	OPR	REL	UTL
Alabama Electric																	
Tombigbee 2	179	70	179			17	52	52	9	41	79	79	36	100	54	54	54
Tombigbee 3	179	70	179			97	58	58	57	99	76	76	59	96	52	52	52
Arizona Electric Power																	
Apache 2	98	50	98			100	100	100	42	65	64	65	64				
Apache 3	98	50	98			96	98	96	96	100	100	89	89				
Arizona Public Service																	
Cholla 1	119	100		119													
Cholla 2	264	100		264													
Cholla 4	126	33		126													
Four Corners 1	175	100		175													
Four Corners 2	175	100		175													
Four Corners 3	229	100		229													
Basin Electric Power																	
Laramie River 1	570	100	570			100			0	100	63	100	59	100	78	100	78
Laramie River 2	570	100	570			100	96	100	95	100	98	100	98	100	93	100	75
Big Rivers Electric																	
Green 1	242	100	242			75	98	98	75	96	95	95	95	99	98	97	98
Green 2	242	100	242			76	96	96	73	63	87	87	45	100	98	98	87
Central Illinois Light																	
Duck Creek 1	416	100	416			0			0	31	79	91	26	80	82	83	69
Central Illinois Public Service																	
Newton 1	617	100	617			100	0	0	0	98	69	85	69	100	85	100	82
Cincinnati Gas & Electric																	
East Bend 2	650	100	650														
Colorado Ute Electric																	
Craig 1	410	90	410			14	14	14	14	80	80	80	80	84	84	84	84
Craig 2	410	90	410			100	99	99	99	21	47	52	21	69	69	70	68
Columbus & Southern Ohio Electric																	
Conesville 5	411	100	411			100	0	0	0	27	0	0	0	84	82	86	77
Conesville 6	411	100	411			100	0	0	0	27	0	0	0	88	83	93	66

(continued)

TABLE 3 (continued)

Plant	FGD system capacity, MW[a]	Flue gas % scrubbed	FGD capacity on line during period MW[a,b]	No information for this period, MW[a]	Shut down throughout period, MW[a]	October 1981 Dependability %[c,e]				November 1981 Dependability %[c,e]				December 1981 Dependability %[c,e]			
						AVL	OPR	REL	UTL	AVL	OPR	REL	UTL	AVL	OPR	REL	UTL
Commonwealth Edison																	
Powerton 51	450	100	450						0								32
Cooperative Power Association																	
Coal Creek 1	327	60	327				54		15		57		47		60		45
Coal Creek 2	327	60	327				76		76		67		67		67		67
Delmarva Power & Light																	
Delaware City 1	60	100	60			30	57	71	23	70	70	70	70	73	68	68	59
Delaware City 2	60	100	60			100	100	100	100	89	89	89	89	99	99	99	99
Delaware City 3	60	100	60			78	86	86	78	42	89	89	42	95	95	95	95
Duquesne Light																	
Elrama 1-4	510	100	510			95	77	94	77	100	77	100	77	100	60	100	60
Phillips 1-6	408	100	408			85	59	83	59	74	41	72	41	73	49	73	49
Hoosier Energy																	
Merom 2	441	90	441														
Indianapolis Power & Light																	
Petersburg 3	532	100		532													
Kansas City Power & Light																	
Hawthorn 3	90	100		90													
Hawthorn 4	90	100		90													
La Cygne 1	874	100	874			51	98	98	35	94	100	92	72				
Kansas Power & Light																	
Jeffrey 1	540	75	540														
Jeffrey 2	490	70	490														
Lawrence 4	125	100	125														
Lawrence 5	420	100	420														
Kentucky Utilities																	
Green River 1-3	64	100			64	100			0	100			0	100			0
Louisville Gas & Electric																	
Cane Run 4	188	100	188			65	93	93	65	99	100	100	99	65	100	100	65
Cane Run 5	200	100	200			93	100	100	58	89	100	100	57	99	99	99	99
Cane Run 6	299	100			299	100			0	100			0	100			0
Mill Creek 1	358	100	358			40	41	41	40	37	40	40	37	26	29	29	26
Mill Creek 2	350	100	350											100	75	75	100
Mill Creek 3	427	100	427			41	90	90	41	32	37	37	32	41	43	43	41
Paddy's Run 6	72	100			72	100			0	100			0	100			0
Minnesota Power & Light																	
Clay Boswell 4	475	85	475			100	95	100	95	94	96	100	73	100	90	100	90

(continued)

TABLE 3 (continued)

Plant	FGD system capacity, MW[a]	Flue gas % scrubbed	FGD capacity on line during period MW[a,b]	No information for this period, MW[a]	Shut down throughout period, MW[a]	October 1981 Dependability %[c,e]				November 1981 Dependability %[c,e]				December 1981 Dependability %[c,e]			
						AVL	OPR	REL	UTL	AVL	OPR	REL	UTL	AVL	OPR	REL	UTL
Minnkota Power																	
Milton R. Young 2	185	42	185			100	100	100	66	100	98	99	89	100	100	100	100
Monongahela Power																	
Pleasants 1	668	100		668													
Pleasants 2	668	100		668													
Montana Power																	
Colstrip 1	360	100	360			98				93				97			
Colstrip 2	360	100	360			98				93				96			
Montana-Dakota Utilities																	
Coyote 1	440	100		440													
Nevada Power																	
Reid Gardner 1	125	100	125			0			0	95	78	61	9	100	96	96	100
Reid Gardner 2	125	100	125			100	99	99	86	100	100	100	47	95	74	69	56
Reid Gardner 3	125	100	125			100	99	99	94	98	98	98	98	99	98	97	49
Northern Indiana Public Service																	
Dean H. Mitchell 11	115	99			115	100	0		0	100	0		0	100	0		0
Northern States Power																	
Riverside 6-7	110	100		110													
Sherburne 1	740	100	740			100	100	100	92	100	100	100	95	100	100	100	100
Sherburne 2	740	100	740			100	100	100	100	100	100	100	100	100	100	100	100
Pacific Power & Light																	
Jim Bridger 4	550	100		550													
Pennsylvania Power																	
Bruce Mansfield 1	917	100	917			100				98				99			
Bruce Mansfield 2	917	100	917			98				94				95			
Bruce Mansfield 3	917	100	917			99				100				100			
Public Service of New Mexico																	
San Juan 1	361	100	361			100	96	100	96	100	95	100	81	99	78	100	25
San Juan 2	350	100	350			65	62	67	45	93	71	90	59	95	89	95	89
San Juan 3	534	100	534			98	84	97	62	94	90	93	89	100	92	98	89
Salt River Project																	
Coronado 1	280	80	280														
Coronado 2	280	80	280														
San Miguel Electric																	
San Miguel 1	400	100	400														

(continued)

TABLE 3 (continued)

Plant	FGD system capacity, MW[a]	Flue gas % scrubbed	FGD capacity on line during period MW[a,b]	No information for this period, MW[a]	Shut down throughout period, MW[a]	October 1981 Dependability %[c,e]				November 1981 Dependability %[c,e]				December 1981 Dependability %[c,e]			
						AVL	OPR	REL	UTL	AVL	OPR	REL	UTL	AVL	OPR	REL	UTL
Sikeston Board of Municipal Utilities																	
Sikeston 1	235	100	235														
South Carolina Public Service																	
Winyah 2	140	50	140			32	71	72	30	82	88	88	82	81	82	81	65
Winyah 3	280	100	280			96	96	97	96	96	94	95	84	97	97	97	97
Winyah 4	280	100	280							52	53	54	52				
South Mississippi Electric Power																	
R.D. Morrow, Sr. 1	124	62	124			75	99	99	72	100	99	99	98	100	100	100	100
R.D. Morrow, Sr. 2	124	62	124			100	100	100	100	32	99	99	32	100	99	99	94
Southern Illinois Power																	
Marion 4	173	100		173													
Southern Indiana Gas & Electric																	
A.B. Brown 1	265	100	265			98	94	94	84	93	91	91	91	98	63	63	38
Springfield City Utilities																	
Southwest 1	194	100	194			47	87	98	45	0			0	78	82	96	66
Springfield Water, Light & Power																	
Dallman 3	185	90	185			94	68	84	53								
St. Joe Zinc																	
G.F Weaton 1	60	100	60			12	12	12	12	55	55	55	55	1	1	1	1
Tennessee Valley Authority																	
Shawnee 10A	10	N/A[d]		10													
Shawnee 10B	10	N/A[d]		10													
Widows Creek 7	575	100	575														
Widows Creek 8	550	100	550														
Texas Power & Light																	
Sandow 4	382	70		382													
Texas Utilities																	
Martin Lake 1	595	75		595													
Martin Lake 2	595	75		595													
Martin Lake 3	595	75		595													
Monticello 3	800	100		800													

(continued)

TABLE 3 (continued)

Plant	FGD system capacity, MW[a]	Flue gas % scrubbed	FGD capacity on line during period MW[a,b]	No information for this period, MW[a]	Shut down throughout period, MW[a]	October 1981 Dependability %[c,e]				November 1981 Dependability %[c,e]				December 1981 Dependability %[c,e]			
						AVL	OPR	REL	UTL	AVL	OPR	REL	UTL	AVL	OPR	REL	UTL
Utah Power & Light																	
Hunter 1	360	90		360													
Hunter 2	360	90		360													
Huntington 1	366	85		366													
Naughton 3	330	100		330													
TOTAL	32,683		23,321	8,812	550												

a Equivalent scrubbed capacity.
b This category includes the flue gas capacity being handled by the FGD system at least part of the time during the report period.
c The percent figures listed are average values for all system scrubbing trains during the period.
d Flue gas % scrubbed for prototype and demonstration units is not applicable unless the system is designed to bring a unit into compliance with SO_2 emission standard.
e Availability, operability, reliability, and utilization as defined in Appendix C of this report.

Current projections indicate that the total power generating capacity of the U.S. electric utility industry will be approximately 831 GW by the end of 1999. (This value reflects the annual loss resulting from the retirement of older units, which is considered to be 0.4% of the average generating capacity at the end of each year.[1,2]) Approximately 373 GW or 45% of the 1999 total will come from coal-fired units. The distribution of power generation sources, both present (December 1980) and future (December 1999) is shown in Table 4.[1]

TABLE 4. POWER GENERATION SOURCES: PRESENT AND FUTURE

	Coal	Nuclear	Oil	Hydro	Gas	Other	GW (total)
December 1980	41%	10%	24%	12%	12%	1%	616
December 1999	45%	15%	19%	11%	9%	1%	831

Based on the known commitments to FGD by utilities as presented in Table 1, the percentage of electrical generating capacity controlled by FGD for both the present (December 1981) and the future (December 1999) is shown in Table 5.

TABLE 5. FGD CONTROLLED GENERATING CAPACITY: PRESENT AND FUTURE

	Coal-fired generating capacity controlled by FGD, %	Total generating capacity controlled by FGD, %
December 1981*	14.2	5.8
December 1999	28.7	12.9

*The number of committed FGD systems is as of December 1981; however, the figure used for the total generating capacity and coal-fired generating capacity is based on the available December 1980 figures.

In light of the revised New Source Performance Standards, actual FGD control is expected to be greater than what is reflected by the figures above. For example, about 50 to 60 systems representing approximately 29,000 to 31,000 MW of generating capacity presently fall into the uncommitted category. These are systems that cannot be included in the committed group at this time because information regarding their status is not ready for public release.

In an effort to show general FGD usage and projected usage trends, Table 6 gives a current (December 1981) and a projected (December 1999) breakdown of throwaway product systems versus salable product systems as a percent of the total known commitments to FGD as of the end of the fourth quarter 1981:

TABLE 6. SUMMARY OF FGD SYSTEMS BY PROCESS

		Percent of total MW		
		December 1981	December 1999 (Projected)[b]	December 1999 (Normalized)[c]
Throwaway product process				
°Wet systems				
Lime		38.1	13.0	23.1
Limestone		47.8	31.5	56.0
Dual alkali		3.6	1.2	2.1
Sodium carbonate		3.8	2.7	4.8
NA[a]		-	7.6	-
°Dry systems				
Lime		0.3	4.8	8.5
Lime/Sodium carbonate		-	0.1	0.2
Sodium carbonate		1.3	-	-
Salable product process				
°Process	°Byproduct			
Aqueous carbonate/ spray drying	Elemental sulfur	-	0.1	0.2
Citrate	Elemental sulfur	0.2	0.1	0.2
Lime	Gypsum	-	0.1	0.2
Limestone	Gypsum	-	0.2	0.4
Lime/limestone	Gypsum	-	0.7	1.2
Magnesium oxide	Sulfuric acid	-	1.0	1.8
Wellman Lord	Sulfuric acid	2.3	0.5	0.9
Wellman Lord	Elemental sulfur	2.6	0.2	0.4
Process undecided		-	36.2	-
Total		100.0	100.0	100.0

[a]NA - Not available (these systems are committed to a throwaway product process; however, the actual process is unknown at this time).

[b]These values are based solely on information actually reported by utilities. This breakdown could change significantly as specific processes are chosen for plants now in the very early planning stages of development.

[c]The effect of those systems listed as "NA" and "Process undecided" is removed.

HIGHLIGHTS: OCTOBER - DECEMBER 1981

The following paragraphs highlight FGD system developments during the fourth quarter 1981.

Alabama Electric announced that the Tombigbee 3 FGD system achieved availabilities of 97%, 99%, and 96% for the months of October, November, and December, respectively. No major FGD related problems were noted during the three-month period.

Arizona Electric Power reported that the Apache 3 FGD system achieved 96% and 100% availabilities for the months of October and November, respectively. Information for December was not available for this report.

Basin Electric Power reported availabilities of 100%, for the Laramie River 1 and 2 FGD systems during the months of October, November and December. No major FGD-related problems were encountered during the fourth quarter.

Big Rivers Electric reported that the Green 1 FGD system achieved 96% and 99% availabilities for the months of November and December, respectively. Operations at the beginning of the fourth quarter were restricted due to piping and damper problems.

The Newton 1 FGD system of Central Illinois Public Service achieved availabilities of 100%, 98%, and 100% for the months of October, November and December. No major FGD-related problems were encountered during the fourth quarter.

Delmarva Power & Light announced that the FGD system installed on Delaware 2 achieved availabilities of 100%, 89%, and 99% during the fourth quarter. Some ESP and presaturator problems were noted during the three-month period.

Duquesne Light reported that the FGD system installed at Elrama achieved 95%, 100%, and 100% availabilities for the months of October, November, and December, respectively. During the period the recycle pumps of one of the five modules were replaced. Due to the spare capacity, the system operation was not hindered.

East Kentucky Power announced that a contract has been awarded to Babcock & Wilcox for the installation of a lime FGD system to control SO_2 emissions from J.K. Smith 1. This new unit will be rated at 650 MW (gross) and will fire coal with an average sulfur content of 1.5%. FGD systems startup is scheduled for August 1987.

The Merom 2 FGD system of Hoosier Energy began initial operations on December 30. Merom 2 is rated at 490 MW (gross) and fires coal with an average sulfur content of 3.50%. The limestone FGD system, which was supplied by Mitsubishi Heavy Industries, consists of a cold-side ESP upstream of a grid tower absorber. The scrubbed gas is heated by a flue gas bypass before exiting a 700-foot stack.

Louisville Gas & Electric reported availabilities of 93%, 89%, and 99% for the Cane Run 5 FGD system during the months of October, November, and December, respectively. No major FGD-related problems were encountered during the three-month period.

Initial operations of the Mill Creek 2 FGD system of Louisville Gas & Electric began during December. Mill Creek 2 is rated at 350 MW (gross) and fires coal with an average sulfur content of 3.75%. The lime FGD system, which was supplied by Combustion Engineering, consists of two absorber modules. Two hot side ESP's are included for primary particle removal. Availability of the FGD system during the month of December was 100%.

Minnesota Power & Light reported availabilities of 100%, 94%, and 100% for the Clay Boswell 4 FGD system during the months of October, November, and December, respectively. No major FGD-related problems were encountered during this period.

Minnkota Power announced that the FGD system installed on Milton R. Young 2 achieved 100% availability for the months of October, November and December. No FGD-related problems were reported for the three-month period.

Nevada Power reported that the Reid Gardner 1 FGD system achieved 95% and 100% availabilities for the months of November and December, respectively. The system was not available during October due to scheduled scrubber/boiler overhaul. The Reid Gardner 2 FGD system achieved 100%, 100% and 95% availabilities for the same three-month period. The Reid Gardner 3 FGD system achieved availabilities of 100%, 98%, and 99% during the three-months with only minor problems being encountered.

The Sherburne 1 and 2 FGD systems of Northern States Power achieved 100% availability during the months of October, November, and December. No FGD-related problems were encountered during the three-month period.

Pennsylvania Power reported availabilities of 100%, 98%, and 99% for the Bruce Mansfield 1 FGD system during the months of October, November, and December, respectively. Bruce Mansfield 2 achieved availabilities of 98%, 94%, and 95% during the same three-month period. Bruce Mansfield 3 achieved availabilities of 99%, 100%, and 100% during the same period. Some minor ID fan problems and general maintenance were encountered.

Public Service Company of New Mexico reported that the San Juan 1 FGD system achieved availabilities of 100%, 100%, and 97% during the months of October, November, and December, respectively. San Juan 2 achieved 93% and 95% availabilities for the months of November and December, respectively. Low availability in October resulted from necessary mist eliminator maintenance. San Juan 3 achieved availabilities of 98%, 94%, and 100% during the same three-month period. Operation of an additional module on San Juan 3 commenced during the period.

South Carolina Public Service reported that the Winyah 3 FGD system achieved availabilities of 96%, 96%, and 97% for the months of October, November, and December, respectively. Some absorber pump problems were reported during the period.

Southern Indiana Gas & Electric reported availabilities of 98%, 93%, and 98% for the A.B. Brown 1 FGD system during the months of October, November, and December, respectively. Some damper problems were noted throughout the three-month period.

South Mississippi Electric Power reported availabilities of 100% for the R.D. Morrow 1 FGD system during the months of November and December. Low availability for October was due to a scrubber duct inspection.

References

1. U.S. Department of Energy. Energy Information Administration. Office of Coal and Electric Power Statistics. Electric Power Statistics Division. Inventory of Power Plants in the United States, 1980 Annual. Publ. No. DOE/EIA-0095 (80).

2. Berman, Ira M. New Generating Capacity: When, Where, and by Whom. Power Engineering 85(4)72. April 1981.

SECTION 1
SUMMARY LIST OF FGD SYSTEMS

COMPANY NAME/ UNIT NAME	UNIT NO.	UNIT LOCATION		START-UP DATE	STATUS	REG CLASS
ALABAMA ELECTRIC						
TOMBIGBEE	2	LEROY	ALABAMA	9/78	1	B
TOMBIGBEE	3	LEROY	ALABAMA	6/79	1	B
ARIZONA ELECTRIC POWER						
APACHE	2	COCHISE	ARIZONA	8/78	1	D
APACHE	3	COCHISE	ARIZONA	6/79	1	D
ARIZONA PUBLIC SERVICE						
CHOLLA	1	JOSEPH CITY	ARIZONA	10/73	1	C
CHOLLA	2	JOSEPH CITY	ARIZONA	4/78	1	C
CHOLLA	4	JOSEPH CITY	ARIZONA	3/81	1	C
FOUR CORNERS	1	FARMINGTON	NEW MEXICO	11/79	1	C
FOUR CORNERS	2	FARMINGTON	NEW MEXICO	11/79	1	C
FOUR CORNERS	3	FARMINGTON	NEW MEXICO	11/79	1	C
FOUR CORNERS	4	FARMINGTON	NEW MEXICO	12/84	2	C
FOUR CORNERS	5	FARMINGTON	NEW MEXICO	12/84	2	C
ASSOCIATED ELECTRIC						
THOMAS HILL	3	MOBERLY	MISSOURI	1/82	2	A
ATLANTIC CITY ELECTRIC						
CUMBERLAND	1	MILLVILLE	NEW JERSEY	1/88	6	C
BASIN ELECTRIC POWER						
ANTELOPE VALLEY	1	BEULAH	NORTH DAKOTA	10/83	2	D
ANTELOPE VALLEY	2	BEULAH	NORTH DAKOTA	10/85	2	C
LARAMIE RIVER	1	WHEATLAND	WYOMING	7/80	1	C
LARAMIE RIVER	2	WHEATLAND	WYOMING	7/81	1	C
LARAMIE RIVER	3	WHEATLAND	WYOMING	11/82	2	C
BIG RIVERS ELECTRIC						
D.B. WILSON	1	CENTERTOWN	KENTUCKY	7/84	2	A
D.B. WILSON	2	CENTERTOWN	KENTUCKY	0/ 0	3	A
GREEN	1	SEBREE	KENTUCKY	12/79	1	B
GREEN	2	SEBREE	KENTUCKY	11/80	1	B
CAJUN ELECTRIC POWER						
CHICOT	1	COUSHATTA	LOUISIANA	0/86	6	A
CHICOT	2	COUSHATTA	LOUISIANA	0/88	6	A
CHICOT	3	COUSHATTA	LOUISIANA	0/92	6	A
CHICOT	4	COUSHATTA	LOUISIANA	0/94	6	A
OXBOW	1	DE SOTO PARISH	LOUISIANA	0/85	5	A
OXBOW	2	COSHATTA	LOUISIANA	0/85	6	A
CENTRAL ILLINOIS LIGHT						
DUCK CREEK	1	CANTON	ILLINOIS	7/76	1	B
DUCK CREEK	2	CANTON	ILLINOIS	1/87	6	A
CENTRAL ILLINOIS PUBLIC SERV						
NEWTON	1	NEWTON	ILLINOIS	9/79	1	B
CENTRAL MAINE POWER						
SEARS ISLAND	1	PENOBSCOT BAY	MAINE	11/89	6	A

1. OPERATIONAL UNITS
2. UNITS UNDER CONSTRUCTION
3. PLANNED - CONTRACT AWARDED
4. PLANNED - LETTER OF INTENT SIGNED
5. PLANNED - REQUESTING/EVALUATING BIDS
6. PLANNED - CONSIDERING ONLY FGD SYSTEMS
7. PLANNED - CONSIDERING FGD SYSTEMS; ALSO ALTERNATIVE METHODS

A. FEDERAL NSPS(6/79)
B. FEDERAL NSPS(12/71)
C. STANDARD(S) MORE STRINGENT THAN NSPS(6/79)
D. STANDARD(S) MORE STRINGENT THAN NSPS(12/71) BUT NOT MORE STRINGENT THAN NSPS(6/79)
E. STANDARD(S) EQUAL TO OR LESS STRINGENT THAN NSPS(12/71)

SECTION 1
SUMMARY LIST OF FGD SYSTEMS

COMPANY NAME/ UNIT NAME	UNIT NO.	UNIT LOCATION		START-UP DATE	STATUS	PEG CLASS
CENTRAL POWER & LIGHT						
COLETO CREEK	2	FANNIN	TEXAS	9/92	6	A
CINCINNATI GAS & ELECTRIC						
EAST BEND	1	RABBITHASH	KENTUCKY	0/88	6	
EAST BEND	2	RABBITHASH	KENTUCKY	3/81	1	B
COLORADO UTE ELECTRIC						
CRAIG	1	CRAIG	COLORADO	10/80	1	D
CRAIG	2	CRAIG	COLORADO	12/79	1	D
CRAIG	3	CRAIG	COLORADO	4/83	2	D
COLUMBUS & SOUTHERN OHIO ELEC						
CONESVILLE	5	CONESVILLE	OHIO	1/77	1	D
CONESVILLE	6	CONESVILLE	OHIO	6/78	1	D
POSTON	5	NELSONVILLE	OHIO	8/86	6	D
POSTON	6	NELSONVILLE	OHIO	0/89	6	D
COMMONWEALTH EDISON						
POWERTON	51	PEKIN	ILLINOIS	4/80	1	E
COOPERATIVE POWER ASSOCIATION						
COAL CREEK	1	UNDERWOOD	NORTH DAKOTA	7/79	1	B
COAL CREEK	2	UNDERWOOD	NORTH DAKOTA	7/80	1	B
DELMARVA POWER & LIGHT						
DELAWARE CITY	1	DELAWARE CITY	DELAWARE	5/80	1	E
DELAWARE CITY	2	DELAWARE CITY	DELAWARE	5/80	1	E
DELAWARE CITY	3	DELAWARE CITY	DELAWARE	5/80	1	E
VIENNA	9	VIENNA	MARYLAND	5/90	6	A
DESERET GEN & TRANS						
BONANZA	1	VERNAL	UTAH	9/84	2	A
BONANZA	2	VERNAL	UTAH	0/88	5	A
DUQUESNE LIGHT						
ELRAMA	1-4	ELRAMA	PENNSYLVANIA	10/75	1	D
PHILLIPS	1-6	SOUTH HEIGHT	PENNSYLVANIA	7/73	1	D
EAST KENTUCKY POWER						
J.K. SMITH	1	WINCHESTER	KENTUCKY	8/87	3	A
SPURLOCK	2	MAYSVILLE	KENTUCKY	1/83	2	B
FLORIDA POWER & LIGHT						
MARTIN	3	MARTIN COUNTY	FLORIDA	0/87	6	A
MARTIN	4	MARTIN COUNTY	FLORIDA	0/89	6	A
GENERAL PUBLIC UTILITIES						
COAL	1	UNDECIDED	UNDECIDED	5/91	5	A
COAL	2	UNDECIDED	UNDECIDED	5/93	6	A
COAL	3	UNDECIDED	UNDECIDED	5/95	6	A
COAL	4	UNDECIDED	UNDECIDED	5/96	6	A
SEWARD	7	EAST WHEATFIELD	PENNSYLVANIA	5/89	5	A

1. OPERATIONAL UNITS
2. UNITS UNDER CONSTRUCTION
3. PLANNED - CONTRACT AWARDED
4. PLANNED - LETTER OF INTENT SIGNED
5. PLANNED - REQUESTING/EVALUATING BIDS
6. PLANNED - CONSIDERING ONLY FGD SYSTEMS
7. PLANNED - CONSIDERING FGD SYSTEMS; ALSO ALTERNATIVE METHODS

A. FEDERAL NSPS(6/79)
B. FEDERAL NSPS(12/71)
C. STANDARD(S) MORE STRINGENT THAN NSPS(6/79)
D. STANDARD(S) MORE STRINGENT THAN NSPS(12/71) BUT NOT MORE STRINGENT THAN NSPS(6/79)
E. STANDARD(S) EQUAL TO OR LESS STRINGENT THAN NSPS(12/71)

SECTION 1
SUMMARY LIST OF FGD SYSTEMS

COMPANY NAME/ UNIT NAME	UNIT NO.	UNIT LOCATION		START-UP DATE	STATUS	REG CLASS
GRAND HAVEN BRD OF LIGHT & PWR						
J.B. SIMS	3	GRAND HAVEN	MICHIGAN	1/83	2	A
HOOSIER ENERGY						
MEROM	1	MEROM	INDIANA	5/82	2	B
MEROM	2	MEROM	INDIANA	12/81	1	B
HOUSTON LIGHTING & POWER						
LIMESTONE	1	JEWETT	TEXAS	12/86	3	A
LIMESTONE	2	JEWETT	TEXAS	12/87	3	A
W.A. PARISH	8	BOOTH	TEXAS	11/82	2	A
INDIANAPOLIS POWER & LIGHT						
PATRIOT	1	PATRIOT	INDIANA	0/87	6	C
PATRIOT	2	PATRIOT	INDIANA	0/ 0	6	C
PATRIOT	3	PATRIOT	INDIANA	0/ 0	6	C
PETERSBURG	3	PETERSBURG	INDIANA	12/77	1	B
PETERSBURG	4	PETERSBURG	INDIANA	10/84	2	B
IOWA ELECTRIC LIGHT & PWR						
GUTHRIE CO.	1	PANORA	IOWA	11/87	4	A
JACKSONVILLE ELEC AUTHORITY						
ST.JOHNS RIVER PWR PARK	1	EAST PORT SITE	FLORIDA	12/85	5	A
ST.JOHNS RIVER PWR PARK	2	EAST PORT SITE	FLORIDA	6/87	5	A
KANSAS CITY POWER & LIGHT						
HAWTHORN	3	KANSAS CITY	MISSOURI	11/72	1	D
HAWTHORN	4	KANSAS CITY	MISSOURI	8/72	1	D
LA CYGNE	1	LA CYGNE	KANSAS	2/73	1	E
KANSAS POWER & LIGHT						
JEFFREY	1	WAMEGO	KANSAS	8/78	1	D
JEFFREY	2	WAMEGO	KANSAS	1/80	1	D
LAWRENCE	4	LAWRENCE	KANSAS	1/77	1	D
LAWRENCE	5	LAWRENCE	KANSAS	4/78	1	D
KENTUCKY UTILITIES						
GREEN RIVER	1-3	CENTRAL CITY	KENTUCKY	9/75	1	E
HANCOCK	1	HAWESVILLE	KENTUCKY	4/89	4	A
HANCOCK	2	HAWESVILLE	KENTUCKY	4/94	6	A
LAKELAND UTILITIES						
MCINTOSH	3	LAKELAND	FLORIDA	1/82	2	A
LANSING BOARD OF WATER & LIGHT						
ERICKSON	2	DELTA TOWNSHIP	MICHIGAN	1/87	6	C
LOS ANGELES DEPT OF WTR & PWR						
INTERMOUNTAIN	1	DELTA	UTAH	0/86	6	A
INTERMOUNTAIN	2	DELTA	UTAH	0/87	6	A
INTERMOUNTAIN	3	DELTA	UTAH	0/88	6	A
INTERMOUNTAIN	4	DELTA	UTAH	0/89	6	A

1. OPERATIONAL UNITS
2. UNITS UNDER CONSTRUCTION
3. PLANNED - CONTRACT AWARDED
4. PLANNED - LETTER OF INTENT SIGNED
5. PLANNED - REQUESTING/EVALUATING BIDS
6. PLANNED - CONSIDERING ONLY FGD SYSTEMS
7. PLANNED - CONSIDERING FGD SYSTEMS; ALSO ALTERNATIVE METHODS

A. FEDERAL NSPS(6/79)
B. FEDERAL NSPS(12/71)
C. STANDARD(S) MORE STRINGENT THAN NSPS(6/79)
D. STANDARD(S) MORE STRINGENT THAN NSPS(12/71) BUT NOT MORE STRINGENT THAN NSPS(6/79)
E. STANDARD(S) EQUAL TO OR LESS STRINGENT THAN NSPS(12/71)

SECTION 1
SUMMARY LIST OF FGD SYSTEMS

COMPANY NAME/ UNIT NAME	UNIT NO.	UNIT LOCATION		START-UP DATE	STATUS	REG CLASS
LOUISVILLE GAS & ELECTRIC						
CANE RUN	4	LOUISVILLE	KENTUCKY	8/76	1	D
CANE RUN	5	LOUISVILLE	KENTUCKY	12/77	1	D
CANE RUN	6	LOUISVILLE	KENTUCKY	4/79	1	D
MILL CREEK	1	LOUISVILLE	KENTUCKY	12/80	1	E
MILL CREEK	2	LOUISVILLE	KENTUCKY	12/81	1	E
MILL CREEK	3	LOUISVILLE	KENTUCKY	8/78	1	D
MILL CREEK	4	LOUISVILLE	KENTUCKY	6/82	2	B
PADDY'S RUN	6	LOUISVILLE	KENTUCKY	4/73	1	E
TRIMBLE COUNTY	1	BEDFORD	KENTUCKY	7/85	5	C
TRIMBLE COUNTY	2	BEDFORD	KENTUCKY	7/89	5	C
LOWER COLORADO RIVER AUTH						
FAYETTE POWER PROJECT	3	LA GRANGE	TEXAS	0/88	6	A
MARQUETTE BOARD OF LIGHT & PWR						
SHIRAS	3	MARQUETTE	MICHIGAN	9/82	2	A
MICHIGAN SO CENTRAL PWR AGENCY						
PROJECT	1	LITCHFIELD	MICHIGAN	6/82	2	A
MIDDLE SOUTH UTILITIES						
ARKANSAS LIGNITE	5		ARKANSAS	0/90	4	A
ARKANSAS LIGNITE	6		ARKANSAS	0/92	4	A
UNASSIGNED	1		LOUISIANA	0/89	4	A
UNASSIGNED	2		LOUISIANA	0/93	4	A
WILTON	1	CONVENT	LOUISIANA	0/83	4	A
WILTON	2	CONVENT	LOUISIANA	0/91	4	A
MINNESOTA POWER & LIGHT						
CLAY BOSWELL	4	COHASSET	MINNESOTA	4/80	1	A
MINNKOTA POWER						
MILTON R. YOUNG	2	CENTER	NORTH DAKOTA	9/77	1	D
MONONGAHELA POWER						
PLEASANTS	1	WILLOW ISLAND	WEST VIRGINIA	3/79	1	B
PLEASANTS	2	WILLOW ISLAND	WEST VIRGINIA	10/80	1	B
MONTANA POWER						
COLSTRIP	1	COLSTRIP	MONTANA	9/75	1	B
COLSTRIP	2	COLSTRIP	MONTANA	5/76	1	B
COLSTRIP	3	COLSTRIP	MONTANA	10/83	2	C
COLSTRIP	4	COLSTRIP	MONTANA	0/84	2	C
MONTANA-DAKOTA UTILITIES						
COYOTE	1	BEULAH	NORTH DAKOTA	4/81	1	E
MUSCATINE POWER & WATER						
MUSCATINE	9	MUSCATINE	IOWA	9/82	2	B
NEBRASKA PUBLIC POWER DISTRICT						
FOSSIL III	1	SARGENT	NEBRASKA	3/92	6	A

1. OPERATIONAL UNITS
2. UNITS UNDER CONSTRUCTION
3. PLANNED - CONTRACT AWARDED
4. PLANNED - LETTER OF INTENT SIGNED
5. PLANNED - REQUESTING/EVALUATING BIDS
6. PLANNED - CONSIDERING ONLY FGD SYSTEMS
7. PLANNED - CONSIDERING FGD SYSTEMS; ALSO ALTERNATIVE METHODS

A. FEDERAL NSPS(6/79)
B. FEDERAL NSPS(12/71)
C. STANDARD(S) MORE STRINGENT THAN NSPS(6/79)
D. STANDARD(S) MORE STRINGENT THAN NSPS(12/71) BUT NOT MORE STRINGENT THAN NSPS(6/79)
E. STANDARD(S) EQUAL TO OR LESS STRINGENT THAN NSPS(12/71)

SECTION 1
SUMMARY LIST OF FGD SYSTEMS

COMPANY NAME/ UNIT NAME	UNIT NO.	UNIT LOCATION		START-UP DATE	STATUS	REG CLASS
NEVADA POWER						
HARRY ALLEN	1	LAS VEGAS	NEVADA	6/86	6	A
HARRY ALLEN	2	LAS VEGAS	NEVADA	6/87	6	A
HARRY ALLEN	3	LAS VEGAS	NEVADA	6/88	6	A
HARRY ALLEN	4	LAS VEGAS	NEVADA	6/89	6	A
REID GARDNER	1	MOAPA	NEVADA	3/74	1	B
REID GARDNER	2	MOAPA	NEVADA	4/74	1	B
REID GARDNER	3	MOAPA	NEVADA	6/76	1	B
REID GARDNER	4	MOAPA	NEVADA	4/83	4	A
NEW YORK STATE ELEC & GAS						
SOMERSET	1	SOMERSET	NEW YORK	6/84	4	E
NIAGARA MOHAWK POWER						
CHARLES R. HUNTLEY	66	BUFFALO	NEW YORK	4/82	2	E
NORTHERN INDIANA PUB SERVICE						
DEAN H. MITCHELL	11	GARY	INDIANA	7/76	1	E
SCHAHFER	17	WHEATFIELD	INDIANA	6/83	2	A
SCHAHFER	18	WHEATFIELD	INDIANA	6/85	3	A
NORTHERN STATES POWER						
METRO COAL	1	UNDECIDED	UNDECIDED	0/90	6	A
RIVERSIDE	6-7	MINNEAPOLIS	MINNESOTA	11/80	1	E
SHERBURNE	1	BECKER	MINNESOTA	3/76	1	D
SHERBURNE	2	BECKER	MINNESOTA	3/77	1	D
SHERBURNE	3	BECKER	MINNESOTA	0/85	6	C
PACIFIC GAS & ELECTRIC						
MONTEZUMA	1	COLLINSVILLE	CALIFORNIA	6/93	6	C
MONTEZUMA	2	COLLINSVILLE	CALIFORNIA	6/94	6	C
PACIFIC POWER & LIGHT						
JIM BRIDGER	1	ROCK SPRINGS	WYOMING	0/88	6	A
JIM BRIDGER	2	ROCK SPRINGS	WYOMING	0/90	6	A
JIM BRIDGER	2A	ROCK SPRINGS	WYOMING	1/82	2	A
JIM BRIDGER	3	ROCK SPRINGS	WYOMING	0/86	6	A
JIM BRIDGER	4	ROCK SPRINGS	WYOMING	9/79	1	D
PENNSYLVANIA POWER						
BRUCE MANSFIELD	1	SHIPPINGPORT	PENNSYLVANIA	12/75	1	D
BRUCE MANSFIELD	2	SHIPPINGPORT	PENNSYLVANIA	7/77	1	D
BRUCE MANSFIELD	3	SHIPPINGPORT	PENNSYLVANIA	6/80	1	D
PHILADELPHIA ELECTRIC						
CROMBY	1	PHOENIXVILLE	PENNSYLVANIA	5/83	2	D
EDDYSTONE	1	EDDYSTONE	PENNSYLVANIA	12/82	2	D
EDDYSTONE	2	EDDYSTONE	PENNSYLVANIA	12/82	2	D
PLAINS ELECTRIC G & T						
PLAINS ESCALANTE	1	PREWITT	NEW MEXICO	12/83	2	B
PLATTE RIVER POWER AUTHORITY						
RAWHIDE	1	FT. COLLINS	COLORADO	12/83	3	C

1. OPERATIONAL UNITS
2. UNITS UNDER CONSTRUCTION
3. PLANNED - CONTRACT AWARDED
4. PLANNED - LETTER OF INTENT SIGNED
5. PLANNED - REQUESTING/EVALUATING BIDS
6. PLANNED - CONSIDERING ONLY FGD SYSTEMS
7. PLANNED - CONSIDERING FGD SYSTEMS; ALSO ALTERNATIVE METHODS

A. FEDERAL NSPS(6/79)
B. FEDERAL NSPS(12/71)
C. STANDARD(S) MORE STRINGENT THAN NSPS(6/79)
D. STANDARD(S) MORE STRINGENT THAN NSPS(12/71) BUT NOT MORE STRINGENT THAN NSPS(6/79)
E. STANDARD(S) EQUAL TO OR LESS STRINGENT THAN NSPS(12/71)

SECTION 1
SUMMARY LIST OF FGD SYSTEMS

COMPANY NAME/ UNIT NAME	UNIT NO.	UNIT LOCATION		START-UP DATE	STATUS	REG CLASS
PUBLIC SERVICE INDIANA						
GIBSON	5	PRINCETON	INDIANA	8/82	2	B
PUBLIC SERVICE OF NEW MEXICO						
SAN JUAN	1	WATERFLOW	NEW MEXICO	4/78	1	C
SAN JUAN	2	WATERFLOW	NEW MEXICO	8/78	1	C
SAN JUAN	3	WATERFLOW	NEW MEXICO	12/79	1	C
SAN JUAN	4	WATERFLOW	NEW MEXICO	6/82	2	C
PWR AUTHORITY OF STATE OF NY						
FOSSIL		NEW YORK	NEW YORK	4/87	6	C
SALT RIVER PROJECT						
CORONADO	1	ST. JOHNS	ARIZONA	11/79	1	D
CORONADO	2	ST. JOHNS	ARIZONA	7/80	1	D
CORONADO	3	ST. JOHNS	ARIZONA	0/89	6	A
SAN MIGUEL ELECTRIC						
SAN MIGUEL	1	SAN MIGUEL	TEXAS	8/81	1	B
SEMINOLE ELECTRIC						
SEMINOLE	1	PALATKA	FLORIDA	3/83	2	A
SEMINOLE	2	PALATKA	FLORIDA	1/85	3	A
SIERRA PACIFIC POWER						
VALMY	2	VALMY	NEVADA	8/84	7	A
SIKESTON BRD OF MUNICIPAL UTIL						
SIKESTON	1	SIKESTON	MISSOURI	6/81	1	B
SOUTH CAROLINA PUBLIC SERVICE						
CROSS	1	CROSS	SOUTH CAROLINA	5/88	3	A
CROSS	2	CROSS	SOUTH CAROLINA	11/83	2	A
WINYAH	2	GEORGETOWN	SOUTH CAROLINA	7/77	1	B
WINYAH	3	GEORGETOWN	SOUTH CAROLINA	5/80	1	B
WINYAH	4	GEORGETOWN	SOUTH CAROLINA	7/81	1	A
SOUTH MISSISSIPPI ELEC PWR						
R.D. MORROW, SR.	1	HATTIESBURG	MISSISSIPPI	8/78	1	B
R.D. MORROW, SR.	2	HATTIESBURG	MISSISSIPPI	6/79	1	B
SOUTHERN ILLINOIS POWER						
MARION	4	MARION	ILLINOIS	5/79	1	B
SOUTHERN INDIANA GAS & ELEC						
A.B. BROWN	1	WEST FRANKLIN	INDIANA	3/79	1	B
A.B. BROWN	2	WEST FRANKLIN	INDIANA	1/85	5	A
SOUTHWESTERN ELECTRIC POWER						
DOLET HILLS	1	MANSFIELD	LOUISIANA	3/86	3	A
DOLET HILLS	2	MANSFIELD	LOUISIANA	0/88	6	A
HENRY W. PIRKEY	1	HALLSVILLE	TEXAS	12/84	3	B
SOYLAND POWER						
SOYLAND	1	UNDECIDED	ILLINOIS	6/87	6	A

1. OPERATIONAL UNITS
2. UNITS UNDER CONSTRUCTION
3. PLANNED - CONTRACT AWARDED
4. PLANNED - LETTER OF INTENT SIGNED
5. PLANNED - REQUESTING/EVALUATING BIDS
6. PLANNED - CONSIDERING ONLY FGD SYSTEMS
7. PLANNED - CONSIDERING FGD SYSTEMS; ALSO ALTERNATIVE METHODS

A. FEDERAL NSPS(6/79)
B. FEDERAL NSPS(12/71)
C. STANDARD(S) MORE STRINGENT THAN NSPS(6/79)
D. STANDARD(S) MORE STRINGENT THAN NSPS(12/71) BUT NOT MORE STRINGENT THAN NSPS(6/79)
E. STANDARD(S) EQUAL TO OR LESS STRINGENT THAN NSPS(12/71)

SECTION 1
SUMMARY LIST OF FGD SYSTEMS

COMPANY NAME/ UNIT NAME	UNIT NO.	UNIT LOCATION		START-UP DATE	STATUS	REG CLASS
SPRINGFIELD CITY UTILITIES						
SOUTHWEST	1	SPRINGFIELD	MISSOURI	4/77	1	B
SPPINGFIELD WATER, LIGHT & PWR						
DALLMAN	3	SPRINGFIELD	ILLINOIS	12/80	1	B
ST. JOE ZINC						
G.F. WEATON	1	MONACA	PENNSYLVANIA	11/79	1	B
SUNFLOWER ELECTRIC						
HOLCOMB	1	HOLCOMB	KANSAS	9/83	2	A
TAMPA ELECTRIC						
BIG BEND	4	TAMPA	FLORIDA	3/85	3	A
TENNESSEE VALLEY AUTHORITY						
PARADISE	1	PARADISE	KENTUCKY	0/83	2	E
PARADISE	2	PARADISE	KENTUCKY	0/83	2	E
SHAWNEE	10A	PADUCAH	KENTUCKY	4/72	1	E
SHAWNEE	10B	PADUCAH	KENTUCKY	4/72	1	E
WIDOWS CREEK	7	BRIDGEPORT	ALABAMA	3/81	1	E
WIDOWS CREEK	8	BRIDGEPORT	ALABAMA	5/77	1	E
TEXAS MUNICIPAL POWER AGENCY						
GIBBONS CREEK	1	CARLOS	TEXAS	10/82	2	A
TEXAS POWER & LIGHT						
SANDOW	4	ROCKDALE	TEXAS	12/80	1	B
TWIN OAKS	1	BREMOND	TEXAS	8/85	3	A
TWIN OAKS	2	BREMOND	TEXAS	8/87	3	A
TEXAS UTILITIES						
FOREST GROVE	1	ATHENS	TEXAS	0/87	5	A
MARTIN LAKE	1	TATUM	TEXAS	4/77	1	B
MARTIN LAKE	2	TATUM	TEXAS	5/78	1	B
MARTIN LAKE	3	TATUM	TEXAS	2/79	1	B
MARTIN LAKE	4	TATUM	TEXAS	0/89	3	A
MILL CREEK	1	HENDERSON	TEXAS	0/87	6	A
MILL CREEK	2	HENDERSON	TEXAS	0/88	6	A
MONTICELLO	3	MT. PLEASANT	TEXAS	5/78	1	B
TUCSON ELECTRIC POWER						
SPRINGERVILLE	1	SPRINGERVILLE	ARIZONA	2/85	3	B
SPRINGERVILLE	2	SPRINGERVILLE	ARIZONA	3/87	3	B
UNITED POWER ASSOCIATION						
STANTON	1A	STANTON	NORTH DAKOTA	6/82	2	A
UTAH POWER & LIGHT						
HUNTER	1	CASTLE DALE	UTAH	5/79	1	B
HUNTER	2	CASTLE DALE	UTAH	6/80	1	B
HUNTER	3	CASTLE DALE	UTAH	6/83	2	A
HUNTER	4	CASTLE DALE	UTAH	6/85	2	A
HUNTINGTON	1	PRICE	UTAH	5/78	1	B
NAUGHTON	3	KEMMERER	WYOMING	9/81	1	C

1. OPERATIONAL UNITS
2. UNITS UNDER CONSTRUCTION
3. PLANNED - CONTRACT AWARDED
4. PLANNED - LETTER OF INTENT SIGNED
5. PLANNED - REQUESTING/EVALUATING BIDS
6. PLANNED - CONSIDERING ONLY FGD SYSTEMS
7. PLANNED - CONSIDERING FGD SYSTEMS; ALSO ALTERNATIVE METHODS

A. FEDERAL NSPS(6/79)
B. FEDERAL NSPS(12/71)
C. STANDARD(S) MORE STRINGENT THAN NSPS(6/79)
D. STANDARD(S) MORE STRINGENT THAN NSPS(12/71) BUT NOT MORE STRINGENT THAN NSPS(6/79)
E. STANDARD(S) EQUAL TO OR LESS STRINGENT THAN NSPS(12/71)

SECTION 1
SUMMARY LIST OF FGD SYSTEMS

COMPANY NAME/ UNIT NAME	UNIT NO.	UNIT LOCATION		START-UP DATE	STATUS	REG CLASS
WASHINGTON WATER POWER						
CRESTON COAL	1	CRESTON	WASHINGTON	0/87	6	A
CRESTON COAL	2	CRESTON	WASHINGTON	0/87	6	C
CRESTON COAL	3	CRESTON	WASHINGTON	0/87	6	C
CRESTON COAL	4	CRESTON	WASHINGTON	0/87	6	
WEST PENN POWER						
MITCHELL	33	COURTNEY	PENNSYLVANIA	8/82	2	C
WEST TEXAS UTILITIES						
OKLAUNION	1	OKLAUNION	TEXAS	12/86	3	A
OKLAUNION	2	OKLAUNION	TEXAS	0/90	6	A

1. OPERATIONAL UNITS
2. UNITS UNDER CONSTRUCTION
3. PLANNED - CONTRACT AWARDED
4. PLANNED - LETTER OF INTENT SIGNED
5. PLANNED - REQUESTING/EVALUATING BIDS
6. PLANNED - CONSIDERING ONLY FGD SYSTEMS
7. PLANNED - CONSIDERING FGD SYSTEMS; ALSO ALTERNATIVE METHODS

A. FEDERAL NSPS(6/79)
B. FEDERAL NSPS(12/71)
C. STANDARD(S) MORE STRINGENT THAN NSPS(6/79)
D. STANDARD(S) MORE STRINGENT THAN NSPS(12/71) BUT NOT MORE STRINGENT THAN NSPS(6/79)
E. STANDARD(S) EQUAL TO OR LESS STRINGENT THAN NSPS(12/71)

SECTION 2
STATUS OF FGD SYSTEMS

UNIT IDENTIFICATION	ABSTRACT
ALABAMA ELECTRIC TOMBIGBEE 2 NEW 255 MW (GROSS) 179 MW (ESC) COAL 1.15 %S BITUMINOUS LIMESTONE PEABODY PROCESS SYSTEMS ENERGY CONSUMPTION: 3.1% STATUS 1 STARTUP 9/78	TOMBIGBEE 2 OF ALABAMA ELECTRIC COOP IS A PULVERIZED COAL BOILER LOCATED IN LEROY, ALABAMA. THE BOILER GENERATES A MAXIMUM FLUE GAS FLOW OF 953,000 ACFM AND BURNS BITUMINOUS COAL WITH AN AVERAGE SULFUR CONTENT OF 1.15% AND AN AVERAGE HEAT CONTENT OF 11,500 BTU/LB. THE UNIT SO2 EMMISSION LIMITATION VALUE IS 1.2 LB/MMBTU. PRIMARY PARTICULATE MATTER CONTROL IS PROVIDED BY A HOT SIDE ESP. THE SO2 REMOVAL EQUIPMENT CONSISTS OF TWO SPRAY TOWERS SUPPLIED BY PEABODY PROCESS SYSTEMS WHICH UTILIZE A LIMESTONE REAGENT. A CHEVRON MIST ELIMINATOR IS INCLUDED FOR EACH TOWER AND THE FLUE GAS IS REHEATED WITH BYPASSED GAS BEFORE BEING VENTED TO A 400 FOOT ACID-BRICK LINED STACK. THE SYSTEM OPERATES IN AN OPEN WATER LOOP MODE AND SPENT ABSORBENT IS DISPOSED OF IN AN ON-SITE LINED POND.
ALABAMA ELECTRIC TOMBIGBEE 3 NEW 255 MW (GROSS) 179 MW (ESC) COAL 1.15 %S BITUMINOUS LIMESTONE PEABODY PROCESS SYSTEMS ENERGY CONSUMPTION: 3.1% STATUS 1 STARTUP 6/79	TOMBIGBEE 3 OF ALABAMA ELECTRIC COOP IS A PULVERIZED COAL BOILER LOCATED IN LEROY, ALABAMA. THE BOILER GENERATES A MAXIMUM FLUE GAS FLOW OF 953,000 ACFM AND BURNS BITUMINOUS COAL WITH AN AVERAGE SULFUR CONTENT OF 1.15% AND AN AVERAGE HEAT CONTENT OF 11,500 BTU/LB. THE UNIT SO2 EMISSION LIMITATION VALUE IS 1.2 LB/MMBTU. PRIMARY PARTICULATE CONTROL IS PROVIDED BY A HOT SIDE ESP. THE SO2 REMOVAL EQUIPMENT CONSISTS OF TWO SPRAY TOWERS SUPPLIED BY PEABODY PROCESS SYSTEMS WHICH UTILIZE A LIMESTONE REAGENT. A CHEVRON MIST ELIMINATOR IS INCLUDED IN EACH TOWER, AND THE FLUE GAS IS REHEATED WITH BYPASSED GAS BEFORE BEING VENTED TO A 400 FOOT ACID BRICK LINED STACK. THE SYSTEM OPERATES IN AN OPEN WATER LOOP MODE, AND SPENT ABSORBENT IS DISPOSED IN AN ON-SITE LINED POND.
ARIZONA ELECTRIC POWER APACHE 2 NEW 195 MW (GROSS) 98 MW (ESC) COAL .50 %S BITUMINOUS LIMESTONE RESEARCH-COTTRELL ENERGY CONSUMPTION: 4.1% STATUS 1 STARTUP 8/78	APACHE 2 OF ARIZONA ELECTRIC POWER COOP IS LOCATED IN COCHISE, ARIZONA AND IS A DRY BOTTOM PULVERIZED COAL FIRED UNIT WITH A FLUE GAS FLOW OF 735,000 ACFM. BITUMINOUS COAL WITH A HEATING VALUE OF 10,000 BTU/LB, A SULFUR CONTENT OF 0.55% AND AN ASH CONTENT OF 15% IS THE FUEL USED FOR THIS UNIT. PARTICULATE CONTROL IS EFFECTED BY A HOT SIDE ESP. HALF THE FLUE GAS PASSES THROUGH TWO RESEARCH-COTTRELL PACKED TOWERS EMPLOYING LIMESTONE ABSORBENT AND HAVING A DESIGN SO2 REMOVAL OF 85%. MIST ELINIMATION IS PROVIDED BY CHEVRON TYPE ELIMINATORS. NO REHEAT IS EMPLOYED. A 400 FT COLE BRAND CXL2000 LINED STACK IS IN USE. THE SYSTEM OPERATES IN AN OPEN WATER LOOP MODE AND WASTE MATERIAL IS DISPOSED OF IN OFF-SITE SLUDGE PONDS. OPERATIONS COMMENCED IN AUGUST 1978.
ARIZONA ELECTRIC POWER APACHE 3 NEW 195 MW (GROSS) 98 MW (ESC) COAL .50 %S BITUMINOUS LIMESTONE RESEARCH-COTTRELL ENERGY CONSUMPTION: 4.1% STATUS 1 STARTUP 6/79	APACHE 3 OF ARIZONA ELECTRIC POWER COOP IS A DRY BOTTOM, PULVERIZED COAL FIRED UNIT IN COCHISE, ARIZONA. LOW (0.55%) SULFUR BITUMINOUS COAL WITH AN AVERAGE HEATING VALUE OF 10,000 BTU/LB PRODUCES A MAXIMUM FLUE GAS FLOW OF 735,000 ACFM. HALF OF THE FLUE GAS PASSES THROUGH A HOT SIDE ESP TO TWO RESEARCH COTTRELL PACKED TOWERS, WHERE LIMESTONE IS USED TO REMOVE 85% OF THE SO2. THE GAS EXITS A HORIZONTAL CHEVRON MIST ELIMINATOR INTO ITS OWN CEILCOTE LINED FLUE IN THE 400 FOOT STACK IT SHARES WITH UNIT 2. THE FGD SYSTEM WHICH HAS BEEN OPERATIONAL SINCE JUNE OF 1979, USES NO REHEAT. THE SYSTEM OPERATES IN AN OPEN WATER LOOP AND SLUDGE IS DISPOSED OF IN TWO OFF SITE LINED PONDS WITH 20 YEARS EXPECTED LIFESPAN. TWO ADDITIONAL PONDS ARE PLANNED, WHICH WOULD ADD ANOTHER 20 YEARS OF DISPOSAL CAPACITY.
ARIZONA PUBLIC SERVICE CHOLLA 1 RETROFIT 119 MW (GROSS) 119 MW (ESC) COAL .50 %S BITUMINOUS LIMESTONE RESEARCH-COTTRELL ENERGY CONSUMPTION: 3.4% STATUS 1 STARTUP 10/73	ARIZONA PUBLIC SERVICE'S CHOLLA 1 IS LOCATED IN JOSEPH CITY, ARIZONA AND IS A TANGENTIALLY FIRED, WET BOTTOM PULVERIZED COAL UNIT. IT IS FUELED BY BITUMINOUS COAL THAT HAS A SULFUR CONTENT OF 0.5% AND A HEATING VALUE OF 10,150 BTU/LB. PARTICULATE MATTER IS CONTROLLED BY TWO FLOODED DISC SCRUBBERS. THE FGD SYSTEM STARTED UP IN OCTOBER, 1973 AND IS NOW OPERATIONAL. SO2 IS CONTROLLED BY ONE TOWER WITH MUNTERS PACKING EMPLOYING A LIMESTONE ABSORBENT. THE UNIT, SUPPLIED BY RESEARCH COTTRELL, HAS A DESIGN SO2 RE-REMOVAL EFFICIENCY OF 92%. CHEVRON MIST ELIMINATORS ARE LOCATED PRIOR TO AN IN-LINE STEAM REHEAT SYSTEM. THE TREATED FLUE GAS IS VENTED TO A 256 FT ACID BRICK LINED STACK. THE FGD SYSTEM OPERATES IN AN OPEN WATER LOOP MOD AND THE UNTREATED WASTE IS DISPOSED OF IN AN ON-SITE UNLINED POND.
ARIZONA PUBLIC SERVICE CHOLLA 2 NEW 264 MW (GROSS) 264 MW (ESC) COAL .50 %S BITUMINOUS LIMESTONE RESEARCH-COTTRELL ENERGY CONSUMPTION: ****% STATUS 1 STARTUP 4/78	CHOLLA 2 OF ARIZONA PUBLIC SERVICE IS LOCATED IN JOSEPH CITY, ARIZONA. THE BOILER BURNS PULVERIZED BITUMINOUS COAL (0.5% S, 10,150 BTU/LB). MECHANICAL COLLECTORS PROVIDE PRIMARY PARTICULATE CONTROL. FOUR PARALLEL FLOODED DISC AND PACKED TOWER SO2 ABSORBER TRAINS (THREE ARE REQUIRED FOR FULL LOAD) REMOVE THE FLUE GAS SO2. THE DESIGN SO2 REMOVAL FOR THE SYSTEM, WHICH BEGAN OPERATIONS IN APRIL, 1978, IS 75%. THE CLEANED GAS PASSES THROUGH AN IN-LINE STEAM REHEATER INTO AN ACID BRICK LINED STACK. SLUDGE FROM THE OPEN WATER LOOP SYSTEM IS DESPOSITED IN A FLY ASH POND.

SECTION 2
STATUS OF FGD SYSTEMS

UNIT IDENTIFICATION	ABSTRACT
ARIZONA PUBLIC SEPVICE CHOLLA 4 NEW 375 MW (GROSS) 126 MW (ESC) COAL .50 %S LIMESTONE PESEARCH-COTTRELL ENEPGY CONSUMPTION: ****% STATUS 1 STARTUP 3/81	CHOLLA 4 OF ARIZONA PUBLIC SERVICE IS LOCATED IN JOSEPH CITY, ARIZONA. THE PULVERIZED COAL (0.5% S, 10150 BTU/LB) FIPED BOILER EXHAUSTS FLUE GAS THROUGH AN ESP TO A DOUBLE LOOP COMBINATION TOWER (RESEARCH-COTTRELL DESIGN) WHICH TREATS 36% OF THE GAS WITH LIMESTONE. OPERATIONS COMMENCED IN MARCH, 1981.
ARIZONA PUBLIC SERVICE FOUR CORNERS 1 RETROFIT 175 MW (GROSS) 175 MW (ESC) COAL .75 %S SUBBITUMINOUS LIME/ALKALINE FLYASH GE ENVIRONMENTAL SERVICES ENERGY CONSUMPTION: ****% STATUS 1 STARTUP 11/79	ARIZONA PUBLIC SERVICE HAS UPGRADED THE OPERATIONAL PARTICULATE SCRUBBERS AT FOUR CORNERS 1, 2, AND 3 IN FARMINGTON, NEW MEXICO TO HANDLE ADDITIONAL SO2 REMOVAL. THE FRONT FIRED, DRY BOTTOM, PULVERIZED COAL (SUB-BITUMINOUS, 0.75% S, 8650 BTU/LB) UNITS 1 AND 2 SUPPLY 814,000 ACFM EACH INTO 2 GEESI VENTURI SCRUBBERS PER UNIT FOR PRIMARY PARTICLE CONTPOL AND APPPOXIMATELY 30% SO2 REMOVAL USING ALKALINE FLY ASH. THE DESIGN SO2 REMOVAL EFFICIENCY SINCE THE CONVERSION TO LIME AND ALKALINE FLY ASH SCRUBBING IS 67.5%. OPERATIONS COMMENCED IN NOVEMBER, 1979.
ARIZONA PUBLIC SERVICE FOUR CORNERS 2 RETROFIT 175 MW (GROSS) 175 MW (ESC) COAL .75 %S SUBBITUMINOUS LIME/ALKALINE FLYASH GE ENVIRONMENTAL SERVICES ENEPGY CONSUMPTION: ****% STATUS 1 STARTUP 11/79	ARIZONA PUBLIC SERVICE HAS UPGRADED THE OPERATIONAL PARTICULATE SCRUBBERS AT FOUR CORNERS 1,2, AND 3 IN FARMINGTON, NEW MEXICO TO HANDLE ADDITIONAL SO2 REMOVAL. THE FRONT FIRED, DRY BOTTOM, PULVERIZED COAL (SUB-BITUMINOUS, 0.75% S, 8650 BTU/LB) UNITS 1 AND 2 SUPPLY 814,000 ACFM EACH INTO 2 GEESI VENTURI SCRUBBERS PER UNIT FOR PRIMARY PARTICLE CONTPOL AND APPROXIMATELY 30% SO2 REMOVAL USING ALKALINE FLY ASH. THE DESIGN SO2 REMOVAL EFFICIENCY SINCE THE CONVERSION TO LIME AND ALKALINE FLY ASH SCRUBBING IS 67.5%. OPERATIONS COMMENCED IN NOVEMBER, 1979.
ARIZONA PUBLIC SERVICE FOUR CORNERS 3 RETROFIT 229 MW (GROSS) 229 MW (ESC) COAL .75 %S SUBBITUMINOUS LIME/ALKALINE FLYASH GE ENVIRONMENTAL SERVICES ENERGY CONSUMPTION: ****% STATUS 1 STARTUP 11/79	ARIZONA PUBLIC SERVICE HAS UPGRADED THE OPERATIONAL PARTICULATE SCRUBBERS AT FOUR CORNERS 1,2, AND 3 IN FAPMINGTON, NEW MEXICO TO HANDLE ADDITIONAL SO2 REMOVAL. THE FRONT FIRED, DRY BOTTOM, PULVERIZED COAL (SUB-BITUMINOUS, 0.75% S, 8650 BTU/LB) UNIT 3 SUPPLIES 1,030,000 ACFM INTO 2 INTO 2 GEESI VENTURI SCRUBBERS PER UNIT FOR PRIMARY PARTICLE CONTROL LY 30% SO2 REMOVAL USING ALKALINE FLY ASH. THE DESIGN SO2 REMOVAL EFFICIENCY SINCE THE CONVERSION TO LIME AND ALKALINE FLY ASH SCRUBBING IS 67.5%. OPERATIONS COMMENCED IN NOVEMBER, 1979.
ARIZONA PUBLIC SERVICE FOUR CORNERS 4 RETROFIT 755 MW (GROSS) 755 MW (ESC) COAL .75 %S LIME BABCOCK & WILCOX ENERGY CONSUMPTION: ****% STATUS 2 STARTUP 12/84	ARIZONA PUBLIC SERVICE AWARDED A CONTRACT TO BABCOCK & WILCOX FOR A LIME FGD SYSTEM TO BE RETROFITTED ONTO UNITS 4 AND 5 AT ITS FOUR CORNERS STATION IN FARMINGTON, NEW MEXICO. ALTHOUGH INITIAL PLANS CALLED FOR THE INSTALLATION OF HORIZONTAL ABSORBERS, THE B & W SYSTEM WILL INCLUDE VERTICAL SPRAY TOWERS TO CONTROL EMISSIONS FROM THESE COAL (0.75% S, 8650 BTU/LB) FIRED UNITS. THE PARTICULATE EMISSIONS ARE HANDLED BY AN ESP. START-UP IS EXPECTED IN DECEMBER 1984.
ARIZONA PUBLIC SERVICE FOUR CORNERS 5 RETROFIT 755 MW (GROSS) 755 MW (ESC) COAL .75 %S LIME BABCOCK & WILCOX ENERGY CONSUMPTION: ****% STATUS 2 STARTUP 12/84	ARIZONA PUBLIC SERVICE AWARDED A CONTRACT TO BABCOCK & WILCOX FOR A LIME FGD SYSTEM TO BE RETROFITTED ONTO UNITS 4 AND 5 AT ITS FOUR CORNERS STATION IN FARMINGTON, NEW MEXICO. ALTHOUGH INITIAL PLANS CALLED FOR THE INSTALLATION OF HORIZONTAL ABSORBERS, THE B & W SYSTEM WILL INCLUDE VERTICAL SPRAY TOWERS TO CONTROL EMISSIONS FROM THESE COAL (0.75% S, 8650 BTU/LB) FIRED UNITS. THE PARTICULATE EMISSIONS ARE HANDLED BY AN ESP. START-UP IS EXPECTED IN DECEMBER 1984.

SECTION 2
STATUS OF FGD SYSTEMS

UNIT IDENTIFICATION	ABSTRACT
ASSOCIATED ELECTRIC THOMAS HILL 3 NEW 730 MW (GROSS) 670 MW (ESC) COAL 4.80 %S LIMESTONE M.W. KELLOGG ENERGY CONSUMPTION: ****% STATUS 2 STARTUP 1/82	THOMAS HILL 3 OF ASSOCIATED ELECTRIC COOP IS A PULVERIZED COAL (4.8% S, 9,700 BTU/LB) FIRED UNIT UNDER CONSTRUCTION IN MOBERLY, MISSOURI. TWO COLD SIDE ESP'S WILL PRECEDE THE FOUR 91.5% EFFICIENT M. W. KELLOGG HORIZONTAL WEIR FGD MODULES USING MAG-PROMOTED LIMESTONE AS THE ABSORBENT. THE CLEANED GAS WILL PASS THROUGH A VERTICAL CHEVRON MIST ELIMINATOR TO A 620 FOOT BRICK LINED STACK. REHEAT WILL BE ACCOMPLISHED BY FLUE GAS BYPASS. FIXATED SLUDGE WILL BE TRUCKED TO AN ACTIVE STRIP MINE. THE SYSTEM WILL OPERATE IN A CLOSED WATER LOOP. THE FGD SYSTEM IS UNDER CONSTRUCTION AND START-UP IS EXPECTED IN JANUARY 1982.
ATLANTIC CITY ELECTRIC CUMBERLAND 1 NEW 330 MW (GROSS) 330 MW (ESC) COAL 3.25 %S BITUMINOUS PROCESS NOT SELECTED VENDOR NOT SELECTED ENERGY CONSUMPTION: ****% STATUS 6 STARTUP 1/88	CUMBERLAND 1 IS A PULVERIZED COAL (3.25% S) FIRED BOILER TO BE LOCATED IN MILVILLE, NEW JERSEY. THE UTILITY IS CONSIDERING A THROWAWAY PRODUCT FGD SYSTEM FOR SO2 CONTROL. OPERATIONS ARE SCHEDULED TO BEGIN IN JANUARY 1988.
BASIN ELECTRIC POWER ANTELOPE VALLEY 1 NEW 440 MW (GROSS) 440 MW (ESC) COAL .68 %S LIGNITE LIME/SPRAY DRYING JOY MFG/NIRO ATOMIZER ENERGY CONSUMPTION: ****% STATUS 2 STARTUP 10/83	UNIT 1 OF BASIN ELECTRIC POWER COOP'S ANTELOPE VALLEY PLANT IS PRESENTLY UNDER CONSTRUCTION IN BEULAH, NORTH DAKOTA. THIS UNIT WILL BURN PULVERIZED COAL (0.68% S, 6600 BTU/LB LIGNITE) AND SUPPLY 2,055,000 ACFM TO A DRY LIME FGD SYSTEM SUPPLIED BY WESTERN PRECIPITATION. THE 62% EFFICIENT SYSTEM WILL CONSIST OF 5 NIRO ATOMIZER SPRAY DRYERS AND TWO BAGHOUSES. THE CLEANED GAS, ALONG WITH A 4% BYPASS REHEAT, WILL EXIT A 600 FOOT PVC LINED STACK. THE DRY POWDER GENERATED BY THIS CLOSED WATER LOOP SYSTEM WILL BE USED FOR LANDFILL IN A COAL MINE. START-UP IS EXPECTED IN OCTOBER 1983.
BASIN ELECTRIC POWER ANTELOPE VALLEY 2 NEW 440 MW (GROSS) 440 MW (ESC) COAL .68 %S LIGNITE LIME/SPRAY DRYING JOY MFG/NIRO ATOMIZER ENERGY CONSUMPTION: ****% STATUS 2 STARTUP 10/85	ANTELOPE VALLEY 2 OF BASIN ELECTRIC POWER COOP WILL BE LOCATED IN BEULAH, NORTH DAKOTA. JOY/NIRO HAS BEEN AWARDED A CONTRACT FOR THIS LIGNITE (0.68% S, 6600 BTU/LB) FIRED UNIT. THE UNIT WILL BE REQUIRED TO COMPLY WITH STATE EMISSIONS STANDARDS VIA BEST AVAILABLE CONTROL TECHNOLOGY. START-UP IS SCHEDULED FOR OCTOBER 1985.
BASIN ELECTRIC POWER LARAMIE RIVER 1 NEW 570 MW (GROSS) 570 MW (ESC) COAL .81 %S SUBBITUMINOUS LIMESTONE RESEARCH-COTTRELL ENERGY CONSUMPTION: ****% STATUS 1 STARTUP 7/80	BASIN ELECTRIC POWER COOP'S LARAMIE RIVER 1 IS A PULVERIZED COAL (0.8% S, 8139 BTU/LB) FIRED UNIT LOCATED IN WHEATLAND, WYOMING. THE BOILER FEEDS 2,300,000 ACFM OF FLUE GAS THROUGH A COLD SIDE ESP TO FIVE RESEARCH COTTRELL LIMESTONE PACKED TOWER MODULES, WHICH REMOVE 90% OF THE SO2. THE CLEANED GAS EXITS FROM A VERTICAL CHEVRON MIST ELIMINATOR INTO A 600 FOOT ACID BRICK LINED STACK. NO REHEAT IS USED. THE FLYASH FIXATED SLUDGE IS DEWATERED TO 83% SOLIDS BEFORE BEING LANDFILLED, AND THE SYSTEM EMPLOYS A CLOSED WATER LOOP. OPERATIONS BEGAN ON JULY 1, 1980.
BASIN ELECTRIC POWER LARAMIE RIVER 2 NEW 570 MW (GROSS) 570 MW (ESC) COAL .81 %S SUBBITUMINOUS LIMESTONE RESEARCH-COTTRELL ENERGY CONSUMPTION: ****% STATUS 1 STARTUP 7/81	BASIN ELECTRIC POWER COOP'S LARAMIE RIVER 2 IS A NEW UNIT LOCATED IN WHEATLAND, WYOMING. THE PULVERIZED COAL (0.81% S, 8139 BTU/LB) FIRED BOILER FEEDS 2,300,000 ACFM OF FLUE GAS THROUGH A COLD SIDE ESP TO FIVE RESEARCH-COTTRELL LIMESTONE PACKED TOWER MODULES, WHICH REMOVE 90% OF THE SO2. THE CLEANED GAS EXITS FROM A VERTICAL CHEVRON MIST ELIMINATOR INTO A 600 FOOT ACID BRICK LINED STACK. NO REHEAT IS USED. THE FLYASH FIXATED SLUDGE IS DEWATERED TO 83% SOLIDS BEFORE BEING LANDFILLED IN THIS CLOSED WATER LOOP SYSTEM. START-UP TOOK PLACE IN JULY 1981.

SECTION 2
STATUS OF FGD SYSTEMS

UNIT IDENTIFICATION	ABSTRACT
BASIN ELECTRIC POWER LARAMIE RIVER 3 NEW 570 MW (GROSS) 570 MW (ESC) COAL .54 %S SUBBITUMINOUS LIME/SPRAY DRYING BABCOCK & WILCOX ENERGY CONSUMPTION: ****% STATUS 2 STARTUP 11/82	LARAMIE RIVER 3 OF BASIN ELECTRIC POWER COOP IS UNDER CONSTRUCTION IN WHEATLAND, WYOMING, AND WILL UTILIZE FOUR DRY LIME INJECTION MODULES, AND A COLD SIDE ESP. THE BOILER WILL FIRE PULVERIZED COAL (0.54% S, 8100 BTU/LB) AND WILL SUPPLY 2,800,000 ACFM OF FLUE GAS TO THE FGD SYSTEM, WHICH WILL REMOVE 85% OF THE SO2 BEFORE THE GAS EXITS THROUGH A 600 FOOT ACID BRICK LINED STACK. A 3% BYPASS WILL BE USED FOR REHEAT. THE SYSTEM WILL OPERATE IN A CLOSED WATER LOOP, AND THE DRY POWDER WASTE WILL BE LANDFILLED. OPERATIONS ARE SCHEDULED TO COMMENCE IN NOV. 1982.
BIG RIVERS ELECTRIC D.B. WILSON 1 NEW 440 MW (GROSS) 440 MW (ESC) COAL **** %S BITUMINOUS LIMESTONE M.W. KELLOGG ENERGY CONSUMPTION: ****% STATUS 2 STARTUP 7/84	BIG RIVERS ELECTRIC HAS PLANS FOR TWO NEW UNITS, D.B. WILSON 1 AND 2. THE PULVERIZED COAL FIRED BOILERS WILL HAVE A MW RATING OF 440 EACH. THE WET LIMESTONE FGD SYSTEM FOR UNIT 1 IS CURRENTLY UNDER CONSTRUCTION. START-UP IS SCHEDULED FOR JULY 1984.
BIG RIVERS ELECTRIC D.B. WILSON 2 NEW 440 MW (GROSS) 440 MW (ESC) COAL ***** %S BITUMINOUS LIMESTONE M.W. KELLOGG ENERGY CONSUMPTION: ****% STATUS 3 STARTUP 0/ 0	BIG RIVERS ELECTRIC HAS PLANS FOR TWO NEW UNITS, D.B. WILSON 1 AND 2. THE PULVERIZED COAL FIRED BOILERS WILL HAVE A MW RATING OF 440 EACH. M. W. KELLOG HAS BEEN AWARDED A CONTRACT FOR A WET LIMESTONE FGD SYSTEM. START-UP HAS BEEN DEFERRED INDEFINITELY.
BIG RIVERS ELECTRIC GREEN 1 NEW 242 MW (GROSS) 242 MW (ESC) COAL 3.75 %S BITUMINOUS LIME AMERICAN AIR FILTER ENERGY CONSUMPTION: ****% STATUS 1 STARTUP 12/79	UNIT 1 OF BIG RIVERS ELECTRIC'S GREEN STATION IS LOCATED IN SEBREE,KENTUCKY. THE DRY BOTTOM PULVERIZED COAL (3.75% S, 9750 BTU/LB) FIRED BOILER SUPPLIES 1,000,000 ACFM TO A COLD SIDE ESP FOLLOWED BY TWO AMERICAN AIR FILTER LIME SPRAY TOWERS WHICH REMOVE 90% OF THE SO2. THE CLEANED GAS PASSES THROUGH A CHEVRON MIST ELIMINATOR AND EXITS A SAUERISEN 72 LINED STACK AFTER IT IS HEATED BY A STEAM COIL REHEATER. THE SLUDGE FROM THE CLOSED WATER LOOP SYSTEM IS POZ-O-TEC STABILIZED. OPERATIONS COMMENCED IN DECEMBER 1979.
BIG RIVERS ELECTRIC GREEN 2 NEW 242 MW (GROSS) 242 MW (ESC) COAL 3.75 %S BITUMINOUS LIME AMERICAN AIR FILTER ENERGY CONSUMPTION: ****% STATUS 1 STARTUP 11/80	UNIT 2 OF BIG RIVERS ELECTRIC'S GREEN STATION IS LOCATED IN SEBREE, KENTUCKY. THE DRY BOTTOM PULVERIZED COAL (3.75% S, 9750 BTU/LB) FIRED BOILER SUPPLIES 1,000,000 ACFM TO A COLD SIDE ESP FOLLOWED BY TWO AMERICAN AIR FILTER LIME SPRAY TOWERS WHICH REMOVE 90% OF THE SO2. THE CLEANED GAS PASSES THROUGH A CHEVRON MIST ELIMINATOR AND EXITS A SAUERISEN 72 LINED STACK AFTER IT IS HEATED BY A STEAM COIL REHEATER. THE SLUDGE FROM THE CLOSED WATER LOOP SYSTEM IS POZ-O-TEC STABILIZED. OPERATIONS COMMENCED IN NOVEMBER 1980.
CAJUN ELECTRIC POWER CHICOT 1 NEW 562 MW (GROSS) 562 MW (ESC) LIGNITE 1.70 %S PROCESS NOT SELECTED VENDOR NOT SELECTED ENERGY CONSUMPTION: ****% STATUS 6 STARTUP 0/86	CAJUN ELECTRIC POWER COOP HAS PLANS FOR A NEW UNIT, CHICOT 1, TO BE LOCATED IN SHREVEPORT, LOUISIANA. THE UTILITY IS CONSIDERING A DRY SCRUBBING FGD SYSTEM FOR EMISSION CONTROL FROM THE LIGNITE FIRED BOILER. OPERATIONS ARE SCHEDULED TO COMMENCE IN 1986.

SECTION 2
STATUS OF FGD SYSTEMS

UNIT IDENTIFICATION	ABSTRACT
CAJUN ELECTRIC POWER CHICOT 2 NEW 562 MW (GROSS) 562 MW (ESC) LIGNITE 1.70 %S PROCESS NOT SELECTED VENDOR NOT SELECTED ENERGY CONSUMPTION: ****% STATUS 6 STARTUP 0/88	CAJUN ELECTRIC POWER COOP HAS PLANS FOR A NEW UNIT, CHICOT 2, TO BE LOCATED IN SHREVEPORT, LOUISIANA. THE UTILITY IS CONSIDERING A DRY SCRUBBING FGD SYSTEM FOR EMISSION CONTROL FROM THE LIGNITE FIRED BOILER. OPERATIONS ARE SCHEDULED TO COMMENCE IN 1988.
CAJUN ELECTRIC POWER CHICOT 3 NEW 562 MW (GROSS) 562 MW (ESC) LIGNITE 1.70 %S PROCESS NOT SELECTED VENDOR NOT SELECTED ENERGY CONSUMPTION: ****% STATUS 6 STARTUP 0/92	CAJUN ELECTRIC POWER COOP HAS PLANS FOR A NEW UNIT, CHICOT 3, TO BE LOCATED IN SHREVEPORT, LOUISIANA. THE UTILITY IS CONSIDERING A DRY SCRUBBING FGD SYSTEM FOR EMISSION CONTROL FROM THE LIGNITE FIRED BOILER. OPERATIONS ARE SCHEDULED TO COMMENCE IN 1992.
CAJUN ELECTRIC POWER CHICOT 4 NEW 562 MW (GROSS) 562 MW (ESC) LIGNITE 1.70 %S PROCESS NOT SELECTED VENDOR NOT SELECTED ENERGY CONSUMPTION: ****% STATUS 6 STARTUP 0/94	CAJUN ELECTRIC POWER COOP HAS PLANS FOR A NEW UNIT, CHICOT 4, TO BE LOCATED IN SHREVEPORT, LOUISIANA. THE UTILITY IS CONSIDERING A DRY SCRUBBING FGD SYSTEM FOR EMISSION CONTROL FROM THE LIGNITE FIRED BOILER. OPERATIONS ARE SCHEDULED TO COMMENCE IN 1994.
CAJUN ELECTRIC POWER OXBOW 1 NEW 540 MW (GROSS) 540 MW (ESC) COAL .60 %S LIGNITE PROCESS NOT SELECTED VENDOR NOT SELECTED ENERGY CONSUMPTION: ****% STATUS 5 STARTUP 0/85	CAJUN ELECTRIC HAS PLANS TO CONSTRUCT A 540 MW UNIT, OXBOW 1, TO BE LOCATED IN DE SOLO PARISH, LOUISIANA. THE UTILITY IS REQUESTING BIDS FOR A DRY SCRUBBING PROCESS TO CONTROL EMISSIONS FROM THE PULVERIZED COAL FIRED BOILER. THE UNIT IS SCHEDULED TO COMMENCE OPERATIONS IN 1985.
CAJUN ELECTRIC POWER OXBOW 2 NEW 540 MW (GROSS) 540 MW (ESC) COAL .60 %S LIGNITE PROCESS NOT SELECTED VENDOR NOT SELECTED ENERGY CONSUMPTION: ****% STATUS 6 STARTUP 0/85	CAJUN ELECTRIC HAS PLANS TO CONSTRUCT A 540 MW UNIT, OXBOW 2, TO BE LOCATED IN DE SOLO PARISH, LOUISIANA. THE UTILITY IS PRESENTLY CONSIDERING A DRY SCRUBBING PROCESS TO CONTROL EMISSIONS FROM THE PULVERIZED COAL FIRED BOILER. OPERATIONS ARE SCHEDULED TO COMMENCE IN 1985.
CENTRAL ILLINOIS LIGHT DUCK CREEK 1 NEW 416 MW (GROSS) 416 MW (ESC) COAL 3.66 %S BITUMINOUS LIMESTONE ENVIRONEERING, RILEY STOKER ENERGY CONSUMPTION: 2.9% STATUS 1 STARTUP 7/76	DUCK CREEK 1 OF CENTRAL ILLINOIS LIGHT IS LOCATED IN CANTON, ILLINOIS. THE BALANCED DRAFT, FRONT FIRED, DRY BOTTOM UNIT BURNS PULVERIZED BITUMINOUS COAL (3.66% S, 10,500 BTU/LB) AND SUPPLIES 2,415,000 ACFM OF FLUE GAS TO TWO COLD SIDE ESP'S FOLLOWED BY FOUR RILEY STOKER/ENVIRONEERING RCD DECK SPRAY TOWER MODULES. THE FGD SYSTEM HAS BEEN OPERATIONAL (AT LEAST ONE MODULE) SINCE JULY, 1976. IT IS DESIGNED TO REMOVE 85% OF THE SO2. HORIZONTAL CHEVRON MIST ELIMINATORS FOLLOW THE ABSORBERS, AND THE CLEANED GAS EXITS TO A 500 FOOT CEILCOTE LINED STACK WITHOUT REHEAT. THE SYSTEM OPERATES A CLOSED WATER LOOP, AND THE SLUDGE IS DISPOSED OF IN AN ON-SITE CLAY LINED POND.

SECTION 2
STATUS OF FGD SYSTEMS

UNIT IDENTIFICATION	ABSTRACT
CENTRAL ILLINOIS LIGHT DUCK CREEK 2 NEW 450 MW (GROSS) 450 MW (ESC) COAL 3.30 %S BITUMINOUS LIMESTONE VENDOR NOT SELECTED ENERGY CONSUMPTION: ****% STATUS 6 STARTUP 1/87	CENTRAL ILLINOIS LIGHT IS CURRENTLY INVESTIGATING A LIMESTONE OR DUAL ALKALI FGD SYSTEM FOR UNIT 2 AT ITS DUCK CREEK STATION. THE BITUMINOUS COAL FIRED BOILER WILL FEED ITS FLUE GAS THROUGH A COLD SIDE ESP. THE SYSTEM WILL OPERATE IN A CLOSED WATER LOOP AND IS SCHEDULED TO BEGIN OPERATIONS IN JANUARY 1987.
CENTRAL ILLINOIS PUBLIC SERV NEWTON 1 NEW 617 MW (GROSS) 617 MW (ESC) COAL 2.25 %S BITUMINOUS DUAL ALKALI GE ENVIRONMENTAL SERVICES ENERGY CONSUMPTION: 2.4% STATUS 1 STARTUP 9/79	NEWTON 1 OF CENTRAL ILLINOIS PUBLIC SERVICE IS A TANGENTIALLY FIRED, DRY BOTTOM, PULVERIZED BITUMINOUS COAL (2.25% S, 10,900 BTU/LB) FIRED UNIT LOCATED IN NEWTON, ILLINOIS. A COLD SIDE ESP RECEIVES 2,163,480 ACFM OF FLUE GAS AND FEEDS IT TO FOUR GEESI POLYSPHERE PACKED TRAY TOWER ABSORBERS FOLLOWED BY TWO VERTICAL MIST ELIMINATORS PER MODULE. THE CLEANED GAS IS BOOSTED 25 DEG F BY A COMBINATION OF TWO DIFFERENT TYPES OF IN-LINE REHEATERS PLUS BYPASS REHEAT, AND THEN EXITS A 530 FOOT PRECRETE-LINED STACK. THE WATER LOOP IS CLOSED, AND THE SLUDGE IS POZ-O-TEC TREATED.
CENTRAL MAINE POWER SEARS ISLAND 1 NEW 600 MW (GROSS) 600 MW (ESC) COAL 2.23 %S BITUMINOUS PROCESS NOT SELECTED VENDOR NOT SELECTED ENERGY CONSUMPTION: ****% STATUS 6 STARTUP 11/89	SEARS ISLAND 1 IS A PLANNED UNIT TO BE BUILT ON PENOBSCOT BAY BY CENTRAL MAINE POWER. BECAUSE OF THE DISCOVERY OF A GEOLOGICAL FAULT ON SEARS ISLAND, PLANS FOR A 1150 MW NUCLEAR POWER PLANT HAVE BEEN REPLACED WITH PLANS FOR A 600 MW COAL FIRED PLANT. LIME AND LIMESTONE SCRUBBING ARE THE PRIMARY METHODS BEING CONSIDERED FOR COMPLIANCE WITH THE NSPS. IT WILL BE TWO YEARS BEFORE ALL PERMITS REQUIRED HAVE BEEN RECEIVED. START-UP IS SCHEDULED FOR NOVEMBER 1989.
CENTRAL POWER & LIGHT COLETO CREEK 2 NEW 720 MW (GROSS) 720 MW (ESC) COAL .39 %S SUBBITUMINOUS PROCESS NOT SELECTED VENDOR NOT SELECTED ENERGY CONSUMPTION: ****% STATUS 6 STARTUP 9/92	COLETO CREEK 2 OF CENTRAL POWER AND LIGHT IS A COAL (.39%S) FIRED UNIT PLANNED FOR CONSTRUCTION IN FANNIN, TEXAS. THE UNIT WILL BE BUILT BY CENTRAL AND SOUTHWEST SERVICES, BUT WILL BE OPERATED BY CENTRAL POWER AND LIGHT. ONLY DRY SCRUBBING IS BEING CONSIDERED FOR SO2 CONTROL. START-UP IS TENTATIVELY SCHEDULED FOR SEPTEMBER 1992.
CINCINNATI GAS & ELECTRIC EAST BEND 1 NEW 650 MW (GROSS) 650 MW (ESC) COAL 4.00 %S PROCESS NOT SELECTED VENDOR NOT SELECTED ENERGY CONSUMPTION: 2.9% STATUS 6 STARTUP 0/88	CINCINNATI GAS AND ELECTRIC HAS PLANS FOR A NEW UNIT, EAST BEND 1, TO BE LOCATED ADJACENT TO EAST BENT 2 AT THE RABBITHASH, KENTUCKY SITE. THE COAL FIRED BOILER WILL HAVE A GENERATING CAPACITY OF 650 MW. THE UNIT IS SCHEDULED TO START-UP IN 1988.
CINCINNATI GAS & ELECTRIC EAST BEND 2 NEW 650 MW (GROSS) 650 MW (ESC) COAL 3.00 %S LIME BABCOCK & WILCOX ENERGY CONSUMPTION: 2.9% STATUS 1 STARTUP 3/81	EAST BEND 2 OF CINCINNATI GAS AND ELECTRIC IS A PULVERIZED COAL (5% S, DESIGN) FIRED BOILER LOCATED IN RABBITHASH, KENTUCKY. THE EMISSION CONTROL SYSTEM CONSISTS OF A HOT SIDE ESP FOLLOWED BY THREE BABCOCK AND WILCO LIME FGD MODULES. THE CLEANED GAS, 87% SO2 REMOVAL, PASSES THROUGH A CHEVRON MIST ELIMINATOR BEFORE BEING HEATED BY AN INDIRECT HOT AIR REHEATER AND EXITS THROUGH A BRICK LINED 650 FOOT STACK. THE SLUDGE FROM THIS CLOSED WATER LOOP IS POZ-O-TEC STABILIZED BEFORE DISPOSAL IN AN ON-SITE LANDFILL. OPERATIONS COMMENCED IN MARCH 1981.

SECTION 2
STATUS OF FGD SYSTEMS

UNIT IDENTIFICATION	ABSTRACT
COLORADO UTE ELECTRIC CRAIG 1 NEW 455 MW (GROSS) 410 MW (ESC) COAL .45 %S SUBBITUMINOUS LIMESTONE PEABODY PROCESS SYSTEMS ENERGY CONSUMPTION: 1.3% STATUS 1 STARTUP 10/80	THE COLORADO UTE ELECTRIC ASSN HAS CONSTRUCTED A NEW UNIT, CRAIG 1, LOCATED IN CRAIG, COLORADO. BOTH UNITS FIRE PULVERIZED SUBBITUMINOUS COAL (0.45% S, 10,000 BTU/LB). THE EMISSION CONTROL SYSTEM FOR THIS UNIT CONSISTS OF A HOT SIDE ESP AND FOUR LIMESTONE SPRAY TOWERS FOR REMOVAL OF PARTICULATE MATTER AND 85% OF THE SO2. THE SCRUBBER EXHAUST IS HEATED BY A BYPASS REHEATER AND PASSES THROUGH A 600 FOOT ACID LINED STACK. THE SYSTEM OPERATES IN A CLOSED WATER LOOP AND THE STABILIZED SLUDGE IS DISPOSED OF IN AN OFF-SITE MINEFILL. UNIT 1 START-UP IS EXPECTED IN OCTOBER 1980.
COLORADO UTE ELECTRIC CRAIG 2 NEW 455 MW (GROSS) 410 MW (ESC) COAL .45 %S SUBBITUMINOUS LIMESTONE PEABODY PROCESS SYSTEMS ENERGY CONSUMPTION: -2.0% STATUS 1 STARTUP 12/79	THE CRAIG 2 UNIT OF THE COLORADO UTE ELECTRIC ASSN IS LOCATED IN CRAIG, COLORADO AND FIRES PULVERIZED SUBBITUMINOUS COAL (0.45%S, 10,000 BTU/LB). THE EMISSION CONTROL SYSTEM FOR THIS UNIT CONSISTS OF A HOT SIDE ESP AND FOUR LIMESTONE SPRAY TOWERS FOR REMOVAL OF PARTICULATE MATTER AND 85% OF THE SO2. THE SCRUBBER EXHAUST IS HEATED BY A BYPASS REHEATER AND PASSES THROUGH A 600 FOOT ACID BRICK LINED STACK. THE SYSTEM OPERATES IN A CLOSED LOOP, AND THE STABILIZED SLUDGE IS DISPOSED OF IN AN OFF-SITE MINEFILL. START-UP OF UNIT 2 WAS IN DECEMBER 1979.
COLORADO UTE ELECTRIC CRAIG 3 NEW 447 MW (GROSS) 447 MW (ESC) COAL .45 %S SUBBITUMINOUS LIME/SPRAY DRYING BABCOCK & WILCOX ENERGY CONSUMPTION: ****% STATUS 2 STARTUP 4/83	CRAIG 3 OF COLORADO UTE ELECTRIC ASSN. IS UNDER CONSTRUCTION IN CRAIG, COLORADO. THE UNIT WILL FIRE PULVERIZED SUBBITUMINOUS COAL (0.45% S, 10,000 BTU/LB). THE DRY SCRUBBING SYSTEM UTILIZING LIME INJECTION WILL BE SUPPLIED BY BABCOCK AND WILCOX. THE UNIT WILL HAVE A FABRIC FILTER FOR PARTICULATE MATTER CONTROL. OPERATION OF THE FGD SYSTEM IS SCHEDULED TO COMMENCE IN 1983.
COLUMBUS & SOUTHERN OHIO ELEC CONESVILLE 5 NEW 411 MW (GROSS) 411 MW (ESC) COAL 4.67 %S BITUMINOUS LIME AIR CORRECTION DIVISION, UOP ENERGY CONSUMPTION: 3.9% STATUS 1 STARTUP 1/77	CONESVILLE 5 OF COLUMBUS AND SOUTHERN OHIO ELECTRIC IS A DRY BOTTOM, PULVERIZED BITUMINOUS COAL (4.67% S, 10,850 BTU/LB) FIRED UNIT LOCATED IN CONESVILLE, OHIO. A COLD SIDE ESP RECEIVES 1,393,893 ACFM OF FLUE GAS AND PASSES IT TO TWO THIOSORBIC LIME TCA MODULES SUPPLIED BY UOP. THE SO2 REMOVAL EFFICIENCY OF THE TWO MODULES, WHICH BEGAN INITIAL OPERATION IN JANUARY 1977, IS 89.5% (DESIGN). EACH MODULE HAS ONE BULK ENTRAINMENT SEPARATOR AND TWO CHEVRON MIST ELIMINATORS. THE CLEANED GAS EXITS THROUGH AN 800 FOOT ACID BRICK LINED STACK. THE POZ-O-TEC STABILIZED SLUDGE IS PUMPED INTO AN ON-SITE DIKED LANDFILL. THE SYSTEM OPERATES IN AN OPEN WATER LOOP.
COLUMBUS & SOUTHERN OHIO ELEC CONESVILLE 6 NEW 411 MW (GROSS) 411 MW (ESC) COAL 4.67 %S BITUMINOUS LIME AIR CORRECTION DIVISION, UOP ENERGY CONSUMPTION: 3.9% STATUS 1 STARTUP 6/78	CONESVILLE 6 OF COLUMBUS AND SOUTHERN OHIO ELECTRIC IS A DRY BOTTOM, PULVERIZED BITUMINOUS COAL (4.67% S, 10,850 BTU/LB) FIRED UNIT LOCATED IN CONESVILLE, OHIO. A COLD SIDE ESP RECEIVES 1,393,893 ACFM OF FLUE GAS AND PASSES IT TO TWO THIOSORBIC LIME TCA MODULES SUPPLIED BY UOP. THE SO2 REMOVAL EFFICIENCY OF THE TWO MODULES, WHICH BEGAN INITIAL OPERATION IN JUNE 1978, IS 89.5% (DESIGN). EACH MODULE HAS ONE BULK ENTRAINMENT SEPARATOR AND TWO CHEVRON MIST ELIMINATORS. THE CLEANED GAS EXITS THROUGH AN 800 FOOT ACID BRICK LINED STACK. THE POZ-O-TEC STABILIZED SLUDGE IS PUMPED INTO AN ON-SITE DIKED LANDFILL. THE SYSTEM OPERATES IN AN OPEN WATER LOOP.
COLUMBUS & SOUTHERN OHIO ELEC POSTON 5 NEW 425 MW (GROSS) 375 MW (ESC) COAL ***** %S PROCESS NOT SELECTED VENDOR NOT SELECTED ENERGY CONSUMPTION: 4.7% STATUS 6 STARTUP 8/86	COLUMBUS AND SOUTHERN OHIO ELECTRIC HAS PLANS FOR TWO NEW UNITS, POSTON 5 AND 6, TO BE LOCATED IN ATHENS, OHIO. THE COAL (2.5% S, 11,000 BTU/LB) FIRED UNITS WILL UTILIZE EITHER A LIME, LIMESTONE, OR DUAL ALKALI FGD SYSTEM. START-UP OF UNIT 5 IS EXPECTED IN 1986.

SECTION 2
STATUS OF FGD SYSTEMS

UNIT IDENTIFICATION	ABSTRACT
COLUMBUS & SOUTHERN OHIO ELEC POSTON 6 NEW 425 MW (GROSS) 375 MW (ESC) COAL 2.50 %S PROCESS NOT SELECTED VENDOR NOT SELECTED ENERGY CONSUMPTION: 4.7% STATUS 6 STARTUP 0/89	COLUMBUS AND SOUTHERN OHIO ELECTRIC HAS PLANS FOR TWO NEW UNITS, POSTON 5 AND 6, TO BE LOCATED IN ATHENS, OHIO. THE COAL (2.5% S, 11,000 BTU/LB) FIRED UNITS WILL UTILIZE EITHER A LIME, LIMESTONE, OR DUAL ALKALI FGD SYSTEM. START-UP OF UNIT 6 IS EXPECTED IN 1989.
COMMONWEALTH EDISON POWERTON 51 RETROFIT 450 MW (GROSS) 450 MW (ESC) COAL 3.53 %S LIMESTONE AIR CORRECTION DIVISION, UOP ENERGY CONSUMPTION: 5.6% STATUS 1 STARTUP 4/80	COMMONWEALTH EDISON HAS RETROFITTED BOILER NUMBER 51 AT ITS POWERTON STATION WITH A UOP LIMESTONE FGD SYSTEM. UNIT 51 IS ONE OF TWO IDENTICAL BOILERS SUPPLYING STEAM TO AN 850 MW TURBINE. THE PULVERIZED COAL (3.53% S, 10,500 BTU/LB) FIRED BOILER FEEDS FLUE GAS THROUGH AN ESP TO 3 TCA MODULES WHICH ARE DESIGNED TO REMOVE 74% OF THE SO2. A STEAM INDIRECT HOT AIR REHEATER BOOSTS THE TEMPERATURE BEFORE THE GAS EXITS AN ACID BRICK LINED STACK. THE SYSTEM OPERATES IN A CLOSED WATER LOOP, AND THE SLUDGE IS POZ-O-TEC STABILIZED AND DISPOSED OF IN A LANDFILL. THE FGD SYSTEM COMMENCED OPERATION IN APRIL, 1980.
COOPERATIVE POWER ASSOCIATION COAL CREEK 1 NEW 545 MW (GROSS) 327 MW (ESC) COAL .63 %S LIGNITE LIME/ALKALINE FLYASH COMBUSTION ENGINEERING ENERGY CONSUMPTION: ****% STATUS 1 STARTUP 7/79	COAL CREEK 1 AND 2 ARE TWO PULVERIZED LIGNITE (0.63% S, 6258 BTU/LB) FIRED UNITS OWNED BY THE COOPERATIVE POWER ASSN AND UNITED POWER. A COLD SIDE ESP RECEIVES 2,200,000 ACFM OF FLUE GAS AND EXHAUSTS IT TO FOUR COUNTER-CURRENT SPRAY TOWERS. MIST ELIMINATION IS PROVIDED BY A BULK ENTRAINMENT SEPARATOR AND TWO CHEVRON MIST ELIMINATORS. A MINIMUM OF 40% BYPASS REHEAT IS PROVIDED BEFORE THE CLEANED GAS EXITS THE 650 FOOT ACID BRICK LINED STACK. THE TOWER DESIGN SO2 REMOVAL EFFICIENCY IS 90%. THE SYSTEM OPERATES IN AN OPEN WATER LOOP, AND THE FLYASH STABILIZED SLUDGE IS DISPOSED IN A CLAY LINED POND. UNIT 1 OPERATIONS BEGAN IN JULY 1979.
COOPERATIVE POWER ASSOCIATION COAL CREEK 2 NEW 545 MW (GROSS) 327 MW (ESC) COAL .63 %S LIGNITE LIME/ALKALINE FLYASH COMBUSTION ENGINEERING ENERGY CONSUMPTION: ****% STATUS 1 STARTUP 7/80	COAL CREEK 1 AND 2 ARE TWO PULVERIZED LIGNITE (0.63% S, 6258 BTU/LB) FIRED UNITS OWNED BY THE COOPERATIVE POWER ASSN AND UNITED POWER. A COLD SIDE ESP RECEIVES 2,200,000 ACFM OF FLUE GAS AND EXHAUSTS IT TO FOUR COUNTER-CURRENT SPRAY TOWERS. MIST ELIMINATION IS PROVIDED BY A BULK ENTRAINMENT SEPARATOR AND TWO CHEVRON MIST ELIMINATORS. A MINIMUM OF 40% BYPASS REHEAT IS PROVIDED BEFORE THE CLEANED GAS EXITS THE 650 FOOT ACID BRICK LINED STACK. THE TOWER DESIGN SO2 REMOVAL EFFICIENCY IS 90%. THE SYSTEM OPERATES IN AN OPEN WATER LOOP, AND THE FLYASH STABILIZED SLUDGE IS DISPOSED OF IN A CLAY LINED POND. UNIT 2 COMMENCED OPERATIONS IN JULY 1980.
DELMARVA POWER & LIGHT DELAWARE CITY 1 RETROFIT 60 MW (GROSS) 60 MW (ESC) COKE 7.00 %S BITUMINOUS WELLMAN LORD DAVY MCKEE ENERGY CONSUMPTION: ****% STATUS 1 STARTUP 5/80	DELAWARE CITY 1, 2, AND 3 OF DELMARVA POWER AND LIGHT ARE THREE RETRO-FITTED COKE (7-8% S) FIRED BOILERS WHICH HAVE A STEAM CAPACITY OF 500K LB/HR EACH. THE BOILERS GENERATE STEAM AS WELL AS ELECTRICITY FOR GETTY REFINING AND MARKETING. EACH BOILER SUPPLIES 295,000 ACFM OF FLUE GAS TO A MECHANICAL COLLECTOR THEN TO A VENTURI PARTICLE SCRUBBER FOR PARTICULATE CONTROL. THE FLUE GAS THEN PASSES THROUGH A CHEVRON TYPE MIST ELIMINATOR TO A WET ESP FOR BOTH PARTICULATE AND ACID MIST REMOVAL. A FOUR STAGE WELLMAN-LORD SYSTEM, WHICH IS DESIGN FOR 90% REMOVAL, IS USED FOR SO2 CON-TROL. HOT AIR INJECTION REHEAT IS USED BEFORE THE GAS EXITS OUT A 500 FT. STACK. THE EMISSION CONTROL SYSTEM IS SUPPLIED BY DAVY MCKEE. IT IS A CLOSED LOOP WATER SYSTEM. THE SYSTEM BECAME OPERATIONAL IN MAY 1980.
DELMARVA POWER & LIGHT DELAWARE CITY 2 RETROFIT 60 MW (GROSS) 60 MW (ESC) COKE 7.00 %S BITUMINOUS WELLMAN LORD DAVY MCKEE ENERGY CONSUMPTION: ****% STATUS 1 STARTUP 5/80	DELAWARE CITY 1, 2, AND 3 OF DELMARVA POWER AND LIGHT ARE THREE RETRO-FITTED COKE (7-8% S) FIRED BOILERS WHICH HAVE A STEAM CAPACITY OF 500K LB/HR EACH. THE BOILERS GENERATE STEAM AS WELL AS ELECTRICITY FOR GETTY REFINING AND MARKETING. EACH BOILER SUPPLIES 295,000 ACFM OF FLUE GAS TO A MECHANICAL COLLECTOR THEN TO A VENTURI PARTICLE SCRUBBER FOR PARTICULATE CONTROL. THE FLUE GAS THEN PASSES THROUGH A CHEVRON TYPE MIST ELIMINATOR TO A WET ESP FOR BOTH PARTICULATE AND ACID MIST REMOVAL. A FOUR STAGE WELLMAN-LORD SYSTEM, WHICH IS DESIGN FOR 90% REMOVAL, IS USED FOR SO2 CON-TROL. HOT AIR INJECTION REHEAT IS USED BEFORE THE GAS EXITS OUT A 500 FT. STACK. THE EMISSION CONTROL SYSTEM IS SUPPLIED BY DAVY MCKEE. IT IS A CLOSED LOOP WATER SYSTEM. THE SYSTEM BECAME OPERATIONAL IN MAY 1980.

SECTION 2
STATUS OF FGD SYSTEMS

UNIT IDENTIFICATION	ABSTRACT
DELMARVA POWER & LIGHT DELAWARE CITY 3 RETROFIT 60 MW (GROSS) 60 MW (ESC) COKE 7.00 %S BITUMINOUS WELLMAN LORD DAVY MCKEE ENERGY CONSUMPTION: ****% STATUS 1 STARTUP 5/80	DELAWARE CITY 1, 2, AND 3 OF DELMARVA POWER AND LIGHT ARE THREE RETROFITTED COKE (7-8% S) FIRED BOILERS WHICH HAVE A STEAM CAPACITY OF 500K LB/HR EACH. THE BOILERS GENERATE STEAM AS WELL AS ELECTRICITY FOR GETTY REFINING AND MARKETING. EACH BOILER SUPPLIES 295,000 ACFM OF FLUE GAS TO A MECHANICAL COLLECTOR THEN TO A VENTURI PARTICLE SCRUBBER FOR PARTICULATE CONTROL. THE FLUE GAS THEN PASSES THROUGH A CHEVRON TYPE MIST ELIMINATOR TO A WET ESP FOR BOTH PARTICULATE AND ACID MIST REMOVAL. A FOUR STAGE WELLMAN-LORD SYSTEM, WHICH IS DESIGN FOR 90% REMOVAL, IS USED FOR SO2 CONTROL. HOT AIR INJECTION REHEAT IS USED BEFORE THE GAS EXITS OUT A 500 FT. STACK. THE EMISSION CONTROL SYSTEM IS SUPPLIED BY DAVY MCKEE. IT IS A CLOSED LOOP WATER SYSTEM. THE SYSTEM BECAME OPERATIONAL IN MAY 1980.
DELMARVA POWER & LIGHT VIENNA 9 NEW 550 MW (GROSS) 550 MW (ESC) COAL 2.50 %S BITUMINOUS PROCESS NOT SELECTED VENDOR NOT SELECTED ENERGY CONSUMPTION: 2.7% STATUS 6 STARTUP 5/90	DELMARVA POWER AND LIGHT IS PLANNING A NEW 550 MW (GROSS) UNIT, VIENNA 9, BE CONSTRUCTED IN VIENNA, MARYLAND. THE UTILITY IS PRESENTLY CONSIDERING A LIMESTONE FGD UNIT FOR EMISSION CONTROL. THE PULVERIZED COAL FIRED UNIT WILL BURN COAL WITH AN AVERAGE SULFUR CONTENT OF 2.7% AND IS EXPECTED TO COMMENCE OPERATIONS IN MAY 1990.
DESERET GEN & TRANS BONANZA 1 NEW 410 MW (GROSS) 410 MW (ESC) COAL .50 %S BITUMINOUS LIMESTONE COMBUSTION ENGINEERING ENERGY CONSUMPTION: ****% STATUS 2 STARTUP 9/84	BONANZA (FORMERLY MOON LAKE) 1 IS A PULVERIZED COAL (.5% S, 10,500 BTU/LB) FIRED UNIT UNDER CONSTRUCTION IN VERNAL, UTAH. THE FGD SYSTEM IS BEING SUPPLIED BY COMBUSTION ENGINEERING. THE WET LIMESTONE SCRUBBING SYSTEM WILL HAVE AN SO2 REMOVAL EFFICIENCY OF 95%. THE SYSTEM WILL FEATURE A BAGHOUSE SUPPLIED BY ECOLAIRE TO REMOVE 99.6% OF THE PARTICULATE MATTER. THE UNIT WILL OPERATE IN A CLOSED WATER LOOP WITH SLUDGE DISPOSAL ON-SITE IN A LANDFILL. OPERATIONS ARE SCHEDULED TO COMMENCE IN SEPTEMBER 1984.
DESERET GEN & TRANS BONANZA 2 NEW 410 MW (GROSS) 410 MW (ESC) COAL .50 %S BITUMINOUS LIMESTONE VENDOR NOT SELECTED ENERGY CONSUMPTION: ****% STATUS 5 STARTUP 0/88	BONANZA (FORMERLY MOON LAKE) 2 IS A PULVERIZED COAL (.5% S, 10,500 BTU/LB) FIRED UNIT PLANNED BY DESERET GENERATION & TRANS. COOP TO BE LOCATED IN VERNAL, UTAH. THE UTILITY IS PRESENTLY REQUESTING BIDS FOR A WET LIMESTONE SCRUBBING SYSTEM HAVING AN SO2 REMOVAL EFFICIENCY OF 95%. THE SYSTEM WILL FEATURE A BAGHOUSE DESIGNED TO REMOVE 99.6% OF THE PARTICULATE. THE UNIT WILL OPERATE IN A CLOSED WATER LOOP WITH SLUDGE DISPOSAL ON-SITE IN A LANDFILL. OPERATIONS ARE SCHEDULED TO COMMENCE IN 1988.
DUQUESNE LIGHT ELRAMA 1-4 RETROFIT 510 MW (GROSS) 510 MW (ESC) COAL 2.20 %S LIME GE ENVIRONMENTAL SERVICES ENERGY CONSUMPTION: 3.5% STATUS 1 STARTUP 10/75	ELRAMA 1-4 OF DUQUESNE LIGHT CONSISTS OF FOUR PULVERIZED COAL (2.2% S, 11,350 BTU/LB) FIRED UNITS LOCATED IN ELRAMA, PENNSYLVANIA. THE EMISSION CONTROL SYSTEM ON THIS SITE CONSISTS OF AN ESP FOLLOWED BY A MECHANICAL COLLECTOR AND FIVE VARIABLE THROAT VENTURI LIME ABSORBER MODULES SUPPLIED BY GEESI, WHICH ARE DESIGNED TO REMOVE 83% OF THE SO2 FROM THE FLUE GAS. THE CLEANED GAS PASSES THROUGH A DIRECT OIL FIRED REHEATER BEFORE EXITING A 400 FOOT ACID BRICK LINED STACK. THE SYSTEM OPERATES IN AN OPEN WATER LOOP, AND THE POZ-O-TEC STABILIZED SLUDGE IS HAULED TO AN OFF-SITE LANDFILL. THE SYSTEM HAS BEEN OPERATIONAL SINCE OCTOBER 1975.
DUQUESNE LIGHT PHILLIPS 1-6 RETROFIT 408 MW (GROSS) 408 MW (ESC) COAL 2.05 %S BITUMINOUS LIME GE ENVIRONMENTAL SERVICES ENERGY CONSUMPTION: 3.4% STATUS 1 STARTUP 7/73	THE PHILLIPS POWER STATION OF DUQUESNE LIGHT CONSISTS OF SIX DRY BOTTOM PULVERIZED COAL (1.92% S, 11,350 BTU/LB) FIRED UNITS LOCATED IN SOUTH HEIGHT, PENNSYLVANIA. PARTICULATE CONTROL IS ACCOMPLISHED BY SIX ESP/MECHANICAL COLLECTOR COMBINATIONS (ONE/BOILER). ONE TWO STAGE AND THREE SINGLE STAGE VARIABLE THROAT VENTURI LIME FGD MODULES SUPPLIED BY GEESI ARE DESIGNED TO REMOVE 83% OF THE SO2 FROM THE FLUE GAS. TWO CHEVRON MIST ELIMINATORS/MODULE ARE FOLLOWED BY A DIRECT OIL FIRED REHEATER WHICH RAISES THE GAS TEMPERATURE BY 20 DEG F BEFORE IT LEAVES VIA A 340 FOOT TALL ACID BRICK LINED STACK. THE SYSTEM OPERATES IN AN OPEN WATER LOOP, AND THE POZ-O-TEC STABILIZED SLUDGE IS TRUCKED TO AN OFF-SITE LANDFILL. THE SYSTEM HAS BEEN OPERATIONAL SINCE JULY 1973.

SECTION 2
STATUS OF FGD SYSTEMS

UNIT IDENTIFICATION	ABSTRACT
EAST KENTUCKY POWER J.K. SMITH 1 NEW 650 MW (GROSS) 650 MW (ESC) COAL 1.50 %S BITUMINOUS LIME BABCOCK & WILCOX ENERGY CONSUMPTION: ****% STATUS 3 STARTUP 8/87	THE EAST KENTUCKY POWER COOP HAS PLANS TO FIRE TWO NEW UNITS, J.K. SMITH 1 AND 2. A CONTRACT WAS AWARDED TO BABCOCK AND WILCOX FOR A WET LIME PROCESS TO CONTROL EMISSIONS. THE SYSTEM WILL OPERATE IN A CLOSED WATER LOOP MODE. START-UP FOR UNIT 1 IS EXPECTED IN 1987.
EAST KENTUCKY POWER SPURLOCK 2 NEW 500 MW (GROSS) 500 MW (ESC) COAL 3.50 %S LIME THYSSEN/CEA ENERGY CONSUMPTION: ****% STATUS 2 STARTUP 1/83	SPURLOCK 2 OF EAST KENTUCKY POWER COOPERATIVE IS A BALANCED DRAFT PULVERIZED COAL (3.5% S, 11,000 BTU/LB) FIRED UNIT UNDER CONSTRUCTION IN MAYSVILLE, KENTUCKY. THE EMISSION CONTROL SYSTEM WILL CONSIST OF AN ESP FOLLOWED BY A THYSSEN/CEA LIME FGD SYSTEM (90% DESIGN SO2 REMOVAL EFF). FLUE GAS FROM UNIT ONE WILL BE USED TO REHEAT THE CLEANED GAS. THE CLOSED WATER LOOP SYSTEM, SLATED FOR START-UP IN 1983, WILL EMPLOY A POZ-O-TEC SLUDGE STABILIZATION FACILITY.
FLORIDA POWER & LIGHT MARTIN 3 NEW 800 MW (GROSS) 800 MW (ESC) COAL ***** %S PROCESS NOT SELECTED VENDOR NOT SELECTED ENERGY CONSUMPTION: ****% STATUS 6 STARTUP 0/87	FLORIDA POWER AND LIGHT HAS PLANS FOR TWO NEW UNITS, MARTIN 3 AND 4 TO BE LOCATED IN MARTIN COUNTY, FLORIDA. THE PULVERIZED COAL FIRED BOILERS WILL HAVE A MW RATING OF 800 EACH. THE UTILITY IS PRESENTLY CONSIDERING ONLY FGD AS THE EMISSION CONTROL STRATEGY. THE START-UP FOR UNIT 3 IS PROJECTED FOR 1987.
FLORIDA POWER & LIGHT MARTIN 4 NEW 800 MW (GROSS) 800 MW (ESC) COAL ***** %S PROCESS NOT SELECTED VENDOR NOT SELECTED ENERGY CONSUMPTION: ****% STATUS 6 STARTUP 0/89	FLORIDA POWER AND LIGHT HAS PLANS FOR TWO NEW UNITS, MARTIN 3 AND 4 TO BE LOCATED IN MARTIN COUNTY, FLORIDA. THE PULVERIZED COAL FIRED BOILERS WILL HAVE A MW RATING OF 800 EACH. THE UTILITY IS PRESENTLY CONSIDERING ONLY FGD AS THE EMISSION CONTROL STRATEGY. THE START-UP FOR UNIT 4 IS PROJECTED FOR 1989.
GENERAL PUBLIC UTILITIES COAL 1 NEW 625 MW (GROSS) 625 MW (ESC) COAL 3.50 %S PROCESS NOT SELECTED VENDOR NOT SELECTED ENERGY CONSUMPTION: ****% STATUS 5 STARTUP 5/91	GENERAL PUBLIC UTILITIES HAS PLANS TO CONSTRUCT A 625 MW UNIT, COAL 1. THE UTILITY IS PRESENTLY REQUESTING/EVALUATING BIDS FOR AN FGD SYSTEM TO CONTROL EMISSIONS. THE COAL FIRED (3.5% S) UNIT IS SCHEDULED TO COMMENCE OPERATIONS IN MAY 1991.
GENERAL PUBLIC UTILITIES COAL 2 NEW 625 MW (GROSS) 625 MW (ESC) COAL 3.50 %S PROCESS NOT SELECTED VENDOR NOT SELECTED ENERGY CONSUMPTION: ****% STATUS 6 STARTUP 5/93	GENERAL PUBLIC UTILITIES IS PLANNING TO CONSTRUCT A 625 MW UNIT, COAL 2. THE UTILITY IS PRESENTLY CONSIDERING ONL FGD AS THE EMISSION CONTROL STRATEGY. THE COAL FIRED (3.5% S) UNIT IS SCHEDULED TO COMMENCE OPERATIONS IN 1993.

SECTION 2
STATUS OF FGD SYSTEMS

UNIT IDENTIFICATION	ABSTRACT
GENERAL PUBLIC UTILITIES COAL 3 NEW 625 MW (GROSS) 625 MW (ESC) COAL 3.50 %S PROCESS NOT SELECTED VENDOR NOT SELECTED ENERGY CONSUMPTION: ****% STATUS 6 STARTUP 5/95	GENERAL PUBLIC UTILITIES IS PLANNING TO CONSTRUCT A 625 MW UNIT, COAL 3. THE UTILITY IS PRESENTLY CONSIDERING ONLY FGD AS THE EMISSION CONTROL STRATEGY. THE COAL FIRED (3.5% S) UNIT IS SCHEDULED TO COMMENCE OPERATIONS IN 1995.
GENERAL PUBLIC UTILITIES COAL 4 NEW 625 MW (GROSS) 625 MW (ESC) COAL 3.50 %S PROCESS NOT SELECTED VENDOR NOT SELECTED ENERGY CONSUMPTION: ****% STATUS 6 STARTUP 5/96	GENERAL PUBLIC UTILITIES HAS PLANS TO CONSTRUCT A 625 MW UNIT, COAL 4. THE UTILITY IS PRESENTLY CONSIDERING ONLY FGD AS THE EMISSION CONTROL STRATEGY. THE COAL FIRED (3.5% S) UNIT IS SCHEDULED TO COMMENCE OPERATIONS IN 1996.
GENERAL PUBLIC UTILITIES SEWARD 7 NEW 690 MW (GROSS) 690 MW (ESC) COAL ***** %S PROCESS NOT SELECTED VENDOR NOT SELECTED ENERGY CONSUMPTION: 9.4% STATUS 5 STARTUP 5/89	GENERAL PUBLIC UTILITIES IS PLANNING A NEW UNIT, SEWARD 7, TO BE BUILT IN SEWARD, PENNSYLVANIA. THE UTILITY IS PRESENTLY REQUESTING BIDS FOR AN FGD SYSTEM, WITH NON-SLURRY TYPE LIME AND LIMESTONE SYSTEMS BEING THE PRIMARY CONSIDERATION. START-UP IS EXPECTED IN MAY 1989.
GRAND HAVEN BRD OF LIGHT & PWR J.B. SIMS 3 NEW 65 MW (GROSS) 65 MW (ESC) COAL 2.75 %S BITUMINOUS LIME BABCOCK & WILCOX ENERGY CONSUMPTION: ****% STATUS 2 STARTUP 1/83	THE GRAND HAVEN BOARD OF LIGHT AND POWER'S J.B. SIMS 3 IS A BITUMINIOUS COAL (2.75% S, 11,000 BTU/LB) FIRED BOILER UNDER CONSTRUCTION IN GRAND HAVEN, MICHIGAN. A CONTRACT HAS BEEN AWARDED TO BABCOCK AND WILCOX TO SUPPLY TWO SPRAY TOWERS TO CONTROL SO2 EMISSIONS. EACH SCRUBBER SYSTEM WILL UTILIZE A CHEVRON MIST ELIMINATOR AND AN IN-LINE REHEATER. THE SYSTEM WILL OPERATE IN A CLOSED WATER LOOP MODE AND THE SLUDGE WILL BE DISPOSED OF IN AN OFF-SITE LANDFILL. START-UP IS SCHEDULED FOR JAN. 1983.
HOOSIER ENERGY MEROM 1 NEW 490 MW (GROSS) 441 MW (ESC) COAL 3.50 %S LIMESTONE MITSUBISHI HEAVY INDUSTRIES ENERGY CONSUMPTION: ****% STATUS 2 STARTUP 5/82	MEROM 1 AND 2 ARE TWO NEW UNITS BEING BUILT BY HOOSIER ENERGY IN SULLIVAN, INDIANA. THESE PULVERIZED COAL (3.5% S) FIRED UNITS WILL PRODUCE 1,732,000 ACFM OF FLUE GAS WHICH WILL BE CLEANED BY A COLD SIDE ESP UPSTREAM OF A MITSUBISHI LIMESTONE GRID TOWER ABSORBER (90% DESIGN SO2 REMOVAL). THE SYSTEM WILL UTILIZE BYPASS REHEAT AND A 700 FOOT STACK. THE SLUDGE WILL BE STABILIZED AND LANDFILLED, AND THE SYSTEM WILL OPERATE IN A CLOSED WATER LOOP MODE. START-UP OF UNIT 1 IS SCHEDULED FOR MAY 1982.
HOOSIER ENERGY MEROM 2 NEW 490 MW (GROSS) 441 MW (ESC) COAL 3.50 %S LIMESTONE MITSUBISHI HEAVY INDUSTRIES ENERGY CONSUMPTION: ****% STATUS 1 STARTUP 12/81	MEROM 2 IS A NEW UNIT BUILT BY HOOSIER ENERGY IN SULLIVAN, INDIANA. THIS PULVERIZED COAL (3.5% S) FIRED UNIT PRODUCES 866,000 ACFM OF FLUE GAS WHICH IS BEING CLEANED BY A COLD SIDE ESP UPSTREAM OF A MITSUBISHI LIMESTONE GRID TOWER ABSORBER (90% DESIGN SO2 REMOVAL). THE SYSTEM UTILIZES BYPASS REHEAT AND A 700 FOOT STACK. THE SLUDGE IS BEING STABILIZED AND LANDFILLED, AND THE SYSTEM OPERATES IN A CLOSED WATER LOOP MODE. UNIT 2 COMMENCED OPERATIONS IN DECEMBER 1981.

SECTION 2
STATUS OF FGD SYSTEMS

UNIT IDENTIFICATION	ABSTRACT
HOUSTON LIGHTING & POWER LIMESTONE 1 NEW 750 MW (GROSS) 750 MW (ESC) COAL 1.08 %S LIGNITE LIMESTONE COMBUSTION ENGINEERING ENERGY CONSUMPTION: ****% STATUS 3 STARTUP 12/86	HOUSTON LIGHTING AND POWER CO HAS PLANS FOR TWO NEW UNITS, LIMESTONE 1 AND 2, TO BE LOCATED IN JEWITT, TEXAS. THE PULVERIZED COAL (1.08% S, 6177 BTU/LB) FIRED BOILER WILL UTILIZE A WET LIMESTONE SCRUBBING PROCESS FOR PRIMARY SO2 COLLECTION. A COLD SIDE ESP WILL ALSO BE USED FOR PRIMARY PARTICLE CONTROL. THE UTILITY HAS AWARDED A CONTRACT TO COMBUSTION ENGINEERING FOR THE INSTALLATION OF THIS SYSTEM. UNIT 1 IS SCHEDULED TO COMMENCE OPERATIONS IN 1986.
HOUSTON LIGHTING & POWER LIMESTONE 2 NEW 750 MW (GROSS) 750 MW (ESC) COAL 1.08 %S LIMESTONE COMBUSTION ENGINEERING ENERGY CONSUMPTION: ****% STATUS 3 STARTUP 12/87	HOUSTON LIGHTING AND POWER CO HAS PLANS FOR TWO NEW UNITS, LIMESTONE 1 AND 2, TO BE LOCATED IN JEWITT, TEXAS. THE PULVERIZED COAL (1.08% S, 6177 BTU/LB) FIRED BOILER WILL UTILIZE A WET LIMESTONE SCRUBBING PROCESS FOR PRIMARY SO2 COLLECTION. A COLD SIDE ESP WILL BE USED FOR PRIMARY PARTICLE CONTROL. THE UTILITY HAS AWARDED A CONTRACT TO COMBUSTION ENGINEERING FOR THE INSTALLATION OF THIS SYSTEM. UNIT 2 IS SCHEDULED TO COMMENCE OPERATIONS IN 1987.
HOUSTON LIGHTING & POWER W.A. PARISH 8 NEW 600 MW (GROSS) 492 MW (ESC) COAL .60 %S SUBBITUMINOUS LIMESTONE GE ENVIRONMENTAL SERVICES ENERGY CONSUMPTION: ****% STATUS 2 STARTUP 11/82	W.A. PARISH 8 OF HOUSTON LIGHTING & POWER IS A PULVERIZED COAL (0.6% S, 8700 BTU/LB) FIRED UNIT UNDER CONSTRUCTION IN THOMPSONS, TEXAS. GEESI WILL SUPPLY A LIMESTONE FGD SYSTEM WHICH WILL REMOVE 82% OF THE FLUE GAS SO2. REHEAT WILL BE PROVIDED BY BYPASSING 18% OF THE PARTICULATE CLEANED FLUE GAS. SLUDGE WILL BE DEWATERED, BLENDED WITH FLYASH, AND DISPOSED OF IN AN ON-SITE LANDFILL. OPERATIONS ARE SCHEDULED TO COMMENCE IN NOVEMBER 1982.
INDIANAPOLIS POWER & LIGHT PATRIOT 1 NEW 650 MW (GROSS) 650 MW (ESC) COAL 3.50 %S LIMESTONE VENDOR NOT SELECTED ENERGY CONSUMPTION: ****% STATUS 6 STARTUP 0/87	INDIANAPOLIS POWER AND LIGHT HAS PLANS FOR THREE NEW UNITS, PATRIOT 1, 2, AND 3, TO BE LOCATED IN PATRIOT, INDIANA. THE UTILITY PLANS ON UTILIZING A LIMESTONE FGD PROCESS FOR EMISSION CONTROL.
INDIANAPOLIS POWER & LIGHT PATRIOT 2 NEW 650 MW (GROSS) 650 MW (ESC) COAL 3.50 %S LIMESTONE VENDOR NOT SELECTED ENERGY CONSUMPTION: ****% STATUS 6 STARTUP 0/ 0	INDIANAPOLIS POWER AND LIGHT HAS PLANS FOR THREE NEW UNITS, PATRIOT 1, 2, AND 3, TO BE LOCATED IN PATRIOT, INDIANA. THE UTILITY PLANS TO UTILIZE A LIMESTONE FGD PROCESS FOR EMISSION CONTROL.
INDIANAPOLIS POWER & LIGHT PATRIOT 3 NEW 650 MW (GROSS) 650 MW (ESC) COAL 3.50 %S LIMESTONE VENDOR NOT SELECTED ENERGY CONSUMPTION: ****% STATUS 6 STARTUP 0/ 0	INDIANAPOLIS POWER AND LIGHT HAS PLANS FOR THREE NEW UNITS, PATRIOT 1, 2, AND 3, TO BE LOCATED IN PATRIOT, INDIANA. THE UTILITY PLANS ON UTILIZING A LIMESTONE FGD PROCESS FOR EMISSION CONTROL.

SECTION 2
STATUS OF FGD SYSTEMS

UNIT IDENTIFICATION	ABSTRACT
INDIANAPOLIS POWER & LIGHT PETERSBURG 3 NEW 532 MW (GROSS) 532 MW (ESC) COAL 3.25 %S BITUMINOUS LIMESTONE AIR CORRECTION DIVISION, UOP ENERGY CONSUMPTION: 2.4% STATUS 1 STARTUP 12/77	PETERSBURG 3 OF INDIANAPOLIS POWER AND LIGHT IS LOCATED IN PETERSBURG, INDIANA, AND BURNS 3.25% S BITUMINOUS COAL (11,000 BTU/LB). TWO COLD SIDE ESP'S ARE LOCATED UPSTREAM OF FOUR 85% EFFICIENT UOP LIMESTONE TCA MODULES. A HORIZONTAL MIST ELIMINATOR PRECEDES AN INDIRECT HOT AIR REHEATER THAT BOOSTS THE GAS TEMPERATURE BY 30 DEG F BEFORE IT EXITS THE 616 FOOT RIGIFLAKE 4850 LINED STACK. STABILIZED SLUDGE IS DISPOSED OF IN AN ON-SITE POND, AND THE SYSTEM OPERATES IN A CLOSED WATER LOOP MODE. THIS THIS UNIT HAS BEEN OPERATIONAL SINCE DECEMBER 1977.
INDIANAPOLIS POWER & LIGHT PETERSBURG 4 NEW 530 MW (GROSS) 530 MW (ESC) COAL 3.50 %S BITUMINOUS LIMESTONE RESEARCH-COTTRELL ENERGY CONSUMPTION: 2.1% STATUS 2 STARTUP 10/84	PETERSBURG 4 OF INDIANAPOLIS POWER AND LIGHT IS A BITUMINOUS COAL (3.50% S 11,000 BTU/LB) FIRED BOILER UNDER CONSTRUCTION IN PETERSBURG, INDIANA. THE LIMESTONE FGD SYSTEM FOR THIS UNIT WILL BE SUPPLIED BY RESEARCH COTTRELL. THE SYSTEM WILL OPERATE IN A CLOSED WATER LOOP, AND SLUDGE WILL BE POZ-O-TEC STABILIZED BEFORE PONDING. START-UP IS SLATED FOR OCTOBER 1984.
IOWA ELECTRIC LIGHT & PWR GUTHRIE CO. 1 NEW 720 MW (GROSS) 720 MW (ESC) COAL .40 %S SUBBITUMINOUS LIMESTONE COMBUSTION ENGINEERING ENERGY CONSUMPTION: ****% STATUS 4 STARTUP 11/87	IOWA ELECTRIC LIGHT AND POWER HAS PLANS TO CONSTRUCT A 720 MW UNIT, GUTHRIE COUNTY 1, TO BE LOCATED IN PANORA, IOWA. A LETTER OF INTENT WAS SIGNED WITH COMBUSTION ENGINEERING TO PROVIDE A WET LIMESTONE FGD SYSTEM TO CONTROL SO2 EMISSIONS FROM THE PULVERIZED COAL (0.4% S, 8180 BTU/LB) FIRED BOILER. AN ESP IS TO BE USED FOR PARTICULATE MATTER REMOVAL. THE CLEANED FLUE GAS WILL EXIT A 650 FOOT STACK. OPERATIONS ARE SCHEDULED TO COMMENCE IN NOVEMBER 1987.
JACKSONVILLE ELEC AUTHORITY ST.JOHNS RIVER PWR PARK 1 NEW 600 MW (GROSS) 600 MW (ESC) COAL 2.50 %S LIMESTONE VENDOR NOT SELECTED ENERGY CONSUMPTION: ****% STATUS 5 STARTUP 12/85	THE JACKSONVILLE ELECTRIC AUTHORITY HAS PLANS FOR TWO NEW UNITS, ST. JOHNS RIVER POWER PARK 1 AND 2, TO BE LOCATED IN EAST PORT, FLORIDA. EACH UNIT WILL BURN PULVERIZED COAL (2-4% S) AND SUPPLY 2,660,000 ACFM TO A WET LIMESTONE FGD PROCESS AND AN ESP FOR EMISSION CONTROL. THE UTILITY IS CURRENTLY EVALUATING BIDS FOR THE CONTROL SYSTEMS. THE CLEANED FLUE GAS IS TO EXIT A 285 FOOT STACK. UNIT 1 IS SCHEDULED TO COMMENCE OPERATIONS IN 1985.
JACKSONVILLE ELEC AUTHORITY ST.JOHNS RIVER PWR PARK 2 NEW 600 MW (GROSS) 600 MW (ESC) COAL 2.50 %S LIMESTONE VENDOR NOT SELECTED ENERGY CONSUMPTION: ****% STATUS 5 STARTUP 6/87	THE JACKSONVILLE ELECTRIC AUTHORITY HAS PLANS FOR TWO NEW UNITS, ST. JOHNS RIVER POWER PARK 1 AND 2, TO BE LOCATED IN EAST PORT, FLORIDA. EACH UNIT WILL BURN PULVERIZED COAL (2-4% S) AND SUPPLY 2,660,000 ACFM TO A WET LIMESTONE FGD PROCESS AND AN ESP FOR EMISSION CONTROL. THE UTILITY IS CURRENTLY EVALUATING BIDS FOR THE CONTROL SYSTEMS. THE CLEANED FLUE GAS IS TO EXIT A 285 FOOT STACK. UNIT 2 IS SCHEDULED TO COMMENCE OPERATIONS IN 1987.
KANSAS CITY POWER & LIGHT HAWTHORN 3 RETROFIT 90 MW (GROSS) 90 MW (ESC) COAL .60 %S BITUMINOUS LIME COMBUSTION ENGINEERING ENERGY CONSUMPTION: 2.2% STATUS 1 STARTUP 11/72	HAWTHORN 3 OF KANSAS CITY POWER AND LIGHT IS A DRY BOTTOM PULVERIZED BITUMINOUS COAL (0.6% S, 9800 BTU/LB) FIRED UNIT LOCATED IN KANSAS CITY, MISSOURI, WHICH WAS CONVERTED FROM LIMESTONE FURNACE INJECTION AND TAIL END SCRUBBING TO A LIME SLURRY SYSTEM. TWO COMBUSTION ENGINEERING MARBLE BED ABSORBERS, WHICH WERE DESIGNED TO REMOVE 70% OF THE FLUE GAS SO2, BEGAN OPERATION IN JANUARY 1977. ONE HORIZONTAL CHEVRON MIST ELIMINATOR PER MODULE IS LOCATED UPSTREAM OF AN IN-LINE FINNED TUBE REHEATER, WHICH RAISES THE TEMPERATURE OF THE CLEANED GAS BEFORE IT EXITS THROUGH A GUNITE LINED 200 FOOT STACK. THE FLYASH STABILIZED SLUDGE IS DEPOSITED IN AN UNLINED SLUDGE POND. THE SYSTEM OPERATES IN A CLOSED WATER LOOP MODE.

SECTION 2
STATUS OF FGD SYSTEMS

UNIT IDENTIFICATION	ABSTRACT
KANSAS CITY POWER & LIGHT HAWTHORN 4 RETROFIT 90 MW (GROSS) 90 MW (ESC) COAL .60 %S BITUMINOUS LIME COMBUSTION ENGINEERING ENERGY CONSUMPTION: 2.2% STATUS 1 STARTUP 8/72	HAWTHORN 4 OF KANSAS CITY POWER AND LIGHT IS A DRY BOTTOM PULVERIZED BITUMINOUS COAL (0.6% S, 9800 BTU/LB) FIRED UNIT LOCATED IN KANSAS CITY, MISSOURI, WHICH WAS CONVERTED FROM LIMESTONE FURNACE INJECTION AND TAIL END SCRUBBING TO A LIME SLURRY SYSTEM. TWO COMBUSTION ENGINEERING MARBLE BED ABSORBERS, WHICH WERE DESIGNED TO REMOVE 70% OF THE FLUE GAS SO2, BEGAN OPERATION IN JANUARY 1977. ONE HORIZONTAL CHEVRON MIST ELIMINATOR PER MODULE IS LOCATED UPSTREAM OF AN IN-LINE FINNED TUBE REHEATER, WHICH RAISES THE TEMPERATURE OF THE CLEANED GAS BEFORE IT EXITS THROUGH A GUNITE LINED 200 FOOT STACK. THE FLYASH STABILIZED SLUDGE IS DEPOSITED IN AN UNLINED SLUDGE POND. THE SYSTEM OPERATES IN A CLOSED WATER LOOP MODE.
KANSAS CITY POWER & LIGHT LA CYGNE 1 NEW 874 MW (GROSS) 874 MW (ESC) COAL 5.39 %S SUBBITUMINOUS LIMESTONE BABCOCK & WILCOX ENERGY CONSUMPTION: 3.2% STATUS 1 STARTUP 2/73	LA CYGNE 1 IS A WET BOTTOM, CYCLONE FIRED PULVERIZED SUBBITUMINOUS COAL (5.39% S, 9421 BTU/LB) FIRED UNIT OF KANSAS CITY POWER AND LIGHT, LOCATED IN LA CYGNE, KANSAS. THE EMISSION CONTROL SYSTEM CONSISTS OF EIGHT VARIABLE THROAT VENTURI/LIMESTONE SIEVE TRAY TOWER TRAINS SUPPLIED BY BABCOCK AND WILCOX. EACH 80% (SO2 REMOVAL, DESIGN) EFFICIENT TRAIN IS FOLLOWED BY A COMBINATION SIEVE TRAY AND CHEVRON MIST ELIMINATOR, AND AN INDIRECT REHEATER. THE CLEANED GAS EXITS THROUGH A 700 FOOT STEEL LINED STACK. THE SYSTEM OPERATES IN A CLOSED WATER LOOP, AND THE SCRUBBER SLUDGE IS DISPOSED IN AN UNLINED POND. INITIAL OPERATIONS OF THE FGD SYSTEM BEGAN IN FEBRUARY 1973.
KANSAS POWER & LIGHT JEFFREY 1 NEW 720 MW (GROSS) 540 MW (ESC) COAL .32 %S LIMESTONE COMBUSTION ENGINEERING ENERGY CONSUMPTION: ****% STATUS 1 STARTUP 8/78	KANSAS CITY POWER AND LIGHT'S JEFFREY 1 IS A TANGENTIAL FIRED PULVERIZED COAL (0.32% S, 8125 BTU/LB) UNIT IN WAMEGO, KANSAS. THE EMISSION CONTROL SYSTEM FOR THIS UNIT CONSISTS OF A COLD SIDE ESP FOLLOWED BY SIX (ONE SPARE) LIMESTONE SPRAY TOWER MODULES SUPPLIED BY COMBUSTION ENGINEERING. THE DESIGN SO2 REMOVAL EFFICIENCY IS 50% (INCLUDING A 30% BYPASS REHEAT). THE UNIT HAS BEEN OPERATIONAL SINCE AUGUST 1978.
KANSAS POWER & LIGHT JEFFREY 2 NEW 700 MW (GROSS) 490 MW (ESC) COAL .30 %S LIMESTONE COMBUSTION ENGINEERING ENERGY CONSUMPTION: ****% STATUS 1 STARTUP 1/80	UNIT 2, PRESENTLY OPERATING AT KANSAS POWER AND LIGHT'S JEFFREY ENERGY CENTER IN JEFFREY, KANSAS, BURNS 0.3% S PULVERIZED COAL (8100 BTU/LB). THIS UNIT'S EMISSION CONTROL SYSTEM CONSISTS OF A COLD SIDE ESP AND COMBUSTION ENGINEERING LIMESTONE SPRAY TOWERS. A 30% FLUE GAS BYPASS PROVIDES REHEAT OF THE CLEANED GAS BEFORE IT EXITS THROUGH A 600 FOOT STACK. THE SYSTEM OPERATES IN A CLOSED WATER LOOP MODE, AND THE SLUDGE IS STABILIZED WITH BOTTOM ASH AND PIPED TO AN ON-SITE CLAY LINED POND. INITIAL OPERATIONS COMMENCED IN APRIL 1980.
KANSAS POWER & LIGHT LAWRENCE 4 RETROFIT 125 MW (GROSS) 125 MW (ESC) COAL .55 %S LIMESTONE COMBUSTION ENGINEERING ENERGY CONSUMPTION: ****% STATUS 1 STARTUP 1/77	LAWRENCE 4 OF KANSAS POWER AND LIGHT IS A BALANCED DRAFT, TANGENTIAL FIRED PULVERIZED COAL (0.55% S, 10,000 BTU/LB) UNIT LOCATED IN LAWRENCE, KANSAS. A NEW COMBUSTION ENGINEERING LIMESTONE ROD DECK/SPRAY TOWER SYSTEM REPLACED THE EXISTING MARBLE BED TAIL END SCRUBBER IN JANUARY 1977. THE SYSTEM TREATS 403,000 ACFM OF FLUE GAS, WITH A DESIGN SO2 REMOVAL OF 73%. MIST ELIMINATION IS ACCOMPLISHED BY TWO CHEVRONS AND ONE BULK ENTRAINMENT SEPARATOR FOLLOWING EACH OF THE TWO MODULES. A FINNED TUBE REHEATER BOOSTS THE TEMPERATURE OF THE CLEANED GAS BY 20 DEG F BEFORE IT IS EXHAUSTED THROUGH A 120 FOOT STACK. THE SLUDGE IS DISPOSED IN AN UNLINED INTERIM POND, WHICH OVERFLOWS INTO A FINAL DISPOSAL POND. THE SYSTEM OPERATES IN A CLOSED WATER LOOP.
KANSAS POWER & LIGHT LAWRENCE 5 RETROFIT 420 MW (GROSS) 420 MW (ESC) COAL .55 %S LIMESTONE COMBUSTION ENGINEERING ENERGY CONSUMPTION: ****% STATUS 1 STARTUP 4/78	LAWRENCE 5 OF KANSAS POWER AND LIGHT IS A BALANCED DRAFT, TANGENTIAL FIRED PULVERIZED COAL (0.55% S, 10,000 BTU/LB) UNIT LOCATED IN LAWRENCE, KANSAS. A NEW COMBUSTION ENGINEERING LIMESTONE ROD DECK/SPRAY TOWER SYSTEM REPLACED THE EXISTING MARBLE BED TAIL END SCRUBBER IN APRIL 1978. THE SYSTEM TREATS 403,000 ACFM OF FLUE GAS, WITH A DESIGN SO2 REMOVAL OF 73%. MIST ELIMINATION IS ACCOMPLISHED BY TWO CHEVRONS AND ONE BULK ENTRAINMENT SEPARATOR FOLLOWING EACH OF THE TWO MODULES. A FINNED TUBE REHEATER BOOSTS THE TEMPERATURE OF THE CLEANED GAS BY 20 DEG F BEFORE IT IS EXHAUSTED THROUGH A 120 FOOT STACK. THE SLUDGE IS DISPOSED IN AN UNLINED INTERIM POND, WHICH OVERFLOWS INTO A FINAL DISPOSAL POND. THE SYSTEM OPERATES IN A CLOSED WATER LOOP.

SECTION 2
STATUS OF FGD SYSTEMS

UNIT IDENTIFICATION	ABSTRACT
KENTUCKY UTILITIES GREEN RIVER 1-3 RETROFIT 64 MW (GROSS) 64 MW (ESC) COAL 4.00 %S BITUMINOUS LIME AMERICAN AIR FILTER ENERGY CONSUMPTION: 3.1% STATUS 1 STARTUP 9/75	GREEN RIVER 1-3 OF KENTUCKY UTILITIES ARE THREE DRY BOTTOM PULVERIZED BITUMINOUS COAL (4% S, 11,000 BTU/LB) FIRED UNITS LOCATED IN CENTRAL CITY, KENTUCKY. EACH BOILER SUPPLIES 360,000 ACFM OF FLUE GAS TO A VARIABLE THROAT VENTURI FOLLOWED BY AN AMERICAN AIR FILTER LIME MOBILE BED CONTACTOR (80% DESIGN SO2 REMOVAL EFFICIENCY). A RADIAL VANE MIST ELIMINATOR IS FOLLOWED BY A STEAM TUBE REHEATER AND A 165 FOOT STACK. SLUDGE IS DISPOSED IN AN ON-SITE UNLINED POND, AND THE SYSTEM OPERATES IN A CLOSED WATER LOOP. THE SYSTEM HAS BEEN OPERATIONAL SINCE SEPTEMBER 1975.
KENTUCKY UTILITIES HANCOCK 1 NEW 708 MW (GROSS) 650 MW (ESC) COAL 3.50 %S BITUMINOUS LIMESTONE BABCOCK & WILCOX ENERGY CONSUMPTION: ****% STATUS 4 STARTUP 4/89	KENTUCKY UTILITIES HAS PLANS TO CONSTRUCT TWO NEW 650 MW (NET) PULVERIZED COAL (3.5% S, 10,500 BTU/LB) FIRED BOILERS. THE UNITS, HANCOCK 1 AND 2, ARE TO BE LOCATED IN HAWESVILLE, KENTUCKY. THE UTILITY HAS SIGNED A LETTER OF INTENT WITH B & W FOR A WET LIMESTONE SCRUBBING SYSTEM WHICH WILL OPERATE IN A CLOSED WATER LOOP MODE TO CONTROL EMISSIONS. HANCOCK 1 AND 2 ARE SCHEDULED TO COMMENCE OPERATION IN 1989 AND 1994, RESPECTIVELY.
KENTUCKY UTILITIES HANCOCK 2 NEW 708 MW (GROSS) 650 MW (ESC) COAL 3.50 %S BITUMINOUS LIMESTONE VENDOR NOT SELECTED ENERGY CONSUMPTION: ****% STATUS 6 STARTUP 4/94	KENTUCKY UTILITIES HAS PLANS TO CONSTRUCT TWO NEW 650 MW (NET) PULVERIZED COAL (3.5% S, 10,500 BTU/LB) FIRED BOILERS. THE UNITS, HANCOCK 1 AND 2, ARE TO BE LOCATED IN HAWESVILLE, KENTUCKY. THE UTILITY IS PRESENTLY INVESTIGATING A WET LIMESTONE SCRUBBING SYSTEM WHICH WILL OPERATE IN A CLOSED WATER LOOP MODE TO CONTROL EMISSIONS. HANCOCK 1 AND 2 ARE SCHEDULED TO COMMENCE OPERATION IN 1988 AND 1994, RESPECTIVELY.
LAKELAND UTILITIES MCINTOSH 3 NEW 364 MW (GROSS) 364 MW (ESC) COAL 2.56 %S BITUMINOUS LIMESTONE BABCOCK & WILCOX ENERGY CONSUMPTION: ****% STATUS 2 STARTUP 1/82	MCINTOSH 3 OF LAKELAND UTILITIES IS BEING CONSTRUCTED IN LAKELAND, FLORIDA. BABCOCK AND WILCOX HAS BEEN AWARDED A CONTRACT TO SUPPLY AN 85% EFFICIENT (SO2) LIMESTONE FGD SYSTEM FOR THIS UNIT. THE EMISSION CONTROL SYSTEM WILL CONSIST OF A COLD SIDE ESP FOLLOWED BY TWO PARALLEL FGD MODULES AND A 250 FOOT ACID BRICK LINED STACK. THE SYSTEM WILL OPERATE IN A CLOSED WATER LOOP, AND THE POZ-O-TEC STABILIZED SLUDGE WILL BE USED AS A CONSTRUCTION BASE. CONSTRUCTION BEGAN IN NOVEMBER 1979 AND START-UP IS SCHEDULED TO BE IN JANUARY 1982.
LANSING BOARD OF WATER & LIGHT ERICKSON 2 NEW 160 MW (GROSS) 160 MW (ESC) COAL ***** %S PROCESS NOT SELECTED VENDOR NOT SELECTED ENERGY CONSUMPTION: ****% STATUS 6 STARTUP 1/87	THE ERICKSON 2 STATION OF THE LANSING BOARD OF WATER AND LIGHT IS A PLANNED UNIT TO BE LOCATED IN DELTA TOWNSHIP, MICHIGAN. THE UNIT WILL HAVE A MW RATING OF BETWEEN 160 AND 250, DEPENDING ON WHETHER OTHER MUNICIPALITIES WILL JOIN IN THIS PROJECT. THE UTILITY IS PRESENTLY CONSIDERING THE USE OF FGD FOR EMISSION CONTROL. OPERATIONS ARE SCHEDULED TO COMMENCE IN 1987.
LOS ANGELES DEPT OF WTR & PWR INTERMOUNTAIN 1 NEW 820 MW (GROSS) 820 MW (ESC) COAL .79 %S SUBBITUMINOUS LIME VENDOR NOT SELECTED ENERGY CONSUMPTION: ****% STATUS 6 STARTUP 0/86	THE LOS ANGELES DEPARTMENT OF WATER AND POWER HAS PLANS FOR FOUR NEW BOILERS, INTERMOUNTAIN 1, 2, 3 AND 4, TO BE LOCATED IN DELTA, UTAH. EACH 820 MW BOILER WILL FIRE PULVERIZED COAL (0.79% S, 10,200 BTU/LB) AND WILL SUPPLY 5,400,000 ACFM OF FLUE GAS TO A WET LIME SCRUBBING SYSTEM. A HORIZONTAL WEIR TYPE SCRUBBER ALONG WITH A HOT SIDE ESP IS UNDER CONSIDERATION BY THE UTILITY FOR EMISSION CONTROL. THE CLEANED FLUE GAS WILL EXIT A 750 FOOT STACK. UNIT 1 IS SCHEDULED TO COMMENCE OPERATIONS IN 1986.

SECTION 2
STATUS OF FGD SYSTEMS

UNIT IDENTIFICATION	ABSTRACT
LOS ANGELES DEPT OF WTR & PWR INTERMOUNTAIN 2 NEW 820 MW (GROSS) 820 MW (ESC) COAL .79 %S SUBBITUMINOUS LIME VENDOR NOT SELECTED ENERGY CONSUMPTION: ****% STATUS 6 STARTUP 0/87	THE LOS ANGELES DEPARTMENT OF WATER AND POWER HAS PLANS FOR FOUR NEW BOILERS, INTERMOUNTAIN 1, 2, 3 AND 4, TO BE LOCATED IN DELTA, UTAH. EACH 820 MW BOILER WILL FIRE PULVERIZED COAL (0.79% S, 10,200 BTU/LB) AND WILL SUPPLY 5,400,000 ACFM OF FLUE GAS TO A WET LIME SCRUBBING SYSTEM. A HORIZONTAL WEIR TYPE SCRUBBER ALONG WITH A HOT SIDE ESP IS UNDER CONSIDERATION BY THE UTILITY FOR EMISSION CONTROL. THE CLEANED FLUE GAS WILL EXIT A 750 FOOT STACK. UNIT 2 IS SCHEDULED TO COMMENCE OPERATIONS IN 1987.
LOS ANGELES DEPT OF WTR & PWR INTERMOUNTAIN 3 NEW 820 MW (GROSS) 820 MW (ESC) COAL .79 %S SUBBITUMINOUS LIME VENDOR NOT SELECTED ENERGY CONSUMPTION: ****% STATUS 6 STARTUP 0/88	THE LOS ANGELES DEPARTMENT OF WATER AND POWER HAS PLANS FOR FOUR NEW BOILERS, INTERMOUNTAIN 1, 2, 3 AND 4, TO BE LOCATED IN DELTA, UTAH. EACH 820 MW BOILER WILL FIRE PULVERIZED COAL (0.79% S, 10,200 BTU/LB) AND WILL SUPPLY 5,400,000 ACFM OF FLUE GAS TO A WET LIME SCRUBBING SYSTEM. A HORIZONTAL WEIR TYPE SCRUBBER ALONG WITH A HOT SIDE ESP IS UNDER CONSIDERATION BY THE UTILITY FOR EMISSION CONTROL. THE CLEANED FLUE GAS WILL EXIT A 750 FOOT STACK. UNIT 3 IS SCHEDULED TO COMMENCE OPERATIONS IN 1988.
LOS ANGELES DEPT OF WTR & PWR INTERMOUNTAIN 4 NEW 820 MW (GROSS) 820 MW (ESC) COAL .79 %S SUBBITUMINOUS LIME VENDOR NOT SELECTED ENERGY CONSUMPTION: ****% STATUS 6 STARTUP 0/89	THE LOS ANGELES DEPARTMENT OF WATER AND POWER HAS PLANS FOR FOUR NEW BOILERS, INTERMOUNTAIN 1, 2, 3 AND 4, TO BE LOCATED IN DELTA, UTAH. EACH 820 MW BOILER WILL FIRE PULVERIZED COAL (0.79% S, 10,200 BTU/LB) AND WILL SUPPLY 5,400,000 ACFM OF FLUE GAS TO A WET LIME SCRUBBING SYSTEM. A HORIZONTAL WEIR TYPE SCRUBBER ALONG WITH A HOT SIDE ESP IS UNDER CONSIDERATION BY THE UTILITY FOR EMISSION CONTROL. THE CLEANED FLUE GAS WILL EXIT A 750 FOOT STACK. UNIT 4 IS SCHEDULED TO COMMENCE OPERATIONS IN 1989.
LOUISVILLE GAS & ELECTRIC CANE RUN 4 RETROFIT 188 MW (GROSS) 188 MW (ESC) COAL 3.75 %S BITUMINOUS LIME AMERICAN AIR FILTER ENERGY CONSUMPTION: 1.6% STATUS 1 STARTUP 8/76	UNIT 4 AT LOUISVILLE GAS AND ELECTRIC'S CANE RUN STATION IS A PULVERIZED BITUMINOUS COAL (3.75% S, 11,500 BTU/LB) FIRED UNIT IN LOUISVILLE, KENTUCKY. AN ESP AND TWO AMERICAN AIR FILTER CARBIDE LIME MOBILE BED ABSORBER MODULES (85% DESIGN SO2 REMOVAL) TREAT 734,000 ACFM OF FLUE GAS FROM THE BOILER. TWO CHEVRON MIST ELIMINATORS/MODULE ARE FOLLOWED BY A DIRECT COMBUSTION REHEATER AND A 250 FOOT STACK. THE WATER LOOP IS OPEN, AND THE SLUDGE IS DISPOSED IN AN ON-SITE LANDFILL. THIS RETROFIT SYSTEM HAS BEEN OPERATIONAL SINCE AUGUST 1976.
LOUISVILLE GAS & ELECTRIC CANE RUN 5 RETROFIT 200 MW (GROSS) 200 MW (ESC) COAL 3.75 %S BITUMINOUS LIME COMBUSTION ENGINEERING ENERGY CONSUMPTION: 1.5% STATUS 1 STARTUP 12/77	CANE RUN 5 OF LOUISVILLE GAS AND ELECTRIC IS A PULVERIZED BITUMINOUS COAL (3.75% S, 11,500 BTU/LB) FIRED UNIT LOCATED IN LOUISVILLE, KENTUCKY. THE BOILER SUPPLIES 700,000 ACFM OF FLUE GAS TO AN EMISSION CONTROL SYSTEM CONSISTING OF AN ESP FOLLOWED AND TWO COMBUSTION ENGINEERING 85% EFFICIENT (DESIGN) CARBIDE LIME SPRAY TOWERS. A STEAM TUBE REHEATER RAISES THE GAS TEMPERATURE 40 DEG F. THE SYSTEM OPERATES IN AN OPEN WATER LOOP MODE, AND THE SLUDGE IS POZ-O-TEC STABILIZED. OPERATION OF THIS RETROFIT SYSTEM BEGAN IN DECEMBER 1977.
LOUISVILLE GAS & ELECTRIC CANE RUN 6 RETROFIT 299 MW (GROSS) 299 MW (ESC) COAL 4.80 %S BITUMINOUS DUAL ALKALI THYSSEN/CEA ENERGY CONSUMPTION: 1.0% STATUS 1 STARTUP 4/79	LOUISVILLE GAS AND ELECTRIC'S CANE RUN 6 IS A 299-MW (GROSS) BITUMINOUS COAL (4.80% S, 11,500 BTU/LB) FIRED UNIT LOCATED IN LOUISVILLE, KENTUCKY. THYSSEN/CEA SUPPLIED A RETROFIT DUAL ALKALI DEMONSTRATION FGD SYSTEM FOR THIS UNIT. THE EMISSION CONTROL SYSTEM, DESIGNED TO REMOVE 95% OF THE FLUE GAS SO2, CONSISTS OF A COLD SIDE ESP AND TWO TRAY TOWER MODULES. THE CLEANED GAS PASSES THROUGH A CHEVRON MIST ELIMINATOR AND TWO DIRECT COMBUSTION REHEATERS BEFORE EXITING A 518 FOOT STACK. THE WATER LOOP IS OPEN, AND THE SLUDGE IS DISPOSED IN AN ON-SITE LANDFILL. FOR A ONE YEAR PERIOD FOLLOWING THE FIRST QUARTER OF OPERATION (WHICH BEGAN IN APRIL 1979), THE U.S.EPA SUBSIDIZED THE OPERATIONS (FOR $4.5 MAX) FOR R&D AND REPORT WRITING.

SECTION 2
STATUS OF FGD SYSTEMS

UNIT IDENTIFICATION	ABSTRACT
LOUISVILLE GAS & ELECTRIC MILL CREEK 1 RETROFIT 358 MW (GROSS) 358 MW (ESC) COAL 3.75 %S BITUMINOUS LIME COMBUSTION ENGINEERING ENERGY CONSUMPTION: 1.4% STATUS 1 STARTUP 12/80	MILL CREEK 1 OF LOUISVILLE GAS AND ELECTRIC IS LOCATED IN LOUISVILLE, KENTUCKY. A RETROFIT LIME/LIMESTONE FGD SYSTEM IS PRESENTLY OPERATING ON THIS PULVERIZED COAL (3.75% S, 11,500 BTU/LB) FIRED UNIT. COMBUSTION ENGINEERING SUPPLIED THE LIME/LIMESTONE FGD SYSTEM WHICH IS SCHEDULED TO COMPLY WITH LOCAL EMISSION STANDARDS BY APRIL 1981.
LOUISVILLE GAS & ELECTRIC MILL CREEK 2 RETROFIT 350 MW (GROSS) 350 MW (ESC) COAL 3.75 %S BITUMINOUS LIME COMBUSTION ENGINEERING ENERGY CONSUMPTION: 1.4% STATUS 1 STARTUP 12/81	MILL CREEK 2 OF LOUISVILLE GAS AND ELECTRIC IS LOCATED IN LOUISVILLE, KENTUCKY. A RETROFIT LIME/LIMESTONE FGD SYSTEM IS PRESENTLY OPERATING ON THIS PULVERIZED COAL (3.75% S, 11,500 BTU/LB) FIRED UNIT. COMBUSTION ENGINEERING SUPPLIED THE LIME/LIMESTONE FGD SYSTEM WHICH IS SCHEDULED TO COMPLY WITH LOCAL EMISSION STANDARDS BY APRIL 1982.
LOUISVILLE GAS & ELECTRIC MILL CREEK 3 NEW 427 MW (GPOSS) 427 MW (ESC) COAL 3.75 %S BITUMINOUS LIME AMERICAN AIR FILTER ENERGY CONSUMPTION: ****% STATUS 1 STARTUP 8/78	LOUISVILLE GAS AND ELECTRIC'S MILL CREEK 3 IS A 3.75% S COAL (11,500 BTU/LB) FIRED UNIT LOCATED IN LOUISVILLE, KENTUCKY. AMERICAN AIR FILTER SUPPLIED A CARBIDE LIME FGD SYSTEM FOR THIS UNIT WHICH WAS DESIGNED TO REMOVE 85% OF THE SO2 FROM THE FLUE GAS. AN ESP IS FOLLOWED BY FOUR MOBILE BED CONTACTORS AND A STEAM TUBE REHEATER. THE WATER LOOP IS OPEN, AND THE FLYASH AND LIME STABILIZED SLUDGE IS PONDED. THIS UNIT HAS BEEN OPERATIONAL SINCE AUGUST 1978.
LOUISVILLE GAS & ELECTRIC MILL CREEK 4 NEW 495 MW (GROSS) 495 MW (ESC) COAL 3.75 %S LIME AMERICAN AIR FILTER ENERGY CONSUMPTION: ****% STATUS 2 STARTUP 6/82	MILL CREEK 4 OF LOUISVILLE GAS AND ELECTRIC IS A PULVERIZED BITUMINOUS COAL (3.75% S, 11,500 BTU/LB) FIRED UNIT UNDER CONSTRUCTION IN LOUISVILLE, KENTUCKY. THE EMISSION CONTROL SYSTEM WILL CONSIST OF AN ESP AND FOUR MOBILE BED CONTACTORS. THE SYSTEM'S WATER LOOP WILL BE CLOSED, AND THE SLUDGE WILL BE STABILIZED WITH LIME AND FLYASH. STEAM TUBES WILL PROVIDE REHEAT OF THE CLEANED GASES. THE SYSTEM IS SCHEDULED TO START-UP IN JUNE 1982.
LOUISVILLE GAS & ELECTRIC PADDY'S RUN 6 RETROFIT 72 MW (GROSS) 72 MW (ESC) COAL 2.50 %S BITUMINOUS LIME COMBUSTION ENGINEERING ENERGY CONSUMPTION: 2.8% STATUS 1 STARTUP 4/73	UNIT 6 AT LOUISVILLE GAS AND ELECTRIC'S PADDY'S RUN STATION IS A DRY BOTTOM PULVERIZED COAL (2.5% S, 11,500 BTU/LB) FIRED UNIT IN LOUISVILLE, KENTUCKY. A RETROFIT CARBIDE LIME FGD SYSTEM BY COMBUSTION ENGINEERING TREATS 400,000 ACFM OF FLUE GAS FROM THE BOILER. AN ESP IS FOLLOWED BY TWO MARBLE BED ABSORBERS, A DIRECT COMBUSTION REHEATER, AND A 250 FOOT STACK. MIST ELIMINATION IS PROVIDED BY ONE CHEVRON/MODULE. THE LIME FIXATED SLUDGE IS TRUCKED TO AN UNLINED POND, AND THE WATER LOOP IS CLOSED. THE FGD SYSTEM BEGAN INITIAL OPERATIONS IN APRIL 1973.
LOUISVILLE GAS & ELECTRIC TRIMBLE COUNTY 1 NEW 575 MW (GROSS) 575 MW (ESC) COAL 4.00 %S BITUMINOUS PROCESS NOT SELECTED VENDOR NOT SELECTED ENERGY CONSUMPTION: ****% STATUS 5 STARTUP 7/85	LOUISVILLE GAS AND ELECTRIC WILL BE INSTALLING FGD SYSTEMS ON TWO OF THE FOUR BOILERS AT THE UTILITY'S PLANNED TRIMBLE COUNTY STATION IN BEDFORD, KENTUCKY. THE PULVERIZED 4% S (IF NO COAL WASH IS INCLUDED) COAL FIRED UNITS' FLUE GAS WILL BE CLEANED BY ESP'S AND WET SCRUBBING (90% REMOVAL EFFICIENCY). SLUDGE DISPOSAL STRATEGY IS UNDECIDED. UNIT 1 IS SCHEDULED FOR START-UP IN JULY 1985.

SECTION 2
STATUS OF FGD SYSTEMS

UNIT IDENTIFICATION	ABSTRACT
LOUISVILLE GAS & ELECTRIC TRIMBLE COUNTY 2 NEW 575 MW (GROSS) 575 MW (ESC) COAL 4.00 %S BITUMINOUS PROCESS NOT SELECTED VENDOR NOT SELECTED ENERGY CONSUMPTION: ****% STATUS 5 STARTUP 7/89	LOUISVILLE GAS AND ELECTRIC WILL BE INSTALLING FGD SYSTEMS ON TWO OF THE FOUR BOILERS AT THE UTILITY'S PLANNED TRIMBLE COUNTY STATION IN BEDFORD, KENTUCKY. THE PULVERIZED 4% S (IF NO COAL WASH IS INCLUDED) COAL FIRED UNITS' FLUE GAS WILL BE CLEANED BY ESP'S AND WET SCRUBBING (90% REMOVAL EFFICIENCY). SLUDGE DISPOSAL STRATEGY IS UNDECIDED. UNIT 2 IS SCHEDULED FOR START-UP IN 1989.
LOWER COLORADO RIVER AUTH FAYETTE POWER PROJECT 3 NEW 435 MW (GROSS) 435 MW (ESC) LIGNITE 1.70 %S LIMESTONE VENDOR NOT SELECTED ENERGY CONSUMPTION: 2.8% STATUS 6 STARTUP 0/88	LOWER COLORADO RIVER AUTHORITY HAS PLANS TO CONSTRUCT A 435 MW UNIT, FAYETTE POWER PROJECT 3, TO BE LOCATED IN LA GRANGE, TEXAS. THE LIGNITE (1.7% S, 4300 BTU/LB) FIRED BOILER WILL UTILIZE A WET LIMESTONE SCRUBBING SYSTEM DESIGNED TO REMOVE 90% SO2. OPERATIONS ARE SCHEDULED TO COMMENCE IN 1988.
MARQUETTE BOARD OF LIGHT & PWR SHIRAS 3 NEW 44 MW (GROSS) 44 MW (ESC) COAL **** %S LIME/SPRAY DRYING GE ENVIRONMENTAL SERVICES ENERGY CONSUMPTION: ****% STATUS 2 STARTUP 9/82	SHIRAS 3 OF THE MARQUETTE BOARD OF LIGHT AND POWER IS A PULVERIZED COAL FIRED BOILER UNDER CONSTRUCTION IN MARQUETTE, MICHIGAN. THE UTILITY HAS AWARDED A CONTRACT TO GE ENVIRONMENTAL SERVICES FOR A LIME/SPRAY DRYING PROCESS TO CONTROL EMISSIONS. THE SYSTEM WILL UTILIZE A FABRIC FILTER TO OBTAIN A PARTICLE REMOVAL EFFICIENCY OF 99.8%. THE UNIT IS SCHEDULED TO COMMENCE OPERATIONS IN SEPTEMBER 1982.
MICHIGAN SO CENTRAL PWR AGENCY PROJECT 1 NEW 55 MW (GROSS) 55 MW (ESC) COAL 2.25 %S BITUMINOUS LIMESTONE BABCOCK & WILCOX ENERGY CONSUMPTION: 1.8% STATUS 2 STARTUP 6/82	THE PROJECT 1 UNIT OF MICHIGAN SOUTH CENTRAL POWER AGENCY IS UNDER CONSTRUCTION IN LITCHFIELD, MICHIGAN, AND WILL UTILIZE A WET LIMESTONE FGD PROCESS. THE PULVERIZED COAL FIRED BOILER WILL FEED ITS FLUE GAS THROUGH A HOT SIDE ESP FOLLOWED BY A BABCOCK AND WILCOX LIMESTONE SPRAY TOWER. THE CLEANED GAS WILL PASS THROUGH A MIST ELIMINATOR BEFORE BEING HEATED BY AN IN-LINE REHEATER AND EXITING A 250 FOOT STACK. THE SLUDGE IS TO BE DISPOSED OFF SITE. START-UP IS SCHEDULED FOR JUNE 1982.
MIDDLE SOUTH UTILITIES ARKANSAS LIGNITE 5 NEW 890 MW (GROSS) 890 MW (ESC) COAL .50 %S LIGNITE LIMESTONE COMBUSTION ENGINEERING ENERGY CONSUMPTION: ****% STATUS 4 STARTUP 0/90	UNIT 1 OF THE ARKANSAS ENERGY LIGNITE CENTER IS A LIGNITE (.5% S) FIRED BOILER. MIDDLE SOUTH UTILITIES HAS SIGNED A LETTER OF INTENT WITH COMBUSTION ENGINEERING FOR A WET LIMESTONE SCRUBBING SYSTEM TO CONTROL EMISSIONS. OPERATIONS ARE SCHEDULED TO COMMENCE IN 1990.
MIDDLE SOUTH UTILITIES ARKANSAS LIGNITE 6 NEW 890 MW (GROSS) 890 MW (ESC) COAL .50 %S LIGNITE LIMESTONE COMBUSTION ENGINEERING ENERGY CONSUMPTION: ****% STATUS 4 STARTUP 0/92	UNIT 2 OF THE ARKANSAS ENERGY LIGNITE CENTER IS A LIGNITE (.5% S) FIRED BOILER. MIDDLE SOUTH UTILITIES HAS SIGNED A LETTER OF INTENT WITH COMBUSTION ENGINEERING FOR A WET LIMESTONE SCRUBBING SYSTEM TO CONTROL EMISSIONS. OPERATIONS ARE SCHEDULED TO COMMENCE IN 1992.

SECTION 2
STATUS OF FGD SYSTEMS

UNIT IDENTIFICATION	ABSTRACT
MIDDLE SOUTH UTILITIES UNASSIGNED 1 NEW 890 MW (GROSS) 890 MW (ESC) COAL .50 %S LIMESTONE COMBUSTION ENGINEERING ENERGY CONSUMPTION: ****% STATUS 4 STARTUP 0/89	MIDDLE SOUTH UTILITIES HAS SIGNED A LETTER OF INTENT WITH COMBUSTION ENGINEERING FOR A WET LIMESTONE SCRUBBING SYSTEM TO CONTROL EMISSIONS. THE PLANT NAME HAS NOT BEEN ASSIGNED. THE PLANT WILL BE LOCATED SOMEWHERE IN LOUISIANA. START-UP IS SCHEDULED FOR 1989.
MIDDLE SOUTH UTILITIES UNASSIGNED 2 NEW 890 MW (GROSS) 890 MW (ESC) COAL .50 %S LIMESTONE COMBUSTION ENGINEERING ENERGY CONSUMPTION: ****% STATUS 4 STARTUP 0/93.	MIDDLE SOUTH UTILITIES HAS SIGNED A LETTER OF INTENT WITH COMBUSTION ENGINEERING FOR A WET LIMESTONE SCRUBBING SYSTEM TO CONTROL EMISSIONS. THE PLANT NAME HAS NOT BEEN ASSIGNED. THE PLANT WILL BE LOCATED SOMEWHERE IN LOUISIANA. START-UP IS SCHEDULED FOR 1993.
MIDDLE SOUTH UTILITIES WILTON 1 NEW 890 MW (GROSS) 890 MW (ESC) COAL .50 %S LIMESTONE COMBUSTION ENGINEERING ENERGY CONSUMPTION: ****% STATUS 4 STARTUP 0/88	WILTON 1 IS A COAL (.50% S) FIRED BOILER TO BE LOCATED IN CONVENT, LOUISIANA. MIDDLE SOUTH UTILITIES HAS SIGNED A LETTER OF INTENT WITH COMBUSTION ENGINEERING FOR A WET LIMESTONE SCRUBBING SYSTEM FOR EMISSION CONTROL. START-UP IS SCHEDULED FOR 1988.
MIDDLE SOUTH UTILITIES WILTON 2 NEW 890 MW (GROSS) 890 MW (ESC) COAL .50 %S LIMESTONE COMBUSTION ENGINEERING ENERGY CONSUMPTION: ****% STATUS 4 STARTUP 0/91	WILTON 2 IS A COAL (.50% S) FIRED BOILER TO BE LOCATED IN CONVENT, LOUISIANA. MIDDLE SOUTH UTILITIES HAS SIGNED A LETTER OF INTENT WITH COMBUSTION ENGINEERING FOR A WET LIMESTONE SCRUBBING SYSTEM FOR EMISSION CONTROL. START-UP IS SCHEDULED FOR 1991.
MINNESOTA POWER & LIGHT CLAY BOSWELL 4 NEW 554 MW (GROSS) 475 MW (ESC) COAL .94 %S SUBBITUMINOUS LIME/ALKALINE FLYASH PEABODY PROCESS SYSTEMS ENERGY CONSUMPTION: 1.3% STATUS 1 STARTUP 4/80	CLAY BOSWELL 4 OF MINNESOTA POWER AND LIGHT IS A SUBBITUMINOUS COAL (0.94% S, 8896 BTU/LB) FIRED UNIT LOCATED IN COHASSET, MINNESOTA. PEABODY PROCESS SYSTEMS HAS SUPPLIED A LIME/ALKALINE FLYASH SYSTEM WHICH IS DESIGNED TO REMOVE 84.6% OF THE SO2 IN THE FLUE GAS. TWO HOT SIDE ESP'S ARE FOLLOWED BY VENTURI/SPRAY TOWER TRAINS. MIST ELIMINATION IS PROVIDED BY A SIEVE TRAY FOLLOWED BY A SPIN VANE CHEVRON, AND REHEAT IS SUPPLIED BY BYPASSING 5% OF THE FLUE GAS. THE SYSTEM OPERATES IN A CLOSED WATER LOOP MODE, AND THE SLUDGE IS DISPOSED IN A LINED POND. OPERATIONS COMMENCED IN APRIL 1980.
MINNKOTA POWER MILTON R. YOUNG 2 NEW 440 MW (GROSS) 185 MW (ESC) COAL .70 %S LIGNITE LIME/ALKALINE FLYASH THYSSEN/CEA ENERGY CONSUMPTION: 1.6% STATUS 1 STARTUP 9/77	MINNKOTA POWER COOPERATIVE'S MILTON R. YOUNG 2 IS A CYCLONE FIRED LIGNITE (0.70%S, 6500 BTU/LB) BOILER LOCATED IN CENTER, NORTH DAKOTA. THE BOILER PRODUCES 2,021,400 ACFM OF FLUE GAS, HALF OF WHICH IS CLEANED BY TWO ESP'S AND TWO THYSSEN/CEA LIME/ALKALINE FLYASH SPRAY TOWERS (75% DESIGN SO2 REMOVAL EFFICIENCY). THE CLEANED GAS PASSES THROUGH A CHEVRON MIST ELIMINATOR BEFORE IT JOINS A 15% BYPASS REHEAT (HOT UNSCRUBBED GAS), AND EXITS A 550 FOOT STACK. THE WATER LOOP IS OPEN, AND THE SLUDGE IS TRUCKED TO AN OFF-SITE MINEFILL. OPERATIONS BEGAN IN 1977.

SECTION 2
STATUS OF FGD SYSTEMS

UNIT IDENTIFICATION	ABSTRACT
MONONGAHELA POWER PLEASANTS 1 NEW 668 MW (GROSS) 668 MW (ESC) COAL 3.00 %S BITUMINOUS LIME BABCOCK & WILCOX ENERGY CONSUMPTION: ****% STATUS 1 STARTUP 3/79	MONONGAHELA POWER PLEASANTS 1 IS A BITUMINOUS COAL (3.70% S, 12,150 BTU/LB) FIRED BOILER IN BELMONT, WEST VIRGINIA. BABCOCK AND WILCOX SUPPLIED A LIME FGD SYSTEM DESIGNED TO REMOVE 90% OF THE FLUE GAS SO2 FROM THIS UNIT. THE EMISSION CONTROL SYSTEM INCLUDES AN ESP UPSTREAM OF FOUR SPRAY TOWER ABSORBERS. A FLUE GAS BYPASS SYSTEM PROVIDES REHEAT OF THE CLEANED GAS BEFORE IT IS DISCHARGED THROUGH A 1200 FOOT PLACITE LINED STACK. THE SYSTEM OPERATES IN AN OPEN WATER LOOP. THE FGD SYSTEM ON THIS UNIT HAS BEEN OPERATIONAL SINCE MARCH 1979.
MONONGAHELA POWER PLEASANTS 2 NEW 668 MW (GROSS) 668 MW (ESC) COAL 3.00 %S BITUMINOUS LIME BABCOCK & WILCOX ENERGY CONSUMPTION: ****% STATUS 1 STARTUP 10/80	MONONGAHELA POWER PLEASANTS 2 IS A BITUMINOUS COAL (4.5% S, 12150 BTU/LB) FIRED BOILER LOCATED IN BELMONT, WEST VIRGINIA. BABCOCK AND WILCOX SUPPLIED A LIME FGD SYSTEM DESIGNED TO REMOVE 90% OF THE BOILER FLUE GAS SO2. THE EMISSION CONTROL SYSTEM ON THIS UNIT INCLUDES AN ESP UPSTREAM OF FOUR SPRAY TOWER ABSORBERS. A FLUE GAS BYPASS SYSTEM PROVIDES REHEAT OF THE CLEANED GAS BEFORE IT IS DISCHARGED THROUGH A 1200 FOOT ACID BRICK STACK. THE SYSTEM OPERATES IN AN OPEN WATER LOOP. THE FGD SYSTEM OPERATION COMMENCED IN OCTOBER 1980.
MONTANA POWER COLSTRIP 1 NEW 360 MW (GROSS) 360 MW (ESC) COAL .77 %S SUBBITUMINOUS LIME/ALKALINE FLYASH THYSSEN/CEA ENERGY CONSUMPTION: 3.3% STATUS 1 STARTUP 9/75	COLSTRIP 1 OF MONTANA POWER IS A 360-MW (GROSS) SUBBITUMINOUS COAL (0.77% S, 8843 BTU/LB) FIRED UNIT LOCATED IN COLSTRIP, MONTANA. THYSSEN-CEA SUPPLIED A LIME/ALKALINE FLYASH FGD SYSTEM CONSISTING OF THREE VENTURI SCRUBBER/SPRAY TOWER ABSORBER TRAINS. THE ABSORBERS ARE FOLLOWED BY HORIZONTAL CHEVRON MIST ELIMINATORS, A STEAM TUBE REHEATER, AND A 500 FOOT STACK. THE UNSTABILIZED SLUDGE IS DISPOSED IN AN ON-SITE LINED POND. THE WATER LOOP IS CLOSED. OPERATIONS INITIALLY BEGAN IN SEPTEMBER 1975.
MONTANA POWER COLSTRIP 2 NEW 360 MW (GROSS) 360 MW (ESC) COAL .77 %S SUBBITUMINOUS LIME/ALKALINE FLYASH THYSSEN/CEA ENERGY CONSUMPTION: 3.3% STATUS 1 STARTUP 5/76	COLSTRIP 2 OF MONTANA POWER IS A 360-MW (GROSS) SUBBITUMINOUS COAL (0.77% S, 8843 BTU/LB) FIRED UNIT LOCATED IN COLSTRIP, MONTANA. THYSSEN CEA SUPPLIED A LIME/ALKALINE FLYASH FGD SYSTEM CONSISTING OF THREE VENTURI SCRUBBER/SPRAY TOWER ABSORBER TRAINS. THE ABSORBERS ARE FOLLOWED BY HORIZONTAL CHEVRON MIST ELIMINATORS, A STEAM TUBE REHEATER, AND A 500 FOOT STACK. THE UNSTABILIZED SLUDGE IS DISPOSED IN AN ON-SITE LINED POND. THE WATER LOOP IS CLOSED. OPERATIONS INITIALLY BEGAN IN MAY 1976.
MONTANA POWER COLSTRIP 3 NEW 700 MW (GROSS) 700 MW (ESC) COAL .70 %S LIME/ALKALINE FLYASH THYSSEN/CEA ENERGY CONSUMPTION: ****% STATUS 2 STARTUP 10/83	MONTANA POWER'S COLSTRIP 3 IS A LOW SULFUR COAL (0.7% S, 8800 BTU/LB) FIRED UNIT UNDER CONSTRUCTION IN COLSTRIP, MONTANA. A CONTRACT HAS BEEN AWARDED TO THYSSEN/CEA FOR A LIME/ALKALINE FLYASH FGD SYSTEM ON THIS UNIT. START UP IS SCHEDULED FOR OCTOBER 1983.
MONTANA POWER COLSTRIP 4 NEW 700 MW (GROSS) 700 MW (ESC) COAL .70 %S LIME/ALKALINE FLYASH THYSSEN/CEA ENERGY CONSUMPTION: ****% STATUS 2 STARTUP 0/84	MONTANA POWER'S COLSTRIP 4 IS A LOW SULFUR COAL (0.7% S, 8800 BTU/LB) FIRED UNIT UNDER CONSTRUCTION IN COLSTRIP, MONTANA. A CONTRACT HAS BEEN AWARDED TO THYSSEN/CEA FOR A LIME/ALKALINE FLYASH FGD SYSTEM ON THIS UNIT. START UP IS SCHEDULED FOR 1984.

SECTION 2
STATUS OF FGD SYSTEMS

UNIT IDENTIFICATION	ABSTRACT
MONTANA-DAKOTA UTILITIES COYOTE 1 NEW 440 MW (GROSS) 440 MW (ESC) COAL .87 %S LIGNITE SODIUM CARBONATE/SPRAY DRYING WHEELABRATOR-FRYE/R.I. ENERGY CONSUMPTION: 1.1% STATUS 1 STARTUP 4/81	COYOTE 1 IS A CYCLONE FIRED PULVERIZED LIGNITE (0.87% S, 7050 BTU/LB) BOILER OPERATING IN BEULAH, NORTH DAKOTA. THIS UNIT IS JOINTLY OWNED BY FIVE UTILITIES, WITH MONTANA-DAKOTA UTILITIES BEING THE MAJOR OWNER AND CONSTRUCTOR. AN AQUEOUS CARBONATE DRY FGD SYSTEM DESIGNED TO REMOVE 70% OF THE SO2 WAS SUPPLIED BY WHEELABRATOR-FRYE AND ROCKWELL INTERNATIONAL. THE SPRAY DRYER/BAGHOUSE SYSTEM COMMENCED OPERATION IN APRIL 1981.
MUSCATINE POWER & WATER MUSCATINE 9 NEW 166 MW (GROSS) 166 MW (ESC) COAL 3.21 %S BITUMINOUS LIMESTONE RESEARCH-COTTRELL ENERGY CONSUMPTION: 4.8% STATUS 2 STARTUP 9/82	MUSCATINE 9 IS A PULVERIZED BITUMINOUS COAL (3.21% S, 11,200 BTU/LB) FIRED UNIT UNDER CONSTRUCTION IN MUSCATINE, IOWA. RESEARCH-COTTRELL IS SUPPLYING A LIMESTONE SCRUBBING SYSTEM FOR EMISSION CONTROL. THE FGD SYSTEM WILL FEATURE AN ESP, TWO 100% CAPACITY ABSORBER TOWERS, STEAM COIL REHEAT A CLOSED WATER LOOP, AND FORCED OXIDATION OF THE SLUDGE BEFORE LANDFILL. THE DESIGN SO2 REMOVAL WILL BE 94%. START-UP IS SCHEDULED TO TAKE PLACE IN 1982.
NEBRASKA PUBLIC POWER DISTRICT FOSSIL III 1 NEW 650 MW (GROSS) 650 MW (ESC) COAL .36 %S SUBBITUMINOUS PROCESS NOT SELECTED VENDOR NOT SELECTED ENERGY CONSUMPTION: ****% STATUS 6 STARTUP 3/92	FOSSIL III 1 IS A PULVERIZED SUBBITUMINOUS COAL (0.36% S, 8000 BTU/LB) FIRED UNIT PLANNED BY THE NEBRASKA PUBLIC POWER DISTRICT TO BE LOCATED NEAR SARGENT, NEBRASKA. THE UTILITY IS CONSIDERING A DRY SCRUBBING FGD PROCESS TO CONTROL EMISSIONS FROM THE 650 MW BOILER. START-UP FOR THE UNIT IS TENTATIVELY SCHEDULED FOR MARCH 1992.
NEVADA POWER HARRY ALLEN 1 NEW 500 MW (GROSS) 500 MW (ESC) COAL ***** %S PROCESS NOT SELECTED VENDOR NOT SELECTED ENERGY CONSUMPTION: ****% STATUS 6 STARTUP 6/86	NEVADA POWER'S HARRY ALLEN 1 IS A PLANNED COAL FIRED UNIT TO BE LOCATED IN LAS VEGAS, NEVADA. THE UTILITY IS CONSIDERING A HOT SIDE ESP IN CONJUNCTION WITH AN FGD SYSTEM. SPECIFICATIONS HAVE NOT YET BEEN PREPARED. START-UP IS SCHEDULED FOR JUNE 1986.
NEVADA POWER HARRY ALLEN 2 NEW 500 MW (GROSS) 500 MW (ESC) COAL ***** %S PROCESS NOT SELECTED VENDOR NOT SELECTED ENERGY CONSUMPTION: ****% STATUS 6 STARTUP 6/87	NEVADA POWER'S HARRY ALLEN 2 IS A PLANNED COAL FIRED UNIT TO BE LOCATED IN LAS VEGAS, NEVADA. THE UTILITY IS CONSIDERING A HOT SIDE ESP IN CONJUNCTION WITH AN FGD SYSTEM. SPECIFICATIONS HAVE NOT YET BEEN PREPARED. START-UP IS SCHEDULED FOR JUNE 1987.
NEVADA POWER HARRY ALLEN 3 NEW 500 MW (GROSS) 500 MW (ESC) COAL ***** %S PROCESS NOT SELECTED VENDOR NOT SELECTED ENERGY CONSUMPTION: ****% STATUS 6 STARTUP 6/88	NEVADA POWER'S HARRY ALLEN 3 IS A PLANNED COAL FIRED UNIT TO BE LOCATED IN LAS VEGAS, NEVADA. THE UTILITY IS CONSIDERING A HOT SIDE ESP IN CONJUNCTION WITH AN FGD SYSTEM. SPECIFICATIONS HAVE NOT YET BEEN PREPARED. START-UP IS SCHEDULED FOR JUNE 1988.

SECTION 2
STATUS OF FGD SYSTEMS

UNIT IDENTIFICATION	ABSTRACT
NEVADA POWER HARRY ALLEN 4 NEW 500 MW (GROSS) 500 MW (ESC) COAL ***** %S PROCESS NOT SELECTED VENDOR NOT SELECTED ENERGY CONSUMPTION: ****% STATUS 6 STARTUP 6/89	NEVADA POWER'S HARRY ALLEN 4 IS A PLANNED COAL FIRED UNIT TO BE LOCATED IN LAS VEGAS, NEVADA. THE UTILITY IS CONSIDERING A HOT SIDE ESP IN CONJUNCTION WITH AN FGD SYSTEM. SPECIFICATIONS HAVE NOT YET BEEN PREPARED. START-UP IS SCHEDULED FOR JUNE 1989.
NEVADA POWER REID GARDNER 1 RETROFIT 125 MW (GROSS) 125 MW (ESC) COAL .50 %S BITUMINOUS SODIUM CARBONATE THYSSEN/CEA ENERGY CONSUMPTION: ****% STATUS 1 STARTUP 3/74	REID GARDNER 1 IS A 125-MW (GROSS) WET BOTTOM LOW SULFUR COAL (0.5% S, 12,450 BTU/LB) FIRED UNIT OWNED BY NEVADA POWER, LOCATED IN MOAPA, NEVADA. THE THYSSEN/CEA SODIUM CARBONATE-BASED (TRONA) SCRUBBING SYSTEM CONSISTS OF ONE MODULE CONTAINING TWIN VARIABLE THROAT VENTURIS FOLLOWED BY A SEPARATOR IN SERIES WITH A SINGLE STAGE PEFORATED PLATE WASH TOWER. PRIMARY PARTICULATE CONTROL IS PROVIDED BY UPSTREAM MULTICLONES. A RADIAL VANE MIST ELIMINATOR PRECEDES AN INDIRECT STEAM COIL REHEATER AND A 200 FOOT STACK. THE SYSTEM OPERATES IN AN OPEN WATER LOOP, AND THE SLUDGE IS DISPOSED IN AN ON-SITE CLAY LINED SOLAR EVAPORATION POND. THE DESIGN SO2 REMOVAL EFFICIENCY IS 90%. THE SYSTEM HAS BEEN OPERATIONAL SINCE MARCH 1974.
NEVADA POWER REID GARDNER 2 RETROFIT 125 MW (GROSS) 125 MW (ESC) COAL .50 %S BITUMINOUS SODIUM CARBONATE THYSSEN/CEA ENERGY CONSUMPTION: ****% STATUS 1 STARTUP 4/74	REID GARDNER 2 IS A 125-MW (GROSS) WET BOTTOM LOW SULFUR COAL (0.5% S, 12,450 BTU/LB) FIRED UNIT OWNED BY NEVADA POWER, LOCATED IN MOAPA, NEVADA. THE THYSSEN/CEA SODIUM CARBONATE-BASED (TRONA) SCRUBBING SYSTEM CONSISTS OF ONE MODULE CONTAINING TWIN VARIABLE THROAT VENTURIS FOLLOWED BY A SEPARATOR IN SERIES WITH A SINGLE STAGE PEFORATED PLATE WASH TOWER. PRIMARY PARTICULATE CONTROL IS PROVIDED BY UPSTREAM MULTICLONES. A RADIAL VANE MIST ELIMINATOR PRECEDES AN INDIRECT STEAM COIL REHEATER AND A 200 FOOT STACK. THE SYSTEM OPERATES IN AN OPEN WATER LOOP, AND THE SLUDGE IS DISPOSED IN AN ON-SITE CLAY LINED SOLAR EVAPORATION POND. THE DESIGN SO2 REMOVAL EFFICIENCY IS 90%. THE SYSTEM HAS BEEN OPERATIONAL SINCE APRIL 1974.
NEVADA POWER REID GARDNER 3 NEW 125 MW (GROSS) 125 MW (ESC) COAL .50 %S BITUMINOUS SODIUM CARBONATE THYSSEN/CEA ENERGY CONSUMPTION: ****% STATUS 1 STARTUP 6/76	REID GARDNER 3 IS A 125-MW (GROSS) WET BOTTOM LOW SULFUR COAL (0.5% S, 12,450 BTU/LB) FIRED UNIT OWNED BY NEVADA POWER, LOCATED IN MOAPA, NEVADA. THE THYSSEN/CEA SODIUM CARBONATE-BASED (TRONA) SCRUBBING SYSTEM CONSISTS OF ONE MODULE CONTAINING TWIN VARIABLE THROAT VENTURIS FOLLOWED BY A SEPARATOR IN SERIES WITH A SINGLE STAGE PEFORATED PLATE WASH TOWER. PRIMARY PARTICULATE CONTROL IS PROVIDED BY UPSTREAM MULTICLONES. A RADIAL VANE MIST ELIMINATOR PRECEDES AN INDIRECT STEAM COIL REHEATER AND A 200 FOOT STACK. THE SYSTEM OPERATES IN AN OPEN WATER LOOP, AND THE SLUDGE IS DISPOSED IN AN ON-SITE CLAY LINED SOLAR EVAPORATION POND. THE DESIGN SO2 REMOVAL EFFICIENCY IS 90%. THE SYSTEM HAS BEEN OPERATIONAL SINCE JUNE 1976.
NEVADA POWER REID GARDNER 4 NEW 250 MW (GROSS) 250 MW (ESC) COAL .75 %S SODIUM CARBONATE THYSSEN/CEA ENERGY CONSUMPTION: ****% STATUS 4 STARTUP 4/83	REID GARDNER 4 OF NEVADA POWER IS A COAL (0.75% S, 12,450 BTU/LB) FIRED UNIT PLANNED FOR LOCATION IN MOAPA, NEVADA. A LETTER OF INTENT HAS BEEN SIGNED WITH THYSSEN/CEA TO PROVIDE A SODIUM CARBONATE FGD SYSTEM. A BAGHOUSE WILL PRECEED THE FGD SYSTEM FOR PARTICULATE MATTER CONTROL SCHEDULED START-UP OF THIS 250-MW (GROSS) UNIT IS EXPECTED IN APRIL 1983.
NEW YORK STATE ELEC & GAS SOMERSET 1 NEW 625 MW (GROSS) 625 MW (ESC) COAL 2.20 %S BITUMINOUS LIMESTONE PEABODY PROCESS SYSTEMS ENERGY CONSUMPTION: ****% STATUS 4 STARTUP 6/84	THE NEW YORK STATE ELECTRIC & GAS CORP. HAS PLANS TO BUILD A PULVERIZED COAL FIRED BOILER IN SOMERSET, NEW YORK. THE BOILER IS TO GENERATE A FLUE GAS FLOW OF 2,227,000 ACFM AND BURN A BITUMINOUS COAL WITH AN AVERAGE SULFUR CONTENT OF 2.2% AND AN AVERAGE HEAT CONTENT OF 12,000 BTU/LB. A COLD SIDE ESP WITH A DESIGN EFFICIENCY OF 99.77% WILL PROVIDE THE PRIMARY PARTICULATE REMOVAL. A LIMESTONE ABSORBER WITH A DESIGN REMOVAL EFFICIENCY OF 90% WILL BE USED FOR SO2 REMOVAL. THE SYSTEM WILL OPERATE IN A CLOSED LOOP MODE. THE SLUDGE IS TO BE DEWATERED AND STABILIZED BEFORE BEING LANDFILLED. OPERATIONS ARE SCHEDULED FOR 1984.

SECTION 2
STATUS OF FGD SYSTEMS

UNIT IDENTIFICATION	ABSTRACT
NIAGARA MOHAWK POWER CHARLES R. HUNTLEY 66 RETROFIT 100 MW (GROSS) 100 MW (ESC) COAL 1.80 %S AQUEOUS CARBONATE/SPRAY DRYING ROCKWELL INTERNATIONAL ENERGY CONSUMPTION: ****% STATUS 2 STARTUP 4/82	CHARLES R. HUNTLEY 66 OF NIAGARA POWER COOP IS A PULVERIZED COAL (1.8% S, 12,500 BTU/LB) FIRED UNIT LOCATED IN BUFFALO, NEW YORK. A CONTRACT WAS AWARDED TO ROCKWELL INTERNATIONAL FOR THE DESIGN AND INSTALLATION OF A 90% EFFICIENT RETROFIT AQUEOUS CARBONATE FGD SYSTEM WHICH WILL PRODUCE ELEMENTAL SULFUR AS AN END PRODUCT. FUNDS ARE BEING PROVIDED BY THE U.S.EPA AND THE EMPIRE STATE ELECTRIC ENERGY RESEARCH CORP. A SPRAY DRYER WILL BE FOLLOWED BY TWO BANKS OF 8 CYCLONES, AN ESP, AND A LINED 200 FOOT CARBON STEEL STACK. THE WATER LOOP WILL BE OPEN. START-UP OF THE FGD SYSTEM WILL BE IN 1982.
NORTHERN INDIANA PUB SERVICE DEAN H. MITCHELL 11 RETROFIT 116 MW (GROSS) 115 MW (ESC) COAL 3.50 %S WELLMAN LORD DAVY MCKEE ENERGY CONSUMPTION: 12.1% STATUS 1 STARTUP 7/76	NORTHERN INDIANA PUBLIC SERVICE'S DEAN H. MITCHELL 11 IS A COAL (3.5% S, 11,000 BTU/LB) FIRED UNIT LOCATED IN GARY, INDIANA. A RETROFIT WELLMAN LORD FGD SYSTEM BY DAVY POWERGAS HAS BEEN OPERATING ON THIS UNIT SINCE JULY 1976. AN ESP IS FOLLOWED BY A VARIABLE THROAT VENTURI SCRUBBER AND A TRAY TOWER ABSORBER (90% DESIGN SO2 REMOVAL EFFICIENCY). A DIRECT COMBUSTION RAISES THE CLEANED GAS TEMPERATURE 50 DEG F BEFORE THE GAS IS DISCHARGED THROUGH A 168 FOOT STAINLESS STEEL AND FRP LINED STACK. ELEMENTAL SULFUR AND SODIUM SULFATE IS PRODUCED BY THE PROCESS DEVELOPED BY ALLIED CHEMICAL. THE SYSTEM OPERATES IN A CLOSED WATER LOOP MODE.
NORTHERN INDIANA PUB SERVICE SCHAHFER 17 NEW 421 MW (GROSS) 421 MW (ESC) COAL 3.20 %S BITUMINOUS DUAL ALKALI FMC ENERGY CONSUMPTION: ****% STATUS 2 STARTUP 6/83	SCHAHFER 17 OF NORTHERN INDIANA PUBLIC SERVICE IS A 3.2% SULFUR COAL FIRED UNIT UNDER CONSTRUCTION IN WHEATFIELD, INDIANA. FMC IS INSTALLING A DUAL ALKALI FGD SYSTEM FOR SO2 EMISSION CONTROL. PARTICULATE MATTER WILL BE COLLECTED BY AN ESP AND THE SYSTEM WILL INCLUDE A REHEATER. START-UP OF THIS UNIT IS SCHEDULED FOR JUNE 1983.
NORTHERN INDIANA PUB SERVICE SCHAHFER 18 NEW 421 MW (GROSS) 421 MW (ESC) COAL 3.20 %S BITUMINOUS DUAL ALKALI FMC ENERGY CONSUMPTION: ****% STATUS 3 STARTUP 6/85	SCHAHFER 18 OF NORTHERN INDIANA PUBLIC SERVICE IS A 3.2% SULFUR COAL FIRED UNIT PLANNED FOR CONSTRUCTION IN WHEATFIELD, INDIANA. THE UTILITY HAS AWARDED A CONTRACT TO FMC FOR THE INSTALLATION OF A DUAL ALKALI FGD SYSTEM AT THIS UNIT. PARTICULATE MATTER WILL BE COLLECTED BY AN ESP AND THE SYSTEM WILL INCLUDE A REHEATER. START-UP OF THIS UNIT IS SCHEDULED FOR JUNE 1985.
NORTHERN STATES POWER METRO COAL 1 NEW 200 MW (GROSS) 200 MW (ESC) COAL 1.00 %S SUBBITUMINOUS LIME VENDOR NOT SELECTED ENERGY CONSUMPTION: ****% STATUS 6 STARTUP 0/90	NORTHERN STATES POWER HAS PLANS TO CONSTRUCT A 190 MW (NET) PULVERIZED COA (1.0% S, 8700 BTU/LB) FIRED UNIT, METRO COAL 1. THE UNIT IS TO UTILIZE A LIME SPRAY DRYING SYSTEM ALONG WITH FABRIC FILTERS TO CONTROL EMISSIONS. OPERATIONS ARE SCHEDULED TO COMMENCE IN 1990.
NORTHERN STATES POWER RIVERSIDE 6-7 RETROFIT 110 MW (GROSS) 110 MW (ESC) COAL 1.20 %S SUBBITUMINOUS LIME/SPRAY DRYING JOY MFG/NIRO ATOMIZER ENERGY CONSUMPTION: ****% STATUS 1 STARTUP 11/80	RIVERSIDE 6 AND 7 ARE TWO COAL FIRED BOILERS OWNED BY NORTHERN STATES POWER AND LOCATED IN MINNEAPOLIS, MINNESOTA. EACH BOILER GENERATES A FLUE GAS FLOW OF 340,000 ACFM AT 350 F. CURRENTLY, A DEMONSTRATION LIME/SPRAY DRYING FGD SYSTEM THAT IS CAPABLE OF TREATING THE FLUE GAS FROM BOTH BOILERS IS BEING TESTED AT THIS UNIT. THE SYSTEM WAS SUPPLIED BY NIRO ATOMIZER/JOY MANUFACTURING AND CONSIST OF A SPRAY DRYER FOLLOWED BY A BAGHOUSE. THE CLEAN FLUE GAS IS VENTED TO TWO 275 FT CONCRETE STACKS WITH FIRE BRICK LINERS. SPENT ABSORBENT IS BEING DISPOSED OF IN AN OFF-SITE LANDFILL. OPERATIONS COMMENCED IN NOVEMBER 1980.

SECTION 2
STATUS OF FGD SYSTEMS

UNIT IDENTIFICATION	ABSTRACT
NORTHERN STATES POWER SHERBURNE 1 NEW 740 MW (GROSS) 740 MW (ESC) COAL .80 %S SUBBITUMINOUS LIMESTONE/ALKALINE FLYASH COMBUSTION ENGINEERING ENERGY CONSUMPTION: 2.7% STATUS 1 STARTUP 3/76	NORTHERN STATES POWER'S SHERBURNE 1 IS A BALANCED DRAFT PULVERIZED SUBBITUMINOUS COAL (0.80% S, 8500 BTU/LB) FIRED BOILER IN BECKER, MINNESOTA. A 50% EFFICIENT (DESIGN) LIMESTONE/ALKALINE FLYASH FGD SYSTEM SUPPLIED BY COMBUSTION ENGINEERING HAS BEEN OPERATIONAL ON THIS UNIT SINCE MARCH 1976. TWELVE VARIABLE THROAT ROD DECK VENTURI/MARBLE BED ABSORBER TRAINS ARE FOLLOWED BY ONE CHEVRON MIST ELIMINATOR/TRAIN, AN IN-LINE HOT WATER REHEATER, AND A 650 FOOT COR-TEN LINED STACK. THE SLUDGE IS FORCIBLY OXIDIZED AND DISPOSED IN A CLAY LINED SETTLING POND. THE WATER LOOP IS OPEN.
NORTHERN STATES POWER SHERBURNE 2 NEW 740 MW (GROSS) 740 MW (ESC) COAL .80 %S SUBBITUMINOUS LIMESTONE/ALKALINE FLYASH COMBUSTION ENGINEERING ENERGY CONSUMPTION: 2.7% STATUS 1 STARTUP 3/77	NORTHERN STATES POWER'S SHERBURNE 2 IS A BALANCED DRAFT PULVERIZED SUBBITUMINOUS COAL (0.80% S, 8500 BTU/LB) FIRED BOILER IN BECKER, MINNESOTA. A 50% EFFICIENT (DESIGN) LIMESTONE/ALKALINE FLYASH FGD SYSTEM SUPPLIED BY COMBUSTION ENGINEERING HAS BEEN OPERATIONAL ON THIS UNIT SINCE MARCH 1977. TWELVE VARIABLE THROAT ROD DECK VENTURI/MARBLE BED ABSORBER TRAINS ARE FOLLOWED BY ONE CHEVRON MIST ELIMINATOR/TRAIN, AN IN-LINE HOT WATER REHEATER, AND A 650 FOOT COR-TEN LINED STACK. THE SLUDGE IS FORCIBLY OXIDIZED AND DISPOSED IN A CLAY LINED SETTLING POND. THE WATER LOOP IS OPEN.
NORTHERN STATES POWER SHERBURNE 3 NEW 860 MW (GROSS) 810 MW (ESC) COAL 1.00 %S SUBBITUMINOUS LIME VENDOR NOT SELECTED ENERGY CONSUMPTION: ****% STATUS 6 STARTUP 0/85	NORTHERN STATES POWER HAS PLANS TO CONSTRUCT A 800 MW (NET) PULVERIZED COAL (1.0%S, 8700 BTU/LB) FIRED BOILER, SHERBURNE 3, TO BE LOCATED NEXT TO THE SHERBURNE 1 AND 2 UNITS IN BECKER, MINNESOTA. THE UTILITY IS CONSIDERING THE USE OF A LIME SPRAY DRYING PROCESS ALONG WITH FABRIC FILTERS TO CONTROL EMISSIONS. THE SYSTEM IS SCHEDULED TO COMMENCE OPERATIONS IN 1985.
PACIFIC GAS & ELECTRIC MONTEZUMA 1 NEW 800 MW (GROSS) 800 MW (ESC) COAL .80 %S SUBBITUMINOUS LIMESTONE VENDOR NOT SELECTED ENERGY CONSUMPTION: 3.5% STATUS 6 STARTUP 6/93	MONTEZUMA 1 OF PACIFIC GAS AND ELECTRIC IS A COAL (0.8% S, 12,000 BTU/LB) FIRED BOILER PLANNED FOR COLLINSVILLE, CALIFORNIA. THE EMISSION CONTROL SYSTEM WILL CONSIST OF A BAGHOUSE AND A LIMESTONE FGD SYSTEM. SLUDGE WILL BE DISPOSED OF IN A LANDFILL. START-UP IS SCHEDULED FOR 1993.
PACIFIC GAS & ELECTRIC MONTEZUMA 2 NEW 800 MW (GROSS) 800 MW (ESC) COAL .80 %S SUBBITUMINOUS LIMESTONE VENDOR NOT SELECTED ENERGY CONSUMPTION: 3.5% STATUS 6 STARTUP 6/94	MONTEZUMA 2 OF PACIFIC GAS AND ELECTRIC IS A COAL (0.8% S, 12,000 BTU/LB) FIRED BOILER PLANNED FOR COLLINSVILLE, CALIFORNIA. THE EMISSION CONTROL SYSTEM WILL CONSIST OF A BAGHOUSE AND A LIMESTONE FGD SYSTEM. SLUDGE WILL BE DISPOSED OF IN A LANDFILL. START-UP IS SCHEDULED FOR 1994.
PACIFIC POWER & LIGHT JIM BRIDGER 1 RETROFIT 550 MW (GROSS) 550 MW (ESC) COAL .56 %S SUBBITUMINOUS SODIUM CARBONATE VENDOR NOT SELECTED ENERGY CONSUMPTION: ****% STATUS 6 STARTUP 0/88	PACIFIC POWER AND LIGHT'S JIM BRIDGER 1 IS A DRY BOTTOM PULVERIZED SUBBITUMINOUS COAL (0.56%S, 9300 BTU/LB.) FIRED BOILER LOCATED IN ROCK SPRINGS, WYOMING. THE UTILITY IS CURRENTLY INVESTIGATING A RETROFIT FGD SYSTEM FOR SO2 CONTROL. A WET, SODIUM CARBONATE SYSTEM, WHICH TREATS 2,700,000 ACFM OF FLUE GAS, IS BEING PLANNED. A COLD-SIDE ESP IS CURRENTLY IN OPERATION FOR PRIMARY PARTICULATE CONTROL. START-UP IS SCHEDULED FOR 1988.

SECTION 2
STATUS OF FGD SYSTEMS

UNIT IDENTIFICATION	ABSTRACT
PACIFIC POWER & LIGHT JIM BRIDGER 2 RETROFIT 550 MW (GROSS) 550 MW (ESC) COAL .56 %S SUBBITUMINOUS SODIUM CARBONATE VENDOR NOT SELECTED ENERGY CONSUMPTION: ****% STATUS 6 STARTUP 0/90	PACIFIC POWER AND LIGHT'S JIM BRIDGER 2 IS A DRY BOTTOM PULVERIZED SUB-BITUMINOUS COAL (0.56%S, 9300 BTU/LB.) FIRED BOILER LOCATED IN ROCK SPRINGS, WYOMING. THE UTILITY IS CURRENTLY INVESTIGATING A RETROFIT FGD SYSTEM FOR SO2 CONTROL. A WET, SODIUM CARBONATE SYSTEM, WHICH TREATS 2,700,000 ACFM OF FLUE GAS, IS BEING PLANNED. A COLD-SIDE ESP IS CURRENTLY IN OPERATION FOR PRIMARY PARTICULATE CONTROL. START-UP IS SCHEDULED FOR 1990.
PACIFIC POWER & LIGHT JIM BRIDGER 2A RETROFIT 550 MW (GROSS) 100 MW (ESC) COAL .56 %S SUBBITUMINOUS LIME/SODIUM CARBONATE FLAKT ENERGY CONSUMPTION: ****% STATUS 2 STARTUP 1/82	PACIFIC POWER AND LIGHT'S JIM BRIDGER 2 IS A DRY BOTTOM PULVERIZED SUB-BITUMINOUS COAL (0.56%S, 9300 BTU/LB) FIRED BOILER LOCATED IN ROCK SPRINGS, WYOMING. THE UTILITY IS CURRENTLY CONSTRUCTING A DEMONSTRATION LIME (ALSO SODIUM CARBONATE)/SPRAY DRYING FGD SYSTEM CAPABLE OF TREATING ONE SIXTH OF THE TOTAL FLUE GAS FLOW FROM THE BOILER. A SLIP STREAM OF APPROXIMATELY 400000 ACFM AT 250 F FROM DOWNSTREAM OF THE AIR PREHEATER WILL BE TREATED. OUTLET GAS FROM THE SPRAY DRYER WILL THEN BE DUCTED BACK PRIOR TO THE PRESENT COLD SIDE ESP. THE SYSTEM IS SUPPLIED BY FLAKT AND A/E IS A JOINT VENTURE BETWEEN FLAKT AND PACIFIC POWER & LIGHT. STARTUP IS SCHEDULED FOR JANUARY 1982.
PACIFIC POWER & LIGHT JIM BRIDGER 3 RETROFIT 550 MW (GROSS) 550 MW (ESC) COAL .56 %S SUBBITUMINOUS SODIUM CARBONATE VENDOR NOT SELECTED ENERGY CONSUMPTION: ****% STATUS 6 STARTUP 0/86	PACIFIC POWER AND LIGHT'S JIM BRIDGER 3 IS A DRY BOTTOM PULVERIZED SUB-BITUMINOUS COAL (0.56%S, 9300 BTU/LB.) FIRED BOILER LOCATED IN ROCK SPRINGS, WYOMING. THE UTILITY IS CURRENTLY INVESTIGATING A RETROFIT FGD SYSTEM FOR SO2 CONTROL. A WET, SODIUM CARBONATE SYSTEM, WHICH TREATS 2,700,000 ACFM OF FLUE GAS, IS BEING PLANNED. A COLD-SIDE ESP IS CURRENTLY IN OPERATION FOR PRIMARY PARTICULATE CONTROL. START-UP IS SCHEDULED FOR 1986.
PACIFIC POWER & LIGHT JIM BRIDGER 4 NEW 550 MW (GROSS) 550 MW (ESC) COAL .56 %S SUBBITUMINOUS SODIUM CARBONATE AIR CORRECTION DIVISION, UOP ENERGY CONSUMPTION: .2% STATUS 1 STARTUP 9/79	PACIFIC POWER AND LIGHT'S JIM BRIDGER 4 IS A DRY BOTTOM PULVERIZED SUBBITUMINOUS COAL (0.56% S, 9300 BTU/LB) FIRED BOILER LOCATED IN ROCK SPRINGS, WYOMING. A 91% EFFICIENT SODIUM CARBONATE FGD SYSTEM FOR THIS UNIT WAS SUPPLIED BY THE AIR CORRECTION DIVISION OF UOP. A COLD SIDE ESP TREATS 2,720,000 ACFM OF FLUE GAS, FOLLOWED BY THREE SIEVE TRAY ABSORBERS. THE SYSTEM OPERATES IN A CLOSED WATER LOOP MODE. A SYSTEM CHECK OUT WAS CONDUCTED IN JULY 1979, AND OPERATIONS BEGAN IN SEPTEMBER 1979.
PENNSYLVANIA POWER BRUCE MANSFIELD 1 NEW 917 MW (GROSS) 917 MW (ESC) COAL 3.00 %S BITUMINOUS LIME GE ENVIRONMENTAL SERVICES ENERGY CONSUMPTION: 6.0% STATUS 1 STARTUP 12/75	BRUCE MANSFIELD 1 OF PENNSYLVANIA POWER IS A SUPERCRITICAL, BALANCED DRAFT BOILER FIRING PULVERIZED COAL (3.0% S, 11,500 BTU/LB) IN SHIPPINGPORT, PENNSYLVANIA. A GEESI THIOSORBIC LIME FGD SYSTEM WAS DESIGNED TO REMOVE FLYASH AND SO2 (92.1%) FROM 3,350,000 ACFM OF FLUE GAS. THE FGD SYSTEM CONSISTS OF SIX VARIABLE THROAT VENTURI SCRUBBERS FOLLOWED BY SIX FIXED THROAT VENTURI ABSORBERS, HORIZONTAL MIST ELIMINATORS, TWO DIRECT COMBUSTION REHEATERS (INCLUDED IN ORIGINAL DESIGN BUT LATER REMOVED FROM SERVICE) AND A 950 FOOT FLAKEGLASS STACK SHARED BY UNITS 1 AND 2. THE WATER LOOP IS OPEN, AND THE CALCILOX STABILIZED SLUDGE IS DISPOSED IN AN OFF-SITE POND. THIS SYSTEM HAS BEEN OPERATIONAL SINCE DECEMBER 1975.
PENNSYLVANIA POWER BRUCE MANSFIELD 2 NEW 917 MW (GROSS) 917 MW (ESC) COAL 3.00 %S BITUMINOUS LIME GE ENVIRONMENTAL SERVICES ENERGY CONSUMPTION: 6.0% STATUS 1 STARTUP 7/77	BRUCE MANSFIELD 2 OF PENNSYLVANIA POWER IS A SUPERCRITICAL, BALANCED DRAFT BOILER FIRING PULVERIZED COAL (3.0% S, 11,500 BTU/LB) IN SHIPPINGPORT, PENNSYLVANIA. A GEESI THIOSORBIC LIME FGD SYSTEM WAS DESIGNED TO REMOVE FLYASH AND SO2 (92.1%) FROM 3,350,000 ACFM OF FLUE GAS. THE FGD SYSTEM CONSISTS OF SIX VARIABLE THROAT VENTURI SCRUBBERS FOLLOWED BY SIX FIXED THROAT VENTURI ABSORBERS, HORIZONTAL MIST ELIMINATORS, TWO DIRECT COMBUSTION REHEATERS (INCLUDED IN ORIGINAL DESIGN BUT LATER REMOVED FROM SERVICE) AND A 950 FOOT FLAKEGLASS STACK SHARED BY UNITS 1 AND 2. THE WATER LOOP IS OPEN, AND THE CALCILOX STABILIZED SLUDGE IS DISPOSED IN AN OFF-SITE POND. THIS SYSTEM HAS BEEN OPERATIONAL SINCE JULY 1977.

SECTION 2
STATUS OF FGD SYSTEMS

UNIT IDENTIFICATION	ABSTRACT
PENNSYLVANIA POWER BRUCE MANSFIELD 3 NEW 917 MW (GROSS) 917 MW (ESC) COAL 3.00 %S LIME M.W. KELLOGG ENERGY CONSUMPTION: ****% STATUS 1 STARTUP 6/80	BRUCE MANSFIELD 3 OF PENNSYLVANIA POWER IS A SUPERCRITICAL PULVERIZED COAL (3.0% S, 11,500 BTU/LB) FIRED BOILER LOCATED IN SHIPPINGPORT, PENNSYLVANIA. FOUR ESP'S TREAT 3,308,000 ACFM OF FLUE GAS, FOLLOWED BY FIVE (ONE SPARE) M. W. KELLOGG THIOSORBIC LIME ABSORBERS WHICH REMOVE 92.2% OF THE SO2. THE CLEANED GAS PASSES THROUGH CHEVRON MIST ELIMINATORS AND DIRECT COMBUSTION REHEATERS BEFORE DISCHARGE THROUGH A 600 FOOT INCONEL 625 STACK FLUE. THE FLYASH STABILIZED SLUDGE IS PIPED TO AN OFF-SITE LANDFILL. OPERATIONS COMMENCED IN JUNE, 1980.
PHILADELPHIA ELECTRIC CROMBY 1 RETROFIT 150 MW (GROSS) 150 MW (ESC) COAL 3.00 %S MAGNESIUM OXIDE UNITED ENGINEERS ENERGY CONSUMPTION: ****% STATUS 2 STARTUP 5/83	PHILADELPHIA ELECTRIC HAS PLANS FOR THE RETROFIT OF AN FGD SYSTEM ON ONE OF THE TWO 3.0% SULFUR COAL FIRED BOILERS AT CROMBY STATION IN PHOENIXVILLE, PENNSYLVANIA. CONSTRUCTION OF THE MAGNESIUM OXIDE SYSTEM SUPPLIED BY UNITED ENGINEERS HAS COMMENCED. THE START-UP DATE IS SET FOR 1983.
PHILADELPHIA ELECTRIC EDDYSTONE 1 RETROFIT 240 MW (GROSS) 240 MW (ESC) COAL 2.60 %S MAGNESIUM OXIDE UNITED ENGINEERS ENERGY CONSUMPTION: ****% STATUS 2 STARTUP 12/82	UNIT 1 OF PHILADELPHIA ELECTRIC'S EDDYSTONE, PENNSYLVANIA STATION IS A BITUMINOUS COAL (2.6% S, 13,600 BTU/LB) FIRED UNIT WHICH USES ESP'S, MECHANICAL COLLECTORS, AND THREE PARTICLE SCRUBBERS (TWO ROD DECK SPRAY TOWERS AND ONE VENTURI) FOR PRIMARY PARTICLE CONTROL. THE UNIT 1 FGD SYSTEM WILL FOLLOW THE TWO ROD DECK SPRAY TOWERS. UNITED ENGINEERS IS SUPPLYING A MAGNESIUM OXIDE FGD SYSTEM FOR SO2 EMISSION CONTROL SIMILAR TO THE MAGNESIUM OXIDE PROTOTYPE SYSTEM THAT WAS PREVIOUSLY OPERATED AT THIS UNIT. OPERATIONS ARE SCHEDULED TO COMMENCE IN 1982.
PHILADELPHIA ELECTRIC EDDYSTONE 2 RETROFIT 334 MW (GROSS) 334 MW (ESC) COAL 2.50 %S MAGNESIUM OXIDE UNITED ENGINEERS ENERGY CONSUMPTION: ****% STATUS 2 STARTUP 12/82	EDDYSTONE 2 OF PHILADELPHIA ELECTRIC IS A 2.5% SULFUR COAL FIRED BOILER LOCATED IN EDDYSTONE, PENNSYLVANIA. THE PLANT'S GENERATING CAPACITY IS 334 MW. UNITED ENGINEERS WILL SUPPLY A MAGNESIUM OXIDE FGD SYSTEM FOR EMISSION CONTROL. START-UP IS SET FOR DECEMBER 1982.
PLAINS ELECTRIC G & T PLAINS ESCALANTE 1 NEW 233 MW (GROSS) 233 MW (ESC) COAL .80 %S SUBBITUMINOUS LIMESTONE COMBUSTION ENGINEERING ENERGY CONSUMPTION: ****% STATUS 2 STARTUP 12/83	PLAINS ESCALANTE 1 IS A PULVERIZED SUBBITUMINOUS COAL FIRED UNIT PLANNED BY PLAINS ELECTRIC G & T COOPERATIVE TO BE LOCATED IN PREWITT, NEW MEXICO. THE 233 MW UNIT WILL UTILIZE A WET LIMESTONE SCRUBBING PROCESS FOR SO2 REMOVAL AND A FABRIC FILTER FOR PRIMARY PARTICLE CONTROL. A CONTRACT HAS BEEN AWARDED TO COMBUSTION ENGINEERING FOR THE WET LIMESTONE SYSTEM. THE UNIT INITIAL START-UP IS PROJECTED FOR DECEMBER 1983.
PLATTE RIVER POWER AUTHORITY RAWHIDE 1 NEW 279 MW (GROSS) 279 MW (ESC) COAL .25 %S BITUMINOUS LIME/SPRAY DRYING JOY MFG/NIRO ATOMIZER ENERGY CONSUMPTION: ****% STATUS 3 STARTUP 12/83	THE PLATTE RIVER POWER AUTHORITY HAS PLANS TO CONSTRUCT RAWHIDE 1, IN FT. COLLINS, COLORADO. THE 279 MW PULVERIZED COAL (0.25% S, 8702 BTU/LB) FIRED BOILER WILL BE SUPPLIED BY COMBUSTION ENGINEERING. A CONTRACT HAS BEEN AWARDED TO JOY MANUFACTURING/NIRO ATOMIZER FOR A DRY LIME SCRUBBING SYSTEM FOR EMISSION CONTROL. SLUDGE WILL BE DISPOSED OF IN A LANDFILL. THE UNIT IS SCHEDULED TO COMMENCE OPERATIONS IN DECEMBER 1983.

SECTION 2
STATUS OF FGD SYSTEMS

UNIT IDENTIFICATION	ABSTRACT
PUBLIC SERVICE INDIANA GIBSON 5 NEW 650 MW (GROSS) 650 MW (ESC) COAL 3.30 %S LIMESTONE M.W. KELLOGG ENERGY CONSUMPTION: ****% STATUS 2 STARTUP 8/82	GIBSON 5 OF PUBLIC SERVICE OF INDIANA IS A 3.3% SULFUR COAL FIRED UNIT UNDER CONSTRUCTION IN PRINCETON, INDIANA. A CONTRACT WAS AWARDED TO M. W. KELLOGG FOR A LIMESTONE FGD SYSTEM CONSISTING OF FOUR KELLOGG-WEIR ABSORBER-REACTOR MODULES. SYSTEM START UP IS EXPECTED IN 1982. THE SYSTEM WILL USE KELLOGG'S PROPRIETARY MAGNESIUM-PROMOTED LIMESTONE.
PUBLIC SERVICE OF NEW MEXICO SAN JUAN 1 RETROFIT 361 MW (GROSS) 361 MW (ESC) COAL .80 %S SUBBITUMINOUS WELLMAN LORD DAVY MCKEE ENERGY CONSUMPTION: 4.4% STATUS 1 STARTUP 4/78	SAN JUAN 1 OF PUBLIC SERVICE OF NEW MEXICO IN WATERFLOW, NEW MEXICO IS A COAL (0.8% S, 8100 BTU/LB) FIRED BOILER WHICH SUPPLIES 1,319,000 ACFM OF FLUE GAS TO A RETROFIT WELLMAN LORD FGD SYSTEM BY DAVY POWERGAS. THE EMISSION CONTROL SYSTEM, OPERATIONAL SINCE APRIL 1978, CONSISTS OF A HOT SIDE ESP FOLLOWED BY FOUR (ONE SPARE) VENTURI SCRUBBER/SPRAY TOWER ABSORBER TRAINS WHICH WERE DESIGNED TO REMOVE 85% OF THE FLUE GAS SO2. AN INDIRECT HOT AIR REHEATER PRECEDES A BRICK LINED STACK. END PRODUCT ELEMENTAL SULFUR IS PRODUCED BY THE ALLIED CHEMICAL PROCESS. THE WATER LOOP IS CLOSED.
PUBLIC SERVICE OF NEW MEXICO SAN JUAN 2 RETROFIT 350 MW (GROSS) 350 MW (ESC) COAL .80 %S SUBBITUMINOUS WELLMAN LORD DAVY MCKEE ENERGY CONSUMPTION: 4.6% STATUS 1 STARTUP 8/78	SAN JUAN 2 OF PUBLIC SERVICE OF NEW MEXICO IN WATERFLOW, NEW MEXICO IS A COAL (0.8% S, 8100 BTU/LB) FIRED BOILER WHICH SUPPLIES 1,319,000 ACFM OF FLUE GAS TO A RETROFIT WELLMAN LORD FGD SYSTEM BY DAVY POWERGAS. THE EMISSION CONTROL SYSTEM, OPERATIONAL SINCE AUGUST 1978, CONSISTS OF A HOT SIDE ESP FOLLOWED BY FOUR (ONE SPARE) VENTURI SCRUBBER/SPRAY TOWER ABSORBER TRAINS WHICH WERE DESIGNED TO REMOVE 85% OF THE FLUE GAS SO2. AN INDIRECT HOT AIR REHEATER PRECEDES A BRICK LINED STACK. END PRODUCT ELEMENTAL SULFUR IS PRODUCED BY THE ALLIED CHEMICAL PROCESS. THE WATER LOOP IS CLOSED.
PUBLIC SERVICE OF NEW MEXICO SAN JUAN 3 NEW 534 MW (GROSS) 534 MW (ESC) COAL .80 %S SUBBITUMINOUS WELLMAN LORD DAVY MCKEE ENERGY CONSUMPTION: 3.6% STATUS 1 STARTUP 12/79	SAN JUAN 3 IS A COAL (0.8% S, 8100 BTU/LB) FIRED UNIT OF THE PUBLIC SERVICE OF NEW MEXICO AND IS LOCATED IN WATERFLOW, NEW MEXICO. THE FGD SYSTEM, SUPPLIED BY DAVY POWERGAS, UTILIZES THE WELLMAN LORD SO2 RECOVERY RECOVERY PROCESS AND SULFURIC ACID IS PRODUCED AS THE END PRODUCT. FIVE (ONE SPARE) VENTURI SCRUBBER/SPRAY TOWER ABSORBER (90% DESIGN SO2 REMOVAL) TRAINS FOLLOW A HOT SIDE ESP. AN INDIRECT HOT AIR REHEATER BOOSTS THE GAS TEMPERATURE 50 DEG F. THE SYSTEM OPERATES IN A CLOSED WATER LOOP MODE. OPERATIONS COMMENCED IN DECEMBER 1979.
PUBLIC SERVICE OF NEW MEXICO SAN JUAN 4 NEW 534 MW (GROSS) 534 MW (ESC) COAL .80 %S SUBBITUMINOUS WELLMAN LORD DAVY MCKEE ENERGY CONSUMPTION: 3.6% STATUS 2 STARTUP 6/82	SAN JUAN 4 IS A COAL (0.8% S, 8100 BTU/LB) FIRED UNIT OF THE PUBLIC SERVICE OF NEW MEXICO UNDER CONSTRUCTION IN WATERFLOW, NEW MEXICO. THE FGD SYSTEM, BEING SUPPLIED BY DAVY POWERGAS, WILL UTILIZE THE WELLMAN LORD SO2 RECOVERY PROCESS AND SULFURIC ACID WILL BE PRODUCED AS THE END PRODUCT. FIVE (ONE SPARE) VENTURI SCRUBBER/SPRAY TOWER ABSORBER (90% DESIGN SO2 REMOVAL) TRAINS WILL FOLLOW A HOT SIDE ESP. AN INDIRECT HOT AIR REHEATER WILL BOOST THE GAS TEMPERATURE 50 DEG F. THE SYSTEM WILL OPERATE IN A CLOSED WATER LOOP MODE. START-UP IS EXPECTED IN JUNE 1982.
PWR AUTHORITY OF STATE OF NY FOSSIL NEW 700 MW (GROSS) 700 MW (ESC) COAL 3.00 %S PROCESS NOT SELECTED VENDOR NOT SELECTED ENERGY CONSUMPTION: ****% STATUS 6 STARTUP 4/87	THE POWER AUTHORITY OF NEW YORK PLANS A NEW 3.0% SULFUR COAL FIRED UNIT WHICH WILL BE LOCATED AT THE ARTHUR KILL FACILITY ON STATEN ISLAND. THE UTILITY IS PRESENTLY CONSIDERING FGD SYSTEMS FOR THIS UNIT. PUBLIC SERVICE COMMISSION HEARINGS ARE CURRENTLY IN PROGRESS. START-UP IS EXPECTED IN APRIL 1987.

SECTION 2
STATUS OF FGD SYSTEMS

UNIT IDENTIFICATION	ABSTRACT
SALT RIVER PROJECT CORONADO 1 NEW 350 MW (GROSS) 280 MW (ESC) COAL .50 %S SUBBITUMINOUS LIMESTONE M.W. KELLOGG ENERGY CONSUMPTION: 4.3% STATUS 1 STARTUP 11/79	SALT RIVER PROJECT'S CORONADO 1 IS A DRY BOTTOM PULVERIZED SUBBITUMINOUS COAL (0.5% S, 12,000 BTU/LB) FIRED BOILER LOCATED IN ST. JOHNS, ARIZONA. M. W. KELLOGG SUPPLIED THE TWO LIMESTONE HORIZONTAL WEIR SPRAY TOWERS WHICH REMOVE 82.5% OF THE SO2 FROM THE FLUE GAS PASSED THROUGH THEM. VERTICAL HEIL MIST ELIMINATORS PRECEDE A 500 FOOT STACK. A MINIMUM OF 20% BYPASS PROVIDES REHEAT. THE WATER LOOP IS OPEN, AND THE UNSTABILIZED SLUDGE IS DISPOSED OF IN AN UNLINED POND. START-UP WAS IN NOVEMBER 1979.
SALT RIVER PROJECT CORONADO 2 NEW 350 MW (GROSS) 280 MW (ESC) COAL .50 %S SUBBITUMINOUS LIMESTONE M.W. KELLOGG ENERGY CONSUMPTION: 4.3% STATUS 1 STARTUP 7/80	SALT RIVER PROJECT'S CORONADO 2 IS A DRY BOTTOM PULVERIZED SUBBITUMINOUS COAL (0.5% S, 12,000 BTU/LB) FIRED BOILER LOCATED IN ST. JOHNS, ARIZONA. M. W. KELLOGG SUPPLIED TWO LIMESTONE HORIZONTAL WEIR SPRAY TOWERS WHICH REMOVE 82.5% OF THE SO2 FROM THE FLUE GAS PASSED THROUGH THEM. VERTICAL HEIL MIST ELIMINATORS PRECEDE A 500 FOOT STACK. A MINIMUM OF 20% BYPASS PROVIDES REHEAT. THE WATER LOOP IS OPEN, AND THE UNSTABILIZED SLUDGE IS DISPOSED OF IN AN UNLINED POND. START-UP WAS IN JULY 1980.
SALT RIVER PROJECT CORONADO 3 NEW 400 MW (GROSS) 280 MW (ESC) COAL .60 %S SUBBITUMINOUS LIMESTONE VENDOR NOT SELECTED ENERGY CONSUMPTION: 3.8% STATUS 6 STARTUP 0/89	CORONADO 3 IS A DRY BOTTOM PULVERIZED SUBBITUMINOUS COAL (.60% S, 8300 BTU /LB) FIRED UNIT PLANNED BY SALT RIVER PROJECT TO BE LOCATED IN ST. JOHN'S, ARIZONA. THE UTILITY IS PRESENTLY CONSIDERING THE INSTALLATION OF TWO HORIZONTAL SPRAY TOWERS UTILIZING LIMESTONE AS THE ABSORBENT. PLANS FOR AN EMISSION CONTROL SYSTEM HAVE NOT BEEN FINALIZED. THE SYSTEM WILL HAVE A 20% BYPASS REHEAT, AND THE SLUDGE WILL PROBABLY BE PONDED. SCHEDULED OPERATION DATE IS 1989.
SAN MIGUEL ELECTRIC SAN MIGUEL 1 NEW 400 MW (GROSS) 400 MW (ESC) COAL 1.70 %S LIGNITE LIMESTONE BABCOCK & WILCOX ENERGY CONSUMPTION: 5.0% STATUS 1 STARTUP 8/81	SAN MIGUEL 1 OF THE SAN MIGUEL ELECTRIC COOP IS A LIGNITE (1.7% S, 5000 BTU/LB) FIRED RADIANT BOILER LOCATED IN SAN MIGUEL, TEXAS. THE EMISSION CONTROL SYSTEM ON THIS UNIT CONSISTS OF A COLD SIDE ESP FOLLOWED BY FOUR BABCOCK AND WILCOX 86% EFFICIENT LIMESTONE TCA MODULES. CHEVRON MIST ELIMINATORS PRECEDE AN IN-LINE REHEATER AND AN ACID BRICK LINED STACK. THE WATER LOOP IS CLOSED, AND THE DEWATERED SLURRY IS MIXED WITH FLYASH BY RESEARCH COTTRELL AND DISPOSED OF IN AN OFF-SITE LANDFILL. OPERATIONS COMMENCED IN AUGUST 1981.
SEMINOLE ELECTRIC SEMINOLE 1 NEW 620 MW (GROSS) 620 MW (ESC) COAL 2.75 %S SUBBITUMINOUS LIMESTONE PEABODY PROCESS SYSTEMS ENERGY CONSUMPTION: ****% STATUS 2 STARTUP 3/83	SEMINOLE 1 OF SEMINOLE ELECTRIC IS A COAL (2.75% S, 11,700 BTU/LB) FIRED UNIT PLANNED FOR LOCATION IN PALATKA, FLORIDA. THE EMISSION CONTROL SYSTEM WILL CONSIST OF ESP'S AND A LIMESTONE FGD SYSTEM. THE FGD SYSTEM WILL BE SUPPLIED BY PEABODY PROCESS SYSTEMS. START-UP IS EXPECTED IN MARCH 1983.
SEMINOLE ELECTRIC SEMINOLE 2 NEW 620 MW (GROSS) 620 MW (ESC) COAL 2.75 %S SUBBITUMINOUS LIMESTONE PEABODY PROCESS SYSTEMS ENERGY CONSUMPTION: ****% STATUS 3 STARTUP 1/85	SEMINOLE 2 OF SEMINOLE ELECTRIC IS A COAL (2.75% S, 11,700 BTU/LB) FIRED UNIT PLANNED FOR LOCATION IN PALATKA, FLORIDA. THE EMISSION CONTROL SYSTEM WILL CONSIST OF ESP'S AND A LIMESTONE FGD SYSTEM. THE FGD SYSTEM WILL BE SUPPLIED BY PEABODY SYSTEMS. START-UP IS EXPECTED IN JANUARY 1985.

SECTION 2
STATUS OF FGD SYSTEMS

UNIT IDENTIFICATION	ABSTRACT
SIERRA PACIFIC POWER VALMY 2 NEW 276 MW (GROSS) 276 MW (ESC) COAL ***** %S LIME/SPRAY DRYING VENDOR NOT SELECTED ENERGY CONSUMPTION: ****% STATUS 7 STARTUP 8/84	SIERRA PACIFIC POWER HAS PLANS TO CONSTRUCT A 276 MW UNIT TO BE LOCATED IN VALMY, NEVADA. THE FOSTER WHEELER PULVERIZED COAL FIRED BOILER AT THE VALMY 2 STATION WILL UTILIZE AN FGD SYSTEM OR FIRE LOW SULFUR COAL TO CONTROL SO2 EMISSIONS. IF FGD IS SELECTED, A DRY LIME SYSTEM WILL BE UTILIZED. THE UNIT IS SCHEDULED TO COMMENCE OPERATIONS IN AUGUST 1984.
SIKESTON BRD OF MUNICIPAL UTIL SIKESTON 1 NEW 235 MW (GROSS) 235 MW (ESC) COAL 2.80 %S BITUMINOUS LIMESTONE BABCOCK & WILCOX ENERGY CONSUMPTION: 1.7% STATUS 1 STARTUP 6/81	THE SIKESTON BOARD OF MUNICIPAL UTILITIES' SIKESTON 1 IS A PULVERIZED COAL (2.8% S, 11,340 BTU/LB) FIRED BOILER LOCATED IN SIKESTON, MISSOURI. BABCOCK AND WILCOX SUPPLIED THE EMISSION CONTROL SYSTEM CONSISTING OF TWO ESP'S AND THREE 50% CAPACITY LIMESTONE VENTURI FGD MODULES. THE CLEANED GAS PASSES THROUGH CHEVRON MIST ELIMINATORS BEFORE EXITING A 450 FOOT FRP LINED FLUE (A SECOND CARBON STEEL LINED FLUE, USED FOR EMERGENCY BYPASS, IS ALSO IN THE STACK). THE WATER LOOP MODE IS OPEN, AND THE SLUDGE IS PONDED. THE SYSTEM STARTED OPERATIONS IN JUNE 1981.
SOUTH CAROLINA PUBLIC SERVICE CROSS 1 NEW 500 MW (GROSS) 500 MW (ESC) COAL 1.80 %S BITUMINOUS LIMESTONE PEABODY PROCESS SYSTEMS ENERGY CONSUMPTION: ****% STATUS 3 STARTUP 5/88	SOUTH CAROLINA PUBLIC SERVICE HAS PLANS TO CONSTRUCT TWO NEW UNITS, CROSS 1 AND 2, TO BE LOCATED IN CROSS, SOUTH CAROLINA. EACH 500 MW BOILER WILL FIRE COAL WITH A SULFUR CONTENT RANGING BETWEEN 1.0 AND 2.3%. THE UTILITY HAS SIGNED A CONTRACT WITH PEABODY PROCESS SYSTEMS FOR THE INSTALLATION OF A WET LIMESTONE SCRUBBING SYSTEM TO CONTROL SO2 EMISSIONS. UNIT 1 IS SCHEDULED TO COMMENCE OPERATIONS IN MAY 1988.
SOUTH CAROLINA PUBLIC SERVICE CROSS 2 NEW 500 MW (GROSS) 500 MW (ESC) COAL 1.80 %S BITUMINOUS LIMESTONE PEABODY PROCESS SYSTEMS ENERGY CONSUMPTION: ****% STATUS 2 STARTUP 11/83	SOUTH CAROLINA PUBLIC SERVICE HAS PLANS TO CONSTRUCT TWO NEW UNITS, CROSS 1 AND 2, TO BE LOCATED IN CROSS, SOUTH CAROLINA. EACH 500 MW BOILER WILL FIRE COAL WITH A SULFUR CONTENT RANGING BETWEEN 1.0 AND 2.3%. CONSTRUCTION OF THE WET LIMESTONE SCRUBBING SYSTEM BEING SUPPLIED BY PEABODY PROCESS SYSTEMS FOR SO2 CONTROL HAS COMMENCED. UNIT 2 IS SCHEDULED TO COMMENCE OPERATIONS IN NOVEMBER 1983.
SOUTH CAROLINA PUBLIC SERVICE WINYAH 2 NEW 280 MW (GROSS) 140 MW (ESC) COAL 1.10 %S BITUMINOUS LIMESTONE BABCOCK & WILCOX ENERGY CONSUMPTION: 1.1% STATUS 1 STARTUP 7/77	WINYAH 2 OF SOUTH CAROLINA PUBLIC SERVICE IS A PULVERIZED BITUMINOUS COAL (1.70% S, 11,500 BTU/LB) FIRED UNIT LOCATED IN GEORGETOWN, SOUTH CAROLINA. A COLD SIDE ESP AND A BABCOCK AND WILCOX VENTURI SCRUBBER/LIMESTONE TRAY TOWER ABSORBER TRAIN DESIGNED TO REMOVE 45% OF THE SO2 FROM THE BOILER FLUE GAS MAKE UP THE EMISSION CONTROL SYSTEM ON THIS UNIT. THE SYSTEM OPERATES IN AN OPEN WATER LOOP, AND THE SLUDGE IS DISPOSED IN AN ON-SITE UNLINED POND. THIS SYSTEM HAS BEEN OPERATIONAL SINCE JULY 1977.
SOUTH CAROLINA PUBLIC SERVICE WINYAH 3 NEW 280 MW (GROSS) 280 MW (ESC) COAL 1.10 %S LIMESTONE BABCOCK & WILCOX ENERGY CONSUMPTION: 2.1% STATUS 1 STARTUP 5/80	WINYAH 3 OF SOUTH CAROLINA PUBLIC SERVICE IS A DRY BOTTOM BOILER WHICH FIRES 1.7% SULFUR COAL (11,500 BTU/LB) AND IS LOCATED IN GEORGETOWN, SOUTH CAROLINA. AN ESP PRECEDES A BABCOCK AND WILCOX LIMESTONE FGD SYSTEM AND AN INDIRECT STEAM REHEATER. THE SYSTEM OPERATES IN A CLOSED WATER LOOP MODE. OPERATIONS COMMENCED IN MAY 1980.

SECTION 2
STATUS OF FGD SYSTEMS

UNIT IDENTIFICATION	ABSTRACT
SOUTH CAROLINA PUBLIC SERVICE WINYAH 4 NEW 280 MW (GROSS) 280 MW (ESC) COAL 1.70 %S BITUMINOUS LIMESTONE AMERICAN AIR FILTER ENERGY CONSUMPTION: 2.1% STATUS 1 STARTUP 7/81	SOUTH CAROLINA PUBLIC SERVICE'S WINYAH 4 IS A BITUMINOUS COAL (1.70% S, 11,500 BTU/LB) FIRED UNIT LOCATED IN GEORGETOWN, SOUTH CAROLINA. TWO AMERICAN AIR FILTER LIMESTONE SLURRY SPRAY TOWERS FOLLOW AN ESP. THE TEMPERATURE OF THE CLEANED GAS IS RAISED BY AN INDIRECT STEAM REHEATER. THE SYSTEM OPERATES IN A CLOSED WATER LOOP MODE. INITIAL OPERATIONS COMMENCED IN JULY 1981.
SOUTH MISSISSIPPI ELEC PWR R.D. MORROW, SR. 1 NEW 200 MW (GROSS) 124 MW (ESC) COAL 1.30 %S BITUMINOUS LIMESTONE ENVIRONEERING, RILEY STOKER ENERGY CONSUMPTION: 5.5% STATUS 1 STARTUP 8/78	R.D. MORROW 1 OF SOUTHERN MISSISSIPPI ELECTRIC IS A PULVERIZED COAL (1.3% S, 12,000 BTU/LB) FIRED UNIT IN HATTISBURG, MISSISSIPPI. THE EMISSION CONTROL SYSTEM FOR THIS UNIT CONSISTS OF A HOT SIDE ESP FOLLOWED BY A LIMESTONE VENTRI-ROD ABSORBER SUPPLIED BY RILEY STOKER/ENVIRONEERING. AFTER THE CLEANED GAS PASSES THROUGH A VERTICAL CHEVRON MIST ELIMINATOR, IT IS JOINED BY A 38% BYPASS REHEAT BEFORE IT IS DISCHARGED THROUGH A 408 FOOT STACK SHARED BY UNITS 1 AND 2 (EACH UNIT HAS ITS OWN ACID BRICK LINED FLUE). THE WATER LOOP IS CLOSED, AND THE FLYASH STABILIZED SLUDGE IS HAULED BY TRUCK TO AN OFF-SITE LANDFILL. THE SYSTEM HAS BEEN OPERATIONAL SINCE AUGUST 1978.
SOUTH MISSISSIPPI ELEC PWR R.D. MORROW, SR. 2 NEW 200 MW (GROSS) 124 MW (ESC) COAL 1.30 %S BITUMINOUS LIMESTONE ENVIRONEERING, RILEY STOKER ENERGY CONSUMPTION: 5.5% STATUS 1 STARTUP 6/79	R.D. MORROW 2 OF SOUTHERN MISSISSIPPI ELECTRIC IS A PULVERIZED COAL (1.3% S, 12,000 BTU/LB) FIRED UNIT IN HATTISBURG, MISSISSIPPI. THE EMISSION CONTROL SYSTEM FOR THIS UNIT CONSISTS OF A HOT SIDE ESP FOLLOWED BY A LIMESTONE VENTRI-ROD ABSORBER SUPPLIED BY RILEY STOKER/ENVIRONEERING. AFTER THE CLEANED GAS PASSES THROUGH A VERTICAL CHEVRON MIST ELIMINATOR, IT IS JOINED BY A 38% BYPASS REHEAT BEFORE IT IS DISCHARGED THROUGH A 408 FOOT STACK SHARED BY UNITS 1 AND 2 (EACH UNIT HAS ITS OWN ACID BRICK LINED FLUE). THE WATER LOOP IS CLOSED, AND THE FLYASH STABILIZED SLUDGE IS HAULED BY TRUCK TO AN OFF-SITE LANDFILL. THE SYSTEM HAS BEEN OPERATIONAL SINCE JUNE 1979.
SOUTHERN ILLINOIS POWER MARION 4 NEW 173 MW (GROSS) 173 MW (ESC) COAL/REFUS 3.75 %S BITUMINOUS LIMESTONE BABCOCK & WILCOX ENERGY CONSUMPTION: 2.3% STATUS 1 STARTUP 5/79	UNIT 4 AT SOUTHERN ILLINOIS POWER COOP'S MARION STATION IN MARION, ILLINOIS IS A CYCLONE FIRED COAL (3.5% S, 9000 BTU/LB) BOILER WHICH IS SERVED BY A 89.4% EFFICIENT (DESIGN) LIMESTONE FGD SYSTEM SUPPLIED BY BABCOCK AND WILCOX. TWO SPRAY TOWERS AND A BRICK LINED STACK ARE DOWNSTREAM OF AN ESP IN THIS SYSTEM. THE WATER LOOP IS OPEN, AND THE FLYASH STABILIZED SLUDGE IS DEWATERED AND LANDFILLED. THE SYSTEM BECAME OPERATIONAL DURING MAY 1979.
SOUTHERN INDIANA GAS & ELEC A.B. BROWN 1 NEW 265 MW (GROSS) 265 MW (ESC) COAL 3.35 %S BITUMINOUS DUAL ALKALI FMC ENERGY CONSUMPTION: .8% STATUS 1 STARTUP 3/79	SOUTHERN INDIANA GAS AND ELECTRIC'S A.B.BROWN 1 IS A DRY BOTTOM PULVERIZED COAL (3.35% S, 13,010 BTU/LB) FIRED UNIT IN WEST FRANKLIN, INDIANA. FMC SUPPLIED A DUAL ALKALI FGD SYSTEM DESIGNED TO REMOVE 85% OF THE FLUE GAS SO2. THE UNIT CONSISTS OF TWO THREE STAGE DISC CONTACTORS. A COLD SIDE ESP PROVIDES PRIMARY PARTICULATE CONTROL, AND ONE CHEVRON MIST ELIMINATOR/MODULE PRECEDES A 498 FOOT ACID BRICK LINED STACK. THE SYSTEM PRODUCES A FILTER CAKE WASTE PRODUCT WHICH IS DISPOSED IN AN ON-SITE LANDFILL. THE WATER LOOP CAN BE EITHER OPEN OR CLOSED. THE SYSTEM HAS BEEN OPERATIONAL SINCE MARCH 1979.
SOUTHERN INDIANA GAS & ELEC A.B. BROWN 2 265 MW (GROSS) 265 MW (ESC) COAL 3.35 %S BITUMINOUS PROCESS NOT SELECTED VENDOR NOT SELECTED ENERGY CONSUMPTION: .8% STATUS 5 STARTUP 1/85	SOUTHERN INDIANA GAS AND ELECTRIC HAS PLANS TO CONSTRUCT ANOTHER UNIT, A.B. BROWN 2, TO BE LOCATED IN WEST FRANKLIN, INDIANA. THE 265-MW (GROSS) UNIT WILL FIRE BITUMINOUS COAL WITH AN AVERAGE SULFUR CONTENT OF 3.35%. A COLD SIDE ESP WILL PROVIDE PRIMARY PARTICULATE MATTER CONTROL AND AN FGD SYSTEM WILL BE USED TO CONTROL SO2 EMISSIONS. THE FLUE GAS WILL EXIT THROUGH A 498-FOOT STACK. THE SYSTEM WILL OPERATE IN A CLOSED WATER LOOP MODE AND THE SLUDGE WILL BE DISPOSED IN AN ON-SITE LANDFILL. OPERATIONS ARE SCHEDULED TO COMMENCE IN JANUARY 1985.

SECTION 2
STATUS OF FGD SYSTEMS

UNIT IDENTIFICATION	ABSTRACT
SOUTHWESTERN ELECTRIC POWER DOLET HILLS 1 NEW 720 MW (GROSS) 720 MW (ESC) COAL .70 %S LIGNITE LIMESTONE AIR CORRECTION DIVISION, UOP ENERGY CONSUMPTION: ****% STATUS 3 STARTUP 3/86	DOLET HILLS 1 OF SOUTHWESTERN ELECTRIC POWER IS A PLANNED 720 MW LIGNITE (0.7%S, 7100 BTU/LB) FIRED BOILER TO BE LOCATED IN MANSFIELD, LOUISIANA. THE EMISSION CONTROL SYSTEM WILL CONSIST OF AN ESP FOR PARTICULATE CONTROL AND A WET LIMESTONE FGD SYSTEM FOR SO2 CONTROL. THE FLUE GAS WILL EXIT THROUGH A 525 FOOT STACK. A CONTRACT HAS BEEN AWARDED TO UOP FOR THE FGD SYSTEM. THE UNIT IS SCHEDULED TO START-UP IN 1986.
SOUTHWESTERN ELECTRIC POWER DOLET HILLS 2 NEW 720 MW (GROSS) 720 MW (ESC) COAL .70 %S LIGNITE LIMESTONE VENDOR NOT SELECTED ENERGY CONSUMPTION: ****% STATUS 6 STARTUP 0/88	DOLET HILLS 2 OF SOUTHWESTERN ELECTRIC POWER IS A PLANNED 720 MW LIGNITE (0.7%S, 7100 BTU/LB) FIRED BOILER TO BE LOCATED IN MANSFIELD, LOUISIANA. THE EMISSION CONTROL SYSTEM WILL CONSIST OF AN ESP FOR PARTICULATE CONTROL AND A WET LIMESTONE FGD SYSTEM FOR SO2 CONTROL. THE FLUE GAS WILL EXIT THROUGH A 525 FOOT STACK. THE UNIT IS SCHEDULED TO BEGIN OPERATIONS IN 1988.
SOUTHWESTERN ELECTRIC POWER HENRY W. PIRKEY 1 NEW 720 MW (GROSS) 720 MW (ESC) COAL .80 %S LIGNITE LIMESTONE AIR CORRECTION DIVISION, UOP ENERGY CONSUMPTION: ****% STATUS 3 STARTUP 12/84	HENRY W. PIRKEY 1 IS A WET BOTTOM LIGNITE (0.8% S, 6300 BTU/LB) FIRED UNIT PLANNED BY SOUTHWESTERN ELECTRIC POWER FOR LOCATION IN HALLSVILLE, TEXAS. A CONTRACT HAS BEEN AWARDED TO THE AIR CORRECTION DIVISION OF UOP FOR FOUR LIMESTONE SPRAY TOWERS (99+% EFFICIENCY). MIST ELIMINATION WILL BE PROVIDED BY TWO STAGE CHEVRONS, AND THE STACK WILL BE ACID BRICK LINED. NO REHEAT IS PLANNED. THE WATER LOOP WILL BE CLOSED, AND THE SLUDGE WILL BE POZ-O-TEC STABILIZED. START-UP IS EXPECTED BY DECEMBER 1984.
SOYLAND POWER SOYLAND 1 NEW 500 MW (GROSS) 500 MW (ESC) COAL 3.00 %S UNDECIDED PROCESS NOT SELECTED VENDOR NOT SELECTED ENERGY CONSUMPTION: ****% STATUS 6 STARTUP 6/87	SOYLAND POWER COOP HAS PLANS FOR A NEW UNIT, SOYLAND 1, TO BE LOCATED IN ILLINOIS. THE COAL FIRED BOILER IS TO BE RATED AT 500 MW (GROSS) AND UTILIZE A FGD SYSTEM TO CONTROL EMISSIONS. OPERATIONS ARE SCHEDULED TO COMMENCE IN 1987.
SPRINGFIELD CITY UTILITIES SOUTHWEST 1 NEW 194 MW (GROSS) 194 MW (ESC) COAL 3.50 %S BITUMINOUS LIMESTONE AIR CORRECTION DIVISION, UOP ENERGY CONSUMPTION: 4.6% STATUS 1 STARTUP 4/77	SPRINGFIELD CITY UTILITIES' SOUTHWEST 1 IS A PULVERIZED BITUMINOUS COAL (3.5% S, 12,500 BTU/LB) FIRED BOILER LOCATED IN SPRINGFIELD, MISSOURI. THE EMISSION CONTROL SYSTEM FOR THIS UNIT CONSISTS OF A COLD SIDE ESP FOLLOWED BY TWO UOP LIMESTONE TCA MODULES WHICH WERE DESIGNED TO REMOVE 80% OF THE FLUE GAS SO2. ONE CHEVRON/MODULE LEADS TO A 384 FOOT CEILCOTE LINED STACK. THE DRY FLYASH STABILIZED SLUDGE IS DEWATERED BY A ROTARY DRUM VACUUM FILTER AND TRUCKED TO A LANDFILL. OPERATIONS COMMENCED IN APRIL 1977.
SPRINGFIELD WATER, LIGHT & PWR DALLMAN 3 NEW 205 MW (GROSS) 185 MW (ESC) COAL 3.30 %S BITUMINOUS LIMESTONE RESEARCH-COTTRELL ENERGY CONSUMPTION: 4.9% STATUS 1 STARTUP 12/80	DALLMAN 3 OF SPRINGFIELD WATER, LIGHT, AND POWER IS A PULVERIZED COAL (3.3% S, 10,500 BTU/LB) FIRED BOILER LOCATED IN SPRINGFIELD, ILLINOIS. RESEARCH COTTRELL SUPPLIED A LIMESTONE FGD SYSTEM DESIGNED TO REMOVE 95% OF THE SO2 FROM 850,000 ACFM OF BOILER FLUE GAS. A HOT SIDE ESP PRECEDES TWO PACKED TOWER ABSORBERS, ONE HORIZONTAL CHEVRON PER MODULE, AND A 500 FOOT ACID BRICK LINED STACK. NO REHEAT IS PROVIDED. SLUDGE IS DISPOSED OF IN A LANDFILL. FGD OPERATIONS COMMENCED IN OCTOBER 1980.

SECTION 2
STATUS OF FGD SYSTEMS

UNIT IDENTIFICATION	ABSTRACT
ST. JOE ZINC G.F. WEATON 1 RETROFIT 60 MW (GROSS) 60 MW (ESC) COAL 2.00 %S BITUMINOUS CITRATE MORRISON & KNUDSEN/U.S.B.M. ENERGY CONSUMPTION: ****% STATUS 1 STARTUP 11/79	G.F. WEATON 1, OWNED BY ST. JOE ZINC, IS A COAL (2.0% S, 12,500 BTU/LB) FIRED BOILER LOCATED IN MONACA, PENNSYLVANIA. THE BUREAU OF MINES RETROFITTED A PROTOTYPE CITRATE FGD SYSTEM ON THIS UNIT, WHICH PROVIDES POWER FOR THE LOCAL UTILITY GRID. ONE VENTURI SCRUBBER/ABSORBER TRAIN FOLLOWS A COLD SIDE ESP. TWO CHEVRON MIST ELIMINATORS ARE FOLLOWED BY A COMBINATION OF INDIRECT HOT AIR AND DIRECT COMBUSTION REHEATERS, AND A 102 FOOT FIBERGLASS LINED SCRUBBER STACK. THE SYSTEM SO2 REMOVAL EFFICIENCY WILL BE OVER 90%. THE WATER LOOP IS CLOSED LOOP MODE. THE FGD SYSTEM COMMENCED OPERATION IN NOVEMBER 1979.
SUNFLOWER ELECTRIC HOLCOMB 1 NEW 347 MW (GROSS) 347 MW (ESC) COAL .47 %S SUBBITUMINOUS LIME/SPRAY DRYING JOY MFG/NIRO ATOMIZER ENERGY CONSUMPTION: .9% STATUS 2 STARTUP 9/83	SUNFLOWER ELECTRIC COOP'S HOLCOMB 1 STATION IS A PLANNED 347 MW UNIT TO BE LOCATED IN HOLCOMB, KANSAS. THE PULVERIZED COAL (0.47% S, 8800 BTU/LB) FIRED BABCOCK AND WILCOX BOILER WILL UTILIZE A JOY MANUFACTURING/NIRO ATOMIZER DRY SCRUBBING PROCESS FOR SO2 CONTROL. A FABRIC FILTER WILL BE UTILIZED FOR PRIMARY PARTICLE CONTROL. THE UNIT IS SCHEDULED TO COMMENCE OPERATIONS IN THE FALL OF 1983.
TAMPA ELECTRIC BIG BEND 4 NEW 475 MW (GROSS) 475 MW (ESC) COAL 2.35 %S LIME/LIMESTONE RESEARCH-COTTRELL ENERGY CONSUMPTION: 2.1% STATUS 3 STARTUP 3/85	UNIT 4 AT TAMPA ELECTRIC'S BIG BEND STATION IS A PLANNED DRY BOTTOM PULVERIZED COAL (2.35% S, 10,300 BTU/LB) FIRED UNIT TO BE LOCATED IN TAMPA, FLORIDA. A CONTRACT HAS BEEN AWARDED TO RESEARCH-COTTRELL FOR A WET LIME/LIMESTONE SCRUBBING PROCESS. AN ESP WILL PROVIDE PRIMARY PARTICULATE CONTROL. THE FGD SYSTEM, WHICH WILL REMOVE 90% OF THE FLUE GAS SO2, WILL INCLUDE AN INDIRECT HOT AIR REHEATER LEADING TO A 490 FOOT CONCRETE LINED STACK. THE UNIT WILL PRODUCE GYPSUM AS A SALEABLE PRODUCT.
TENNESSEE VALLEY AUTHORITY PARADISE 1 RETROFIT 704 MW (GROSS) 704 MW (ESC) COAL 4.20 %S LIMESTONE GE ENVIRONMENTAL SERVICES ENERGY CONSUMPTION: ****% STATUS 2 STARTUP 0/83	PARADISE 1 OF TVA IS A 4.2% SULFUR COAL FIRED UNIT LOCATED IN PARADISE, KENTUCKY. A CONTRACT HAS BEEN AWARDED TO GEESI FOR AN 84.2% EFFICIENT LIMESTONE FGD SYSTEM TO BE RETROFITTED ON THIS BOILER. SIX VENTURI SCRUBBERS AND VENTURI ABSORBER TRAINS WILL FOLLOW AN ESP. INLET FLUE GAS WILL BE USED TO HEAT GLYCOL, WHICH IN TURN WILL BE USED TO REHEAT THE OUTLET FLUE GAS. FORCED OXIDATION WILL BE USED IN ONE MODULE TO CONTROL SCALING THROUGHOUT THE SYSTEM. THE UTILITY EXPECTS TO GET AN 80% SOLIDS LANDFILLABLE GRADE SLUDGE. OPERATIONS SHOULD START IN 1983.
TENNESSEE VALLEY AUTHORITY PARADISE 2 RETROFIT 704 MW (GROSS) 704 MW (ESC) COAL 4.20 %S LIMESTONE GE ENVIRONMENTAL SERVICES ENERGY CONSUMPTION: ****% STATUS 2 STARTUP 0/83	PARADISE 2 OF TVA IS A 4.2% SULFUR COAL FIRED UNIT LOCATED IN PARADISE, KENTUCKY. A CONTRACT HAS BEEN AWARDED TO GEESI FOR AN 84.2% EFFICIENT LIMESTONE FGD SYSTEM TO BE RETROFITTED ON THIS BOILER. SIX VENTURI SCRUBBERS AND VENTURI ABSORBER TRAINS WILL FOLLOW AN ESP. INLET FLUE GAS WILL BE USED TO HEAT GLYCOL, WHICH IN TURN WILL BE USED TO REHEAT THE OUTLET FLUE GAS. FORCED OXIDATION WILL BE USED IN ONE MODULE TO CONTROL SCALING THROUGHOUT THE SYSTEM. THE UTILITY EXPECTS TO GET AN 80% SOLIDS LANDFILLABLE GRADE SLUDGE. OPERATIONS SHOULD START IN 1983.
TENNESSEE VALLEY AUTHORITY SHAWNEE 10A RETROFIT 10 MW (GROSS) 10 MW (ESC) COAL 2.90 %S BITUMINOUS LIME/LIMESTONE AIR CORRECTION DIVISION, UOP ENERGY CONSUMPTION: ****% STATUS 1 STARTUP 4/72	SHAWNEE 10 OF TVA IS A 2.9% SULFUR BITUMINOUS COAL FIRED BOILER LOCATED IN PADUCAH, KENTUCKY. MODULE 10A IS A RETROFIT PROTOTYPE LIME/LIMESTONE TCA SYSTEM SUPPLIED BY THE AIR CORRECTION DIVISION, UOP. THE SYSTEM UTILIZES A CHEVRON MIST ELIMINATOR AND A DIRECT COMBUSTION REHEATER, AND OPERATES IN A CLOSED WATER LOOP. THIS TEST PROGRAM WAS FUNDED BY EPA WITH TVA AS THE CONSTRUCTOR AND FACILITY OPERATOR. THE BECHTEL CORP. OF SAN FRANCISCO WAS THE MAJOR CONTRACTOR, TEST DIRECTOR, AND REPORT WRITER. THE SYSTEM HAS BEEN OPERATIONAL SINCE APRIL 1972.

SECTION 2
STATUS OF FGD SYSTEMS

UNIT IDENTIFICATION	ABSTRACT
TENNESSEE VALLEY AUTHORITY SHAWNEE 10B RETROFIT 10 MW (GROSS) 10 MW (ESC) COAL 2.90 %S BITUMINOUS LIME/LIMESTONE GE ENVIRONMENTAL SERVICES ENERGY CONSUMPTION: ****% STATUS 1 STARTUP 4/72	SHAWNEE 10 OF TVA IS A 2.9% SULFUR BITUMINOUS COAL FIRED BOILER LOCATED IN PADUCAH, KENTUCKY. MODULE 10B IS A RETROFIT PROTOTYPE LIME/LIMESTONE VENTURI SCRUBBER/SPRAY TOWER ABSORBER SUPPLIED BY GEESI. THE SYSTEM, OPERATIONAL SINCE APRIL 1972, INCLUDES A CHEVRON MIST ELIMINATOR AND A DIRECT COMBUSTION REHEATER, AND OPERATES IN A CLOSED WATER LOOP. THIS TEST PROGRAM WAS FUNDED BY EPA WITH TVA AS THE CONSTRUCTOR AND FACILITY OPERATOR. THE BECHTEL CORP. OF SAN FRANCISCO WAS THE MAJOR CONTRACTOR, TEST DIRECTOR, AND REPORT WRITER.
TENNESSEE VALLEY AUTHORITY WIDOWS CREEK 7 RETROFIT 575 MW (GROSS) 575 MW (ESC) COAL 3.70 %S BITUMINOUS LIMESTONE COMBUSTION ENGINEERING ENERGY CONSUMPTION: ****% STATUS 1 STARTUP 3/81	WIDOWS CREEK 7 IS A PULVERIZED BITUMINOUS COAL (3.7% S, 11,100 BTU/LB) FIRED BOILER OF TVA LOCATED IN BRIDGEPORT, ALABAMA. COMBUSTION ENGINEERING SUPPLIED A LIMESTONE VENTRI ROD SCRUBBER/SPRAY TOWER ABSORBER FGD SYSTEM ON THIS UNIT. AN ESP PRECEDES THE SCRUBBING TRAIN, AND A COMBINATION OF A BULK ENTRAINMENT SEPERATOR, TWO CHEVRON MIST ELIMINATORS AND A FINNED TUBE REHEATER FOLLOWS THE SYSTEM. THE SCRUBBER SLUDGE IS DISPOSED OF IN A SLUDGE POND. OPERATIONS COMMENCED IN MARCH 1981.
TENNESSEE VALLEY AUTHORITY WIDOWS CREEK 8 RETROFIT 550 MW (GROSS) 550 MW (ESC) COAL 3.70 %S BITUMINOUS LIMESTONE TENNESSEE VALLEY AUTHORITY ENERGY CONSUMPTION: 4.7% STATUS 1 STARTUP 5/77	WIDOWS CREEK 8 OF TVA IS A BALANCED DRAFT, TANGENTIALLY FIRED COAL (3.7% S, 10,000 BTU/LB) BOILER IN BRIDGEPORT, ALABAMA. TVA RETROFITTED THIS UNIT WITH A LIMESTONE FGD SYSTEM (80% DESIGN SO2 REMOVAL EFFICIENCY) WHICH BEGAN OPERATIONS IN MAY 1977. AN ESP PRECEDES FOUR VARIABLE THROAT VENTURI SCRUBBER/MULTIGRID TOWER ABSORBER TRAINS (ONE OF THE TOWERS IS PACKED). ONE VERTICAL CHEVRON/TRAIN AND AN INDIRECT HOT AIR REHEATER ARE INCLUDED IN THE SYSTEM. SLUDGE FROM THE FGD SYSTEM IS PONDED.
TEXAS MUNICIPAL POWER AGENCY GIBBONS CREEK 1 NEW 443 MW (GROSS) 400 MW (ESC) COAL 1.06 %S LIGNITE LIMESTONE COMBUSTION ENGINEERING ENERGY CONSUMPTION: 1.4% STATUS 2 STARTUP 10/82	GIBBONS CREEK 1 OF THE TEXAS MUNICIPAL POWER AGENCY IS A DRY BOTTOM PULVERIZED LIGNITE (1.06% S, 4860 BTU/LB) FIRED UNIT PLANNED FOR LOCATION IN CARLOS, TEXAS. THE EMISSION CONTROL SYSTEM WILL CONSIST OF A COLD SIDE ESP FOLLOWED BY THREE 50% CAPACITY LIMESTONE SPRAY TOWERS. A CONTRACT HAS BEEN AWARDED TO COMBUSTION ENGINEERING FOR THE FGD SYSTEM, WHICH INCLUDES A CHEVRON MIST ELIMINATOR AND A STEAM COIL REHEATER. CLEANED FLUE GAS WILL BE DISCHARGED THROUGH A 465 FOOT ACID BRICK LINED STACK. THE POZ-O-TEC STABILIZED SLUDGE WILL BE USED AS STRIP MINE LANDFILL. START-UP IS EXPECTED IN OCTOBER 1982.
TEXAS POWER & LIGHT SANDOW 4 NEW 545 MW (GROSS) 382 MW (ESC) COAL 1.60 %S LIGNITE LIMESTONE COMBUSTION ENGINEERING ENERGY CONSUMPTION: ****% STATUS 1 STARTUP 12/80	SANDOW 4 IS A PULVERIZED 1.6% SULFUR LIGNITE FIRED BOILER OF TEXAS POWER AND LIGHT LOCATED IN ROCKDALE, TEXAS. COMBUSTION ENGINEERING HAS SUPPLIED THREE LIMESTONE SPRAY TOWERS FOR THIS UNIT. A COLD SIDE ESP IS PROVIDING PRIMARY PARTICULATE CONTROL. A 30% BYPASS REHEAT IS BEING USED, AND THE OVERALL SO2 REMOVAL EFFICIENCY IS 75%. THE SYSTEM OPERATES IN A CLOSED WATER LOOP, AND THE SLUDGE IS BEING PONDED. OPERATIONS COMMENCED IN DECEMBER 1980.
TEXAS POWER & LIGHT TWIN OAKS 1 NEW 750 MW (GROSS) 750 MW (ESC) COAL .70 %S LIGNITE LIMESTONE GE ENVIRONMENTAL SERVICES ENERGY CONSUMPTION: ****% STATUS 3 STARTUP 8/85	TWIN OAKS 1 IS A 0.70% SULFUR LIGNITE FIRED BOILER PLANNED BY TEXAS POWER AND LIGHT AND ALCOA FOR LOCATION IN BREMOND, TEXAS. A CONTRACT HAS BEEN AWARDED TO GEESI FOR A LIMESTONE FGD SYSTEM ON THIS UNIT. START-UP IS EXPECTED IN AUGUST 1985.

SECTION 2
STATUS OF FGD SYSTEMS

UNIT IDENTIFICATION	ABSTRACT
TEXAS POWER & LIGHT TWIN OAKS 2 NEW 750 MW (GROSS) 750 MW (ESC) COAL .70 %S LIGNITE LIMESTONE GE ENVIRONMENTAL SERVICES ENERGY CONSUMPTION: ****% STATUS 3 STARTUP 8/87	TWIN OAKS 2 IS A 0.70% SULFUR LIGNITE FIRED BOILER PLANNED BY TEXAS POWER AND LIGHT AND ALCOA FOR LOCATION IN BREMOND, TEXAS. A CONTRACT HAS BEEN AWARDED TO GEESI FOR A LIMESTONE FGD SYSTEM ON THIS UNIT. START-UP IS EXPECTED IN AUGUST 1987.
TEXAS UTILITIES FOREST GROVE 1 NEW 750 MW (GROSS) 750 MW (ESC) COAL .80 %S LIGNITE PROCESS NOT SELECTED VENDOR NOT SELECTED ENERGY CONSUMPTION: ****% STATUS 5 STARTUP 0/87	TEXAS UTILITIES IS PLANNING A LIGNITE (0.8% S, 7000 BTU/LB) FIRED BOILER, FOREST GROVE 1, WHICH WILL BE LOCATED IN ATHENS, TEXAS. THE UTILITY IS PRESENTLY REQUESTING BIDS ON AN FGD SYSTEM FOR THIS UNIT. TWO ESP'S WILL PROVIDE PRIMARY PARTICULATE CONTROL, AND NO STACK GAS REHEAT IS PLANNED. START-UP IS EXPECTED IN LATE 1987.
TEXAS UTILITIES MARTIN LAKE 1 NEW 793 MW (GROSS) 595 MW (ESC) COAL .90 %S LIGNITE LIMESTONE RESEARCH-COTTRELL ENERGY CONSUMPTION: 1.3% STATUS 1 STARTUP 4/77	TEXAS UTILITIES' MARTIN LAKE 1 IS A LIGNITE (0.9% S, 7380 BTU/LB) FIRED BOILER IN TATUM, TEXAS. THIS UNIT IS EQUIPPED WITH AN EMISSION CONTROL SYSTEM WHICH INCLUDES A COLD SIDE ESP AND A LIMESTONE FGD SYSTEM, BOTH SUPPLIED BY RESEARCH COTTRELL. THE FGD SYSTEM CONSISTS OF SIX PACKED SPRAY TOWER ABSORBERS WHICH TREAT 75% OF THE TOTAL BOILER FLUE GAS. THE REMAINING FLUE GAS IS BYPASSED FOR REHEAT. THE TOTAL DESIGN SO2 REMOVAL EFFICIENCY IS 70.5%. TWO CHEVRONS/MODULE PROVIDE MIST ELIMINATION. THE FLUE GAS CLEANING WASTES ARE FLYASH STABILIZED AND DISPOSED IN AN ON-SITE LANDFILL. THE SYSTEM OPERATES IN A CLOSED WATER LOOP. INITIAL SYSTEM OPERATIONS TOOK PLACE IN APRIL 1977.
TEXAS UTILITIES MARTIN LAKE 2 NEW 793 MW (GROSS) 595 MW (ESC) COAL .90 %S LIGNITE LIMESTONE RESEARCH-COTTRELL ENERGY CONSUMPTION: 1.3% STATUS 1 STARTUP 5/78	TEXAS UTILITIES' MARTIN LAKE 2 IS A LIGNITE (0.9% S, 7380 BTU/LB) FIRED BOILER IN TATUM, TEXAS. THIS UNIT IS EQUIPPED WITH AN EMISSION CONTROL SYSTEM WHICH INCLUDES A COLD SIDE ESP AND A LIMESTONE FGD SYSTEM, BOTH SUPPLIED BY RESEARCH COTTRELL. THE FGD SYSTEM CONSISTS OF SIX PACKED SPRAY TOWER ABSORBERS WHICH TREAT 75% OF THE TOTAL BOILER FLUE GAS. THE REMAINING FLUE GAS IS BYPASSED FOR REHEAT. THE TOTAL DESIGN SO2 REMOVAL EFFICIENCY IS 70.5%. TWO CHEVRONS/MODULE PROVIDE MIST ELIMINATION. THE FLUE GAS CLEANING WASTES ARE FLYASH STABILIZED AND DISPOSED IN AN ON-SITE LANDFILL. THE SYSTEM OPERATES IN A CLOSED WATER LOOP. INITIAL SYSTEM OPERATIONS TOOK PLACE IN MAY 1978.
TEXAS UTILITIES MARTIN LAKE 3 NEW 793 MW (GROSS) 595 MW (ESC) COAL .90 %S LIGNITE LIMESTONE RESEARCH-COTTRELL ENERGY CONSUMPTION: 1.3% STATUS 1 STARTUP 2/79	TEXAS UTILITIES' MARTIN LAKE 3 IS A LIGNITE (0.9% S, 7380 BTU/LB) FIRED BOILER IN TATUM, TEXAS. THIS UNIT IS EQUIPPED WITH AN EMISSION CONTROL SYSTEM WHICH INCLUDES A COLD SIDE ESP AND A LIMESTONE FGD SYSTEM, BOTH SUPPLIED BY RESEARCH COTTRELL. THE FGD SYSTEM CONSISTS OF SIX PACKED SPRAY TOWER ABSORBERS WHICH TREAT 75% OF THE TOTAL BOILER FLUE GAS. THE REMAINING FLUE GAS IS BYPASSED FOR REHEAT. THE TOTAL DESIGN SO2 REMOVAL EFFICIENCY IS 70.5%. TWO CHEVRONS/MODULE PROVIDE MIST ELIMINATION. THE FLUE GAS CLEANING WASTES ARE FLYASH STABILIZED AND DISPOSED IN AN ON-SITE LANDFILL. THE SYSTEM OPERATES IN A CLOSED WATER LOOP. INITIAL SYSTEM OPERATIONS TOOK PLACE IN FEBRUARY 1979.
TEXAS UTILITIES MARTIN LAKE 4 NEW 750 MW (GROSS) 750 MW (ESC) COAL .90 %S LIGNITE LIMESTONE RESEARCH-COTTRELL ENERGY CONSUMPTION: ****% STATUS 3 STARTUP 0/89	MARTIN LAKE 4 OF TEXAS UTILITIES IS A LIGNITE (0.9% S, 7380 BTU/LB) FIRED BOILER UNDER CONSTRUCTION IN TATUM, TEXAS. A CONTRACT FOR A LIMESTONE FGD SYSTEM FOR THIS UNIT HAS BEEN AWARDED TO RESEARCH COTTRELL. CONSTRUCTION HAS NOT YET BEGUN ON THE FGD SYSTEM. FGD START-UP IS EXPECTED IN 1989.

SECTION 2
STATUS OF FGD SYSTEMS

UNIT IDENTIFICATION	ABSTRACT
TEXAS UTILITIES MILL CREEK 1 NEW 750 MW (GROSS) 750 MW (ESC) COAL ***** %S LIGNITE PROCESS NOT SELECTED VENDOR NOT SELECTED ENERGY CONSUMPTION: ****% STATUS 6 STARTUP 0/87	MILL CREEK 1 OF TEXAS UTILITIES IS A PLANNED LIGNITE FIRED UNIT TO BE LOCATED IN HENDERSON, TEXAS. THE UTILITY WILL INCLUDE AN FGD SYSTEM ON THIS UNIT, BUT NO DECISIONS HAVE BEEN MADE AS TO THE PROCESS TYPE OR VENDOR. ESP'S WILL PROVIDE PRIMARY PARTICLE CONTROL. START-UP IS EXPECTED IN 1987.
TEXAS UTILITIES MILL CREEK 2 NEW 750 MW (GROSS) 750 MW (ESC) COAL ***** %S LIGNITE PROCESS NOT SELECTED VENDOR NOT SELECTED ENERGY CONSUMPTION: ****% STATUS 6 STARTUP 0/88	MILL CREEK 2 OF TEXAS UTILITIES IS A PLANNED LIGNITE FIRED UNIT TO BE LOCATED IN HENDERSON, TEXAS. THE UTILITY WILL INCLUDE AN FGD SYSTEM ON THIS UNIT, BUT NO DECISIONS HAVE BEEN MADE AS TO THE PROCESS TYPE OR VENDOR. ESP'S WILL PROVIDE PRIMARY PARTICLE CONTROL. START-UP IS EXPECTED IN 1988.
TEXAS UTILITIES MONTICELLO 3 NEW 800 MW (GROSS) 800 MW (ESC) COAL 1.50 %S LIGNITE LIMESTONE GE ENVIRONMENTAL SERVICES ENERGY CONSUMPTION: ****% STATUS 1 STARTUP 5/78	MONTICELLO 3 OF TEXAS UTILITIES IS A LIGNITE (1.5% S, 7000 BTU/LB) FIRED UNIT IN MT. PLEASANT, TEXAS. THIS UNIT'S EMISSION CONTROL SYSTEM CONSISTS OF TWO COLD SIDE ESP'S FOLLOWED BY THREE GEESI LIMESTONE SPRAY TOWERS (74% DESIGN SO2 REMOVAL EFFICIENCY), ONE HORIZONTAL CHEVRON MIST ELIMINATOR/MODULE, AND AN INDIRECT HOT AIR REHEATER. THE WATER LOOP IS CLOSED, AND THE FLYASH STABILIZED SLUDGE IS DISPOSED IN AN ON-SITE LANDFILL. THIS SYSTEM HAS BEEN OPERATIONAL SINCE MAY 1978.
TUCSON ELECTRIC POWER SPRINGERVILLE 1 NEW 370 MW (GROSS) 370 MW (ESC) COAL .61 %S SUBBITUMINOUS LIME/SPRAY DRYING JOY MFG/NIRO ATOMIZER ENERGY CONSUMPTION: ****% STATUS 3 STARTUP 2/85	TUCSON ELECTRIC POWER WILL BE BUILDING TWO NEW UNITS IN SPRINGERVILLE, ARIZONA, SPRINGERVILLE 1 AND 2. THE UNITS WILL FIRE PULVERIZED SUBBITUMINOUS COAL (0.53-0.69% S AND 8500-8900 BTU/LB). A CONTRACT HAS BEEN AWARDED TO JOY MANUFACTURING/NIRO ATOMIZER FOR A LIME/SPRAY DRYING FGD SYSTEM TO CONTROL PARTICULATE MATTER AND SO2 EMISSIONS. THE SYSTEM WILL BE DESIGNED TO ACCOMODATE A REHEATER (SHOULD ONE BE REQUIRED) AND WILL OPERATE IN A CLOSED WATER LOOP. CLEANED FLUE GAS WILL EXIT THE SYSTEM VIA A 500 FOOT CONCRETE STACK. START-UP IS SCHEDULED FOR FEBRUARY 1985.
TUCSON ELECTRIC POWER SPRINGERVILLE 2 NEW 370 MW (GROSS) 370 MW (ESC) COAL .61 %S SUBBITUMINOUS LIME/SPRAY DRYING JOY MFG/NIRO ATOMIZER ENERGY CONSUMPTION: ****% STATUS 3 STARTUP 3/87	TUCSON GAS AND ELECTRIC WILL BE BUILDING TWO NEW UNITS IN SPRINGERVILLE, ARIZONA, SPRINGERVILLE 1 AND 2. THE UNITS WILL FIRE PULVERIZED SUBBITUMINOUS COAL (0.53-0.69% S AND 8500-8900 BTU/LB). A CONTRACT HAS BEEN AWARDED TO JOY MANUFACTURING/NIRO ATOMIZER FOR A LIME/SPRAY DRYING FGD SYSTEM TO CONTROL PARTICULATE MATTER AND SO2 EMISSIONS. THE SYSTEM WILL BE DESIGNED TO ACCOMODATE A REHEATER (SHOULD ONE BE REQUIRED) AND WILL OPERATE IN A CLOSED WATER LOOP. CLEANED FLUE GAS WILL EXIT THE SYSTEM VIA A 500 FOOT CONCRETE STACK. START-UP IS SCHEDULED FOR MARCH 1987.
UNITED POWER ASSOCIATION STANTON 1A NEW 60 MW (GROSS) 50 MW (ESC) COAL .77 %S LIGNITE LIME/SPRAY DRYING RESEARCH-COTTRELL ENERGY CONSUMPTION: ****% STATUS 2 STARTUP 6/82	STANTON 1A OF THE UNITED POWER ASSOCIATION IS A PULVERIZED COAL (0.77% S, 7000 BTU/LB) FIRED UNIT UNDER CONSTRUCTION IN STANTON, NORTH DAKOTA. A CONTRACT HAS BEEN AWARDED TO KOMLINE AND SANDERSON FOR A LIME SPRAY DRYER. A FABRIC FILTER SUPPLIED BY RESEARCH COTTRELL WILL BE DESIGNED TO REMOVE 99% OF THE PARTICULATE. THE SYSTEM WILL OPERATE IN AN OPEN LOOP MODE WITH SLUDGE DISPOSAL TO BE IN A CLAY LINED SETTLING POND. OPERATIONS ARE SCHEDULED TO COMMENCE IN JUNE 1982.

SECTION 2
STATUS OF FGD SYSTEMS

UNIT IDENTIFICATION	ABSTRACT
UTAH POWER & LIGHT HUNTER 1 NEW 400 MW (GROSS) 360 MW (ESC) COAL .55 %S BITUMINOUS LIME GE ENVIRONMENTAL SERVICES ENERGY CONSUMPTION: ****% STATUS 1 STARTUP 5/79	HUNTER 1 OF UTAH POWER AND LIGHT IS A COAL (0.55% S, 12,500 BTU/LB) FIRED UNIT IN CASTLEDALE, UTAH. GEESI SUPPLIED A PEBBLE LIME WET SCRUBBING SYSTEM WHICH BECAME OPERATIONAL IN MAY 1979. THE SCRUBBING SYSTEM IS DESIGNED TO OPERATE IN AN OPEN WATER LOOP WITH AN SO2 REMOVAL EFFICIENCY OF 80%. PRIMARY PARTICULATE CONTROL IS PROVIDED BY AN UPSTREAM ESP, AND STACK GAS REHEAT IS PROVIDED BY BYPASS. THE SLUDGE IS FLYASH STABILIZED AND DISPOSED ON-SITE.
UTAH POWER & LIGHT HUNTER 2 NEW 400 MW (GROSS) 360 MW (ESC) COAL .55 %S LIME GE ENVIRONMENTAL SERVICES ENERGY CONSUMPTION: ****% STATUS 1 STARTUP 6/80	UTAH POWER AND LIGHT'S HUNTER 2 IS A COAL (0.55% S, 12,500 BTU/LB) FIRED UNIT LOCATED IN CASTLEDALE, UTAH. FOR EMISSION CONTROL, GEESI SUPPLIED A PEBBLE LIME WET SCRUBBING SYSTEM DESIGNED TO OPERATE IN AN OPEN WATER LOOP WITH AN SO2 REMOVAL EFFICIENCY OF 80%. AN UPSTREAM ESP PROVIDES PRIMARY PARTICLE CONTROL, AND A BYPASS SYSTEM PROVIDES STACK GAS REHEAT. THE SLUDGE IS FLYASH STABILIZED AND DISPOSED OF ON-SITE. START-UP OF BOTH THE BOILER AND FGD SYSTEM TOOK PLACE IN JUNE 1980.
UTAH POWER & LIGHT HUNTER 3 NEW 400 MW (GROSS) 400 MW (ESC) COAL .55 %S BITUMINOUS LIMESTONE GE ENVIRONMENTAL SERVICES ENERGY CONSUMPTION: ****% STATUS 2 STARTUP 6/83	HUNTER 3 OF UTAH POWER AND LIGHT IS A PULVERIZED COAL (0.55% S, 12500 BTU/LB) FIRED UNIT UNDER CONSTRUCTION IN CASTLEDALE, UTAH. A CONTRACT HAS BEEN AWARDED TO GEESI FOR A LIMESTONE, NONREGENERABLE FGD UNIT FOR EMISSION CONTROL. INITIAL OPERATIONS ARE SCHEDULED TO COMMENCE IN JUNE 1983.
UTAH POWER & LIGHT HUNTER 4 NEW 400 MW (GROSS) 400 MW (ESC) COAL .55 %S BITUMINOUS LIMESTONE GE ENVIRONMENTAL SERVICES ENERGY CONSUMPTION: ****% STATUS 2 STARTUP 6/85	HUNTER 4 OF UTAH POWER AND LIGHT IS A PULVERIZED COAL (0.55% S, 12500 BTU/LB) FIRED UNIT UNDER CONSTRUCTION IN CASTELDALE, UTAH. A CONTRACT HAS BEEN AWARDED TO GEESI FOR A LIMESTONE, NONREGENERABLE FGD UNIT FOR EMISSION CONTROL. INITIAL OPERATIONS ARE SCHEDULED TO COMMENCE IN JUNE 1985.
UTAH POWER & LIGHT HUNTINGTON 1 NEW 430 MW (GROSS) 366 MW (ESC) COAL .55 %S BITUMINOUS LIME GE ENVIRONMENTAL SERVICES ENERGY CONSUMPTION: 1.6% STATUS 1 STARTUP 5/78	HUNTINGTON 1 OF UTAH POWER IS A TANGENTIALLY FIRED PULVERIZED COAL (0.55% S, 12,500 BTU/LB) BOILER IN PRICE, UTAH. A COLD SIDE ESP TREATS 1,742,000 ACFM OF FLUE GAS AND IS FOLLOWED BY A GEESI LIME FGD SYSTEM CONSISTING OF FOUR SPRAY TOWERS (80% DESIGN EFFICIENCY). ONE FOUR PASS CHEVRON/MODULE PROVIDES MIST ELIMINATION, AND A COMBINATION OF A STEAM TUBE AND 10-20% BYPASS REHEATERS BOOST THE GAS TEMPERATURE 45-50 DEG F. THE SYSTEM OPERATES IN A CLOSED WATER LOOP, AND THE FLYASH STABILIZED SLUDGE IS TRUCKED TO AN ON-SITE LANDFILL. THE SYSTEM INCLUDES A 600 FOOT ACID BRICK LINED STACK, AND HAS BEEN OPERATIONAL SINCE MAY 1978.
UTAH POWER & LIGHT NAUGHTON 3 RETROFIT 330 MW (GROSS) 330 MW (ESC) COAL .55 %S SUBBITUMINOUS SODIUM CARBONATE AIR CORRECTION DIVISION, UOP ENERGY CONSUMPTION: 1.5% STATUS 1 STARTUP 9/81	NAUGHTON 3 OF UTAH POWER AND LIGHT IS A PULVERIZED COAL (.5% S, 9500 BTU/LB) FIRED BOILER LOCATED IN KEMMERER, WYOMING. THE BOILER SUPPLIES 1,500,000 ACFM OF FLUE GAS TO AN ESP FOR PARTICULATE MATTER CONTROL. THE UNIT WAS RETROFITTED WITH A UOP WET SODA ASH FGD SYSTEM FOR SO2 CONTROL. THE FGD SYSTEM IS DESIGNED TO REMOVE 70% OF THE SO2 BEFORE THE FLUE GAS EXITS OUT A 475 FOOT STACK. INITIAL START-UP TOOK PLACE IN SEPTEMBER 1981.

SECTION 2
STATUS OF FGD SYSTEMS

UNIT IDENTIFICATION	ABSTRACT
WASHINGTON WATER POWER CRESTON COAL 1 NEW 570 MW (GROSS) 570 MW (ESC) COAL ***** %S UNKNOWN LIMESTONE VENDOR NOT SELECTED ENERGY CONSUMPTION: ****% STATUS 6 STARTUP 0/87	WASHINGTON WATER POWER HAS PLANS FOR A NEW UNIT, CRESTON COAL 1, TO BE LOCATED IN CRESTON, WASHINGTON. THE COAL FIRED BOILER WILL HAVE A GROSS GENERATING CAPACITY OF 570 MW AND WILL UTILIZE A WET LIMESTONE FGD SYSTEM FOR CONTROL OF SO2 EMISSIONS. FGD OPERATIONS ARE SCHEDULED TO COMMENCE IN 1987.
WASHINGTON WATER POWER CRESTON COAL 2 NEW 570 MW (GROSS) 570 MW (ESC) COAL ***** %S UNKNOWN LIMESTONE VENDOR NOT SELECTED ENERGY CONSUMPTION: ****% STATUS 6 STARTUP 0/87	WASHINGTON WATER POWER HAS PLANS FOR A NEW UNIT, CRESTON 2, TO BE LOCATED IN CRESTON, WASHINGTON. THE COAL FIRED BOILER WILL HAVE A GROSS GENERATING CAPACITY OF 570 MW AND WILL USE A WET LIMESTONE FGD SYSTEM FOR CONTROL OF SO2 EMISSIONS. FGD OPERATIONS ARE SCHEDULED TO COMMENCE IN 1987.
WASHINGTON WATER POWER CRESTON COAL 3 NEW 570 MW (GROSS) 570 MW (ESC) COAL ***** %S UNKNOWN LIMESTONE VENDOR NOT SELECTED ENERGY CONSUMPTION: 12.3% STATUS 6 STARTUP 0/87	WASHINGTON WATER POWER HAS PLANS FOR A NEW UNIT, CRESTON 3, TO BE LOCATED IN CRESTON, WASHINGTON. THE COAL FIRED BOILER WILL HAVE A GROSS GENERATING CAPACITY OF 570 MW AND WILL USE A WET LIMESTONE FGD SYSTEM FOR CONTROL OF SO2 EMISSIONS. FGD OPERATIONS ARE SCHEDULED TO COMMENCE IN 1987.
WASHINGTON WATER POWER CRESTON COAL 4 NEW 570 MW (GROSS) 570 MW (ESC) COAL ***** %S UNKNOWN LIMESTONE VENDOR NOT SELECTED ENERGY CONSUMPTION: 12.3% STATUS 6 STARTUP 0/87	WASHINGTON WATER POWER HAS PLANS FOR A NEW UNIT, CRESTON 4, TO BE LOCATED IN CRESTON, WASHINGTON. THE COAL FIRED BOILER WILL HAVE A GROSS GENERATING CAPACITY OF 570 MW AND WILL USE A WET LIMESTONE FGD SYSTEM FOR CONTROL OF SO2 EMISSIONS. FGD OPERATIONS ARE SCHEDULED TO COMMENCE IN 1987.
WEST PENN POWER MITCHELL 33 RETROFIT 300 MW (GROSS) 300 MW (ESC) COAL 2.80 %S BITUMINOUS LIME GE ENVIRONMENTAL SERVICES ENERGY CONSUMPTION: 1.0% STATUS 2 STARTUP 8/82	UNIT 33 AT ALLEGHENY POWER SYSTEM'S MITCHELL POWER STATION IN COURTNEY, PENNSYLVANIA IS A 2.8% SULFUR COAL FIRED BOILER UNDER CONSTRUCTION. A CONTRACT WAS AWARDED TO GEESI FOR A LIME SCRUBBING PROCESS. THE SYSTEM WILL BE DESIGNED WITH AN SO2 REMOVAL EFFICIENCY OF 95%. START UP IS SCHEDULED FOR AUGUST 1982.
WEST TEXAS UTILITIES OKLAUNION 1 NEW 720 MW (GROSS) 504 MW (ESC) COAL .34 %S SUBBITUMINOUS PROCESS NOT SELECTED GE ENVIRONMENTAL SERVICES ENERGY CONSUMPTION: ****% STATUS 3 STARTUP 12/86	WEST TEXAS UTILITIES HAS PLANS TO BUILD TWO PULVERIZED COAL FIRED BOILERS TO BE LOCATED NEAR OKLAUNION, TEXAS. THE UTILITY HAS SIGNED A CONTRACT WITH GENERAL ELECTRIC ENVIRONMENTAL SERVICES FOR AN FGD SYSTEM TO CONTROL SO2 EMISSIONS FROM THIS UNIT. INITIAL OPERATIONS ARE SCHEDULED FOR 12/86.

SECTION 2
STATUS OF FGD SYSTEMS

UNIT IDENTIFICATION	ABSTRACT
WEST TEXAS UTILITIES OKLAUNION 2 NEW 720 MW (GROSS) 720 MW (ESC) COAL .34 %S SUBBITUMINOUS PROCESS NOT SELECTED VENDOR NOT SELECTED ENERGY CONSUMPTION: ****% STATUS 6 STARTUP 0/90	WEST TEXAS UTILITIES HAS PLANS TO BUILD TWO PULVERIZED COAL FIRED BOILERS TO BE LOCATED NEAR OKLAUNION, TEXAS. THE UTILITY WILL INCLUDE AN FGD SYSTEM FOR EMISSION CONTROL FROM THE 720 MW UNIT. THE OKLAUNION 2 PLANT IS SCHEDULED TO COMMENCE OPERATIONS IN 1990.

Section 3, pages 47-851,
appears in Volume II.

SECTION 4
SUMMARY OF FGD SYSTEMS BY COMPANY

	TOTAL		STATUS: OPERATIONAL		CONSTRUCTION		CONTRACT AWARDED		PLANNED	
COMPANY NAME	NO.	MW	NO.	MW	NO.	MW	NO.	MW	NO.	MW
ALABAMA ELECTRIC	2	358.	2	358.	0	0.	0	0.	0	0.
ARIZONA ELECTRIC POWER	2	196.	2	196.	0	0.	0	0.	0	0.
ARIZONA PUBLIC SERVICE	8	2598.	6	1088.	2	1510.	0	0.	0	0.
ASSOCIATED ELECTRIC	1	670.	0	0.	1	670.	0	0.	0	0.
ATLANTIC CITY ELECTRIC	1	330.	0	0.	0	0.	0	0.	1	330.
BASIN ELECTRIC POWER	5	2590.	2	1140.	3	1450.	0	0.	0	0.
BIG RIVERS ELECTRIC	4	1364.	2	484.	1	440.	1	440.	0	0.
CAJUN ELECTRIC POWER	6	3328.	0	0.	0	0.	0	0.	6	3328.
CENTRAL ILLINOIS LIGHT	2	866.	1	416.	0	0.	0	0.	1	450.
CENTRAL ILLINOIS PUBLIC SERV	1	617.	1	617.	0	0.	0	0.	0	0.
CENTRAL MAINE POWER	1	600.	0	0.	0	0.	0	0.	1	600.
CENTRAL POWER & LIGHT	1	720.	0	0.	0	0.	0	0.	1	720.
CINCINNATI GAS & ELECTRIC	2	1300.	1	650.	0	0.	0	0.	1	650.
COLORADO UTE ELECTRIC	3	1267.	2	820.	1	447.	0	0.	0	0.
COLUMBUS & SOUTHERN OHIO ELEC	4	1572.	2	822.	0	0.	0	0.	2	750.
COMMONWEALTH EDISON	1	450.	1	450.	0	0.	0	0.	0	0.
COOPERATIVE POWER ASSOCIATION	2	654.	2	654.	0	0.	0	0.	0	0.
DELMARVA POWER & LIGHT	4	730.	3	180.	0	0.	0	0.	1	550.
DESERET GEN & TRANS	2	820.	0	0.	1	410.	0	0.	1	410.
DUQUESNE LIGHT	2	918.	2	918.	0	0.	0	0.	0	0.
EAST KENTUCKY POWER	2	1150.	0	0.	1	500.	1	650.	0	0.
FLORIDA POWER & LIGHT	2	1600.	0	0.	0	0.	0	0.	2	1600.
GENERAL PUBLIC UTILITIES	5	3190.	0	0.	0	0.	0	0.	5	3190.
GRAND HAVEN BRD OF LIGHT & PWR	1	65.	0	0.	1	65.	0	0.	0	0.
HOOSIER ENERGY	2	882.	1	441.	1	441.	0	0.	0	0.
HOUSTON LIGHTING & POWER	3	1992.	0	0.	1	492.	2	1500.	0	0.
INDIANAPOLIS POWER & LIGHT	5	3012.	1	532.	1	530.	0	0.	3	1950.
IOWA ELECTRIC LIGHT & PWR	1	720.	0	0.	0	0.	0	0.	1	720.
JACKSONVILLE ELEC AUTHORITY	2	1200.	0	0.	0	0.	0	0.	2	1200.
KANSAS CITY POWER & LIGHT	3	1054.	3	1054.	0	0.	0	0.	0	0.
KANSAS POWER & LIGHT	4	1575.	4	1575.	0	0.	0	0.	0	0.
KENTUCKY UTILITIES	3	1364.	1	64.	0	0.	0	0.	2	1300.
LAKELAND UTILITIES	1	364.	0	0.	1	364.	0	0.	0	0.
LANSING BOARD OF WATER & LIGHT	1	160.	0	0.	0	0.	0	0.	1	160.
LOS ANGELES DEPT OF WTR & PWR	4	3280.	0	0.	0	0.	0	0.	4	3280.
LOUISVILLE GAS & ELECTRIC	10	3539.	7	1894.	1	495.	0	0.	2	1150.
LOWER COLORADO RIVER AUTH	1	435.	0	0.	0	0.	0	0.	1	435.
MARQUETTE BOARD OF LIGHT & PWR	1	44.	0	0.	1	44.	0	0.	0	0.
MICHIGAN SO CENTRAL PWR AGENCY	1	55.	0	0.	1	55.	0	0.	0	0.
MIDDLE SOUTH UTILITIES	6	5340.	0	0.	0	0.	0	0.	6	5340.
MINNESOTA POWER & LIGHT	1	475.	1	475.	0	0.	0	0.	0	0.
MINNKOTA POWER	1	185.	1	185.	0	0.	0	0.	0	0.
MONONGAHELA POWER	2	1336.	2	1336.	0	0.	0	0.	0	0.
MONTANA POWER	4	2120.	2	720.	2	1400.	0	0.	0	0.
MONTANA-DAKOTA UTILITIES	1	440.	1	440.	0	0.	0	0.	0	0.
MUSCATINE POWER & WATER	1	166.	0	0.	1	166.	0	0.	0	0.
NEBRASKA PUBLIC POWER DISTRICT	1	650.	0	0.	0	0.	0	0.	1	650.
NEVADA POWER	8	2625.	3	375.	0	0.	0	0.	5	2250.
NEW YORK STATE ELEC & GAS	1	625.	0	0.	0	0.	0	0.	1	625.
NIAGARA MOHAWK POWER	1	100.	0	0.	1	100.	0	0.	0	0.
NORTHERN INDIANA PUB SERVICE	3	957.	1	115.	1	421.	1	421.	0	0.
NORTHERN STATES POWER	5	2600.	3	1590.	0	0.	0	0.	2	1010.
PACIFIC GAS & ELECTRIC	2	1600.	0	0.	0	0.	0	0.	2	1600.
PACIFIC POWER & LIGHT	5	2300.	1	550.	1	100.	0	0.	3	1650.
PENNSYLVANIA POWER	3	2751.	3	2751.	0	0.	0	0.	0	0.
PHILADELPHIA ELECTRIC	3	724.	0	0.	3	724.	0	0.	0	0.
PLAINS ELECTRIC G & T	1	233.	0	0.	1	233.	0	0.	0	0.
PLATTE RIVER POWER AUTHORITY	1	279.	0	0.	0	0.	1	279.	0	0.
PUBLIC SERVICE INDIANA	1	650.	0	0.	1	650.	0	0.	0	0.
PUBLIC SERVICE OF NEW MEXICO	4	1779.	3	1245.	1	534.	0	0.	0	0.

NOTE - PLANNED STATUS INCLUDES LETTER OF INTENT SIGNED, REQUESTING/EVALUATING BIDS, AND CONSIDERING ONLY FGD SYSTEMS

SECTION 4
SUMMARY OF FGD SYSTEMS BY COMPANY

	TOTAL		STATUS: OPERATIONAL		CONSTRUCTION		CONTRACT AWARDED		PLANNED	
COMPANY NAME	NO.	MW	NO.	MW	NO.	MW	NO.	MW	NO.	MW
PWR AUTHORITY OF STATE OF NY	1	700.	0	0.	0	0.	0	0.	1	700.
SALT RIVER PROJECT	3	840.	2	560.	0	0.	0	0.	1	280.
SAN MIGUEL ELECTRIC	1	400.	1	400.	0	0.	0	0.	0	0.
SEMINOLE ELECTRIC	2	1240.	0	0.	1	620.	1	620.	0	0.
SIKESTON BPD OF MUNICIPAL UTIL	1	235.	1	235.	0	0.	0	0.	0	0.
SOUTH CAROLINA PUBLIC SERVICE	5	1700.	3	700.	1	500.	1	500.	0	0.
SOUTH MISSISSIPPI ELEC PWR	2	248.	2	248.	0	0.	0	0.	0	0.
SOUTHERN ILLINOIS POWER	1	173.	1	173.	0	0.	0	0.	0	0.
SOUTHERN INDIANA GAS & ELEC	2	530.	1	265.	0	0.	0	0.	1	265.
SOUTHWESTERN ELECTRIC POWER	3	2160.	0	0.	0	0.	2	1440.	1	720.
SOYLAND POWER	1	500.	0	0.	0	0.	0	0.	1	500.
SPRINGFIELD CITY UTILITIES	1	194.	1	194.	0	0.	0	0.	0	0.
SPRINGFIELD WATER, LIGHT & PWR	1	185.	1	185.	0	0.	0	0.	0	0.
ST. JOE ZINC	1	60.	1	60.	0	0.	0	0.	0	0.
SUNFLOWER ELECTRIC	1	347.	0	0.	1	347.	0	0.	0	0.
TAMPA ELECTRIC	1	475.	0	0.	0	0.	1	475.	0	0.
TENNESSEE VALLEY AUTHORITY	6	2553.	4	1145.	2	1408.	0	0.	0	0.
TEXAS MUNICIPAL POWER AGENCY	1	400.	0	0.	1	400.	0	0.	0	0.
TEXAS POWER & LIGHT	3	1882.	1	382.	0	0.	2	1500.	0	0.
TEXAS UTILITIES	8	5585.	4	2585.	0	0.	1	750.	3	2250.
TUCSON ELECTRIC POWER	2	740.	0	0.	0	0.	2	740.	0	0.
UNITED POWER ASSOCIATION	1	50.	0	0.	1	50.	0	0.	0	0.
UTAH POWER & LIGHT	6	2216.	4	1416.	2	800.	0	0.	0	0.
WASHINGTON WATER POWER	4	2280.	0	0.	0	0.	0	0.	4	2280.
WEST PENN POWER	1	300.	0	0.	1	300.	0	0.	0	0.
WEST TEXAS UTILITIES	2	1224.	0	0.	0	0.	1	504.	1	720.
TOTALS	222	102781.	94	32683.	40	16666.	17	9819.	71	43613.

NOTE - PLANNED STATUS INCLUDES LETTER OF INTENT SIGNED, REQUESTING/EVALUATING BIDS, AND CONSIDERING ONLY FGD SYSTEMS

SECTION 5
SUMMARY OF FGD SYSTEMS BY SYSTEM SUPPLIER

	TOTAL		STATUS: OPERATIONAL		STATUS: CONSTRUCTION		STATUS: CONTRACT AWARDED	
SYSTEM SUPPLIER/PROCESS	NO.	MW	NO.	MW	NO.	MW	NO.	MW
AIR CORRECTION DIVISION, UOP								
LIME	2	822.	2	822.	0	0.	0	0.
LIMESTONE	5	2616.	3	1176.	0	0.	2	1440.
LIME/LIMESTONE	1	10.	1	10.	0	0.	0	0.
SODIUM CARBONATE	2	880.	2	880.	0	0.	0	0.
TOTAL -	10	4328.	8	2888.	0	0.	2	1440.
AMERICAN AIR FILTER								
LIME	6	1658.	5	1163.	1	495.	0	0.
LIMESTONE	1	280.	1	280.	0	0.	0	0.
TOTAL -	7	1938.	6	1443.	1	495.	0	0.
BABCOCK & WILCOX								
LIME	7	4211.	3	1986.	3	1575.	1	650.
LIMESTONE	8	2521.	6	2102.	2	419.	0	0.
LIME/SPRAY DRYING	2	1017.	0	0.	2	1017.	0	0.
TOTAL -	17	7749.	9	4088.	7	3011.	1	650.
COMBUSTION ENGINEERING								
LIME	6	1160.	6	1160.	0	0.	0	0.
LIMESTONE	11	5075.	6	2532.	3	1043.	2	1500.
LIMESTONE/ALKALINE FLYASH	2	1480.	2	1480.	0	0.	0	0.
LIME/ALKALINE FLYASH	2	654.	2	654.	0	0.	0	0.
TOTAL -	21	8369.	16	5826.	3	1043.	2	1500.
DAVY MCKEE								
WELLMAN LORD	8	2074.	7	1540.	1	534.	0	0.
TOTAL -	8	2074.	7	1540.	1	534.	0	0.
ENVIRONEERING, RILEY STOKER								
LIMESTONE	3	664.	3	664.	0	0.	0	0.
TOTAL -	3	664.	3	664.	0	0.	0	0.
FLAKT								
LIME/SODIUM CARBONATE	1	100.	0	0.	1	100.	0	0.
TOTAL -	1	100.	0	0.	1	100.	0	0.
FMC								
DUAL ALKALI	3	1107.	1	265.	1	421.	1	421.
TOTAL -	3	1107.	1	265.	1	421.	1	421.
GE ENVIRONMENTAL SERVICES								
DUAL ALKALI	1	617.	1	617.	0	0.	0	0.
LIME	8	4138.	7	3838.	1	300.	0	0.
LIMESTONE	8	5000.	1	800.	5	2700.	2	1500.
LIME/ALKALINE FLYASH	3	579.	3	579.	0	0.	0	0.
LIME/LIMESTONE	1	10.	1	10.	0	0.	0	0.
LIME/SPRAY DRYING	1	44.	0	0.	1	44.	0	0.
PROCESS NOT SELECTED	1	504.	0	0.	0	0.	1	504.
TOTAL -	23	10892.	13	5844.	7	3044.	3	2004.
JOY MFG/NIRO ATOMIZER								
LIME/SPRAY DRYING	7	2356.	1	110.	3	1227.	3	1019.
TOTAL -	7	2356.	1	110.	3	1227.	3	1019.
MITSUBISHI HEAVY INDUSTRIES								
LIMESTONE	2	882.	1	441.	1	441.	0	0.
TOTAL -	2	882.	1	441.	1	441.	0	0.

SECTION 5
SUMMARY OF FGD SYSTEMS BY SYSTEM SUPPLIER

SYSTEM SUPPLIER/PROCESS	TOTAL NO.	TOTAL MW	STATUS: OPERATIONAL NO.	OPERATIONAL MW	CONSTRUCTION NO.	CONSTRUCTION MW	CONTRACT AWARDED NO.	CONTRACT AWARDED MW
MORRISON & KNUDSEN/U.S.B.M.								
CITRATE	1	60.	1	60.	0	0.	0	0.
TOTAL -	1	60.	1	60.	0	0.	0	0.
M.W. KELLOGG								
LIME	1	917.	1	917.	0	0.	0	0.
LIMESTONE	6	2760.	2	560.	3	1760.	1	440.
TOTAL -	7	3677.	3	1477.	3	1760.	1	440.
PEABODY PROCESS SYSTEMS								
LIMESTONE	8	3418.	4	1178.	2	1120.	2	1120.
LIME/ALKALINE FLYASH	1	475.	1	475.	0	0.	0	0.
TOTAL -	9	3893.	5	1653.	2	1120.	2	1120.
RESEARCH-COTTRELL								
LIMESTONE	14	5261.	11	3815.	2	696.	1	750.
LIME/LIMESTONE	1	475.	0	0.	0	0.	1	475.
LIME/SPRAY DRYING	1	50.	0	0.	1	50.	0	0.
TOTAL -	16	5786.	11	3815.	3	746.	2	1225.
ROCKWELL INTERNATIONAL								
AQUEOUS CARBONATE/SPRAY DRYING	1	100.	0	0.	1	100.	0	0.
TOTAL -	1	100.	0	0.	1	100.	0	0.
TENNESSEE VALLEY AUTHORITY								
LIMESTONE	1	550.	1	550.	0	0.	0	0.
TOTAL -	1	550.	1	550.	0	0.	0	0.
THYSSEN/CEA								
DUAL ALKALI	1	299.	1	299.	0	0.	0	0.
LIME	1	500.	0	0.	1	500.	0	0.
LIME/ALKALINE FLYASH	5	2305.	3	905.	2	1400.	0	0.
SODIUM CARBONATE	3	375.	3	375.	0	0.	0	0.
TOTAL -	10	3479.	7	1579.	3	1900.	0	0.
UNITED ENGINEERS								
MAGNESIUM OXIDE	3	724.	0	0.	3	724.	0	0.
TOTAL -	3	724.	0	0.	3	724.	0	0.
WHEELABRATOR-FRYE/R.I.								
SODIUM CARBONATE/SPRAY DRYING	1	440.	1	440.	0	0.	0	0.
TOTAL -	1	440.	1	440.	0	0.	0	0.
TOTAL -	151	59168.	94	32683.	40	16666.	17	9819.

SECTION 6
SUMMARY OF FGD SYSTEMS BY PROCESS

	TOTAL		STATUS: OPERATIONAL		CONSTRUCTION		CONTRACT AWARDED		PLANNED	
PROCESS	NO.	MW	NO.	MW	NO.	MW	NO.	MW	NO.	MW
AQUEOUS CARBONATE/SPRAY DRYING	1	100.	0	0.	1	100.	0	0.	0	0.
CITRATE	1	60.	1	60.	0	0.	0	0.	0	0.
LIME	1	65.	0	0.	1	65.	0	0.	0	0.
LIMESTONE	1	166.	0	0.	1	166.	0	0.	0	0.
LIME/LIMESTONE	1	475.	0	0.	0	0.	1	475.	0	0.
MAGNESIUM OXIDE	3	724.	0	0.	3	724.	0	0.	0	0.
WELLMAN LORD	8	2074.	7	1540.	1	534.	0	0.	0	0.
SUBTOTAL - SALEABLE PRODUCT	16	3664.	8	1600.	7	1589.	1	475.	0	0.
DUAL ALKALI	5	2023.	3	1181.	1	421.	1	421.	0	0.
LIME	36	17631.	24	9886.	5	2805.	1	650.	6	4290.
LIMESTONE	78	36196.	39	14098.	17	8013.	10	6750.	12	7335.
LIMESTONE/ALKALINE FLYASH	2	1480.	2	1480.	0	0.	0	0.	0	0.
LIME/ALKALINE FLYASH	11	4013.	9	2613.	2	1400.	0	0.	0	0.
LIME/LIMESTONE	2	20.	2	20.	0	0.	0	0.	0	0.
LIME/SODIUM CARBONATE	1	100.	0	0.	1	100.	0	0.	0	0.
LIME/SPRAY DRYING	11	3467.	1	110.	7	2338.	3	1019.	0	0.
PROCESS NOT SELECTED	10	5315.	0	0.	0	0.	0	0.	10	5315.
SODIUM CARBONATE	9	3155.	5	1255.	0	0.	0	0.	4	1900.
SODIUM CARBONATE/SPRAY DRYING	1	440.	1	440.	0	0.	0	0.	0	0.
SUBTOTAL - THROWAWAY PRODUCT	166	73840.	86	31083.	33	15077.	15	8840.	32	18840.
TOTALS	182	77504.	94	32683.	40	16666.	16	9315.	32	18840.
SALEABLE PRODUCT PROCESS % OF TOTAL MW		5		5		10		5		0

NOTE: 40 UNITS ARE UNDECIDED AND ARE NOT INCLUDED IN THIS TABLE

SECTION 7
SUMMARY OF OPERATIONAL FGD SYSTEMS BY PROCESS AND UNIT

PROCESS/ UNIT NAME	UNIT NO.	CAPACITY MW	INITIAL STARTUP	COMMERCIAL STARTUP
CITRATE				
G.F. WEATON	1	60.	11/79	1/80
		60.		
DUAL ALKALI				
A.B. BROWN	1	265.	3/79	4/79
NEWTON	1	617.	9/79	12/79
CANE RUN	6	299.	4/79	0/ 0
		1181.		
LIME				
CONESVILLE	5	411.	1/77	2/77
CONESVILLE	6	411.	6/78	7/73
CANE RUN	4	188.	8/76	8/77
GREEN	1	242.	12/79	12/79
GREEN	2	242.	11/80	12/80
GREEN RIVER	1-3	64.	9/75	6/76
MILL CREEK	3	427.	8/78	3/79
EAST BEND	2	650.	3/81	3/81
PLEASANTS	1	668.	3/79	3/79
PLEASANTS	2	668.	10/80	12/80
CANE RUN	5	200.	12/77	7/78
HAWTHORN	3	90.	11/72	0/ 0
HAWTHORN	4	90.	8/72	0/ 0
MILL CREEK	1	358.	12/80	4/81
MILL CREEK	2	350.	12/81	4/82
PADDY'S RUN	6	72.	4/73	0/ 0
BRUCE MANSFIELD	1	917.	12/75	6/76
BRUCE MANSFIELD	2	917.	7/77	10/77
ELRAMA	1-4	510.	10/75	10/75
HUNTER	1	360.	5/79	5/79
HUNTER	2	360.	6/80	6/80
HUNTINGTON	1	366.	5/78	5/78
PHILLIPS	1-6	408.	7/73	6/74
BRUCE MANSFIELD	3	917.	6/80	6/80
		9886.		
LIMESTONE				
PETERSBURG	3	532.	12/77	12/77
POWERTON	51	450.	4/80	6/81
SOUTHWEST	1	194.	4/77	9/77
WINYAH	4	280.	7/81	0/ 0
LA CYGNE	1	874.	2/73	6/73
MARION	4	173.	5/79	6/79
SAN MIGUEL	1	400.	8/81	0/ 0
SIKESTON	1	235.	6/81	9/81
WINYAH	2	140.	7/77	0/ 0
WINYAH	3	280.	5/80	6/80
JEFFREY	1	540.	8/78	0/ 0
JEFFREY	2	490.	1/80	5/80
LAWRENCE	4	125.	1/77	0/ 0
LAWRENCE	5	420.	4/78	0/ 0
SANDOW	4	382.	12/80	1/81
WIDOWS CREEK	7	575.	3/81	9/81
DUCK CREEK	1	416.	7/76	8/78
R.D. MORROW, SR.	1	124.	8/78	8/78
R.D. MORROW, SR.	2	124.	6/79	6/79
MONTICELLO	3	800.	5/78	10/78

THIS TABLE IDENTIFIES UNITS IN ALPHABETICAL ORDER.
RESPECTIVE COMPANIES CAN BE FOUND IN SECTION 1.

SECTION 7
SUMMARY OF OPERATIONAL FGD SYSTEMS BY PROCESS AND UNIT

PROCESS/ UNIT NAME	UNIT NO.	CAPACITY MW	INITIAL STARTUP	COMMERCIAL STARTUP
MEROM	2	441.	12/81	2/82
CORONADO	1	280.	11/79	12/79
CORONADO	2	280.	7/80	10/81
CRAIG	1	410.	10/80	0/ 0
CRAIG	2	410.	12/79	5/80
TOMBIGBEE	2	179.	9/78	9/78
TOMBIGBEE	3	179.	6/79	6/79
APACHE	2	98.	8/78	1/79
APACHE	3	98.	6/79	4/79
CHOLLA	1	119.	10/73	12/73
CHOLLA	2	264.	4/78	6/78
CHOLLA	4	126.	3/81	6/81
DALLMAN	3	185.	12/80	0/81
LARAMIE RIVER	1	570.	7/80	7/80
LARAMIE RIVER	2	570.	7/81	6/81
MARTIN LAKE	1	595.	4/77	10/78
MARTIN LAKE	2	595.	5/78	0/ 0
MARTIN LAKE	3	595.	2/79	0/ 0
WIDOWS CREEK	8	550.	5/77	1/78
		14098.		
LIMESTONE/ALKALINE FLYASH				
SHERBURNE	1	740.	3/76	5/76
SHERBURNE	2	740.	3/77	4/77
		1480.		
LIME/ALKALINE FLYASH				
COAL CREEK	1	327.	7/79	8/79
COAL CREEK	2	327.	7/80	9/80
FOUR CORNERS	1	175.	11/79	0/ 0
FOUR CORNERS	2	175.	11/79	0/ 0
FOUR CORNERS	3	229.	11/79	0/ 0
CLAY BOSWELL	4	475.	4/80	0/ 0
COLSTRIP	1	360.	9/75	11/75
COLSTRIP	2	360.	5/76	10/76
MILTON R. YOUNG	2	185.	9/77	6/78
		2613.		
LIME/LIMESTONE				
SHAWNEE	10A	10.	4/72	0/ 0
SHAWNEE	10B	10.	4/72	0/ 0
		20.		
LIME/SPRAY DRYING				
RIVERSIDE	6-7	110.	11/80	12/80
		110.		
SODIUM CARBONATE				
JIM BRIDGER	4	550.	9/79	2/80
NAUGHTON	3	330.	9/81	12/81
REID GARDNER	1	125.	3/74	4/74
REID GARDNER	2	125.	4/74	0/ 0
REID GARDNER	3	125.	6/76	7/76
		1255.		

THIS TABLE IDENTIFIES UNITS IN ALPHABETICAL ORDER.
RESPECTIVE COMPANIES CAN BE FOUND IN SECTION 1.

SECTION 7
SUMMARY OF OPERATIONAL FGD SYSTEMS BY PROCESS AND UNIT

PROCESS/ UNIT NAME	UNIT NO.	CAPACITY MW	INITIAL STARTUP	COMMERCIAL STARTUP
SODIUM CARBONATE/SPRAY DRYING				
COYOTE	1	440.	4/81	5/81
		440.		
WELLMAN LORD				
DEAN H. MITCHELL	11	115.	7/76	6/77
DELAWARE CITY	1	60.	5/80	5/80
DELAWARE CITY	2	60.	5/80	5/80
DELAWARE CITY	3	60.	5/80	5/80
SAN JUAN	1	361.	4/78	4/78
SAN JUAN	2	350.	8/78	8/78
SAN JUAN	3	534.	12/79	0/ 0
		1540.		
TOTAL		32683.		

SECTION 8
SUMMARY OF END-PRODUCT DISPOSAL PRACTICES FOR OPERATIONAL FGD SYSTEMS

PROCESS/ UNIT NAME	UNIT NO	THROWAWAY STABILIZED	THROWAWAY UNSTABILIZED	BYPRODUCT TYPE	BYPRODUCT DISPOSITION
CITRATE					
G.F. WEATON	1			ELEMENTAL SULFUR	
DUAL ALKALI					
A.B. BROWN	1	LANDFILL			
NEWTON	1	LANDFILL			
CANE RUN	6	LANDFILL			
LIME					
CONESVILLE	5	LANDFILL			
CONESVILLE	6	LANDFILL			
CANE RUN	4	LANDFILL			
GREEN	1	LANDFILL			
GREEN	2	LANDFILL			
GREEN RIVER	1-3	POND			
MILL CREEK	3	POND		NONE	
EAST BEND	2	LANDFILL			
PLEASANTS	1	POND		NONE	
PLEASANTS	2	POND		NONE	
CANE RUN	5	LANDFILL			
HAWTHORN	3	POND			
HAWTHORN	4	POND			
MILL CREEK	1	LANDFILL		NONE	
MILL CREEK	2	LANDFILL		NONE	
PADDY'S RUN	6	POND			
BRUCE MANSFIELD	1	POND			
BRUCE MANSFIELD	2	POND			
ELPAMA	1-4	LANDFILL			
HUNTER	1	LANDFILL			
HUNTER	2	LANDFILL			
HUNTINGTON	1	LANDFILL			
PHILLIPS	1-6	LANDFILL			
BRUCE MANSFIELD	3	LANDFILL			
LIMESTONE					
PETERSBURG	3	LANDFILL			
POWERTON	51	POND			
SOUTHWEST	1	LANDFILL			
WINYAH	4				
LA CYGNE	1	POND			
MARION	4	LANDFILL			
SAN MIGUEL	1	LANDFILL			
SIKESTON	1	POND			
WINYAH	2	POND			
WINYAH	3	POND			
JEFFREY	1	POND			
JEFFREY	2	POND			
LAWRENCE	4	POND			
LAWRENCE	5	POND			
SANDOW	4	POND			
WIDOWS CREEK	7	POND			
DUCK CREEK	1	POND			
R.D. MORROW, SR.	1	LANDFILL			
R.D. MORROW, SR.	2	LANDFILL			
MONTICELLO	3	LANDFILL			
MEROM	2	LANDFILL			
CORONADO	1	POND			
CORONADO	2	POND			
CRAIG	1	POND			
CRAIG	2	POND			
TOMBIGBEE	2	POND			
TOMBIGBEE	3	POND			

SECTION 8
SUMMARY OF END-PRODUCT DISPOSAL PRACTICES FOR OPERATIONAL FGD SYSTEMS

PROCESS/ UNIT NAME	UNIT NO	THROWAWAY STABILIZED	THROWAWAY UNSTABILIZED	BYPRODUCT TYPE	BYPRODUCT DISPOSITION
APACHE	2	POND			
APACHE	3	POND			
CHOLLA	1	POND			
CHOLLA	2	POND			
CHOLLA	4	POND			
DALLMAN	3	LANDFILL		NONE	
LARAMIE RIVER	1	LANDFILL			
LARAMIE RIVER	2	LANDFILL			LANDFILL
MARTIN LAKE	1	LANDFILL			
MARTIN LAKE	2	LANDFILL			
MARTIN LAKE	3	LANDFILL			
WIDOWS CREEK	8	POND			
LIMESTONE/ALKALINE FLYASH					
SHERBURNE	1	POND			
SHERBURNE	2	POND			
LIME/ALKALINE FLYASH					
COAL CREEK	1	POND			
COAL CREEK	2	POND			
FOUR CORNERS	1				
FOUR CORNERS	2				
FOUR CORNERS	3				
CLAY BOSWELL	4	POND			
COLSTRIP	1	POND			
COLSTRIP	2	POND			
MILTON R. YOUNG	2	LANDFILL			
LIME/LIMESTONE					
SHAWNEE	10A	LANDFILL			
SHAWNEE	10B	LANDFILL			
LIME/SPRAY DRYING					
RIVERSIDE	6-7	LANDFILL			
SODIUM CARBONATE					
JIM BRIDGER	4	POND			
NAUGHTON	3				
REID GARDNER	1	POND			
REID GARDNER	2	POND			
REID GARDNER	3	POND			
SODIUM CARBONATE/SPRAY DRYING					
COYOTE	1	LANDFILL			
WELLMAN LORD					
DEAN H. MITCHELL	11			ELEMENTAL SULFUR	
DELAWARE CITY	1	POND		SULFURIC ACID	MARKETED
DELAWARE CITY	2	POND		SULFURIC ACID	MARKETED
DELAWARE CITY	3	POND		SULFURIC ACID	MARKETED
SAN JUAN	1			ELEMENTAL SULFUR	MARKETED
SAN JUAN	2			ELEMENTAL SULFUR	MARKETED
SAN JUAN	3			SULFURIC ACID	MARKETED

SECTION 9
SUMMARY OF FGD SYSTEMS IN OPERATION

COMPANY NAME/ UNIT NAME	UNIT NO.	NEW OR RETROFIT	CAPACITY MW	PROCESS/ SYSTEM SUPPLIER	START-UP DATE
ALABAMA ELECTRIC TOMBIGBEE	2	NEW	179.	LIMESTONE PEABODY PROCESS SYSTEMS	9/78
ALABAMA ELECTRIC TOMBIGBEE	3	NEW	179.	LIMESTONE PEABODY PROCESS SYSTEMS	6/79
ARIZONA ELECTRIC POWER APACHE	2	NEW	98.	LIMESTONE RESEARCH-COTTRELL	8/78
ARIZONA ELECTRIC POWER APACHE	3	NEW	98.	LIMESTONE RESEARCH-COTTRELL	6/79
ARIZONA PUBLIC SERVICE CHOLLA	1	RETROFIT	119.	LIMESTONE RESEARCH-COTTRELL	10/73
ARIZONA PUBLIC SERVICE CHOLLA	2	NEW	264.	LIMESTONE RESEARCH-COTTRELL	4/78
ARIZONA PUBLIC SERVICE CHOLLA	4	NEW	126.	LIMESTONE RESEARCH-COTTRELL	3/81
ARIZONA PUBLIC SERVICE FOUR CORNERS	1	RETROFIT	175.	LIME/ALKALINE FLYASH GE ENVIRONMENTAL SERVICES	11/79
ARIZONA PUBLIC SERVICE FOUR CORNERS	2	RETROFIT	175.	LIME/ALKALINE FLYASH GE ENVIRONMENTAL SERVICES	11/79
ARIZONA PUBLIC SERVICE FOUR CORNERS	3	RETROFIT	229.	LIME/ALKALINE FLYASH GE ENVIRONMENTAL SERVICES	11/79
BASIN ELECTRIC POWER LARAMIE RIVER	1	NEW	570.	LIMESTONE RESEARCH-COTTRELL	7/80
BASIN ELECTRIC POWER LARAMIE RIVER	2	NEW	570.	LIMESTONE RESEARCH-COTTRELL	7/81
BIG RIVERS ELECTRIC GREEN	1	NEW	242.	LIME AMERICAN AIR FILTER	12/79
BIG RIVERS ELECTRIC GREEN	2	NEW	242.	LIME AMERICAN AIR FILTER	11/80
CENTRAL ILLINOIS LIGHT DUCK CREEK	1	NEW	416.	LIMESTONE ENVIRONEERING, RILEY STOKER	7/76
CENTRAL ILLINOIS PUBLIC SERV NEWTON	1	NEW	617.	DUAL ALKALI GE ENVIRONMENTAL SERVICES	9/79
CINCINNATI GAS & ELECTRIC EAST BEND	2	NEW	650.	LIME BABCOCK & WILCOX	3/81
COLORADO UTE ELECTRIC CRAIG	1	NEW	410.	LIMESTONE PEABODY PROCESS SYSTEMS	10/80
COLORADO UTE ELECTRIC CRAIG	2	NEW	410.	LIMESTONE PEABODY PROCESS SYSTEMS	12/79
COLUMBUS & SOUTHERN OHIO ELEC CONESVILLE	5	NEW	411.	LIME AIR CORRECTION DIVISION, UOP	1/77
COLUMBUS & SOUTHERN OHIO ELEC CONESVILLE	6	NEW	411.	LIME AIR CORRECTION DIVISION, UOP	6/78
COMMONWEALTH EDISON POWERTON	51	RETROFIT	450.	LIMESTONE AIR CORRECTION DIVISION, UOP	4/80
COOPERATIVE POWER ASSOCIATION COAL CREEK	1	NEW	327.	LIME/ALKALINE FLYASH COMBUSTION ENGINEERING	7/79

SECTION 9
SUMMARY OF FGD SYSTEMS IN OPERATION

COMPANY NAME/ UNIT NAME	UNIT NO.	NEW OR RETROFIT	CAPACITY MW	PROCESS/ SYSTEM SUPPLIER	START-UP DATE
COOPERATIVE POWER ASSOCIATION COAL CREEK	2	NEW	327.	LIME/ALKALINE FLYASH COMBUSTION ENGINEERING	7/80
DELMARVA POWER & LIGHT DELAWARE CITY	1	RETROFIT	60.	WELLMAN LORD DAVY MCKEE	5/80
DELMARVA POWER & LIGHT DELAWARE CITY	2	RETROFIT	60.	WELLMAN LORD DAVY MCKEE	5/80
DELMARVA POWER & LIGHT DELAWARE CITY	3	RETROFIT	60.	WELLMAN LORD DAVY MCKEE	5/80
DUQUESNE LIGHT ELRAMA	1-4	RETROFIT	510.	LIME GE ENVIRONMENTAL SERVICES	10/75
DUQUESNE LIGHT PHILLIPS	1-6	RETROFIT	408.	LIME GE ENVIRONMENTAL SERVICES	7/73
HOOSIER ENERGY MEROM	2	NEW	441.	LIMESTONE MITSUBISHI HEAVY INDUSTRIES	12/81
INDIANAPOLIS POWER & LIGHT PETERSBURG	3	NEW	532.	LIMESTONE AIR CORRECTION DIVISION, UOP	12/77
KANSAS CITY POWER & LIGHT HAWTHORN	3	RETROFIT	90.	LIME COMBUSTION ENGINEERING	11/72
KANSAS CITY POWER & LIGHT HAWTHORN	4	RETROFIT	90.	LIME COMBUSTION ENGINEERING	8/72
KANSAS CITY POWER & LIGHT LA CYGNE	1	NEW	874.	LIMESTONE BABCOCK & WILCOX	2/73
KANSAS POWER & LIGHT JEFFREY	1	NEW	540.	LIMESTONE COMBUSTION ENGINEERING	8/78
KANSAS POWER & LIGHT JEFFREY	2	NEW	490.	LIMESTONE COMBUSTION ENGINEERING	1/80
KANSAS POWER & LIGHT LAWRENCE	4	RETROFIT	125.	LIMESTONE COMBUSTION ENGINEERING	1/77
KANSAS POWER & LIGHT LAWRENCE	5	RETROFIT	420.	LIMESTONE COMBUSTION ENGINEERING	4/78
KENTUCKY UTILITIES GREEN RIVER	1-3	RETROFIT	64.	LIME AMERICAN AIR FILTER	9/75
LOUISVILLE GAS & ELECTRIC CANE RUN	4	RETROFIT	188.	LIME AMERICAN AIR FILTER	8/76
LOUISVILLE GAS & ELECTRIC CANE RUN	5	RETROFIT	200.	LIME COMBUSTION ENGINEERING	12/77
LOUISVILLE GAS & ELECTRIC CANE RUN	6	RETROFIT	299.	DUAL ALKALI THYSSEN/CEA	4/79
LOUISVILLE GAS & ELECTRIC MILL CREEK	1	RETROFIT	358.	LIME COMBUSTION ENGINEERING	12/80
LOUISVILLE GAS & ELECTRIC MILL CREEK	2	RETROFIT	350.	LIME COMBUSTION ENGINEERING	12/81
LOUISVILLE GAS & ELECTRIC MILL CREEK	3	NEW	427.	LIME AMERICAN AIR FILTER	8/78
LOUISVILLE GAS & ELECTRIC PADDY'S RUN	6	RETROFIT	72.	LIME COMBUSTION ENGINEERING	4/73

SECTION 9
SUMMARY OF FGD SYSTEMS IN OPERATION

COMPANY NAME/ UNIT NAME	UNIT NO.	NEW OR RETROFIT	CAPACITY MW	PROCESS/ SYSTEM SUPPLIER	START-UP DATE
MINNESOTA POWER & LIGHT CLAY BOSWELL	4	NEW	475.	LIME/ALKALINE FLYASH PEABODY PROCESS SYSTEMS	4/80
MINNKOTA POWER MILTON R. YOUNG	2	NEW	185.	LIME/ALKALINE FLYASH THYSSEN/CEA	9/77
MONONGAHELA POWER PLEASANTS	1	NEW	668.	LIME BABCOCK & WILCOX	3/79
MONONGAHELA POWER PLEASANTS	2	NEW	668.	LIME BABCOCK & WILCOX	10/80
MONTANA POWER COLSTRIP	1	NEW	360.	LIME/ALKALINE FLYASH THYSSEN/CEA	9/75
MONTANA POWER COLSTRIP	2	NEW	360.	LIME/ALKALINE FLYASH THYSSEN/CEA	5/76
MONTANA-DAKOTA UTILITIES COYOTE	1	NEW	440.	SODIUM CARBONATE/SPRAY DRYING WHEELABRATOR-FRYE/R.I.	4/81
NEVADA POWER REID GARDNER	1	RETROFIT	125.	SODIUM CARBONATE THYSSEN/CEA	3/74
NEVADA POWER REID GARDNER	2	RETROFIT	125.	SODIUM CARBONATE THYSSEN/CEA	4/74
NEVADA POWER REID GARDNER	3	NEW	125.	SODIUM CARBONATE THYSSEN/CEA	6/76
NORTHERN INDIANA PUB SERVICE DEAN H. MITCHELL	11	RETROFIT	115.	WELLMAN LORD DAVY MCKEE	7/76
NORTHERN STATES POWER RIVERSIDE	6-7	RETROFIT	110.	LIME/SPRAY DRYING JOY MFG/NIRO ATOMIZER	11/80
NORTHERN STATES POWER SHERBURNE	1	NEW	740.	LIMESTONE/ALKALINE FLYASH COMBUSTION ENGINEERING	3/76
NORTHERN STATES POWER SHERBURNE	2	NEW	740.	LIMESTONE/ALKALINE FLYASH COMBUSTION ENGINEERING	3/77
PACIFIC POWER & LIGHT JIM BRIDGER	4	NEW	550.	SODIUM CARBONATE AIR CORRECTION DIVISION, UOP	9/79
PENNSYLVANIA POWER BRUCE MANSFIELD	1	NEW	917.	LIME GE ENVIRONMENTAL SERVICES	12/75
PENNSYLVANIA POWER BRUCE MANSFIELD	2	NEW	917.	LIME GE ENVIRONMENTAL SERVICES	7/77
PENNSYLVANIA POWER BRUCE MANSFIELD	3	NEW	917.	LIME M.W. KELLOGG	6/80
PUBLIC SERVICE OF NEW MEXICO SAN JUAN	1	RETROFIT	361.	WELLMAN LORD DAVY MCKEE	4/78
PUBLIC SERVICE OF NEW MEXICO SAN JUAN	2	RETROFIT	350.	WELLMAN LORD DAVY MCKEE	8/78
PUBLIC SERVICE OF NEW MEXICO SAN JUAN	3	NEW	534.	WELLMAN LORD DAVY MCKEE	12/79
SALT RIVER PROJECT CORONADO	1	NEW	280.	LIMESTONE M.W. KELLOGG	11/79
SALT RIVER PROJECT CORONADO	2	NEW	280.	LIMESTONE M.W. KELLOGG	7/80

SECTION 9
SUMMARY OF FGD SYSTEMS IN OPERATION

COMPANY NAME/ UNIT NAME	UNIT NO.	NEW OR RETROFIT	CAPACITY MW	PROCESS/ SYSTEM SUPPLIER	START-UP DATE
SAN MIGUEL ELECTRIC SAN MIGUEL	1	NEW	400.	LIMESTONE BABCOCK & WILCOX	8/81
SIKESTON BPD OF MUNICIPAL UTIL SIKESTON	1	NEW	235.	LIMESTONE BABCOCK & WILCOX	6/81
SOUTH CAROLINA PUBLIC SERVICE WINYAH	2	NEW	140.	LIMESTONE BABCOCK & WILCOX	7/77
SOUTH CAROLINA PUBLIC SERVICE WINYAH	3	NEW	280.	LIMESTONE BABCOCK & WILCOX	5/80
SOUTH CAROLINA PUBLIC SERVICE WINYAH	4	NEW	280.	LIMESTONE AMERICAN AIR FILTER	7/81
SOUTH MISSISSIPPI ELEC PWR R.D. MORROW, SR.	1	NEW	124.	LIMESTONE ENVIRONEERING, RILEY STOKER	8/78
SOUTH MISSISSIPPI ELEC PWR R.D. MORROW, SR.	2	NEW	124.	LIMESTONE ENVIRONEERING, RILEY STOKER	6/79
SOUTHERN ILLINOIS POWER MARION	4	NEW	173.	LIMESTONE BABCOCK & WILCOX	5/79
SOUTHERN INDIANA GAS & ELEC A.B. BROWN	1	NEW	265.	DUAL ALKALI FMC	3/79
SPRINGFIELD CITY UTILITIES SOUTHWEST	1	NEW	194.	LIMESTONE AIR CORRECTION DIVISION, UOP	4/77
SPRINGFIELD WATER, LIGHT & PWR DALLMAN	3	NEW	185.	LIMESTONE RESEARCH-COTTRELL	12/80
ST. JOE ZINC G.F. WEATON	1	RETROFIT	60.	CITRATE MORRISON & KNUDSEN/U.S.B.M.	11/79
TENNESSEE VALLEY AUTHORITY SHAWNEE	10A	RETROFIT	10.	LIME/LIMESTONE AIR CORRECTION DIVISION, UOP	4/72
TENNESSEE VALLEY AUTHORITY SHAWNEE	10B	RETROFIT	10.	LIME/LIMESTONE GE ENVIRONMENTAL SERVICES	4/72
TENNESSEE VALLEY AUTHORITY WIDOWS CREEK	7	RETROFIT	575.	LIMESTONE COMBUSTION ENGINEERING	3/81
TENNESSEE VALLEY AUTHORITY WIDOWS CREEK	8	RETROFIT	550.	LIMESTONE TENNESSEE VALLEY AUTHORITY	5/77
TEXAS POWER & LIGHT SANDOW	4	NEW	382.	LIMESTONE COMBUSTION ENGINEERING	12/80
TEXAS UTILITIES MARTIN LAKE	1	NEW	595.	LIMESTONE RESEARCH-COTTRELL	4/77
TEXAS UTILITIES MARTIN LAKE	2	NEW	595.	LIMESTONE RESEARCH-COTTRELL	5/78
TEXAS UTILITIES MARTIN LAKE	3	NEW	595.	LIMESTONE RESEARCH-COTTRELL	2/79
TEXAS UTILITIES MONTICELLO	3	NEW	800.	LIMESTONE GE ENVIRONMENTAL SERVICES	5/78
UTAH POWER & LIGHT HUNTER	1	NEW	360.	LIME GE ENVIRONMENTAL SERVICES	5/79
UTAH POWER & LIGHT HUNTER	2	NEW	360.	LIME GE ENVIRONMENTAL SERVICES	6/80

SECTION 9
SUMMARY OF FGD SYSTEMS IN OPERATION

COMPANY NAME/ UNIT NAME	UNIT NO.	NEW OR RETROFIT	CAPACITY MW	PROCESS/ SYSTEM SUPPLIER	START-UP DATE
UTAH POWER & LIGHT HUNTINGTON	1	NEW	366.	LIME GE ENVIRONMENTAL SERVICES	5/78
UTAH POWER & LIGHT NAUGHTON	3	RETROFIT	330.	SODIUM CARBONATE AIR CORRECTION DIVISION, UOP	9/81
TOTAL			32683.		

SECTION 10
SUMMARY OF FGD SYSTEMS UNDER CONSTRUCTION

COMPANY NAME/ UNIT NAME	UNIT NO.	NEW OR RETROFIT	CAPACITY MW	PROCESS/ SYSTEM SUPPLIER	START-UP DATE
ARIZONA PUBLIC SERVICE FOUR CORNERS	4	RETROFIT	755.	LIME BABCOCK & WILCOX	12/84
ARIZONA PUBLIC SERVICE FOUR CORNERS	5	RETROFIT	755.	LIME BABCOCK & WILCOX	12/84
ASSOCIATED ELECTRIC THOMAS HILL	3	NEW	670.	LIMESTONE M.W. KELLOGG	1/82
BASIN ELECTRIC POWER ANTELOPE VALLEY	1	NEW	440.	LIME/SPRAY DRYING JOY MFG/NIRO ATOMIZER	10/83
BASIN ELECTRIC POWER ANTELOPE VALLEY	2	NEW	440.	LIME/SPRAY DRYING JOY MFG/NIRO ATOMIZER	10/85
BASIN ELECTRIC POWER LARAMIE RIVER	3	NEW	570.	LIME/SPRAY DRYING BABCOCK & WILCOX	11/82
BIG RIVERS ELECTRIC D.B. WILSON	1	NEW	440.	LIMESTONE M.W. KELLOGG	7/84
COLORADO UTE ELECTRIC CRAIG	3	NEW	447.	LIME/SPRAY DRYING BABCOCK & WILCOX	4/83
DESERET GEN & TRANS BONANZA	1	NEW	410.	LIMESTONE COMBUSTION ENGINEERING	9/84
EAST KENTUCKY POWER SPURLOCK	2	NEW	500.	LIME THYSSEN/CEA	1/83
GRAND HAVEN BRD OF LIGHT & PWR J.B. SIMS	3	NEW	65.	LIME BABCOCK & WILCOX	1/83
HOOSIER ENERGY MEROM	1	NEW	441.	LIMESTONE MITSUBISHI HEAVY INDUSTRIES	5/82
HOUSTON LIGHTING & POWER W.A. PARISH	8	NEW	492.	LIMESTONE GE ENVIRONMENTAL SERVICES	11/82
INDIANAPOLIS POWER & LIGHT PETERSBURG	4	NEW	530.	LIMESTONE RESEARCH-COTTRELL	10/84
LAKELAND UTILITIES MCINTOSH	3	NEW	364.	LIMESTONE BABCOCK & WILCOX	1/82
LOUISVILLE GAS & ELECTRIC MILL CREEK	4	NEW	495.	LIME AMERICAN AIR FILTER	6/82
MARQUETTE BOARD OF LIGHT & PWR SHIRAS	3	NEW	44.	LIME/SPRAY DRYING GE ENVIRONMENTAL SERVICES	9/82
MICHIGAN SO CENTRAL PWR AGENCY PROJECT	1	NEW	55.	LIMESTONE BABCOCK & WILCOX	6/82
MONTANA POWER COLSTRIP	3	NEW	700.	LIME/ALKALINE FLYASH THYSSEN/CEA	10/83
MONTANA POWER COLSTRIP	4	NEW	700.	LIME/ALKALINE FLYASH THYSSEN/CEA	0/84
MUSCATINE POWER & WATER MUSCATINE	9	NEW	166.	LIMESTONE RESEARCH-COTTRELL	9/82
NIAGARA MOHAWK POWER CHARLES R. HUNTLEY	66	RETROFIT	100.	AQUEOUS CARBONATE/SPRAY DRYING ROCKWELL INTERNATIONAL	4/82
NORTHERN INDIANA PUB SERVICE SCHAHFER	17	NEW	421.	DUAL ALKALI FMC	6/83

SECTION 10
SUMMARY OF FGD SYSTEMS UNDER CONSTRUCTION

COMPANY NAME/ UNIT NAME	UNIT NO.	NEW OR RETROFIT	CAPACITY MW	PROCESS/ SYSTEM SUPPLIER	START-UP DATE
PACIFIC POWER & LIGHT JIM BRIDGER	2A	RETROFIT	100.	LIME/SODIUM CARBONATE FLAKT	1/82
PHILADELPHIA ELECTRIC CROMBY	1	RETROFIT	150.	MAGNESIUM OXIDE UNITED ENGINEERS	5/83
PHILADELPHIA ELECTRIC EDDYSTONE	1	RETROFIT	240.	MAGNESIUM OXIDE UNITED ENGINEERS	12/82
PHILADELPHIA ELECTRIC EDDYSTONE	2	RETROFIT	334.	MAGNESIUM OXIDE UNITED ENGINEERS	12/82
PLAINS ELECTRIC G & T PLAINS ESCALANTE	1	NEW	233.	LIMESTONE COMBUSTION ENGINEERING	12/83
PUBLIC SERVICE INDIANA GIBSON	5	NEW	650.	LIMESTONE M.W. KELLOGG	8/82
PUBLIC SERVICE OF NEW MEXICO SAN JUAN	4	NEW	534.	WELLMAN LORD DAVY MCKEE	6/82
SEMINOLE ELECTRIC SEMINOLE	1	NEW	620.	LIMESTONE PEABODY PROCESS SYSTEMS	3/83
SOUTH CAROLINA PUBLIC SERVICE CROSS	2	NEW	500.	LIMESTONE PEABODY PROCESS SYSTEMS	11/83
SUNFLOWER ELECTRIC HOLCOMB	1	NEW	347.	LIME/SPRAY DRYING JOY MFG/NIRO ATOMIZER	9/83
TENNESSEE VALLEY AUTHORITY PARADISE	1	RETROFIT	704.	LIMESTONE GE ENVIRONMENTAL SERVICES	0/83
TENNESSEE VALLEY AUTHORITY PARADISE	2	RETROFIT	704.	LIMESTONE GE ENVIRONMENTAL SERVICES	0/83
TEXAS MUNICIPAL POWER AGENCY GIBBONS CREEK	1	NEW	400.	LIMESTONE COMBUSTION ENGINEERING	10/82
UNITED POWER ASSOCIATION STANTON	1A	NEW	50.	LIME/SPRAY DRYING RESEARCH-COTTRELL	6/82
UTAH POWER & LIGHT HUNTER	3	NEW	400.	LIMESTONE GE ENVIRONMENTAL SERVICES	6/83
UTAH POWER & LIGHT HUNTER	4	NEW	400.	LIMESTONE GE ENVIRONMENTAL SERVICES	6/85
WEST PENN POWER MITCHELL	33	RETROFIT	300.	LIME GE ENVIRONMENTAL SERVICES	8/82
TOTAL			16666.		

SECTION 11
SUMMARY OF CONTRACT AWARDED FGD SYSTEMS

COMPANY NAME/ UNIT NAME	UNIT NO.	NEW OR RETROFIT	CAPACITY MW	PROCESS/ SYSTEM SUPPLIER	START-UP DATE
BIG RIVERS ELECTRIC D.B. WILSON	2	NEW	440.	LIMESTONE M.W. KELLOGG	0/ 0
EAST KENTUCKY POWER J.K. SMITH	1	NEW	650.	LIME BABCOCK & WILCOX	8/87
HOUSTON LIGHTING & POWER LIMESTONE	1	NEW	750.	LIMESTONE COMBUSTION ENGINEERING	12/86
HOUSTON LIGHTING & POWER LIMESTONE	2	NEW	750.	LIMESTONE COMBUSTION ENGINEERING	12/87
NORTHERN INDIANA PUB SERVICE SCHAHFER	18	NEW	421.	DUAL ALKALI FMC	6/85
PLATTE RIVER POWER AUTHORITY RAWHIDE	1	NEW	279.	LIME/SPRAY DRYING JOY MFG/NIRO ATOMIZER	12/83
SEMINOLE ELECTRIC SEMINOLE	2	NEW	620.	LIMESTONE PEABODY PROCESS SYSTEMS	1/85
SOUTH CAROLINA PUBLIC SERVICE CROSS	1	NEW	500.	LIMESTONE PEABODY PROCESS SYSTEMS	5/88
SOUTHWESTERN ELECTRIC POWER DOLET HILLS	1	NEW	720.	LIMESTONE AIR CORRECTION DIVISION, UOP	3/86
SOUTHWESTERN ELECTRIC POWER HENRY W. PIRKEY	1	NEW	720.	LIMESTONE AIR CORRECTION DIVISION, UOP	12/84
TAMPA ELECTRIC BIG BEND	4	NEW	475.	LIME/LIMESTONE RESEARCH-COTTRELL	3/85
TEXAS POWER & LIGHT TWIN OAKS	1	NEW	750.	LIMESTONE GE ENVIRONMENTAL SERVICES	8/85
TEXAS POWER & LIGHT TWIN OAKS	2	NEW	750.	LIMESTONE GE ENVIRONMENTAL SERVICES	8/87
TEXAS UTILITIES MARTIN LAKE	4	NEW	750.	LIMESTONE RESEARCH-COTTRELL	0/89
TUCSON ELECTRIC POWER SPRINGERVILLE	1	NEW	370.	LIME/SPRAY DRYING JOY MFG/NIRO ATOMIZER	2/85
TUCSON ELECTRIC POWER SPRINGERVILLE	2	NEW	370.	LIME/SPRAY DRYING JOY MFG/NIRO ATOMIZER	3/87
WEST TEXAS UTILITIES OKLAUNION	1	NEW	504.	PROCESS NOT SELECTED GE ENVIRONMENTAL SERVICES	12/86
TOTAL			9819.		

SECTION 12
SUMMARY OF PLANNED FGD SYSTEMS

COMPANY NAME/ UNIT NAME	UNIT NO.	NEW OR RETROFIT	CAPACITY MW	PROCESS/ SYSTEM SUPPLIER	START-UP DATE
LETTER OF INTENT SIGNED					
IOWA ELECTRIC LIGHT & PWR GUTHRIE CO.	1	NEW	720.	LIMESTONE COMBUSTION ENGINEERING	11/87
KENTUCKY UTILITIES HANCOCK	1	NEW	650.	LIMESTONE BABCOCK & WILCOX	4/89
MIDDLE SOUTH UTILITIES ARKANSAS LIGNITE	5	NEW	890.	LIMESTONE COMBUSTION ENGINEERING	0/90
MIDDLE SOUTH UTILITIES ARKANSAS LIGNITE	6	NEW	890.	LIMESTONE COMBUSTION ENGINEERING	0/92
MIDDLE SOUTH UTILITIES UNASSIGNED	1	NEW	890.	LIMESTONE COMBUSTION ENGINEERING	0/89
MIDDLE SOUTH UTILITIES UNASSIGNED	2	NEW	890.	LIMESTONE COMBUSTION ENGINEERING	0/93
MIDDLE SOUTH UTILITIES WILTON	1	NEW	890.	LIMESTONE COMBUSTION ENGINEERING	0/88
MIDDLE SOUTH UTILITIES WILTON	2	NEW	890.	LIMESTONE COMBUSTION ENGINEERING	0/91
NEVADA POWER REID GARDNER	4	NEW	250.	SODIUM CARBONATE THYSSEN/CEA	4/83
NEW YORK STATE ELEC & GAS SOMERSET	1	NEW	625.	LIMESTONE PEABODY PROCESS SYSTEMS	6/84
TOTAL			7585.		
REQUESTING/EVALUATING BIDS					
CAJUN ELECTRIC POWER OXBOW	1	NEW	540.	PROCESS NOT SELECTED VENDOR NOT SELECTED	0/85
DESERET GEN & TRANS BONANZA	2	NEW	410.	LIMESTONE VENDOR NOT SELECTED	0/88
GENERAL PUBLIC UTILITIES COAL	1	NEW	625.	PROCESS NOT SELECTED VENDOR NOT SELECTED	5/91
GENERAL PUBLIC UTILITIES SEWARD	7	NEW	690.	PROCESS NOT SELECTED VENDOR NOT SELECTED	5/89
JACKSONVILLE ELEC AUTHORITY ST.JOHNS RIVER PWR PARK1		NEW	600.	LIMESTONE VENDOR NOT SELECTED	12/85
JACKSONVILLE ELEC AUTHORITY ST.JOHNS RIVER PWR PARK2		NEW	600.	LIMESTONE VENDOR NOT SELECTED	6/87
LOUISVILLE GAS & ELECTRIC TRIMBLE COUNTY	1	NEW	575.	PROCESS NOT SELECTED VENDOR NOT SELECTED	7/85
LOUISVILLE GAS & ELECTRIC TRIMBLE COUNTY	2	NEW	575.	PROCESS NOT SELECTED VENDOR NOT SELECTED	7/89
SOUTHERN INDIANA GAS & ELEC A.B. BROWN	2		265.	PROCESS NOT SELECTED VENDOR NOT SELECTED	1/85
TEXAS UTILITIES FOREST GROVE	1	NEW	750.	PROCESS NOT SELECTED VENDOR NOT SELECTED	0/87
TOTAL			5630.		

SECTION 12
SUMMARY OF PLANNED FGD SYSTEMS

COMPANY NAME/ UNIT NAME	UNIT NO.	NEW OR RETROFIT	CAPACITY MW	PROCESS/ SYSTEM SUPPLIER	START-UP DATE
CONSIDERING FGD SYSTEMS					
ATLANTIC CITY ELECTRIC CUMBERLAND	1	NEW	330.	PROCESS NOT SELECTED VENDOR NOT SELECTED	1/88
CAJUN ELECTRIC POWER CHICOT	1	NEW	562.	PROCESS NOT SELECTED VENDOR NOT SELECTED	0/86
CAJUN ELECTRIC POWER CHICOT	2	NEW	562.	PROCESS NOT SELECTED VENDOR NOT SELECTED	0/88
CAJUN ELECTRIC POWER CHICOT	3	NEW	562.	PROCESS NOT SELECTED VENDOR NOT SELECTED	0/92
CAJUN ELECTRIC POWER CHICOT	4	NEW	562.	PROCESS NOT SELECTED VENDOR NOT SELECTED	0/94
CAJUN ELECTRIC POWER OXBOW	2	NEW	540.	PROCESS NOT SELECTED VENDOR NOT SELECTED	0/85
CENTRAL ILLINOIS LIGHT DUCK CREEK	2	NEW	450.	LIMESTONE VENDOR NOT SELECTED	1/87
CENTRAL MAINE POWER SEARS ISLAND	1	NEW	600.	PROCESS NOT SELECTED VENDOR NOT SELECTED	11/89
CENTRAL POWER & LIGHT COLETO CREEK	2	NEW	720.	PROCESS NOT SELECTED VENDOR NOT SELECTED	9/92
CINCINNATI GAS & ELECTRIC EAST BEND	1	NEW	650.	PROCESS NOT SELECTED VENDOR NOT SELECTED	0/88
COLUMBUS & SOUTHERN OHIO ELEC POSTON	5	NEW	375.	PROCESS NOT SELECTED VENDOR NOT SELECTED	8/86
COLUMBUS & SOUTHERN OHIO ELEC POSTON	6	NEW	375.	PROCESS NOT SELECTED VENDOR NOT SELECTED	0/89
DELMARVA POWER & LIGHT VIENNA	9	NEW	550.	PROCESS NOT SELECTED VENDOR NOT SELECTED	5/90
FLORIDA POWER & LIGHT MARTIN	3	NEW	800.	PROCESS NOT SELECTED VENDOR NOT SELECTED	0/87
FLORIDA POWER & LIGHT MARTIN	4	NEW	800.	PROCESS NOT SELECTED VENDOR NOT SELECTED	0/89
GENERAL PUBLIC UTILITIES COAL	2	NEW	625.	PROCESS NOT SELECTED VENDOR NOT SELECTED	5/93
GENERAL PUBLIC UTILITIES COAL	3	NEW	625.	PROCESS NOT SELECTED VENDOR NOT SELECTED	5/95
GENERAL PUBLIC UTILITIES COAL	4	NEW	625.	PROCESS NOT SELECTED VENDOR NOT SELECTED	5/96
INDIANAPOLIS POWER & LIGHT PATRIOT	1	NEW	650.	LIMESTONE VENDOR NOT SELECTED	0/87
INDIANAPOLIS POWER & LIGHT PATRIOT	2	NEW	650.	LIMESTONE VENDOR NOT SELECTED	0/ 0
INDIANAPOLIS POWER & LIGHT PATRIOT	3	NEW	650.	LIMESTONE VENDOR NOT SELECTED	0/ 0
KENTUCKY UTILITIES HANCOCK	2	NEW	650.	LIMESTONE VENDOR NOT SELECTED	4/94

SECTION 12
SUMMARY OF PLANNED FGD SYSTEMS

COMPANY NAME/ UNIT NAME	UNIT NO.	NEW OR RETROFIT	CAPACITY MW	PROCESS/ SYSTEM SUPPLIER	START-UP DATE
LANSING BOARD OF WATER & LIGHT ERICKSON	2	NEW	160.	PROCESS NOT SELECTED VENDOR NOT SELECTED	1/87
LOS ANGELES DEPT OF WTR & PWR INTERMOUNTAIN	1	NEW	820.	LIME VENDOR NOT SELECTED	0/86
LOS ANGELES DEPT OF WTR & PWR INTERMOUNTAIN	2	NEW	820.	LIME VENDOR NOT SELECTED	0/87
LOS ANGELES DEPT OF WTR & PWR INTERMOUNTAIN	3	NEW	820.	LIME VENDOR NOT SELECTED	0/88
LOS ANGELES DEPT OF WTR & PWR INTERMOUNTAIN	4	NEW	820.	LIME VENDOR NOT SELECTED	0/89
LOWER COLORADO RIVER AUTH FAYETTE POWER PROJECT	3	NEW	435.	LIMESTONE VENDOR NOT SELECTED	0/88
NEBRASKA PUBLIC POWER DISTRICT FOSSIL III	1	NEW	650.	PROCESS NOT SELECTED VENDOR NOT SELECTED	3/92
NEVADA POWER HARRY ALLEN	1	NEW	500.	PROCESS NOT SELECTED VENDOR NOT SELECTED	6/86
NEVADA POWER HARRY ALLEN	2	NEW	500.	PROCESS NOT SELECTED VENDOR NOT SELECTED	6/87
NEVADA POWER HARRY ALLEN	3	NEW	500.	PROCESS NOT SELECTED VENDOR NOT SELECTED	6/88
NEVADA POWER HARRY ALLEN	4	NEW	500.	PROCESS NOT SELECTED VENDOR NOT SELECTED	6/89
NORTHERN STATES POWER METRO COAL	1	NEW	200.	LIME VENDOR NOT SELECTED	0/90
NORTHERN STATES POWER SHERBURNE	3	NEW	810.	LIME VENDOR NOT SELECTED	0/85
PACIFIC GAS & ELECTRIC MONTEZUMA	1	NEW	800.	LIMESTONE VENDOR NOT SELECTED	6/93
PACIFIC GAS & ELECTRIC MONTEZUMA	2	NEW	800.	LIMESTONE VENDOR NOT SELECTED	6/94
PACIFIC POWER & LIGHT JIM BRIDGER	1	RETROFIT	550.	SODIUM CARBONATE VENDOR NOT SELECTED	0/88
PACIFIC POWER & LIGHT JIM BRIDGER	2	RETROFIT	550.	SODIUM CARBONATE VENDOR NOT SELECTED	0/90
PACIFIC POWER & LIGHT JIM BRIDGER	3	RETROFIT	550.	SODIUM CARBONATE VENDOR NOT SELECTED	0/86
PWR AUTHORITY OF STATE OF NY FOSSIL		NEW	700.	PROCESS NOT SELECTED VENDOR NOT SELECTED	4/87
SALT RIVER PROJECT CORONADO	3	NEW	280.	LIMESTONE VENDOR NOT SELECTED	0/89
SOUTHWESTERN ELECTRIC POWER DOLET HILLS	2	NEW	720.	LIMESTONE VENDOR NOT SELECTED	0/88
SOYLAND POWER SOYLAND	1	NEW	500.	PROCESS NOT SELECTED VENDOR NOT SELECTED	6/87
TEXAS UTILITIES MILL CREEK	1	NEW	750.	PROCESS NOT SELECTED VENDOR NOT SELECTED	0/87

SECTION 12
SUMMARY OF PLANNED FGD SYSTEMS

COMPANY NAME/ UNIT NAME	UNIT NO.	NEW OR RETROFIT	CAPACITY MW	PROCESS/ SYSTEM SUPPLIER	START-UP DATE
TEXAS UTILITIES MILL CREEK	2	NEW	750.	PROCESS NOT SELECTED VENDOR NOT SELECTED	0/88
WASHINGTON WATER POWER CRESTON COAL	1	NEW	570.	LIMESTONE VENDOR NOT SELECTED	0/87
WASHINGTON WATER POWER CRESTON COAL	2	NEW	570.	LIMESTONE VENDOR NOT SELECTED	0/87
WASHINGTON WATER POWER CRESTON COAL	3	NEW	570.	LIMESTONE VENDOR NOT SELECTED	0/87
WASHINGTON WATER POWER CRESTON COAL	4	NEW	570.	LIMESTONE VENDOR NOT SELECTED	0/87
WEST TEXAS UTILITIES OKLAUNION	2	NEW	720.	PROCESS NOT SELECTED VENDOR NOT SELECTED	0/90
TOTAL			30398.		

SECTION 13
TOTAL FGD UNITS AND CAPACITY (MW) INSTALLED BY YEAR

YEAR	NEW ON LINE NO.	NEW ON LINE MW	TERMINATED NO.	TERMINATED MW	TOTAL ON LINE NO.	TOTAL ON LINE MW
1968	1	140.	0	0.	1	140.
1969	0	0.	1	140.	0	0.
1972	9	674.	0	0.	9	674.
1973	5	1568.	1	10.	13	2232.
1974	3	416.	3	340.	13	2308.
1975	7	2182.	5	628.	15	3862.
1976	7	2699.	4	1014.	18	5547.
1977	11	4589.	4	2049.	25	8087.
1978	14	4958.	0	0.	39	13045.
1979	20	6360.	2	143.	57	19262.
1980	20	6704.	0	0.	77	25966.
1981	11	4397.	0	0.	88	30363.
1982	18	6005.	0	0.	106	36368.
1983	16	6760.	0	0.	122	43128.
1984	9	5211.	0	0.	131	48339.
1985	13	6806.	0	0.	144	55145.
1986	8	4781.	0	0.	152	59926.
1987	20	12200.	0	0.	172	72126.
1988	12	7117.	0	0.	184	79243.
1989	11	6930.	0	0.	195	86173.
1990	5	2910.	0	0.	200	89083.
1991	2	1515.	0	0.	202	90598.
1992	4	2822.	0	0.	206	93420.
1993	3	2315.	0	0.	209	95735.
1994	3	2012.	0	0.	212	97747.
1995	1	625.	0	0.	213	98372.
1996	1	625.	0	0.	214	98997.
UNDEFINED	8	2246.				

SECTION 14
DESIGN AND PERFORMANCE DATA FOR OPERATIONAL PARTICLE SCRUBBERS

COMPANY NAME	COMMONWEALTH EDISON	
PLANT NAME	WILL COUNTY	
UNIT NUMBER	1	
CITY	ROMEOVILLE	
STATE	ILLINOIS	
REGULATORY CLASSIFICATION	E	
PARTICULATE EMISSION LIMITATION - NG/J	86.	(.200 LB/MMBTU)
SO2 EMISSION LIMITATION - NG/J	774.	(1.800 LB/MMBTU)
NOX EMISSION LIMITATION - NG/J	******	(****** LB/MMBTU)
NET PLANT GENERATING CAPACITY - MW	1147	
GROSS UNIT GENERATING CAPACITY - MW	167	
NET UNIT GENERATING CAPACITY W/FGD - MW	137	
NET UNIT GENERATING CAPACITY WO/FGD - MW	144	
EQUIVALENT SCRUBBED CAPACITY - MW	167	
** UNIT DATA - BOILER AND STACK		
BOILER SUPPLIER	BABCOCK & WILCOX	
BOILER TYPE	CYCLONE	
BOILER SERVICE LOAD	CYCLING	
DESIGN BOILER FLUE GAS FLOW - CU.M/S	363.36	(770000 ACFM)
BOILER FLUE GAS TEMPERATURE - C	179.4	(355 F)
STACK HEIGHT - M	107.	(350 FT)
STACK SHELL	******	
STACK TOP DIAMETER - M	3.8	(12.4 FT)
** FUEL DATA		
FUEL TYPE	COAL	
FUEL GRADE	******	
AVERAGE HEAT CONTENT - J/G	22260.	(9570 BTU/LB)
RANGE HEAT CONTENT - BTU/LB		9100-10500
AVERAGE ASH CONTENT - %	7.40	
RANGE ASH CONTENT - %	3.0-16.0	
AVERAGE MOISTURE CONTENT - %	********	
RANGE MOISTURE CONTENT - %	******	
AVERAGE SULFUR CONTENT - %	1.50	
RANGE SULFUR CONTENT - %	0.3-4.5	
AVERAGE CHLORIDE CONTENT - %	********	
RANGE CHLORIDE CONTENT - %	******	
*** PARTICLE CONTROL		
** MECHANICAL COLLECTOR		
NUMBER	0	
TYPE	NONE	
** FABRIC FILTER		
NUMBER	0	
TYPE	NONE	
** ESP		
NUMBER	1	
TYPE	COLD SIDE	
SUPPLIER	WESTERN PREC. DIVISION, JOY	
INLET FLUE GAS TEMPERATURE - C	179.4	(355 F)
PARTICLE REMOVAL EFFICENCY - %	90.0	
** PARTICLE SCRUBBER		
NUMBER	2	
INITIAL START-UP DATE	4/72	
GENERIC TYPE	VENTURI TOWER	
SPECIFIC TYPE	VARIABLE-THROAT/SIDE-MOVABLE BLADES	
TRADE NAME/COMMON NAME	N/A	
SUPPLIER	BABCOCK & WILCOX	
DIMENSIONS - FT	8.0 X 26.0 X 16.0	
GAS CONTACTING DEVICE TYPE	NONE	
LIQUID RECIRCULATION RATE - LITER/S	365.4	(5800 GPM)
L/G RATIO - LITER/CU.M	2.4	(18.0 GAL/1000ACF)
PH CONTROL ADDITIVE	LIMESTONE	
PRESSURE DROP - KPA	2.2	(9.0 IN-H2O)

COMMONWEALTH EDISON: WILL COUNTY 1 (CONT.)

SUPERFICIAL GAS VELOCITY - M/S	36.6	(120.0 FT/S)
INLET GAS FLOW RATE - CU.M/S	181.7	(385000 ACFM)
INLET GAS TEMPERATURE - C	179.4	(355 F)
PARTICLE REMOVAL EFFICIENCY - %	98.0	
ENERGY CONSUMPTION - %	4.2	

PERFORMANCE DATA

PERIOD	MODULE	AVAILABILITY	OPERABILITY	RELIABILITY	UTILIZATION	% REMOVAL SO2	% REMOVAL PART.	PER HOURS	BOILER HOURS	FGD HOURS	CAP. FACTOR
2/72	SYSTEM							696			

** PROBLEMS/SOLUTIONS/COMMENTS

IN FEBRUARY 1972 THE BABCOCK & WILCOX WET LIMESTONE FGD SYSTEM AT WILL COUNTY COMMENCED OPERATION. THE LONGEST PERIOD OF CONTINUOUS OPERATION WAS 23 DAYS WITH ONE OF THE TWO MODULES. THE SO2 REMOVAL EFFICIENCY WAS ABOUT 85% AND THE PARTICULATE MATTER REMOVAL EFFICIENCY WAS ABOUT 98%. THE SYSTEM WAS PLAGUED WITH MANY MECHANICAL PROBLEMS. THE MAIN PROBLEMS ASSOCIATED WITH THE FGD SYSTEM WEPE PLUGGING OF THE MIST ELIMINATORS, CORROSION OF THE REHEATER TUBES AND SLUDGE DISPOSAL. TO SOLVE THE MIST ELIMINATOR AND REHEATER PROBLEMS, A CONSTANT UNDERSPRAY AND INTERMITTENT OVERSPRAY WERE USED TO WASH ALL THE MIST ELIMINATOR COMPARTMENTS. THE REHEATER UNIT WAS ALSO RETUBED.
DURING THE FIRST TWO MONTHS OF 1975 MODULE A WAS OPERATIONAL WHEN NEEDED WHILE MODULE B WAS UNDERGOING MODIFICATIONS.

3/72	A					.0					
	B					35.0					
	SYSTEM							744			

** PROBLEMS/SOLUTIONS/COMMENTS

IN MARCH 1972 MODULE A WAS DOWN FOR REPAIRS AND MODIFICATION OF THE MIST ELIMINATOR WASH PIPING ASSEMBLY. MODULE B WAS REMOVED EVERY TWO OR THREE DAYS TO HAND WASH THE MIST ELIMINATOR.

OTHER PROBLEMS ENCOUNTERED DURING THE MONTH INCLUDED VIBRATION OF THE REHEATER TUBE BUNDLES, RAPID EROSION OF THE SCRUBBER SPRAY NOZZLES, AND PLUGGING OF THE VENTURI NOZZLES.

4/72	A					34.0					
	B					14.0					
	SYSTEM							720			

** PROBLEMS/SOLUTIONS/COMMENTS

MODULE A WAS OUT OF SERVICE FOR SIX DAYS IN APRIL BECAUSE OF A NEAR-RUPTURE OF A VENTURI PIPE EXPANSION JOINT AND HEAVY BUILDUP OF SOLIDS ON THE MIST ELIMINATOR.

MODULE B WAS OUT OF SERVICE MOST OF THE TIME FOR SIMILAR REPAIR OF THE VENTURI PIPE EXPANSION JOINT, AND FOR MODIFICATION OF THE REHEATER UNIT AND MIST ELIMINATOR WASH SYSTEM.

5/72	A					70.0					
	B					32.0					
	SYSTEM							744			

** PROBLEMS/SOLUTIONS/COMMENTS

MODULE B WAS OUT OF SERVICE FOR TWO WEEKS IN MAY TO REBPACE THE REHEAT, INSTALL UNDERSPRAY NOZZLES ON THE MIST ELIMINATOR, AND TO INSTALL HEAVIER SCREENS IN THE SUMP.

REHEATER PLUGGING DURING THE MONTH CAUSED ADDITIONAL OUTAGES.

6/72	A					8.0					

COMMONWEALTH EDISON: WILL COUNTY 1 (CONT.)

PERFORMANCE DATA

PERIOD	MODULE	AVAILABILITY	OPERABILITY	RELIABILITY	UTILIZATION	% REMOVAL SO2	% REMOVAL PART.	PER HOURS	BOILER HOURS	FGD HOURS	CAP. FACTOR
	B		31.0								
	SYSTEM							720			

** PROBLEMS/SOLUTIONS/COMMENTS

DURING JUNE BOTH MODULES WERE OUT OF SERVICE PART OF THE MONTH DUE TO A HIGH DIFFERENTIAL PRESSURE ACROSS THE MIST ELIMINATORS AND PLUGGING OF THE MIST ELIMINATORS DUE TO A LEAKING BYPASS VALVE.

THE RUBBER LINER IN MODULE A WAS REPLACED DURING THE MONTH.

7/72	SYSTEM							744			
8/72	A		79.0								
	B		21.0								
	SYSTEM							744			

** PROBLEMS/SOLUTIONS/COMMENTS

A TWO DAY OUTAGE DURING AUGUST WAS NECESSARY TO UNPLUG THE VENTURI NOZZLES AND THE MIST ELIMINATOR OF MODULE A.

MODULE B WAS OUT OF SERVICE 22 DAYS FOR CLEANING OF THE MIST ELIMINATOR AND REHEATER, INSTALLATION OF OVERHEAD SPRAY NOZZLES AND REPLACEMENT OF SECTIONS OF THE MIST ELIMINATOR.

THE BOILER WAS SHUTDOWN FOR TWO DAYS TO REPAIR THE TURBINE/GENERATOR.

9/72	A		.0								
	B		30.0								
	SYSTEM							720			

** PROBLEMS/SOLUTIONS/COMMENTS

THE BOILER WAS OFF LINE FROM SEPTEMBER 1 TO SEPTEMBER 5 DUE TO A LACK OF DEMAND.

AN ID FAN PROBLEM CAUSED UNSTABLE OPERATION DURING THE MONTH.

MODULE A WAS OUT OF SERVICE IN SEPTEMBER DUE TO THE NECESSARY MODIFICATION OFTHE REHEATER AND TO REPAIR THE RECYCLE TANK SCREENS.

10/72	A		.0								
	B		.0								
	SYSTEM							744			

** PROBLEMS/SOLUTIONS/COMMENTS

DURING OCTOBER THE BOILER WAS OUT OF SERVICE THE ENTIRE MONTH.

MODULES A AND B WERE OUT OF SERVICE DUE TO THE INSTALLATION OF THE REHEATER BAFFLE PLATES TO DAMPEN VIBRATIONS AND ALSO THE INSTALLATION OF AN EXPERIMENTAL MIST ELIMINATOR WASH SYSTEM.

11/72	A		.0								
	B		.0								
	SYSTEM							720			

** PROBLEMS/SOLUTIONS/COMMENTS

THE BOILER REMAINED OUT OF SERVICE DURING THE MONTH OF NOVEMBER.

MODULES A AND B REMAINED OUT OF SERVICE DUE TO UNSTABLE OPERATIONS OF THE BOILER.

PERFORMANCE DATA

PERIOD	MODULE	AVAILABILITY	OPERABILITY	RELIABILITY	UTILIZATION	% REMOVAL SO2	% REMOVAL PART.	PER HOURS	BOILER HOURS	FGD HOURS	CAP. FACTOR
12/72	A		22.0								
	B		30.0								
	SYSTEM							744			

** PROBLEMS/SOLUTIONS/COMMENTS

MODULES A AND B OPERATED INTERMITTENTLY DURING DECEMBER DUE TO TESTING OF THE ESP AND MISCELLANEOUS INSTRUMENT PROBLEMS.

1/73	A		.0								
	B		.0								
	SYSTEM							744			

** PROBLEMS/SOLUTIONS/COMMENTS

DURING JANUARY MODULES A AND B WERE OUT OF SERVICE THE ENTIRE MONTH TO PERFORM SOME NECESSARY REPAIRS AND MODIFICATIONS TO THE SYSTEM.

2/73	A		22.0								
	B		24.0								
	SYSTEM							672			

** PROBLEMS/SOLUTIONS/COMMENTS

DURING FEBRUARY MODULES A AND B REMAINED OUT OF SERVICE DUE TO CRACKS IN THE INLET DUCTWORK OF THE BOOSTER FAN.

THE IMPROPER INSTALLATION OF THE MIST ELIMINATOR IN MODULE B CAUSED PLUGGING IN THE REHEATER.

3/73	A		65.0								
	B		11.0								
	SYSTEM							744			

** PROBLEMS/SOLUTIONS/COMMENTS

MODULE A WAS OUT OF SERVICE FOR FIVE DAYS IN MARCH DUE TO PLUGGING OF THE MIST ELIMINATOR.

DURING MARCH THE BOILER WAS OUT OF SERVICE FOR APPROXIMATELY FOUR DAYS DUE TO AN INSPECTION.

MODULE B WAS OUT OF SERVICE PART OF THE MONTH DUE TO REHEATER TUBE LEAKS.

4/73	A		6.0								
	B		13.0								
	SYSTEM							720			

** PROBLEMS/SOLUTIONS/COMMENTS

DURING APRIL PROBLEMS OCCURRED DUE TO THE DEPOSITS OF CALCIUM SULFATE SCALE ON THE REHEATER TUBES OF MODULE A.

PERSISTING PROBLEMS WITH THE MIST ELIMINATOR WERE ENCOUNTERED DURING THE MONTH.

5/73	A		.0								
	B		.0								
	SYSTEM							744			

COMMONWEALTH EDISON: WILL COUNTY 1 (CONT.)

PERIOD	MODULE	AVAILABILITY	OPERABILITY	RELIABILITY	UTILIZATION	% REMOVAL SO2	% REMOVAL PART.	PER HOURS	BOILER HOURS	FGD HOURS	CAP. FACTOR
		PERFORMANCE DATA									
	** PROBLEMS/SOLUTIONS/COMMENTS										
		MODULES A AND B WERE OUT OF SERVICE FOR THE ENTIRE MONTH OF MAY.									
6/73	A		16.0								
	B		.0								
	SYSTEM								720		
	** PROBLEMS/SOLUTIONS/COMMENTS										
		DURING JUNE BOILER-RELATED PROBLEMS WERE RESPONSIBLE FOR MOST OF THE OUTAGE TIME OF MODULE A. MODULE B WAS TAKEN OUT OF SERVICE TO ALLOW CONCENTRATION ON THE PROBLEMS OF MODULE A.									
7/73	A		51.0								
	B		.0								
	SYSTEM								744		
	** PROBLEMS/SOLUTIONS/COMMENTS										
		DURING JULY PROBLEMS WERE ENCOUNTERED WITH REHEATER TUBE LEAKS ON MODULE A.									
		HIGH FAN VIBRATIONS CAUSED OUTAGE TIME DURING JULY.									
8/73	A		19.0								
	B		.0								
	SYSTEM								744		
	** PROBLEMS/SOLUTIONS/COMMENTS										
		DURING AUGUST MORE REHEATER TUBE LEAKS ON MODULE A ATTRIBUTED TO CHLORIDE CORROSION ATTACK.									
9/73	A		.0								
	B		.0								
	SYSTEM								720		
	** PROBLEMS/SOLUTIONS/COMMENTS										
		DURING SEPTEMBER MODULES A AND B REMAINED OUT OF SERVICE. DURING THIS TIME THE CHICAGO FLY ASH CO. FINISHED CLEANING AND TREATING THE NORTHEAST HALF OF THE SLUDGE POND.									
10/73	A		32.0								
	B		.0								
	SYSTEM								744		
	** PROBLEMS/SOLUTIONS/COMMENTS										
		DURING OCTOBER MODULE A TRIPPED SEVERAL TIMES DUE TO BAD LIMIT SWITCHES IN THE BYPASS AND THE BLOCK DAMPERS.									
		THE BOILER WAS TAKEN OUT OF SERVICE TO BALANCE THE BOOSTER I.D. FAN.									
11/73	A		51.0								
	B		.0								
	SYSTEM								720		
	** PROBLEMS/SOLUTIONS/COMMENTS										
		DURING NOVEMBER PROBLEMS OCCURRED WITH THE MIST ELIMINATOR DUE TO POOR GAS DISTRIBUTION.									

PERFORMANCE DATA

PERIOD	MODULE	AVAILABILITY	OPERABILITY	RELIABILITY	UTILIZATION	% REMOVAL SO2	% REMOVAL PART.	PER HOURS	BOILER HOURS	FGD HOURS	CAP. FACTOR
		MODULE A WAS TAKEN OUT OF SERVICE FOR AN INSPECTION. CLEANING AND MODIFICATIONS WERE ALSO DONE DURING NOVEMBER.									
12/73	A		.0								
	B		.0								
	SYSTEM							744			
	** PROBLEMS/SOLUTIONS/COMMENTS										
		MODULES A AND B WERE OUT OF SERVICE DURING DECEMBER DUE TO MODIFICATIONS AND MAINTENANCE TO THE ISOLATION VALVES, PUMPS, VENTURI THROATS AND THE MIST ELIMINATOR.									
1/74	A		.0								
	B		.0								
	SYSTEM							744			
	** PROBLEMS/SOLUTIONS/COMMENTS										
		MODULES A AND B WERE OUT OF SERVICE DUE TO FREEZING IN THE 10-INCH-DIAMETER, 4400 FT. LINE BETWEEN THE MODULES AND THE POND.									
		DAMAGE OCCURRED TO THE SUMP PUMPS AND ALSO SOME OTHER INSTRUMENTS DUE TO THE FREEZING.									
2/74	A		.0								
	B		.0								
	SYSTEM							672			
	** PROBLEMS/SOLUTIONS/COMMENTS										
		DURING FEBRUARY THE FROZEN PIPELINES WERE THAWED, REANCHORED AND RETURNED TO SERVICE. THE INSTRUMENTS DAMAGED BY THE FREEZING WERE REPAIRED.									
		MODULE A REMAINED OUT OF SERVICE UNTIL THE ARRIVAL OF THE SECOND-STAGE MIST ELIMINATOR.									
3/74	A		21.0								
	B		.0								
	SYSTEM							744			
	** PROBLEMS/SOLUTIONS/COMMENTS										
		MODULE A WAS OPERABLE MARCH 20, BUT WAS NOT RETURNED TO SERVICE UNTIL MARCH 27 DUE TO THE BOILER BEING OUT OF SERVICE.									
4/74	A		72.0								
	B		.0								
	SYSTEM							720			
	** PROBLEMS/SOLUTIONS/COMMENTS										
		DURING APRIL MODULE A OPERATED ON LOW-SULFUR COAL FOR 23 CONSECUTIVE DAYS. TWO SHORT INSPECTION OUTAGES OCCURRED DURING THAT TIME.									
		THE SUMP SCREEN FROM MODULE B WAS SUBSTITUTED FOR THE DAMAGED SCREEN IN MODULE A.									
5/74	A		93.0								
	B		.0								
	SYSTEM							744			

COMMONWEALTH EDISON: WILL COUNTY 1 (CONT.)

PERFORMANCE DATA

PERIOD	MODULE	AVAILABILITY	OPERABILITY	RELIABILITY	UTILIZATION	% REMOVAL SO2	% REMOVAL PART.	PER HOURS	BOILER HOURS	FGD HOURS	CAP. FACTOR
6/74	A		55.0								
	B		.0								
	SYSTEM								720		

** PROBLEMS/SOLUTIONS/COMMENTS

DURING MAY MODULE A OPERATED MOST OF THE TIME ON HIGH-SULFUR COAL. DURING THIS TIME A FEW SHORT OUTAGES OCCURRED FOR INSPECTIONS.

7/74	A		96.0								
	B		.0								
	SYSTEM								744		

** PROBLEMS/SOLUTIONS/COMMENTS

DURING JUNE MODULE A OPERATED FOR APPROXIMATELY 300 HOURS.

TWO WEEKS OF OUTAGE TIME WAS NECESSARY TO MAKE REPAIRS TO THE VENTURI THROAT DRIVE.

8/74	A		91.0								
	B		.0								
	SYSTEM								744		

** PROBLEMS/SOLUTIONS/COMMENTS

MODULE B WILL REMAIN OUT OF SERVICE UNTIL SATISFACTORY OPERATION OF MODULE A IS ACHIEVED.

9/74	A		85.0								
	B		.0								
	SYSTEM								720		

** PROBLEMS/SOLUTIONS/COMMENTS

DURING AUGUST THE BOILER WAS TAKEN OFF LINE THREE TIMES DUE TO LACK OF DEMAND.

TWO OUTAGES OCCURRED DUE TO LEAKS IN THE STEAM PIPING.

ONE OUTAGE OCCURRED DUE TO THE BALANCING OF A FAN.

10/74	A		94.0								
	B		.0								
	SYSTEM								744		

** PROBLEMS/SOLUTIONS/COMMENTS

DURING SEPTEMBER MODULE A WAS OUT OF SERVICE ONCE FOR THE REPAIR OF A SUPERHEATER LEAK AND ONCE FOR CLEANING OF DEPOSITS FROM THE VENTURI THROAT.

11/74	A		97.0								
	B		.0								
	SYSTEM								720		

** PROBLEMS/SOLUTIONS/COMMENTS

DURING OCTOBER REHEATER LEAKS CAUSED MODULE A TO BE OUT OF SERVICE TWICE. ADDITIONAL OUTAGE TIME WAS A RESULT OF A BOILER OUTAGE AND A INSPECTION OF THE MODULE.

PERIOD	MODULE	AVAILABILITY	OPERABILITY	RELIABILITY	UTILIZATION	% REMOVAL SO2	% REMOVAL PART.	PER HOURS	BOILER HOURS	FGD HOURS	CAP. FACTOR
		PERFORMANCE DATA									

** PROBLEMS/SOLUTIONS/COMMENTS

MODULE A WAS SHUT DOWN THREE TIMES DURING NOVEMBER. TWICE DUE TO LACK OF DEMAND AND ONCE FOR AN INSPECTION.

12/74	A		99.0								
	B		.0								
	SYSTEM							744			

** PROBLEMS/SOLUTIONS/COMMENTS

MODULE A WAS TAKEN OFF LINE PART OF THE MONTH TO REPAIR THE VALVE IN THE SPENT LIQUOR LINE TO THE POND AND ALSO FOR AN INSPECTION.

1/75	A		99.0								
	B		.0								
	SYSTEM							744			

** PROBLEMS/SOLUTIONS/COMMENTS

MODIFICATIONS OF MODULE B ARE STILL CONTINUING.

DURING JANUARY MODULE A WAS OUT OF SERVICE TWICE; ONCE FOR AN INSPECTION AND ONCE DUE TO LACK OF DEMAND.

2/75	A		99.0								
	B		.0								
	SYSTEM							672			

** PROBLEMS/SOLUTIONS/COMMENTS

DURING FEBRUARY MODULE A WAS OUT OF SERVICE TWO TIMES DUE TO LACK OF DEMAND AND ALSO FOR AN INSPECTION. THE INSPECTION SHOWED THAT CONDITIONS INSIDE THE MODULE WERE THE SAME AS BEFORE.

DURING THE MONTH A SMALL REHEATER LEAK IN A STAINLESS STEEL BUNDLE CAUSED THE SYSTEM TO SHUT DOWN.

DURING THE INSPECTION OF MODULE A, THE UNDERWASH NOZZLES WERE CLEANED AND A SMALL SECTION FO THE MIST ELIMINATOR WAS REPLACED.

CHICAGO FLYASH IS TREATING MATERIAL FROM THE SYSTEM WITH PORTLAND CEMENT AND FLYASH AND DUMPING THE TREATED MATERIAL INTO THE NORTH HALF OF THE HOLDING BASIN.

3/75	A		94.0	99.2			81.2				
	B		.0	.0			.0				
	SYSTEM							744	609		

** PROBLEMS/SOLUTIONS/COMMENTS

A VENTURI HOSE LEAK FORCED MODULE A OUT ONCE.

MODULE B WAS OUT OF SERVICE TWICE FOR NO DEMAND AND ONCE AS A RESULT OF AN ACCIDENTAL 50 MINUTE TRIP.

COAL BURNED THIS MONTH AVERAGED LESS THAN ONE PERCENT SULFUR.

4/75	A		37.0	39.5			35.0				
	B		.0	.0			.0				
	SYSTEM							720	638		

COMMONWEALTH EDISON: WILL COUNTY 1 (CONT.)

PERIOD	MODULE	AVAILABILITY	OPERABILITY	RELIABILITY	UTILIZATION	% REMOVAL SO2	% REMOVAL PART.	PER HOURS	BOILER HOURS	FGD HOURS	CAP. FACTOR
		PERFORMANCE DATA									

** PROBLEMS/SOLUTIONS/COMMENTS

CHICAGO FLY ASH IS TREATING MATERIAL FROM THE SCRUBBER WITH LIME AND FLY ASH AND DUMPING IT INTO THE HOLDING BASIN.

A BOILER OUTAGE FORCED MODULE A OUT OF SERVICE ONCE THIS MONTH (MODULE B WAS ALREADY OUT OF SERVICE).

COAL BURNED THIS MONTH WAS RECLAIM COAL AND VARIED IN SULFUR CONTENT.

5/75	A	84.5	84.5		84.5				
	B	37.1	37.1		37.1				
	SYSTEM							744	744

** PROBLEMS/SOLUTIONS/COMMENTS

MODULE B WAS IN SERVICE ON MAY 20 FOR THE FIRST TIME SINCE APRIL 13, 1973.

RECIRCULATION TANK MIXERS.

MODULE A (WHICH WAS THE ONLY ONE OPERATING) WAS FORCED OUT TWICE IN APRIL TO AVOID POND OVERBOARDING INTO THE DES PLAINES RIVER. THE SECOND OUTAGE LASTED UNTIL MAY 5. DURING THE PAST SEVERAL MONTHS OF GENERALLY CONTINUOUS OPERATION OF MODULE A. IT HAS BECOME APPARENT THAT THE PRESENT LIQUID CIRCULATING SYSTEM CANNOT BE OPERATED IN A CONTINUOUSLY CLOSED CYCLE. THE WATER IMBALANCE POSES A HIGH RISK OF OVERBOARDING FROM THE SLUDGE POND DURING LONG PERIODS OF SUSTAINED OPERATON. THE FOLLOWING REVISIONS HAVE BEEN MADE TO REDUCE THE WATER IMBALANCE:

1. THE PUMP GLAND WATER FLOWS HAVE BEEN CUT FROM 10 GPM TO 5 GPM.
2. THE SCRUBBER HOUSE SERVICE WATER FILTER BACKWASH HAS BEEN ROUTED OUT OF THE SYSTEM.
3. THE CONTINUOUS UNDERSPRAY HAS BEEN CHANGED TO AN INTERMITTENT SPRAY 5 MINUTES ON, 5 MINUTES OFF.

THE THICKENER HAS BEEN DOWN SINCE APRIL 21 DUE TO A BROKEN GEAR AND A STUCK SWEEP ARM. THE THICKENER HAS BEEN BYPASSED AND THE SLUDGE IS GOING TO THE POND.

DURING MAY, MODULE A WAS OUT FOR 45 MINUTES DUE TO A DAMPER TRIP.

MODULE A WAS OUT ONCE FOR SPRAY NOZZLE CLEANING.

MODULE B WAS OUT TWICE AFTER START UP, ONCE FOR A VENTURI PUMP TRIP AND ONCE FOR A RECIRCULATION TANK LEVEL TRIP.

CHICAGO FLY ASH IS TREATING THE MATERIAL FROM THE SCRUBBER WITH LIME AND FLY ASH AND DUMPING IT INTO THE HOLDING BASIN. A MIXER HAS BEEN INSTALLED AT THE THICKENER, WHICH ENABLES THEM TO SUBSTITUTE SEALED DUMP TRUCKS FOR THE CEMENT TRUCKS WHICH WERE USED IN THE PAST FOR MIXING AND TRANSPORTING THE WASTE MATERIAL TO THE HOLDING BASIN.

COAL BURNED THIS MONTH VARIED GREATLY IN SULFUR CONTENT, RANGING FROM LOW SULFUR WESTERN COAL TO HIGH SULFUR ILLINOIS COAL.

6/75	A	64.1	60.6		54.1				
	B	85.5	84.6		75.4				
	SYSTEM							720	642

** PROBLEMS/SOLUTIONS/COMMENTS

A REHEATER PLUGGAGE INSPECTION FORCED ONE MODULE A OUTAGE.

A LOW LEVEL TRIP CAUSED A 35 MINUTE OUTAGE, AND NO DEMAND ACCOUNTED FOR TWO

PERIOD	MODULE	AVAILABILITY	OPERABILITY	RELIABILITY	UTILIZATION	% REMOVAL SO2	% REMOVAL PART.	PER HOURS	BOILER HOURS	FGD HOURS	CAP. FACTOR

MORE MODULE A OUTAGES.

MODULE B WAS OUT FOR 95 HOURS TO CLEAN THE BOOSTER FAN AND DEMISTER.

HIGH BOOSTER FAN VIBRATIONS CAUSED MODULE B TO SHUT DOWN ON JUNE 30.

DURING THIS MONTH HIGH SULFUR COAL WAS BURNED IN A TWO WEEK TEST, AND LOW SULFUR COAL WAS BURNED THE REST OF THE MONTH.

7/75	A		.0		.0			.0			
	B		79.2		79.4			73.5			
	SYSTEM								744	689	

** PROBLEMS/SOLUTIONS/COMMENTS

CHICAGO FLY ASH IS TREATING THE SCRUBBER WASTE MATERIAL WITH LIME AND FLY ASH AND DUMPING IT INTO THE ON SITE HOLDING BASIN. THE MATERIAL FROM THE HOLDING BASIN IS BEING TRUCKED TO AN OFF SITE DUMP.

MODULE B WAS OUT ONCE (30 MINUTES) TO REPAIR A MINOR STEAM HEADER LEAK.

MODULE B WAS OUT ONCE DUE TO NO DEMAND.

LOW SULFUR COAL WAS BURNED MOST OF THIS MONT, WITH HIGH SULFUR COAL BEING BURNED DURING THE LAST WEEK OF THE MONTH.

8/75	A		.0		.0			.0			
	B		93.5		100.0			76.4			
	SYSTEM								744	565	

** PROBLEMS/SOLUTIONS/COMMENTS

IN JUNE, MODULE A ENCOUNTERED PLUGGAGE IN THE DEMISTER, WHICH REQUIRED ITS REPLACEMENT. THE WORK WAS COMPLETED IN AUGUST.

MODULE A WENT OUT OF SERVICE ON JUNE 20 AND REMAINED OUT THROUGH AUGUST DUE TO MASSIVE REHEATER LEAKS. THERE IS PRESENTLY A HOLD ON THE NEW REHEATER ORDER BECAUSE OF MATERIAL FAILURES EXPERIENCED IN MODULE B'S CARBON STEEL REHEATER.

MODULE B SUFFERED TWO OUTAGES IN JULY AND ONE IN AUGUST BECAUSE OF REHEATER TUBE LEAKS. THE FAILURES WERE DUE TO VIBRATION FATIGUE. THE REHEATER, WHICH WAS INSTALLED IN MAY, HAS LOST SIX OF ITS TWELVE TUBE BUNDLES SO FAR. THE LENGTH OF TIME THAT THE TUBES HAVE LASTED WOULD SEEM TO INDICATE THAT THERE IS A DIESIGN RELATED MATERIAL DEFICIENCY. THREE OF THE TUBE BUNDLES WERE REPLACED WITH MARGINAL BUNDLES LEFT OVER FROM MODULE A.

A SMALL STEAM HEADER LEAK CAUSED ONE MODULE B OUTAGE.

MODULE B WAS OUT FOUR TIMES FOR NO DEMAND AND ONCE FOR A LOW FLOW TRIP.

HIGH SULFUR COAL WAS BURNED ALL MONTH, CAUSING AN INCPEASE IN SLUDGE PRODUCTION WHICH HAS FORCED A MINIMUM SIX DAY A WEEK, TEN HOUR A DAY SLUDGE DISPOSAL OPERATION. THE SLUDGE IS BEING TREATED WITH LIME AND FLY ASH AND BEING DUMPED INTO THE ON SITE HOLDING POND. STABILIZED MATERIAL IS BEING TRUCKED FROM THE POND TO AN OFF SITE DISPOSAL AREA.

9/75	A										
	B										
	SYSTEM								720		
10/75	A		.0		.0			.0			
	B		32.3		100.0			26.6			
	SYSTEM								744	194	

COMMONWEALTH EDISON: WILL COUNTY 1 (CONT.)

PERIOD	MODULE	AVAILABILITY	OPERABILITY	RELIABILITY	UTILIZATION	% REMOVAL SO2	% REMOVAL PART.	PER HOURS	BOILER HOURS	FGD HOURS	CAP. FACTOR
		PERFORMANCE DATA									

** PROBLEMS/SOLUTIONS/COMMENTS

MODULE A WAS OFF THE ENTIRE 11 DAYS THE BOILER OPERATED THIS MONTH, WAITING FOR ITS NEW REHEATER, WHICH HAS NOW BEEN RELEASED FOR MANUFACTURING BY SMED.

MODULE B HAD TWO OUTAGES, ONE FOR NO DEMAND AND ONE MINOR 15 MINUTE TRIP.

HIGH SULFUR COAL WAS BURNED THIS MONTH WHEN THE SCRUBBER WAS IN SERVICE.

THE SLUDGE IS BEING TREATED WITH LIME AND FLY ASH AND HAULED TO AN OFF SITE DISPOSAL AREA.

11/75	A	.0		.0					
	B	.0		.0					
	SYSTEM						720	0	
12/75	A	.0		.0					
	B	.0		.0					
	SYSTEM						744	0	
1/76	A	.0		.0					
	B	.0		.0					
	SYSTEM						744	0	
2/76	A	.0		.0					
	B	.0		.0					
	SYSTEM						696	0	
3/76	A	30.1	45.2	18.8					
	B	8.8	20.4	8.5					
	SYSTEM						744	309	

** PROBLEMS/SOLUTIONS/COMMENTS

UNIT 1 WAS DOWN FROM OCTOBER 11 THROUGH MARCH 19 FOR ITS BOILER TURBINE AND SCRUBBER OVERHAUL. THE MAJOR ITEMS TO BE ACCOMPLISHED DURING THE OUTAGE WERE:

1. SIMPLIFICATION OF THE MILLING SYSTEM CONTROL.
2. PULLING AND CLEANING OF THE MODULE B REHEATER AND RETURNING IT REPLACED WITH MARGINAL BUNDLES LEFT OVER FROM MODULE A.
3. CLEANING OF THE POND PUMP BAY.
4. REMOVAL OF THE VENTURI AND ABSORBER PUMP CHECK VALVES (ONE OF THEM FAILED LAST SPRING AND DESTROYED A PUMP LINER AND IMPELLER).
5. CLEANING AND REPAIR OF THE VENTURI NOZZLES AND SUPPORTS.
6. REPAIR OF CORRODED REHEATER SUPPORTS.
7. RESETTING AND ADJUSTMENT OF ALL DAMPERS.
8. REVISION OF SCRUBBER CONTROLS BY REMOVING THE CONTROLS NO LONGER USED OR NEEDED.
9. INSPECTION AND CLEANING OF THE ENTIRE SCRUBBER AND RELATED EQUIPMENT.

MODULE A WAS PUT INTO THE GAS PATH ON MARCH 22 AND REMAINED AVAILABLE FOR SERVICE THE REST OF THE MONTH.

MODULE B HAD TO REMAIN OUT OF SERVICE UNTIL MARCH 29 WHILE ITS REPAIRED REHEATER WAS INSTALLED.

4/76	A	23.0	20.0	19.2					
	B		49.3	47.3					
	SYSTEM						720	691	

PERIOD	MODULE	AVAILABILITY	OPERABILITY	RELIABILITY	UTILIZATION	% REMOVAL SO2	% REMOVAL PART.	PER HOURS	BOILER HOURS	FGD HOURS	CAP. FACTOR
		PERFORMANCE DATA									

** PROBLEMS/SOLUTIONS/COMMENTS

UNIT 1 RETURNED TO SERVICE APRIL 2 AFTER A SHORT TURBINE CONTROL OUTAGE. BOTH MODULES CAME ON LINE JUST BEFORE THE BOILER.

A FIVE DAY OUTAGE OF MODULE B WAS DUE TO REHEATER TUBE BUNDLE LEAKS.

SEVEPAL MODULE B OUTAGES WERE DUE TO PLUGGED ABSORBER TANK SCREENS CAUSED BY MILL AND CLASSIFIER FAILURES WHICH ALLOWED ROCK TO GET INTO THE SYSTEM. MODULE B WAS THOROUGHLY CLEANED.

ONLY ONE ABSORBER PUMP IS BEING USED IN MODULE B, SINCE THE 1B2 PUMP LINER FAILED AS A RESULT OF A BROKEN DISCHARGE VALVE. A REPLACEMENT LINER IS BEING INSTALLED.

A SCRUBBER TESTING AND EVALUATING PROGRAM WAS STARTED THIS MONTH. MUCH OF THE LATTER TWO WEEKS OF THE MONTH WERE SPENT TRAINING THE TESTING PERSONNEL. THE PROGRAM WILL PROVIDE CHEMISTRY DATA AND OPERATING CHARACTERISTICS.

5/76	A	.0	.0	.0					
	SYSTEM							744	665

** PROBLEMS/SOLUTIONS/COMMENTS

A VENTRUI HOSE LEAK FORCED MODULE B OFF ONCE THIS MONTH.

MODULE B WAS TAKEN OUT OF SERVICE ONCE BECAUSE OF A PLUGGED ABSORBER TANK SCREEN.

MODULE B WAS OFF ONCE DUE TO A FOULED I.D. FAN.

MODULE B WAS OUT OF THE GAS PATH ONCE DUE TO NO DEMAND.

6/76	A	52.0	44.2	37.6					
	B	86.2	84.5	71.9					
	SYSTEM							720	612

** PROBLEMS/SOLUTIONS/COMMENTS

MODULE A SUFFERED VENTURI PUMP LINER FAILURES ON APRIL 78 WHEN AN INLET 16 INCH BUTTERFLY ISOLATION VALVE BROKE APART AND FELL INTO THE VENTURI PUMP. BOTH THE A AND BACKUP AB VENTURI PUMP LINERS WERE DESTROYED. MODULE A REMAINED OUT SERVICE UNITL JUNE 9, WHEN THE LINERS WERE REPLACED.

MODULE A WAS OFF ONCE FOR SHEARED BYPASS DAMPER PINS.

I.D. BOOSTER FAN FOULING FORCED MODULE A OFF ONCE THIS MONTH FOR ABOUT 164 HOURS.

BOTH MODULES WERE OFF TWICE DUE TO NO DEMAND. DURING THESE OUTAGES, THE DEMISTERS WERE WASHED AND ABSORBER TRAY SCALE, IF ANY, WAS KNOCKED OFF.

MODULE B WAS OUT OF THE GAS PATH FOR SEVERAL SHORT VENTURI LOW FLOW TRIP OUTAGES DUE TO A PLUGGED, SCALED VENTURI TANK SCREEN. AT THE END OF THE MONTH, THE MODULE WAS TAKEN OUT TO CLEAN THE SCREEN.

THE MODULE B I.D. BOOSTER FAN REQUIRED CLEANING DURING THE MONTH.

THE REHEATER TUBES ARE SCALING, WHICH RESULTS IN A LOWER HEAT TRANSFER RATE RATE, AND THEREFORE INCREASES I.D. BOOSTER FAN FOULING. THE ONLY WAY TO CLEAN THE REHEATERS EFFECTIVELY IS TO REMOVE THEM, WHICH DEMANDS A SUBSTANTIAL OUTAGE.

COMMONWEALTH EDISON: WILL COUNTY 1 (CONT.)

PERIOD	MODULE	AVAILABILITY	OPERABILITY	RELIABILITY	UTILIZATION	% REMOVAL SO2	% REMOVAL PART.	PER HOURS	BOILER HOURS	FGD HOURS	CAP. FACTOR
7/76	A	19.9	.0		.0						
	B	86.2	90.0		72.3						
	SYSTEM							744	598		

** PROBLEMS/SOLUTIONS/COMMENTS

MODULE A WAS OFF THE FIRST PART OF THE MONTH DURING REPAIRS TO THE ABSORBER

THE LATTER PART OF THE MONTH THE MODULE WAS READY FOR SERVICE BUT WAS NOT OPERATED BECAUSE OF THICKENER-POND SLUDGE OVERLOADING.

MODULE B WAS FORCED OFF ONCE TO BALANCE THE I.D. BOOSTER FAN, AND ONCE TO WASH THE FAN.

MODULE B WAS OUT OF THE GAS PATH TWICE DUE TO NO DEMAND.

8/76	A	98.2	57.6		38.3						
	B	65.4	61.4		40.9						
	SYSTEM							744	495		

** PROBLEMS/SOLUTIONS/COMMENTS

MODULE A WAS OUT OF THE GAS PATH THE FIRST HALF OF THE MONTH T AVOID THICKENER-POND OVERLOADING.

DURING THE LATTER HALF OF THE MONTH, MODULE A WAS USED WITH THREE MINOR FORCED OUTAGES AND ONE FOUR DAY NO DEMAND OUTAGE.

MODULE B WAS OUT OF THE GAS PATH THREE TIMES DUE TO NO DEMAND.

LOSS OF CHEMICAL CONTROL CAUSED TWO MODULE A OUTAGES.

MODULE B WAS OFF FOR NINE DAYS DUE TO FOULING.

SPENT SLURRY VALVE REPAIRS FORCED A MODULE B OUTAGE.

ON AUGUST 12 THE OPERATING PH CONTROL SET POINT WAS REDUCED FROM 5.4 TO 5.1. IT IS BELIEVED THAT THIS LOWER PH IS THE CAUSE OF THE FOULING OUTAGE OF MODULE B ON AUGUST 21. MODULE A WAS ALSO OPERATED FOR THREE DAYS, AND IT, TOO, EXPERIENCED INCREASED SACLE FOULING. THE PH SET POINT WAS THEN INCREASED BACK TO 5.4.

9/76	A	42.3	28.7		22.6						
	B	79.4			59.9						
	SYSTEM							720	566		

** PROBLEMS/SOLUTIONS/COMMENTS

MODULE A WENT OFF ONCE DUE TO A LOW FLOW TRIP.

MODULE A WAS TAKEN OFF ONCE FOR CLEANING OF THE RECIRCULATION TANK AND PUMPS, AND INSPECTION OF PUMP ISOLATION VALVES.

A LINER LEAK IN 1A2 ABOSORBER PUMP ALSO FORCED MODULE A OFF.

MODULE A WAS OUT OF TH GAS PATH TWICE DUE TO NO DEMAND.

MODULE A WAS TAKEN OFF ONCE TO AVOID THICKENE -POND OVERLOADING.

SPENT SLURRY VALVE TROUBLE CAUSED TWO MODULE B OUTAGES.

10/76	A	27.9	28.9		37.9						

PERIOD	MODULE	AVAILABILITY	OPERABILITY	RELIABILITY	UTILIZATION	% REMOVAL SO2	% REMOVAL PART.	PER HOURS	BOILER HOURS	FGD HOURS	CAP. FACTOR
	B	76.4	56.2		54.8						
	SYSTEM							744	726		

** PROBLEMS/SOLUTIONS/COMMENTS

HIGH SULFUR ILLINOIS COAL WAS BURNED IN THE BOILER FROM MARCH THROUGH OCTOBER.

THE SCRUBBER WASTE MATERIAL WAS TREATED WITH LIME AND FLY ASH AND HAULED TO AN OFF SITE DISPOSAL AREA.

MODULE A OPERATED ON ONE ABSORBER PUMP, ALLOWING TESTING ON A LOWER ABSORBER FAN.

MODULE A WAS OUT OF THE GAS PATH ONCE FOR AN I.D. BOBOOSTER FAN TRIP.

WORK ON RECIRCULATION TANK LEVEL CONTROLS CAUSED A MODULE A OUTAGE.

MODULE B WAS FORCED OFF ONCE TO REPAIR A REHEATER HEADER LEAK.

ONE MODULE B OUTAGE WAS FOR VENTURI NOZZLE CLEANING.

MODULE B WENT OFF FOR A VENTURI LOW FLOW TRIP.

MODULE B REMAINED OUT OF SERVICE WHILE MODULE A WAS BEING TESTED TO AVOID THICKENER-POND OVERLOADING.

A VACUUM FILTER WAS TIED IN AT THE THICKENER.

11/76	A	20.1	25.6		20.1						
	B	72.2	69.6		4.7						
	SYSTEM							720	566		

** PROBLEMS/SOLUTIONS/COMMENTS

MODULE A OPERATED ON ONE ABSORBER PUMP DURING MODULE B OUTAGE.

MODULE B WAS FORCED OUT OF THE GAS PATH ONCE FOR A MILLING SYSTEM FAILURE.

MODULE B ENCOUNTERED A VENTURI HEADER LEAK.

THE VENTURI NOZZLES REQUIRED CLEANING DURING THE MONTH.

REPLACEMENT OF THE SPENT SLURRY VALVE NECESSITATED A MODULE OUTAGE.

MODULE B WAS OFF ONCE DUE TO A CHEMICAL SYSTEM UPSET.

MODULE B WAS OUT OF THE GAS PATH TWICE DUE TO NO DEMAND (MODULE A WAS NOT IN SERVICE AT THE TIME OF THE OUTAGE).

12/76	A	44.9	48.3		44.9						
	B	53.4	51.7		48.0						
	SYSTEM							744	692		

** PROBLEMS/SOLUTIONS/COMMENTS

DURING THE LAST WEEK OF NOVEMBER, THE 1A2 ABSORBER PUMP WAS TAKEN OUT OF SERVICE FOR OVERHAUL. THE REPAIRS WERE COMPLETED ON DECEMBER 6, WHEN THE MODULE ASSUMED A ONE ABSORBER PUMP STANDBY CAPABILITY UNTIL THE 1A1 ABSORBER PUMP CAN BE REPAIRED.

DURING THE LAST HALF OF THE MONTH, MODUELE A OPERATED WHILE MODULE B WAS BEING REPAIRED.

COMMONWEALTH EDISON: WILL COUNTY 1 (CONT.)

PERFORMANCE DATA

PERIOD	MODULE	AVAILABILITY	OPERABILITY	RELIABILITY	UTILIZATION	% REMOVAL SO2	% REMOVAL PART.	PER HOURS	BOILER HOURS	FGD HOURS	CAP. FACTOR
			MODULE B PERFORMED SATISFACTIORILY DURING THE FIRST HALF OF THE MONTH, EXPERIENCING ONLY ONE NO DEMAND OUTAGE. ON THE 17TH, HOWEVER, THE SPENT SLURRY VALVE FAILED AND THE MODULE HAS REMAINED OUT OF SERVICE.								
1/77	A	98.2	98.7		95.8						
	B	13.5	1.1		1.1						
	SYSTEM							744	722		

** PROBLEMS/SOLUTIONS/COMMENTS

THE 1A1 ABSORBER PUMP WENT OUT IN LATE SEPTEMBER WITH BURNED OUT BEARINGS AND REMAINED OUT THROUGH JANUARY WAITING FOR PARTS.

LOW SULFUR COAL WAS BURNED IN THE BOILER FROM NOVEMBER THROUGH JANUARY.

DUE TO THE LOW VOLUME OF SLUDGE PRODUCED WHILE BURNING LOW SULFUR COAL, MUCH OF THE SLUDGE HANDLING TIME WAS SPENT DIGGING OUT THE ACCUMULATED SLUDGE IN THE RECIRCULATION PONDS. THIS MATERIAL, ALONG WITH SCRUBBER WASTE MATERIAL, WAS TREATED WITH LIME AND FLYASH AND HAULED TO AN OFF SITE DISPOSAL AREA.

MODULE A WAS FORCED OUT ONCE BY A FAILED SPENT SLURRY VALVE.

PLUGGED DEMISTER UNDERSPRAYS CAUSED ANOTHER MODULE A OUTAGE.

MODULE A WENT OUT ONCE BECAUSE OF NO DEMAND AND ONCE DUE TO A BOILER OUTAGE (MODULE B WAS ALREADY OUT OF SERVICE FOR REPAIRS).

MODULE B BECAME AVAILABLE FOR SERVICE ON JANUARY 27, AFTER REPAIRS TO THE SPENT SLURRY VALVE WERE COMPLETED. DUE TO SEVERE WEATHER CONDITIONS, THE MODULE WAS PLACED IN THE GAS PATH JANUARY 31.

2/77	A	38.8	42.6		38.8						
	B	72.0	45.7		41.7						
	SYSTEM							672	613		

** PROBLEMS/SOLUTIONS/COMMENTS

THERE WAS VERY LITTLE DIGGING IN THE RECIRCULATION PONDS. CHICAGO FLYASH SPENT MOST OF THEIR TIME ON CLEANING AND MAINTENANCE.

3/77	A	96.9	66.7		64.2						
	B	80.9	75.5		73.9						
	SYSTEM							744	728		

** PROBLEMS/SOLUTIONS/COMMENTS

AN ERT SO2 ANALYZER WAS INSTALLED ON THE DISCHARGE SIDE OF MODULE B I.D. BOOSTER FAN. THIS IS AN "IN SITU" ON-DISPERSIVE ANALYZER THAT CONTINUALLY MEASURES AND READS OUT CONCENTRATIONS OF SO2, CO, CO2, AND NO.

AN ABSORBER SUCTION HEADER LEAK FORCED MODULE B FROM THE GAS PATH.

MODULE B WAS FORCED OUT DUE TO A SLURRY VALVE GASKET LEAK.

A PLUGGED FEED SLURRY RECIRCULATION LINE WAS ENCOUNTERED IN MODULE B.

HIGH SULFUR COAL WAS BURNED FOR SEVEN DAYS THIS MONTH TO PROVIDE HIGH SULFUR SLUDGE FOR THE UOP SLUDGE TEST.

CHICAGO FLYASH SPENT 75% OF THEIR TIME DIGGING IN THE POND. THE REST WAS SPENT ON THE THICKENER AND VACUUM FILTER IPERATION. THE SCRUBBER WASTE MATERIAL WAS TREATED WITH LIME FLYASH AND HAULED OFF SITE. DISPOSAL AREA.

PERIOD	MODULE	AVAILABILITY	OPERABILITY	RELIABILITY	UTILIZATION	% REMOVAL SO2	% REMOVAL PART.	PER HOURS	BOILER HOURS	FGD HOURS	CAP. FACTOR
		PERFORMANCE DATA									
4/77	A	86.1	67.7		61.2						
	B	45.5	30.2		27.3						
	SYSTEM							720	650		

** PROBLEMS/SOLUTIONS/COMMENTS

THE PERFORMANCE OF THE ERT SO2 ANALYZER TO DATE HAS BEEN, AT BEST, UNRELIABLE AND INCONSISTENT. THE ERT TECHNICIANS ARE OUT TO SERVICE THE ANALYZER ALMOST EVERY OTHER DAY. THE PROBLEM, ACCORDING TO ERT TECHNICIANS, IS OF A "THERMAL NATURE". WHEN THE ANALYZER REACHES A CERTAIN TEMPERATURE, A CHIP SHORTS OUT. THEY HAVE NOT BEEN ABLE TO LOCATE THE FAULTY INTEGRATED CIRCUIT YET.

A BOILER TUBE LEAK REPAIR FORCED MODULE A OUT OF THE GAS PATH ONCE THIS MONTH (MODULE B WAS ALREADY DOWN FOR REPAIRS).

MODULE B WAS FORCED OUT OF THE GAS PATH TWICE FOR AN ABSORBER SUCTION HEADER LEAK REPAIR.

MODULE B WAS OUT OF SERVICE ONCE TO WASH THE I. D. BOOSTER FAN.

CHICAGO ADMIXTURES SPENT MOST OF THEIR TIME DIGGING IN THE SMALL POND, GETTING READY FOR THE MGO ADDITION AND FORCED OXIDATION TEST. THE SCRUBBER WASTE MATERIAL WAS TREATED WITH LIME AND FLYASH AND HAULED TO AN OFF SITE DISPOSAL AREA.

5/77	A	89.4	2.2		2.0						
	B	98.0	50.9		47.3						
	SYSTEM							744	691		

** PROBLEMS/SOLUTIONS/COMMENTS

THE ERT SO2 ANALYZER HAS BEEN REMOVED FROM SERVICE DUE TO A POOR PERFORMANCE RECORD OVER THE LAST THREE MONTHS. ERT IS IN THE PROCESS OF RE-ENGINEERING THEIR ANALYZER.

THE MGO ADDITION TEST WENT WELL. ALTHOUGH THE MGO INCREASED SO2 REMOVAL EFFICIENCY ABOUT 10%, IT DID PRACTICALLY NOTHING FOR THE TWO MORE SERIOUS PROBLEMS, SINCE THICKENER AND SLUDGE PRODUCTION AND LIMESTONE CONSUMPTION RATE WERE ABOUT THE SAME.

MODULE A WAS FORCED OUT OF THE GAS PATH ONCE THIS MONTH WHEN THE INLET VALVE ON 1A2 ABSORBER PUMP FAILED.

MODULE B WAS TAKEN OFF TO CLEAN AND INSPECT THE REHEATER TUBES.

BOTH MODULES WERE FORCED OFF FOR THE FIRST FIFTEEN DAYS OF THE MONTH DUE TO A FAILED 120V CONTROL TRANSFORMER FOR THE POND RETURN PUMPS. THE TRANSFORMER HAD TO BE ORDERED FROM WESTINGHOUSE.

HIGH SULFUR COAL HAS BURNED FOR ELEVEN DAYS DURING THE MONTH.

6/77	A	31.8	13.3		10.5						
	B	93.2	93.4		73.5						
	SYSTEM							720	566		

** PROBLEMS/SOLUTIONS/COMMENTS

THE 1A1 ABSORBER PUMP IS STILL OUT OF SERVICE WAITING FOR PARTS 1A2 ABSORBER PUMP'S ISOLATION VALVES FORCED MODULE A OFF FOR MOST OF THE MONTH.

MODULE A HAD ONE NO DEMAND AND ONE BOILER OUTAGE THIS MONTH.

COMMONWEALTH EDISON: WILL COUNTY 1 (CONT.)

PERIOD	MODULE	AVAILABILITY	OPERABILITY	RELIABILITY	UTILIZATION	% REMOVAL SO2	% REMOVAL PART.	PER HOURS	BOILER HOURS	FGD HOURS	CAP. FACTOR
				PERFORMANCE DATA							

MODULE B WAS ALSO FORCED OFF TO CLEAN THE I.D. BOOSTER FAN.

NO HIGH SULFUR COAL WAS BURNED THIS MONTH.

7/77	B	70.3	41.4		21.0						
	SYSTEM								744	377	

** PROBLEMS/SOLUTIONS/COMMENTS

HIGH SULFUR COAL HAS BURNED FOR EIGHT DAYS THIS MONTH. LIMESTONE OPERATION WAS NORMAL FOR HIGH SULFUR OPERATION.

MODULE B WAS FORCED OUT OF THE GAS PATH ONCE TO REMOVE A PLUGGED DIFFUSER. THE FINAL TEST, FORCED OXIDATION SEEMDD TO BE THE MOST SUCCESSFUL OF ALL. USING LIQUID OXYGEN, UP TO 12,000 CFM OF GASEOUS O2 WAS FED INTO EACH VENTURI DOWNCOMER, OXIDATION OF SULFITE TO SULFATE WAS INCREASED FROM 35 TO 90 %

MODULE B WAS ALSO FORCED OFF DUE TO A LOW LEVEL IN THE SLURRY STORAGE TANK.

MODULE B WAS ALSO FORCED OFF DUE TO REHEATER TUBE BUNDLE LEAKS.

8/77	A	99.8	99.6		80.8						
	B	9.7	12.0		9.7						
	SYSTEM								744	604	

** PROBLEMS/SOLUTIONS/COMMENTS

MODULE A WAS AVAILABLE THE ENTIRE MONTH WITH JUST THE VENTURI PUMP OPERATING.

9/77	A	61.0	77.8		54.0						
	B	52.3	75.4		52.3						
	SYSTEM								720	499	

** PROBLEMS/SOLUTIONS/COMMENTS

MODULE B ENCOUNTERED HIGH VIBERATIONS IN ITS BOOSTER FAN DURING THE FIRST WEEK OF THE MONTH. AFTER THE FAN WAS BALANCED, THE MODULE OPERATED INTIL THE UNIT OUTAGE ON SEPTEMBER 21.

10/77	A	.0			.0						
	B	.0			.0						
	SYSTEM								744	0	
11/77	A	.0			.0						
	B	8.8	50.1		8.8						
	SYSTEM								720	126	

** PROBLEMS/SOLUTIONS/COMMENTS

UNIT ONE CAME UP ON NOVEMBER 25 AFTER A SIXTY-THREE DAY OUTAGE.

MODULE B IS IN THE GAS PATH FATER EXPERIENCING SOME DIFICULTY IN BALANCING ITS BOOSTER FAN.

12/77	A	42.5	42.5	47.8	42.5						
	B	84.1	84.1	94.6	84.1						
	SYSTEM								744	661	

PERIOD	MODULE	AVAILABILITY	OPERABILITY	RELIABILITY	UTILIZATION	% REMOVAL SO2	% REMOVAL PART.	PER HOURS	BOILER HOURS	FGD HOURS	CAP. FACTOR
		PERFORMANCE DATA									
1/78	A	69.0	89.9		66.3						
	B	22.0	29.8		22.0						
	SYSTEM							744	549		

** PROBLEMS/SOLUTIONS/COMMENTS

PLUGGAGE WAS ENCOUNTERED IN THE MODULE B REHEATER. BECAUSE NO SPARE REHEAT COILS WERE AVAILABLE, THE UTILITY TRIED TAKING SOME COILS FROM MODULE A MODULE B APPEARED TO BE MORE ORE SEVERELY PLUGGED THAN ORIGINALLY THOUGHT.

MODULE A WAS DOWN HALF THE MONTH BECAUSE OF A MAIN STEAM LEAK WHICH COULD NOT BE ISOLATED.

MODULE A OPERATED UNTIL SEPTEMBER 19, WH E A COMBINATION OF MUD AND SCALE BUILD-UP ON THE SUMP FLOOR STRUCTURALLY DAMAGED THE MODULE. REPAIRS PUT THE MODULE OUT OF SERVICE UNTIL MID DECEMBER.

2/78	A	40.9	56.5		34.4						
	B	69.5	92.9		56.5						
	SYSTEM							672	409		

** PROBLEMS/SOLUTIONS/COMMENTS

ON JANUARY 7, THE MODULE B I.D. BOOSTER FAN DISCHARGE DUCT STARTED VIBRATING WILDLY. THIS FORCED THE BOILER OFF WHILE THE SHOP MADE REPAIRS TO THE DUCTWORK AND BALANCED THE FAN WITH AN I.R.D. MACHINE.

WHEN THE UTILITY ATTEMPTED TO PUT MODULE B BACK IN THE GAS PATH, A LEAK IN THE SLURRY LINE FORCED IT BACK OFF.

A PLUGGED VENTURI PUMP FORCED MODULE B OFF THE REST OF THE MONTH.

DURING THE OUTAGE, THE REHEATER COILS WERE CLEANED WITH A HIGH PRESSURE (5000 LB) SPRAYER.

MODULE A WAS FORCED OFF WHEN A STEAM REGULATING VALVE BLEW ITS PACKING.

ON THE 23RD, BOTH MODULES WERE TAKEN OFF AND DRAINED TO ALLOW THE SHOP TO INSTALL NEW ISOLATION VALVES IN THE ABSORBER AND VENTURI PUMPS.

TOWARD THE END OF THE MONTH, SOME PROBLEMS WERE ENCOUNTERED WITH THE POND RETURN PUMPS FREEZING.

3/78	A	93.5	100.0	90.6							
	B	88.5	84.7	76.0	26.2						
	SYSTEM							744	230		

** PROBLEMS/SOLUTIONS/COMMENTS

MODULE A RAN INTO DIFFICULT OPERATIONG CONDITIONS THIS MONTH DUE TO RAPID PLUGGING OF THE REHEAT COILS.

INSPECTION AND SUBSEQUENT CLEANING OF MODULE A UNCOVERED PLUGGED SPRAY NOZZLES AND DEMISTER TRAYS DUE TO NOZZLE INEFFICIENCY.

MODULE B OPERATED VERY WELL AND AN INSPECTION SHOWED THE MODULE TO BE VERY CLEAN.

** PROBLEMS/SOLUTIONS/COMMENTS

THIS MONTH, DUE TO COAL CONSERVATION, UNIT 1 WAS ON THE SYSTEM VERY LITTLE.

MODULE B HAD DIFFICULTY FOR SEVERAL DAYS BECAUSE OF A CRACKED SHEAVE ON THE

COMMONWEALTH EDISON: WILL COUNTY 1 (CONT.)

PERFORMANCE DATA

PERIOD	MODULE	AVAILABILITY	OPERABILITY	RELIABILITY	UTILIZATION	% REMOVAL SO2	% REMOVAL PART.	PER HOURS	BOILER HOURS	FGD HOURS	CAP. FACTOR
			VENTURI PUMP.								
			HIGH PRESSURE CLEANING ON BOTH MODULES DURING THE COAL CONSEPVATION ALONG WITH REMOVING THE VENTURI THROAT RESTRICTOR BLOCKS PROVED BENEFICIAL IN MAINTAINING BETTER CONTROL OF THE DRAFT CONDITIONS IN THE SCRUBBER.							
4/78	A	99.9	99.7		92.0						
	B	100.0	99.9		92.2						
	SYSTEM							720	665		
	** PROBLEMS/SOLUTIONS/COMMENTS										
			THE PRESSURE DIFFERENTIAL ACROSS THE VENTURIS HAS BEEN REDUCED BY APPROXIMATELY 40% AT 140 MW BY REMOVING THE VENTURI RESTRICTOR BLOCKS. PARTICULATE REMOVAL AND SOLIDS CARRYOVER COULD BE ADVERSELY AFFECTED BY THIS ACTION. SINCE PARTICULATE REMOVAL AT THE VENTURI IS A FUNCTION OF WATER DROPLET SIZE, WHICH IN TURN IS A FUNCTION OF PRESSURE DROP. INCREASED SOLIDS CARRYOVER COULD POSSIBLY COMPUND REHEATER PLUGGING PROBLEMS. THE UTILITY IS KEEPING A CLOSE WATCH FOR PLUGGING, BUT HAS NOT YET FOUND ANYTHING UNUSUAL.							
			MODULE A WAS FORCED OUT OF THE GAS PATH ONCE THIS MONTH FOR A VENTURI PIPE LEAK.								
5/78	A	9.5	99.4		55.2						
	B	89.2	100.0		56.1						
	SYSTEM							744	413		
	** PROBLEMS/SOLUTIONS/COMMENTS										
			DURING THE LAST PART OF THE MONTH BOTH MODULES WERE FORCED OUT OF THE GAS PATH DUE TO REHEATER LEAKS. IT REQUIRED A TWO DAY OUTAGE TO REMOVE THE LEAKING REHEATER BUNDLES. ADDITIONAL REHATERS ARE ON ORDER AND ARE EXPECTED TO ARRIVE IN JUNE.							
6/78	A	87.1	94.5		23.7						
	B	85.6	100.0		25.1						
	SYSTEM							720	181		
	** PROBLEMS/SOLUTIONS/COMMENTS										
			DURING A SCRUBBER INSPECTION, 25% DIEMISTER AND 75% ABSORBER SPRAY PLUGGAGE WAS DISCOVERED IN MODULE A. MODULE B WAS NOT AS BAD.								
			HIGH VIBRATION WAS ENCOUNTERED IN THE TURBINE BEARINGS DURING BOILER START UP, CAUSING THE BOILER TO SHUT BACK DOWN.								
			THE PUG MILL FOR CHICAGO ADMIXTURES HAS BEEN APPROVED, AND THE NEW SLUDGE TREATMENT SYSTEM SHOULD BE OPERATING BY FALL.								
			THE SCRUBBER WAS FORCED OUT OF THE GAS PATH ONCE THIS MONTH WHEN THE 1B1 ABSORBER DISCHARGE VALVE FAILED TO OPEN.								
			THE BOILER WAS FORCED OFF THE LAST FOUR DAYS OF THE MONTH FOR CYCLONE LEAKS. DURING THIS OUTAGE, THE A AND B MODULE SPENT SLURRY VALVES WERE REPLACED.								
7/78	A	97.0	100.0		11.6						
	B	99.2	100.0		11.6						
	SYSTEM							744	77		

PERIOD	MODULE	AVAILABILITY	OPERABILITY	RELIABILITY	UTILIZATION	% REMOVAL SO2	% REMOVAL PART.	PER HOURS	BOILER HOURS	FGD HOURS	CAP. FACTOR
8/78	A	97.8	100.0		59.1						
	B	99.6	100.0		59.1						
	SYSTEM							744	440		

** PROBLEMS/SOLUTIONS/COMMENTS

THE BOILER WAS PLAGUED ALL MONTH BY CYCLONE CASING LEAKS. BECAUSE OF THE CYCLONE PROBLEMS AND THE COAL CONSERVATION PROGRAM, THE BOILER WAS ONLY OPERATED SEVENTY-SEVEN HOURS FOR THE MONTH.

THE BOILER DOWN TIME WAS USED FOR PREVENTATIVE MAINTENANCE ON THE SCRUBBER. SIX NEW REHEATERS WERE INSTALLED AND A DRAIN VALVE ON THE SPENT SLURRY LINE WAS REPAIRED.

A VALVE FAILURE ON THE 1A1 ABSORBER PUMP FORCED THE SCRUBBER FROM THE GAS PATH ONCE DURING THE MONTH.

MODULE B EXPERIENCED A LEAKING VENTURI HEADER.

9/78	A	77.7	95.9		55.4						
	B	77.7	96.0		55.5						
	SYSTEM							720	416		

** PROBLEMS/SOLUTIONS/COMMENTS

CHICAGO ADMIXTURES SPENT MOST OF THEIR TIME OPERATING OUT OF THE THICKENER. THE SCRUBBER WASTE MATERIAL WAS TREATED WITH LIME AND FLY ASH AND HAULED OFF TO AN OFF SITE DISPOSAL AREA.

REPAIRS TO THE VENTURI EMERGENCY SPRAY VALVE CAUSED ONE BOILER OUTAGE DURING THE MONTH.

A REHEATER FLANGE LEAK WAS RESPONSIBLE FOR FORCING THE UNIT OFF.

MODULE A WAS FORCED OFF ONCE DUE TO HIGH VIBRATION OF THE I.D. BOOSTER FAN. THE PROBLEM WAS CORRECTED BY REPACKING THE COUPLING ON THE FAN.

** PROBLEMS/SOLUTIONS/COMMENTS

CHICAGO ADMIXTURES SPENT MOST OF THEIR TIME OPERATING OUT OF THE THICKENER. THE SCRUBBER WASTE MATERIAL WAS TREATED WITH LIME AND FLY ASH AND HAULED TO AN OFF SITE DISPOSAL AREA.

REHEATER TUBE LEAKS, ONE IN MODULE A AND FOUR IN MODULE B, CAUSED ONE BOILER OUTAGE AND CAUSED THE FGD SYSTEM TO BE UNAVAILABLE FOR A TOTAL OF NINETY HOURS. SAMPLES OF THE TUBES HAVE BEEN SUBMITTED TO O.A.D. FOR METALLURGICAL EXAMINATION.

A RUPTURED AIR LINE ON A VENTURI PUMP ISOLATION VALVE WOULD NOT ALLOW THE E VALVE TO GO COMPLETELY CLOSED.

WHEN THE A VENTURI PUMP WAS STARTED, A VENTURI SPRAY HOSE RUPTURED.

IT WAS DISCOVERED THAT THE MODULE A VENTURI TANK LEVEL PRESSURE SWITCH WAS NOT WORKING PROPERLY.

THE PUGMILL ORDERED FOR CHICAGO ADMIXTURES HAS ARRIVED ON SITE. IN OCTOBER, THEY WILL FINISH THE CONVERSION, WHICH WILL ALLOW THE MATERIAL SERVICE MIXER TRUCKS TO BE ELIMINATED.

IN OCTOBER, THE THICKENER WILL HAVE TO BE BYPASSED WHILE THE UTILITY DOES MAINTENANCE ON THE RAKE AND REPLACES SOME LEAKING VALVES.

COMMONWEALTH EDISON: WILL COUNTY 1 (CONT.)

PERIOD	MODULE	AVAILABILITY	OPERABILITY	RELIABILITY	UTILIZATION	% REMOVAL SO2	% REMOVAL PART.	PER HOURS	BOILER HOURS	FGD HOURS	CAP. FACTOR
		PERFORMANCE DATA									
10/78	A	100.0	100.0		35.0						
	B	100.0	100.0		35.0						
	SYSTEM							744		261	

** PROBLEMS/SOLUTIONS/COMMENTS

LOW BOILER HOURS WERE DUE TO FOUR OUTAGES CAUSED BY HIGH BEARING METAL TEMPERATURES AND EXCESSIVE VIBRATION IN THE 1-B FORCED DRAFT FAN.

THE BOILER DOWN TIME WAS UTILIZED FOR CLEANING AND REPAIR OF THE VENTURI THROAT, SUMP AND SUMP SCREENS, AND INLET BLOCK DAMPERS OF MODULE A, AS WELL AS THE VENTURI AND ABSORBER TANKS AND SCREENS AND ALL ABSORBER SPRAY NOZZLES OF BOTH MODULES.

ON INSPECTION, IT WAS DISCOVERED THAT THE B MODULE ABSORBER DEPARTMENTAL DAMPER HAD SLIPPED 50% CLOSED. THE DAMPERS WERE JACKED OPEN AND WELDED IN PLACE.

TO CORRECT A HIGH PRESSURE DROP ACROSS THE MODULE B REHEATER, A NEW METHOD WAS EMPLOYED WHEREBY ONLY THE MIDDLE TUBES WERE REMOVED, ALLOWING THE TOP AND BOTTOM TUBES TO BE SEEN AND CLEANED, ELIMINATING THE REMOVAL OF ALL THE TUBES. THIS PROCEDURE CUT OUTAGE TIME FROM ONE OR TWO WEEKS TO TWO DAYS.

11/78	A	96.2	100.0		48.3						
	B	85.2	100.0		48.3						
	SYSTEM							720		348	

** PROBLEMS/SOLUTIONS/COMMENTS

THE UNIT WAS DOWN THREE TIMES THIS MONTH DUE TO A VENTURI PUMP AND TWO BOOSTER FAN OUTAGES.

12/78	A	65.3	100.0		64.5						
	B	64.5	100.0		64.5						
	SYSTEM							744		480	

** PROBLEMS/SOLUTIONS/COMMENTS

REHEATER TUBE LEAKS CAUSED TWO OUTAGES.

THE MODULE B SPENT SLURRY DRAIN WAS REPAIRED.

1/79	A	83.5	100.0		61.3						
	B	62.2	87.1		53.4						
	SYSTEM							744		456	

** PROBLEMS/SOLUTIONS/COMMENTS

THE SO2 PLANT WAS FORCED OFF TWICE THIS MONTH DUE TO REHEATER TUBE LEAKS. TWO TUBES ON MODULE A AND FOUR TUBES ON MODULE B WERE REPLACED.

THE I.D. BOOSTER FAN ON MODULE B WAS FOULED AND HAD TO BE REPLACED.

TWO SPECIAL SECTIONS OF VENTURI PIPING, A SIXTEEN TO EIGHT INCH ECCENTRIC REDUCER AND AN OFFSET TEE WERE PREPARED BY LOCKPORT FABRICATING AND INSTALLED THIS MONTH. THE ORIGINAL REDUCER AND TEE HAD BEEN PATCHED AND WELDED SO MANY TIMES THAT THEY WERE BEYOND REPAIR.

2/79	A	93.0	91.3		54.2						
	B	93.0	91.3		54.2						
	SYSTEM							672		399	

PERIOD	MODULE	AVAILABILITY	OPERABILITY	RELIABILITY	UTILIZATION	% REMOVAL SO2	% REMOVAL PART.	PEP HOURS	BOILER HOURS	FGD HOURS	CAP. FACTOR
		PERFORMANCE DATA									
	** PROBLEMS/SOLUTIONS/COMMENTS										
			THE UNIT WAS FORCED OFF ONCE FOR A MAIN STEAM HEADER LEAK.								
3/79	A	100.0	100.0		46.0						
	B	68.6	100.0		46.0						
	SYSTEM							744	343		
	** PROBLEMS/SOLUTIONS/COMMENTS										
			THE SYSTEM WAS FORCED OUT TWICE IN FEBRUARY AND FOUR TIMES IN MARCH DUE TO A VENTURI HEADER LEAK. A TEN FOOT SECTION OF PIPE WILL HAVE TO BE REPLACED DUE TO EXTENSIVE CORROSION.									E
			THE SYSTEM WAS DOWN ONCE FOR A SPRAY HEADER LEAK.								
			MODULE B EXPERIENCED A LEAK IN THE VENTURI DOWNCOMER. A FIVE FOOT SECTION OF THE PIPE WILL HAVE TO BE REPLACED.								
4/79	A										
	SYSTEM							720			
5/79	A				.0						
	B				.0						
	SYSTEM							744	0		
	** PROBLEMS/SOLUTIONS/COMMENTS										
			UNIT 1 WAS OUT OF SERVICE THE ENTIRE MONTH DUE TO A BOILER OVERHAUL.								
			CHICAGO ADMIXTURES WILL STOCKPILE THE FIXED SLUDGE ON STATION PROPERTY.								
6/79	SYSTEM							720	0		
7/79	SYSTEM							744	0		
8/79	SYSTEM							744	0		
	** PROBLEMS/SOLUTIONS/COMMENTS										
			UNIT 1 WAS OUT OF SERVICE TO REPLACE THE AIR HEATER TUBES, TUBE SHEET AND HOPPERS. DURING THIS OUTAGE, THE WORN VENTURI SPRAY NOZZLES AND DEMISTERS WERE REPLACED. WELDING LEAKS AND GENERAL CLEANING OF THE SO2 INTERNALS WAS ALSO DONE AT THIS TIME.								
			THE BOILER AND THE SCRUBBER ARE SCHEDULED TO RETURN TO SERVICE OCTOBER 1, 1979.								
9/79	SYSTEM							720	0		
10/79	SYSTEM							744	0		
11/79	A	53.3	100.0		85.4						
	B	53.3	100.0		85.4						
	SYSTEM	53.3	100.0		85.4			720	336	336	
	** PROBLEMS/SOLUTIONS/COMMENTS										
			ON NOVEMBER 5, UNIT 1 RETURNED TO SERVICE AFTER A SIX MONTH OUTAGE TO REPLACE THE AIR HEATER TUBES, TUBE SHEET AND HOPPERS.								
			DURING THE OUTAGE, SEVERAL LENGTHS OF VENTURI PIPING HAD TO BE REPLACED WITH NEW RUBBER LINED PIPE.								

COMMONWEALTH EDISON: WILL COUNTY 1 (CONT.)

PERIOD	MODULE	AVAILABILITY	OPERABILITY	RELIABILITY	UTILIZATION	% REMOVAL SO2	% REMOVAL PART.	PER HOURS	BOILER HOURS	FGD HOURS	CAP. FACTOR
			PERFORMANCE DATA								
			THE UNIT DID NOT FORCE THE BOILER OFF AT ANY TIME DURING NOVEMBER.								
12/79	A	77.0	99.5		57.5						
	B	84.9	100.0		57.8						
	SYSTEM	77.0	99.5		57.5			744	431	428	

** PROBLEMS/SOLUTIONS/COMMENTS

ON DECEMBER 4, UNIT 1 CAME OFF LINE SO THAT THE AIR HEATER HOPPEPS AND PRECIPITATOR HOPPERS COULD BE EMPTIED OF CARBON CARRY-OVER AND DEBRIS. DURING THIS OUTAGE THE SHOP REPAIRED A LEAK IN THE POND RETURN LINE.

ON DECEMBER 10, THE A-MODULE DEVELOPED A SERIOUS STEAM LEAK (25,000 MAKE-UP) IN A LOWER REHEAT BUNDLE. THE LEAKING BUNDLE HAD TO BE REMOVED AND REPLACED. THIS RESULTED IN A TWO DAY FORCED OUTAGE. LATER IN THE MONTH THE A-MODULE BLEW ANOTHER REHEATER TUBE FORCING THE BOILER OFF FOR AN ADDITIONAL 25 HOURS AND 12 MINUTES.

THE A-MODULE WAS REMOVED FROM THE GAS PATH ON DECEMBER 29, FOR THREE HOURS TO ALLOW THE MAINTENANCE SHOP TO WELD A LEAKING REHEATER FLANGE.

THE SO2 PLANT FORCED THE BOILER OFF TWICE THIS MONTH. TOTAL FORCED OUTAGE TIME ATTRIBUTED TO THE SCRUBBER WAS 54 HOURS AND 39 MINUTES.

1/80	A	91.0	87.5		63.0						
	B	88.6	84.1		60.6						
	SYSTEM	88.6	84.1		60.6			744	536	451	

** PROBLEMS/SOLUTIONS/COMMENTS

THE FIRST SIX DAYS OF JANUARY, UNIT 1 BOILER WAS OFF THE SYSTEM BECAUSE OF A SLAG SCREEN TUBE LEAK. THE UNIT RETURNED TO SERVICE ON JANUARY 7.

ON JANUARY 16, THE UTILITY HAD TO DEPATE UNIT 1 TO 50 MW BECAUSE THE RE-HEATER SECTIONS ON A AND B MODULES WERE PLUGGING. ON JANUARY 17, THE MODULES WERE TAKEN OUT OF THE GAS PATH TO BEGIN REMOVING AND CLEANING THE REHEATER SECTIONS WITH A HIGH PRESSURE (4000 PSI) WATER SPRAY. UNIT 1 BOILER WAS LEFT ON TO PROVIDE STABILITY FOR THE 138 KV SYSTEM.

IN THE PAST, ALL 42 BUNDLES CONSISTING OF SEVEN TUBES PER BUNDLE, HAD TO BE TAKEN OUTSIDE TO BE CLEANED ON A CONCRETE SLAB. IN THIS CASE SINCE TIME WAS THE MOST IMPORTANT FACTOR, A DIFFERENT APPROACH WAS USED. ONLY THE MIDDLE SIX BUNDLES ON EACH MODULE WERE REMOVED. THIS PROVIDED A LARGE ENOUGH SPACE SO THAT A LANCE WITH AN EXTENSION ON IT COULD BE USED TO CLEAN THE BOTTOM OF THE TWO TOP BUNDLES AND THE TOP OF THE TWO BOTTOM BUNDLES. THERE ARE DOORS THAT ALLOW EASY ACCESS TO THE TOP AND BOTTOM OF THE REHEATER. USING THIS METHOD, ONLY 12 OR THE 42 BUNDLES WERE REMOVED. IN THE PAST, THIS JOB HAS TAKEN AS LONG AS TWO WEEKS TO COMPLETE. USING THE NEW METHOD, ALL THE REHEATER BUNDLES WERE CLEANED IN 20 HOURS.

THE B-MODULE WAS FORCED OFF LINE ON TWO OTHER OCCASIONS IN JANUARY. BOTH THESE OUTAGES WERE CAUSED BY THE REHEATER (A COIL LEAK AND A FLANGE LEAK) TOTALING 18 HOURS AND 24 MINUTES.

2/80	A	79.7	90.5		79.7						
	B	78.6	89.2		78.6						
	SYSTEM	74.1	84.2		74.1			696	613	516	

** PROBLEMS/SOLUTIONS/COMMENTS

SCRUBBER PROBLEMS IN FEBRUARY WERE CAUSED FROM LEAKS IN THE VENTURI SPRAY HEADER. THESE LEAKS DEVELOP WHERE THE RUBBER LINING INSIDE THE VENTURI PIPING HAS WORN AWAY SO THAT THE BARE METAL IS EXPOSED. THIS EXPOSED METAL

PERIOD	MODULE	AVAILABILITY	OPERABILITY	RELIABILITY	UTILIZATION	% REMOVAL SO2	% REMOVAL PART.	PER HOURS	BOILER HOURS	FGD HOURS	CAP. FACTOR

IS THEN SUBJECT TO EROSION/CORROSION. THE LINING IS MOST LIKELY TO WEAR AT THE WELD HEAD OF THE SPRAY NOZZLE TO THE MAIN HEADER. ALL THE VENTURI SPRAY PIPING IS BEING REPLACED.

TUBE LEAKS IN THE STEAM COIL REHEAT SYSTEM CAUSED SCRUBBER PROBLEMS THIS MONTH. MODULE A WAS FORCED OUT ONCE AND MODULE B WAS FORCED OUT THREE TIMES. THESE TUBES WILL BE REPLACED DURING THE NEXT OUTAGE.

3/80	A	83.9			.0						
	A	83.9			.0						
	SYSTEM	83.9			.0			744	0	0	

** PROBLEMS/SOLUTIONS/COMMENTS

THE BOILER WAS OUT OF SERVICE FOR ALL OF MARCH DUE TO BOILER TUBE LEAKS IN THE REHEAT SECTION OF THE BOILER.

4/80	A	100.0		71.0	17.3						
	B	87.7		71.0	17.3						
	SYSTEM	93.9		71.4	17.3			720	175	125	

** PROBLEMS/SOLUTIONS/COMMENTS

DURING THE FIRST 15 DAYS OF APRIL THE BOILER WAS OUT OF SERVICE DUE TO TUBE LEAKS IN THE AIR PREHEATER.

WHEN ATTEMPTS WERE MADE TO BRING THE BOILER ON LINE ON THE 16 THE B-MODULE OF THE SO2 SYSTEM DEVELOPED REHEATER TUBE LEAKS. THIS CAUSED A FORCED OUTAGE OF 53 HOURS AND 40 MINUTES.

WHEN ATTEMPTS WERE MADE TO RETURN THE BOILER TO SERVICE AGAIN, THE AUXILIARY LOW PRESSURE GOVENOR DEVELOPED AN OIL LEAK CAUSING A FOUR DAY OUTAGE, FOLLOWED BY ANOTHER REHEATER TUBE LEAK OUTAGE ON THE B MODULE. THIS OUTAGE LASTED 35 HOURS. THE UNIT RETURNED TO SERVICE ON APRIL 24 AND WAS AVAILABLE FOR THE REST OF APRIL.

5/80	SYSTEM							744			

** PROBLEMS/SOLUTIONS/COMMENTS

INFORMATION WAS NOT AVAILABLE FOR THE MONTH OF MAY.

6/80	A	86.5		100.0	81.2						
	B	86.5		100.0	81.2						
	SYSTEM	86.5		100.0	81.2			720	584	584	

** PROBLEMS/SOLUTIONS/COMMENTS

THE SCRUBBING SYSTEM FORCED THE BOILER OUT OF SERVICE FROM JUNE 6 TO JUNE 10. THE OUTAGE WAS CAUSED BY PLUGGED REHEATERS ON BOTH MODULES. THIS WAS THE ONLY FORCED OUTAGE EXPERIENCED DURING JUNE.

7/80	A	87.8		78.3	55.0						
	B	87.8		78.3	55.0						
	SYSTEM	87.8		78.3	55.0			744	522	409	

** PROBLEMS/SOLUTIONS/COMMENTS

DURING THE MONTH OF JULY THERE WERE NO FORCED SCRUBBER OUTAGES.

TWO SLAG LINE OUTAGES, ONE FORCED DRAFT FAN AND ONE BOILER SCREEN WALL TUBE OUTAGE OCCURRED. THIS ACCOUNTED FOR 193 HOURS OF BOILER-RELATED OUTAGE TIME DURING THE MONTH.

COMMONWEALTH EDISON: WILL COUNTY 1 (CONT.)

PERIOD	MODULE	AVAILABILITY	OPERABILITY	RELIABILITY	UTILIZATION	% REMOVAL SO2	% REMOVAL PART.	PER HOURS	BOILER HOURS	FGD HOURS	CAP. FACTOR
				PERFORMANCE DATA							

ON NINE OCCASIONS IN JULY THE SCRUBBER WAS BY-PASSED SO THAT THE BOILER COULD CARRY MAXIMUM LOAD (163 MW). THE UNIT WAS LIMITED TO 135 MW AFTER A RECENT STACK EMISSION TEST.

8/80	SYSTEM							744			
9/80	SYSTEM							720			

** PROBLEMS/SOLUTIONS/COMMENTS

NO INFORMATION WAS AVAILABLE FOR THE MONTHS OF AUGUST AND SEPTEMBER.

10/80	A	69.9	100.0		60.9						
	B	69.9	100.0		60.9						
	SYSTEM	69.9	100.0		60.9			744	453	453	

** PROBLEMS/SOLUTIONS/COMMENTS

DURING OCTOBER THERE WAS ONE FORCED OUTAGE DUE TO PROBLEMS WITH THE ABSORBER RECIRCULATION PUMP ON MODULE B. DURING THIS OUTAGE THE WALL WASH HEADERS WERE REPLACED ON BOTH MODULES.

DURING OCTOBER THE BOILER WAS SHUT DOWN TWICE DUE TO A LACK OF DEMAND. THIS ACCOUNTED FOR APPROXIMATELY 51 HOURS OF DOWN TIME. ADDITIONAL UNIT OUTAGE TIME WAS DUE TO INTERCEPT VALVE AND AIR HEATER PROBLEMS.

11/80	A	92.4	100.0	83.4	33.0						
	B	92.4	100.0	83.4	33.0						
	SYSTEM	92.4	100.0	83.4	33.0			720	238	238	

** PROBLEMS/SOLUTIONS/COMMENTS

THE UTILITY REPORTED THAT NO MAJOR PROBLEMS WITH THE SCRUBBING SYSTEM WERE ENCOUNTERED DURING NOVEMBER.

12/80	A	77.9	100.0	31.5	31.5						
	B	77.9	100.0	31.5	31.5						
	SYSTEM	77.9	100.0	31.5	31.5			744	234	234	20.3

** PROBLEMS/SOLUTIONS/COMMENTS

DURING DECEMBER AVAILABILITY OF THE FGD SYSTEM WAS LOW DUE TO PLUGGED VENTURI NOZZLES AND HEADER, WHICH HAD TO BE HIGH-PRESSURE JETTED.

1/81	A	82.4	100.0	80.8	80.8						
	B	82.4	100.0	80.8	80.8						
	SYSTEM	82.4	100.0	80.8	80.8	80.00		744	601	601	

** PROBLEMS/SOLUTIONS/COMMENTS

DURING JANUARY THE MIST ELIMINATOR TRAY WAS REPLACED ON MODULE A.

2/81	A	75.4	100.0	68.9	68.9						
	B	75.4	100.0	68.9	68.9						
	SYSTEM	75.4	100.0	68.9	68.9	80.00		672	463	463	59.3

** PROBLEMS/SOLUTIONS/COMMENTS

DURING FEBRUARY THE BOILER WAS OUT OF SERVICE APPROXIMATELY 209 HOURS DUE TO TUBE LEAKS.

THE SCRUBBING SYSTEM WAS OUT OF SERVICE 164 HOURS DUE TO CLEANING AND A TWO HOUR INSPECTION.

EPA UTILITY FGD SURVEY: OCTOBER - DECEMBER 1981

COMMONWEALTH EDISON: WILL COUNTY 1 (CONT.)

PERFORMANCE DATA

PERIOD	MODULE	AVAILABILITY	OPERABILITY	RELIABILITY	UTILIZATION	% REMOVAL SO2	% REMOVAL PART.	PER HOURS	BOILER HOURS	FGD HOURS	CAP. FACTOR
3/81	A	70.2	100.0	68.2	68.2						
	B	70.2	100.0	68.2	68.2						
	SYSTEM	70.2	100.0	68.2	68.2	80.00		744	507	507	63.1

** PROBLEMS/SOLUTIONS/COMMENTS

DURING MARCH DOWNTIME OCCURRED DUE TO MISCELLANEOUS CLEANING TO THE BOILER AND THE SCRUBBER.

4/81	A	32.9	100.0	32.9	32.9						
	B	32.9	100.0	32.9	32.9						
	SYSTEM	32.9	100.0	32.9	32.9			720	237	237	30.1

** PROBLEMS/SOLUTIONS/COMMENTS

DURING MAY THE SCRUBBING MODULES AND THE SCRUBBER PIPING WERE CLEANED. THIS ACCOUNTED FOR THE OUTAGE TIME DURING THE MONTH.

5/81	A	59.1	100.0	51.0	48.1						
	B	59.1	100.0	51.0	48.1						
	SYSTEM	59.1	100.0	51.0	48.1	80.00		744	358	358	42.7

** PROBLEMS/SOLUTIONS/COMMENTS

DURING MAY THE BOILER WAS DOWN FOR 11 DAYS FOR A SCHEDULED OUTAGE.

IN MAY 41 HOURS OF OUTAGE TIME WAS DUE TO A LACK OF DEMAND.

LEAKS IN THE CYCLONE TUBES CAUSED THE SYSTEM TO SHUT DOWN FOR 53 HOURS.

TOWARD THE END OF MAY, THE SYSTEM WAS SHUTDOWN FOR 30 HOURS TO PREPARE FOR AN EMISSION TEST.

6/81	A	100.0	100.0	100.0	63.7						
	B	100.0	100.0	100.0	63.7						
	SYSTEM	100.0	100.0	100.0	63.7			720	458	458	49.4

** PROBLEMS/SOLUTIONS/COMMENTS

DURING JUNE NO MAJOR PROBLEMS WERE ENCOUNTERED.

SECTION 14
DESIGN AND PERFORMANCE DATA FOR OPERATIONAL PARTICLE SCRUBBERS

COMPANY NAME	DETROIT EDISON	
PLANT NAME	ST. CLAIR	
UNIT NUMBER	6	
CITY	BELLE RIVER	
STATE	MICHIGAN	
REGULATORY CLASSIFICATION	C	
PARTICULATE EMISSION LIMITATION - NG/J	86.	(.200 LB/MMBTU)
SO2 EMISSION LIMITATION - NG/J	1376.	(3.200 LB/MMBTU)
NOX EMISSION LIMITATION - NG/J	******	(****** LB/MMBTU)
NET PLANT GENERATING CAPACITY - MW	1798	
GROSS UNIT GENERATING CAPACITY - MW	260	
NET UNIT GENERATING CAPACITY W/FGD - MW	*****	
NET UNIT GENERATING CAPACITY WO/FGD - MW	*****	
EQUIVALENT SCRUBBED CAPACITY - MW	163	
** UNIT DATA - BOILER AND STACK		
BOILER SUPPLIER	COMBUSTION ENGINEERING	
BOILER TYPE	******	
BOILER SERVICE LOAD	PEAK	
DESIGN BOILER FLUE GAS FLOW - CU.M/S	465.77	(987000 ACFM)
BOILER FLUE GAS TEMPERATURE - C	132.2	(270 F)
STACK HEIGHT - M	130.	(425 FT)
STACK SHELL	******	
STACK TOP DIAMETER - M	*******	(***** FT)
** FUEL DATA		
FUEL TYPE	COAL	
FUEL GRADE	SUBBITUMINOUS	
AVERAGE HEAT CONTENT - J/G	22330.	(9600 BTU/LB)
RANGE HEAT CONTENT - BTU/LB		9500-9600
AVERAGE ASH CONTENT - %	4.00	
RANGE ASH CONTENT - %	3.0-4.0	
AVERAGE MOISTURE CONTENT - %	22.60	
RANGE MOISTURE CONTENT - %	22.0-24.0	
AVERAGE SULFUR CONTENT - %	.35	
RANGE SULFUR CONTENT - %	0.3-0.4	
AVERAGE CHLORIDE CONTENT - %	********	
RANGE CHLORIDE CONTENT - %	******	
*** PARTICLE CONTROL		
** MECHANICAL COLLECTOR		
NUMBER	0	
TYPE	NONE	
** FABRIC FILTER		
NUMBER	0	
TYPE	NONE	
** ESP		
NUMBER	2	
SUPPLIER	WHEELABRATOR-FRYE	
PARTICLE REMOVAL EFFICENCY - %	90.0	
** PARTICLE SCRUBBER		
NUMBER	2	
INITIAL START-UP DATE	9/75	
GENERIC TYPE	VENTURI TOWER	
SPECIFIC TYPE	VARIABLE-THROAT/ADJUSTABLE DRUM	
TRADE NAME/COMMON NAME	RADIAL FLOW VENTURI	
SUPPLIER	PEABODY-LURGI	
SHELL GENERIC MATERIAL	STAINLESS STEEL	
SHELL SPECIFIC MATERIAL	AUSTENITIC	
LINER GENERIC MATERIAL	ORGANIC	
LINER SPECIFIC MATERIAL	RUBBER	
GAS CONTACTING DEVICE TYPE	NONE	
LIQUID RECIPCULATION RATE - LITER/S	278.5	(4420 GPM)
L/G RATIO - LITER/CU.M	2.7	(20.0 GAL/1000ACF)
PH CONTROL ADDITIVE	LIMESTONE	

DETROIT EDISON: ST. CLAIR 6 (CONT.)

PRESSURE DROP - KPA	3.5	(14.0 IN-H2O)
SUPERFICIAL GAS VELOCITY - M/S	28.3	(93.0 FT/S)
INLET GAS FLOW RATE - CU.M/S	116.6	(247000 ACFM)
INLET GAS TEMPERATURE - C	132.2	(270 F)

PERFORMANCE DATA

PERIOD	MODULE	AVAILABILITY	OPERABILITY	RELIABILITY	UTILIZATION	% REMOVAL SO2	% REMOVAL PART.	PER HOURS	BOILER HOURS	FGD HOURS	CAP. FACTOR
11/74	SYSTEM							720			
12/74	SYSTEM							744			
1/75	SYSTEM							744			

** PROBLEMS/SOLUTIONS/COMMENTS

INSTALLATION OF THE FGD SYSTEM WAS ESSENTIALLY COMPLETED BY THE NOVEMBER, 1974 THROUGH JANUARY 1975 PERIOD.

A FAULTY INSTRUMENT PANEL WHICH WAS INCORRECTLY WIRED HAS BEEN RETURNED TO THE MANUFACTURER FOR REPAIR.

TO DATE, THE UTILITY HAS WATER TESTED ALL THE AUXILIARY EQUIPMENT. THE ID FAN HAS BEEN TESTED AND AIR BALANCE HAS BEEN CHECKED.

2/75	SYSTEM							672			
3/75	SYSTEM							744			
4/75	SYSTEM							720			

** PROBLEMS/SOLUTIONS/COMMENTS

A COLD FLUE GAS RUN WAS SUCCESSFULLY CONDUCTED MARCH 22 AND 23. DURING THIS PERIOD THE RUBBER-LINED PUMPS WERE REPAIRED AND THE LIMESTONE PREARATION SYSTEM WAS CALIBRATED.

5/75	SYSTEM							744			
6/75	SYSTEM							720			
7/75	SYSTEM							744			

** PROBLEMS/SOLUTIONS/COMMENTS

THE FIRST HOT FLUE GAS RUN WAS CONDUCTED ON JUNE 22, 1975. THE RUN LASTED FOR A PERIOD OF 22 HOURS. DURING THIS RUN, THE SCRUBBER WAS PURPOSELY TRIPPED OFF AT LOADS OF 40 AND 80 PERCENT. THIS WAS PERFORMED TO OBSERVE IF ANY DETRIMENTAL EFFECTS TO THE STEAM GENERATION OPERATIONS RESULTED. NONE WERE DETECTED. THE SYSTEM WAS TAKEN OUT OF SERVICE FOLLOWING THIS GAS RUN TO CORRECT THE FOLLOWING MAJOR OPERATION AREAS:

GAS CIRCUIT: LUGI THROAT POSITIONAL FAILURE; DETERIORATION OF THE DAMPER SEALS; SEVERE VIBRATIONS; SO2 ANALYZERS INOPERATIVE.
LIQUID CIRCUIT: FAILURE OF PH CONTROL SYSTEM; TARGET FLOW METER TARGETS HAVE BEEN BROKEN OFF; PUMP SEAL WATER LOW FLOW ALARM TRIPS.

8/75	SYSTEM							744			
9/75	SYSTEM							720			

** PROBLEMS/SOLUTIONS/COMMENTS

A SECOND HOT FLUE GAS RUN WAS INITIATED ON AUGUST 6 AND LASTED 27 HOURS. THE RUN WAS TERMINATED BECAUSE OF A REHEATER THERMOCOUPLE FAILURE. A SUBSEQUENT INSPECTION OF THE SCRUBBING SYSTEM REVEALED NO APPARENT ABNORMALITIES OR MALFUNCTIONS.

DETROIT EDISON: ST. CLAIR 6 (CONT.)

PERIOD	MODULE AVAILABILITY	OPERABILITY RELIABILITY	UTILIZATION	% REMOVAL SO2	% REMOVAL PART.	PER HOURS	BOILER HOURS	FGD HOURS	CAP. FACTOR
			A THIRD HOT FLUE GAS RUN OF 41 HOURS DURATION WAS COMPLETED OCTOBER 9. THE MAIN OBJECTIVE OF THIS RUN WAS TO EVALUATE VARIOUS COMPONENTS OF THE FRESH WATER SPRAY SYSTEM AND EFFECTS ON SYSTEM OPERATION. THE TEST RUN WAS PREMATURELY TERMINATED BECAUSE OF A BOILER FEED PUMP MALFUNCTION, RESULTING IN A REDUCED BOILER LOAD CAUSING SUBSEQUENT WEEPING OF THE WASH TRAY.							
10/75	SYSTEM						744		
11/75	SYSTEM						720		
12/75	SYSTEM						744		
	** PROBLEMS/SOLUTIONS/COMMENTS								
			A FOURTH FLUE GAS RUN OF 23 DAYS DURATION WAS TERMINATED DUE TO EXCESSIVE VIBRATION IN THE I.D. & BOOSTER FAN. ONE OTHER SCRUBBER-RELATED OUTAGE OCCURRED WHEN THE PACKING OF ONE OF THE SCRUBBER RECIRCULATION PUMPS NEEDED MAINTENANCE. SO2 REMOVAL DURING THIS PERIOD WAS 90 PERCENT AND PARTICULATE OUTLET LOADING WAS 0.1 LB/1000 LBS OF FLUE GAS FOR 1-3 PERCENT SULFUR COAL.							
1/76	SYSTEM						744		
2/76	SYSTEM						696		
3/76	SYSTEM						744		
4/76	SYSTEM			100.0	100.0		720		
	** PROBLEMS/SOLUTIONS/COMMENTS								
			THE 30-DAY VENDOR QUALIFICATION RUN AND FINAL ACCEPTANCE TEST WERE COMPLETED BY MAY 29. THE QUALIFICATION RUN WAS CONDUCTED ON A "HANDS OFF" BASIS USING PLANT PERSONNEL EXCLUSIVELY. THE SYSTEM WAS IN SERVICE 100 PERCENT OF THE TIME THE BOILER WAS OPERATIONAL. THE FINAL ACCEPTANCE TEST CONSISTED OF SIX 4-HR. TEST RUNS CONDUCTED IN THE SPACE OF ONE WEEK. THE SO2 REMOVAL EFFICIENCY FOR HIGH SULFUR COAL WAS 90.9 PERCENT. PARTICULATE REMOVAL ALSO EXCEEDED DESIGN LEVELS. NO MAJOR CHEMICAL OR MECHANICAL-RELATED PROBLEMS WERE ENCOUNTERED.							
5/76	SYSTEM						744		
6/76	SYSTEM						720		
7/76	SYSTEM						744		
8/76	SYSTEM						744		
	** PROBLEMS/SOLUTIONS/COMMENTS								
			THE UTILITY IS NOW PREPARING TO CONDUCT A 2 MONTH MINIMUM INTERNAL SCRUBBER DEMONSTRATION PROGRAM TO ACQUIRE OPERATING DATA AND INFORMATION. FOLLOWING THE COMPLETION OF THIS PROGRAM THE BOILERS WILL FIRE LOW SULFUR DECKER COAL (0.3 TO 4.0 PERCENT) TO MEET SO2 EMISSION REGULATIONS. THE SCRUBBERS WILL CONTINUE TO OPERATE IN THE PARTICULATE REMOVAL MODE.							
9/76	SYSTEM						720		
10/76	SYSTEM						744		
	** PROBLEMS/SOLUTIONS/COMMENTS								
			THE INTERNAL SO2 SCRUBBING DEMONSTRATION PROGRAM COMMENCED ON OCTOBER 14. THE SCRUBBERS OPERATED CONTINUOUSLY FOR 10 DAYS.						

PERIOD	MODULE	AVAILABILITY	OPERABILITY	RELIABILITY	UTILIZATION	% REMOVAL SO2	% REMOVAL PART.	PER HOURS	BOILER HOURS	FGD HOURS	CAP. FACTOR

OPERATION ON THE DEMONSTRATION PROGRAM WAS INTERRUPTED BY A FORCED SCRUBBER OUTAGE RESULTING FROM SCALE AND SOLIDS CARRYOVER FROM THE WASH TRAY AND MIST ELIMINATOR TO THE SCRUBBER I.D. BOOSTER FAN ASSEMBLY, CAUSING VIBRATION AND BALANCE PROBLEMS. IT WAS DECIDED TO SANDBLAST THE FAN TO REMOVE SOLIDS BUILDUP ON THE FAN ASSEMBLY.

THE UTILITY PLANS TO MODIFY THE COMPONENT'S WASH SYSTEM FOR GREATER FLOW CAPABILITY AFTER COMPLETION OF THE SO2 SCRUBBING PROGRAM. DECO ALSO PLANS TO CONTINUE PARTICULATE SCRUBBING FOLLOWING THE TERMINATION OF THE SO2 PROGRAM BY UNCOUPLING THE SPRAY TOWERS AND MAINTAINING THE PEABODY-LURGI VENTURI SCRUBBERS IN THE FLUE GAS STREAM. SOME LIMESTONE MAY HAVE TO BE ADDED TO THE PARTICULATE SCRUBBING SOLUTION IN ORDER TO PREVENT LOW PH SWINGS AND MINIMIZE THE POSSIBILITY OF ACID CORROSION DAMAGE TO THE INTERNAL COMPONENTS.

11/76 SYSTEM 80.0 720

** PROBLEMS/SOLUTIONS/COMMENTS

FOLLOWING THE COMPLETION OF SAND BLASTING OPERATIONS TO SCRUBBER'S I.D. BOOSTER FAN FOR REMOVAL OF SOLIDS BUILD UP, OPERATIONS RESUMED ON NOVEMBER 7 AND CONTINUED THROUGHOUT THE MONTH. THE SYSTEM'S AVAILABILITY INDEX FOR THE MONTH WAS 80 PERCENT. THE MAJORITY OF THE OUTAGE TIME WAS CONSUMED PROCURING SAND BLASTING SERVICES. THE OPERATION ITSELF REQUIRED ONLY 8 HOURS.

12/76 SYSTEM 51.0 744

** PROBLEMS/SOLUTIONS/COMMENTS

THE SO2 DEMONSTRATION PROGRAM CONTINUED THROUGHOUT DECEMBER. THE SYSTEM'S AVAILABILITY INDEX FOR THE PERIOD WAS 51 PERCENT.

SCRUBBER OUTAGES RESULTED FROM LIMESTONE FEEDER PROBLEMS.

SCRUBBER OUTAGES RESULTED FROM DENSE SLURRY TRAVERSE PUMP PROBLEMS.

SCRUBBER OUTAGES RESULTED FROM DENSE SLURRY TANK AGITATOR MALFUNCTIONS.

PH SAMPLING LINE PLUGGING RESULTED IN SOME OUTAGE TIME.

1/77 SYSTEM .0 744

2/77 SYSTEM .0 672

** PROBLEMS/SOLUTIONS/COMMENTS

THE SO2 DEMONSTRATION PROGRAM WAS OFFICIALLY TERMINATED ON DEC. 31, 1976. THE SCRUBBER PLANT WAS SHUT DOWN AT THIS POINT AND FLUE GAS WAS BY-PASSED AROUND THE SYSTEM.

3/77 SYSTEM .0 744

** PROBLEMS/SOLUTIONS/COMMENTS

THE BOILER REMAINS IN SERVICE, FIRING LOW SULFUR (0.3%) WESTERN COAL. CURRENT PLANS CALL FOR THE SCRUBBER PLANT TO REMAIN OUT OF SERVICE UNTIL MID-JUNE FOR DESIGN AND OPERATING MODIFICATIONS. RESUMPTION OF SCRUBBER OPERATIONS WILL OCCUR IN THE PRIMARY PARTICULATE-REMOVAL MODE. THE PEABODY-LURGI VENTURI SCRUBBERS AND SPRAY TOWER ABSORBERS WILL REMAIN IN THE GAS STREAM. SOLUTION WILL BE CIRCULATED THROUGH THE VENTURI'S WASH TRAYS, AND MIST ELIMINATORS. NO SOLUTION WILL BE CIRCULATED THROUGH THE SPRAY ZONE OF THE ABSORBER TOWERS. LIMESTONE REAGENT WILL BE ADDED TO THE SCRUBBING SOLUTION IN ORDER TO PREVENT LOW PH SWINGS AND SUBSEQUENT

DETROIT EDISON: ST. CLAIR 6 (CONT.)

PERIOD	MODULE	AVAILABILITY	OPERABILITY	RELIABILITY	UTILIZATION	% REMOVAL SO2	% REMOVAL PART.	PER HOURS	BOILER HOURS	FGD HOURS	CAP. FACTOR

PERFORMANCE DATA

MATERIALS DAMAGE TO THE SCRUBBER'S INTERNALS. SO2 REMOVAL SHOULD RESIDE IN THE 35 TO 50% RANGE IN THIS MODE OF OPERATION BECAUSE OF THE SOLUTION'S ALKALINITY DUE TO THE FLY ASH AND LIMESTONE. ALSO DECO PLANS TO MAINTAIN A HIGHER L/G RATIO IN THE SCRUBBER MODULES. THIS MODE OF OPERATION IS PROJECTED TO CONTINUE FOR A ONE TO THREE YEAR PERIOD FOLLOWING THE MID-JUNE RESTART.

4/77	SYSTEM	.0						720			
5/77	SYSTEM	.0						744			
6/77	SYSTEM	.0						720			
7/77	SYSTEM	.0						744			
8/77	SYSTEM	.0						744			
9/77	SYSTEM	.0						720			
10/77	SYSTEM							744			

** PROBLEMS/SOLUTIONS/COMMENTS

THE UNIT WAS PULLED OFF LINE IN DECEMBER 1976 AND DID NOT RESTART UNTIL OCTOBER 1977. WHILE THE UNIT WAS DOWN THE UTILITY INSTALLED BUILDINGS AROUND PUMPS THAT WERE EXPOSED TO SEVERE WEATHER CONDITIONS.

11/77	SYSTEM							720			
12/77	SYSTEM							744			
1/78	SYSTEM							744			
2/78	SYSTEM	96.0						672			
3/78	SYSTEM	85.6						744			
4/78	SYSTEM	90.0						720			
5/78	SYSTEM	74.6						744			

** PROBLEMS/SOLUTIONS/COMMENTS

THE UNIT EXPERIENCED SPRAY HEADER PROBLEMS IN THE ABSORBER TOWER. SOME BROKEN NOZZLES WERE DISCOVERED.

THERE WERE SOME I.D. BOOSTER FAN PROBLEMS. THE UTILITY MUST SAND BLAST THE FAN EVERY 4 TO 5 WEEKS WHEN THE MAGNITUDE OF VIBRATION OF THE FAN BECOMES EXCESSIVE FROM SCALE FORMATION; HOWEVER, IN THIS INSTANCE THE PROBLEM WAS A RESULT OF A LOW FAN OIL LEVEL.

THE UTILITY NOW OPERATES 3 RECYCLE TANK AGITATORS. PREVIOUSLY ONLY 2 WERE OPERATED. IT WAS FELT THAT PART OF THE TANK PLUGGING WAS A RESULT OF INSUFFICIENT AGITATION.

THE SLURRY SPRAY SURGE TANK ENCOUNTERED CONTINUAL OVERFLOW PROBLEMS WHEN THE ABSORBER SUMP PUMP WAS OPERATING. THIS WAS BELIEVED TO BE A RESULT OF A BROKEN SECTION IN THE SPRAY NOZZLE LINES. SPRAY WAS BEING DIRECTED UPWARD TO THE BOTTOM OF A TRAY INSTEAD OF DOWN, COUNTERCURRENT TO THE GAS FLOW AS INTENDED.

REHEATER PROBLEMS OCCURRED WITH THE FORMATION OF OIL CLINKERS IN THE BURNER AREA. IT WAS DISCOVERED THAT THE AIR SUPPLY TO THE BURNER WAS INSUFFICIENT.

PERIOD	MODULE	AVAILABILITY	OPERABILITY	RELIABILITY	UTILIZATION	% REMOVAL SO2	% REMOVAL PART.	PER HOURS	BOILER HOURS	FGD HOURS	CAP. FACTOR

SOME SPRAY HEADER PROBLEMS WERE ENCOUNTERED. THE FRP PIPING WAS RUPTURING. IT WAS SUSPECTED THAT THE RUPTURES WERE A RESULT OF "WATER HAMMER" I.E. THE SURGE THAT OCCURRS IN THE PIPE WITH A SUDDEN FLOW RATE CHANGE.

THE SPRAY HEADERS WERE PLUGGING. WHEN THE HEADERS ARE DRAINED (E.G. SYSTEMS SHUTDOWN) SOME SLURRY SETTLES IN THE HEADER LINES ETC. RINSE LINES ARE NOW BEING INSTALLED TO FLUSH OUT HEADERS DURING FUTURE SHUTDOWNS.

6/78	SYSTEM	87.9						720			

** PROBLEMS/SOLUTIONS/COMMENTS

ONE OF THE BLADES CAME LOOSE FROM AN I.D. BOOSTER FAN AND PASSED THROUGH THE HOUSING. REPAIRS WERE MADE WITHOUT SERIOUS COMPLICATIONS.

7/78	SYSTEM	96.0						744			

** PROBLEMS/SOLUTIONS/COMMENTS

THE INSTALLATION OF RINSE LINES HAS NOT YET BEEN COMPLETED.

PROBLEMS WITH RUPTURED SPRAY HEADER PIPING CONTINUED. IT HAS BEEN POSSIBLE TO OPERATE THE SCRUBBER WITH THE RUPTURED LINES WITHOUT SERIOUS CONSEQUENCES. IT IS NOT CRUCIAL THAT REPAIRS BE MADE IMMEDIATELY.

8/78	SYSTEM	90.4						744			
9/78	SYSTEM	69.0						720			
10/78	SYSTEM	.0						744			
11/78	SYSTEM	.0						720			
12/78	SYSTEM	.0						744			
1/79	SYSTEM							744			

** PROBLEMS/SOLUTIONS/COMMENTS

DURING THIS PERIOD RECYCLE TANK AGITATORS WERE BREAKING LOOSE AND SIMILAR PROBLEMS WERE ENCOUNTERED WITH THE SLURRY STORAGE TANK AGITATORS. THE SCRUBBING SYSTEM WAS REMOVED FROM SERVICE FROM SEPTEMBER THROUGH JANUARY. STEADY BEARINGS WERE INSTALLED AT THE BOTTOM OF THE RECYCLE TANK SOLVING THE RECYCLE TANK AGITATOR PROBLEM. THE SLURRY STORAGE TANK SYSTEM ALREADY HAD STEADY BEARINGS. THESE WERE REWORKED TO IMPROVE OPERATIONS.

2/79	SYSTEM							672			
3/79	SYSTEM							744			

** PROBLEMS/SOLUTIONS/COMMENTS

SOME REHEATER PROBLEMS OCCURRED.

4/79	SYSTEM							720			
5/79	SYSTEM							744			
6/79	SYSTEM							720			
7/79	SYSTEM							744			
8/79	SYSTEM							744			
9/79	SYSTEM							720			

DETROIT EDISON: ST. CLAIR 6 (CONT.)

PERIOD	MODULE	AVAILABILITY	OPERABILITY	RELIABILITY	UTILIZATION	% REMOVAL SO2	% REMOVAL PART.	PER HOURS	BOILER HOURS	FGD HOURS	CAP. FACTOR
10/79	SYSTEM							744			

** PROBLEMS/SOLUTIONS/COMMENTS

THE SYSTEM IS CURRENTLY DOWN BUT IS EXPECTED TO BE BACK ON LINE SOON. THE SCRUBBING SYSTEM HAS OPERATED ONLY 1 WEEK SINCE MAY 18, 1979 BECAUSE OF SUMP PROBLEMS.
THE AGITATOR BEARING SYSTEM WAS POORLY DESIGNED. THE BEARING SYSTEM HAS NOW BEEN COMPLETELY REDESIGNED. THE AGITATORS HAVE NOW OPERATED 2000 HOURS ON THE NEW BEARINGS. THE UTILITY WILL PROBABLY DRAIN THE TANK AFTER ABOUT 500 MORE HOURS TO INSPECT AND READJUST THE BEARINGS. THE NEW BEARING SYSTEM IS COMPOSED OF STAINLESS STEEL PARTS.
100% OF THE ST. CLAIR FLUE GAS PASSES THROUGH THE ESP. 50% OF THAT FLUE GAS ENTERS THE SCRUBBER. THE UNIT IS REQUIRED TO MEET A 55% OPACITY, HOWEVER, A VARIANCE HAS BEEN GRANTED ALLOWING A 65% OPACITY UNTIL THE SCRUBBER IS AGAIN OPERATIONAL. THE UTILITY IS PREPARING TO INSTALL A NEW ESP WHICH WOULD BE OPERATIONAL IN 2 YEARS. WHEN THE NEW ESP IS INSTALLED THE SCRUBBING SYSTEM AND OLD ESP WILL BE SCRAPPED. THE UNIT WILL THEN BE REQUIRED TO MEET A 20% OPACITY.

11/79	SYSTEM	90.0						720			
12/79	SYSTEM	90.0						744			

** PROBLEMS/SOLUTIONS/COMMENTS

THE UNIT CAME BACK ON LINE AROUND MID-NOVEMBER.

NEW DENVER PUMPS WITH EJECTORS WERE INSTALLED TO ASSIST THE SUMP PUMPS UNTIL THE ESP'S COME ON LINE.

THE ABSORBER PUMPS HAVE BEEN A PROBLEM RESULTING IN A CAPACITY TURNDOWN TO 225 MW (FROM 230 MW).

ONE OF THE COAL MILLS HAS BEEN DOWN CAUSING LIMITED OPERATIONS.

1/80	SYSTEM							744			
2/80	SYSTEM							696			
3/80	SYSTEM							744			

** PROBLEMS/SOLUTIONS/COMMENTS

THE SCRUBBING SYSTEM OPERATED WITH BETTER THAN 80% AVAILABILITY DURING THE FIRST QUARTER OF 1980.

THE SCRUBBER ID FAN FAILED. THE BOLTS HOLDING PART OF THE SHROUDING IN PLACE SHEERED CAUSING THE PLATE TO FALL ONTO THE SHAFT.

BECAUSE OF ADDITIONAL PROBLEMS WITH THE A-S-H SUMP PUMPS, THE DENVER PUMPS INSTALLED TO ASSIST THE A-S-H PUMPS NOW CARRY THE ENTIRE LOAD. THE A-S-H PUMPS DRIVES HAVE BEEN DISCONNECTED. THE SLURRY CIRCULATES THROUGH THE THE NON-OPERATING A-S-H PUMPS TO THE DENVER PUMPS.

THE CONTINUAL PROBLEMS WITH THE LOUVER BY PASS DAMPERS WAS SOLVED BY DISCONNECTING THE EXTREME LOUVER AT EITHER END. THE DAMPERS OPERATE NOW WITH 12 OF THE 14 LOUVERS. THE UTILITY IS PLEASED WITH RECENT DAMPER OPERATIONS.

SOME RECENT SCRUBBER OUTAGES RESULTED FROM THE OCCASIONAL UNAVAILABILITY OF LIMESTONE.

4/80	SYSTEM							720			

PERIOD	MODULE	AVAILABILITY	OPERABILITY	RELIABILITY	UTILIZATION	% REMOVAL SO2	% REMOVAL PART.	PER HOURS	BOILER HOURS	FGD HOURS	CAP. FACTOR
	** PROBLEMS/SOLUTIONS/COMMENTS										
	THE SCRUBBER WAS OUT OF SERVICE THROUGH APRIL WHILE REPAIRS CONTINUED ON THE SCRUBBER ID FAN HOUSING. BECAUSE BOILER OPERATED AT LOW LOAD THE SCRUBBER SERVICES WERE NOT REQUIRED IN APRIL.										
5/80	SYSTEM							744			
	** PROBLEMS/SOLUTIONS/COMMENTS										
	THE SCRUBBER WAS OUT OF SERVICE UNTIL MAY 21 WHEN THE FAN HOUSING REPAIR WAS COMPLETED. THE SCRUBBER WAS SHUT DOWN AGAIN ON MAY 25 WITH A SCRUBBER ID FAN BEARING FAILURE.										
6/80	SYSTEM							720			
	** PROBLEMS/SOLUTIONS/COMMENTS										
	THE SCRUBBER WAS NOT OPERATED THROUGH JUNE BECAUSE PARTS FOR THE SCRUBBER ID FAN HAD NOT ARRIVED AT THE PLANT. SCRUBBER SERVICE WAS NOT REQUIRED BECAUSE OF LOW BOILER LOAD.										
	SCRUBBER REPAIRS AT ST. CLAIR HAVE REQUIRED A GREAT DEAL OF OUTAGE TIME BECAUSE THE UTILITY DOES NOT STOCK A GREAT DEAL OF PARTS FOR THE SCRUBBER. THE ST CLAIR 6 SCRUBBER IS SCHEDULED TO BE PERMANENTLY REMOVED FROM SERVICE IN SEPTEMBER 1981 WHEN THE NEW 100% CAPACITY ESP FACILITY CURRENTLY UNDER CONSTRUCTION IS COMPLETE. AT PRESENT 50% OF THE FLUE GAS IS SCRUBBED AND 50% PASSES THROUGH THE ESP. DURING LOW LOAD PERIODS EITHER THE SCRUBBER OR ESP CAN BE SHUT DOWN.										
7/80	SYSTEM							744			
8/80	SYSTEM							744			
9/80	SYSTEM							720			
	** PROBLEMS/SOLUTIONS/COMMENTS										
	THE SCRUBBING SYSTEM DID NOT OPERATE DURING THE JULY THROUGH SEPTEMBER PERIOD. THE UTILITY IS POSTPONING NECESSARY REPAIRS ON THE BOOSTER FAN AND SOME MINOR SCRUBBER INTERNAL REPAIRS UNTIL THE NEXT UNIT OUTAGE.										
10/80	SYSTEM							744			
11/80	SYSTEM							720			
12/80	SYSTEM							744			
	** PROBLEMS/SOLUTIONS/COMMENTS										
	THE BOOSTER FAN WAS REPAIRED DURING THE OCTOBER THROUGH DECEMBER PERIOD. HOWEVER, THE RECIRCULATION TANK AGITATORS ARE UNAVAILABLE AND REQUIRE REPAIRS. THE UTILITY IS PRESENTLY DECIDING WHETHER THE SCRUBBING SYSTEM REPAIRS WILL BE MADE DURING THE NEXT SCHEDULED OUTAGE IN SEPTEMBER 1981 OR BE DECOMMISSIONED.										
1/81	SYSTEM		.0		.0			744		0	
2/81	SYSTEM		.0		.0			744		0	

DETROIT EDISON: ST. CLAIR 6 (CONT.)

PERIOD	MODULE	AVAILABILITY	OPERABILITY	RELIABILITY	UTILIZATION	% REMOVAL SO2	% REMOVAL PART.	PER HOURS	BOILER HOURS	FGD HOURS	CAP. FACTOR
		PERFORMANCE DATA									

** PROBLEMS/SOLUTIONS/COMMENTS

THE SCRUBBER DID NOT OPERATE DURING JANUARY, FEBRUARY OR MARCH. DURING THIS TIME WORK WAS CONTINUING ON THE AGITATORS. THE STATOR BEARINGS WERE MALFUNCTIONING CHRONICALLY. THE BEARINGS HAVE NOW BEEN REMOVED. THE AGITATOR IS NOW COMPLETELY FREE STANDING AND THE SHAFT HAS BEEN SHORTENED.

GENERAL MAINTENANCE WAS PERFORMED ON THE SCRUBBER DURING THE LAST TWO WEEKS OF MARCH. WORK IS TO CONTINUE THROUGH THE FIRST HALF OF APRIL. THE SCRUBBING SYSTEM IS SCHEDULED FOR DECOMMISSIONING DURING THE FIRST WEEK OF SEPTEMBER 1981.

2/81	SYSTEM	.0				.0			672		0

SECTION 14
DESIGN AND PERFORMANCE DATA FOR OPERATIONAL PARTICLE SCRUBBERS

COMPANY NAME	MINNESOTA POWER & LIGHT	
PLANT NAME	CLAY BOSWELL	
UNIT NUMBER	3	
CITY	COHASSET	
STATE	MINNESOTA	
REGULATORY CLASSIFICATION	E	
PARTICULATE EMISSION LIMITATION - NG/J	258.	(.600 LB/MMBTU)
SO2 EMISSION LIMITATION - NG/J	1720.	(4.000 LB/MMBTU)
NOX EMISSION LIMITATION - NG/J	******	(****** LB/MMBTU)
NET PLANT GENERATING CAPACITY - MW	1000	
GROSS UNIT GENERATING CAPACITY - MW	364	
NET UNIT GENERATING CAPACITY W/FGD - MW	347	
NET UNIT GENERATING CAPACITY WO/FGD - MW	350	
EQUIVALENT SCRUBBED CAPACITY - MW	350	
** UNIT DATA - BOILER AND STACK		
BOILER SUPPLIER	COMBUSTION ENGINEERING	
BOILER TYPE	PULVERIZED COAL	
BOILER SERVICE LOAD	BASE	
DESIGN BOILER FLUE GAS FLOW - CU.M/S	613.47	(1300000 ACFM)
BOILER FLUE GAS TEMPERATURE - C	123.3	(254 F)
STACK HEIGHT - M	213.	(700 FT)
STACK SHELL	CONCRETE	
STACK TOP DIAMETER - M	7.9	(26.0 FT)
** FUEL DATA		
FUEL TYPE	COAL	
FUEL GRADE	SUBBITUMINOUS	
AVERAGE HEAT CONTENT - J/G	19538.	(8400 BTU/LB)
RANGE HEAT CONTENT - BTU/LB		7500-9900
AVERAGE ASH CONTENT - %	9.00	
RANGE ASH CONTENT - %	4.8-16.0	
AVERAGE MOISTURE CONTENT - %	26.00	
RANGE MOISTURE CONTENT - %	24.0-28.0	
AVERAGE SULFUR CONTENT - %	.92	
RANGE SULFUR CONTENT - %	0.5-1.5	
AVERAGE CHLORIDE CONTENT - %	.01	
RANGE CHLORIDE CONTENT - %	0.00-0.07	
*** PARTICLE CONTROL		
** MECHANICAL COLLECTOR		
NUMBER	0	
** FABRIC FILTER		
NUMBER	0	
TYPE	NONE	
** ESP		
NUMBER	0	
** PARTICLE SCRUBBER		
NUMBER	1	
INITIAL START-UP DATE	5/73	
GENERIC TYPE	IMPINGEMENT TOWER	
SPECIFIC TYPE	NR	
TRADE NAME/COMMON NAME	NR	
SUPPLIER	KREBS ENGINEERS	
DIMENSIONS - FT	18.0 X 126.0 X 52.0	
SHELL GENERIC MATERIAL	STAINLESS STEEL	
SHELL SPECIFIC MATERIAL	AUSTENITIC	
LINER GENERIC MATERIAL	NONE	
LINER SPECIFIC MATERIAL	N/A	
GAS CONTACTING DEVICE TYPE	NONE	
NUMBER OF CONTACTING ZONES	1	
LIQUID RECIRCULATION RATE - LITER/S	714.4	(11340 GPM)
L/G RATIO - LITER/CU.M	1.1	(8.3 GAL/1000ACF)
PH CONTROL ADDITIVE	ALKALINE FLYASH	
PRESSURE DROP - KPA	1.0	(4.0 IN-H2O)

MINNESOTA POWER & LIGHT: CLAY BOSWELL 3 (CONT.)

SUPERFICIAL GAS VELOCITY - M/S	2.4	(8.0 FT/S)
INLET GAS FLOW RATE - CU.M/S	613.5	(1300000 ACFM)
INLET GAS TEMPERATURE - C	123.3	(254 F)
SO2 REMOVAL EFFICENCY - %	.0	
PARTICLE REMOVAL EFFICIENCY - %	98.7	
ENERGY CONSUMPTION - %	.8	

PERFORMANCE DATA

PERIOD	MODULE	AVAILABILITY	OPERABILITY	RELIABILITY	UTILIZATION	% REMOVAL SO2	% REMOVAL PART.	PER HOURS	BOILER HOURS	FGD HOURS	CAP FACTOR
5/73	SYSTEM										

** PROBLEMS/SOLUTIONS/COMMENTS

SINCE STARTUP IN MAY 1973 SCALING AND PLUGGING HAVE OCCURRED IN NOZZLES, NOZZLE TREES, STRAINERS, ON PUNCH PLATE BAFFLES, IN THE WET/DRY ZONE, AND ON THE FAN AND THE MIST ELIMINATOR. PLUGGING HAS ALSO RESULTED AS DEPOSITS HAVE FALLEN INTO THE DRAINS AT THE BOTTOM OF THE SCRUBBER. DUE TO THE CALCIUM-RICH ASH, CHARACTERISTIC OF THE WESTERN COAL BURNED, THE SCALING IS AGGRAVATED. THE UTILITY HAS CONTROLLED SCALE BY BLOWDOWN OF THE SCRUBBING SYSTEM. THIS HAS MAINTAINED THE PROCESS CHEMISTRY BELOW SATURATION WITH RESPECT TO CALCIUM SULFITE. A VERY HIGH LEVEL OF MAINTENANCE HAS BEEN MAINTAINED ALSO TO MINIMIZE SCALE ACCUMULATION AND PLUGGING, THIS HAS INCLUDED WASHING OF THE WET FAN WHICH HAS RESULTED IN A STACK MIST PROBLEM. THE USE OF SOOT BLOWERS IN PLACE OF WASHING WAS ATTEMPTED BUT WAS UNSUCCESSFUL. THE UTILITY HAS REDUCED THE AMOUNT OF WASHING AND HAS CONSIDERED THE INSTALLATION OF REHEAT OR CONSTRUCTION OF A NEW LOW-VELOCITY STACK.

10/79	SYSTEM							744			
11/79	SYSTEM							720			
12/79	SYSTEM							744			

** PROBLEMS/SOLUTIONS/COMMENTS

NO INFORMATION WAS AVAILABLE FOR THE FOURTH QUARTER 1979.

1/80	SYSTEM							744			
2/80	SYSTEM							696			
3/80	SYSTEM							744			

** PROBLEMS/SOLUTIONS/COMMENTS

THE UTILITY REPORTED THAT THE SCRUBBER EXPERIENCED NO PROBLEMS DURING THE 1ST QUARTER OF 1980.

4/80	SYSTEM							720			
5/80	SYSTEM							744			
6/80	SYSTEM							720			

** PROBLEMS/SOLUTIONS/COMMENTS

THE UTILITY REPORTED THAT NO SCRUBBER-RELATED OUTAGES OCCURRED DURING THE SECOND QUARTER OF 1980. DOWN TIME FOR MAINTENANCE WAS NOT REQUIRED SINCE GENERAL MAINTENANCE CAN BE PERFORMED ON THE MINNESOTA POWER AND LIGHT PARTICLE SCRUBBERS WHILE THEY ARE IN SERVICE.

7/80	SYSTEM		100.0	100.0	90.3			720	650	650	60.2
8/80	SYSTEM		100.0	100.0	78.0			744	580	580	52.3
9/80	SYSTEM		100.0	100.0	84.0			744	625	625	54.8

EPA UTILITY FGD SURVEY: OCTOBER - DECEMBER 1981

MINNESOTA POWER & LIGHT: CLAY BOSWELL 3 (CONT.)

PERIOD	MODULE	AVAILABILITY	OPERABILITY	RELIABILITY	UTILIZATION	% REMOVAL SO2	% REMOVAL PART.	REP HOURS	BOILER HOURS	FGD HOURS	CAP. FACTOR
				PERFORMANCE DATA							

** PROBLEMS/SOLUTIONS/COMMENTS

NO OPERATIONAL PROBLEMS WERE REPORTED FOR THE JULY THROUGH SEPTEMBER PERIOD.

10/80	SYSTEM	100.0	100.0	100.0	85.9			744	639	639	62.3
11/80	SYSTEM	100.0	100.0	100.0	81.5			720	587	587	64.6
12/80	SYSTEM	100.0	100.0	100.0	81.6			744	607	607	60.9

** PROBLEMS/SOLUTIONS/COMMENTS

THE UTILITY REPORTED THAT NO SCRUBBER PROBLEMS WERE ENCOUNTERED DURING THE FOURTH QUARTER 1980.

1/81	SYSTEM	100.0	100.0	100.0	94.3			744	702	702	69.1
2/81	SYSTEM	100.0	100.0	100.0	97.0			672	651	651	73.2
3/81	SYSTEM	100.0	100.0	100.0	79.0			744	585	585	65.1

** PROBLEMS/SOLUTIONS/COMMENTS

THE UTILITY REPORTED THAT NO SCRUBBER-RELATED PROBLEMS WERE ENCOUNTERED DURING THE FIRST QUARTER 1981.

DURING MARCH THE BOILER WAS OUT OF SERVICE APPPOXIMATELY 159 HOURS TO REPAIR STEAM LEAKS AND TO PERFORM MAINTENANCE.

4/81	SYSTEM	100.0	100.0	100.0	62.1			720	447	447	50.9
5/81	SYSTEM	100.0	100.0	100.0	95.3			744	709	709	79.3
6/81	SYSTEM	100.0	100.0	100.0	96.7			720	696	696	75.7

** PROBLEMS/SOLUTIONS/COMMENTS

THE UTILITY REPORTED THAT NO MAJOR PROBLEMS WERE ENCOUNTERED DURING THE SECOND QUARTER 1981.

SECTION 14
DESIGN AND PERFORMANCE DATA FOR OPERATIONAL PARTICLE SCRUBBERS

COMPANY NAME	MINNESOTA POWER & LIGHT	
PLANT NAME	SYL LASKIN	
UNIT NUMBER	1	
CITY	AURORA	
STATE	MINNESOTA	
REGULATORY CLASSIFICATION	E	
PARTICULATE EMISSION LIMITATION - NG/J	258.	(.600 LB/MMBTU)
SO2 EMISSION LIMITATION - NG/J	1720.	(4.000 LB/MMBTU)
NOX EMISSION LIMITATION - NG/J	******	(****** LB/MMBTU)
NET PLANT GENERATING CAPACITY - MW	116	
GROSS UNIT GENERATING CAPACITY - MW	62	
NET UNIT GENERATING CAPACITY W/FGD - MW	57	
NET UNIT GENERATING CAPACITY WO/FGD - MW	58	
EQUIVALENT SCRUBBED CAPACITY - MW	58	
** UNIT DATA - BOILER AND STACK		
BOILER SUPPLIER	COMBUSTION ENGINEERING	
BOILER TYPE	PULVERIZED COAL	
BOILER SERVICE LOAD	INTERMEDIATE	
DESIGN BOILER FLUE GAS FLOW - CU.M/S	141.57	(300000 ACFM)
BOILER FLUE GAS TEMPERATURE - C	171.1	(340 F)
STACK HEIGHT - M	91.	(300 FT)
STACK SHELL	CONCRETE	
STACK TOP DIAMETER - M	3.2	(10.5 FT)
** FUEL DATA		
FUEL TYPE	COAL	
FUEL GRADE	SUBBITUMINOUS	
AVERAGE HEAT CONTENT - J/G	20469.	(8800 BTU/LB)
RANGE HEAT CONTENT - BTU/LB		7509-9923
AVERAGE ASH CONTENT - %	9.00	
RANGE ASH CONTENT - %	4.8-16.0	
AVERAGE MOISTURE CONTENT - %	26.70	
RANGE MOISTURE CONTENT - %	24.0-28.0	
AVERAGE SULFUR CONTENT - %	1.00	
RANGE SULFUR CONTENT - %	0.5-1.5	
AVERAGE CHLORIDE CONTENT - %	.01	
RANGE CHLORIDE CONTENT - %	0.00-0.07	
*** PARTICLE CONTROL		
** MECHANICAL COLLECTOR		
NUMBER	0	
TYPE	NONE	
** FABRIC FILTER		
NUMBER	0	
TYPE	NONE	
** ESP		
NUMBER	0	
TYPE	NONE	
** PARTICLE SCRUBBER		
NUMBER	1	
INITIAL START-UP DATE	6/71	
GENERIC TYPE	IMPINGEMENT TOWER	
SPECIFIC TYPE	NR	
TRADE NAME/COMMON NAME	NR	
SUPPLIER	KREBS ENGINEERS	
DIMENSIONS - FT	34.0 X 18.0 X 23.0	
SHELL GENERIC MATERIAL	STAINLESS STEEL	
SHELL SPECIFIC MATERIAL	AUSTENITIC	
LINER GENERIC MATERIAL	NONE	
LINER SPECIFIC MATERIAL	N/A	
GAS CONTACTING DEVICE TYPE	NONE	
NUMBER OF CONTACTING ZONES	1	
LIQUID RECIRCULATION RATE - LITER/S	151.2	(2400 GPM)
L/G RATIO - LITER/CU.M	1.1	(8.3 GAL/1000ACF)

MINNESOTA POWER & LIGHT: SYL LASKIN 1 (CONT.)

PH CONTROL ADDITIVE	ALKALINE FLYASH	
PRESSURE DROP - KPA	.6	(2.5 IN-H2O)
SUPERFICIAL GAS VELOCITY - M/S	2.1	(7.0 FT/S)
INLET GAS FLOW RATE - CU.M/S	137.4	(291160 ACFM)
INLET GAS TEMPERATURE - C	171.1	(340 F)
SO2 REMOVAL EFFICENCY - %	.0	
PARTICLE REMOVAL EFFICIENCY - %	97.8	
ENERGY CONSUMPTION - %	1.6	

PERFORMANCE DATA

PERIOD	MODULE	AVAILABILITY	OPERABILITY	RELIABILITY	UTILIZATION	% REMOVAL SO2	% REMOVAL PART.	PER HOURS	BOILER HOURS	FGD HOURS	CAP. FACTOR
6/71	SYSTEM										

** PROBLEMS/SOLUTIONS/COMMENTS

SINCE STARTUP IN JUNE 1971 SCALING AND PLUGGING HAVE OCCURRED IN NOZZLES, NOZZLE TREES, STRAINERS, ON PUNCH PLATE BAFFLES, IN THE WET/DRY ZONE, AND ON THE FAN AND THE MIST ELIMINATOR. PLUGGING HAS ALSO RESULTED AS DEPOSITS HAVE FALLEN INTO THE DRAINS AT THE BOTTOM OF THE SCRUBBER. DUE TO THE CALCIUM-RICH ASH, CHARACTERISTIC OF THE WESTERN COAL BURNED, THE SCALING IS AGGRAVATED. THE UTILITY HAS CONTROLLED SCALE BY BLOWDOWN OF THE SCRUBBING SYSTEM. THIS HAS MAINTAINED THE PROCESS CHEMISTRY BELOW SATURATION WITH RESPECT TO CALCIUM SULFITE. A VERY HIGH LEVEL OF MAINTENANCE HAS BEEN MAINTAINED ALSO TO MINIMIZE SCALE ACCUMULATION AND PLUGGING, THIS HAS INCLUDED WASHING OF THE WET FAN WHICH HAS RESULTED IN A STACK MIST PROBLEM. THE USE OF SOOT BLOWERS IN PLACE OF WASHING WAS ATTEMPTED BUT WAS UNSUCCESSFUL. THE UTILITY HAS REDUCED THE AMOUNT OF WASHING AND HAS CONSIDERED THE INSTALLATION OF REHEAT OR CONSTRUCTION OF A NEW LOW-VELOCITY STACK.
THE PROBLEMS AT SYL LASKIN ARE NOT AS SEVERE AS THE PROBLEMS AT CLAY BOSWELL DUE TO THE FACT THAT THE RECYCLE LOOP IS NOT CLOSED TO THE SAME EXTENT. THE MIST CARRYOVER PROBLEM IS LESS SEVERE OWING TO OPERATION OF THE UNIT AT PARTIAL LOAD RESULTING IN A LOWER STACK VELOCITY.

10/79	SYSTEM							744			
11/79	SYSTEM							720			
12/79	SYSTEM							744			

** PROBLEMS/SOLUTIONS/COMMENTS

NO INFORMATION WAS AVAILABLE FOR THE FOURTH QUARTER 1979.

1/80	SYSTEM							744			
2/80	SYSTEM							696			
3/80	SYSTEM							744			

** PROBLEMS/SOLUTIONS/COMMENTS

THE UTILITY REPORTED THAT THE SCRUBBER EXPERIENCED NO PROBLEMS DURING THE 1ST QUARTER OF 1980.

4/80	SYSTEM							720			
5/80	SYSTEM							744			
6/80	SYSTEM							720			

** PROBLEMS/SOLUTIONS/COMMENTS

THE UTILITY REPORTED THAT NO SCRUBBER-RELATED OUTAGES OCCURRED DURING THE SECOND QUARTER OF 1980. DOWN TIME FOR MAINTENANCE WAS NOT REQUIRED SINCE GENERAL MAINTENANCE CAN BE PERFORMED ON THE MINNESOTA POWER AND LIGHT PAR-

MINNESOTA POWER & LIGHT: SYL LASKIN 1 (CONT.)

PERIOD	MODULE	AVAILABILITY	OPERABILITY	RELIABILITY	UTILIZATION	% REMOVAL SO2	% REMOVAL PART.	PER HOURS	BOILER HOURS	FGD HOURS	CAP. FACTOR
				PERFORMANCE DATA							
			TICLE SCRUBBERS WHILE THEY ARE IN SERVICE.								
7/80	SYSTEM	100.0	100.0	100.0	56.6			744	421	421	25.2
8/80	SYSTEM	100.0	100.0	100.0	19.0			744	140	140	12.0
	** PROBLEMS/SOLUTIONS/COMMENTS										
			THE UTILITY REPORTED THAT NO BOILER OR FGD-RELATED PROBLEMS WERE ENCOUNTERED DURING JULY AND AUGUST. LOW UTILIZATION FACTORS WERE DUE TO A LACK OF POWER DEMAND.								
9/80	SYSTEM	100.0	100.0	100.0	4.4			720	33	33	1.9
	** PROBLEMS/SOLUTIONS/COMMENTS										
			NO SCRUBBER OUTAGES OCCURRED DURING SEPTEMBER. THE LOW UTILIZATION FACTOR WAS AGAIN THE RESULT OF A LACK OF DEMAND FOR POWER.								
10/80	SYSTEM	100.0			.0			744	0	744	.0
11/80	SYSTEM	100.0	100.0	100.0	24.3			720	175	175	10.2
12/80	SYSTEM	100.0	100.0	100.0	64.1			744	477	477	23.4
	** PROBLEMS/SOLUTIONS/COMMENTS										
			THE UTILITY REPORTED THAT NO SCRUBBER-RELATED PROBLEMS OCCURRED DURING THE FOURTH QUARTER 1980. LOW UTILIZATION FACTORS WERE CAUSED BY A LACK OF POWER DEMAND.								
1/81	SYSTEM	78.5	100.0	100.0	78.5			744	524	524	23.9
	** PROBLEMS/SOLUTIONS/COMMENTS										
			DURING JANUARY THE BOILER WAS OUT OF SERVICE APPROXIMATELY 160 HOURS DUE TO A TURBINE STEAM LEAK. THE BOILER WAS OUT OF SERVICE AN ADDITIONAL 60 HOURS DUE TO A LACK OF POWER DEMAND.									
2/81	SYSTEM	5.4	100.0	100.0	5.4			672	36	36	17.4
	** PROBLEMS/SOLUTIONS/COMMENTS										
			DURING FEBRUARY THE BOILER REMAINED OFF LINE FOR APPROXIMATELY 708 HOURS TO REPAIR A TURBINE STEAM LEAK.								
3/81	SYSTEM	99.1	100.0	100.0	79.0			744	588	588	44.8
	** PROBLEMS/SOLUTIONS/COMMENTS										
			DURING MARCH THE BOILER WAS OUT OF SERVICE SEVEN HOURS TO CLEAN THE ID FANS AND 77 HOURS DUE TO A LACK OF DEMAND.								
4/81	SYSTEM	100.0	100.0	100.0	100.0			720	720	720	46.0
	** PROBLEMS/SOLUTIONS/COMMENTS										
			DURING APRIL 10 HOURS OF OUTAGE TIME WAS NECESSARY TO WORK ON THE EXCITER.								
5/81	SYSTEM	64.1	100.0	100.0	64.0			744	476	476	31.3

EPA UTILITY FGD SURVEY: OCTOBER - DECEMBER 1981

MINNESOTA POWER & LIGHT: SYL LASKIN 1 (CONT.)

PERIOD	MODULE	AVAILABILITY	OPERABILITY	RELIABILITY	UTILIZATION	% REMOVAL SO2	% REMOVAL PART.	PER HOURS	BOILER HOURS	FGD HOURS	CAP. FACTOR
		PERFORMANCE DATA									

** PROBLEMS/SOLUTIONS/COMMENTS

DURING MAY THE UNIT WAS OUT OF SERVICE 209 HOURS FOR AN OVERHAUL.

SYSTEM DOWN TIME WAS NEEDED TO REPAIR A STEAM DRIVEN OIL PUMP.

FOLLOWING A TEST THE SYSTEM WAS TAKEN OFF-LINE FOR SANDBLASTING ID FANS.

6/81	SYSTEM	100.0			.0			720	0	0	

** PROBLEMS/SOLUTIONS/COMMENTS

IN JUNE THE UNIT WAS DOWN DUE TO A LACK OF DEMAND. DURING THIS PERIOD GENERAL MAINTENANCE WAS PERFORMED.

SECTION 14
DESIGN AND PERFORMANCE DATA FOR OPERATIONAL PARTICLE SCRUBBERS

COMPANY NAME	MINNESOTA POWER & LIGHT	
PLANT NAME	SYL LASKIN	
UNIT NUMBER	2	
CITY	AURORA	
STATE	MINNESOTA	
REGULATORY CLASSIFICATION	E	
PARTICULATE EMISSION LIMITATION - NG/J	258.	(.600 LB/MMBTU)
SO2 EMISSION LIMITATION - NG/J	1720.	(4.000 LB/MMBTU)
NOX EMISSION LIMITATION - NG/J	******	(****** LB/MMBTU)
NET PLANT GENERATING CAPACITY - MW	116	
GROSS UNIT GENERATING CAPACITY - MW	62	
NET UNIT GENERATING CAPACITY W/FGD - MW	57	
NET UNIT GENERATING CAPACITY WO/FGD - MW	58	
EQUIVALENT SCRUBBED CAPACITY - MW	58	
** UNIT DATA - BOILER AND STACK		
BOILER SUPPLIER	COMBUSTION ENGINEERING	
BOILER TYPE	PULVERIZED COAL	
BOILER SERVICE LOAD	INTERMEDIATE	
DESIGN BOILER FLUE GAS FLOW - CU.M/S	141.57	(300000 ACFM)
BOILER FLUE GAS TEMPERATURE - C	171.1	(340 F)
STACK HEIGHT - M	91.	(300 FT)
STACK SHELL	CONCRETE	
STACK TOP DIAMETER - M	3.2	(10.5 FT)
** FUEL DATA		
FUEL TYPE	COAL	
FUEL GRADE	SUBBITUMINOUS	
AVERAGE HEAT CONTENT - J/G	20469.	(8800 BTU/LB)
RANGE HEAT CONTENT - BTU/LB		7509-9923
AVERAGE ASH CONTENT - %	9.00	
RANGE ASH CONTENT - %	4.8-16.0	
AVERAGE MOISTURE CONTENT - %	26.70	
RANGE MOISTURE CONTENT - %	24.0-28.0	
AVERAGE SULFUR CONTENT - %	1.00	
RANGE SULFUR CONTENT - %	0.5-1.5	
AVERAGE CHLORIDE CONTENT - %	.01	
RANGE CHLORIDE CONTENT - %	0.00-0.07	
*** PARTICLE CONTROL		
** MECHANICAL COLLECTOR		
NUMBER	0	
TYPE	NONE	
** FABRIC FILTER		
NUMBER	0	
TYPE	NONE	
** ESP		
NUMBER	0	
TYPE	NONE	
** PARTICLE SCRUBBER		
NUMBER	1	
INITIAL START-UP DATE	6/71	
GENERIC TYPE	IMPINGEMENT TOWER	
SPECIFIC TYPE	NR	
TRADE NAME/COMMON NAME	NR	
SUPPLIER	KREBS ENGINEERS	
DIMENSIONS - FT	34.0 X 18.0 X 23.0	
SHELL GENERIC MATERIAL	STAINLESS STEEL	
SHELL SPECIFIC MATERIAL	AUSTENITIC	
LINER GENERIC MATERIAL	NONE	
LINER SPECIFIC MATERIAL	N/A	
GAS CONTACTING DEVICE TYPE	NONE	
NUMBER OF CONTACTING ZONES	1	
LIQUID RECIRCULATION RATE - LITER/S	151.2	(2400 GPM)
L/G RATIO - LITER/CU.M	1.1	(8.3 GAL/1000ACF)

MINNESOTA POWER & LIGHT: SYL LASKIN 2 (CONT.)

PH CONTROL ADDITIVE	ALKALINE FLYASH	
PRESSURE DROP - KPA	.6	(2.5 IN-H2O)
SUPERFICIAL GAS VELOCITY - M/S	2.1	(7.0 FT/S)
INLET GAS FLOW RATE - CU.M/S	137.4	(291160 ACFM)
INLET GAS TEMPERATURE - C	171.1	(340 F)
SO2 REMOVAL EFFICIENCY - %	.0	
PARTICLE REMOVAL EFFICIENCY - %	97.8	
ENERGY CONSUMPTION - %	1.6	

PERFORMANCE DATA

PERIOD	MODULE	AVAILABILITY	OPERABILITY	RELIABILITY	UTILIZATION	% REMOVAL SO2	% REMOVAL PART.	PER HOURS	BOILER HOURS	FGD HOURS	CAP. FACTOR
6/71	SYSTEM										

** PROBLEMS/SOLUTIONS/COMMENTS

SINCE STARTUP IN JUNE 1971 SCALING AND PLUGGING HAVE OCCURRED IN NOZZLES, NOZZLE TREES, STRAINERS, ON PUNCH PLATE BAFFLES, IN THE WET/DRY ZONE AND ON THE FAN AND THE MIST ELIMINATOR. PLUGGING HAS ALSO RESULTED AS DEPOSITS HAVE FALLEN INTO THE DRAINS AT THE BOTTOM OF THE SCRUBBER. DUE TO THE CALCIUM-RICH ASH, CHARACTERISTIC OF THE WESTERN COAL BURNED, THE SCALING IS AGGRAVATED. THE UTILITY HAS CONTROLLED SCALE BY BLOWDOWN OF THE SCRUBBING SYSTEM. THIS HAS MAINTAINED THE PROCESS CHEMISTRY BELOW SATURATION WITH RESPECT TO CALCIUM SULFITE. A VERY HIGH LEVEL OF MAINTENANCE HAS BEEN MAINTAINED ALSO TO MINIMIZE SCALE ACCUMULATION AND PLUGGING, THIS HAS INCLUDED WASHING OF THE WET FAN WHICH HAS RESULTED IN A STACK MIST PROBLEM. THE USE OF SOOT BLOWERS IN PLACE OF WASHING WAS ATTEMPTED BUT WAS UNSUCCESSFUL. THE UTILITY HAS REDUCED THE AMOUNT OF WASHING AND HAS CONSIDERED THE INSTALLATION OF REHEAT OR CONSTRUCTION OF A NEW LOW-VELOCITY STACK.
THE PROBLEMS AT SYL LASKIN ARE NOT AS SEVERE AS THE PROBLEMS AT CLAY BOSWELL DUE TO THE FACT THAT THE RECYCLE LOOP IS NOT CLOSED TO THE SAME EXTENT. THE MIST CARRYOVER PROBLEM IS LESS SEVERE OWING TO OPERATION OF THE UNIT AT PARTIAL LOAD RESULTING IN A LOWER STACK VELOCITY.

10/79	SYSTEM							744			
11/79	SYSTEM							720			
12/79	SYSTEM							744			

** PROBLEMS/SOLUTIONS/COMMENTS

NO INFORMATION WAS AVAILABLE FOR THE FOURTH QUARTER 1979.

1/80	SYSTEM							744			
2/80	SYSTEM							696			
3/80	SYSTEM							744			

** PROBLEMS/SOLUTIONS/COMMENTS

THE UTILITY REPORTED THAT THE SCRUBBER EXPERIENCED NO PROBLEMS DURING THE 1ST QUARTER OF 1980.

4/80	SYSTEM							720			
5/80	SYSTEM							744			
6/80	SYSTEM							720			

** PROBLEMS/SOLUTIONS/COMMENTS

THE UTILITY REPORTED THAT NO SCRUBBER-RELATED OUTAGES OCCURRED DURING THE SECOND QUARTER OF 1980. DOWN TIME FOR MAINTENANCE WAS NOT REQUIRED SINCE GENERAL MAINTENANCE CAN BE PERFORMED ON THE MINNESOTA POWER AND LIGHT PAR-

MINNESOTA POWER & LIGHT: SYL LASKIN 2 (CONT.)

PERIOD	MODULE	AVAILABILITY	OPERABILITY	RELIABILITY	UTILIZATION	% REMOVAL SO2	% REMOVAL PART.	PER HOURS	BOILER HOURS	FGD HOURS	CAP. FACTOR
				PERFORMANCE DATA							
			TICLE SCRUBBERS WHILE THEY ARE IN SERVICE.								
7/80	SYSTEM	100.0	100.0	100.0	24.5			744	182	182	12.3
	** PROBLEMS/SOLUTIONS/COMMENTS										
			THE BOILER DID NOT OPERATE MOST OF JULY DUE TO A BOILER INSPECTION. NO PROBLEMS WERE ENCOUNTERED WITH THE FGD UNIT.								
8/80	SYSTEM	100.0	100.0	100.0	15.0			744	115	115	5.0
	** PROBLEMS/SOLUTIONS/COMMENTS										
			THE BOILER OPERATED ONLY 115 HOURS DURING AUGUST DUE TO A LACK OF DEMAND.								
9/80	SYSTEM	100.0	100.0	100.0	5.2			720	39	39	2.4
	** PROBLEMS/SOLUTIONS/COMMENTS										
			THE UTILITY REPORT THAT NO SCRUBBER OUTAGES OCCURRED DURING SEPTEMBER. THE LOW UTILIZATION FACTOR RESULTED FROM A LACK OF DEMAND FOR POWER.								
10/80	SYSTEM	100.0	100.0	100.0	26.3			744	195	195	15.0
11/80	SYSTEM	100.0	100.0	100.0	76.0			720	547	547	37.2
12/80	SYSTEM	100.0	100.0	100.0	70.8			744	527	527	34.9
	** PROBLEMS/SOLUTIONS/COMMENTS										
			THE UTILITY REPORTED THAT NO SCRUBBER-RELATED PROBLEMS WERE ENCOUNTERED DURING THE FOURTH QUARTER.								
1/81	SYSTEM	100.0	100.0	100.0	45.3			744	337	337	23.8
	** PROBLEMS/SOLUTIONS/COMMENTS										
			DURING JANUARY THE BOILER WAS OUT OF SERVICE APPROXIMATELY 407 HOURS DUE TO A LACK OF POWER DEMAND.								
2/81	SYSTEM	100.0	100.0	100.0	97.4			672	653	653	28.5
	** PROBLEMS/SOLUTIONS/COMMENTS										
			DURING FEBRUARY THE UTILITY REPORTED THAT NO SCRUBBER-RELATED PROBLEMS OCCURRED.								
3/81	SYSTEM	100.0			.0			744	0	0	.0
	** PROBLEMS/SOLUTIONS/COMMENTS										
			DURING MARCH THE BOILER WAS OUT OF SERVICE TO FIND THE CAUSE OF A TURBINE VIBRATION.								
4/81	SYSTEM	88.2	100.0	100.0	56.4			720	406	406	26.9
	** PROBLEMS/SOLUTIONS/COMMENTS										
			DURING APRIL 229 HOURS OF DOWN TIME WAS DUE TO A LACK OF DEMAND.								
			THE UNIT WAS DOWN 109 HOURS FOR A BEARING CHECK AND REPAIR DUE TO HIGH VIBRATION.								
5/81	SYSTEM	94.1	100.0	100.0	55.0			744	409	409	28.7

PERIOD	MODULE	AVAILABILITY	OPERABILITY	RELIABILITY	UTILIZATION	% REMOVAL SO2	% REMOVAL PART.	PEP HOURS	BOILER HOURS	FGD HOURS	CAP. FACTOR
		PERFORMANCE DATA									

** PROBLEMS/SOLUTIONS/COMMENTS

THE BOILER WAS OFF-LINE APPROXIMATELY 210 HOURS IN MAY DUE TO A LACK OF DEMAND.

FOLLOWING A TEST CONDUCTED IN JUNE THE UNIT WAS SHUTDOWN FOR SANDBLASTING THE ID FANS.

6/81	SYSTEM	100.0			.0			720	0	0	

** PROBLEMS/SOLUTIONS/COMMENTS

DURING JUNE THE UNIT WAS OFF-LINE DUE TO A LACK OF DEMAND. DURING THIS PERIOD GENERAL MAINTENANCE WAS PERFORMED.

SECTION 14
DESIGN AND PERFORMANCE DATA FOR OPERATIONAL PARTICLE SCRUBBERS

COMPANY NAME	MONTANA-DAKOTA UTILITIES	
PLANT NAME	LEWIS & CLARK	
UNIT NUMBER	1	
CITY	SIDNEY	
STATE	MONTANA	
REGULATORY CLASSIFICATION	E	
PARTICULATE EMISSION LIMITATION - NG/J	86.	(.200 LB/MMBTU)
SO2 EMISSION LIMITATION - NG/J	430.	(1.000 LB/MMBTU)
NOX EMISSION LIMITATION - NG/J	******	(****** LB/MMBTU)
NET PLANT GENERATING CAPACITY - MW	50	
GROSS UNIT GENERATING CAPACITY - MW	55	
NET UNIT GENERATING CAPACITY W/FGD - MW	50	
NET UNIT GENERATING CAPACITY WO/FGD - MW	52	
EQUIVALENT SCRUBBED CAPACITY - MW	55	
** UNIT DATA - BOILER AND STACK		
BOILER SUPPLIER	COMBUSTION ENGINEERING	
BOILER TYPE	PULVERIZED COAL	
BOILER SERVICE LOAD	BASE	
DESIGN BOILER FLUE GAS FLOW - CU.M/S	153.37	(325000 ACFM)
BOILER FLUE GAS TEMPERATURE - C	215.6	(420 F)
STACK HEIGHT - M	76.	(250 FT)
STACK SHELL	NONE	
STACK TOP DIAMETER - M	4.4	(14.5 FT)
** FUEL DATA		
FUEL TYPE	COAL	
FUEL GRADE	LIGNITE	
AVERAGE HEAT CONTENT - J/G	15003.	(6450 BTU/LB)
RANGE HEAT CONTENT - BTU/LB		6200-6700
AVERAGE ASH CONTENT - %	7.80	
RANGE ASH CONTENT - %	7.2-9.3	
AVERAGE MOISTURE CONTENT - %	36.20	
RANGE MOISTURE CONTENT - %	34.3-38.2	
AVERAGE SULFUR CONTENT - %	.61	
RANGE SULFUR CONTENT - %	0.3-1.4	
AVERAGE CHLORIDE CONTENT - %	.03	
RANGE CHLORIDE CONTENT - %	******	
*** PARTICLE CONTROL		
** MECHANICAL COLLECTOR		
NUMBER	1	
TYPE	MULTICLONES	
SUPPLIER	WESTERN PREC. DIVISION, JOY	
INLET FLUE GAS CAPACITY - CU.M/S	106.2	(225000 ACFM)
INLET FLUE GAS TEMPERATURE - C	176.7	(350 F)
PRESSURE DROP - KPA	.4	(1. IN-H2O)
PARTICLE REMOVAL EFFICENCY -%	85.7	
** ESP		
** PARTICLE SCRUBBER		
GENERIC TYPE	VENTURI TOWER	
SPECIFIC TYPE	VARIABLE-THROAT/BOTTOM-ENTRY LIQUID DISTRIBUTION	
TRADE NAME/COMMON NAME	FLOODED DISC SCRUBBER	
SUPPLIER	RESEARCH-COTTRELL	
DIMENSIONS - FT	10.5 DIA X 27.0	
SHELL GENERIC MATERIAL	CARBON STEEL	
SHELL SPECIFIC MATERIAL	AISI 1110	
LINER GENERIC MATERIAL	ORGANIC	
LINER SPECIFIC MATERIAL	GLASS FLAKE-FILLED POLYESTER	
GAS CONTACTING DEVICE TYPE	NONE	
NUMBER OF CONTACTING ZONES	1	
LIQUID RECIRCULATION RATE - LITER/S	212.6	(3374 GPM)
L/G RATIO - LITER/CU.M	1.7	(13.0 GAL/1000ACF)
PH CONTROL ADDITIVE	LIMESTONE	
PRESSURE DROP - KPA	3.2	(13.0 IN-H2O)
INLET GAS FLOW RATE - CU.M/S	148.0	(313730 ACFM)

MONTANA-DAKOTA UTILITIES: LEWIS & CLARK 1 (CONT.)

INLET GAS TEMPERATURE - C	215.6	(420 F)
ENERGY CONSUMPTION - %	3.6	

PERFORMANCE DATA

PERIOD	MODULE	AVAILABILITY	OPERABILITY	RELIABILITY	UTILIZATION	% REMOVAL SO2	% REMOVAL PART.	PER HOURS	BOILER HOURS	FGD HOURS	CAP. FACTOR
10/79	SYSTEM							720			

** PROBLEMS/SOLUTIONS/COMMENTS

DURING A SCHEDULED BOILER OUTAGE GENERAL SCRUBBER MAINTENANCE WAS PERFORMED.

11/79	SYSTEM							720			

** PROBLEMS/SOLUTIONS/COMMENTS

DURING NOVEMBER THE SCPUBBER WAS TEMPORARILY BYPASSED TO ALLOW FOR REPAIPS NECESSITATED BY A LEAK IN THE FLOODED DISC SCRUBBER.

12/79	SYSTEM							744			

** PPOBLEMS/SOLUTIONS/COMMENTS

THE UTILITY REPORTED THAT NO SCRUBBER PROBLEMS OCCURRED DURING DECEMBER.

1/80	SYSTEM							744			
2/80	SYSTEM							696			
3/80	SYSTEM							744			

** PROBLEMS/SOLUTIONS/COMMENTS

DURING THE JANUARY THROUGH MARCH PERIOD THE SCRUBBER WAS AVAILABLE MORE THAN 95% OF THE TIME.

THE EROSION PROBLEM MENTIONED DURING NOVEMBER CONTINUED. SECTIONS OF THE EXTERIOR CARBON STEEL LINED COLUMN WALL SUPPORTING THE FLOODED DISC WERE ERODING, FILLING THE INNER CHAMBER WITH SLURRY AND ULTIMATELY PENDERING THE DISC MOVEMENT MECHANISM INOPERATIVE. THE UTILITY HAS MANAGED TO KEEP THE SCRUBBER OPERATING AS A STOP-GAP MEASURE BETWEEN UNIT SHUTDOWNS BY INSERTING A GARDEN HOSE IN THE COLUMN HOLES AND CONTINUALLY FLUSHING THE INNER CHAMBER. THE UTILITY HAS HAD SOME SUCCESS IN OTHER EROSION APEAS BY MAKING REPAIRS WITH A HASTELLOY MATERIAL. PLANS ARE BEING MADE TO JACKET THE ENTIRE DISC SUPPORT COLUMN WITH HASTELLOY G.

4/80	SYSTEM							720			
5/80	SYSTEM							744			
6/80	SYSTEM							720			

** PROBLEMS/SOLUTIONS/COMMENTS

THE BOILER WAS SHUT DOWN FOR TWO WEEKS IN MAY.

CREWS INSPECTING THE SCRUBBING SYSTEM DISCOVERED THAT THE NINE FOOT SCRUBBER LINER SECTION AT THE BOTTOM OF THE CYCLONIC MIST ELIMINATOR WAS SEVEPELY EPRODED. THE LINER HAS LASTED THREE YEARS. THE UTILITY CONSIDEPS THIS A NORMAL MAINTENANCE PROBLEM. AT ONE TIME LINERS IN THIS SECTION WEPE REPLACED EVERY SIX MONTHS. REPLACEMENT WORK ON THE LATEST FAILURE IS EXPECTED TO BEGIN BY JULY 21.

THE ENTIRE SCRUBBER COLUMN SUPPORTING THE DISC WHICH WAS ERODING AS REPORTED DURING THE PREVIOUS TWO QUARTERS HAS BEEN CLAD WITH HASTELLOY G.

MONTANA-DAKOTA UTILITIES: LEWIS & CLARK 1 (CONT.)

PERIOD	MODULE	AVAILABILITY	OPERABILITY	RELIABILITY	UTILIZATION	% REMOVAL SO2	% REMOVAL PART.	PER HOURS	BOILER HOURS	FGD HOURS	CAP. FACTOR

THE UTILITY REPORTED THAT THE SCRUBBER HAS EXPEPIENCED PLUGGING AT WET/DRY INTERFACES WITHIN THE STRUCTURE. IT APPEARS THAT THIS IS RELATED TO COAL SULFUR CONTENT. WHEN THE SULFUR CONTENT IS RELATIVELY HIGH (0.7 TO 1.0% AT LEWIS AND CLARK) THE PLUGGING DOES NOT OCCUR. LIMESTONE IS ADDED AS REQUIRED TO PREVENT THE OCCURRANCE OF LOW PH LEVELS. WHEN THE SULFUR CONTENT FALLS TO THE 0.3% RANGE THE PH RISES AS A RESULT OF THE ALKALINE CONSTITUENTS IN THE FLY ASH UNTIL SOFT SCALE PLUGGING RESULTS. THE UTILITY HAS CONSIDERED ADDING ACID TO STABILIZE THE PH WHEN THE COAL SULFUR CONTENT DROPS.

7/80	SYSTEM							744			

** PROBLEMS/SOLUTIONS/COMMENTS

DURING JULY TWO WEEKS OF DOWN TIME WAS NECESSARY TO REPLACE THE MIST ELIMINATOR LINER.

THE PROBLEM WITH THE FLOODED DISC BUILDUP MENTIONED EARLIER CONTINUED. THE UTILITY PERFORMS THE NECESSARY REPAIRS IN THREE TO FOUR HOURS WHEN THIS OCCURS.

8/80	SYSTEM							744			
9/80	SYSTEM							720			

** PROBLEMS/SOLUTIONS/COMMENTS

THE UTILITY REPORTED THAT NO MAJOR PROBLEMS WERE ENCOUNTERED WITH SCRUBBING OPERATIONS DURING THE MONTHS OF AUGUST AND SEPTEMBER.

10/80	SYSTEM							744			
11/80	SYSTEM							720			
12/80	SYSTEM							744			

** PROBLEMS/SOLUTIONS/COMMENTS

THE UTILITY REPORTED THAT NO MAJOR PROBLEMS WERE ENCOUNTERED WITH THE SCRUBBING OPERATIONS DURING THE OCTOBER THROUGH DECEMBER PERIOD.

SCRUBBING OPERATIONS WERE SHUTDOWN FOR ONE WEEK DURING THE LAST PART OF OCTOBER FOR A SCHEDULED MAINTENANCE OVERHAUL AND NO PROBLEMS WERE FOUND.

1/81	SYSTEM							744			

** PROBLEMS/SOLUTIONS/COMMENTS

THE UTILITY REPORTED THAT NO MAJOR SCRUBBER PROBLEMS OCCURRED DURING JANUARY.

2/81	SYSTEM							672			

** PROBLEMS/SOLUTIONS/COMMENTS

ON FEBRUARY 10 THE SCRUBBER WAS SHUT DOWN FOR FIVE HOURS DUE TO A PLUGGED VENTURI.

ON FEBRUARY 23 A LEAK WAS DISCOVERED ON THE OUTER WALL OF THE SCRUBBER, LOCATED BELOW THE VENTURI. THE LEAK WAS TEMPORARILY REPAIRED FROM THE OUTSIDE WHILE THE SCRUBBER REMAINED ON-LINE. THE UTILITY PLANNED TO REPAIR THE LEAK DURING THE SCHEDULED OUTAGE IN MARCH.

3/81	SYSTEM							744			

EPA UTILITY FGD SURVEY: OCTOBER - DECEMBER 1981

MONTANA-DAKOTA UTILITIES: LEWIS & CLARK 1 (CONT.)

PERIOD	MODULE AVAILABILITY	OPERABILITY	RELIABILITY	UTILIZATION	% REMOVAL SO2	% REMOVAL PART.	PER HOURS	BOILER HOURS	FGD HOURS	CAP. FACTOR
				PERFORMANCE DATA						

** PROBLEMS/SOLUTIONS/COMMENTS

THE SCHEDULED OUTAGE PERIOD WAS HELD FROM MARCH 3 TO 15. DURING THIS TIME THE VENTURI AND SUMP WERE INSPECTED. THE LEAK DISCOVERED EARLIER IN FEBRUARY WAS REPAIRED CORRECTLY.

SECTION 14
DESIGN AND PERFORMANCE DATA FOR OPERATIONAL PARTICLE SCRUBBERS

COMPANY NAME	PACIFIC POWER & LIGHT	
PLANT NAME	DAVE JOHNSTON	
UNIT NUMBER	4	
CITY	GLENROCK	
STATE	WYOMING	
REGULATORY CLASSIFICATION	D	
PARTICULATE EMISSION LIMITATION - NG/J	90.	(.210 LB/MMBTU)
SO2 EMISSION LIMITATION - NG/J	215.	(.500 LB/MMBTU)
NOX EMISSION LIMITATION - NG/J	******	(****** LB/MMBTU)
NET PLANT GENERATING CAPACITY - MW	*****	
GROSS UNIT GENERATING CAPACITY - MW	330	
NET UNIT GENERATING CAPACITY W/FGD - MW	327	
NET UNIT GENERATING CAPACITY WO/FGD - MW	330	
EQUIVALENT SCRUBBED CAPACITY - MW	330	
** UNIT DATA - BOILER AND STACK		
BOILER SUPPLIER	COMBUSTION ENGINEERING	
BOILER TYPE	PULVERIZED COAL	
BOILER SERVICE LOAD	BASE	
DESIGN BOILER FLUE GAS FLOW - CU.M/S	707.85	(1500000 ACFM)
BOILER FLUE GAS TEMPERATURE - C	132.2	(270 F)
STACK HEIGHT - M	76.	(250 FT)
STACK SHELL	******	
STACK TOP DIAMETER - M	*******	(***** FT)
** FUEL DATA		
FUEL TYPE	COAL	
FUEL GRADE	SUBBITUMINOUS	
AVERAGE HEAT CONTENT - J/G	17282.	(7430 BTU/LB)
RANGE HEAT CONTENT - BTU/LB		5000-9000
AVERAGE ASH CONTENT - %	12.00	
RANGE ASH CONTENT - %	******	
AVERAGE MOISTURE CONTENT - %	26.00	
RANGE MOISTURE CONTENT - %	******	
AVERAGE SULFUR CONTENT - %	.50	
RANGE SULFUR CONTENT - %	******	
AVERAGE CHLORIDE CONTENT - %	.04	
RANGE CHLORIDE CONTENT - %	******	

*** PARTICLE CONTROL

** PARTICLE SCRUBBER		
NUMBER	3	
INITIAL START-UP DATE	4/72	
GENERIC TYPE	VENTURI TOWER	
SPECIFIC TYPE	VARIABLE-THROAT/TOP-ENTRY PLUMB BOB	
TRADE NAME/COMMON NAME	N/A	
SUPPLIER	GE ENVIRONMENTAL SERVICES	
SHELL GENERIC MATERIAL	CARBON STEEL	
SHELL SPECIFIC MATERIAL	AISI 1110	
LINER GENERIC MATERIAL	ORGANIC	
LINER SPECIFIC MATERIAL	POLYESTER	
GAS CONTACTING DEVICE TYPE	N/A	
LIQUID RECIRCULATION RATE - LITER/S	409.5	(6500 GPM)
L/G RATIO - LITER/CU.M	1.7	(13.0 GAL/1000ACF)
PH CONTROL ADDITIVE	LIME/ALKALINE FLYASH	
PRESSURE DROP - KPA	2.5	(10.0 IN-H2O)
INLET GAS FLOW RATE - CU.M/S	327.5	(694000 ACFM)
INLET GAS TEMPERATURE - C	135.0	(275 F)
SO2 REMOVAL EFFICENCY - %	40.0	
PARTICLE REMOVAL EFFICIENCY - %	99.7	
ENERGY CONSUMPTION - %	.9	

PERIOD	MODULE	AVAILABILITY	OPERABILITY	RELIABILITY	UTILIZATION	% REMOVAL SO2	% REMOVAL PART.	PER HOURS	BOILER HOURS	FGD HOURS	CAP. FACTOR
4/72	SYSTEM										

** PROBLEMS/SOLUTIONS/COMMENTS

SINCE STARTUP IN APRIL 1972, THE SCRUBBING UNIT HAS EXPERIENCED MAJOR SCALING PROBLEMS. HARD GYPSUM SCALE ACCUMULATES IN THE SCRUBBER VESSELS AND PIPING. THE USE OF LIME FOR PH CONTROL AND LIGNO SULFONATE TO ALTER THE HARDNESS OF DEPOSITS IMPROVED THE SCALE PROBLEM. FRESH WATER WASHING HAS BEEN REQUIRED TO FLUSH ASH AND SCALE DEPOSITS FROM THE SCRUBBER VESSELS.
SOLIDS BUILDUP HAS OCCURRED AT THE WET-DRY INTERFACE AND IN THE BLEED AND RECYCLE LINES. THE UTILITY IS USING AN ADDITIVE (HEXAMATA PHOSPHATE) IN WHICH THE EFFECTS HAVE YET TO BE DETERMINED.
ADDITIONAL OPERATING PROBLEMS EXPERIENCED SINCE STARTUP INCLUDE EROSION IN THE RECYCLE PUMP AND "SILTING" DURING SHUTDOWN.
THE UTILITY CHARACTERIZED THE AVAILABILITY AS BEING DEPENDENT ON THE AMOUNT OF BLOWDOWN AND FRESH WATER IRRIGATION THAT ARE EMPLOYED.

10/79	SYSTEM							744			
11/79	SYSTEM							720			
12/79	SYSTEM							744			

** PROBLEMS/SOLUTIONS/COMMENTS

NO INFORMATION WAS AVAILABLE FOR THE FOURTH QUARTER 1979.

1/80	SYSTEM							744			
2/80	SYSTEM							696			
3/80	SYSTEM							744			

** PROBLEMS/SOLUTIONS/COMMENTS

NO INFORMATION WAS AVAILABLE FOR THE FIRST QUARTER OF 1980.

4/80	SYSTEM							720			
5/80	SYSTEM							744			
6/80	SYSTEM							720			

** PROBLEMS/SOLUTIONS/COMMENTS

THE UTILITY REPORTED THAT NO MAJOR PROBLEMS OCCURRED DURING THE SECOND QUARTER OF 1980.

7/80	SYSTEM							744			
8/80	SYSTEM							744			
9/80	SYSTEM							720			

** PROBLEMS/SOLUTIONS/COMMENTS

NO INFORMATION WAS AVAILABLE FOR THE THIRD QUARTER OF 1980.

10/80	SYSTEM							744			
11/80	SYSTEM							720			
12/80	SYSTEM							744			

PACIFIC POWER & LIGHT: DAVE JOHNSTON 4 (CONT.)

PERIOD	MODULE	AVAILABILITY	OPERABILITY	RELIABILITY	UTILIZATION	% REMOVAL SO2	% REMOVAL PART.	PER HOURS	BOILER HOURS	FGD HOURS	CAP. FACTOR
		PERFORMANCE DATA									

** PROBLEMS/SOLUTIONS/COMMENTS

THE UTILITY REPORTED THAT NO MAJOR PROBLEMS WERE ENCOUNTERED WITH THE SCRUBBING OPERATIONS DURING THE OCTOBER THROUGH DECEMBER PERIOD.

1/81	SYSTEM	744
2/81	SYSTEM	672
3/81	SYSTEM	744

** PROBLEMS/SOLUTIONS/COMMENTS

NO INFORMATION WAS AVAILABLE FOR THE FIRST QUARTER 1981.

SECTION 14
DESIGN AND PERFORMANCE DATA FOR OPERATIONAL PARTICLE SCRUBBERS

COMPANY NAME	POTOMAC ELECTRIC POWER	
PLANT NAME	DICKERSON	
UNIT NUMBER	1	
CITY	DICKERSON	
STATE	MARYLAND	
REGULATORY CLASSIFICATION	******	
PARTICULATE EMISSION LIMITATION - NG/J	******	(****** LB/MMBTU)
SO2 EMISSION LIMITATION - NG/J	******	(****** LB/MMBTU)
NOX EMISSION LIMITATION - NG/J	******	(****** LB/MMBTU)
NET PLANT GENERATING CAPACITY - MW	1348	
GROSS UNIT GENERATING CAPACITY - MW	190	
NET UNIT GENERATING CAPACITY W/FGD - MW	183	
NET UNIT GENERATING CAPACITY WO/FGD - MW	*****	
EQUIVALENT SCRUBBED CAPACITY - MW	190	
** UNIT DATA - BOILER AND STACK		
BOILER SUPPLIER	COMBUSTION ENGINEERING	
BOILER TYPE	PULVERIZED COAL	
BOILER SERVICE LOAD	******	
DESIGN BOILER FLUE GAS FLOW - CU.M/S	********	(******* ACFM)
BOILER FLUE GAS TEMPERATURE - C	*******	(**** F)
STACK HEIGHT - M	213.	(700 FT)
STACK SHELL	CONCRETE	
STACK TOP DIAMETER - M	*******	(***** FT)
** FUEL DATA		
FUEL TYPE	COAL	
FUEL GRADE	******	
AVERAGE HEAT CONTENT - J/G	27214.	(11700 BTU/LB)
RANGE HEAT CONTENT - BTU/LB		******
AVERAGE ASH CONTENT - %	14.00	
RANGE ASH CONTENT - %	******	
AVERAGE MOISTURE CONTENT - %	********	
RANGE MOISTURE CONTENT - %	6.0-7.0	
AVERAGE SULFUR CONTENT - %	2.00	
RANGE SULFUR CONTENT - %	******	
AVERAGE CHLORIDE CONTENT - %	********	
RANGE CHLORIDE CONTENT - %	******	

*** PARTICLE CONTROL

** ESP	
TYPE	COLD SIDE
** PARTICLE SCRUBBER	
INITIAL START-UP DATE	0/78
GENERIC TYPE	VENTURI TOWER
SPECIFIC TYPE	VARIABLE-THROAT/TOP-ENTRY PLUMB BOB
TRADE NAME/COMMON NAME	N/A
SHELL GENERIC MATERIAL	CARBON STEEL
SHELL SPECIFIC MATERIAL	AISI 1110
GAS CONTACTING DEVICE TYPE	NONE
NUMBER OF CONTACTING ZONES	2

PERFORMANCE DATA

PERIOD	MODULE	AVAILABILITY	OPERABILITY	RELIABILITY	UTILIZATION	% REMOVAL SO2	% REMOVAL PART.	PER HOURS	BOILER HOURS	FGD HOURS	CAP. FACTOR
10/79	SYSTEM	100.0		83.6				744	622	622	
11/79	SYSTEM	96.0		80.1				720	601	577	
12/79	SYSTEM	100.0		87.4				744	650	650	

POTOMAC ELECTRIC POWER: DICKERSON 1 (CONT.)

PERIOD	MODULE	AVAILABILITY	OPERABILITY	RELIABILITY	UTILIZATION	% REMOVAL SO2	% REMOVAL PART.	PER HOURS	BOILER HOURS	FGD HOURS	CAP. FACTOR
		PERFORMANCE DATA									
	** PROBLEMS/SOLUTIONS/COMMENTS										
		DURING THIS PERIOD ONLY ONE SCRUBBER RELATED OUTAGE OCCURRED. THE OUTAGE WAS FOR AN ID FAN INSPECTION WHICH LASTED ONE DAY.									
1/80	SYSTEM	100.0	100.0		100.0			744	744	744	
2/80	SYSTEM	94.3	95.8		94.3			696	685	656	
3/80	SYSTEM	100.0	100.0		100.0			744	744	744	
	** PROBLEMS/SOLUTIONS/COMMENTS										
		DURING THE FIRST QUARTER OF 1980 ONLY ONE SCRUBBER OUTAGE OCCURRED. IN FEBRUARY OUTAGE TIME WAS NECESSARY TO REPAIR A SLURRY RECYCLE LINE LEAK.									
4/80	SYSTEM							720			
5/80	SYSTEM							744			
6/80	SYSTEM							720			
	** PROBLEMS/SOLUTIONS/COMMENTS										
		DICKERSON 1 SCRUBBER DEPENDABILITY FACTORS WERE UNAVAILABLE FOR THE APRIL-JUNE PERIOD. THESE FIGURES SHOULD BE AVAILABLE BY THE THIRD QUARTER REPORT. THE UTILITY REPORTED THAT THE FGD SYSTEM OPERATED THE ENTIRE SECOND QUARTER WITH ESSENTIALLY 100% AVAILABILITY. NO SCRUBBER-RELATED PROBLEMS WERE REPORTED.									
7/80	SYSTEM							744			
8/80	SYSTEM							744			
9/80	SYSTEM							720			
	** PROBLEMS/SOLUTIONS/COMMENTS										
		THE UTILITY REPORTED HAVING MINIMAL SCRUBBING SYSTEM PROBLEMS DURING THE JULY-SEPTEMBER PERIOD.									
		THE BOILER CAPACITY WAS REDUCED DURING PART OF THE PERIOD DUE TO A LINING FAILURE IN THE SCRUBBING SYSTEM PIPING.									
10/80	SYSTEM							744			
11/80	SYSTEM							720			
12/80	SYSTEM							744			
	** PROBLEMS/SOLUTIONS/COMMENTS										
		DURING THE OCTOBER THROUGH DECEMBER PERIOD THE BOILER WAS OPERATED AT A 60% (110 MW) CAPACITY DUE TO A LINING FAILURE IN THE SCRUBBING SYSTEM PIPING.									
1/81	SYSTEM	97.0	88.1	91.9	82.1			744	694	611	
	** PROBLEMS/SOLUTIONS/COMMENTS										
		DURING JANUARY APPROXIMATELY 53 HOURS OF OUTAGE TIME WAS CAUSED BY PROBLEMS WITH THE RECYCLE LINE REDUCER AND THE BLEED LINE SPOOL.									
2/81	SYSTEM	.0			.0			672	0	0	

EPA UTILITY FGD SURVEY: OCTOBER - DECEMBER 1981

POTOMAC ELECTRIC POWER: DICKERSON 1 (CONT.)

PERIOD	MODULE	AVAILABILITY	OPERABILITY	RELIABILITY	UTILIZATION	% REMOVAL SO2	% REMOVAL PART.	PER HOURS	BOILER HOURS	FGD HOURS	CAP. FACTOR
3/81	SYSTEM	.0			.0			744	0	0	

** PROBLEMS/SOLUTIONS/COMMENTS

DICKERSON UNITS 1, 2 AND 3 WERE SHUT DOWN SO THAT THE STACK AND THE COMMON DUCT LEADING TO THE STACK COULD BE RELINED WITH PLASITE. UNIT 1 WAS SHUT DOWN ON JANUARY 31 AND REMAINED DOWN THROUGHOUT FEBRUARY AND MARCH DUE TO THESE REPAIRS.

SECTION 14
DESIGN AND PERFORMANCE DATA FOR OPERATIONAL PARTICLE SCRUBBERS

COMPANY NAME	POTOMAC ELECTRIC POWER	
PLANT NAME	DICKERSON	
UNIT NUMBER	2	
CITY	DICKERSON	
STATE	MARYLAND	
REGULATORY CLASSIFICATION	******	
PARTICULATE EMISSION LIMITATION - NG/J	******	(****** LB/MMBTU)
SO2 EMISSION LIMITATION - NG/J	******	(****** LB/MMBTU)
NOX EMISSION LIMITATION - NG/J	******	(****** LB/MMBTU)
NET PLANT GENERATING CAPACITY - MW	1348	
GROSS UNIT GENERATING CAPACITY - MW	190	
NET UNIT GENERATING CAPACITY W/FGD - MW	183	
NET UNIT GENERATING CAPACITY WO/FGD - MW	*****	
EQUIVALENT SCRUBBED CAPACITY - MW	190	
** UNIT DATA - BOILER AND STACK		
BOILER SUPPLIER	COMBUSTION ENGINEERING	
BOILER TYPE	PULVERIZED COAL	
BOILER SERVICE LOAD	******	
DESIGN BOILER FLUE GAS FLOW - CU.M/S	********	(******* ACFM)
BOILER FLUE GAS TEMPERATURE - C	*******	(**** F)
STACK HEIGHT - M	213.	(700 FT)
STACK SHELL	CONCRETE	
STACK TOP DIAMETER - M	*******	(***** FT)
** FUEL DATA		
FUEL TYPE	COAL	
FUEL GRADE	******	
AVERAGE HEAT CONTENT - J/G	27214.	(11700 BTU/LB)
RANGE HEAT CONTENT - BTU/LB		******
AVERAGE ASH CONTENT - %	14.00	
RANGE ASH CONTENT - %	******	
AVERAGE MOISTURE CONTENT - %	********	
RANGE MOISTURE CONTENT - %	6.0-7.0	
AVERAGE SULFUR CONTENT - %	2.00	
RANGE SULFUR CONTENT - %	******	
AVERAGE CHLORIDE CONTENT - %	********	
RANGE CHLORIDE CONTENT - %	******	
*** PARTICLE CONTROL		
** ESP		
TYPE	COLD SIDE	
** PARTICLE SCRUBBER		
INITIAL START-UP DATE	0/78	
GENERIC TYPE	VENTURI TOWER	
SPECIFIC TYPE	VARIABLE-THROAT/TOP-ENTRY PLUMB BOB	
TRADE NAME/COMMON NAME	N/A	
SHELL GENERIC MATERIAL	CARBON STEEL	
SHELL SPECIFIC MATERIAL	AISI 1110	
GAS CONTACTING DEVICE TYPE	NONE	
NUMBER OF CONTACTING ZONES	2	

PERFORMANCE DATA

PERIOD	MODULE	AVAILABILITY	OPERABILITY	RELIABILITY	UTILIZATION	% REMOVAL SO2	% REMOVAL PART.	PER HOURS	BOILER HOURS	FGD HOURS	CAP. FACTOR
10/79	SYSTEM	100.0		97.0				744	722	722	
11/79	SYSTEM	96.4		88.9				720	664	640	
12/79	SYSTEM	100.0		100.0				744	744	744	

PERFORMANCE DATA

PERIOD	MODULE	AVAILABILITY	OPERABILITY	RELIABILITY	UTILIZATION	% REMOVAL SO2	% REMOVAL PART.	PER HOURS	BOILER HOURS	FGD HOURS	CAP. FACTOR
	** PROBLEMS/SOLUTIONS/COMMENTS										
		A ONE DAY OUTAGE OCCURRED, DUE TO A FAN LINING PROBLEM. NO OTHER SCRUBBER UNIT PROBLEMS WERE ENCOUNTERED DURING THE PERIOD.									
1/80	SYSTEM	95.4	96.4		95.4			744	736	710	
	** PROBLEMS/SOLUTIONS/COMMENTS										
		IN JANUARY THE SCRUBBER WAS DOWN FOR THREE HOURS TO REPAIR A SLURRY RECYCLE LINE LEAK.									
		31 HOURS OF THE OUTAGE TIME IN JANUARY WAS NECESSARY TO REPAIR A RECYCLE PUMP.									
2/80	SYSTEM	100.0	100.0		100.0			696	696	696	
3/80	SYSTEM	96.9	96.9		96.9			744	744	721	
	** PROBLEMS/SOLUTIONS/COMMENTS										
		IN MARCH THE SCRUBBER WAS DOWN FOR A SCRUBBER LINING WARRANTY INSPECTION. NO REPAIR WORK WAS NECESSARY.									
4/80	SYSTEM							720			
5/80	SYSTEM							744			
6/80	SYSTEM							720			
	** PROBLEMS/SOLUTIONS/COMMENTS										
		DICKERSON 2 SCRUBBER DEPENDABILITY FACTORS WERE UNAVAILABLE FOR THE APRIL-JUNE PERIOD. THESE FIGURES SHOULD BE AVAILABLE BY THE THIRD QUARTER REPORT. THE UTILITY REPORTED THAT THE FGD SYSTEM OPERATED THE ENTIRE SECOND QUARTER WITH ESSENTIALLY 100% AVAILABILITY. NO SCRUBBER-RELATED PROBLEMS WERE REPORTED.									
7/80	SYSTEM							744			
8/80	SYSTEM							744			
9/80	SYSTEM							720			
	** PROBLEMS/SOLUTIONS/COMMENTS										
		THE UTILITY HAS NOT FIGURED OUT THE DEPENDABILITY FIGURES AS YET.									
		THE UTILITY REPORTED HAVING MINIMAL SCRUBBING SYSTEM PROBLEMS DURING THE JULY-SEPTEMBER PERIOD.									
		THE BOILER CAPACITY WAS REDUCED DURING PART OF THE PERIOD DUE TO A LINING FAILURE IN THE SCRUBBING SYSTEM PIPING.									
10/80	SYSTEM							744			
11/80	SYSTEM							720			
12/80	SYSTEM							744			

POTOMAC ELECTRIC POWER: DICKERSON 2 (CONT.)

PERIOD	MODULE	AVAILABILITY	OPERABILITY	RELIABILITY	UTILIZATION	% REMOVAL SO2	% REMOVAL PART.	PER HOURS	BOILER HOURS	FGD HOURS	CAP. FACTOR
		PERFORMANCE DATA									

** PROBLEMS/SOLUTIONS/COMMENTS

DURING THE OCTOBER THROUGH DECEMBER PERIOD THE BOILER WAS OPERATED AT A 60% (110 MW) CAPACITY DUE TO A LINING FAILURE IN THE SCRUBBING SYSTEM PIPING.

1/81	SYSTEM	96.9	92.8	100.0	81.9		744	654	607
2/81	SYSTEM	.0			.0		672	0	0
3/81	SYSTEM	.0			.0		744	0	0

** PROBLEMS/SOLUTIONS/COMMENTS

DICKERSON UNITS 1, 2 AND 3 WERE SHUT DOWN SO THAT THE STACK AND THE COMMON DUCT LEADING TO THE STACK COULD BE RELINED WITH PLASITE. UNIT 2 WAS SHUT DOWN ON JANUARY 31 AND REMAINED DOWN THROUGHOUT FEBRUARY AND MARCH DUE TO THESE REPAIRS.

SECTION 14
DESIGN AND PERFORMANCE DATA FOR OPERATIONAL PARTICLE SCRUBBERS

COMPANY NAME	POTOMAC ELECTRIC POWER	
PLANT NAME	DICKERSON	
UNIT NUMBER	3	
CITY	DICKERSON	
STATE	MARYLAND	
REGULATORY CLASSIFICATION	******	
PARTICULATE EMISSION LIMITATION - NG/J	******	(****** LB/MMBTU)
SO2 EMISSION LIMITATION - NG/J	688.	(1.600 LB/MMBTU)
NOX EMISSION LIMITATION - NG/J	******	(****** LB/MMBTU)
NET PLANT GENERATING CAPACITY - MW	549	
GROSS UNIT GENERATING CAPACITY - MW	190	
NET UNIT GENERATING CAPACITY W/FGD - MW	178	
NET UNIT GENERATING CAPACITY WO/FGD - MW	182	
EQUIVALENT SCRUBBED CAPACITY - MW	95	
** UNIT DATA - BOILER AND STACK		
BOILER SUPPLIER	COMBUSTION ENGINEERING	
BOILER TYPE	PULVERIZED COAL	
BOILER SERVICE LOAD	BASE	
DESIGN BOILER FLUE GAS FLOW - CU.M/S	278.42	(590000 ACFM)
BOILER FLUE GAS TEMPERATURE - C	126.1	(259 F)
STACK HEIGHT - M	213.	(700 FT)
STACK SHELL	CONCRETE	
STACK TOP DIAMETER - M	*******	(***** FT)
** FUEL DATA		
FUEL TYPE	COAL	
FUEL GRADE	BITUMINOUS	
AVERAGE HEAT CONTENT - J/G	27214.	(11700 BTU/LB)
RANGE HEAT CONTENT - BTU/LB		******
AVERAGE ASH CONTENT - %	14.00	
RANGE ASH CONTENT - %	******	
AVERAGE MOISTURE CONTENT - %	********	
RANGE MOISTURE CONTENT - %	6.0-7.0	
AVERAGE SULFUR CONTENT - %	2.00	
RANGE SULFUR CONTENT - %	******	
AVERAGE CHLORIDE CONTENT - %	********	
RANGE CHLORIDE CONTENT - %	******	
*** PARTICLE CONTROL		
** MECHANICAL COLLECTOR		
NUMBER	0	
TYPE	NONE	
** FABRIC FILTER		
NUMBER	0	
TYPE	NONE	
** PARTICLE SCRUBBER		
NUMBER	1	
INITIAL START-UP DATE	9/75	
GENERIC TYPE	VENTURI TOWER	
SPECIFIC TYPE	VARIABLE-THROAT/TOP-ENTRY PLUMB BOB	
TRADE NAME/COMMON NAME	N/A	
SUPPLIER	GE ENVIRONMENTAL SERVICES	
SHELL GENERIC MATERIAL	CARBON STEEL	
SHELL SPECIFIC MATERIAL	AISI 1110	
LINER SPECIFIC MATERIAL	FIBER-REINFORCED POLYESTER	
GAS CONTACTING DEVICE TYPE	NONE	
L/G RATIO - LITER/CU.M	2.7	(20.0 GAL/1000ACF)
PRESSURE DROP - KPA	2.7	(11.0 IN-H2O)
INLET GAS FLOW RATE - CU.M/S	139.2	(295000 ACFM)
INLET GAS TEMPERATURE - C	126.1	(259 F)
PARTICLE REMOVAL EFFICIENCY - %	99.0	
ENERGY CONSUMPTION - %	2.1	

POTOMAC ELECTRIC POWER: DICKERSON 3 (CONT.)

PERIOD	MODULE	AVAILABILITY	OPERABILITY	RELIABILITY	UTILIZATION	% REMOVAL SO2	% REMOVAL PART.	PER HOURS	BOILER HOURS	FGD HOURS	CAP. FACTOR
		PERFORMANCE DATA									
9/73	SYSTEM							720			
10/73	SYSTEM							744			
11/73	SYSTEM							720			
12/73	SYSTEM							744			
1/74	SYSTEM							744			

** PROBLEMS/SOLUTIONS/COMMENTS

PROBLEMS DURING THIS PERIOD RANGED FROM CORROSION LEAKS IN EXPANSION JOINTS TO PROBLEMS IN MATERIAL HANDLING EQUIPMENT, FEEDING AND SLAKING OF MGO, PLUGGING IN THE MGO MIX TANK AND SUCTION LINES TO THE MGO MAKE-UP PUMPS.

2/74	SYSTEM							672			
3/74	SYSTEM							744			
4/74	SYSTEM							720			
4/74	SYSTEM							720			

** PROBLEMS/SOLUTIONS/COMMENTS

MAINTENANCE AND MODIFICATIONS WERE PERFORMED ON THE SYSTEM. THE MAJOR SYSTEM REVISION MADE DURING THIS PERIOD WAS THE ADDITION OF A PRE-MIX TANK IN THE MGO SYSTEM.

5/74	SYSTEM							744			
6/74	SYSTEM							720			
7/74	SYSTEM							744			

** PROBLEMS/SOLUTIONS/COMMENTS

LIMITED OPERATION OCCURRED BECAUSE THE UTILITY DID NOT HAVE ACCESS TO THE EPA CALCINING FACILITY AT THE ESSEX CHEMICAL COMPANY SULFURIC ACID PLANT. BY THE END OF JUNE 1974, ALL THE MGO AT DICKERSON HAD BEEN USED AND A SILO PLUS THREE CARS WERE FULL OF MGSO3.

8/74	SYSTEM							744		87	
9/74	SYSTEM							720			
10/74	SYSTEM							744			
11/74	SYSTEM							720			
12/74	SYSTEM							744			

** PROBLEMS/SOLUTIONS/COMMENTS

DURING THIS PERIOD THE SYSTEM GENERALLY OPERATED AT 75 PERCENT OF THE DESIGN GAS FLOW.

1/75	SYSTEM							744			

PERIOD	MODULE	AVAILABILITY	OPERABILITY	RELIABILITY	UTILIZATION	% REMOVAL SO2	% REMOVAL PART.	PER HOURS	BOILER HOURS	FGD HOURS	CAP. FACTOR

** PROBLEMS/SOLUTIONS/COMMENTS

PROBLEMS DEVELOPED IN THE BUCKET ELEVATOR TRANSPORTING THE MGSO3 FROM THE DRYER TO THE STORAGE SILO.

2/75	SYSTEM		672
3/75	SYSTEM		744
4/75	SYSTEM		720
5/75	SYSTEM		744
6/75	SYSTEM		720
7/75	SYSTEM		744

** PROBLEMS/SOLUTIONS/COMMENTS

UNIT NO. 3 WAS TAKEN OUT OF SERVICE FOR AN 8 TO 12 WEEK TURBINE OVERHAUL. THE SCRUBBER WAS INSPECTED, MAINTENANCE AND MODIFICATIONS WERE MADE.

8/75	SYSTEM		744

** PROBLEMS/SOLUTIONS/COMMENTS

THE FGD SYSTEM CONSISTS OF A SINGLE, TWO-STAGE SCRUBBER/ABSORBER, WHICH INCORPORATES AN ADJUSTABLE-THROAT VENTURI SCRUBBER FOR PARTICULATE REMOVAL AND A SECOND STAGE ABSORBER WITH A FIXED VENTURI TO REMOVE SO2. THE LIQUOR STREAMS FOR BOTH STAGES ARE SEPARATE AND OPERATE IN A CLOSED-LOOP MODE. UNTIL MID-1975 THE MAGNESIUM SULFITE GENERATED WAS TRANSFERRED TO AN EPA FINANCED FACILITY AT THE ESSEX CHEMICAL COMPANY SULFURIC ACID MANUFACTURING PLANT IN RUMFORD, RHODE ISLAND WHERE MAGNESIUM OXIDE WAS REGENERATED AND SO2 FROM THE REGENERATION PROCESS WAS CONVERTED TO SULFURIC ACID. THE RUMFORD FACILITY HAS SINCE BEEN CLOSED DOWN.

CONSTRUCTION WAS COMPLETED IN AUGUST AND THE SYSTEM STARTED UP IN SEPTEMBER 1973. DURING INTERMITTENT OPERATIONS FOR SHAKEDOWN THROUGH JANUARY 1974, THE SYSTEM'S LONGEST CONTINUOUS RUN WAS 271 HOURS. THE SYSTEM HAS RE-STARTED FROM JULY THROUGH DECEMBER 1974, AND AGAIN ON AUGUST 11, 1975, FOR APPROXIMATELY 87 HOURS.

FGD UNIT OUTAGES WERE CAUSED PRIMARILY BY PIPE AND PUMP CORROSION AND MAJOR TURBINE OVERHAUL OF THE BOILER. PARTICULATE AND SO2 REMOVAL EFFICIENCY GUARANTEES WERE CORROBORATED DURING OPERATIONAL PHASES.

THE FGD SYSTEM WAS RESTARTED IN AUGUST. STEAM WAS LOST TO THE MGO MIX TANK, RESULTING IN A VERY MOIST PRODUCT FROM THE CENTRIFUGE. CAKING IN THE DRYER OCCURRED. AT THIS POINT, THE UTILITY DECIDED TO TEST ONLY THE FIRST-STAGE OF THE SCRUBBING SYSTEM, TAKING GAS AHEAD OF THE PRECIPITATOR. FGD OPERATION AT DICKERSON TERMINATED AT THIS POINT.

THE REMAINING SUPPLY OF MAGNESIUM OXIDE, ABOUT 100 TONS (10 DAYS), HAS BEEN DEPLETED, AND THE DICKERSON UNIT HAS BEEN TERMINATED AS A FGD SYSTEM.

9/75	SYSTEM		720
10/75	SYSTEM		744
11/75	SYSTEM		720
12/75	SYSTEM		744
1/76	SYSTEM		744

POTOMAC ELECTRIC POWER: DICKERSON 3 (CONT.)

PERIOD	MODULE	AVAILABILITY	OPERABILITY	RELIABILITY	UTILIZATION	% REMOVAL SO2	% REMOVAL PART.	PER HOURS	BOILER HOURS	FGD HOURS	CAP. FACTOR
		PERFORMANCE DATA									
2/76	SYSTEM							696			
3/76	SYSTEM							744			
4/76	SYSTEM							720			
5/76	SYSTEM							744			
6/76	SYSTEM							720			
7/76	SYSTEM							744			
8/76	SYSTEM							744			
9/76	SYSTEM							720			
10/76	SYSTEM							744			
11/76	SYSTEM							720			
12/76	SYSTEM							744			
1/77	SYSTEM							744			
2/77	SYSTEM							672			
3/77	SYSTEM							744			
4/77	SYSTEM							720			
5/77	SYSTEM							744			
6/77	SYSTEM							720			
7/77	SYSTEM							744			
8/77	SYSTEM							744			
9/77	SYSTEM							720			
10/77	SYSTEM							744			
11/77	SYSTEM							720			
12/77	SYSTEM							744			
1/78	SYSTEM							744			
2/78	SYSTEM	38.0	38.0		38.0			672	672	252	

** PROBLEMS/SOLUTIONS/COMMENTS

THERE HAVE BEEN MANY MAINTENANCE PROBLEMS AND PROBLEMS WITH LINER FAILURES. SINCE SHIFTING FROM SO2 TO PARTICULATE SCRUBBING ONLY, PLUGGING PROBLEMS HAVE NOT OCCURRED. LOW PH HAS CAUSED CORROSION WHICH WAS AGGRAVATED BY PARTICULATE ERROSION. THE UTILITY WILL PROBABLY RELINE WITH A FLAKE GLASS TYPE LINER. NO CHEMICALS (E.G. LIME) ARE ADDED TO THE CIRCULATING LIQUOR FOR PH BALANCE.

OUTAGE TIME WAS CAUSED BY LEAK REPAIRS IN SLURRY PIPING.

3/78	SYSTEM	21.0	22.0		21.0			744	717	156	

PERIOD	MODULE	AVAILABILITY	OPERABILITY	RELIABILITY	UTILIZATION	% REMOVAL SO2	% REMOVAL PART.	PER HOURS	BOILER HOURS	FGD HOURS	CAP. FACTOR
		PERFORMANCE DATA									

** PROBLEMS/SOLUTIONS/COMMENTS

OUTAGE TIME WAS DUE TO RUBBER LINING FAILURE IN THE RECYCLE PUMP DISCHARGE LINE.

4/78	SYSTEM	80.7	79.8		76.4		720	689	550

** PROBLEMS/SOLUTIONS/COMMENTS

26 HOURS OF OUTAGE TIME WERE DUE TO SMALL LEAKS IN PIPING.

5/78	SYSTEM	84.5	82.7		74.0		744	666	551

** PROBLEMS/SOLUTIONS/COMMENTS

A LEAK OCCURRED IN A MIST ELIMINATOR DRAIN.

THERE WAS A LEAK IN A BLEED LINE FOR THE SCRUBBER RECYCLE CIRCUIT.

OUTAGE TIME WAS REQUIRED FOR BLEED LINE REPLACEMENT.

6/78	SYSTEM	100.0	90.1		68.7		720	549	495
7/78	SYSTEM	100.0	.0		.0		744	16	0

** PROBLEMS/SOLUTIONS/COMMENTS

THE VENTURI SCRUBBER HAD AN AVAILABILITY OF 100% FOR JUNE AND JULY. THE ONLY VENTURI OUTAGE TIME WAS IN JUNE. THE OUTAGE TIME WAS REQUIRED TO TIE IN EQUIPMENT COMMON TO THE NEW UNIT AND UNIT 3.

THE BOILER WAS DOWN IN JULY FOR AN OVERHAUL.

THE REASON VENTURI HOURS CAN BE LOWER THAN BOILER HOURS WHEN THE VENTURI HAS A 100% AVAILABILITY IS BECAUSE THE VENTURI IS NOT OPERATED UNDER LOW LOAD CONDITIONS.

8/78	SYSTEM						744		
9/78	SYSTEM						720		
10/78	SYSTEM						744		
11/78	SYSTEM						720		
12/78	SYSTEM						744		
1/79	SYSTEM						744		
2/79	SYSTEM						672		
3/79	SYSTEM						744		
4/79	SYSTEM						720		
5/79	SYSTEM						744		

** PROBLEMS/SOLUTIONS/COMMENTS

SCRUBBER OUTAGE HOURS SINCE SEPTEMBER 1978 (I.E. SEPTEMBER 1978 THROUGH MAY 30, 1979) TOTAL 140. THE UTILITY INDICATED THAT IT IS NO LONGER ALLOWABLE TO BYPASS THE SCRUBBER WHEN PROBLEMS OCCUR, CLEANING THE PARTICULATE MATTER SOLELY WITH THE ESP. THE UTILITY MUST DROP THE BOILER LOAD SO THE

POTOMAC ELECTRIC POWER: DICKERSON 3 (CONT.)

PERIOD	MODULE	AVAILABILITY	OPERABILITY	RELIABILITY	UTILIZATION	% REMOVAL SO2	% REMOVAL PART.	PER HOURS	BOILER HOURS	FGD HOURS	CAP. FACTOR
			PERFORMANCE DATA								
		UNIT REMAINS IN COMPLIANCE. THERE HAVE BEEN NO PROBLEMS REPORTED FOR THE LAST FEW MONTHS. THE UTILITY IS KEEPING AHEAD OF PROBLEMS WITH A CONSCIENTIOUS INSPECTION AND MAINTENANCE PROGRAM.									
6/79	SYSTEM							720			
7/79	SYSTEM							744			
8/79	SYSTEM							744			
9/79	SYSTEM							720			
10/79	SYSTEM		98.6		95.4			744	720	710	
	** PROBLEMS/SOLUTIONS/COMMENTS										
		A TEN HOUR OUTAGE OCCURRED FOR REPAIRS OF A LEAD LINE LEAK.									
11/79	SYSTEM		95.2		88.8			720	672	640	
	** PROBLEMS/SOLUTIONS/COMMENTS										
		IN NOVEMBER, 8 HOURS OUTAGE TIME WAS REQUIRED TO REPAIR A LEAK IN A RECYCLE LINE.									
12/79	SYSTEM		96.1		93.5			744	724	696	
	** PROBLEMS/SOLUTICNS/COMMENTS										
		AN OUTAGE FOR GENERAL INSPECTION TOOK PLACE DURING DECEMBER.									
1/80	SYSTEM	78.7	88.2		78.7			744	664	586	
	** PROBLEMS/SOLUTIONS/COMMENTS										
		DURING JANUARY THE SCRUBBER WAS DOWN TO REPAIR THE FLAKEGLASS LINING.									
2/80	SYSTEM	100.0	100.0		100.0			696	696	696	
3/80	SYSTEM	100.0	100.0		100.0			744	744	744	
	** PROBLEMS/SOLUTIONS/COMMENTS										
		DURING FEBRUARY AND MARCH THE SCRUBBER OPERATED WITH NO MAJOR PROBLEMS.									
4/80	SYSTEM							720			
5/80	SYSTEM							744			
6/80	SYSTEM							720			
	** PROBLEMS/SOLUTIONS/COMMENTS										
		THE UNIT 3 SCRUBBER EXPERIENCED SOME DOWN TIME DURING THE APRIL-JUNE PERIOD AS A RESULT OF THE CONTINUING DETERIORATION OF THE SCRUBBER FLAKEGLASS LINING. THE UTILITY REPORTED THAT MAINTENANCE CREWS ARE PATCHING OLD PATCHES. A STUDY WILL BEGIN IN LATE JULY TO ESTABLISH THE OPTIMUM LINER MATERIAL AND APPLICATION STRATEGY FOR THE UNIT 3 SCRUBBING SYSTEM.									
7/80	SYSTEM							744			
8/80	SYSTEM							744			
9/80	SYSTEM							720			

PERIOD	MODULE	AVAILABILITY	OPERABILITY	RELIABILITY	UTILIZATION	% REMOVAL SO2	% REMOVAL PART.	PER HOURS	BOILER HOURS	FGD HOURS	CAP. FACTOR
		PERFORMANCE DATA									

** PROBLEMS/SOLUTIONS/COMMENTS

THE UTILITY HAS NOT FIGURED OUT THE DEPENDABILITY FIGURES AS YET.

THE UTILITY REPORTED HAVING MINIMAL SCRUBBING SYSTEM PROBLEMS DURING THE JULY-SEPTEMBER PERIOD.

THE BOILER CAPACITY WAS REDUCED TO 1/2 LOAD DURING PART OF THE PERIOD DUE TO THE NECESSARY PATCHING OF THE SCRUBBER LINING. THE UTILITY IS PRESENTLY STUDYING THE POSSIBILITY OF REPLACING THE FLAKEGLASS LINER WITH A RUBBER LINER.

10/80	SYSTEM							744			
11/80	SYSTEM							720			
12/80	SYSTEM							744			

** PROBLEMS/SOLUTIONS/COMMENTS

DURING THE OCTOBER THROUGH DECEMBER PERIOD THE BOILER WAS OPERATED AT A 60% (110 MW) CAPACITY DUE TO A LINING FAILURE IN THE SCRUBBING SYSTEM - PIPING.

UNIT 3 WILL BE SHUTDOWN ON FEBRUARY 2, 1981 TO REPLACE THE FLAKEGLASS LINING.

1/81	SYSTEM	96.8	96.9	97.5	94.2			744	723	701	
2/81	SYSTEM	.0			.0			672	0	0	
3/81	SYSTEM	.0			.0			744	0	0	

** PROBLEMS/SOLUTIONS/COMMENTS

DICKERSON UNITS 1, 2 AND 3 WERE SHUT DOWN SO THAT THE STACK AND THE COMMON DUCT LEADING TO THE STACK COULD BE RELINED WITH PLASITE. UNIT 3 WAS SHUT DOWN ON JANUARY 30 AND REMAINED DOWN THROUGHOUT FEBRUARY AND MARCH DUE TO THESE REPAIRS.

SECTION 14
DESIGN AND PERFORMANCE DATA FOR OPERATIONAL PARTICLE SCRUBBERS

COMPANY NAME	PUBLIC SERVICE OF COLORADO	
PLANT NAME	ARAPAHOE	
UNIT NUMBER	4	
CITY	DENVER	
STATE	COLORADO	
REGULATORY CLASSIFICATION	B	
PARTICULATE EMISSION LIMITATION - NG/J	43.	(.100 LB/MMBTU)
SO2 EMISSION LIMITATION - NG/J	******	(****** LB/MMBTU)
NOX EMISSION LIMITATION - NG/J	******	(****** LB/MMBTU)
NET PLANT GENERATING CAPACITY - MW	*****	
GROSS UNIT GENERATING CAPACITY - MW	112	
NET UNIT GENERATING CAPACITY W/FGD - MW	109	
NET UNIT GENERATING CAPACITY WO/FGD - MW	*****	
EQUIVALENT SCRUBBED CAPACITY - MW	112	
** UNIT DATA - BOILER AND STACK		
BOILER SUPPLIER	******	
BOILER TYPE	PULVERIZED COAL	
BOILER SERVICE LOAD	******	
DESIGN BOILER FLUE GAS FLOW - CU.M/S	245.39	(520000 ACFM)
BOILER FLUE GAS TEMPERATURE - C	148.9	(300 F)
STACK HEIGHT - M	******	(**** FT)
STACK SHELL	******	
STACK TOP DIAMETER - M	*******	(***** FT)
** FUEL DATA		
FUEL TYPE	COAL	
FUEL GRADE	SUBBITUMINOUS	
AVERAGE HEAT CONTENT - J/G	23725.	(10200 BTU/LB)
RANGE HEAT CONTENT - BTU/LB		******
AVERAGE ASH CONTENT - %	9.30	
RANGE ASH CONTENT - %	******	
AVERAGE MOISTURE CONTENT - %	13.70	
RANGE MOISTURE CONTENT - %	******	
AVERAGE SULFUR CONTENT - %	.95	
RANGE SULFUR CONTENT - %	0.6-1.0	
AVERAGE CHLORIDE CONTENT - %	.01	
RANGE CHLORIDE CONTENT - %	******	
** FUEL DATA		
FUEL TYPE	COAL	
FUEL GRADE	BITUMINOUS	
AVERAGE HEAT CONTENT - J/G	23493.	(10100 BTU/LB)
RANGE HEAT CONTENT - BTU/LB		******
AVERAGE ASH CONTENT - %	12.50	
RANGE ASH CONTENT - %	******	
AVERAGE MOISTURE CONTENT - %	11.20	
RANGE MOISTURE CONTENT - %	******	
AVERAGE SULFUR CONTENT - %	.65	
RANGE SULFUR CONTENT - %	******	
AVERAGE CHLORIDE CONTENT - %	.01	
RANGE CHLORIDE CONTENT - %	******	
*** PARTICLE CONTROL		
** MECHANICAL COLLECTOR		
NUMBER	1	
** FABRIC FILTER		
NUMBER	0	
TYPE	NONE	
** ESP		
NUMBER	1	
** PARTICLE SCRUBBER		
NUMBER	1	
INITIAL START-UP DATE	9/73	
GENERIC TYPE	PACKED TOWER	

PUBLIC SERVICE OF COLORADO: ARAPAHOE 4 (CONT.)

SPECIFIC TYPE	MOBILE BED PACKING	
TRADE NAME/COMMON NAME	TURBULENT CONTACT ABSORBER	
SUPPLIER	AIR CORRECTION DIVISION, UOP	
SHELL GENERIC MATERIAL	CARBON STEEL	
SHELL SPECIFIC MATERIAL	AISI 1110	
LINER GENERIC MATERIAL	ORGANIC	
LINER SPECIFIC MATERIAL	RUBBER	
GAS CONTACTING DEVICE TYPE	STAINLESS STEEL	
NUMBER OF CONTACTING ZONES	3	
L/G RATIO - LITER/CU.M	7.5	(56.0 GAL/1000ACF)
PH CONTROL ADDITIVE	ALKALINE FLYASH	
PRESSURE DROP - KPA	3.0	(12.0 IN-H2O)
SUPERFICIAL GAS VELOCITY - M/S	3.4	(11.0 FT/S)
INLET GAS FLOW RATE - CU.M/S	245.4	(520000 ACFM)
INLET GAS TEMPERATURE - C	151.7	(305 F)
SO2 REMOVAL EFFICENCY - %	30.0	
PARTICLE REMOVAL EFFICIENCY - %	93.0	

PERFORMANCE DATA

PERIOD	MODULE	AVAILABILITY	OPERABILITY	RELIABILITY	UTILIZATION	% REMOVAL SO2	% REMOVAL PART.	PER HOURS	BOILER HOURS	FGD HOURS	CAP. FACTOR
9/77	SYSTEM										

** PROBLEMS/SOLUTIONS/COMMENTS

SINCE STARTUP IN SEPTEMBER 1977 SCALING AND PLUGGING AT THE WET/DRY ZONE, ON THE FIRST STAGE GRIDS, AND IN THE REHEATERS HAVE BEEN THE MOST PROMINENT PROBLEM AREAS CHARACTERIZED BY THIS SYSTEM. VARIOUS CHEMICAL ADDITIVES HAVE BEEN TESTED FOR CONTROL OF SCALING, INCLUDING PHOSPHATED ESTERS, BUT WITHOUT SIGNIFICANT IMPROVEMENT. BLOWDOWN IS MAINTAINED AT A HIGH LEVEL TO CHECK THE BUILDUP OF SALTS BUT, OTHER THAN FOR TESTING PURPOSES, NO CHEMICAL CONTROL METHOD HAS BEEN USED TO CONTROL SCALE ACCUMULATION. OTHER OPERATING EXPERIENCES INCLUDE WEAR AND PERIODIC REPLACEMENT OF THE MOBILE BALLS, EROSION OF LINING AND CORROSIVE FAILURE OF REHEATERS. THE EROSION AND LINING FAILURE HAVE NOT BEEN A SERIOUS PROBLEM EXCEPT IN THE RECIRCULATING PUMPS.

10/79	SYSTEM							744			
11/79	SYSTEM							720			
12/79	SYSTEM							744			

** PROBLEMS/SOLUTIONS/COMMENTS

DURING THE FOURTH QUARTER REHEATER FAILURES OCCURRED.

LEAKAGE IN THE INLINE STEAM TUBES HAS BEEN ENCOUNTERED. CORROSION IS KNOWN TO OCCUR AFTER LEAKS ARE EXPERIENCED.

THE PRIMARY PROBLEM WITH THE SYSTEM IS THE INABILITY TO ISOLATE MODULES. IF A PROBLEM OCCURS NO MODULE MAINTENANCE CAN BE PERFORMED UNLESS THE UNIT LOAD IS CUT BACK OR THE UNIT IS SHUT DOWN.

1/80	SYSTEM							744			
2/80	SYSTEM							696			
3/80	SYSTEM							744			

** PROBLEMS/SOLUTIONS/COMMENTS

THE MODULE ISOLATION PROBLEMS CONTINUED THROUGH THE FIRST QUARTER OF 1980. USE OF THE CARBON STEEL DAMPERS HAS BEEN ABANDONED. THE PROGRAM FOR REPLACING THE DAMPERS HAS BEEN SUSPENDED INDEFINITELY. THE UNIT IS SHUTDOWN WHEN MAJOR SCRUBBER PROBLEMS OCCUR.

PUBLIC SERVICE OF COLORADO: ARAPAHOE 4 (CONT.)

PERIOD	MODULE	AVAILABILITY	OPERABILITY	RELIABILITY	UTILIZATION	% REMOVAL SO2	% REMOVAL PART.	PER HOURS	BOILER HOURS	FGD HOURS	CAP. FACTOR
				PERFORMANCE DATA							

REHEATER STEAM TUBE LEAKS ARE STILL CAUSING PROBLEMS. THE SIX STEAM COILS ON THIS IN-LINE REHEAT SYSTEM, TWO OF WHICH ARE 316SS AND FOUR OF WHICH ARE CARBON STEEL, ARE EXPERIENCING CORROSION PROBLEMS. A SOLUTION TO THE PROBLEM HAS NOT YET BEEN DETERMINED.

IN FEBRUARY THE UTILITY REPLACED THE SCRUBBER BALLS AND GRIDS. THE OLD BALLS WERE REPLACED WITH THE NEW HOLLOW HARD PLASTIC-WALLED BALLS WITH NOTCHED SEAMS. THE GRIDS WERE ORIGINALLY 316L SS, CERAMIC, POLYPROPYLENE, AND RUBBER LINED CARBON STEEL, BUT HAVE BEEN REPLACED WITH 317L SS GRIDS.

THE SCRUBBERS OPERATED CONTINUOUSLY THROUGHOUT THE QUARTER EXCEPT FOR THE BALL AND GRID REPLACEMENT DOWNTIME.

4/80	SYSTEM		100.0		100.0			720	720	720	
5/80	SYSTEM		100.0		100.0			744	744	744	
6/80	SYSTEM		100.0		100.0			720	720	720	

** PROBLEMS/SOLUTIONS/COMMENTS

BOTH BOILER AND SCRUBBERS OPERATED THE ENTIRE APRIL-JUNE PERIOD.

THE ISOLATION DAMPERS ARE STILL EFFECTIVELY INOPERABLE AND A REPLACEMENT PLAN AS YET HAS NOT BEEN REESTABLISHED.

THE UTILITY REPORTED THAT THE REHEATER TUBE LEAK PROBLEM CONTINUED THROUGH THE SECOND QUARTER. THE TUBES WILL BE ENTIRELY REPLACED WITH NEW 316L SS BUNDLES DURING THE NEXT SCHEDULED OUTAGE IN NOVEMBER AND DECEMBER. DURING THE SECOND QUARTER MORE TUBES WERE BLANKED OFF AFTER STEAM LEAKS OCCURRED. TO DATE ROUGHLY 50% OF THE TUBES ARE SEALED OFF AND ARE OUT OF SERVICE BECAUSE OF LEAKS THAT OCCURRED OVER THE PAST MONTHS.

7/80	SYSTEM	100.0	100.0	100.0	100.0			744	744	744	
8/80	SYSTEM	100.0	100.0	100.0	100.0			744	744	744	
9/80	SYSTEM	100.0	100.0	100.0	100.0			720	720	720	

** PROBLEMS/SOLUTIONS/COMMENTS

THE BOILER AND SCRUBBERS OPERATED ACCEPTABLY DURING THE JULY-SEPTEMBER PERIOD. NO PLANS HAVE BEEN MADE TO REPAIR THE ISOLATION DAMPERS. THE FAULTY REHEATER TUBES WILL BE REPLACED DURING THE SCHEDULED OUTAGE NOW SET FOR THE FIRST THREE WEEKS OF DECEMBER.

10/80	SYSTEM							744			
11/80	SYSTEM							720			
12/80	SYSTEM							744			

** PROBLEMS/SOLUTIONS/COMMENTS

DURING THE OCTOBER THROUGH DECEMBER PERIOD THE REHEATER TUBES WERE NOT REPLACED AND THE UNIT IS OPERATING WITHOUT REHEAT UNTIL THE NEXT SCHEDULED OUTAGE PERIOD IN FEBRUARY 1981.

NO MAJOR SCRUBBER RELATED PROBLEMS WERE ENCOUNTERED, EXCEPT THE REPLACEMENT OF THE DISCHARGE VALVE ON THE RECIRCULATION PUMP.

1/81	SYSTEM							744			
2/81	SYSTEM							672			

PUBLIC SERVICE OF COLORADO: ARAPAHOE 4 (CONT.)

PERIOD	MODULE	AVAILABILITY	OPERABILITY	RELIABILITY	UTILIZATION	% REMOVAL SO2	% REMOVAL PART.	PER HOURS	BOILER HOURS	FGD HOURS	CAP. FACTOR
3/81	SYSTEM							744			

** PROBLEMS/SOLUTIONS/COMMENTS

DURING THE SCHEDULED FOUR WEEK OUTAGE STARTING JANUARY 30 AND ENDING FEBRUARY 24, TWO NEW A-SIDE REHEATER BUNDLES WERE INSTALLED. THE UNIT WAS THEN RESTARTED.

THE UNIT HOWEVER HAD TO BE SHUT DOWN ON FEBRUARY 24 ONLY AFTER OPERATING 3 HOURS DUE TO OPERATOR ERROR. THE BOOSTER FAN WAS RESTARTED WITHOUT ITS OIL BEARING COOLING SYSTEM. CONSEQUENTLY, THE FAN BEARINGS WERE DAMAGE AND THE BOOSTER FAN HAD TO BE SHUT DOWN. THE UTILITY HAS SINCE REPAIRED THE FAN SHAFT BUT STILL AWAITS FOR THE REPAIRED FAN BEARINGS BEFORE THE UNIT CAN BE RESTARTED.

SECTION 14
DESIGN AND PERFORMANCE DATA FOR OPERATIONAL PARTICLE SCRUBBERS

COMPANY NAME	PUBLIC SERVICE OF COLORADO	
PLANT NAME	CHEROKEE	
UNIT NUMBER	1	
CITY	DENVER	
STATE	COLORADO	
REGULATORY CLASSIFICATION	B	
PARTICULATE EMISSION LIMITATION - NG/J	43.	(.100 LB/MMBTU)
SO2 EMISSION LIMITATION - NG/J	******	(****** LB/MMBTU)
NOX EMISSION LIMITATION - NG/J	******	(****** LB/MMBTU)
NET PLANT GENERATING CAPACITY - MW	710	
GROSS UNIT GENERATING CAPACITY - MW	115	
NET UNIT GENERATING CAPACITY W/FGD - MW	100	
NET UNIT GENERATING CAPACITY WO/FGD - MW	105	
EQUIVALENT SCRUBBED CAPACITY - MW	102	
** UNIT DATA - BOILER AND STACK		
BOILER SUPPLIER	BABCOCK & WILCOX	
BOILER TYPE	PULVERIZED COAL	
BOILER SERVICE LOAD	******	
DESIGN BOILER FLUE GAS FLOW - CU.M/S	245.39	(520000 ACFM)
BOILER FLUE GAS TEMPERATURE - C	146.1	(295 F)
STACK HEIGHT - M	******	(**** FT)
STACK SHELL	******	
STACK TOP DIAMETER - M	*******	(***** FT)
** FUEL DATA		
FUEL TYPE	COAL	
FUEL GRADE	BITUMINOUS	
AVERAGE HEAT CONTENT - J/G	23493.	(10100 BTU/LB)
RANGE HEAT CONTENT - BTU/LB		******
AVERAGE ASH CONTENT - %	12.50	
RANGE ASH CONTENT - %	9.4-12.5	
AVERAGE MOISTURE CONTENT - %	11.30	
RANGE MOISTURE CONTENT - %	******	
AVERAGE SULFUR CONTENT - %	.65	
RANGE SULFUR CONTENT - %	******	
AVERAGE CHLORIDE CONTENT - %	.01	
RANGE CHLORIDE CONTENT - %	******	
*** PARTICLE CONTROL		
** MECHANICAL COLLECTOR		
NUMBER	1	
** FABRIC FILTER		
NUMBER	0	
TYPE	NONE	
** ESP		
NUMBER	1	
** PARTICLE SCRUBBER		
NUMBER	1	
INITIAL START-UP DATE	6/73	
GENERIC TYPE	PACKED TOWER	
SPECIFIC TYPE	MOBILE BED PACKING	
TRADE NAME/COMMON NAME	TURBULENT CONTACT ABSORBER	
SUPPLIER	AIR CORRECTION DIVISION, UOP	
SHELL GENERIC MATERIAL	CARBON STEEL	
SHELL SPECIFIC MATERIAL	AISI 1110	
LINER GENERIC MATERIAL	ORGANIC	
LINER SPECIFIC MATERIAL	RUBBER	
GAS CONTACTING DEVICE TYPE	STAINLESS STEEL	
NUMBER OF CONTACTING ZONES	3	
L/G RATIO - LITER/CU.M	7.5	(56.0 GAL/1000ACF)
PH CONTROL ADDITIVE	ALKALINE FLYASH	
PRESSURE DROP - KPA	3.2	(13.0 IN-H2O)
SUPERFICIAL GAS VELOCITY - M/S	3.4	(11.0 FT/S)
INLET GAS FLOW RATE - CU.M/S	164.4	(348400 ACFM)

PUBLIC SERVICE OF COLORADO: CHEROKEE 1 (CONT.)

INLET GAS TEMPERATURE - C	146.1	(295 F)
SO2 REMOVAL EFFICIENCY - %	16.0	
PARTICLE REMOVAL EFFICIENCY - %	97.0	
ENERGY CONSUMPTION - %	4.3	

PERFORMANCE DATA

PERIOD	MODULE	AVAILABILITY	OPERABILITY	RELIABILITY	UTILIZATION	% REMOVAL SO2	% REMOVAL PART.	PER HOURS	BOILER HOURS	FGD HOURS	CAP. FACTOR
6/73	SYSTEM										

** PROBLEMS/SOLUTIONS/COMMENTS

SINCE STARTUP IN JUNE 1973 SCALING AND PLUGGING AT THE WET/DRY ZONE, ON THE FIRST STAGE GRIDS, AND IN THE REHEATERS HAVE BEEN THE MOST PROMINENT PROBLEM AREAS CHARACTERIZED BY THIS SYSTEM. VARIOUS CHEMICAL ADDITIVES HAVE BEEN TESTED FOR CONTROL OF SCALING, INCLUDING PHOSPHATED ESTERS, BUT WITHOUT SIGNIFICANT IMPROVEMENT. BLOWDOWN IS MAINTAINED AT A HIGH LEVEL TO CHECK THE BUILDUP OF SALTS BUT, OTHER THAN FOR TESTING PURPOSES NO CHEMICAL CONTROL METHOD HAS BEEN USED TO CONTROL SCALE ACCUMULATION. OTHER OPERATING EXPERIENCES INCLUDE WEAR AND PERIODIC REPLACEMENT OF THE MOBILE BALLS, EROSION OF LINING AND CORROSIVE FAILURE OF REHEATERS. THE EROSION AND LINING FAILURE HAVE NOT BEEN A SERIOUS PROBLEM EXCEPT IN THE RECIRCULATING PUMPS.

10/79	SYSTEM							744			
11/79	SYSTEM							720			
12/79	SYSTEM							744			

** PROBLEMS/SOLUTIONS/COMMENTS

DURING THE PERIOD ID FAN FAILURES HAVE OCCURRED DUE TO EROSION FROM THE FLYASH.

THE ISOLATION DAMPER HAS BEEN A PROBLEM DUE TO FREEZE UPS MAKING IT INOPERATIVE.

REHEATER FAILURES HAVE OCCURRED DUE TO PLUGGING OF THE HOT AIR INJECTION STEAM COILS.

THE SCRUBBER EXIT DUCTWORK WILL BE REPAIRED TEMPORARILY WITH A SPRAY ON FIBERGLASS-LIKE MATERIAL.

1/80	SYSTEM			100.0		100.0		744	744	744	
2/80	SYSTEM			100.0		100.0		696	696	696	
3/80	SYSTEM			100.0		100.0		744	744	744	

** PROBLEMS/SOLUTIONS/COMMENTS

THE SCRUBBERS OPERATED CONTINUOUSLY THROUGHOUT THE FIRST QUARTER OF 1980.

THE ISOLATION DAMPERS HAVE NOT CAUSED ANY PROBLEMS BECAUSE MODULE ISOLATION WAS NOT REQUIRED DURING THE PERIOD.

THE FANS ARE STILL EXPERIENCING EROSION PROBLEMS.

IN MARCH A BOILER/SCRUBBER OVERHAUL BEGAN. DURING THIS TIME THE CARBON STEEL ISOLATION DAMPERS WILL BE REPLACED WITH 316 SS. THE NEW FANS WILL BE INSTALLED IN THE OLD HOUSINGS. THE NEW HIGH STRENGTH CARBON STEEL FANS WILL BE EQUIPPED WITH REPLACABLE CHROMIUM ALLOY WEAR PLATE BLADE TIPS.

4/80	SYSTEM							720			
5/80	SYSTEM							744			

PUBLIC SERVICE OF COLORADO: CHEROKEE 1 (CONT.)

PERIOD	MODULE	AVAILABILITY	OPERABILITY	RELIABILITY	UTILIZATION	% REMOVAL SO2	% REMOVAL PART.	PER HOURS	BOILER HOURS	FGD HOURS	CAP. FACTOR
6/80	SYSTEM							720			

** PROBLEMS/SOLUTIONS/COMMENTS

THE 1B ID FAN WAS SEVERELY ERRODED. THE FAN WAS REBUILT DURING THE OUTAGE.

THE OLD CARBON STEEL ISOLATION DAMPERS WERE REPLACED WITH 316 SS DAMPERS DURING THE CONTINUING MAY-JULY OUTAGE.

7/80	SYSTEM							744			
8/80	SYSTEM							744			
9/80	SYSTEM							720			

** PROBLEMS/SOLUTIONS/COMMENTS

SHAFT BEARING FAILURES ON THE RECIRCULATION PUMP CAUSED SCRUBBER SYSTEM PROBLEMS THROUGHOUT THE JULY-SEPTEMBER PERIOD.

10/80	SYSTEM							744			
11/80	SYSTEM							720			
12/80	SYSTEM							744			

** PROBLEMS/SOLUTIONS/COMMENTS

THE UTILITY REPORTED NO MAJOR PROBLEMS WERE ENCOUNTERED DURING THE OCTOBER THROUGH DECEMBER PERIOD. HOWEVER, SHAFT BEARING REPAIRS WERE MADE TO THE RECIRCULATION PUMPS.

1/81	SYSTEM							744			

** PROBLEMS/SOLUTIONS/COMMENTS

DURING THE MONTH OF JANUARY THE UNIT WAS SHUT DOWN FOR THE ENTIRE MONTH FOR A GENERAL SCRUBBER OVERHAUL. THE OVERHAUL INCLUDED THE REPLACEMENT OF THE SCRUBBER BALLS AND REPAIR WORK TO THE SCRUBBER BALL PARTITIONS.

2/81	SYSTEM							672			

** PROBLEMS/SOLUTIONS/COMMENTS

UTILITY REPORTED THAT NO SCRUBBER RELATED PROBLEMS OCCURRED DURING THE MONTH OF FEBRUARY.

3/81	SYSTEM							744			

** PROBLEMS/SOLUTIONS/COMMENTS

DURING PART OF MARCH THE UNIT WAS FORCED TO SHUT DOWN DUE TO A FROZEN GUILLOTINE INLET DAMPER.

SECTION 14
DESIGN AND PERFORMANCE DATA FOR OPERATIONAL PARTICLE SCRUBBERS

COMPANY NAME	PUBLIC SERVICE OF COLORADO	
PLANT NAME	CHEROKEE	
UNIT NUMBER	4	
CITY	DENVER	
STATE	COLORADO	
REGULATORY CLASSIFICATION	B	
PARTICULATE EMISSION LIMITATION - NG/J	43.	(.100 LB/MMBTU)
SO2 EMISSION LIMITATION - NG/J	******	(****** LB/MMBTU)
NOX EMISSION LIMITATION - NG/J	******	(****** LB/MMBTU)
NET PLANT GENERATING CAPACITY - MW	710	
GROSS UNIT GENERATING CAPACITY - MW	375	
NET UNIT GENERATING CAPACITY W/FGD - MW	350	
NET UNIT GENERATING CAPACITY WO/FGD - MW	375	
EQUIVALENT SCRUBBED CAPACITY - MW	356	
** UNIT DATA - BOILER AND STACK		
BOILER SUPPLIER	COMBUSTION ENGINEERING	
BOILER TYPE	PULVERIZED COAL	
BOILER SERVICE LOAD	******	
DESIGN BOILER FLUE GAS FLOW - CU.M/S	717.29	(1520000 ACFM)
BOILER FLUE GAS TEMPERATURE - C	135.0	(275 F)
STACK HEIGHT - M	******	(**** FT)
STACK SHELL	******	
STACK TOP DIAMETER - M	*******	(***** FT)
** FUEL DATA		
FUEL TYPE	COAL	
FUEL GRADE	BITUMINOUS	
AVERAGE HEAT CONTENT - J/G	23493.	(10100 BTU/LB)
RANGE HEAT CONTENT - BTU/LB		******
AVERAGE ASH CONTENT - %	12.50	
RANGE ASH CONTENT - %	9.4-12.5	
AVERAGE MOISTURE CONTENT - %	11.30	
RANGE MOISTURE CONTENT - %	******	
AVERAGE SULFUR CONTENT - %	.65	
RANGE SULFUR CONTENT - %	******	
AVERAGE CHLORIDE CONTENT - %	.01	
RANGE CHLORIDE CONTENT - %	******	
*** PARTICLE CONTROL		
** MECHANICAL COLLECTOR		
NUMBER	1	
** FABRIC FILTER		
NUMBER	0	
TYPE	NONE	
** ESP		
NUMBER	1	
** PARTICLE SCRUBBER		
NUMBER	4	
INITIAL START-UP DATE	7/74	
GENERIC TYPE	PACKED TOWER	
SPECIFIC TYPE	MOBILE BED PACKING	
TRADE NAME/COMMON NAME	TURBULENT CONTACT ABSORBER	
SUPPLIER	AIR CORRECTION DIVISION, UOP	
SHELL GENERIC MATERIAL	CARBON STEEL	
SHELL SPECIFIC MATERIAL	AISI 1110	
LINER GENERIC MATERIAL	ORGANIC	
LINER SPECIFIC MATERIAL	RUBBER	
GAS CONTACTING DEVICE TYPE	STAINLESS STEEL	
NUMBER OF CONTACTING ZONES	3	
L/G RATIO - LITER/CU.M	7.5	(56.0 GAL/1000ACF)
PH CONTROL ADDITIVE	ALKALINE FLYASH	
PRESSURE DROP - KPA	3.2	(13.0 IN-H2O)
SUPERFICIAL GAS VELOCITY - M/S	3.4	(11.0 FT/S)
SO2 REMOVAL EFFICENCY - %	16.0	

PUBLIC SERVICE OF COLORADO: CHEROKEE 4 (CONT.)

PARTICLE REMOVAL EFFICIENCY - % 97.0
ENERGY CONSUMPTION - % 6.7

PERFORMANCE DATA

PERIOD	MODULE	AVAILABILITY	OPERABILITY	RELIABILITY	UTILIZATION	% REMOVAL SO2	% REMOVAL PART.	PER HOURS	BOILER HOURS	FGD HOURS	CAP. FACTOR
7/74	SYSTEM										

** PROBLEMS/SOLUTIONS/COMMENTS

SINCE STARTUP IN JULY 1974 SCALING AND PLUGGING AT THE WET/DRY ZONE, ON THE FIRST STAGE GRIDS, AND IN THE REHEATERS HAVE BEEN THE MOST PROMINENT PROBLEM AREAS CHARACTERIZED BY THIS SYSTEM. VARIOUS CHEMICAL ADDITIVES HAVE BEEN TESTED FOR CONTROL OF SCALING, INCLUDING PHOSPHATED ESTERS, BUT WITHOUT SIGNIFICANT IMPROVEMENT. BLOWDOWN IS MAINTAINED AT A HIGH LEVEL TO CHECK THE BUILDUP OF SALTS BUT, OTHER THAN FOR TESTING PURPOSES NO CHEMICAL CONTROL METHOD HAS BEEN USED TO CONTROL SCALE ACCUMULATION. OTHER OPERATING EXPERIENCES INCLUDE WEAR AND PERIODIC REPLACEMENT OF THE MOBILE BALLS, EROSION OF LINING AND CORROSIVE FAILURE OF REHEATERS. THE EROSION AND LINING FAILURE HAVE NOT BEEN A SERIOUS PROBLEM EXCEPT IN THE RECIRCULATING PUMPS.

10/79	SYSTEM							744			
11/79	SYSTEM							720			
12/79	SYSTEM							744			

** PROBLEMS/SOLUTIONS/COMMENTS

DURING THE PERIOD ID FAN FAILURES HAVE OCCURRED DUE TO EROSION FROM THE FLYASH.

THE ISOLATION DAMPER HAS BEEN A PROBLEM DUE TO FREEZE UPS MAKING IT INOPERATIVE.

REHEATER FAILURES HAVE OCCURRED DUE TO PLUGGING OF THE HOT AIR INJECTION STEAM COILS.

THE SCRUBBER EXIT DUCTWORK WILL BE REPAIRED TEMPORARILY WITH A SPRAY ON FIBERGLASS LIKE MATERIAL.

1/80	SYSTEM							744			
2/80	SYSTEM							696			
3/80	SYSTEM							744			

** PROBLEMS/SOLUTIONS/COMMENTS

THE OUTLET DUCT WORK IS BEING REBUILT INTERNALLY WITH FIBERGLASS FOR STRUCTURAL SUPPORT AND ACID RESISTANCE. WITH REGULAR MAINTENANCE THE UTILITY EXPECTS THIS TO PROVE TO BE A PERMANENT SOLUTION TO THE EROSION/ CORROSION PROBLEM.

THE OLD FANS ARE BEING REPLACED WITH HIGH STRENGTH CARBON STEEL FANS HAVING REPLACABLE CHROMIUM ALLOY WEAR PLATE BLADE TIPS.

4/80	SYSTEM							720			
5/80	SYSTEM							744			
6/80	SYSTEM							720			

PUBLIC SERVICE OF COLORADO: CHEROKEE 4 (CONT.)

PERIOD	MODULE	AVAILABILITY	OPERABILITY	RELIABILITY	UTILIZATION	% REMOVAL SO2	% REMOVAL PART.	PER HOURS	BOILER HOURS	FGD HOURS	CAP. FACTOR
					PERFORMANCE DATA						

** PROBLEMS/SOLUTIONS/COMMENTS

THE NEW FANS DESCRIBED DURING THE LAST REPORT PERIOD WERE INSTALLED IN ONE OF THE FOUR MODULES. NEW FANS WILL BE INSTALLED IN THE OTHER THREE MODULES DURING A SCHEDULED LATE SEPTEMBER OUTAGE UNLESS THE UTILITY HAS AN OPPORTUNITY TO MAKE THE REPLACEMENTS SOONER.

7/80	SYSTEM							744			

** PROBLEMS/SOLUTIONS/COMMENTS

THE SCRUBBER RETURNED TO SERVICE IN MID JULY AFTER A TWO WEEK OUTAGE. DURING THIS TIME, THE FIBERGLASS INSIDE THE DUCTWORK WAS REPLACED, AND A VERTICAL GRID WAS INSTALLED ON THE SECOND LEVEL OF THE MOBILE BED TOWER TO IMPROVE SYSTEM PERFORMANCE.

8/80	SYSTEM							744			
9/80	SYSTEM							720			

** PROBLEMS/SOLUTIONS/COMMENTS

THE BOILER AND FGD SYSTEM WENT DOWN ON SEPTEMBER 15, 1980 FOR A SCHEDULED OVERHAUL. DURING THIS TIME, FANS WERE INSTALLED ON MODULES A, C, AND D.

THE UTILITY IS CURRENTLY EVALUATING THE VERTICAL GRID ON THE SECOND LAYER. IF THE GRID IMPROVES SYSTEM PERFORMANCE, THEY WILL INSTALL ANOTHER ONE ON THE THIRD LEVEL.

10/80	SYSTEM							744			
11/80	SYSTEM							720			
12/80	SYSTEM							744			

** PROBLEMS/SOLUTIONS/COMMENTS

UNIT 4 EXPERIENCED SOME MINOR REHEATER LEAKAGE PROBLEMS DURING THE PERIOD.

DURING THE FOURTH QUARTER OF 1980 THE UTILITY REPORTED THAT PROBLEMS WERE ENCOUNTERED WHEN VERITICAL GRIDS WERE INSTALLED ON THE SCRUBBER BED. THIS WAS INTENDED TO SOLVE THE PROBLEM OF KEEPING THE SCRUBBER BALLS FROM MOVING HORIZONTALLY, RESULTING IN PILES OF SCRUBBER BALLS IN LOCALIZED AREAS, BUT CORROSION AND SYSTEM PERFORMANCE DID NOT IMPROVE.

1/81	SYSTEM							744			
2/81	SYSTEM							672			
3/81	SYSTEM							744			

** PROBLEMS/SOLUTIONS/COMMENTS

THROUGHOUT THE JANUARY-MARCH PERIOD THE UTILITY INTERMITTENTLY SHUT DOWN THE SCRUBBER MODULES (ONE MODULE AT A TIME) TO REPLACE SCRUBBER BALLS AND REPAIR SCRUBBER BALL PARTITIONS.

THE UTILITY REPORTED EXPERIENCING CORROSION PROBLEMS WITH THE FOUR SCRUBBER BOOSTER FANS.

SECTION 14
DESIGN AND PERFORMANCE DATA FOR OPERATIONAL PARTICLE SCRUBBERS

COMPANY NAME	PUBLIC SERVICE OF COLORADO	
PLANT NAME	VALMONT	
UNIT NUMBER	5	
CITY	VALMONT	
STATE	COLORADO	
REGULATORY CLASSIFICATION	E	
PARTICULATE EMISSION LIMITATION - NG/J	43.	(.100 LB/MMBTU)
SO2 EMISSION LIMITATION - NG/J	******	(****** LB/MMBTU)
NOX EMISSION LIMITATION - NG/J	******	(****** LB/MMBTU)
NET PLANT GENERATING CAPACITY - MW	274	
GROSS UNIT GENERATING CAPACITY - MW	166	
NET UNIT GENERATING CAPACITY W/FGD - MW	157	
NET UNIT GENERATING CAPACITY WO/FGD - MW	163	
EQUIVALENT SCRUBBED CAPACITY - MW	166	
** UNIT DATA - BOILER AND STACK		
BOILER SUPPLIER	COMBUSTION ENGINEERING	
BOILER TYPE	PULVERIZED COAL	
BOILER SERVICE LOAD	BASE	
DESIGN BOILER FLUE GAS FLOW - CU.M/S	436.98	(926000 ACFM)
BOILER FLUE GAS TEMPERATURE - C	126.7	(260 F)
STACK HEIGHT - M	******	(**** FT)
STACK SHELL	******	
STACK TOP DIAMETER - M	*******	(***** FT)
** FUEL DATA		
FUEL TYPE	COAL	
FUEL GRADE	SUBBITUMINOUS	
AVERAGE HEAT CONTENT - J/G	25121.	(10800 BTU/LB)
RANGE HEAT CONTENT - BTU/LB		******
AVERAGE ASH CONTENT - %	6.00	
RANGE ASH CONTENT - %	5.4-7.0	
AVERAGE MOISTURE CONTENT - %	15.00	
RANGE MOISTURE CONTENT - %	12.7-18.3	
AVERAGE SULFUR CONTENT - %	.70	
RANGE SULFUR CONTENT - %	0.6-0.7	
AVERAGE CHLORIDE CONTENT - %	********	
RANGE CHLORIDE CONTENT - %	******	
*** PARTICLE CONTROL		
** MECHANICAL COLLECTOR		
NUMBER	1	
INLET FLUE GAS CAPACITY - CU.M/S	218.5	(463000 ACFM)
** FABRIC FILTER		
NUMBER	0	
TYPE	NONE	
** ESP		
NUMBER	1	
TYPE	COLD SIDE	
INLET FLUE GAS CAPACITY - CU.M/S	218.5	(463000 ACFM)
** PARTICLE SCRUBBER		
NUMBER	2	
INITIAL START-UP DATE	11/71	
GENERIC TYPE	PACKED TOWER	
SPECIFIC TYPE	MOBILE BED PACKING	
TRADE NAME/COMMON NAME	TURBULENT CONTACT ABSORBER	
SUPPLIER	AIR CORRECTION DIVISION, UOP	
SHELL GENERIC MATERIAL	CARBON STEEL	
SHELL SPECIFIC MATERIAL	AISI 1110	
LINER GENERIC MATERIAL	ORGANIC	
LINER SPECIFIC MATERIAL	RUBBER	
GAS CONTACTING DEVICE TYPE	STAINLESS STEEL	
NUMBER OF CONTACTING ZONES	3	
L/G RATIO - LITER/CU.M	7.8	(58.3 GAL/1000ACF)
PH CONTROL ADDITIVE	LIMESTONE/ALKALINE FLYASH	

PUBLIC SERVICE OF COLORADO: VALMONT 5 (CONT.)

PRESSURE DROP - KPA	3.7	(15.0 IN-H2O)
SUPERFICIAL GAS VELOCITY - M/S	3.4	(11.0 FT/S)
INLET GAS FLOW RATE - CU.M/S	109.2	(231500 ACFM)
INLET GAS TEMPERATURE - C	132.8	(271 F)
SO2 REMOVAL EFFICENCY - %	45.0	
PARTICLE REMOVAL EFFICIENCY - %	96.0	
ENERGY CONSUMPTION - %	3.6	

PERFORMANCE DATA

PERIOD	MODULE AVAILABILITY	OPERABILITY	RELIABILITY	UTILIZATION	% REMOVAL SO2	% REMOVAL PART.	PER HOURS	BOILER HOURS	FGD HOURS	CAP. FACTOR
11/71	SYSTEM						720			

** PROBLEMS/SOLUTIONS/COMMENTS

THE FIRST PARTICLE MATTER SCRUBBER COMMENCED OPERATION IN NOVEMBER 1971. THE SCRUBBER WAS ORIGINALLY INSTALLED FOR PARTICLE MATTER REMOVAL SINCE THE PLANT BURNS LOW SULFUR COAL; HOWEVER, 45% OF THE SO2 IS REMOVED AS WELL BECAUSE OF THE ALKALINITY OF THE FLYASH.

DURING THE FIRST YEAR OF OPERATION PROBLEMS INCLUDED DIFFICULTIES WITH THE MODULE PACKING GRID SUPPORT, GENERAL VESSEL SCALE FORMATION, FLOW DISTRIBUTION PROBLEMS, BALL BREAKAGE, SCALING IN THE MIST ELIMINATOR SECTION, AND PLUGGING OF THE REHEATER. SCALE FORMATION WAS THE MOST PREDOMINANT CONTINUING MAJOR CAUSE OF DOWNTIME IN THE SCRUBBER. SCALE ACCUMULATION WAS NOTED ON THE WET-DRY INTERFACE IMMEDIATELY DOWNSTREAM OF THE PRESATURATION NOZZLES. SCALE ALSO ACCUMULATED HEAVILY ON THE UNDERSIDE OF THE FIRST LAYER OF GRID BARS.
SCALE ON THE UPPER GRID BARS WAS LESS PREVALENT AS THE ACTION OF THE "PING PONG" BALLS TENDED TO KEEP THE SCALE OFF OF THESE SECTIONS. SCALE ALSO COLLECTED ON THE WALLS OF THE VESSEL AND INTERMITTENTLY SLOUGHED OFF AND FELL INTO THE SUMP IN LARGE PIECES CAUSING BLOCKAGE OF THE RECIRCULATION PUMP SUCTION SCREENS. SCALING OF THE MIST ELIMINATOR ABATED SOMEWHAT WITH THE INTRODUCTION OF A CLEAR RINSE WATER WASH. SCALE FORMATION IN THE REHEAT SECTION SOMETIMES REQUIRED SUPPLEMENTAL CLEANING OF THE REHEATER IN ADDITION TO THE CLEANING OBTAINED BY THE USE OF THE SOOTBLOWERS WHICH WERE INSTALLED AS A PART OF THE REHEATER EQUIPMENT. UNDER NORMAL OPERATION, THE SOOTBLOWERS LOCATED IN THIS REHEAT SECTION WERE FAIRLY SUCCESSFUL IN REMOVING THE ACCUMULATION OF THE SCALE IN THE REHEATER.
ALTHOUGH MANY OF THE INITIAL START-UP PROBLEMS WERE SOLVED OVER A PERIOD OF TIME, THE CALCIUM SULFATE-FLYASH SCALING CONTINUED TO BE A SIGNIFICANT OPERATING PROBLEM AT THE VALMONT INSTALLATION. IN ADDITION TO THESE SCALING RELIABILITY PROBLEMS, A WATER QUALITY CONCERN ALSO SURFACED THAT WAS A DIRECT RESULT OF THE PARTICLE SCRUBBER OPERATION. THE RELATIVELY HIGH CAO CONCENTRATION IN THE VALMONT FLYASH RESULTED IN FAIRLY HIGH SO2 REMOVAL RATES (45-50 PERCENT) WITHIN THE UNITS. SINCE NO PH CONTROL CAPABILITY FOR EITHER THE RECIRCULATING SLURRY OR THE SYSTEM BLOWDOWN SLURRY WAS DESIGNED INTO THE SYSTEM, AN ACID CONDITION WAS CREATED IN THE SLURRY AND THE BLOWDOWN STREAM. PH LEVELS OF THE BLOWDOWN NORMALLY RANGED BETWEEN 1.7 AND 2.0. ALTHOUGH THE STREAM WAS NEUTRALIZED TO A DEGREE BY ALKALINE FLYASH, PSCO FELT THAT IT WAS IMPORTANT TO INVESTIGATE VARIOUS CONTROL MEASURES WHICH COULD BE APPLIED TO THIS STREAM. THE CALCIUM SULFATE SCALING PROBLEM WAS THOUGHT TO BE THE RESULT OF A SUPER-SATURATED CALCIUM SULFATE CONDITION IN THE RECIRCULATING SLURRY. BECAUSE OF THIS IT WAS FELT THAT CONTINUOUS PH CONTROL OF THE RECIRCULATING SLURRY, CONVERSION OF THE SYSTEM TO CLOSED LOOP OPERATION AND ESTABLISHING A HIGHER CONCENTRATION OF SEEDING SOLIDS IN THE RECIRCULATION SLURRY (THEREBY CONTROLLING THE SCALING PROBLEMS WITHOUT CHEMICAL ADDITIVES) WOULD BE NECESSARY MEASURES.
FOR PH CONTROL, LIMESTONE WAS TESTED INITIALLY, THEN LIME WAS UTILIZED FOR THE ALKALI REAGENT. IN THE FIRST TEST, SINCE LIMESTONE UTILIZATION WAS A MAJOR CONCERN, A SPECIAL EFFORT WAS MADE TO REDUCE THE POTENTIAL FOR THE SHORT CIRCUITING OF THE ADDED LIMESTONE AND TO PROVIDE SUFFICIENT RESIDENCE TIME IN THE REACTOR SECTION OF THE SYSTEM. BY UTILIZING FOUR REACTION MIX TANKS IN SERIES, PLUG FLOW WAS EXPECTED TO BE MORE CLOSELY SIMULATED. TO MAINTAIN A CLOSED LOOP SYSTEM WHERE THE QUANTITY OF WATER REMOVED FROM THE SYSTEM WAS HELD TO A MINIMUM, FOUR SYSTEM DESIGN FEATURES WERE UTILIZED.

1. UTILIZATION OF A COMBINATION OF POND SUPERNATANT AND MAKE-UP WATER

PUBLIC SERVICE OF COLORADO: VALMONT 5 (CONT.)

PERIOD	MODULE	AVAILABILITY	OPERABILITY	RELIABILITY	UTILIZATION	% REMOVAL SO2	PER PART.	BOILER HOURS	FGD HOURS	CAP. FACTOR

FOR RECYCLE WATER.
2. PRESATURATION OF THE INCOMING FLUE GAS WITH RECIRCULATING SLURRY.
3. INTERMITTENT MIST ELIMINATOR WASH.
4. PROPER SELECTION OF MATERIALS OF CONSTRUCTION TO PROTECT AGAINST ATTACK CAUSED BY HIGH CHLORIDE CONCENTRATIONS.

THE SCRUBBERS R & D FACILITY WAS NOT EQUIPPED WITH A MECHANICAL THICKENER FOR CONTROL OF THE SUSPENDED SOLIDS CONCENTRATION OF THE RECIRCULATING SLURRY (ALL PURGED MATERIAL WAS SENT TO THE SLUDGE POND). WITH A 500 PPM SO2 CONCENTRATION IN THE FLUE GAS, IT IS EXPECTED THAT THE RECIRCULATING SLURRY SOLIDS COULD BE REALLY CONTROLLED IN THE 5 TO 7 PERCENT RANGE. DUE TO THE MIXED FUEL FIRED AT THE UNIT DURING THE TEST PERIOD, HOWEVER, THE SO2 CONCENTRATIONS EMITTED FROM THE BOILER AND HENCE PRESENT IN THE FLUE GAS STREAM VARIED SIGNIFICANTLY AND FINALLY FELL TO SUCH LOW LEVELS (OFTEN 100-200 PPM) THAT SUSPENDED SOLIDS CONCENTRATIONS IN THE SLURRY COULD NOT BE MAINTAINED. IT IS ALMOST CERTAIN THAT A THICKENER, WITH THE SUBSEQUENT RETURN OF SOLIDS TO THE SCRUBBER LIQUOR, COULD HAVE BEEN USED TO GOOD ADVANTAGE DURING THIS TIME PERIOD. GENERALLY SPEAKING, THE SEVERE SCALING CONDITIONS PLAGUING THE TEST MODULE WERE INTENSIFIED DURING THESE PERIODS OF LOW INLET SO2 CONDITION.

11/74	SYSTEM							720		
12/74	SYSTEM							744		
1/75	SYSTEM							744		
2/75	SYSTEM							672		
3/75	SYSTEM							744		

** PROBLEMS/SOLUTIONS/COMMENTS

THE FGD SCRUBBING SYSTEM WAS OPERATED FOR A TOTAL OF FOUR AND ONE-HALF MONTHS, FROM MID-OCTOBER 1974 TO MARCH 1975. THE OVERALL RELIABILITY OF THE SYSTEM WAS APPROXIMATELY 75%.

4/75	SYSTEM							720		
5/75	SYSTEM							744		
6/75	SYSTEM							720		
7/75	SYSTEM							744		
8/75	SYSTEM							744		
9/75	SYSTEM							720		
10/75	SYSTEM							744		
11/75	SYSTEM							720		
12/75	SYSTEM							744		
1/76	SYSTEM							744		
2/76	SYSTEM							696		
3/76	SYSTEM							744		
4/76	SYSTEM							720		
5/76	SYSTEM									
6/76	SYSTEM							720		

PUBLIC SERVICE OF COLORADO: VALMONT 5 (CONT.)

PERIOD	MODULE	AVAILABILITY	OPERABILITY	RELIABILITY	UTILIZATION	% REMOVAL SO2	% REMOVAL PART.	PER HOURS	BOILER HOURS	FGD HOURS	CAP. FACTOR
		PERFORMANCE DATA									
7/76	SYSTEM							744			
8/76	SYSTEM							744			
9/76	SYSTEM							720			
10/76	SYSTEM							744			
11/76	SYSTEM							720			
12/76	SYSTEM							744			
1/77	SYSTEM							744			
2/77	SYSTEM							672			
3/77	SYSTEM							744			
4/77	SYSTEM							720			
5/77	SYSTEM							744			
6/77	SYSTEM							720			
7/77	SYSTEM							744			
8/77	SYSTEM							744			
9/77	SYSTEM							720			
10/77	SYSTEM							744			
11/77	SYSTEM							720			
12/77	SYSTEM							744			
1/78	SYSTEM							744			
2/78	SYSTEM							672			
3/78	SYSTEM							744			

** PROBLEMS/SOLUTIONS/COMMENTS

THERE HAVE BEEN RECURRING PROBLEMS ASSOCIATED WITH BALL MIGRATION IN THE BALL COMPARTMENT AS WELL AS RECIRCULATION PUMP MOTOR BEARING FAILURE, AND WEAR AND FAILURE IN THE BALL COMPARTMENT LINING. THERE HAVE BEEN CONTINUAL PROBLEMS WITH REHEATER PLUGGING. THERE ALSO HAVE BEEN EXPANSION JOINT FAILURES AT BOTH THE INLET AND OUTLET OF THE SCRUBBER.
MORE RECENTLY THERE WAS A PINCH BELT FAILURE.
THE SCRUBBING SYSTEM HAS HAD AN AVAILABILITY RANGE OF 50 TO 78% WITH AN AVERAGE OF 66%.

4/78	SYSTEM							720			
5/78	SYSTEM							744			

** PROBLEMS/SOLUTIONS/COMMENTS

NO SIGNIFICANT PROBLEMS WERE ENCOUNTERED.

6/78	SYSTEM							720			
7/78	SYSTEM							744			

PUBLIC SERVICE OF COLORADO: VALMONT 5 (CONT.)

PERIOD	MODULE	AVAILABILITY	OPERABILITY	RELIABILITY	UTILIZATION	% REMOVAL SO2	% REMOVAL PART.	PER HOURS	BOILER HOURS	FGD HOURS	CAP. FACTOR
		PERFORMANCE DATA									
8/78	SYSTEM							744			

** PROBLEMS/SOLUTIONS/COMMENTS

THE UTILITY HAD NO COMMENTS FOR THIS PERIOD.

9/78	SYSTEM							720			
10/78	SYSTEM							744			
11/78	SYSTEM							720			
12/78	SYSTEM							744			
1/79	SYSTEM							744			
2/79	SYSTEM							672			
3/79	SYSTEM							744			
4/79	SYSTEM							720			
5/79	SYSTEM							744			
6/79	SYSTEM							720			

** PROBLEMS/SOLUTIONS/COMMENTS

AVERAGE SCRUBBER AVAILABILITY FROM START UP THROUGH APRIL 1979 WAS 64.42%.
AVERAGE SCRUBBER AVAILABILITY FOR 1978 WAS 66.85%.
AVERAGE SCRUBBER AVAILABILITY FROM JANUARY 1, 1979 THROUGH MAY, 1979 WAS APPROXIMATELY 80%.

BALL MIGRATION, ALTHOUGH NOT SERIOUS, IS A CHRONIC PROBLEM FOR VALMONT 5.

EROSION AND CORROSION HAVE OCCURRED ON THE SCRUBBER GRID BAR AREA (PACKING SUPPORT).

EROSION/CORROSION IS EVIDENT IN THE MIST ELIMINATOR SECTION.

EROSION/CORROSION OCCURRS IN THE REHEATER AREA AND SOOT BLOWER.

THE UTILITY HAD TO REPLACE INLET AND OUTLET EXPANSION JOINTS.

REHEATER PLUGGING HAS BEEN A PROBLEM.

RECYCLE PUMP BEARING FAILURES OCCURRED.

THE JACK SCREW DRIVE HAS BEEN MALFUNCTIONING ON INLET AND OUTLET ISOLATION DAMPERS.

7/79	SYSTEM							744			
8/79	SYSTEM							744			
9/79	SYSTEM							720			

** PROBLEMS/SOLUTIONS/COMMENTS

DURING THE ANNUAL SHUTDOWN IN SEPTEMBER THE OLD SCRUBBER BALLS WERE REPLACED WITH A NEW BRAND. DUE TO BALL MOTION THE RUBBER LINER ERODED.

IN THE MIST ELIMINATOR SECTION EROSION AND CORROSION OCCURRED.

PUBLIC SERVICE OF COLORADO: VALMONT 5 (CONT.)

PERIOD	MODULE	AVAILABILITY	OPERABILITY	RELIABILITY	UTILIZATION	% REMOVAL SO2	% REMOVAL PART.	PER HOURS	BOILER HOURS	FGD HOURS	CAP. FACTOR
10/79	SYSTEM	100.0						744			
11/79	SYSTEM	92.3						720			
12/79	SYSTEM	98.1						744			

** PROBLEMS/SOLUTIONS/COMMENTS

ONE OF THE MAJOR SCRUBBING SYSTEM PROBLEMS IS THE SCRUBBER WALL WEAR WHICH HAS TO BE PATCHED DURING THE SPRING AND FALL.

REHEATER PLUGGING HAS BEEN A CHRONIC PROBLEM.

THE UTILITY HAS REPORTED THE FOLLOWING ANNUAL AVAILABILITIES FOR THE UNIT.
1972 - 1978: 64.3%
1972 - 1979: 65.9%
1978: 66.8%
1979: 80.5%

1/80	A	98.5									
	B	98.5									
	SYSTEM	98.5						744			
2/80	A	84.4									
	B	94.9									
	SYSTEM	89.7						696			
3/80	A	90.8									
	B	87.7									
	SYSTEM	89.0						744	615		

** PROBLEMS/SOLUTIONS/COMMENTS

DURING THE FIRST QUARTER OF 1980, NO MAJOR PROBLEMS WERE ENCOUNTERED WITH THE SCRUBBER.

4/80	A	88.1									
	B	88.1									
	SYSTEM	88.1						720	716		

** PROBLEMS/SOLUTIONS/COMMENTS

THE SCRUBBER WAS SHUT DOWN ON APRIL 14 FOR A WEEK TO MAKE REPAIRS TO A HOLE IN THE SCRUBBER RUBBER LINING, RECYCLE PUMP LININGS AND A STEAM REGULATOR ON ONE OF THE REHEATERS.

5/80	A	96.8									
	B	100.0									
	SYSTEM	98.4						744	744		

** PROBLEMS/SOLUTIONS/COMMENTS

NO PROBLEMS WERE REPORTED FOR MAY.

6/80	A	8.0									
	B	8.0									
	SYSTEM	8.0						720	720		

** PROBLEMS/SOLUTIONS/COMMENTS

DURING JUNE THE SCRUBBER WAS FORCED OUT OF SERVICE WHEN AN INBOARD FAN PEDISTLE BEARING FAILED. THE BEARING SECTION WAS REBUILT.

PUBLIC SERVICE OF COLORADO: VALMONT 5 (CONT.)

PERIOD	MODULE	AVAILABILITY	OPERABILITY	RELIABILITY	UTILIZATION	% REMOVAL SO2	% REMOVAL PART.	PER HOURS	BOILER HOURS	FGD HOURS	CAP. FACTOR
				PERFORMANCE DATA							

WHILE FAN REPAIRS WERE IN PROGRESS EXTENSIVE MAINTENANCE WAS PERFORMED ON THE SCRUBBER. MAINTENANCE WORK INCLUDED COMPLETE BALL REPLACEMENT. ADDITIONAL REPAIR WORK ON THE SCRUBBER LINER, REPAIR OF HOLES IN THE TOWER SHELL AND OF A RUPTURED MIST ELIMINATOR WASH LINE AND THE REHEATER WAS CLEANED.

DAMPER JAMMING AT VALMONT HAS OCCURRED PERIODICALLY. SOMETIMES DAMPERS DO NOT READILY CLOSE. THE OPERATOR MUST MOVE THE DAMPER UP AND DOWN UNTIL THE GUILLOTINE SEATS. BECAUSE OF CONTINUOUS FLY ASH ACCUMULATION IT APPEARS THAT THE DAMPERS MUST BE EXERCISED FREQUENTLY TO PREVENT JAMMING.

7/80	5A		48.3		46.6				
	5B		48.3		46.6				
	SYSTEM		48.3		46.6		744	719	347

** PROBLEMS/SOLUTIONS/COMMENTS

THE SCRUBBER SYSTEM WAS SHUT DOWN BECAUSE OF SCRUBBER BOOSTER FAN BEARING FAILURE.

8/80	5A		87.5		84.8				
	5B		95.6		92.6				
	SYSTEM		91.5		87.7		744	721	660

** PROBLEMS/SOLUTIONS/COMMENTS

THE RECIRCULATION PUMP MOTOR BEARING FAILED CAUSING SOME MINOR OUTAGE TIME IN AUGUST.

9/80	SYSTEM				.0		720	0	0

** PROBLEMS/SOLUTIONS/COMMENTS

THE BOILER AND SCRUBBER WERE SHUT DOWN DURING SEPTEMBER FOR SCHEDULED MAINTENANCE.

10/80	SYSTEM						744		
11/80	SYSTEM						720		
12/80	SYSTEM						744		

** PROBLEMS/SOLUTIONS/COMMENTS

THE SCRUBBER REMAINED OUT OF SERVICE THROUGHOUT THE OCTOBER-DECEMBER PERIOD AND IS EXPECTED TO START UP AT THE END OF JANUARY. LATE START UP OF THE SCRUBBER IS DUE TO A MANPOWER SHORTAGE. THE BOILER AND TURBINE RETURNED TO SERVICE IN MID-DECEMBER.

1/81	SYSTEM						744		
2/81	SYSTEM						672		
3/81	SYSTEM						744		

** PROBLEMS/SOLUTIONS/COMMENTS

SCRUBBER CAME BACK ON-LINE AT THE END OF JANUARY AND OPERATED THROUGHOUT THE MONTHS OF FEBRUARY AND MARCH WITHOUT ANY MAJOR SCRUBBER RELATED PROBLEMS.

SECTION 14
DESIGN AND PERFORMANCE DATA FOR OPERATIONAL PARTICLE SCRUBBERS

COMPANY NAME	SOUTHWESTERN PUBLIC SERVICE	
PLANT NAME	HARRINGTON	
UNIT NUMBER	1	
CITY	AMARILLO	
STATE	TEXAS	
REGULATORY CLASSIFICATION	B	
PARTICULATE EMISSION LIMITATION - NG/J	43.	(.100 LB/MMBTU)
SO2 EMISSION LIMITATION - NG/J	516.	(1.200 LB/MMBTU)
NOX EMISSION LIMITATION - NG/J	******	(****** LB/MMBTU)
NET PLANT GENERATING CAPACITY - MW	360	
GROSS UNIT GENERATING CAPACITY - MW	360	
NET UNIT GENERATING CAPACITY W/FGD - MW	320	
NET UNIT GENERATING CAPACITY WO/FGD - MW	*****	
EQUIVALENT SCRUBBED CAPACITY - MW	360	
** UNIT DATA - BOILER AND STACK		
BOILER SUPPLIER	COMBUSTION ENGINEERING	
BOILER TYPE	PULVERIZED COAL	
BOILER SERVICE LOAD	BASE	
DESIGN BOILER FLUE GAS FLOW - CU.M/S	778.63	(1650000 ACFM)
BOILER FLUE GAS TEMPERATURE - C	176.7	(350 F)
STACK HEIGHT - M	76.	(250 FT)
STACK SHELL	CONCRETE	
STACK TOP DIAMETER - M	8.2	(27.0 FT)
** FUEL DATA		
FUEL TYPE	COAL	
FUEL GRADE	SUBBITUMINOUS	
AVERAGE HEAT CONTENT - J/G	19538.	(8400 BTU/LB)
RANGE HEAT CONTENT - BTU/LB		8000-8900
AVERAGE ASH CONTENT - %	5.00	
RANGE ASH CONTENT - %	4.5-6.0	
AVERAGE MOISTURE CONTENT - %	27.10	
RANGE MOISTURE CONTENT - %	25.0-30.0	
AVERAGE SULFUR CONTENT - %	.42	
RANGE SULFUR CONTENT - %	0.4-0.5	
AVERAGE CHLORIDE CONTENT - %	********	
RANGE CHLORIDE CONTENT - %	******	
*** PARTICLE CONTROL		
** ESP		
NUMBER	1	
TYPE	COLD SIDE	
SUPPLIER	RESEARCH-COTTRELL	
INLET FLUE GAS CAPACITY - CU.M/S	778.6	(1650000 ACFM)
INLET FLUE GAS TEMPERATURE - C	168.3	(335 F)
PRESSURE DROP - KPA	.1	(1. IN-H2O)
PARTICLE REMOVAL EFFICENCY - %	95.0	
** PARTICLE SCRUBBER		
NUMBER	6	
GENERIC TYPE	PACKED TOWER	
SPECIFIC TYPE	STATIC BED PACKING	
TRADE NAME/COMMON NAME	MARBLE-BED SCRUBBER	
SUPPLIER	COMBUSTION ENGINEERING	
DIMENSIONS - FT	24.0 X 25.0	
SHELL GENERIC MATERIAL	CARBON STEEL	
SHELL SPECIFIC MATERIAL	AISI 1110	
LINER GENERIC MATERIAL	ORGANIC	
GAS CONTACTING DEVICE TYPE	GLASS MARBLES	
NUMBER OF CONTACTING ZONES	1	
LIQUID RECIRCULATION RATE - LITER/S	444.1	(7050 GPM)
L/G RATIO - LITER/CU.M	3.1	(23.0 GAL/1000ACF)
PH CONTROL ADDITIVE	LIMESTONE	
SUPERFICIAL GAS VELOCITY - M/S	2.4	(8.0 FT/S)
INLET GAS FLOW RATE - CU.M/S	141.6	(300000 ACFM)
INLET GAS TEMPERATURE - C	60.0	(140 F)
PARTICLE REMOVAL EFFICIENCY - %	50.0	

SOUTHWESTERN PUBLIC SERVICE: HARRINGTON 1 (CONT.)

PERIOD	MODULE	AVAILABILITY	OPERABILITY	RELIABILITY	UTILIZATION	% REMOVAL SO2	% REMOVAL PART.	PER HOURS	BOILER HOURS	FGD HOURS	CAP. FACTOR
		PERFORMANCE DATA									
10/79	SYSTEM							744			
11/79	SYSTEM							720			
12/79	SYSTEM							744			

** PROBLEMS/SOLUTIONS/COMMENTS

DURING OCTOBER THROUGH DECEMBER, TWO SPRAY PUMP MOTORS FAILED.

THE FRP FLUSH PIPING HAS FAILED CAUSING SOME LEAKING.

PLUGGING IN ONE MARBLE BED WAS ENCOUNTERED WHEN THE CHEMISTRY CONTROL WAS TEMPORARILY LOST.

THE CONE SHAPED EXPANDED METAL (316L SS) SCREENS COVERING THE BED DRAIN PIPES HAVE ERODED AWAY FROM BALL MOVEMENT. THE MARBLE BALLS HAVE BEEN DROPPING INTO THE RECYCLE TANK. WHERE THE UTILITY HAS REPLACED THE METAL SCREEN WITH EXPANDED PLASTIC SCREEN, EROSION HAS NOT OCCURRED.

1/80	SYSTEM							744			
2/80	SYSTEM							696			
3/80	SYSTEM							744			

** PROBLEMS/SOLUTIONS/COMMENTS

DURING THE FIRST QUARTER OF 1980 THE MIST ELIMINATOR WASH PIPING RUPTURED CAUSING PLUGGING IN SCRUBBERS 4 AND 5. THE UTILITY PLANS TO REPLACE ALL FRP PIPING WITH STEEL. THE RUPTURE ON NO. 5 ALSO DAMAGED THE WATER SUPPLY HEADER.

THE MARBLE BED PLUGGING REPORTED DURING THE LAST QUARTER IS NOT YET COMPLETELY CLEARED. THE SOFT SCALE IS GRADUALLY GOING BACK INTO THE SOLUTION. THE PLATE AREA IS CLEAN.

THE DUCT BENEATH THE REHEATER TUBING ON ONE OF THE MODULES HAS CORRODED TO THE POINT THAT HOLES HAVE FORMED. SCALE AND MOISTURE WERE FOUND ON THE PLATE WHERE THE CORROSION FORMED. THE PLATE WAS REMOVED AND A NEW CARBON STEEL PLATE WAS WELDED IN. NO OTHER REHEATER DUCTS HAVE EXPERIENCED ANY SCALE OR MOISTURE ACCUMULATION.

4/80	SYSTEM							720			

** PROBLEMS/SOLUTIONS/COMMENTS

A PUMP LINER FAILURE OCCURRED IN APRIL. THE IMPELLER SHAFT LINER WAS REPAIRED AND REPLACED.

5/80	SYSTEM							744			

** PROBLEMS/SOLUTIONS/COMMENTS

THE BOILER WAS SHUT DOWN A FEW DAYS IN LATE APRIL AND 12 TO 14 DAYS IN EARLY MAY FOR AIR PREHEATER REPAIRS.

DURING APRIL AND MAY THE SCRUBBING SYSTEM EXPERIENCED AGITATOR PROBLEMS. THE RECENT PROBLEMS HAVE BEEN RELATED TO BEARING FAILURE, HOWEVER, THE SEALS HAVE BEEN LEAKING AS WELL. THE AGITATORS AT THIS FACILITY ARE SIDE MOUNTED. THE AGITATOR SHAFT ENTERS THE TANK AT ROUGHLY 12 FT BELOW THE FLUID SURFACE. IT APPEARS THAT THE SEAL LEAKING MAY BE ATTRIBUTABLE TO FAULTY INSTALLATION.

PERIOD	MODULE	AVAILABILITY	OPERABILITY	RELIABILITY	UTILIZATION	% REMOVAL SO2	% REMOVAL PART.	PER HOURS	BOILER HOURS	FGD HOURS	CAP. FACTOR
6/80	SYSTEM	92.1						720	696		79.3

** PROBLEMS/SOLUTIONS/COMMENTS

DURING JUNE THE SCRUBBER EXHIBITED AN AVAILABILITY OF 92.1%. THERE WAS GREATER SCRUBBER CAPACITY AVAILABLE THAN REQUIRED BY THE BOILER. NO PROBLEMS WERE REPORTED FOR JUNE.

DAMPER PROBLEMS REPORTED PREVIOUSLY HAVE BEEN ELIMINATED. THE OLD OPERATOR MECHANISMS WERE REPLACED WITH OPERATORS SUPPLIED BY ANOTHER MANUFACTURER.

ONE OF THE MARBLE BEDS IS STILL PARTIALLY PLUGGED. THE MATERIAL SEEMS TO BE HARD CALCIUM SULFATE SCALE. THE SCALE WILL PROBABLY NOT CLEAR FURTHER THROUGH DISSOLUTION DURING NORMAL SCRUBBER OPERATIONS AS HAD BEEN HOPED. ALTHOUGH THE MODULE MUST OPERATE AT LOWER THAN DESIGN GAS FLOW SCRUBBER OPERATIONS ARE NOT HAMPERED OVERALL BECAUSE THE SYSTEM HAS SOME DESIGN SPARE CAPACITY..

THE REHEATER PROBLEM REPORTED PREVIOUSLY HAS OCCURRED ON THREE REHEATERS NOW. THE FAILURE OF THE REHEATER DUCT BOTTOM PANELS MAY BE A RESULT OF AN UNDERSIZED DEFLECTION SHIELD BENEATH THE TUBE BANKS. IT IS ALSO POSSIBLE THAT THE DUCTING WAS IMPROPERLY WELDED.

7/80	SYSTEM							744			
8/80	SYSTEM							744			
9/80	SYSTEM							720			

** PROBLEMS/SOLUTIONS/COMMENTS

THE UTILITY REPORTED THAT NO MAJOR SCRUBBING SYSTEM PROBLEMS OCCURRED DURING THE THIRD QUARTER 1980.

THE PROBLEM REPORTED EARLIER WITH THE MIST ELIMINATOR WASH PIPING IS PRESENTLY BEING SOLVED BY REPLACING THE PIPING WITH CARBON STEEL.

10/80	SYSTEM							744			
11/80	SYSTEM							720			
12/80	SYSTEM							744			

** PROBLEMS/SOLUTIONS/COMMENTS

DURING THE OCTOBER THROUGH DECEMBER PERIOD REPLACEMENT OF THE MIST ELIMINATOR WASH PIPING WITH CARBON STEEL CONTINUED; AS THE OLD PIPING WEARS OUT AND MAINTENANCE TIME PERMITS.

DURING LATE DECEMBER, THE SLURRY SPRAY PUMP HOUSING CRACKED DURING A BACK FLUSH. THIS WAS THE SECOND TIME IN TWO YEARS THAT THIS PROBLEM HAD OCCURRED.

1/81	SYSTEM							744			

** PROBLEMS/SOLUTIONS/COMMENTS

THE UTILITY REPORTED THAT AT THE BEGINNING OF THE YEAR THE SCRUBBER SYSTEM BEGAN TO SEE VOLUMES OF FLUE GAS GREATER THAN THAT PRODUCED BY THE BOILER. IT WAS LATER DISCOVERED THAT THE EXPANSION JOINTS LOCATED AT THE ESP HAD CRACKED AND WERE ALLOWING AMBIENT AIR TO ENTER THE SYSTEM. THE UTILITY REPORTED THEY HAD ORIGINALLY ORDERED VITRON EXPANSION JOINTS BUT INSTEAD RECEIVED CHLOROBUTYL JOINTS WHICH SUBSEQUENTLY FAILED. DUE TO THE IN-

SOUTHWESTERN PUBLIC SERVICE: HARRINGTON 1 (CONT.)

PERIOD	MODULE	AVAILABILITY	OPERABILITY	RELIABILITY	UTILIZATION	% REMOVAL SO2	% REMOVAL PART.	FEP HOURS	BOILER HOURS	FGD HOURS	CAP. FACTOR
2/81	SYSTEM							672			
3/81	SYSTEM							744			

CREASED GAS LOAD THE UTILITY HAS HAD TO RUN MORE MODULES THAN NORMALLY NECESSARY FOR A GIVEN BOILER LOAD. THE UTILITY PLANS TO REPLACE THE EXPANSION JOINTS DURING THE NEXT SCHEDULED OUTAGE IN MAY.

** PROBLEMS/SOLUTIONS/COMMENTS

MODULE 3 WAS SHUT DOWN FOR 24 HOURS TO REPLACE A RUBBER PUMP LINER WHICH HAD BEEN WORN AWAY BY THE PUMP IMPELLERS.

EXCEPT FOR THE PUMP LINER AND EXPANSION JOINT FAILURES THE SCRUBBER SYSTEM OPERATED WELL THROUGHOUT THE JANUARY-MARCH PERIOD.

SECTION 15
DESIGN AND PERFORMANCE DATA FOR OPERATIONAL FOREIGN FGD SYSTEMS

COMPANY NAME	CHUGOKU ELECTRIC	
PLANT NAME	SHIMONOSEKI	
UNIT NUMBER	1	
CITY	SHIMONOSEKI	
COUNTRY	JAPAN	
REGULATORY CLASSIFICATION	******	
PARTICULATE EMISSION LIMITATION - NG/J	******	(****** LB/MMBTU)
SO2 EMISSION LIMITATION - NG/J	219.	(.510 LB/MMBTU)
NOX EMISSION LIMITATION - NG/J	******	(****** LB/MMBTU)
NET PLANT GENERATING CAPACITY - MW	575	
GROSS UNIT GENERATING CAPACITY - MW	175	
NET UNIT GENERATING CAPACITY W/FGD - MW	*****	
NET UNIT GENERATING CAPACITY WO/FGD - MW	*****	
EQUIVALENT SCRUBBED CAPACITY - MW	175	
** UNIT DATA - BOILER AND STACK		
BOILER SUPPLIER	MITSUBISHI	
BOILER TYPE	PULVERIZED COAL	
BOILER SERVICE LOAD	BASE	
DESIGN BOILER FLUE GAS FLOW - CU.M/S	266.27	(564255 ACFM)
BOILER FLUE GAS TEMPERATURE - C	130.0	(266 F)
STACK HEIGHT - M	200.	(656 FT)
STACK SHELL	CONCRETE	
STACK TOP DIAMETER - M	3.0	(9.7 FT)
** FUEL DATA		
FUEL TYPE	COAL	
FUEL GRADE	******	
AVERAGE HEAT CONTENT - J/G	25046.	(10768 BTU/LB)
RANGE HEAT CONTENT - BTU/LB		******
AVERAGE ASH CONTENT - %	24.60	
RANGE ASH CONTENT - %	******	
AVERAGE MOISTURE CONTENT - %	2.30	
RANGE MOISTURE CONTENT - %	******	
AVERAGE SULFUR CONTENT - %	.59	
RANGE SULFUR CONTENT - %	******	
AVERAGE CHLORIDE CONTENT - %	.04	
RANGE CHLORIDE CONTENT - %	0.01-0.11	
*** PARTICLE CONTROL		
** MECHANICAL COLLECTOR		
TYPE	MULTICLONES	
SUPPLIER	MITSUBISHI	
** FABRIC FILTER		
NUMBER	0	
TYPE	NONE	
** ESP		
NUMBER	1	
TYPE	COLD SIDE	
SUPPLIER	MITSUBISHI HEAVY INDUSTRIES	
INLET FLUE GAS CAPACITY - CU.M/S	246.1	(521589 ACFM)
INLET FLUE GAS TEMPERATURE - C	140.0	(284 F)
PRESSURE DROP - KPA	.8	(3. IN-H2O)
** PARTICLE SCRUBBER		
NUMBER	1	
GENERIC TYPE	SPRAY TOWER	
SPECIFIC TYPE	NR	
TRADE NAME/COMMON NAME	NR	
SUPPLIER	MITSUBISHI	
SHELL GENERIC MATERIAL	CARBON STEEL	
SHELL SPECIFIC MATERIAL	AISI 1110	
LINER GENERIC MATERIAL	ORGANIC	
LINER SPECIFIC MATERIAL	RUBBER	
GAS CONTACTING DEVICE TYPE	NONE	
NUMBER OF CONTACTING ZONES	1	

CHUGOKU ELECTRIC: SHIMONOSEKI 1 (CONT.)

LIQUID RECIRCULATION RATE - LITER/S	544.3	(8640 GPM)
L/G RATIO - LITER/CU.M	3.0	(22.5 GAL/1000ACF)
SUPERFICIAL GAS VELOCITY - M/S	13.1	(43.0 FT/S)
INLET GAS FLOW RATE - CU.M/S	203.7	(431725 ACFM)

*** FGD SYSTEM

** GENERAL DATA

SALEABLE PRODUCT/THROWAWAY PRODUCT	SALEABLE PRODUCT
SO2 REMOVAL MODE	WET SCRUBBING
PROCESS TYPE	LIMESTONE
PROCESS ADDITIVES	NONE
SYSTEM SUPPLIER	MITSUBISHI HEAVY INDUSTRIES
A-E FIRM	MITSUBISHI
DEVELOPMENT LEVEL	FULL SCALE
NEW/RETROFIT	RETROFIT
UNIT DESIGN SO2 REMOVAL EFFICIENCY - %	85.00
CURRENT STATUS	1
COMMERCIAL START-UP	7/79
INITIAL START-UP	5/79
CONTRACT AWARDED	5/77

** DESIGN AND OPERATING PARAMETERS

** QUENCHER/PRESATURATOR

CONSTRUCTION MATERIAL GENERIC TYPE	NR
CONSTRUCTION MATERIAL SPECIFIC TYPE	NR

** ABSORBER

NUMBER	1	
NUMBER OF SPARES	0	
GENERIC TYPE	COMBINATION	
SPECIFIC TYPE	NR	
TRADE NAME/COMMON TYPE	N/A	
SUPPLIER	MITSUBISHI	
SHELL GENERIC MATERIAL	CARBON STEEL	
SHELL SPECIFIC MATERIAL	AISI 1110	
SHELL MATERIAL TRADE NAME/COMMON TYPE	N/A	
LINER GENERIC MATERIAL	ORGANIC	
LINER SPECIFIC MATERIAL	NR	
LINER MATERIAL TRADE NAME/COMMON TYPE	NR	
NUMBER OF CONTACTING ZONES	4	
LIQUID RECIRCULATION RATE - LITER/S	2722.	(43200 GPM)
GAS-SIDE PRESSURE DROP - KPA	1.0	(3.9 IN-H2O)
SUPERFICAL GAS VELOCITY - M/SEC	3.0	(9.8 FT/S)
INLET GAS FLOW - CU. M/S	203.73	(431725 ACFM)
INLET GAS TEMPERATURE - C	50.0	(122 F)
SO2 REMOVAL EFFICIENCY - %	89.0	
PARTICLE REMOVAL EFFICENCY - %	90.0	

** MIST ELIMINATOR

PRE-MIST ELIMINATOR/MIST ELIMINATOR	PRIMARY COLLECTOR	
GENERIC TYPE	IMPINGEMENT	
SPECIFIC TYPE	BAFFLE	
TRADE NAME/COMMON TYPE	CLOSED VANE	
NUMBER OF STAGES	2	
PRESSURE DROP - KPA	.1	(.6 IN-H2O)
CONSTRUCTION MATERIAL GENERIC TYPE	NR	
CONSTRUCTION MATERIAL SPECIFIC TYPE	NR	
WASH WATER SOURCE	FRESH	
WASH RATE - L/S	200.0	(3170 GAL/MIN)

** REHEATER

GENERIC TYPE	WASTE HEAT RECOVERY	
SPECIFIC TYPE	NR	
TRADE NAME/COMMON TYPE	NR	
TEMPERATURE INCREASE - C	157.8	(284 F)
INLET FLUE GAS FLOW RATE - CU. M/S	203.73	(431725 ACFM)
INLET FLUE GAS TEMPERATURE - C	105.0	(221 F)
CONSTRUCTION MATERIAL GENERIC TYPE	NR	
CONSTRUCTION MATERIAL SPECIFIC TYPE	NR	

CHUGOKU ELECTRIC: SHIMONOSEKI 1 (CONT.)

** FANS

SUPPLIER	MITSUBISHI HEAVY INDUSTRIES	
FLUE GAS FLOW RATE - CU.M/S	294.04	(623108 ACFM)
FLUE GAS TEMPERATURE - C	140.0	(284 F)

** DAMPERS

FUNCTION	NR
GENERIC TYPE	NR
SPECIFIC TYPE	NR
CONSTRUCTION MATERIAL GENERIC TYPE	NR
CONSTRUCTION MATERIAL SPECIFIC TYPE	NR
LINER GENERIC MATERIAL TYPE	NR
LINER SPECIFIC MATERIAL TYPE	NR

** REAGENT PREPARATION EQUIPMENT

FUNCTION	WET BALL MILL
DEVICE	NR
DEVICE TYPE	NR

** SOLIDS CONCENTRATING/DEWATERING

DEVICE	CENTRIFUGE
NUMBER	5
NUMBER OF SPARES	0
FEED STREAM CHARACTERISTICS	25% SOLIDS
OUTLET STREAM CHARACTERISTICS	90% SOLIDS

** SOLIDS CONCENTRATING/DEWATERING

DEVICE	THICKENER
NUMBER	1
NUMBER OF SPARES	0
DIMENSIONS - FT	33.0 DIA X 10.0
FEED STREAM CHARACTERISTICS	5% SOLIDS
OUTLET STREAM CHARACTERISTICS	25% SOLIDS

*** SALEABLE BYPRODUCTS

NATURE	GYPSUM	
FULL LOAD QUANTITY - M T/H	6.98	(7.70 TPH)
QUALITY - %	99.0	

*** SLUDGE

** TREATMENT

METHOD	NR
DEVICE	NR
PROPRIETARY PROCESS	NR

** DISPOSAL

NATURE	NR
TYPE	NR
SITE TREATMENT	NR

** WATER BALANCE

WATER LOOP TYPE	OPEN	
EVAPORATION WATER LOSS - LITER/S	3.0	(47 GPM)
POND SEEPAGE/RUNOFF WATER LOSS - LITERS/S	54	
MAKEUP WATER ADDITION - LITERS/S	6.8	(108 GPM)

CHUGOKU ELECTRIC: SHIMONOSEKI 1 (CONT.)

PERIOD	MODULE	AVAILABILITY	OPERABILITY	RELIABILITY	UTILIZATION	% REMOVAL SO2	% REMOVAL PART.	PER HOURS	BOILER HOURS	FGD HOURS	CAP. FACTOR
7/79	SYSTEM	100.0	100.0	100.0	50.0			744	372	372	
8/79	SYSTEM	100.0	100.0	100.0	100.0			744	744	744	
9/79	SYSTEM	100.0	100.0	100.0	100.0			720	720	720	

** PROBLEMS/SOLUTIONS/COMMENTS

COMMERCIAL OPERATIONS BEGAN IN THE MIDDLE OF JULY 1979. THE FGD UNIT HAS OPERATED CONTINUOUSLY THROUGH THE THIRD QUARTER WITH NO PROBLEMS.

10/79	SYSTEM	100.0	100.0	100.0	100.0			744	744	744	
11/79	SYSTEM	100.0	100.0	100.0	100.0			720	720	720	
12/79	SYSTEM	100.0	93.5	100.0	93.5			744	744	696	

** PROBLEMS/SOLUTIONS/COMMENTS

THE FGD UNIT OPERATED CONTINUOUSLY THROUGH THE FOURTH QUARTER EXCEPT FOR A 2 DAY SHUTDOWN TO INSPECT THE GAS-GAS HEATER DURING DECEMBER. THE BOILER WAS OPERATED FIRING A LOW SULFUR OIL DURING THE TWO DAYS.

1/80	SYSTEM	100.0	100.0	100.0	100.0			744	744	744	
2/80	SYSTEM	100.0	100.0	100.0	53.4			696	372	372	

** PROBLEMS/SOLUTIONS/COMMENTS

DURING JANUARY AND THE FIRST HALF OF FEBRUARY THE FGD UNIT OPERATED WITH NO PROBLEMS. THE BOILER WAS TAKEN OFF-LINE ON FEBRUARY 8 FOR SCHEDULED MAINTENANCE.

3/80	SYSTEM	100.0			.0			744	0	0	

** PROBLEMS/SOLUTIONS/COMMENTS

THE BOILER REMAINED DOWN THROUGH MARCH FOR ANNUAL MAINTENANCE.

4/80	SYSTEM	100.0	100.0	100.0	182.4			720	593	593	

** PROBLEMS/SOLUTIONS/COMMENTS

DURING THE ANNUAL MAINTENANCE THE SCR (SELECTIVE CATALYTIC REDUCTION OF NOX) UNIT WAS CONNECTED BETWEEN THE BOILER AND AIR PREHEATER. AFTER THE STARTUP ON APRIL 6, COAL ONLY HAS BEEN USED (BEFORE FEBRUARY, COAL AND OIL WERE USED 50:50). EXCEPT FOR A 2 HOUR SHUTDOWN FOR A TURBINE TEST ON APRIL 7, THE FGD SYSTEM HAS OPERATED CONTINUOUSLY WITH NO PROBLEMS.

5/80	SYSTEM	100.0	100.0	100.0	90.3			744	672	672	

** PROBLEMS/SOLUTIONS/COMMENTS

THE FGD SYSTEM OPERATED CONTINOUSLY WITH NO PROBLEMS. A THREE DAY SHUTDOWN FOR INSPECTION OF THE SCR UNIT FROM MAY 16 TO MAY 19 WAS THE ONLY DOWN TIME EXPERIENCED DURING MAY.

6/80	SYSTEM	100.0	100.0	100.0	100.0			720	720	720	99.4

EPA UTILITY FGD SURVEY: OCTOBER - DECEMBER 1981

CHUGOKU ELECTRIC: SHIMONOSEKI 1 (CONT.)

PERIOD	MODULE	AVAILABILITY	OPERABILITY	RELIABILITY	UTILIZATION	% REMOVAL SO2	% REMOVAL PART.	PER HOURS	BOILER HOURS	FGD HOURS	CAP. FACTOR
		PERFORMANCE DATA									
7/80	SYSTEM	100.0	100.0	100.0	100.0			744	744	744	98.9
8/80	SYSTEM	88.7	88.7	88.7	88.7			744	744	660	99.5
9/80	SYSTEM	89.0	89.0	89.0	89.0			720	720	641	97.3
10/80	SYSTEM	100.0	97.4	100.0	88.0			744	673	655	88.5
11/80	SYSTEM	100.0	100.0	100.0	100.0			720	720	720	99.4
12/80	SYSTEM	100.0	100.0	100.0	100.0			744	744	744	99.6
1/81	SYSTEM							744			
2/81	SYSTEM							672			
3/81	SYSTEM							744			

** PROBLEMS/SOLUTIONS/COMMENTS

THE FGD SYSTEM OPERATED CONTINOUSLY WITH NO PROBLEMS DURING JUNE.

** PROBLEMS/SOLUTIONS/COMMENTS

THE FGD SYSTEM OPERATED DURING JULY WITH NO PROBLEMS.

** PROBLEMS/SOLUTIONS/COMMENTS

DURING AUGUST THE FGD SYSTEM WAS SHUT DOWN FOR 84 HOURS DUE TO SOME PLUGGING IN THE REHEATER. DURING THIS TIME THE REHEATER WAS WATER WASHED AND THE SOOT BLOWER SYSTEM WAS IMPROVED.

** PROBLEMS/SOLUTIONS/COMMENTS

DURING SEPTEMBER PROBLEMS WITH PLUGGING IN THE REHEATER RECURRED. THE TROUBLE WAS CAUSED BY ESP PROBLEMS, BY WHICH A LARGE AMOUNT OF FLYASH WENT INTO THE REHEATER.

** PROBLEMS/SOLUTIONS/COMMENTS

DURING OCTOBER THE BOILER WAS TAKEN OFF LINE FOR THREE DAYS FOR AN INSPECTION OF THE NOX REMOVAL SYSTEM.

** PROBLEMS/SOLUTIONS/COMMENTS

NO PROBLEMS WERE ENCOUNTERED DURING THE MONTHS OF NOVEMBER AND DECEMBER.

** PROBLEMS/SOLUTIONS/COMMENTS

THE FIRST QUARTER 1981 DATA IS NOT AVAILABLE AT THIS TIME; HOWEVER THE DATA WILL BE AVAILABLE IN THE SECOND QUARTER 1981 REPORT.

SECTION 15
DESIGN AND PERFORMANCE DATA FOR OPERATIONAL FOREIGN FGD SYSTEMS

COMPANY NAME	ELECTRIC POWER DEVELOPMENT	
PLANT NAME	ISOGO	
UNIT NUMBER	1	
CITY	YOKOHAMA	
COUNTRY	JAPAN	
REGULATORY CLASSIFICATION	******	
PARTICULATE EMISSION LIMITATION - NG/J	20.	(.046 LB/MMBTU)
SO2 EMISSION LIMITATION - NG/J	58.	(.135 LB/MMBTU)
NOX EMISSION LIMITATION - NG/J	******	(****** LB/MMBTU)
NET PLANT GENERATING CAPACITY - MW	238	
GROSS UNIT GENERATING CAPACITY - MW	265	
NET UNIT GENERATING CAPACITY W/FGD - MW	238	
NET UNIT GENERATING CAPACITY WO/FGD - MW	*****	
EQUIVALENT SCRUBBED CAPACITY - MW	265	
** UNIT DATA - BOILER AND STACK		
BOILER SUPPLIER	IHI	
BOILER TYPE	PULVERIZED COAL	
BOILER SERVICE LOAD	BASE	
DESIGN BOILER FLUE GAS FLOW - CU.M/S	405.36	(859000 ACFM)
BOILER FLUE GAS TEMPERATURE - C	170.0	(338 F)
STACK HEIGHT - M	122.	(400 FT)
STACK SHELL	CARBON STEEL	
STACK TOP DIAMETER - M	3.7	(12.0 FT)
** FUEL DATA		
FUEL TYPE	COAL	
FUEL GRADE	******	
AVERAGE HEAT CONTENT - J/G	25958.	(11160 BTU/LB)
RANGE HEAT CONTENT - BTU/LB		11160-11520
AVERAGE ASH CONTENT - %	16.00	
RANGE ASH CONTENT - %	15.0-17.0	
AVERAGE MOISTURE CONTENT - %	7.00	
RANGE MOISTURE CONTENT - %	6.0-8.0	
AVERAGE SULFUR CONTENT - %	.60	
RANGE SULFUR CONTENT - %	0.2-0.6	
AVERAGE CHLORIDE CONTENT - %	********	
RANGE CHLORIDE CONTENT - %	******	
*** PARTICLE CONTROL		
** MECHANICAL COLLECTOR		
NUMBER	0	
TYPE	NONE	
** ESP		
NUMBER	2	
TYPE	COLD SIDE	
SUPPLIER	TOYO ENGINEERING	
INLET FLUE GAS CAPACITY - CU.M/S	353.2	(748362 ACFM)
INLET FLUE GAS TEMPERATURE - C	150.0	(302 F)
PARTICLE REMOVAL EFFICENCY - %	98.0	
** PARTICLE SCRUBBER		
NUMBER	1	
NUMBER OF SPARES	0	
GENERIC TYPE	VENTURI TOWER	
SPECIFIC TYPE	NR	
TRADE NAME/COMMON NAME	NR	
SUPPLIER	IHI-CHEMICO	
DIMENSIONS - FT	43.6 DIA X 101.4	
SHELL GENERIC MATERIAL	CARBON STEEL	
SHELL SPECIFIC MATERIAL	AISI 1110	
LINER GENERIC MATERIAL	ORGANIC	
LINER SPECIFIC MATERIAL	GLASS FLAKE-FILLED POLYESTER	
GAS CONTACTING DEVICE TYPE	NONE	
NUMBER OF CONTACTING ZONES	1	
LIQUID RECIRCULATION RATE - LITER/S	2194.1	(34827 GPM)
L/G RATIO - LITER/CU.M	9.4	(70.0 GAL/1000ACF)

ELECTRIC POWER DEVELOPMENT: ISOGO 1 (CONT.)

PRESSURE DROP - KPA	1.5	(5.9 IN-H2O)
SUPERFICIAL GAS VELOCITY - M/S	3.0	(10.0 FT/S)
INLET GAS FLOW RATE - CU.M/S	424.6	(899864 ACFM)
INLET GAS TEMPERATURE - C	170.0	(338 F)

*** FGD SYSTEM

** GENERAL DATA

SALEABLE PRODUCT/THROWAWAY PRODUCT	SALEABLE PRODUCT
SO2 REMOVAL MODE	WET SCRUBBING
PROCESS TYPE	LIMESTONE
SYSTEM SUPPLIER	IHI-CHEMICO
DEVELOPMENT LEVEL	FULL SCALE
NEW/RETROFIT	RETROFIT
UNIT DESIGN PARTICLE REMOVAL EFFICIENCY - %	97.00
UNIT DESIGN SO2 REMOVAL EFFICIENCY - %	95.00
CURRENT STATUS	1
COMMERCIAL START-UP	3/76
INITIAL START-UP	12/75

** DESIGN AND OPERATING PARAMETERS

** QUENCHER/PRESATURATOR

CONSTRUCTION MATERIAL GENERIC TYPE	NR
CONSTRUCTION MATERIAL SPECIFIC TYPE	NR

** ABSORBER

NUMBER	1	
NUMBER OF SPARES	0	
GENERIC TYPE	VENTURI TOWER	
SPECIFIC TYPE	NR	
TRADE NAME/COMMON TYPE	NR	
SUPPLIER	IHI/CHEMICO	
DIMENSIONS - FT	43.5 DIA X 76.8	
SHELL GENERIC MATERIAL	CARBON STEEL	
SHELL SPECIFIC MATERIAL	NR	
SHELL MATERIAL TRADE NAME/COMMON TYPE	N/A	
LINER GENERIC MATERIAL	ORGANIC	
LINER SPECIFIC MATERIAL	GLASS FLAKE-FILLED POLYESTER	
LINER MATERIAL TRADE NAME/COMMON TYPE	NR	
GAS CONTACTING DEVICE TYPE	NONE	
NUMBER OF CONTACTING ZONES	1	
LIQUID RECIRCULATION RATE - LITER/S	2194.	(34827 GPM)
L/G RATIO - L/CU.M	9.4	(70.0 GAL/1000 ACF)
GAS-SIDE PRESSURE DROP - KPA	1.5	(5.9 IN-H2O)
SUPERFICAL GAS VELOCITY - M/SEC	3.0	(10.0 FT/S)
INLET GAS FLOW - CU. M/S	566.28	(1200000 ACFM)
INLET GAS TEMPERATURE - C	55.0	(131 F)
PARTICLE REMOVAL EFFICENCY - %	96.7	

** MIST ELIMINATOR

PRE-MIST ELIMINATOR/MIST ELIMINATOR	PRIMARY COLLECTOR
GENERIC TYPE	IMPINGEMENT
SPECIFIC TYPE	BAFFLE
TRADE NAME/COMMON TYPE	CLOSED VANE
CONFIGURATION	HORIZONTAL
NUMBER OF STAGES	4
NUMBER OF PASSES PER STAGE	4
PRESSURE DROP - KPA	.5 (2.0 IN-H2O)
SUPERFICAL GAS VELOCITY - M/S	3.0 (9.8 FT/S)
CONSTRUCTION MATERIAL GENERIC TYPE	ORGANIC
CONSTRUCTION MATERIAL SPECIFIC TYPE	NR
WASH FREQUENCY	INTERMITTENT

** REHEATER

GENERIC TYPE	DIRECT COMBUSTION	
SPECIFIC TYPE	NR	
TRADE NAME/COMMON TYPE	OIL	
TEMPERATURE INCREASE - C	83.9	(151 F)
INLET FLUE GAS TEMPERATURE - C	120.0	(248 F)
CONSTRUCTION MATERIAL GENERIC TYPE	NR	

ELECTRIC POWER DEVELOPMENT: ISOGO 1 (CONT.)

CONSTRUCTION MATERIAL SPECIFIC TYPE	NR
** FANS	
NUMBER	2
NUMBER OF SPARES	0
FUNCTION	BOOSTER
FLUE GAS FLOW RATE - CU.M/S	362.14 (767400 ACFM)
FLUE GAS TEMPERATURE - C	170.0 (338 F)
** FANS	
NUMBER	1
NUMBER OF SPARES	0
APPLICATION	OXIDATION BLOWER
FLUE GAS FLOW RATE - CU.M/S	.86 (1830 ACFM)
FLUE GAS TEMPERATURE - C	10.0 (50 F)
** DAMPERS	
FUNCTION	NR
GENERIC TYPE	NR
SPECIFIC TYPE	NR
CONSTRUCTION MATERIAL GENERIC TYPE	NR
CONSTRUCTION MATERIAL SPECIFIC TYPE	NR
LINER GENERIC MATERIAL TYPE	NR
LINER SPECIFIC MATERIAL TYPE	NR
** REAGENT PREPARATION EQUIPMENT	
FUNCTION	WET BALL MILL
DEVICE	NR
DEVICE TYPE	NR
** TANKS	
SERVICE	NUMBER
---	---
OXIDATION TOWER FEED	2
RECYCLE	****
SLURRY	1
THICKENER OVERFLOW	1
FILTRATE	1
** PUMPS	
SERVICE	NUMBER
---	---
SLURRY MAKEUP	3
ABSORBER RECIRCULATION	8
OXIDATION TOWER SUPPLY TRANSFER	2
FILTRATE	2
** SOLIDS CONCENTRATING/DEWATERING	
DEVICE	CENTRIFUGE
NUMBER	4
NUMBER OF SPARES	1
FEED STREAM CHARACTERISTICS	18.5% SOLIDS
OUTLET STREAM CHARACTERISTICS	90% SOLIDS
** SOLIDS CONCENTRATING/DEWATERING	
DEVICE	THICKENER
NUMBER	1
NUMBER OF SPARES	0
DIMENSIONS - FT	20.0 DIA X 10.0
FEED STREAM CHARACTERISTICS	8.5% SOLIDS
OUTLET STREAM CHARACTERISTICS	18.6% SOLIDS
*** SALEABLE BYPRODUCTS	
NATURE	GYPSUM
FULL LOAD QUANTITY - M T/H	4.53 (5.00 TPH)
DISPOSITION	MARKETED

*** SLUDGE

** TREATMENT

METHOD	FORCED OXIDATION
DEVICE	OXIDATION TANK
PROPRIETARY PROCESS	N/A

** DISPOSAL

NATURE	NR
TYPE	NR
SITE TREATMENT	NR

** PROCESS CONTROL AND INSTRUMENTATION

CHEMICAL PARAMETERS	PH
PROCESS CONTROL MANNER	AUTOMATIC
PROCESS CHEMISTRY MODE	FEEDBACK

** WATER BALANCE

WATER LOOP TYPE	OPEN	
POND SEEPAGE/RUNOFF WATER LOSS - LITERS/S	40	
MAKEUP WATER ADDITION - LITERS/S	22.3	(354 GPM)

PERFORMANCE DATA

PERIOD	MODULE	AVAILABILITY	OPERABILITY	RELIABILITY	UTILIZATION	% REMOVAL SO2	% REMOVAL PART.	PER HOURS	BOILER HOURS	FGD HOURS	CAP. FACTOR
4/78	SYSTEM							720			
5/78	SYSTEM							744			
6/78	SYSTEM							720			
7/78	SYSTEM							744			
8/78	SYSTEM							744			
9/78	SYSTEM							720			
10/78	SYSTEM							744			
11/78	SYSTEM							720			
12/78	SYSTEM							744			
1/79	SYSTEM							744			
2/79	SYSTEM							672			
3/79	SYSTEM							744			

** PROBLEMS/SOLUTIONS/COMMENTS

100% AVAILABILITY FOR THE FGD SYSTEM WAS REPORTED DURING THE PERIOD APRIL 1978 THROUGH MARCH 1979. THE SYSTEM SO2 REMOVAL EFFICIENCY WAS REPORTEDLY AVERAGING 95%.

4/79	SYSTEM							720			
5/79	SYSTEM							744			
6/79	SYSTEM							720			
7/79	SYSTEM							744			
8/79	SYSTEM							744			

ELECTRIC POWER DEVELOPMENT: ISOGO 1 (CONT.)

PERIOD	MODULE	AVAILABILITY	OPERABILITY	RELIABILITY	UTILIZATION	% REMOVAL SO2	% REMOVAL PART.	PER HOURS	BOILER HOURS	FGD HOURS	CAP. FACTOR
		PERFORMANCE DATA									
9/79	SYSTEM							720			
10/79	SYSTEM							744			
11/79	SYSTEM							720			
12/79	SYSTEM							744			
1/80	SYSTEM							744			
2/80	SYSTEM							696			
3/80	SYSTEM							744			
	** PROBLEMS/SOLUTIONS/COMMENTS										
	NO INFORMATION WAS AVAILABLE FOR THE APRIL 1979 THROUGH MARCH 1980 PERIOD.										
4/80	SYSTEM	100.0	100.0	100.0	100.0			720	720	720	
	** PROBLEMS/SOLUTIONS/COMMENTS										
	THE FGD SYSTEM OPERATED ALONG WITH THE BOILER FOR THE ENTIRE MONTH OF APRIL.										
5/80	SYSTEM	100.0	100.0	100.0	52.8			744	393	393	
6/80	SYSTEM	100.0	100.0	100.0	10.0			720	72	72	
	** PROBLEMS/SOLUTIONS/COMMENTS										
	THE BOILER WAS SHUT DOWN FROM MAY 17 TO JUNE 27 FOR ANNUAL MAINTENANCE. THE FGD SYSTEM WAS OPERATED DURING ALL OF THE BOILER OPERATION IN MAY AND JUNE.										
7/80	SYSTEM	100.0	100.0	100.0	100.0	95.30		744	744	744	90.9
8/80	SYSTEM	100.0	100.0	100.0	100.0	95.70		744	744	744	91.9
9/80	SYSTEM	100.0	100.0	100.0	99.8	96.20		720	718	718	90.4
	** PROBLEMS/SOLUTIONS/COMMENTS										
	DURING SEPTEMBER THE BOILER WAS OUT OF SERVICE FOR APPPOXIMATELY TWO HOURS TO CHANGE THE TAP ON THE MAIN TRANSFORMER.										
10/80	SYSTEM	100.0	100.0	100.0	91.4	96.00		744	680	680	84.5
11/80	SYSTEM	100.0	100.0	100.0	100.0	95.50		720	720	720	91.7
12/80	SYSTEM	100.0	100.0	100.0	100.0	95.00		744	744	744	93.2
	** PROBLEMS/SOLUTIONS/COMMENTS										
	DURING JULY THROUGH DECEMBER THE FGD SYSTEM EXPERIENCED NO OPERATIONAL PROBLEMS.										
1/81	SYSTEM							744			
2/81	SYSTEM							672			
3/81	SYSTEM							744			

EPA UTILITY FGD SURVEY: OCTOBER - DECEMBER 1981

ELECTRIC POWER DEVELOPMENT: ISOGO 1 (CONT.)

PERFORMANCE DATA											
PERIOD	MODULE	AVAILABILITY	OPERABILITY	RELIABILITY	UTILIZATION	% REMOVAL SO2	% REMOVAL PART.	PER HOURS	BOILER HOURS	FGD HOURS	CAP. FACTOR

** PROBLEMS/SOLUTIONS/COMMENTS

THE FIRST QUARTER 1981 DATA IS NOT AVAILABLE AT THIS TIME; HOWEVER THE DATA WILL BE AVAILABLE IN THE SECOND QUARTER 1981 REPORT.

SECTION 15
DESIGN AND PERFORMANCE DATA FOR OPERATIONAL FOREIGN FGD SYSTEMS

COMPANY NAME	ELECTRIC POWER DEVELOPMENT	
PLANT NAME	ISOGO	
UNIT NUMBER	2	
CITY	YOKOHAMA	
COUNTRY	JAPAN	
REGULATORY CLASSIFICATION	******	
PARTICULATE EMISSION LIMITATION - NG/J	20.	(.046 LB/MMBTU)
SO2 EMISSION LIMITATION - NG/J	58.	(.135 LB/MMBTU)
NOX EMISSION LIMITATION - NG/J	******	(****** LB/MMBTU)
NET PLANT GENERATING CAPACITY - MW	238	
GROSS UNIT GENERATING CAPACITY - MW	265	
NET UNIT GENERATING CAPACITY W/FGD - MW	238	
NET UNIT GENERATING CAPACITY WO/FGD - MW	246	
EQUIVALENT SCRUBBED CAPACITY - MW	265	
** UNIT DATA - BOILER AND STACK		
BOILER SUPPLIER	IHI	
BOILER TYPE	PULVERIZED COAL	
BOILER SERVICE LOAD	BASE	
DESIGN BOILER FLUE GAS FLOW - CU.M/S	405.36	(859000 ACFM)
BOILER FLUE GAS TEMPERATURE - C	170.0	(338 F)
STACK HEIGHT - M	140.	(460 FT)
STACK SHELL	CARBON STEEL	
STACK TOP DIAMETER - M	3.7	(12.0 FT)
** FUEL DATA		
FUEL TYPE	COAL	
FUEL GRADE	******	
AVERAGE HEAT CONTENT - J/G	25958.	(11160 BTU/LB)
RANGE HEAT CONTENT - BTU/LB		11160-11520
AVERAGE ASH CONTENT - %	16.00	
RANGE ASH CONTENT - %	15.0-17.0	
AVERAGE MOISTURE CONTENT - %	7.00	
RANGE MOISTURE CONTENT - %	6.0-8.0	
AVERAGE SULFUR CONTENT - %	.60	
RANGE SULFUR CONTENT - %	0.2-0.6	
AVERAGE CHLORIDE CONTENT - %	********	
RANGE CHLORIDE CONTENT - %	******	
*** PARTICLE CONTROL		
** MECHANICAL COLLECTOR		
NUMBER	0	
TYPE	NONE	
** ESP		
NUMBER	2	
INLET FLUE GAS CAPACITY - CU.M/S	356.6	(755654 ACFM)
INLET FLUE GAS TEMPERATURE - C	150.0	(302 F)
PARTICLE REMOVAL EFFICENCY - %	98.0	
** PARTICLE SCRUBBER		
NUMBER	1	
NUMBER OF SPARES	0	
GENERIC TYPE	VENTURI TOWER	
SPECIFIC TYPE	NR	
TRADE NAME/COMMON NAME	NR	
SUPPLIER	IHI-CHEMICO	
DIMENSIONS - FT	43.6 DIA X 101.4	
SHELL GENERIC MATERIAL	CARBON STEEL	
SHELL SPECIFIC MATERIAL	AISI 1110	
LINER GENERIC MATERIAL	ORGANIC	
LINER SPECIFIC MATERIAL	GLASS FLAKE-FILLED POLYESTER	
GAS CONTACTING DEVICE TYPE	NONE	
NUMBER OF CONTACTING ZONES	1	
LIQUID RECIRCULATION RATE - LITER/S	2194.1	(34827 GPM)
L/G RATIO - LITER/CU.M	9.4	(70.0 GAL/1000ACF)
PRESSURE DROP - KPA	1.5	(5.9 IN-H2O)
SUPERFICIAL GAS VELOCITY - M/S	3.0	(10.0 FT/S)

ELECTRIC POWER DEVELOPMENT: ISOGO 2 (CONT.)

INLET GAS FLOW RATE - CU.M/S	424.6	(899864 ACFM)
INLET GAS TEMPERATURE - C	170.0	(338 F)

*** FGD SYSTEM

** GENERAL DATA

SALEABLE PRODUCT/THROWAWAY PRODUCT	SALEABLE PRODUCT
SO2 REMOVAL MODE	WET SCRUBBING
PROCESS TYPE	LIMESTONE
SYSTEM SUPPLIER	IHI-CHEMICO
DEVELOPMENT LEVEL	FULL SCALE
NEW/RETROFIT	RETROFIT
UNIT DESIGN PARTICLE REMOVAL EFFICIENCY - %	97.00
UNIT DESIGN SO2 REMOVAL EFFICIENCY - %	95.00
ENERGY CONSUMPTION - %	3.0
CURRENT STATUS	1
COMMERCIAL START-UP	5/76
INITIAL START-UP	3/76

** DESIGN AND OPERATING PARAMETERS

** QUENCHER/PRESATURATOR

CONSTRUCTION MATERIAL GENERIC TYPE	NR
CONSTRUCTION MATERIAL SPECIFIC TYPE	NR

** ABSORBER

NUMBER	1	
NUMBER OF SPARES	0	
GENERIC TYPE	VENTURI TOWER	
SPECIFIC TYPE	NR	
TRADE NAME/COMMON TYPE	NR	
SUPPLIER	IHI/CHEMICO	
DIMENSIONS - FT	43.5 DIA X 76.8	
SHELL GENERIC MATERIAL	CARBON STEEL	
SHELL SPECIFIC MATERIAL	NR	
SHELL MATERIAL TRADE NAME/COMMON TYPE	N/A	
LINER GENERIC MATERIAL	ORGANIC	
LINER SPECIFIC MATERIAL	GLASS FLAKE-FILLED POLYESTER	
LINER MATERIAL TRADE NAME/COMMON TYPE	NR	
GAS CONTACTING DEVICE TYPE	NONE	
NUMBER OF CONTACTING ZONES	1	
LIQUID RECIRCULATION RATE - LITER/S	2194.	(34827 GPM)
L/G RATIO - L/CU.M	9.4	(70.0 GAL/1000 ACF)
GAS-SIDE PRESSURE DROP - KPA	1.5	(5.9 IN-H2O)
SUPERFICAL GAS VELOCITY - M/SEC	3.0	(10.0 FT/S)
INLET GAS FLOW - CU. M/S	566.28	(1200000 ACFM)
INLET GAS TEMPERATURE - C	55.0	(131 F)
PARTICLE REMOVAL EFFICENCY - %	96.7	

** MIST ELIMINATOR

PRE-MIST ELIMINATOR/MIST ELIMINATOR	PRIMARY COLLECTOR	
GENERIC TYPE	IMPINGEMENT	
SPECIFIC TYPE	BAFFLE	
TRADE NAME/COMMON TYPE	CLOSED VANE	
CONFIGURATION	HORIZONTAL	
NUMBER OF STAGES	4	
NUMBER OF PASSES PER STAGE	4	
PRESSURE DROP - KPA	.5	(2.0 IN-H2O)
SUPERFICAL GAS VELOCITY - M/S	3.0	(9.8 FT/S)
CONSTRUCTION MATERIAL GENERIC TYPE	ORGANIC	
CONSTRUCTION MATERIAL SPECIFIC TYPE	NR	
WASH FREQUENCY	INTERMITTENT	

** REHEATER

GENERIC TYPE	DIRECT COMBUSTION	
SPECIFIC TYPE	NR	
TRADE NAME/COMMON TYPE	OIL	
TEMPERATURE INCREASE - C	83.9	(151 F)
INLET FLUE GAS FLOW RATE - CU. M/S	132.50	(280783 ACFM)
INLET FLUE GAS TEMPERATURE - C	120.0	(248 F)
CONSTRUCTION MATERIAL GENERIC TYPE	NR	

ELECTRIC POWER DEVELOPMENT: ISOGO 2 (CONT.)

CONSTRUCTION MATERIAL SPECIFIC TYPE	NR
** FANS	
NUMBER	2
NUMBER OF SPARES	0
FUNCTION	BOOSTER
FLUE GAS FLOW RATE - CU.M/S	362.14 (767400 ACFM)
FLUE GAS TEMPERATURE - C	170.0 (338 F)
** FANS	
NUMBER	1
NUMBER OF SPARES	0
APPLICATION	OXIDATION BLOWER
FLUE GAS FLOW RATE - CU.M/S	.86 (1830 ACFM)
FLUE GAS TEMPERATURE - C	10.0 (50 F)
** DAMPERS	
FUNCTION	NR
GENERIC TYPE	NR
SPECIFIC TYPE	NR
CONSTRUCTION MATERIAL GENERIC TYPE	NR
CONSTRUCTION MATERIAL SPECIFIC TYPE	NR
LINER GENERIC MATERIAL TYPE	NR
LINER SPECIFIC MATERIAL TYPE	NR
** REAGENT PREPARATION EQUIPMENT	
FUNCTION	WET BALL MILL
DEVICE	NR
DEVICE TYPE	NR
** TANKS	

SERVICE	NUMBER
OXIDATION TOWER FEED	2
SLURRY	1
THICKENER OVERFLOW	1
FILTRATE	1

** PUMPS

SERVICE	NUMBER
SLURRY MAKEUP	2
ABSORBER RECIRCULATION	8
OXIDATION TOWER SUPPLY TRANSFER	2
FILTRATE	2

** SOLIDS CONCENTRATING/DEWATERING	
DEVICE	CENTRIFUGE
NUMBER	4
NUMBER OF SPARES	0
FEED STREAM CHARACTERISTICS	18.5% SOLIDS
OUTLET STREAM CHARACTERISTICS	90% SOLIDS
** SOLIDS CONCENTRATING/DEWATERING	
DEVICE	THICKENER
NUMBER	1
NUMBER OF SPARES	0
DIMENSIONS - FT	20.0 DIA X 10.0
FEED STREAM CHARACTERISTICS	8.5% SOLIDS
OUTLET STREAM CHARACTERISTICS	18.6% SOLIDS
*** SALEABLE BYPRODUCTS	
NATURE	GYPSUM
FULL LOAD QUANTITY - M T/H	4.53 (5.00 TPH)
DISPOSITION	MARKETED

*** SLUDGE

ELECTRIC POWER DEVELOPMENT: ISOGO 2 (CONT.)

** TREATMENT

METHOD	FORCED OXIDATION
DEVICE	OXIDATION TANK
PROPRIETARY PROCESS	N/A

** DISPOSAL

NATURE	NR
TYPE	NR
SITE TREATMENT	NR

** PROCESS CONTROL AND INSTRUMENTATION

CHEMICAL PARAMETERS	PH
PROCESS CONTROL MANNER	AUTOMATIC
PROCESS CHEMISTRY MODE	FEEDBACK

** WATER BALANCE

WATER LOOP TYPE	OPEN	
POND SEEPAGE/RUNOFF WATER LOSS - LITERS/S	40	
MAKEUP WATER ADDITION - LITERS/S	22.3	(354 GPM)

PERFORMANCE DATA

PERIOD	MODULE	AVAILABILITY	OPERABILITY	RELIABILITY	UTILIZATION	% REMOVAL SO2	% REMOVAL PART.	PER HOURS	BOILER HOURS	FGD HOURS	CAP. FACTOR
4/78	SYSTEM							720			
5/78	SYSTEM							744			
6/78	SYSTEM							720			
7/78	SYSTEM							744			
8/78	SYSTEM							744			
9/78	SYSTEM							720			
10/78	SYSTEM							744			
11/78	SYSTEM							720			
12/78	SYSTEM							744			
1/79	SYSTEM							744			
2/79	SYSTEM							672			
3/79	SYSTEM							744			

** PROBLEMS/SOLUTIONS/COMMENTS

100% AVAILABILITY FOR THE FGD SYSTEM WAS REPORTED DURING THE PERIOD APRIL 1978 THROUGH MARCH 1979. THE FGD SYSTEM LOGGED A TOTAL OF 1,689 HOURS OF OPERATION.

4/79	SYSTEM							720			
5/79	SYSTEM							744			
6/79	SYSTEM							720			
7/79	SYSTEM							744			
8/79	SYSTEM							744			
9/79	SYSTEM							720			
10/79	SYSTEM							744			

ELECTRIC POWER DEVELOPMENT: ISOGO 2 (CONT.)

PERIOD	MODULE	AVAILABILITY	OPERABILITY	RELIABILITY	UTILIZATION	% REMOVAL SO2	% REMOVAL PART.	PER HOURS	BOILER HOURS	FGD HOURS	CAP. FACTOR
		PERFORMANCE DATA									
11/79	SYSTEM							720			
12/79	SYSTEM							744			
1/80	SYSTEM							744			
2/80	SYSTEM							696			
3/80	SYSTEM							744			
	** PROBLEMS/SOLUTIONS/COMMENTS										
		NO INFORMATION WAS AVAILABLE FOR THE APRIL 1979 THROUGH MARCH 1980 PERIOD.									
4/80	SYSTEM	100.0	100.0	100.0	31.3			720	225	225	
	** PROBLEMS/SOLUTIONS/COMMENTS										
		ON MARCH 30 THE BOILER WAS SHUTDOWN FOR ANNUAL MAINTENANCE. THE UNIT REMAINED DOWN THROUGH APRIL 20. WHEN OPERATIONS COMMENCED THE FGD SYSTEM OPERATED WITH THE BOILER FOR THE REST OF THE MONTH.									
5/80	SYSTEM	100.0	100.0	100.0	100.0			744	744	744	
6/80	SYSTEM	100.0	100.0	100.0	100.0			720	720	720	
	** PROBLEMS/SOLUTIONS/COMMENTS										
		DURING MAY AND JUNE THE FGD SYSTEM OPERATED WITH NO REPORTED PROBLEMS.									
7/80	SYSTEM	100.0	100.0	100.0	88.2	94.90		744	656	656	82.0
	** PROBLEMS/SOLUTIONS/COMMENTS										
		DURING JULY THE BOILER WAS OFF LINE APPROXIMATELY 88 HOURS FOR MAINTENANCE.									
8/80	SYSTEM	100.0	100.0	100.0	100.0	96.00		744	744	744	91.9
9/80	SYSTEM	100.0	100.0	100.0	99.8	95.70		720	718	718	92.1
	** PROBLEMS/SOLUTIONS/COMMENTS										
		APPROXIMATELY TWO HOURS OF BOILER OUTAGE TIME WAS NECESSARY TO CHANGE THE TAP OF THE MAIN TRANSFORMER.									
10/80	SYSTEM	100.0	100.0	100.0	100.0	95.30		744	744	744	92.2
11/80	SYSTEM	100.0	100.0	100.0	100.0	95.20		720	720	720	92.7
12/80	SYSTEM	100.0	100.0	100.0	100.0	95.00		744	744	744	
	** PROBLEMS/SOLUTIONS/COMMENTS										
		DURING JULY THROUGH DECEMBER THE FGD SYSTEM OPERATED WITH NO PROBLEMS.									
1/81	SYSTEM							744			
2/81	SYSTEM							672			
3/81	SYSTEM							744			

EPA UTILITY FGD SURVEY: OCTOBER - DECEMBER 1981

ELECTRIC POWER DEVELOPMENT: ISOGO 2 (CONT.)

PERIOD	MODULE AVAILABILITY	OPERABILITY	RELIABILITY	UTILIZATION	% REMOVAL SO2	% REMOVAL PART.	PER HOURS	BOILER HOURS	FGD HOURS	CAP. FACTOR

** PROBLEMS/SOLUTIONS/COMMENTS

THE FIRST QUARTER 1981 DATA IS NOT AVAILABLE AT THIS TIME; HOWEVER THE DATA WILL BE AVAILABLE IN THE SECOND QUARTER 1981 REPORT.

SECTION 15
DESIGN AND PERFORMANCE DATA FOR OPERATIONAL FOREIGN FGD SYSTEMS

COMPANY NAME	ELECTRIC POWER DEVELOPMENT	
PLANT NAME	TAKASAGO	
UNIT NUMBER	1	
CITY	TAKASAGO	
COUNTRY	JAPAN	
REGULATORY CLASSIFICATION	******	
PARTICULATE EMISSION LIMITATION - NG/J	37.	(.086 LB/MMBTU)
SO2 EMISSION LIMITATION - NG/J	150.	(.350 LB/MMBTU)
NOX EMISSION LIMITATION - NG/J	******	(****** LB/MMBTU)
NET PLANT GENERATING CAPACITY - MW	230	
GROSS UNIT GENERATING CAPACITY - MW	250	
NET UNIT GENERATING CAPACITY W/FGD - MW	230	
NET UNIT GENERATING CAPACITY WO/FGD - MW	238	
EQUIVALENT SCRUBBED CAPACITY - MW	250	
** UNIT DATA - BOILER AND STACK		
BOILER SUPPLIER	MITSUBISHI	
BOILER TYPE	******	
BOILER SERVICE LOAD	BASE	
DESIGN BOILER FLUE GAS FLOW - CU.M/S	365.25	(774000 ACFM)
BOILER FLUE GAS TEMPERATURE - C	154.4	(310 F)
STACK HEIGHT - M	180.	(590 FT)
STACK SHELL	CARBON STEEL	
STACK TOP DIAMETER - M	3.6	(11.9 FT)
** FUEL DATA		
FUEL TYPE	COAL	
FUEL GRADE	******	
AVERAGE HEAT CONTENT - J/G	25958.	(11160 BTU/LB)
RANGE HEAT CONTENT - BTU/LB		11160-11520
AVERAGE ASH CONTENT - %	22.00	
RANGE ASH CONTENT - %	******	
AVERAGE MOISTURE CONTENT - %	7.00	
RANGE MOISTURE CONTENT - %	******	
AVERAGE SULFUR CONTENT - %	1.80	
RANGE SULFUR CONTENT - %	******	
AVERAGE CHLORIDE CONTENT - %	********	
RANGE CHLORIDE CONTENT - %	******	
*** PARTICLE CONTROL		
** MECHANICAL COLLECTOR		
NUMBER	0	
TYPE	NONE	
** ESP		
NUMBER	1	
TYPE	COLD SIDE	
SUPPLIER	MITSUBISHI HEAVY INDUSTRIES	
INLET FLUE GAS CAPACITY - CU.M/S	344.3	(729507 ACFM)
INLET FLUE GAS TEMPERATURE - C	154.4	(310 F)
PARTICLE REMOVAL EFFICENCY - %	99.5	
** PARTICLE SCRUBBER		
NUMBER	1	
NUMBER OF SPARES	0	
GENERIC TYPE	VENTURI TOWER	
SPECIFIC TYPE	NR	
TRADE NAME/COMMON NAME	NR	
SUPPLIER	MITSUI-CHEMICO	
DIMENSIONS - FT	37.7 DIA X 62.3	
SHELL GENERIC MATERIAL	CARBON STEEL	
SHELL SPECIFIC MATERIAL	AISI 1110	
LINER GENERIC MATERIAL	CORRISION RESISTANT	
GAS CONTACTING DEVICE TYPE	NONE	
NUMBER OF CONTACTING ZONES	1	
LIQUID RECIRCULATION RATE - LITER/S	1228.8	(19505 GPM)
L/G RATIO - LITER/CU.M	6.5	(48.6 GAL/1000ACF)
PRESSURE DROP - KPA	1.5	(5.9 IN-H2O)

ELECTRIC POWER DEVELOPMENT: TAKASAGO 1 (CONT.)

INLET GAS FLOW RATE - CU.M/S	260.5	(552000 ACFM)
INLET GAS TEMPERATURE - C	154.4	(310 F)
SO2 REMOVAL EFFICIENCY - %	56.0	
PARTICLE REMOVAL EFFICIENCY - %	50.0	

*** FGD SYSTEM

** GENERAL DATA

SALEABLE PRODUCT/THROWAWAY PRODUCT	SALEABLE PRODUCT
SO2 REMOVAL MODE	WET SCRUBBING
PROCESS TYPE	LIMESTONE
SYSTEM SUPPLIER	MITSUI-CHEMICO
DEVELOPMENT LEVEL	FULL SCALE
NEW/RETROFIT	RETROFIT
UNIT DESIGN SO2 REMOVAL EFFICIENCY - %	93.00
ENERGY CONSUMPTION - %	3.2
CURRENT STATUS	1
INITIAL START-UP	2/75

** DESIGN AND OPERATING PARAMETERS

** QUENCHER/PRESATURATOR

CONSTRUCTION MATERIAL GENERIC TYPE	NR
CONSTRUCTION MATERIAL SPECIFIC TYPE	NR

** ABSORBER

NUMBER	1	
NUMBER OF SPARES	0	
GENERIC TYPE	VENTURI TOWER	
SPECIFIC TYPE	NR	
TRADE NAME/COMMON TYPE	NR	
SUPPLIER	MITSUI/CHEMICO	
DIMENSIONS - FT	45.9 DIA X 78.7	
SHELL GENERIC MATERIAL	CARBON STEEL	
SHELL SPECIFIC MATERIAL	NR	
SHELL MATERIAL TRADE NAME/COMMON TYPE	N/A	
LINER GENERIC MATERIAL	NR	
LINER SPECIFIC MATERIAL	NR	
LINER MATERIAL TRADE NAME/COMMON TYPE	NR	
GAS CONTACTING DEVICE TYPE	NONE	
NUMBER OF CONTACTING ZONES	1	
LIQUID RECIRCULATION RATE - LITER/S	2566.	(40727 GPM)
L/G RATIO - L/CU.M	6.5	(48.6 GAL/1000 ACF)
GAS-SIDE PRESSURE DROP - KPA	1.5	(5.9 IN-H2O)
INLET GAS TEMPERATURE - C	55.0	(131 F)
SO2 REMOVAL EFFICIENCY - %	85.0	

** ABSORBER

NUMBER	1	
GENERIC TYPE	VENTURI TOWER	
SPECIFIC TYPE	NR	
TRADE NAME/COMMON TYPE	NR	
SUPPLIER	MITSUI/CHEMICO	
DIMENSIONS - FT	26.2 DIA X 82.3	
SHELL GENERIC MATERIAL	CARBON STEEL	
SHELL SPECIFIC MATERIAL	NR	
SHELL MATERIAL TRADE NAME/COMMON TYPE	N/A	
LINER GENERIC MATERIAL	NR	
LINER SPECIFIC MATERIAL	NR	
LINER MATERIAL TRADE NAME/COMMON TYPE	NR	
GAS CONTACTING DEVICE TYPE	NONE	
NUMBER OF CONTACTING ZONES	1	
LIQUID RECIRCULATION RATE - LITER/S	610.	(9689 GPM)
INLET GAS FLOW - CU. M/S	69.37	(147000 ACFM)
INLET GAS TEMPERATURE - C	154.4	(310 F)
SO2 REMOVAL EFFICIENCY - %	63.0	

** ABSORBER

NUMBER	2
GENERIC TYPE	SPRAY TOWER
SPECIFIC TYPE	NR

ELECTRIC POWER DEVELOPMENT: TAKASAGO 1 (CONT.)

TPADE NAME/COMMON TYPE	NR	
SUPPLIER	MITSUI/CHEMICO	
DIMENSIONS - FT	19.7 DIA X 65.0	
SHELL GENERIC MATERIAL	CARBON STEEL	
SHELL SPECIFIC MATERIAL	NR	
SHELL MATERIAL TRADE NAME/COMMON TYPE	N/A	
LINER GENERIC MATERIAL	NR	
LINER SPFCIFIC MATERIAL	NR	
LINER MATERIAL TPADE NAME/COMMON TYPE	NR	
GAS CONTACTING DEVICE TYPE	NONE	
NUMBER OF CONTACTING ZONES	1	
LIQUID RECIRCULATION RATE - LITER/S	9986.	(***** GPM)
INLET GAS FLOW - CU. M/S	18.26	(38586 ACFM)
INLET GAS TEMPERATURE - C	154.4	(310 F)

** MIST ELIMINATOR

PRE-MIST ELIMINATOR/MIST ELIMINATOR	PRIMARY COLLECTOR
GENERIC TYPE	IMPINGEMENT
SPECIFIC TYPE	BAFFLE
TRADE NAME/COMMON TYPE	CLOSED VANE
NUMBER OF STAGES	4
NUMBER OF PASSES PER STAGE	4
CONSTRUCTION MATERIAL GENERIC TYPE	NR
CONSTRUCTION MATERIAL SPECIFIC TYPE	NR
WASH WATER SOURCE	BLENDED

** REHEATER

NUMBER	1	
GENERIC TYPE	DIRECT COMBUSTION	
SPECIFIC TYPE	NR	
TRADE NAME/COMMON TYPE	OIL	
INLET FLUE GAS TEMPERATURE - C	120.0	(248 F)
CONSTRUCTION MATERIAL GENERIC TYPE	NR	
CONSTRUCTION MATERIAL SPECIFIC TYPE	NR	

** FANS

FUNCTION	BOOSTER

** FANS

APPLICATION	OXIDATION BLOWER

** DAMPERS

FUNCTION	NR
GENERIC TYPE	NR
SPECIFIC TYPE	NR
CONSTRUCTION MATERIAL GENERIC TYPE	NR
CONSTRUCTION MATERIAL SPECIFIC TYPE	NR
LINER GENERIC MATERIAL TYPE	NR
LINER SPECIFIC MATERIAL TYPE	NR

** REAGENT FREPARATION EQUIPMENT

FUNCTION	WET BALL MILL
DEVICE	NR
DEVICE TYPE	NR

** TANKS

SERVICE	NUMBER
CENTRIFUGE OVERFLOW	2
ABSOPBENT MAKEUP	1
CENTRIFUGE FEED	1
PRIMARY LIGUOR	1
ABSORBER FEED	1

** PUMPS

SERVICE	NUMBER
CIRCULATION	5
PH ADJUSTER CIRCULATION	3
REACTOR CIRCULATION	3

ELECTRIC POWER DEVELOPMENT: TAKASAGO 1 (CONT.)

** SOLIDS CONCENTRATING/DEWATERING
DEVICE — CENTRIFUGE
NUMBER — 7
OUTLET STREAM CHARACTERISTICS — 90% SOLIDS

** SOLIDS CONCENTRATING/DEWATERING
DEVICE — THICKENER
OUTLET STREAM CHARACTERISTICS — 20% SOLIDS

*** SALEABLE BYPRODUCTS
NATURE — GYPSUM
FULL LOAD QUANTITY - M T/H — 8.62 (9.50 TPH)

*** SLUDGE

** TREATMENT
METHOD — FORCED OXIDATION
DEVICE — OXIDATION TANK
PROPRIETARY PROCESS — N/A

** DISPOSAL
NATURE — NR
TYPE — NR
SITE TREATMENT — NR

** PROCESS CONTROL AND INSTRUMENTATION
CHEMICAL PARAMETERS — FLUE GAS VOLUME & SO2 CONCENTRATION

** WATER BALANCE
WATER LOOP TYPE — OPEN
POND SEEPAGE/RUNOFF WATER LOSS - LITERS/S — 40
MAKEUP WATER ADDITION - LITERS/S — 13.1 (208 GPM)

PERFORMANCE DATA

PERIOD	MODULE	AVAILABILITY	OPERABILITY	RELIABILITY	UTILIZATION	% REMOVAL SO2	% REMOVAL PART.	PER HOURS	BOILER HOURS	FGD HOURS	CAP. FACTOR
2/75	SYSTEM	96.9			88.8			672	616	597	

** PROBLEMS/SOLUTIONS/COMMENTS

THE FGD SYSTEM WAS DOWN ONCE DUE TO A PIPING FLANGE LEAK.

3/75	SYSTEM	100.0			48.4			744	360	360	
4/75	SYSTEM	100.0			44.1			720	318	318	

** PROBLEMS/SOLUTIONS/COMMENTS

THE BOILER WAS TAKEN OFF-LINE FOR ANNUAL MAINTENANCE DURING MARCH AND APRIL.

5/75	SYSTEM	100.0			96.4			744	717	717	
6/75	SYSTEM	97.9			97.9			720	720	705	
7/75	SYSTEM	98.0			97.8			744	743	723	
8/75	SYSTEM	98.0			98.0			744	744	729	
9/75	SYSTEM	95.7			91.7			720	690	660	

ELECTRIC POWER DEVELOPMENT: TAKASAGO 1 (CONT.)

PERIOD	MODULE	AVAILABILITY	OPERABILITY	RELIABILITY	UTILIZATION	% REMOVAL SO2	% REMOVAL PART.	PER HOURS	BOILER HOURS	FGD HOURS	CAP. FACTOR
		PERFORMANCE DATA									
	** PROBLEMS/SOLUTIONS/COMMENTS										
		SYSTEM DOWN TIME FROM JUNE THROUGH SEPTEMBER WAS DUE TO MIST ELIMINATOR SCALING.									
10/75	SYSTEM		95.2		95.2			744	744	708	
	** PROBLEMS/SOLUTIONS/COMMENTS										
		FAN VIBRATIONS CAUSED A SYSTEM OUTAGE DURING THE MONTH.									
11/75	SYSTEM		98.5		98.5			720	720	709	
	** PROBLEMS/SOLUTIONS/COMMENTS										
		MIST ELIMINATOR SCALING WAS ENCOUNTERED IN NOVEMBER.									
12/75	SYSTEM		95.9		92.2			744	715	686	
1/76	SYSTEM		100.0		100.0			744	744	744	
2/76	SYSTEM		95.2		90.8			696	664	632	
	** PROBLEMS/SOLUTIONS/COMMENTS										
		DURING FEBRUARY, THE SYSTEM AGAIN ENCOUNTERED MIST ELIMINATOR SCALING.									
3/76	SYSTEM		100.0		92.3			744	687	687	
4/76	SYSTEM		100.0		30.4			720	219	219	
5/76	SYSTEM		100.0		100.0			744	744	744	
6/76	SYSTEM		100.0		100.0			720	720	720	
7/76	SYSTEM		100.0		100.0			744	744	744	
8/76	SYSTEM							744	744		
9/76	SYSTEM		100.0		100.0			720	720	720	
10/76	SYSTEM		91.7		91.7			744	744	682	
	** PROBLEMS/SOLUTIONS/COMMENTS										
		THE SYSTEM WAS TAKEN OFF-LINE FOR CLEANING OF THE FIRST STAGE SCRUBBER.									
11/76	SYSTEM		99.3		99.3			720	720	715	
	** PROBLEMS/SOLUTIONS/COMMENTS										
		REPAIR OF A DUCT FORCED ONE SYSTEM OUTAGE DURING THE MONTH.									
12/76	SYSTEM		98.9		98.9			744	744	736	
	** PROBLEMS/SOLUTIONS/COMMENTS										
		A DECEMBER OUTAGE WAS DUE TO THE REPAIR OF A SPRAY PIPE.									
1/77	SYSTEM		99.3		99.3			744	744	739	

PERFORMANCE DATA

PERIOD	MODULE	AVAILABILITY	OPERABILITY	RELIABILITY	UTILIZATION	% REMOVAL SO2	% REMOVAL PART.	PER HOURS	BOILER HOURS	FGD HOURS	CAP. FACTOR
	** PROBLEMS/SOLUTIONS/COMMENTS										
			THE SYSTEM WAS TAKEN OFF-LINE ONCE FOR CLEANING OF THE FIRST STAGE SCRUBBER.								
2/77	SYSTEM		100.0		100.0			672	672	672	
3/77	SYSTEM				.0			744	0	0	
	** PROBLEMS/SOLUTIONS/COMMENTS										
			THE SYSTEM WAS OFF DURING MARCH FOR ANNUAL BOILER MAINTENANCE.								
4/77	SYSTEM		100.0		71.3			720	513	513	
5/77	SYSTEM		98.7		98.7			744	744	734	
	** PROBLEMS/SOLUTIONS/COMMENTS										
			FAN VIBRATIONS CAUSED ONE SYSTEM OUTAGE DURING MAY.								
6/77	SYSTEM		100.0		100.0			720	720	720	
7/77	SYSTEM		100.0		96.4			744	717	717	
	** PROBLEMS/SOLUTIONS/COMMENTS										
			THE FIRST STAGE ABSORBER WAS CLEANED DURING JULY.								
8/77	SYSTEM		100.0		100.0			744	744	744	
9/77	SYSTEM		100.0		100.0			720	720	720	
10/77	SYSTEM		94.2		94.2			744	744	701	
	** PROBLEMS/SOLUTIONS/COMMENTS										
			THE SYSTEM WAS OFF LINE PART OF THIS MONTH FOR CLEANING OF THE SCRUBBERS AND REACTORS.								
11/77	SYSTEM		100.0		100.0			720	720	720	
12/77	SYSTEM		100.0		100.0			744	744	744	
1/78	SYSTEM		100.0		100.0			744	744	744	
	** PROBLEMS/SOLUTIONS/COMMENTS										
			THE FIRST REACTOR WAS CLEANED THIS MONTH.								
4/78	SYSTEM							720			
5/78	SYSTEM							744			
6/78	SYSTEM							720			
7/78	SYSTEM							744			
8/78	SYSTEM							744			
9/78	SYSTEM							720			
10/78	SYSTEM							744			

ELECTRIC POWER DEVELOPMENT: TAKASAGO 1 (CONT.)

PERIOD	MODULE	AVAILABILITY	OPERABILITY	RELIABILITY	UTILIZATION	% REMOVAL SO2	% REMOVAL PART.	PER HOURS	BOILER HOURS	FGD HOURS	CAP. FACTOR
		PERFORMANCE DATA									
11/78	SYSTEM							720			
12/78	SYSTEM							744			
1/79	SYSTEM							744			
2/79	SYSTEM							672			
3/79	SYSTEM							744			

** PROBLEMS/SOLUTIONS/COMMENTS

DURING APRIL 1978 THROUGH MARCH 1979 NO FORCED OUTAGES OCCURRED. THE FGD SYSTEM AVAILABILITY WAS 99.9%, AND LOGGED A TOTAL OF 7823.4 HOURS OF OPERATION WITH 6.1 HOURS OF SCHEDULED OUTAGE TIME.

4/79	SYSTEM							720			
6/79	SYSTEM							720			
7/79	SYSTEM							744			
8/79	SYSTEM							744			
9/79	SYSTEM							720			
10/79	SYSTEM							744			
11/79	SYSTEM							720			
12/79	SYSTEM							744			
1/80	SYSTEM							744			
2/80	SYSTEM							696			
3/80	SYSTEM							744			

** PROBLEMS/SOLUTIONS/COMMENTS

NO INFORMATION WAS AVAILABLE FOR THE APRIL 1979 THROUGH MARCH 1980 PERIOD.

4/80	SYSTEM	100.0	100.0	100.0	31.1			720	224	224	

** PROBLEMS/SOLUTIONS/COMMENTS

THE BOILER WAS SHUTDOWN ON MARCH 29 FOR ANNUAL MAINTENANCE. THE UNIT REMAINED OFF LINE THROUGH APRIL 21. WHEN OPERATIONS COMMENCED THE FGD SYSTEM OPERATED WITH THE BOILER FOR THE REST OF THE MONTH.

5/80	SYSTEM	100.0	100.0	100.0	100.0			744	744	744	
6/80	SYSTEM	100.0	100.0	100.0	100.0			720	720	720	

** PROBLEMS/SOLUTIONS/COMMENTS

THE FGD SYSTEM EXPERIENCED NO PROBLEMS DURING THE MAY-JUNE PERIOD.

7/80	SYSTEM	100.0	100.0	100.0	100.0	93.00		744	744	744	83.4
8/80	SYSTEM	100.0	100.0	100.0	100.0	92.80		744	744	744	83.6
9/80	SYSTEM	100.0	100.0	100.0	100.0	93.00		720	720	720	83.3

EPA UTILITY FGD SURVEY: OCTOBER - DECEMBER 1981

ELECTRIC POWER DEVELOPMENT: TAKASAGO 1 (CONT.)

PERFORMANCE DATA

PERIOD	MODULE	AVAILABILITY	OPERABILITY	RELIABILITY	UTILIZATION	% REMOVAL SO2	% REMOVAL PART.	PER HOURS	BOILER HOURS	FGD HOURS	CAP. FACTOR
	** PROBLEMS/SOLUTIONS/COMMENTS										
		NO PROBLEMS WERE ENCOUNTERED DURING THE THIRD QUARTER 1980.									
10/80	SYSTEM	99.5	99.5	99.5	99.5	92.70		744	744	740	85.3
	** PROBLEMS/SOLUTIONS/COMMENTS										
		THE FGD SYSTEM WAS SHUT DOWN FOR APPROXIMATELY FOUR HOURS IN OCTOBER FOR AN INSPECTION OF THE SECOND SCRUBBER OUTLET DUCT AND THE MIST ELIMINATOR. THE INSPECTION REVEALED THAT NO PROBLEM EXISTED.									
11/80	SYSTEM	100.0	100.0	100.0	100.0	92.70		720	720	720	85.0
12/80	SYSTEM	100.0	100.0	100.0	100.0	92.70		744	744	744	89.9
	** PROBLEMS/SOLUTIONS/COMMENTS										
		NO PROBLEMS WERE ENCOUNTERED DURING NOVEMBER AND DECEMBER.									
1/81	SYSTEM							744			
2/81	SYSTEM							672			
3/81	SYSTEM							744			
	** PROBLEMS/SOLUTIONS/COMMENTS										
		THE FIRST QUARTER 1981 DATA IS NOT AVAILABLE AT THIS TIME; HOWEVER THE DATA WILL BE AVAILABLE IN THE SECOND QUARTER 1981 REPORT.									

SECTION 15
DESIGN AND PERFORMANCE DATA FOR OPERATIONAL FOREIGN FGD SYSTEMS

COMPANY NAME	ELECTRIC POWER DEVELOPMENT	
PLANT NAME	TAKASAGO	
UNIT NUMBER	2	
CITY	TAKASAGO	
COUNTRY	JAPAN	
REGULATORY CLASSIFICATION	******	
PARTICULATE EMISSION LIMITATION - NG/J	37.	(.086 LB/MMBTU)
SO2 EMISSION LIMITATION - NG/J	150.	(.350 LB/MMBTU)
NOX EMISSION LIMITATION - NG/J	******	(****** LB/MMBTU)
NET PLANT GENERATING CAPACITY - MW	230	
GROSS UNIT GENERATING CAPACITY - MW	250	
NET UNIT GENERATING CAPACITY W/FGD - MW	230	
NET UNIT GENERATING CAPACITY WO/FGD - MW	238	
EQUIVALENT SCRUBBED CAPACITY - MW	250	
** UNIT DATA - BOILER AND STACK		
BOILER SUPPLIER	MITSUBISHI	
BOILER TYPE	******	
BOILER SERVICE LOAD	BASE	
DESIGN BOILER FLUE GAS FLOW - CU.M/S	365.25	(774000 ACFM)
BOILER FLUE GAS TEMPERATURE - C	154.4	(310 F)
STACK HEIGHT - M	180.	(590 FT)
STACK SHELL	CARBON STEEL	
STACK TOP DIAMETER - M	3.6	(11.9 FT)
** FUEL DATA		
FUEL TYPE	COAL	
FUEL GRADE	******	
AVERAGE HEAT CONTENT - J/G	25958.	(11160 BTU/LB)
RANGE HEAT CONTENT - BTU/LB		11160-11520
AVERAGE ASH CONTENT - %	22.00	
RANGE ASH CONTENT - %	******	
AVERAGE MOISTURE CONTENT - %	7.00	
RANGE MOISTURE CONTENT - %	******	
AVERAGE SULFUR CONTENT - %	1.80	
RANGE SULFUR CONTENT - %	******	
AVERAGE CHLORIDE CONTENT - %	********	
RANGE CHLORIDE CONTENT - %	******	
*** PARTICLE CONTROL		
** MECHANICAL COLLECTOR		
NUMBER	0	
TYPE	NONE	
** ESP		
NUMBER	1	
TYPE	COLD SIDE	
SUPPLIER	MITSUBISHI HEAVY INDUSTRIES	
INLET FLUE GAS CAPACITY - CU.M/S	344.3	(729507 ACFM)
INLET FLUE GAS TEMPERATURE - C	154.4	(310 F)
PARTICLE REMOVAL EFFICENCY - %	99.5	
** PARTICLE SCRUBBER		
NUMBER	1	
NUMBER OF SPARES	0	
GENERIC TYPE	VENTURI TOWER	
SPECIFIC TYPE	NR	
TRADE NAME/COMMON NAME	NR	
SUPPLIER	MITSUI-CHEMICO	
DIMENSIONS - FT	37.7 DIA X 62.3	
SHELL GENERIC MATERIAL	CARBON STEEL	
SHELL SPECIFIC MATERIAL	AISI 1110	
LINER GENERIC MATERIAL	CORRISION RESISTANT	
GAS CONTACTING DEVICE TYPE	NONE	
NUMBER OF CONTACTING ZONES	1	
LIQUID RECIRCULATION RATE - LITER/S	1542.2	(24480 GPM)
L/G RATIO - LITER/CU.M	6.5	(48.6 GAL/1000ACF)
PRESSURE DROP - KPA	1.5	(5.9 IN-H2O)

ELECTRIC POWER DEVELOPMENT: TAKASAGO 2 (CONT.)

INLET GAS FLOW RATE - CU.M/S	260.5	(552000 ACFM)
INLET GAS TEMPERATURE - C	154.4	(310 F)
SO2 REMOVAL EFFICIENCY - %	56.0	
PARTICLE REMOVAL EFFICIENCY - %	50.0	

*** FGD SYSTEM

** GENERAL DATA

SALEABLE PRODUCT/THROWAWAY PRODUCT	SALEABLE PRODUCT
SO2 REMOVAL MODE	WET SCRUBBING
PROCESS TYPE	LIMESTONE
SYSTEM SUPPLIER	MITSUI-CHEMICO
DEVELOPMENT LEVEL	FULL SCALE
NEW/RETROFIT	RETROFIT
UNIT DESIGN SO2 REMOVAL EFFICIENCY - %	93.00
ENERGY CONSUMPTION - %	3.2
CURRENT STATUS	1
INITIAL START-UP	3/76

** DESIGN AND OPERATING PARAMETERS

** QUENCHER/PRESATURATOR

CONSTRUCTION MATERIAL GENERIC TYPE	NR
CONSTRUCTION MATERIAL SPECIFIC TYPE	NR

** ABSORBER

NUMBER	1	
NUMBER OF SPARES	0	
GENERIC TYPE	VENTURI TOWER	
SPECIFIC TYPE	NR	
TRADE NAME/COMMON TYPE	NR	
SUPPLIER	MITSUI/CHEMICO	
DIMENSIONS - FT	45.9 DIA X 78.7	
SHELL GENERIC MATERIAL	CARBON STEEL	
SHELL SPECIFIC MATERIAL	NR	
SHELL MATERIAL TRADE NAME/COMMON TYPE	N/A	
LINER GENERIC MATERIAL	NR	
LINER SPECIFIC MATERIAL	NR	
LINER MATERIAL TRADE NAME/COMMON TYPE	NR	
GAS CONTACTING DEVICE TYPE	NONE	
NUMBER OF CONTACTING ZONES	1	
LIQUID RECIRCULATION RATE - LITER/S	2066.	(32801 GPM)
L/G RATIO - L/CU.M	6.5	(48.6 GAL/1000 ACF)
GAS-SIDE PRESSURE DROP - KPA	1.5	(5.9 IN-H2O)
INLET GAS FLOW - CU. M/S	280.24	(593855 ACFM)
INLET GAS TEMPERATURE - C	55.0	(131 F)
SO2 REMOVAL EFFICIENCY - %	85.0	

** ABSORBER

NUMBER	1	
GENERIC TYPE	VENTURI TOWER	
SPECIFIC TYPE	NR	
TRADE NAME/COMMON TYPE	NR	
SUPPLIER	MITSUI/CHEMICO	
DIMENSIONS - FT	26.2 DIA X 82.3	
SHELL GENERIC MATERIAL	CARBON STEEL	
SHELL SPECIFIC MATERIAL	NR	
SHELL MATERIAL TRADE NAME/COMMON TYPE	N/A	
LINER GENERIC MATERIAL	NR	
LINER SPECIFIC MATERIAL	NR	
LINER MATERIAL TRADE NAME/COMMON TYPE	NR	
GAS CONTACTING DEVICE TYPE	NONE	
NUMBER OF CONTACTING ZONES	1	
LIQUID RECIRCULATION RATE - LITER/S	743.	(11799 GPM)
INLET GAS FLOW - CU. M/S	69.37	(147000 ACFM)
INLET GAS TEMPERATURE - C	154.4	(310 F)
SO2 REMOVAL EFFICIENCY - %	63.0	

** ABSORBER

NUMBER	1
GENERIC TYPE	SPRAY TOWER

ELECTRIC POWER DEVELOPMENT: TAKASAGO 2 (CONT.)

SPECIFIC TYPE	NR	
TRADE NAME/COMMON TYPE	NR	
SUPPLIER	MITSUI/CHEMICO	
SHELL GENERIC MATERIAL	CARBON STEEL	
SHELL SPECIFIC MATERIAL	NR	
SHELL MATERIAL TRADE NAME/COMMON TYPE	N/A	
LINER GENERIC MATERIAL	NR	
LINER SPECIFIC MATERIAL	NR	
LINER MATERIAL TRADE NAME/COMMON TYPE	NR	
GAS CONTACTING DEVICE TYPE	NONE	
NUMBER OF CONTACTING ZONES	1	
LIQUID RECIRCULATION RATE - LITER/S	19639.	(***** GPM)
INLET GAS FLOW - CU. M/S	36.51	(77372 ACFM)
INLET GAS TEMPERATURE - C	154.4	(310 F)

** MIST ELIMINATOR

PRE-MIST ELIMINATOR/MIST ELIMINATOR	PRIMARY COLLECTOR
GENERIC TYPE	IMPINGEMENT
SPECIFIC TYPE	BAFFLE
TRADE NAME/COMMON TYPE	CLOSED VANE
NUMBER OF STAGES	4
NUMBER OF PASSES PER STAGE	4
CONSTRUCTION MATERIAL GENERIC TYPE	NR
CONSTRUCTION MATERIAL SPECIFIC TYPE	NR
WASH WATER SOURCE	BLENDED

** REHEATER

NUMBER	1	
GENERIC TYPE	DIRECT COMBUSTION	
SPECIFIC TYPE	NR	
TRADE NAME/COMMON TYPE	OIL	
INLET FLUE GAS TEMPERATURE - C	120.0	(248 F)
CONSTRUCTION MATERIAL GENERIC TYPE	NR	
CONSTRUCTION MATERIAL SPECIFIC TYPE	NR	

** FANS

FUNCTION	BOOSTER

** FANS

APPLICATION	OXIDATION BLOWER

** DAMPERS

FUNCTION	NR
GENERIC TYPE	NR
SPECIFIC TYPE	NR
CONSTRUCTION MATERIAL GENERIC TYPE	NR
CONSTRUCTION MATERIAL SPECIFIC TYPE	NR
LINER GENERIC MATERIAL TYPE	NR
LINER SPECIFIC MATERIAL TYPE	NR

** REAGENT PREPARATION EQUIPMENT

FUNCTION	WET BALL MILL
DEVICE	NR
DEVICE TYPE	NR

** TANKS

SERVICE	NUMBER
CENTRIFUGE OVERFLOW	2
ABSORBENT MAKEUP	1
CENTRIFUGE FEED	1
PRIMARY LIQUOR	1
ABSORBER FEED	1

** PUMPS

SERVICE	NUMBER
CIRCULATION	5
PH ADJUSTER CIRCULATION	2
REACTOR CIRCULATION	1

ELECTRIC POWER DEVELOPMENT: TAKASAGO 2 (CONT.)

** SOLIDS CONCENTRATING/DEWATERING
DEVICE — CENTRIFUGE
NUMBER — 7
OUTLET STREAM CHARACTERISTICS — 90% SOLIDS

** SOLIDS CONCENTRATING/DEWATERING
DEVICE — THICKENER
OUTLET STREAM CHARACTERISTICS — 20% SOLIDS

*** SALEABLE BYPRODUCTS
NATURE — GYPSUM
FULL LOAD QUANTITY - M T/H — 8.62 (9.50 TPH)

*** SLUDGE

** TREATMENT
METHOD — FORCED OXIDATION
DEVICE — OXIDATION TANK
PROPRIETARY PROCESS — N/A

** DISPOSAL
NATURE — NR
TYPE — NR
SITE TREATMENT — NR

** PROCESS CONTROL AND INSTRUMENTATION
CHEMICAL PARAMETERS — FLUE GAS VOLUME & SO2 CONCENTRATION

** WATER BALANCE
WATER LOOP TYPE — OPEN
POND SEEPAGE/RUNOFF WATER LOSS - LITERS/S — 40
MAKEUP WATER ADDITION - LITERS/S — 13.1 (208 GPM)

PERFORMANCE DATA

PERIOD	MODULE	AVAILABILITY	OPERABILITY	RELIABILITY	UTILIZATION	% REMOVAL SO2	% REMOVAL PART.	PER HOURS	BOILER HOURS	FGD HOURS	CAP. FACTOR
3/76	SYSTEM		100.0		100.0			744	744	720	
4/76	SYSTEM		100.0		100.0			720	720	720	
5/76	SYSTEM		100.0		29.0			744	216	216	
6/76	SYSTEM		100.0		87.8			720	632	632	
	** PROBLEMS/SOLUTIONS/COMMENTS										
	THE SYSTEM WAS DOWN FOR PART OF MAY AND JUNE FOR ANNUAL BOILER MAINTENANCE.										
7/76	SYSTEM		100.0		100.0			744	744	744	
8/76	SYSTEM		100.0		100.0			744	744	744	
9/76	SYSTEM		100.0		100.0			720	720	720	
10/76	SYSTEM		94.2		94.2			744	744	701	
	** PROBLEMS/SOLUTIONS/COMMENTS										
	OUTAGE TIME DURING OCTOBER WAS NECESSARY FOR DUCT CLEANING.										
11/76	SYSTEM		100.0		100.0			720	720	720	
12/76	SYSTEM		99.3		99.3			744	744	739	

ELECTRIC POWER DEVELOPMENT: TAKASAGO 2 (CONT.)

PERIOD	MODULE	AVAILABILITY	OPERABILITY	RELIABILITY	UTILIZATION	% REMOVAL SO2	% REMOVAL PART.	PER HOURS	BOILER HOURS	FGD HOURS	CAP. FACTOR
		PERFORMANCE DATA									
	** PROBLEMS/SOLUTIONS/COMMENTS										
		THE SYSTEM WAS DOWN BRIEFLY FOR REPAIR OF A GYPSUM CONVEYOR.									
1/77	SYSTEM		100.0		100.0			744	744	744	
2/77	SYSTEM		88.2		88.2			672	672	593	
3/77	SYSTEM		98.7		98.7			744	744	734	
	** PROBLEMS/SOLUTIONS/COMMENTS										
		OUTAGE TIME IN FEBRUARY & MARCH WAS NEEDED FOR CLEANING OF A PH CONTROLLER.									
4/77	SYSTEM		100.0		100.0			720	720	720	
5/77	SYSTEM		100.0		51.6			744	384	384	
6/77	SYSTEM		100.0		3.3			720	240	240	
7/77	SYSTEM		100.0		100.0			744	744	744	
8/77	SYSTEM		100.0		100.0			744	744	744	
9/77	SYSTEM		100.0		100.0			720	720	720	
10/77	SYSTEM		100.0		100.0			744	744	744	
11/77	SYSTEM		89.2		89.2			720	720	642	
	** PROBLEMS/SOLUTIONS/COMMENTS										
		CLEANING OF THE PH CONTROLLER CAUSED ONE OUTAGE DURING NOVEMBER.									
		A REACTOR WAS ALSO CLEANED THIS MONTH.									
12/77	SYSTEM		100.0		100.0			744	744	744	
1/78	SYSTEM							744	744		
2/78	SYSTEM							672			
3/78	SYSTEM							720			
4/78	SYSTEM							720			
5/78	SYSTEM							744			
6/78	SYSTEM							720			
7/78	SYSTEM							744			
8/78	SYSTEM							744			
9/78	SYSTEM							720			
10/78	SYSTEM							744			
11/78	SYSTEM							720			
12/78	SYSTEM							744			
1/79	SYSTEM							744			

ELECTRIC POWER DEVELOPMENT: TAKASAGO 2 (CONT.)

PERIOD	MODULE	AVAILABILITY	OPERABILITY	RELIABILITY	UTILIZATION	% REMOVAL SO2	% REMOVAL PART.	PER HOURS	BOILER HOURS	FGD HOURS	CAP. FACTOR
		PERFORMANCE DATA									
2/79	SYSTEM							672			
3/79	SYSTEM							744			

** PROBLEMS/SOLUTIONS/COMMENTS

DURING THE PERIOD FROM APRIL 1978 THROUGH MARCH 1979 THE FGD SYSTEM OPERATED WITH 99.8% AVAILABILITY. THERE WERE NO FORCED OUTAGES DURING THIS TIME. A TOTAL OF 8147.4 HOURS OF FGD SYSTEM OPERATION WERE LOGGED WITH 19.5 HOURS OF SCHEDULED OUTAGE TIME.

4/79	SYSTEM							720			
5/79	SYSTEM							744			
6/79	SYSTEM							720			
7/79	SYSTEM							744			
8/79	SYSTEM							744			
9/79	SYSTEM							720			
10/79	SYSTEM							744			
11/79	SYSTEM							720			
12/79	SYSTEM							744			
1/80	SYSTEM							744			
2/80	SYSTEM							696			
3/80	SYSTEM							744			

** PROBLEMS/SOLUTIONS/COMMENTS

NO INFORMATION WAS AVAILABLE FOR THE APRIL 1979 THROUGH MARCH 1980 PERIOD.

4/80	SYSTEM	100.0	100.0	100.0	100.0			720	720	720	
5/80	SYSTEM	100.0	100.0	100.0	100.0			744	744	744	

** PROBLEMS/SOLUTIONS/COMMENTS

DURING APRIL AND MAY THE UTILITY EXPERIENCED NO PROBLEMS WITH THE FGD SYSTEM.

6/80	SYSTEM	100.0	100.0	100.0	24.6			720	177	177	

** PROBLEMS/SOLUTIONS/COMMENTS

THE BOILER WAS SHUTDOWN FROM JUNE 3 TO JUNE 24 FOR ANNUAL MAINTENANCE. THE FGD SYSTEM OPERATED ALONG WITH THE BOILER THE REMAINDER OF THE TIME.

7/80	SYSTEM	100.0	100.0	100.0	100.0	92.80		744	744	744	83.0
8/80	SYSTEM	100.0	100.0	100.0	100.0	92.80		744	744	744	83.3
9/80	SYSTEM	100.0	100.0	100.0	100.0	93.10		720	720	720	83.4
10/80	SYSTEM	100.0	100.0	100.0	100.0	92.60		744	744	744	85.1
11/80	SYSTEM	100.0	100.0	100.0	100.0			720	720	720	84.8

ELECTRIC POWER DEVELOPMENT: TAKASAGO 2 (CONT.)

PERFORMANCE DATA

PERIOD	MODULE	AVAILABILITY	OPERABILITY	RELIABILITY	UTILIZATION	% REMOVAL SO2	% REMOVAL PART.	PER HOURS	BOILER HOURS	FGD HOURS	CAP. FACTOR
12/80	SYSTEM	100.0	100.0	100.0	87.3	92.60		744	649	649	78.4

** PROBLEMS/SOLUTIONS/COMMENTS

DURING JULY THROUGH DECEMBER NO FGD-RELATED PROBLEMS WERE EXPERIENCED.

IN DECEMBER THE BOILER WAS OUT OF SERVICE APPROXIMATELY FOUR DAYS FOR GENERAL MAINTENANCE.

1/81	SYSTEM							744			
2/81	SYSTEM							672			
3/81	SYSTEM							744			

** PROBLEMS/SOLUTIONS/COMMENTS

THE FIRST QUARTER 1981 DATA IS NOT AVAILABLE AT THIS TIME; HOWEVER THE DATA WILL BE AVAILABLE IN THE SECOND QUARTER 1981 REPORT.

SECTION 15
DESIGN AND PERFORMANCE DATA FOR OPERATIONAL FOREIGN FGD SYSTEMS

COMPANY NAME	ELECTRIC POWER DEVELOPMENT	
PLANT NAME	TAKEHARA	
UNIT NUMBER	1	
CITY	MIHARA	
COUNTRY	JAPAN	
REGULATORY CLASSIFICATION	******	
PARTICULATE EMISSION LIMITATION - NG/J	56.	(.130 LB/MMBTU)
SO2 EMISSION LIMITATION - NG/J	271.	(.630 LB/MMBTU)
NOX EMISSION LIMITATION - NG/J	******	(****** LB/MMBTU)
NET PLANT GENERATING CAPACITY - MW	231	
GROSS UNIT GENERATING CAPACITY - MW	250	
NET UNIT GENERATING CAPACITY W/FGD - MW	231	
NET UNIT GENERATING CAPACITY WO/FGD - MW	239	
EQUIVALENT SCRUBBED CAPACITY - MW	250	
** UNIT DATA - BOILER AND STACK		
BOILER SUPPLIER	BABCOCK-HITACHI	
BOILER TYPE	PULVERIZED COAL	
BOILER SERVICE LOAD	BASE	
DESIGN BOILER FLUE GAS FLOW - CU.M/S	577.13	(1223000 ACFM)
BOILER FLUE GAS TEMPERATURE - C	140.0	(284 F)
STACK HEIGHT - M	201.	(660 FT)
STACK SHELL	CARBON STEEL	
STACK TOP DIAMETER - M	3.6	(11.9 FT)
** FUEL DATA		
FUEL TYPE	COAL	
FUEL GRADE	******	
AVERAGE HEAT CONTENT - J/G	25130.	(10804 BTU/LB)
RANGE HEAT CONTENT - BTU/LB		10804-11520
AVERAGE ASH CONTENT - %	23.00	
RANGE ASH CONTENT - %	******	
AVERAGE MOISTURE CONTENT - %	9.05	
RANGE MOISTURE CONTENT - %	******	
AVERAGE SULFUR CONTENT - %	2.00	
RANGE SULFUR CONTENT - %	******	
AVERAGE CHLORIDE CONTENT - %	.05	
RANGE CHLORIDE CONTENT - %	******	
*** PARTICLE CONTROL		
** MECHANICAL COLLECTOR		
NUMBER	0	
TYPE	NONE	
** ESP		
NUMBER	1	
TYPE	COLD SIDE	
SUPPLIER	SUMITOMO HEAVY INDUSTRIES	
INLET FLUE GAS CAPACITY - CU.M/S	333.2	(706000 ACFM)
INLET FLUE GAS TEMPERATURE - C	140.0	(284 F)
PARTICLE REMOVAL EFFICENCY - %	98.0	
** PARTICLE SCRUBBER		
NUMBER	2	
GENERIC TYPE	VENTURI TOWER	
SPECIFIC TYPE	NR	
TRADE NAME/COMMON NAME	NR	
SUPPLIER	HITACHI	
LINER GENERIC MATERIAL	ORGANIC	
GAS CONTACTING DEVICE TYPE	NONE	
NUMBER OF CONTACTING ZONES	1	
LIQUID RECIRCULATION RATE - LITER/S	533.7	(8471 GPM)
L/G RATIO - LITER/CU.M	2.5	(18.7 GAL/1000ACF)
PRESSURE DROP - KPA	2.3	(9.1 IN-H2O)
INLET GAS FLOW RATE - CU.M/S	168.0	(356000 ACFM)
INLET GAS TEMPERATURE - C	140.0	(284 F)

ELECTRIC POWER DEVELOPMENT: TAKEHARA 1 (CONT.)

*** FGD SYSTEM

** GENERAL DATA

SALEABLE PRODUCT/THROWAWAY PRODUCT	SALEABLE PRODUCT
SO2 REMOVAL MODE	WET SCRUBBING
PROCESS TYPE	LIMESTONE
PROCESS ADDITIVES	NONE
SYSTEM SUPPLIER	BABCOCK-HITACHI
DEVELOPMENT LEVEL	FULL SCALE
NEW/RETROFIT	RETROFIT
UNIT DESIGN PARTICLE REMOVAL EFFICIENCY - %	91.70
UNIT DESIGN SO2 REMOVAL EFFICIENCY - %	94.20
ENERGY CONSUMPTION - %	3.2
CURRENT STATUS	1
COMMERCIAL START-UP	2/79
INITIAL START-UP	2/77

** DESIGN AND OPERATING PARAMETERS

** QUENCHER/PRESATURATOR

CONSTRUCTION MATERIAL GENERIC TYPE	NR
CONSTRUCTION MATERIAL SPECIFIC TYPE	NR

** ABSORBER

NUMBER	2	
GENERIC TYPE	TRAY TOWER	
SPECIFIC TYPE	NR	
TRADE NAME/COMMON TYPE	NR	
SUPPLIER	BABCOCK-HITACHI	
SHELL GENERIC MATERIAL	CARBON STEEL	
SHELL SPECIFIC MATERIAL	NR	
SHELL MATERIAL TRADE NAME/COMMON TYPE	N/A	
LINER GENERIC MATERIAL	ORGANIC	
LINER SPECIFIC MATERIAL	POLYESTER	
LINER MATERIAL TRADE NAME/COMMON TYPE	NR	
NUMBER OF CONTACTING ZONES	5	
LIQUID RECIRCULATION RATE - LITER/S	721.	(11448 GPM)
L/G RATIO - L/CU.M	7.0	(52.4 GAL/1000 ACF)
GAS-SIDE PRESSURE DROP - KPA	3.8	(15.2 IN-H2O)
INLET GAS FLOW - CU. M/S	164.76	(349142 ACFM)
INLET GAS TEMPERATURE - C	52.2	(126 F)

** MIST ELIMINATOR

PRE-MIST ELIMINATOR/MIST ELIMINATOR	PRIMARY COLLECTOR	
NUMBER PER SYSTEM	2	
GENERIC TYPE	IMPINGEMENT	
SPECIFIC TYPE	TUBE BANK	
TRADE NAME/COMMON TYPE	VERTICAL PARALLEL TUBE BANK	
CONFIGURATION	HORIZONTAL	
PRESSURE DROP - KPA	.1	(.4 IN-H2O)
CONSTRUCTION MATERIAL GENERIC TYPE	NR	
CONSTRUCTION MATERIAL SPECIFIC TYPE	NR	
WASH WATER SOURCE	FRESH	
WASH FREQUENCY	CONTINUOUS	
WASH RATE - L/S	1.3	(20 GAL/MIN)

** REHEATER

GENERIC TYPE	DIRECT COMBUSTION	
SPECIFIC TYPE	NR	
TRADE NAME/COMMON TYPE	OIL	
INLET FLUE GAS TEMPERATURE - C	120.0	(248 F)
CONSTRUCTION MATERIAL GENERIC TYPE	NR	
CONSTRUCTION MATERIAL SPECIFIC TYPE	NR	

** FANS

NUMBER	2
FUNCTION	BOOSTER
APPLICATION	INDUCED DRAFT
SERVICE	WET

ELECTRIC POWER DEVELOPMENT: TAKEHARA 1 (CONT.)

** DAMPERS

FUNCTION	NR
GENERIC TYPE	NR
SPECIFIC TYPE	NR
CONSTRUCTION MATERIAL GENERIC TYPE	NR
CONSTRUCTION MATERIAL SPECIFIC TYPE	NR
LINER GENERIC MATERIAL TYPE	NR
LINER SPECIFIC MATERIAL TYPE	NR

** REAGENT PREPARATION EQUIPMENT

FUNCTION	WET BALL MILL
DEVICE	NR
DEVICE TYPE	NR

** TANKS

SERVICE	NUMBER
PRESCRUBBER RECYCLE	2
SCRUBBER RECYCLE	2
FILTER LIQUID	****
SLURRY	****
OXIDATION TOWER FEED	2

** PUMPS

SERVICE	NUMBER
COOLER RECYCLE	2
ABSORBER RECYCLE	4

** SOLIDS CONCENTRATING/DEWATERING

DEVICE	CENTRIFUGE
NUMBER	9
NUMBER OF SPARES	1
CAPACITY	4 GPM
FEED STREAM CHARACTERISTICS	20% SOLIDS
OUTLET STREAM CHARACTERISTICS	88% SOLIDS

** SOLIDS CONCENTRATING/DEWATERING

DEVICE	THICKENER
NUMBER	1
CONFIGURATION	HORIZONTAL
DIMENSIONS - FT	45.0 DIA X 10.0
FEED STREAM CHARACTERISTICS	12% SOLIDS
OUTLET STREAM CHARACTERISTICS	20% SOLIDS

*** SALEABLE BYPRODUCTS

NATURE	GYPSUM
FULL LOAD QUANTITY - M T/H	9.89 (10.90 TPH)
QUALITY - %	95.0
DISPOSITION	MARKETED

*** SLUDGE

** TREATMENT

METHOD	FORCED OXIDATION
DEVICE	OXIDATION TANK
PROPRIETARY PROCESS	N/A

** DISPOSAL

NATURE	NR
TYPE	NR
SITE TREATMENT	NR

** PROCESS CONTROL AND INSTRUMENTATION

CHEMICAL PARAMETERS	PH, GAS FLOW
CONTROL LEVELS	PH 5.0-6.0

ELECTRIC POWER DEVELOPMENT: TAKEHARA 1 (CONT.)

PROCESS CONTROL MANNER AUTOMATIC

** WATER BALANCE
WATER LOOP TYPE OPEN
POND SEEPAGE/RUNOFF WATER LOSS - LITERS/S 60
MAKEUP WATER ADDITION - LITERS/S 14.9 (237 GPM)

PERFORMANCE DATA

PERIOD	MODULE	AVAILABILITY	OPERABILITY	RELIABILITY	UTILIZATION	% REMOVAL SO2	% REMOVAL PART.	PER HOURS	BOILER HOURS	FGD HOURS	CAP. FACTOR
4/78	SYSTEM							720			
5/78	SYSTEM							744			
6/78	SYSTEM							720			
7/78	SYSTEM							744			
8/78	SYSTEM							744			
9/78	SYSTEM							720			
10/78	SYSTEM							744			
11/78	SYSTEM							720			
12/78	SYSTEM							744			
1/79	SYSTEM							744			
2/79	SYSTEM							672			
3/79	SYSTEM							744			

** PROBLEMS/SOLUTIONS/COMMENTS

99.95% AVAILABILITY WAS REPORTED FOR THE PERIOD FROM APRIL 1978 THROUGH MARCH 1979.

4/79	SYSTEM							720			
5/79	SYSTEM							744			
6/79	SYSTEM							720			
7/79	SYSTEM							744			
8/79	SYSTEM							744			
9/79	SYSTEM							720			
10/79	SYSTEM							744			
11/79	SYSTEM							720			
12/79	SYSTEM							744			
1/80	SYSTEM							744			
2/80	SYSTEM							696			
3/80	SYSTEM							744			

ELECTRIC POWER DEVELOPMENT: TAKEHARA 1 (CONT.)

PERIOD	MODULE	AVAILABILITY	OPERABILITY	RELIABILITY	UTILIZATION	% REMOVAL SO2	% REMOVAL PART.	PER HOURS	BOILER HOURS	FGD HOURS	CAP. FACTOR
		PERFORMANCE DATA									
** PROBLEMS/SOLUTIONS/COMMENTS											
NO INFORMATION WAS AVAILABLE FOR THE APRIL 1979 THROUGH MARCH 1980 PERIOD.											
4/80	SYSTEM	100.0	100.0	100.0	100.0			720	720	720	
5/80	SYSTEM	100.0	100.0	100.0	100.0			744	744	744	
6/80	SYSTEM	87.9	100.0	100.0	87.9	90.10		720	633	633	82.4
** PROBLEMS/SOLUTIONS/COMMENTS											
THE FGD SYSTEM WAS OUT OF SERVICE FOR APPROXIMATELY 3 DAYS IN JUNE TO REMOVE THE SCALE ACCUMULATION IN THE FGD OUTLET DUCT.											
7/80	SYSTEM	100.0	100.0	100.0	100.0	91.00		744	744	744	95.5
8/80	SYSTEM	100.0	100.0	100.0	100.0	91.70		744	744	744	95.3
9/80	SYSTEM	100.0	100.0	100.0	100.0	93.10		720	720	720	95.3
** PROBLEMS/SOLUTIONS/COMMENTS											
NO PROBLEMS WERE ENCOUNTERED DURING THE THIRD QUARTER 1980.											
10/80	SYSTEM	100.0	100.0	100.0	100.0	93.40		744	744	744	94.5
11/80	SYSTEM	100.0	100.0	100.0	100.0	93.70		720	720	720	95.2
12/80	SYSTEM	100.0	100.0	100.0	27.7	91.70		744	206	206	22.4
** PROBLEMS/SOLUTIONS/COMMENTS											
THE BOILER WAS OUT OF SERVICE FROM DECEMBER 1 THROUGH DECEMBER 25 FOR SCHEDULED MAINTENANCE.											
1/81	SYSTEM							744			
2/81	SYSTEM							672			
3/81	SYSTEM							744			
** PROBLEMS/SOLUTIONS/COMMENTS											
THE FIRST QUARTER 1981 DATA IS NOT AVAILABLE AT THIS TIME; HOWEVER THE DATA WILL BE AVAILABLE IN THE SECOND QUARTER 1981 REPORT.											

SECTION 15
DESIGN AND PERFORMANCE DATA FOR OPERATIONAL FOREIGN FGD SYSTEMS

COMPANY NAME	HOKKAIDO ELECTRIC POWER	
PLANT NAME	TOMATOATSUMA THERMAL POW	
UNIT NUMBER	1	
CITY	TOMAKOMAI	
COUNTRY	JAPAN	
REGULATORY CLASSIFICATION	******	
PARTICULATE EMISSION LIMITATION - NG/J	******	(****** LB/MMBTU)
SO2 EMISSION LIMITATION - NG/J	******	(****** LB/MMBTU)
NOX EMISSION LIMITATION - NG/J	******	(****** LB/MMBTU)
NET PLANT GENERATING CAPACITY - MW	350	
GROSS UNIT GENERATING CAPACITY - MW	350	
NET UNIT GENERATING CAPACITY W/FGD - MW	175	
NET UNIT GENERATING CAPACITY WO/FGD - MW	175	
EQUIVALENT SCRUBBED CAPACITY - MW	350	
** UNIT DATA - BOILER AND STACK		
BOILER SUPPLIER	BABCOCK-HITACHI	
BOILER TYPE	PULVERIZED COAL	
BOILER SERVICE LOAD	BASE	
DESIGN BOILER FLUE GAS FLOW - CU.M/S	508.21	(1076939 ACFM)
BOILER FLUE GAS TEMPERATURE - C	121.1	(250 F)
STACK HEIGHT - M	170.	(558 FT)
STACK SHELL	CARBON STEEL	
STACK TOP DIAMETER - M	4.5	(14.6 FT)
** FUEL DATA		
FUEL TYPE	COAL	
FUEL GRADE	BITUMINOUS	
AVERAGE HEAT CONTENT - J/G	******	(108000 BTU/LB)
RANGE HEAT CONTENT - BTU/LB		******
AVERAGE ASH CONTENT - %	20.50	
RANGE ASH CONTENT - %	******	
AVERAGE MOISTURE CONTENT - %	7.00	
RANGE MOISTURE CONTENT - %	******	
AVERAGE SULFUR CONTENT - %	.30	
RANGE SULFUR CONTENT - %	******	
AVERAGE CHLORIDE CONTENT - %	********	
RANGE CHLORIDE CONTENT - %	******	
*** PARTICLE CONTROL		
** ESP		
NUMBER	4	
TYPE	HOT SIDE	
SUPPLIER	HITACHI	
INLET FLUE GAS CAPACITY - CU.M/S	828.8	(1756252 ACFM)
INLET FLUE GAS TEMPERATURE - C	363.9	(687 F)
PRESSURE DROP - KPA	.2	(1. IN-H2O)
PARTICLE REMOVAL EFFICENCY - %	99.8	
** PARTICLE SCRUBBER		
NUMBER	1	
GENERIC TYPE	VENTURI TOWER	
SPECIFIC TYPE	NR	
TRADE NAME/COMMON NAME	NR	
SUPPLIER	BABCOCK-HITACHI	
GAS CONTACTING DEVICE TYPE	NONE	
INLET GAS FLOW RATE - CU.M/S	198.7	(421036 ACFM)
INLET GAS TEMPERATURE - C	47.2	(117 F)
*** FGD SYSTEM		
** GENERAL DATA		
SALEABLE PRODUCT/THROWAWAY PRODUCT	SALEABLE PRODUCT	
SO2 REMOVAL MODE	WET SCRUBBING	
PROCESS TYPE	LIMESTONE	
SYSTEM SUPPLIER	BABCOCK-HITACHI	
DEVELOPMENT LEVEL	FULL SCALE	
NEW/RETROFIT	RETROFIT	

HOKKAIDO ELECTRIC POWER: TOMATOATSUMA THERMAL POW 1 (CONT.)

UNIT DESIGN SO2 REMOVAL EFFICIENCY - %	90.00
ENERGY CONSUMPTION - %	.0
CURRENT STATUS	1
COMMERCIAL START-UP	10/80
INITIAL START-UP	7/80

** DESIGN AND OPERATING PARAMETERS

** QUENCHER/PRESATURATOR

CONSTRUCTION MATERIAL GENERIC TYPE	NR
CONSTRUCTION MATERIAL SPECIFIC TYPE	NR

** ABSORBER

NUMBER	1	
GENERIC TYPE	NR	
SPECIFIC TYPE	NR	
TRADE NAME/COMMON TYPE	NR	
SUPPLIER	BABCOCK-HITACHI	
SHELL GENERIC MATERIAL	NR	
SHELL SPECIFIC MATERIAL	NR	
SHELL MATERIAL TRADE NAME/COMMON TYPE	NR	
LINER GENERIC MATERIAL	NR	
LINER SPECIFIC MATERIAL	NR	
LINER MATERIAL TRADE NAME/COMMON TYPE	NR	
INLET GAS FLOW - CU. M/S	198.69	(421036 ACFM)
INLET GAS TEMPERATURE - C	47.2	(117 F)
PARTICLE REMOVAL EFFICENCY - %	90.0	

** MIST ELIMINATOR

PRE-MIST ELIMINATOR/MIST ELIMINATOR	PRIMARY COLLECTOR
NUMBER PER SYSTEM	1
GENERIC TYPE	IMPINGEMENT
SPECIFIC TYPE	BAFFLE
TRADE NAME/COMMON TYPE	NR
CONFIGURATION	VERTICAL
CONSTRUCTION MATERIAL GENERIC TYPE	NR
CONSTRUCTION MATERIAL SPECIFIC TYPE	NR

** REHEATER

NUMBER	1	
GENERIC TYPE	WASTE HEAT RECOVERY	
SPECIFIC TYPE	GAS-GAS	
TRADE NAME/COMMON TYPE	WHEEL TYPE	
PERCENT GAS BYPASSED - AVG	14.3	
TEMPERATURE INCREASE - C	65.6	(118 F)
INLET FLUE GAS FLOW RATE - CU. M/S	199.17	(422057 ACFM)
CONSTRUCTION MATERIAL GENERIC TYPE	NR	
CONSTRUCTION MATERIAL SPECIFIC TYPE	NR	

** FANS

NUMBER	1	
DESIGN	CENTRIFUGAL	
SUPPLIER	HITACHI,LDT.	
FUNCTION	BOOSTER	
FLUE GAS FLOW RATE - CU.M/S	254.47	(539247 ACFM)
FLUE GAS TEMPERATURE - C	137.2	(279 F)

** DAMPERS

FUNCTION	NR
GENERIC TYPE	NR
SPECIFIC TYPE	NR
CONSTRUCTION MATERIAL GENERIC TYPE	NR
CONSTRUCTION MATERIAL SPECIFIC TYPE	NR
LINER GENERIC MATERIAL TYPE	NR
LINER SPECIFIC MATERIAL TYPE	NR

** REAGENT PREPARATION EQUIPMENT

FUNCTION	WET BALL MILL
DEVICE	NR
DEVICE TYPE	NR
NUMBER	1

HOKKAIDO ELECTRIC POWER: TOMATOATSUMA THERMAL POW 1 (CONT.)

PRODUCT QUALITY - % SOLIDS 92.0

** SOLIDS CONCENTRATING/DEWATERING
DEVICE THICKENER
NUMBER 2

** SOLIDS CONCENTRATING/DEWATERING
DEVICE CENTRIFUGE
NUMBER 3
NUMBER OF SPARES 1

*** SALEABLE BYPRODUCTS
NATURE GYPSUM
QUALITY - % 45.0
DISPOSITION MARKETED

*** SLUDGE

** TREATMENT
METHOD NR
DEVICE NR
PROPRIETARY PROCESS NR

** DISPOSAL
NATURE NR
TYPE NR
SITE TREATMENT NR

** WATER BALANCE
WATER LOOP TYPE CLOSED
MAKEUP WATER ADDITION - LITERS/S 4.0 (63 GPM)

PERFORMANCE DATA

PERIOD	MODULE	AVAILABILITY	OPERABILITY	RELIABILITY	UTILIZATION	% REMOVAL SO2	% REMOVAL PART.	PER HOURS	BOILER HOURS	FGD HOURS	CAP. FACTOR
10/80	SYSTEM	100.0	100.0	100.0	70.3	94.40		744	523	523	46.0

** PROBLEMS/SOLUTIONS/COMMENTS

OPERATIONS AT THE TOMATOATSUMA STATION COMMENCED IN OCTOBER 1980.

11/80	SYSTEM	100.0	100.0	100.0	85.1	92.40		720	613	613	61.1
12/80	SYSTEM	100.0	100.0	100.0	100.0	94.10		744	744	744	94.7

** PROBLEMS/SOLUTIONS/COMMENTS

DURING DECEMBER SCALE FORMATION WAS OBSERVED IN THE PIPING AND IN A PUMP OF THE WASTE WATER TREATMENT FACILITY. A WATER WASH LINE WAS INSTALLED FOR THE PIPING AND A PUMP WAS ADDED TO ELIMINATE SCALE. THE FGD SYSTEM OPERATION WAS NOT AFFECTED DURING THIS TIME.

SECTION 16
DESIGN AND PERFORMANCE DATA FOR DISCONTINUED DOMESTIC FGD SYSTEMS

COMPANY NAME	ARIZONA PUBLIC SERVICE	
PLANT NAME	FOUR CORNERS	
UNIT NUMBER	5A	
CITY	FARMINGTON	
STATE	NEW MEXICO	
REGULATORY CLASSIFICATION	D	
PARTICULATE EMISSION LIMITATION - NG/J	21.	(.050 LB/MMBTU)
SO2 EMISSION LIMITATION - NG/J	258.	(.600 LB/MMBTU)
NOX EMISSION LIMITATION - NG/J	******	(****** LB/MMBTU)
NET PLANT GENERATING CAPACITY - MW	2089	
GROSS UNIT GENERATING CAPACITY - MW	755	
NET UNIT GENERATING CAPACITY W/FGD - MW	*****	
NET UNIT GENERATING CAPACITY WO/FGD - MW	*****	
EQUIVALENT SCRUBBED CAPACITY - MW	755	
** UNIT DATA - BOILER AND STACK		
BOILER SUPPLIER	******	
BOILER TYPE	PULVERIZED COAL	
BOILER SERVICE LOAD	BASE	
DESIGN BOILER FLUE GAS FLOW - CU.M/S	********	(******* ACFM)
BOILER FLUE GAS TEMPERATURE - C	*******	(**** F)
STACK HEIGHT - M	******	(**** FT)
STACK SHELL	******	
STACK TOP DIAMETER - M	*******	(***** FT)
** FUEL DATA		
FUEL TYPE	COAL	
FUEL GRADE	SUBBITUMINOUS	
AVERAGE HEAT CONTENT - J/G	22562.	(9700 BTU/LB)
RANGE HEAT CONTENT - BTU/LB		******
AVERAGE ASH CONTENT - %	24.00	
RANGE ASH CONTENT - %	******	
AVERAGE MOISTURE CONTENT - %	11.00	
RANGE MOISTURE CONTENT - %	******	
AVERAGE SULFUR CONTENT - %	.81	
RANGE SULFUR CONTENT - %	******	
AVERAGE CHLORIDE CONTENT - %	********	
RANGE CHLORIDE CONTENT - %	******	
*** PARTICLE CONTROL		
** MECHANICAL COLLECTOR		
NUMBER	0	
TYPE	NONE	
** ESP		
** PARTICLE SCRUBBER		
GENERIC TYPE	NONE	
SPECIFIC TYPE	N/A	
TRADE NAME/COMMON NAME	N/A	
GAS CONTACTING DEVICE TYPE	N/A	
*** FGD SYSTEM		
** GENERAL DATA		
SALEABLE PRODUCT/THROWAWAY PRODUCT	THROWAWAY PRODUCT	
SO2 REMOVAL MODE	WET SCRUBBING	
PROCESS TYPE	LIME	
SYSTEM SUPPLIER	SOUTHERN CALIFORNIA EDISON	
A-E FIRM	BECHTEL	
DEVELOPMENT LEVEL	EXPERIMENTAL	
NEW/RETROFIT	RETROFIT	
ENERGY CONSUMPTION - %	.0	
CURRENT STATUS	8	
TERMINATION	12/76	
INITIAL START-UP	2/76	

ARIZONA PUBLIC SERVICE: FOUR CORNERS 5A (CONT.)

** DESIGN AND OPERATING PARAMETERS

** QUENCHER/PPESATURATOR

CONSTRUCTION MATERIAL GENERIC TYPE	NR
CONSTRUCTION MATERIAL SPECIFIC TYPE	NR

** ABSORBER

GENERIC TYPE	SPRAY TOWER
SPECIFIC TYPE	OPEN CROSSCURRENT SPRAY
TRADE NAME/COMMON TYPE	HORIZONTAL SPRAY CHAMBER
DIMENSIONS - FT	60.0 X 28.0 X 17.0
SHELL GENERIC MATERIAL	CARBON STEEL
SHELL SPECIFIC MATERIAL	AISI 1110
SHELL MATERIAL TRADE NAME/COMMON TYPE	N/A
LINER GENERIC MATERIAL	ORGANIC
LINER SPECIFIC MATERIAL	NATURAL RUBBER, GLASS FLAKE-FILLED POLYESTER
LINER MATERIAL TRADE NAME/COMMON TYPE	BLACK NATURAL RUBBER, NR
GAS CONTACTING DEVICE TYPE	NONE
NUMBER OF CONTACTING ZONES	5

** MIST ELIMINATOR

PRE-MIST ELIMINATOR/MIST ELIMINATOR	PRIMARY COLLECTOR
NUMBER PER SYSTEM	1
GENERIC TYPE	IMPINGEMENT
SPECIFIC TYPE	BAFFLE
TRADE NAME/COMMON TYPE	CLOSED VANE
CONSTRUCTION MATERIAL GENERIC TYPE	STAINLESS STEEL, CARBON STEEL
CONSTRUCTION MATERIAL SPECIFIC TYPE	NR

** REHEATER

GENERIC TYPE	INDIRECT HOT AIR
SPECIFIC TYPE	EXTERNAL HEAT EXCHANGER
TRADE NAME/COMMON TYPE	STEAM TUBE BUNDLE
CONSTRUCTION MATERIAL GENERIC TYPE	NR
CONSTRUCTION MATERIAL SPECIFIC TYPE	NR

** FANS

NUMBER	1
FUNCTION	BOOSTER
APPLICATION	FORCED DRAFT
CONSTRUCTION MATERIAL GENERIC TYPE	MANGANESE, VANADRUM STEEL

** DAMPERS

FUNCTION	NR
GENERIC TYPE	NR
SPECIFIC TYPE	NR
CONSTRUCTION MATERIAL GENERIC TYPE	NR
CONSTRUCTION MATERIAL SPECIFIC TYPE	NR
LINER GENERIC MATERIAL TYPE	NR
LINER SPECIFIC MATERIAL TYPE	NR

** DUCTWORK

SHELL GENERIC MATERIAL TYPE	NR
SHELL SPECIFIC MATERIAL TYPE	NR
LINER GENERIC MATERIAL TYPE	NR
LINER SPECIFIC MATERIAL TYPE	NR

** REAGENT PREPARATION EQUIPMENT

FUNCTION	SLAKER
DEVICE	DETENTION
DEVICE TYPE	N/A
NUMBER	1

** PUMPS

SERVICE	NUMBER
---	---
SLURRY RECIRCULATION	12

Reproduced from best available copy

** SOLIDS CONCENTRATING/DEWATERING

DEVICE	THICKENER
NUMBER	1
DIMENSIONS - FT	60.0 DIA
SHELL GENERIC MATERIAL TYPE	CARBON STEEL
OUTLET STREAM CHARACTERISTICS	30% SOLIDS

*** SLUDGE

** TREATMENT

METHOD	NR
DEVICE	NR
PROPRIETARY PROCESS	NR

** DISPOSAL

NATURE	NR
TYPE	NR
SITE TREATMENT	NR

PERFORMANCE DATA

PERIOD	MODULE	AVAILABILITY	OPERABILITY	RELIABILITY	UTILIZATION	% REMOVAL SO2	% REMOVAL PART.	PER HOURS	BOILER HOURS	FGD HOURS	CAP. FACTOR
2/76	SYSTEM							692			

** PROBLEMS/SOLUTIONS/COMMENTS

UNIT NO. 5 WAS FIRST PLACED IN COMMERCIAL OPERATION IN JULY 1970. THE FGD SYSTEM WHICH WAS RETROFITTED ON UNIT NO. 5 WAS A WEIR HORIZONTAL CROSSFLOW SPRAY ABSORBER WHICH WAS FORMERLY INSTALLED AND OPERATED IN A TEST PROGRAM AT THE MOHAVE GENERATING STATION OF THE SOUTHERN CALIFORNIA EDISON COMPANY. THE HORIZONTAL MODULE WAS A FOUR-STAGE SCRUBBING CHAMBER. EACH STAGE CONTAINED A ROW OF 36 EXTERNALLY MOUNTED NOZZLES. THE SLURRY WAS CYCLED THROUGH THE SCRUBBER IN A COUNTERCURRENT MANNER AT A RATE OF 36,000 GPM/STAGE. THE FRESH LIME SLURRY WAS SPRAYED ACROSS THE FLUE GAS AT THE FOURTH STAGE, WHICH WAS THE DISCHARGE END OF THE SCRUBBING CHAMBER. THE SCRUBBING SOLUTION WAS THEN COLLECTED AND RECYCLED SUCCESSIVELY TO THE THIRD, SECOND, AND FIRST STAGES OF THE SCRUBBING MODULE. THIS ALLOWED COMPLETE DEPLETION OF ANY CONCENTRATION. THE CLEANED GASES THEN PASSED THROUGH A MIST ELIMINATOR AND WERE REHEATED BEFORE BEING DISCHARGED TO THE STACK. THE SPENT SLURRY WAS DISCHARGED FROM THE SCRUBBING SYSTEM TO A THICKENER AND THE UNDERFLOW WAS PUMPED TO AN ON-SITE SETTLING POND. WATER WAS RETURNED TO THE PROCESS FOR FURTHER USE.

INSTALLATION OF THE MODULE AT THE FOUR CORNERS GENERATING STATION WAS COMPLETED AND THE SYSTEM WAS PLACED IN SERVICE ON FEBRUARY 17, 1976, FOR INITIAL OPERATION.

3/76	SYSTEM							744			
4/76	SYSTEM							720			

** PROBLEMS/SOLUTIONS/COMMENTS

THE FGD SYSTEM WAS TAKEN OFF LINE IN MID-APRIL FOR A SCHEDULED BOILER OVERHAUL. THE SYSTEM WAS SCHEDULED TO COME BACK ON LINE IN JULY 1976.

5/76	SYSTEM							744			
6/76	SYSTEM							720			
7/76	SYSTEM							744			
8/76	SYSTEM							744			
9/76	SYSTEM							720			

ARIZONA PUBLIC SERVICE: FOUR CORNERS 5A (CONT.)

PERIOD	MODULE	AVAILABILITY	OPERABILITY	RELIABILITY	UTILIZATION	% REMOVAL SO2	% REMOVAL PART.	PER HOURS	BOILER HOURS	FGD HOURS	CAP. FACTOR
					PERFORMANCE DATA						

** PROBLEMS/SOLUTIONS/COMMENTS

THE SYSTEM REMAINED OUT OF SERVICE THROUGH MID-APRIL 1976 DUE TO AN EXTENSIVE OVERHAUL OF THE NO. 5 BOILER PLUS THE DEVELOPMENT OF PROBLEMS WITH THE SCRUBBER MODULE'S REHEATER.

10/76	SYSTEM							744			
11/76	SYSTEM							720			
12/76	SYSTEM							744			

** PROBLEMS/SOLUTIONS/COMMENTS

THE PROTOTYPE WAS IN SERVICE THROUGHOUT THE MONTH OF NOVEMBER. ON DECEMBER 6 THE TEST PROGRAM WAS CONCLUDED AND THE UNIT WAS DISMANTLED.

SECTION 16
DESIGN AND PERFORMANCE DATA FOR DISCONTINUED DOMESTIC FGD SYSTEMS

COMPANY NAME	BOSTON EDISON	
PLANT NAME	MYSTIC	
UNIT NUMBER	6	
CITY	EVERETT	
STATE	MASSACHUSETTS	
REGULATORY CLASSIFICATION	******	
PARTICULATE EMISSION LIMITATION - NG/J	******	(****** LB/MMBTU)
SO2 EMISSION LIMITATION - NG/J	******	(****** LB/MM3TU)
NOX EMISSION LIMITATION - NG/J	******	(****** LB/MMBTU)
NET PLANT GENERATING CAPACITY - MW	*****	
GROSS UNIT GENERATING CAPACITY - MW	150	
NET UNIT GENERATING CAPACITY W/FGD - MW	*****	
NET UNIT GENERATING CAPACITY WO/FGD - MW	*****	
EQUIVALENT SCRUBBED CAPACITY - MW	150	

** UNIT DATA - BOILER AND STACK

BOILER SUPPLIER	COMBUSTION ENGINEERING	
BOILER TYPE	OIL FIRED	
BOILER SERVICE LOAD	******	
DESIGN BOILER FLUE GAS FLOW - CU.M/S	273.70	(580000 ACFM)
BOILER FLUE GAS TEMPERATURE - C	148.9	(300 F)
STACK HEIGHT - M	99.	(325 FT)
STACK SHELL	******	
STACK TOP DIAMETER - M	*******	(***** FT)

** FUEL DATA

FUEL TYPE	OIL	
FUEL GRADE	NO. 6	
AVERAGE HEAT CONTENT - J/G	******	(****** BTU/LB)
RANGE HEAT CONTENT - BTU/LB		******
AVERAGE ASH CONTENT - %	.07	
RANGE ASH CONTENT - %	******	
AVERAGE MOISTURE CONTENT - %	1.00	
RANGE MOISTURE CONTENT - %	******	
AVERAGE SULFUR CONTENT - %	2.00	
RANGE SULFUR CONTENT - %	******	
AVERAGE CHLORIDE CONTENT - %	********	
RANGE CHLORIDE CONTENT - %	******	

*** PARTICLE CONTROL

** MECHANICAL COLLECTOR

NUMBER	0
TYPE	NONE

** FABRIC FILTER

NUMBER	0
TYPE	NONE

** ESP

** PARTICLE SCRUBBER

GENERIC TYPE	NONE
SPECIFIC TYPE	N/A
TRADE NAME/COMMON NAME	N/A
GAS CONTACTING DEVICE TYPE	N/A

*** FGD SYSTEM

** GENERAL DATA

SALEABLE PRODUCT/THROWAWAY PRODUCT	SALEABLE PRODUCT
SO2 REMOVAL MODE	WET SCRUBBING
PROCESS TYPE	MAGNESIUM OXIDE
SYSTEM SUPPLIER	GE ENVIRONMENTAL SERVICES
DEVELOPMENT LEVEL	DEMONSTRATION
NEW/RETROFIT	RETROFIT
UNIT DESIGN PARTICLE REMOVAL EFFICIENCY - %	55.00
UNIT DESIGN SO2 REMOVAL EFFICIENCY - %	90.00

WARNING **UNNORMALIZED NUMBER(S) BEING EDITED FOR OUTPUT**

ENERGY CONSUMPTION - % .0

BOSTON EDISON: MYSTIC 6 (CONT.)

CURRENT STATUS	8
TERMINATION	7/74
COMMERCIAL START-UP	4/72
INITIAL START-UP	4/72

** DESIGN AND OPERATING PARAMETERS

** QUENCHER/PRESATURATOR

CONSTRUCTION MATERIAL GENERIC TYPE	NR
CONSTRUCTION MATERIAL SPECIFIC TYPE	NR

** ABSOPBER

NUMBER	1	
GENERIC TYPE	VENTURI TOWER	
SPECIFIC TYPE	VARIABLE-THROAT/TOP-ENTRY PLUMB BOB	
TRADE NAME/COMMON TYPE	N/A	
SHELL GENERIC MATERIAL	CARBON STEEL	
SHELL SPECIFIC MATERIAL	NR	
SHELL MATERIAL TRADE NAME/COMMON TYPE	N/A	
LINER GENEPIC MATERIAL	ORGANIC	
LINER SPECIFIC MATERIAL	EPOXY	
LINER MATERIAL TRADE NAME/COMMON TYPE	NR	
GAS CONTACTING DEVICE TYPE	N/A	
NUMBER OF CONTACTING ZONES	1	
LIQUID RECIRCULATION RATE - LITER/S	945.	(15000 GPM)
L/G RATIO - L/CU.M	4.4	(33.0 GAL/1000 ACF)
INLET GAS FLOW - CU. M/S	200.56	(425000 ACFM)
INLET GAS TEMPERATURE - C	148.9	(300 F)

** MIST ELIMINATOR

PRE-MIST ELIMINATOR/MIST ELIMINATOR	PRIMARY COLLECTOR
NUMBER PER SYSTEM	1
GENERIC TYPE	IMPINGEMENT
SPECIFIC TYPE	BAFFLE
TRADE NAME/COMMON TYPE	CLOSED VANE
NUMBER OF PASSES PER STAGE	6
CONSTRUCTION MATERIAL GENERIC TYPE	NR
CONSTRUCTION MATERIAL SPECIFIC TYPE	NR
WASH WATER SOURCE	FRESH

** REHEATER

NUMBER	0
GENERIC TYPE	NONE
SPECIFIC TYPE	N/A
TRADE NAME/COMMON TYPE	N/A
CONSTRUCTION MATERIAL GENERIC TYPE	NONE
CONSTRUCTION MATERIAL SPECIFIC TYPE	N/A

** FANS

NUMBER	2
APPLICATION	INDUCED DRAFT

** DAMPEPS

FUNCTION	NR
GENERIC TYPE	NR
SPECIFIC TYPE	NR
CONSTRUCTION MATERIAL GENERIC TYPE	NR
CONSTRUCTION MATERIAL SPECIFIC TYPE	NR
LINER GENERIC MATERIAL TYPE	NR
LINER SPECIFIC MATERIAL TYPE	NR

** DUCTWORK

SHELL GENERIC MATERIAL TYPE	NR
SHELL SPECIFIC MATERIAL TYPE	NR
LINER GENERIC MATERIAL TYPE	NR
LINER SPECIFIC MATERIAL TYPE	NR

** REAGENT PREPARATION EQUIPMENT

FUNCTION	SLAKER
DEVICE	NR
DEVICE TYPE	NR

** SOLIDS CONCENTRATING/DEWATERING

DEVICE	CENTRIFUGE
NUMBER	1
SHELL GENERIC MATERIAL TYPE	CARBON STEEL
FEED STREAM CHARACTERISTICS	10% SOLIDS

*** SLUDGE

** TREATMENT

METHOD	NR
DEVICE	NR
PROPRIETARY PROCESS	NR

** DISPOSAL

NATURE	N/A
TYPE	NONE
SITE TREATMENT	NR

** PROCESS CONTROL AND INSTRUMENTATION

CHEMICAL PARAMETERS	PH, FLUE GAS INLET TEMP., SCRUBBER OUTLET TEMP.
CONTROL LEVELS	PH 6.8
MONITOR LOCATION	PH - BLEED LINE FROM ABSORBER TO CENTRIFUGE
PROCESS CONTROL MANNER	MANUAL
PROCESS CHEMISTRY MODE	FEEDBACK

** WATER BALANCE

WATER LOOP TYPE	CLOSED

PERFORMANCE DATA

PERIOD	MODULE	AVAILABILITY	OPERABILITY	RELIABILITY	UTILIZATION	% REMOVAL SO2	% REMOVAL PART.	PER HOURS	BOILER HOURS	FGD HOURS	CAP. FACTOR
4/72	SYSTEM										

** PROBLEMS/SOLUTIONS/COMMENTS

THIS EXPERIMENTAL MAGNESIUM OXIDE SCRUBBING UNIT WAS RETROFITTED ON A 155 MW, OIL FIRED BOILER. THE SULFUR DIOXIDE AND PARTICLE MATTER REMOVAL OCCURRED IN THE VENTURI SCRUBBER MODULE. THE SO2 WAS CAPTURED AND CONVERTED TO MAGNESIUM SULFITE IN THE VENTURI. THE PRODUCT SLURRY WAS THEN FILTERED AND DRIED. THE DRY MATERIAL CALCINED AT HIGH TEMPERATURES TO DRIVE OFF THE SO2 AND REGENERATE MAGNESIUM OXIDE. THE SO2 STREAM WAS PROCESSED IN A SULFURIC ACID PLANT TO PRODUCE SULFURIC ACID. THE UTILITY AND THE EPA PROVIDED THE MAJOR PORTION OF THE FUNDING FOR THIS REGENERABLE DEMONSTRATION PROJECT.

5/73	SYSTEM										

** PROBLEMS/SOLUTIONS/COMMENTS

FROM INITIAL STARTUP IN APRIL 1972 UNTIL MAY 1973 THE SCRUBBER OPERATED INTERMITTENTLY BECAUSE OF MECHANICAL DIFFICULTIES. THE MAJOR PROBLEM ENTAILING DESIGN AND OPERATION OF THE MAGNESIUM SULFITE CRYSTAL DRYER, APPARENTLY WAS RESOLVED BY REDESIGN AND FUEL CHANGE.

6/73	SYSTEM		67.9		55.8			720	592	402	
7/73	SYSTEM		61.0		47.2			744	575	351	

** PROBLEMS/SOLUTIONS/COMMENTS

DURING JUNE AND JULY THE LONGEST PERIOD OF CONTINUOUS OPERATION OCCURRED. THE SYSTEM OPERATED 7.5 DAYS.

8/73	SYSTEM				.0			744	0		

BOSTON EDISON: MYSTIC 6 (CONT.)

PERIOD	MODULE	AVAILABILITY	OPERABILITY	RELIABILITY	UTILIZATION	% REMOVAL SO2	% REMOVAL PART.	PER HOURS	BOILER HOURS	FGD HOURS	CAP. FACTOR
		PERFORMANCE DATA									
	** PROBLEMS/SOLUTIONS/COMMENTS										
		DURING AUGUST THE BOILER WAS TAKEN OFF-LINE FOR AN ANNUAL OVERHAUL.									
9/73	SYSTEM	38.1		33.8				720	637	243	
10/73	SYSTEM	60.1		50.7				744	627	377	
	** PROBLEMS/SOLUTIONS/COMMENTS										
		DURING SEPTEMBER AND OCTOBER HEAVY EROSION/CORROSION IN THE LIQUOR RECIRCULATION PUMPS AND CENTRIFUGE DECREASED THE AVAILABILITY OF THE FGD SYSTEM.									
11/73	SYSTEM	25.6		22.5				720	629	162	
12/73	SYSTEM	13.1		11.6				744	658	86	
1/74	SYSTEM	27.4		20.4				744	555	152	
2/74	SYSTEM	25.5		20.5				672	541	138	
	** PROBLEMS/SOLUTIONS/COMMENTS										
		IN JANUARY AND FEBRUARY FREQUENT SHUTDOWNS DUE TO BOILER-RELATED PROBLEMS LIMITED SYSTEM OPERATION.									
3/74	SYSTEM	86.5		47.4				744	408	353	
	** PROBLEMS/SOLUTIONS/COMMENTS										
		SINCE FEBRUARY 1974 THE AVAILABILITY OF THE BOILER HAS INCREASED.									
4/74	SYSTEM	80.5		65.4				720	585	471	
	** PROBLEMS/SOLUTIONS/COMMENTS										
		DURING APRIL, TWO 7-DAY CONTINUOUS OPERATION PERIODS OCCURRED.									
5/74	SYSTEM	57.4		37.6				744	488	280	
	** PROBLEMS/SOLUTIONS/COMMENTS										
		DURING MAY, A TWO WEEK OUTAGE OF THE ACID PLANT WAS THE CAUSE OF A LOW FGD SYSTEM OPERABILITY FIGURE.									
6/74	SYSTEM	51.5		40.0				720	559	288	
	** PROBLEMS/SOLUTIONS/COMMENTS										
		DURING JUNE 1974 THE DEMONSTRATION PROGRAM WAS COMPLETED AND THE FGD SYSTEM WAS SHUTDOWN. EPA FUNDING OF THE CALCINING PORTION OF THIS OPERATION EXPIRED. THERE WERE NO DEFINITE PLANS FOR RESTARTING THIS UNIT. MAJOR PROBLEM AREAS ENCOUNTERED DURING THE OPERATION OF THIS PROTOTYPE UNIT INCLUDED TRIHYDRATE INSTEAD OF HEXAHYDRATE SULFITE CRYSTAL FORMATION, DUST PROBLEMS IN THE DRYER, LACK OF STACK GAS REHEAT CAUSING CONDENSATION IN THE STACK, LOUVER DAMPER PROBLEMS, EROSION OF PUMPS, PIPING, AND CENTRIFUGE, AND MINOR ANCILLARY EQUIPMENT FAILURES.									

SECTION 16
DESIGN AND PERFORMANCE DATA FOR DISCONTINUED DOMESTIC FGD SYSTEMS

COMPANY NAME	COMMONWEALTH EDISON	
PLANT NAME	WILL COUNTY	
UNIT NUMBER	1A	
CITY	ROMEOVILLE	
STATE	ILLINOIS	
REGULATORY CLASSIFICATION	E	
PARTICULATE EMISSION LIMITATION - NG/J	86.	(.200 LB/MMBTU)
SO2 EMISSION LIMITATION - NG/J	774.	(1.800 LB/MMBTU)
NOX EMISSION LIMITATION - NG/J	******	(****** LB/MMBTU)
NET PLANT GENERATING CAPACITY - MW	1147	
GROSS UNIT GENERATING CAPACITY - MW	167	
NET UNIT GENERATING CAPACITY W/FGD - MW	137	
NET UNIT GENERATING CAPACITY WO/FGD - MW	144	
EQUIVALENT SCRUBBED CAPACITY - MW	167	
** UNIT DATA - BOILER AND STACK		
BOILER SUPPLIER	BABCOCK & WILCOX	
BOILER TYPE	CYCLONE	
BOILER SERVICE LOAD	CYCLING	
DESIGN BOILER FLUE GAS FLOW - CU.M/S	363.36	(770000 ACFM)
BOILER FLUE GAS TEMPERATURE - C	179.4	(355 F)
STACK HEIGHT - M	107.	(350 FT)
STACK SHELL	******	
STACK TOP DIAMETER - M	3.8	(12.4 FT)
** FUEL DATA		
FUEL TYPE	COAL	
FUEL GRADE	******	
AVERAGE HEAT CONTENT - J/G	22260.	(9570 BTU/LB)
RANGE HEAT CONTENT - BTU/LB		9100-10500
AVERAGE ASH CONTENT - %	7.40	
RANGE ASH CONTENT - %	3.0-16.0	
AVERAGE MOISTURE CONTENT - %	********	
RANGE MOISTURE CONTENT - %	******	
AVERAGE SULFUR CONTENT - %	1.50	
RANGE SULFUR CONTENT - %	0.3-4.5	
AVERAGE CHLORIDE CONTENT - %	********	
RANGE CHLORIDE CONTENT - %	******	
*** PARTICLE CONTROL		
** MECHANICAL COLLECTOR		
NUMBER	0	
TYPE	NONE	
** FABRIC FILTER		
NUMBER	0	
TYPE	NONE	
** ESP		
NUMBER	1	
TYPE	COLD SIDE	
SUPPLIER	WESTERN PREC. DIVISION, JOY	
INLET FLUE GAS TEMPERATURE - C	179.4	(355 F)
PARTICLE REMOVAL EFFICENCY - %	90.0	
** PARTICLE SCRUBBER		
NUMBER	2	
INITIAL START-UP DATE	4/72	
GENERIC TYPE	VENTURI TOWER	
SPECIFIC TYPE	VARIABLE-THROAT/SIDE-MOVABLE BLADES	
TRADE NAME/COMMON NAME	N/A	
SUPPLIER	BABCOCK & WILCOX	
DIMENSIONS - FT	8.0 X 26.0 X 16.0	
SHELL GENERIC MATERIAL	CARBON STEEL	
SHELL SPECIFIC MATERIAL	AISI 1110	
LINER GENERIC MATERIAL	ORGANIC,INORGANIC	
LINER SPECIFIC MATERIAL	VINYL ESTER, HYDRAULICALLY-BONDED CEMENT	
GAS CONTACTING DEVICE TYPE	NONE	

COMMONWEALTH EDISON: WILL COUNTY 1A (CONT.)

LIQUID RECIRCULATION RATE - LITER/S	365.4	(5800 GPM)
L/G RATIO - LITER/CU.M	2.4	(18.0 GAL/1000ACF)
PPESSURE DROP - KPA	2.2	(9.0 IN-H2O)
SUPERFICIAL GAS VELOCITY - M/S	36.6	(120.0 FT/S)
INLET GAS FLOW RATE - CU.M/S	181.7	(385000 ACFM)
INLET GAS TEMPERATURE - C	179.4	(355 F)
PARTICLE REMOVAL EFFICIENCY - %	98.0	

*** FGD SYSTEM

** GENERAL DATA

SALEABLE PRODUCT/THROWAWAY PRODUCT	THROWAWAY PRODUCT
SO2 REMOVAL MODE	WET SCRUBBING
PROCESS TYPE	LIMESTONE
SYSTEM SUPPLIER	BABCOCK & WILCOX
A-E FIRM	BECHTEL
DEVELOPMENT LEVEL	FULL SCALE
NEW/RETROFIT	RETROFIT
UNIT DESIGN PARTICLE REMOVAL EFFICIENCY - %	98.00
UNIT DESIGN SO2 REMOVAL EFFICIENCY - %	76.00
ENERGY CONSUMPTION - %	.0
CURRENT STATUS	8
TERMINATION	7/77
COMMERCIAL START-UP	2/73
INITIAL START-UP	2/72

** DESIGN AND OPERATING PARAMETERS

** QUENCHER/PRESATURATOR

CONSTRUCTION MATERIAL GENERIC TYPE	NR
CONSTRUCTION MATERIAL SPECIFIC TYPE	NR

** ABSORBER

NUMBER	2	
GENERIC TYPE	TRAY TOWER	
SPECIFIC TYPE	SIEVE TRAY	
TRADE NAME/COMMON TYPE	N/A	
SUPPLIER	BABCOCK & WILCOX	
DIMENSIONS - FT	16.0 X 24.0 X 60.0	
SHELL GENERIC MATERIAL	CARBON STEEL	
SHELL SPECIFIC MATERIAL	HIGH STRENGTH LOW ALLOY	
SHELL MATERIAL TRADE NAME/COMMON TYPE	COR-TEN	
LINER GENERIC MATERIAL	ORGANIC	
LINER SPECIFIC MATERIAL	NATURAL RUBBER	
LINER MATERIAL TPADE NAME/COMMON TYPE	BLACK NATUPAL RUBBER	
GAS CONTACTING DEVICE TYPE	PERFORATED TRAYS	
NUMBER OF CONTACTING ZONES	2	
LIQUID RECIRCULATION RATE - LITER/S	693.	(11000 GPM)
L/G RATIO - L/CU.M	4.7	(35.0 GAL/1000 ACF)
GAS-SIDE PRESSUPE DROP - KPA	2.5	(10.0 IN-H2O)
SUPERFICAL GAS VELOCITY - M/SEC	3.0	(10.0 FT/S)
INLET GAS FLOW - CU. M/S	181.68	(385000 ACFM)
INLET GAS TEMPEPATURE - C	179.4	(355 F)
PARTICLE REMOVAL EFFICENCY - %	76.0	

** MIST ELIMINATOR

PRE-MIST ELIMINATOR/MIST ELIMINATOR	PRIMARY COLLECTOR	
NUMBER PER SYSTEM	2	
GENERIC TYPE	IMPINGEMENT	
SPECIFIC TYPE	BAFFLE	
TPADE NAME/COMMON TYPE	CLOSED VANE	
CONFIGURATION	HORIZONTAL	
NUMBER OF STAGES	2	
NUMBER OF PASSES PER STAGE	3	
FREEBOARD DISTANCE - M	3.05	(10.0 FT)
DISTANCE BETWEEN VANES - CM	3.8	(1.50 IN)
VANE ANGLES - DEGREES	45	
PRESSURE DROP - KPA	.2	(1.0 IN-H2O)
CONSTRUCTION MATEPIAL GENERIC TYPE	ORGANIC	
CONSTRUCTION MATERIAL SPECIFIC TYPE	FIBER-REINFORCED POLYESTER	
WASH WATER SOURCE	BLENDED	

COMMONWEALTH EDISON: WILL COUNTY 1A (CONT.)

WASH FREQUENCY	UNDERSPRAY-CONTINUOUS; OVERSPRAY-INTERMITTENT	
WASH RATE - L/S	71.0	(1125 GAL/MIN)
** REHEATER		
NUMBER	2	
GENERIC TYPE	IN-LINE	
SPECIFIC TYPE	STEAM	
TRADE NAME/COMMON TYPE	NR	
TEMPERATURE INCREASE - C	28.9	(52 F)
INLET FLUE GAS FLOW RATE - CU. M/S	179.32	(380000 ACFM)
INLET FLUE GAS TEMPERATURE - C	53.3	(128 F)
CONSTRUCTION MATERIAL GENERIC TYPE	STAINLESS STEEL	
CONSTRUCTION MATERIAL SPECIFIC TYPE	AUSTENITIC	
** FANS		
NUMBER	2	
FUNCTION	BOOSTER	
APPLICATION	INDUCED DRAFT	
FLUE GAS TEMPERATURE - C	82.2	(180 F)
** DAMPERS		
FUNCTION	NR	
GENERIC TYPE	NR	
SPECIFIC TYPE	NR	
CONSTRUCTION MATERIAL GENERIC TYPE	NR	
CONSTRUCTION MATERIAL SPECIFIC TYPE	NR	
LINER GENERIC MATERIAL TYPE	NR	
LINER SPECIFIC MATERIAL TYPE	NR	
** DUCTWORK		
SHELL GENERIC MATERIAL TYPE	NR	
SHELL SPECIFIC MATERIAL TYPE	NR	
LINER GENERIC MATERIAL TYPE	NR	
LINER SPECIFIC MATERIAL TYPE	NR	
** REAGENT PREPARATION EQUIPMENT		
FUNCTION	WET BALL MILL	
DEVICE	COMPARTMENTED	
DEVICE TYPE	NR	
NUMBER	2	
FULL LOAD DRY FEED CAPACITY - M.TONS/HR	10.9	(12 TPH)
PRODUCT QUALITY - % SOLIDS	27.5	
** TANKS		
SERVICE	NUMBER	
---	---	
SCRUBBER RECYCLE	2	
** PUMPS		
SERVICE	NUMBER	
---	---	
VENTURI RECIRCULATION	6	
ABSORBER RECIRCULATION	8	
** SOLIDS CONCENTRATING/DEWATERING		
DEVICE	THICKENER	
NUMBER	1	
CONFIGURATION	CIRCULAR, SLOPED BOTTOM	
DIMENSIONS - FT	65.0 DIA X 15.0	
** SOLIDS CONCENTRATING/DEWATERING		
DEVICE	VACUUM FILTER	
NUMBER	1	
CAPACITY	90TON/DAY	

*** SLUDGE

COMMONWEALTH EDISON: WILL COUNTY 1A (CONT.)

** TREATMENT	
METHOD	FIXATION
DEVICE	PUG MILL
PROPRIETARY PROCESS	CHICAGO ADMIXTURES
** DISPOSAL	
NATURE	INTERIM
TYPE	POND
LOCATION	ON-SITE
SITE TREATMENT	CLAY LINING
** DISPOSAL	
NATURE	FINAL
TYPE	LANDFILL
LOCATION	OFF-SITE
SITE TRANSPORTATION METHOD	TRUCK
** PROCESS CONTROL AND INSTRUMENTATION	
CHEMICAL PARAMETERS	PRESSURE, LIMESTONE FEED, PH
PROCESS CONTROL MANNER	AUTOMATIC
** WATER BALANCE	
WATER LOOP TYPE	CLOSED

PERFORMANCE DATA

PERIOD	MODULE	AVAILABILITY	OPERABILITY	RELIABILITY	UTILIZATION	% REMOVAL SO2	% REMOVAL PART.	PER HOURS	BOILER HOURS	FGD HOURS	CAP. FACTOR
0/72	SYSTEM										

** PROBLEMS/SOLUTIONS/COMMENTS

REFER TO THE PERFORMANCE UPDATE INFORMATION FOR WILL COUNTY LOCATED IN SECTION 14 OF THIS REPORT.

SECTION 16
DESIGN AND PERFORMANCE DATA FOR DISCONTINUED DOMESTIC FGD SYSTEMS

COMPANY NAME	DAIRYLAND POWER	
PLANT NAME	ALMA	
UNIT NUMBER	5	
CITY	ALMA	
STATE	WISCONSIN	
REGULATORY CLASSIFICATION	******	
PARTICULATE EMISSION LIMITATION - NG/J	******	(****** LB/MMBTU)
SO2 EMISSION LIMITATION - NG/J	******	(****** LB/MMBTU)
NOX EMISSION LIMITATION - NG/J	******	(****** LB/MMBTU)
NET PLANT GENERATING CAPACITY - MW	210	
GROSS UNIT GENERATING CAPACITY - MW	80	
NET UNIT GENERATING CAPACITY W/FGD - MW	*****	
NET UNIT GENERATING CAPACITY WO/FGD - MW	*****	
EQUIVALENT SCRUBBED CAPACITY - MW	80	
** UNIT DATA - BOILER AND STACK		
BOILER SUPPLIER	******	
BOILER TYPE	******	
BOILER SERVICE LOAD	******	
DESIGN BOILER FLUE GAS FLOW - CU.M/S	********	(******* ACFM)
BOILER FLUE GAS TEMPERATURE - C	*******	(**** F)
STACK HEIGHT - M	******	(**** FT)
STACK SHELL	******	
STACK TOP DIAMETER - M	*******	(***** FT)
** FUEL DATA		
FUEL TYPE	COAL	
FUEL GRADE	******	
AVERAGE HEAT CONTENT - J/G	******	(****** BTU/LB)
RANGE HEAT CONTENT - BTU/LB		10500-11000
AVERAGE ASH CONTENT - %	********	
RANGE ASH CONTENT - %	12.0-20.0	
AVERAGE MOISTURE CONTENT - %	********	
RANGE MOISTURE CONTENT - %	3.0-3.5	
AVERAGE SULFUR CONTENT - %	********	
RANGE SULFUR CONTENT - %	******	
AVERAGE CHLORIDE CONTENT - %	********	
RANGE CHLORIDE CONTENT - %	******	

*** PARTICLE CONTROL

** ESP	
NUMBER	1
** PARTICLE SCRUBBER	
GENERIC TYPE	NONE
SPECIFIC TYPE	N/A
TRADE NAME/COMMON NAME	N/A
GAS CONTACTING DEVICE TYPE	N/A

*** FGD SYSTEM

** GENERAL DATA	
SALEABLE PRODUCT/THROWAWAY PRODUCT	THROWAWAY PRODUCT
SO2 REMOVAL MODE	WET SCRUBBING
PROCESS TYPE	LIME
SYSTEM SUPPLIER	FOSTER WHEELER
DEVELOPMENT LEVEL	EXPERIMENTAL
NEW/RETROFIT	RETROFIT
UNIT DESIGN SO2 REMOVAL EFFICIENCY - %	32.50

WARNING **UNNORMALIZED NUMBER(S) BEING EDITED FOR OUTPUT**

ENERGY CONSUMPTION - %	.0
CURRENT STATUS	8
TERMINATION	8/74
COMMERCIAL START-UP	6/71

** DESIGN AND OPERATING PARAMETERS

DAIRYLAND POWER: ALMA 5 (CONT.)

** QUENCHER/PRESATURATOR	
CONSTRUCTION MATERIAL GENERIC TYPE	NR
CONSTRUCTION MATERIAL SPECIFIC TYPE	NR
** ABSORBER	
GENERIC TYPE	NR
SPECIFIC TYPE	NR
TRADE NAME/COMMON TYPE	NR
SHELL GENERIC MATERIAL	NR
SHELL SPECIFIC MATERIAL	NR
SHELL MATERIAL TRADE NAME/COMMON TYPE	NR
LINER GENERIC MATERIAL	NR
LINER SPECIFIC MATERIAL	NR
LINER MATERIAL TRADE NAME/COMMON TYPE	NR
** MIST ELIMINATOR	
PRE-MIST ELIMINATOR/MIST ELIMINATOR	NR
GENERIC TYPE	NR
SPECIFIC TYPE	NR
TRADE NAME/COMMON TYPE	NR
CONSTRUCTION MATERIAL GENERIC TYPE	NR
CONSTRUCTION MATERIAL SPECIFIC TYPE	NR
** REHEATER	
GENERIC TYPE	NR
SPECIFIC TYPE	NR
TRADE NAME/COMMON TYPE	NR
CONSTRUCTION MATERIAL GENERIC TYPE	NR
CONSTRUCTION MATERIAL SPECIFIC TYPE	NR
** DAMPERS	
FUNCTION	NR
GENERIC TYPE	NR
SPECIFIC TYPE	NR
CONSTRUCTION MATERIAL GENERIC TYPE	NR
CONSTRUCTION MATERIAL SPECIFIC TYPE	NR
LINER GENERIC MATERIAL TYPE	NR
LINER SPECIFIC MATERIAL TYPE	NR
** DUCTWORK	
SHELL GENERIC MATERIAL TYPE	NR
SHELL SPECIFIC MATERIAL TYPE	NR
LINER GENERIC MATERIAL TYPE	NR
LINER SPECIFIC MATERIAL TYPE	NR
** REAGENT PREPARATION EQUIPMENT	
FUNCTION	SLAKER
DEVICE	NR
DEVICE TYPE	NR
** SOLIDS CONCENTRATING/DEWATERING	
DEVICE	NA
*** SLUDGE	
** TREATMENT	
METHOD	NA
DEVICE	NA
PROPRIETARY PROCESS	NA
** DISPOSAL	
NATURE	NR
TYPE	NR

DAIRYLAND POWER: ALMA 5 (CONT.)

PERIOD	MODULE	AVAILABILITY	OPERABILITY	RELIABILITY	UTILIZATION	% REMOVAL SO2	% REMOVAL PART.	PER HOURS	BOILER HOURS	FGD HOURS	CAP. FACTOR
6/71	SYSTEM										

** PROBLEMS/SOLUTIONS/COMMENTS

THIS EXPERIMENTAL WET LIME FURNACE SYSTEM COMMENCED OPERATIONS IN JUNE 1971 AND WAS OPERATIONAL FOR PERIODS UP TO 30 DAYS. IN AUGUST 1974 THE UNIT WAS TESTED FOR TWO DAYS USING WESTERN LOW-SULFUR COAL. THE TEST SHOWED ABOUT 50% SO2 REMOVAL EFFICIENCY, BUT ESP PERFORMANCE HAS ADVERSELY AFFECTED. THE FGD PROJECT HAS BEEN SHUT DOWN INDEFINITELY SINCE AUGUST 1974, AND THERE ARE NO PLANS FOR FUTURE OPERATION.

SECTION 16
DESIGN AND PERFORMANCE DATA FOR DISCONTINUED DOMESTIC FGD SYSTEMS

COMPANY NAME	DETROIT EDISON	
PLANT NAME	ST. CLAIR	
UNIT NUMBER	6A	
CITY	BELLE RIVER	
STATE	MICHIGAN	
REGULATORY CLASSIFICATION	C	
PARTICULATE EMISSION LIMITATION - NG/J	86.	(.200 LB/MMBTU)
SO2 EMISSION LIMITATION - NG/J	1376.	(3.200 LB/MMBTU)
NOX EMISSION LIMITATION - NG/J	******	(****** LB/MMBTU)
NET PLANT GENERATING CAPACITY - MW	1798	
GROSS UNIT GENERATING CAPACITY - MW	325	
NET UNIT GENERATING CAPACITY W/FGD - MW	154	
NET UNIT GENERATING CAPACITY WO/FGD - MW	163	
EQUIVALENT SCRUBBED CAPACITY - MW	163	
** UNIT DATA - BOILER AND STACK		
BOILER SUPPLIER	COMBUSTION ENGINEERING	
BOILER TYPE	******	
BOILER SERVICE LOAD	PEAK	
DESIGN BOILER FLUE GAS FLOW - CU.M/S	465.77	(987000 ACFM)
BOILER FLUE GAS TEMPERATURE - C	132.2	(270 F)
STACK HEIGHT - M	130.	(425 FT)
STACK SHELL	******	
STACK TOP DIAMETER - M	*******	(***** FT)
** FUEL DATA		
FUEL TYPE	COAL	
FUEL GRADE	SUBBITUMINOUS	
AVERAGE HEAT CONTENT - J/G	22330.	(9600 BTU/LB)
RANGE HEAT CONTENT - BTU/LB		9500-9600
AVERAGE ASH CONTENT - %	4.00	
RANGE ASH CONTENT - %	3.0-4.0	
AVERAGE MOISTURE CONTENT - %	22.60	
RANGE MOISTURE CONTENT - %	22.0-24.0	
AVERAGE SULFUR CONTENT - %	.35	
RANGE SULFUR CONTENT - %	0.3-0.4	
AVERAGE CHLORIDE CONTENT - %	********	
RANGE CHLORIDE CONTENT - %	******	
*** PARTICLE CONTROL		
** MECHANICAL COLLECTOR		
NUMBER	0	
TYPE	NONE	
** FABRIC FILTER		
NUMBER	0	
TYPE	NONE	
** ESP		
NUMBER	2	
SUPPLIER	WHEELABRATOR-FRYE	
PARTICLE REMOVAL EFFICENCY - %	90.0	
** PARTICLE SCRUBBER		
NUMBER	2	
INITIAL START-UP DATE	9/75	
GENERIC TYPE	VENTURI TOWER	
SPECIFIC TYPE	VARIABLE-THROAT/ADJUSTABLE DRUM	
TRADE NAME/COMMON NAME	RADIAL FLOW VENTURI	
SUPPLIER	PEABODY-LURGI	
SHELL GENERIC MATERIAL	STAINLESS STEEL	
SHELL SPECIFIC MATERIAL	AUSTENITIC	
LINER GENERIC MATERIAL	ORGANIC	
LINER SPECIFIC MATERIAL	RUBBER	
GAS CONTACTING DEVICE TYPE	NONE	
LIQUID RECIRCULATION RATE - LITER/S	278.5	(4420 GPM)
L/G RATIO - LITER/CU.M	2.7	(20.0 GAL/1000ACF)
PRESSURE DROP - KPA	3.5	(14.0 IN-H2O)

DETROIT EDISON: ST. CLAIR 6A (CONT.)

SUPERFICIAL GAS VELOCITY - M/S	28.3	(93.0 FT/S)
INLET GAS FLOW RATE - CU.M/S	116.6	(247000 ACFM)
INLET GAS TEMPERATURE - C	132.2	(270 F)

*** FGD SYSTEM

** GENEPAL DATA

SALEABLE PRODUCT/THROWAWAY PRODUCT	THROWAWAY PRODUCT
SO2 REMOVAL MODE	WET SCRUBBING
PROCESS TYPE	LIMESTONE
SYSTEM SUPPLIER	PEABODY PROCESS SYSTEMS
A-E FIRM	BECHTEL
DEVELOPMENT LEVEL	DEMONSTRATION
NEW/RETROFIT	RETROFIT
UNIT DESIGN PARTICLE REMOVAL EFFICIENCY - %	99.70
UNIT DESIGN SO2 REMOVAL EFFICIENCY - %	90.00

WARNING **UNNORMALIZED NUMBER(S) BEING EDITED FOR OUTPUT**

ENERGY CONSUMPTION - %	.0
CURRENT STATUS	8
TERMINATION	12/76
COMMERCIAL START-UP	9/75
INITIAL START-UP	6/75

** DESIGN AND OPERATING PARAMETERS

** QUENCHER/PRESATURATOR

CONSTRUCTION MATERIAL GENERIC TYPE	NR
CONSTRUCTION MATERIAL SPECIFIC TYPE	NR

** ABSORBER

NUMBER	2	
GENERIC TYPE	SPRAY TOWER	
SPECIFIC TYPE	OPEN COUNTERCURRENT SPRAY	
TRADE NAME/COMMON TYPE	N/A	
SUPPLIER	PEABODY PROCESS SYSTEMS	
SHELL GENERIC MATERIAL	STAINLESS STEEL	
SHELL SPECIFIC MATERIAL	AUSTENITIC	
SHELL MATERIAL TRADE NAME/COMMON TYPE	TYPE 316L	
LINER GENERIC MATERIAL	NONE	
LINER SPECIFIC MATERIAL	N/A	
LINER MATERIAL TRADE NAME/COMMON TYPE	N/A	
GAS CONTACTING DEVICE TYPE	NONE	
L/G RATIO - L/CU.M	10.7	(80.0 GAL/1000 ACF)
GAS-SIDE PRESSURE DROP - KPA	2.5	(10.0 IN-H2O)
SUPERFICAL GAS VELOCITY - M/SEC	2.9	(9.5 FT/S)
INLET GAS FLOW - CU. M/S	101.46	(215000 ACFM)
INLET GAS TEMPERATUPE - C	47.8	(118 F)
SO2 REMOVAL EFFICIENCY - %	90.0	

** MIST ELIMINATOR

PRE-MIST ELIMINATOR/MIST ELIMINATOR	PRIMARY COLLECTOR	
NUMBER PER SYSTEM	2	
GENERIC TYPE	CENTRIFUGAL	
SPECIFIC TYPE	RADIAL VANE	
TRADE NAME/COMMON TYPE	RADIAL BAFFLE	
CONFIGURATION	HORIZONTAL	
FREEBOAPD DISTANCE - M	1.37	(4.5 FT)
DISTANCE BETWEEN VANES - CM	20.3	(8.00 IN)
VANE ANGLES - DEGREES	45	
PRESSURE DROP - KPA	.0	(.2 IN-H2O)
SUPERFICAL GAS VELOCITY - M/S	3.0	(10.0 FT/S)
CONSTRUCTION MATERIAL GENERIC TYPE	STAINLESS STEEL	
CONSTRUCTION MATERIAL SPECIFIC TYPE	AUSTENITIC	

** REHEATER

NUMBER	1	
GENERIC TYPE	DIRECT COMBUSTION	
SPECIFIC TYPE	EXTERNAL COMBUSTION CHAMBER	
TPADE NAME/COMMON TYPE	OIL	
PERCENT GAS BYPASSED - AVG	.0	
TEMPERATURE INCREASE - C	27.8	(50 F)
INLET FLUE GAS FLOW RATE - CU. M/S	187.20	(396700 ACFM)

DETROIT EDISON: ST. CLAIR 6A (CONT.)

INLET FLUE GAS TEMPERATURE - C	50.0 (122 F)
CONSTRUCTION MATERIAL GENERIC TYPE	NR
CONSTRUCTION MATERIAL SPECIFIC TYPE	NR
** FANS	
NUMBER	1
SUPPLIER	PEABODY ENGINEERING
FUNCTION	BOOSTER
APPLICATION	INDUCED DRAFT
SERVICE	WET
CONSTRUCTION MATERIAL GENERIC TYPE	TYPE 316L STAINLESS STEEL
** DAMPERS	
FUNCTION	NR
GENERIC TYPE	NR
SPECIFIC TYPE	NR
CONSTRUCTION MATERIAL GENERIC TYPE	NR
CONSTRUCTION MATERIAL SPECIFIC TYPE	NR
LINER GENERIC MATERIAL TYPE	NR
LINER SPECIFIC MATERIAL TYPE	NR
** DUCTWORK	
SHELL GENERIC MATERIAL TYPE	NR
SHELL SPECIFIC MATERIAL TYPE	NR
LINER GENERIC MATERIAL TYPE	NR
LINER SPECIFIC MATERIAL TYPE	NR
** REAGENT PREPARATION EQUIPMENT	
FUNCTION	NONE
DEVICE	N/A
DEVICE TYPE	N/A
NUMBER	1
PRODUCT QUALITY - % SOLIDS	35.0
** PUMPS	
SERVICE	NUMBER
-------	------
VENTURI RECIRCULATION	3
SPRAY TOWER RECIRCULATION	6
** SOLIDS CONCENTRATING/DEWATERING	
DEVICE	NONE
NUMBER	0
*** SLUDGE	
** TREATMENT	
METHOD	BLEED
DEVICE	N/A
PROPRIETARY PROCESS	N/A
** DISPOSAL	
NATURE	FINAL
TYPE	POND
SITE TRANSPORTATION METHOD	PIPE LINE
SITE TREATMENT	NONE
SITE SERVICE LIFE - YRS	1
** PROCESS CONTROL AND INSTRUMENTATION	
CHEMICAL PARAMETERS	PH, SOLIDS
CONTROL LEVELS	PH 5.8-6.0; SOLIDS 15%
MONITOR LOCATION	RECYCLE TANK
PROCESS CONTROL MANNER	AUTOMATIC
PROCESS CHEMISTRY MODE	FEEDBACK
** WATER BALANCE	
WATER LOOP TYPE	OPEN

DETROIT EDISON: ST. CLAIR 6A (CONT.)

PERIOD	MODULE	AVAILABILITY	OPERABILITY	RELIABILITY	UTILIZATION	% REMOVAL SO2	% REMOVAL PART.	PER HOURS	BOILER HOURS	FGD HOURS	CAP. FACTOR
		PERFORMANCE DATA									
0/75	SYSTEM										

** PROBLEMS/SOLUTIONS/COMMENTS

REFER TO THE PERFORMANCE UPDATE INFORMATION FOR ST. CLAIR 6 LOCATED IN SECTION 14 OF THIS REPORT.

SECTION 16
DESIGN AND PERFORMANCE DATA FOR DISCONTINUED DOMESTIC FGD SYSTEMS

COMPANY NAME	GULF POWER	
PLANT NAME	SCHOLZ	
UNIT NUMBER	1	
CITY	SNEADS	
STATE	FLORIDA	
REGULATORY CLASSIFICATION	E	
PARTICULATE EMISSION LIMITATION - NG/J	******	(****** LB/MMBTU)
SO2 EMISSION LIMITATION - NG/J	******	(****** LB/MMBTU)
NOX EMISSION LIMITATION - NG/J	******	(****** LB/MMBTU)
NET PLANT GENERATING CAPACITY - MW	80	
GROSS UNIT GENERATING CAPACITY - MW	20	
NET UNIT GENERATING CAPACITY W/FGD - MW	*****	
NET UNIT GENERATING CAPACITY WO/FGD - MW	*****	
EQUIVALENT SCRUBBED CAPACITY - MW	20	

** UNIT DATA - BOILER AND STACK

BOILER SUPPLIER	BABCOCK & WILCOX	
BOILER TYPE	PULVERIZED COAL	
BOILER SERVICE LOAD	BASE	
DESIGN BOILER FLUE GAS FLOW - CU.M/S	50.02	(106000 ACFM)
BOILER FLUE GAS TEMPERATURE - C	*******	(**** F)
STACK HEIGHT - M	******	(**** FT)
STACK SHELL	******	
STACK TOP DIAMETER - M	*******	(***** FT)

** FUEL DATA

FUEL TYPE	COAL	
FUEL GRADE	******	
AVERAGE HEAT CONTENT - J/G	30005.	(12900 BTU/LB)
RANGE HEAT CONTENT - BTU/LB		******
AVERAGE ASH CONTENT - %	********	
RANGE ASH CONTENT - %	******	
AVERAGE MOISTURE CONTENT - %	********	
RANGE MOISTURE CONTENT - %	******	
AVERAGE SULFUR CONTENT - %	3.25	
RANGE SULFUR CONTENT - %	3.0-3.5	
AVERAGE CHLORIDE CONTENT - %	********	
RANGE CHLORIDE CONTENT - %	******	

*** PARTICLE CONTROL

** ESP

NUMBER	1

** PARTICLE SCRUBBER

GENERIC TYPE	NR
SPECIFIC TYPE	NR
TRADE NAME/COMMON NAME	NR

*** FGD SYSTEM

** GENERAL DATA

SALEABLE PRODUCT/THROWAWAY PRODUCT	THROWAWAY PRODUCT
SO2 REMOVAL MODE	WET SCRUBBING
PROCESS TYPE	DUAL ALKALI/LIMESTONE
SYSTEM SUPPLIER	THYSSEN/CEA
A-E FIRM	A.D. LITTLE
DEVELOPMENT LEVEL	DEMONSTRATION
NEW/RETROFIT	RETROFIT

WARNING **UNNORMALIZED NUMBER(S) BEING EDITED FOR OUTPUT**

ENERGY CONSUMPTION - %	.0
CURRENT STATUS	8
INITIAL START-UP	8/80

** DESIGN AND OPERATING PARAMETERS

** QUENCHER/PRESATURATOR

CONSTRUCTION MATERIAL GENERIC TYPE	NR
CONSTRUCTION MATERIAL SPECIFIC TYPE	NR

GULF POWER: SCHOLZ 1 (CONT.)

** ABSORBER	
GENERIC TYPE	TRAY TOWER
SPECIFIC TYPE	NR
TRADE NAME/COMMON TYPE	NR
SHELL GENERIC MATERIAL	NR
SHELL SPECIFIC MATERIAL	NR
SHELL MATERIAL TRADE NAME/COMMON TYPE	NR
LINER GENERIC MATERIAL	NR
LINER SPECIFIC MATERIAL	NR
LINER MATERIAL TRADE NAME/COMMON TYPE	NR
** MIST ELIMINATOR	
PRE-MIST ELIMINATOR/MIST ELIMINATOR	NR
GENERIC TYPE	NR
SPECIFIC TYPE	NR
TRADE NAME/COMMON TYPE	NR
CONSTRUCTION MATERIAL GENERIC TYPE	NR
CONSTRUCTION MATERIAL SPECIFIC TYPE	NR
** REHEATER	
GENERIC TYPE	INDIRECT HOT AIR
SPECIFIC TYPE	NR
TRADE NAME/COMMON TYPE	NR
TEMPERATURE INCREASE - C	22.2 (40 F)
CONSTRUCTION MATERIAL GENERIC TYPE	NR
CONSTRUCTION MATERIAL SPECIFIC TYPE	NR
** FANS	
DESIGN	CENTRIFUGAL
FUNCTION	BOOSTER
APPLICATION	INDUCED DRAFT
SERVICE	WET
** DAMPERS	
FUNCTION	NR
GENERIC TYPE	NR
SPECIFIC TYPE	NR
CONSTRUCTION MATERIAL GENERIC TYPE	NR
CONSTRUCTION MATERIAL SPECIFIC TYPE	NR
LINER GENERIC MATERIAL TYPE	NR
LINER SPECIFIC MATERIAL TYPE	NR
** DUCTWORK	
SHELL GENERIC MATERIAL TYPE	NR
SHELL SPECIFIC MATERIAL TYPE	NR
LINER GENERIC MATERIAL TYPE	NR
LINER SPECIFIC MATERIAL TYPE	NR
** REAGENT PREPARATION EQUIPMENT	
FUNCTION	NR
DEVICE	NR
DEVICE TYPE	NR
** SOLIDS CONCENTRATING/DEWATERING	
DEVICE	THICKENER
NUMBER	1
SHELL GENERIC MATERIAL TYPE	CARBON STEEL
SHELL SPECIFIC MATERIAL TYPE	FLAKE REINFORCED LINING
** SOLIDS CONCENTRATING/DEWATERING	
DEVICE	VACUUM FILTER
NUMBER	1
SHELL SPECIFIC MATERIAL TYPE	FIBERGLASS
FEED STREAM CHARACTERISTICS	20% SOLIDS

*** SLUDGE

GULF POWER: SCHOLZ 1 (CONT.)

** TREATMENT

METHOD	DEWATERED
DEVICE	N/A
PROPRIETARY PROCESS	N/A

** DISPOSAL

NATURE	FINAL
TYPE	POND
SITE TREATMENT	CLAY LINING

** WATER BALANCE

WATER LOOP TYPE	CLOSED

PERFORMANCE DATA

PERIOD	MODULE	AVAILABILITY	OPERABILITY	RELIABILITY	UTILIZATION	% REMOVAL SO2	% REMOVAL PART.	PER HOURS	BOILER HOURS	FGD HOURS	CAP. FACTOR
8/80	SYSTEM							744			

** PROBLEMS/SOLUTIONS/COMMENTS

INITIAL OPERATION OF THIS DEMONSTRATION LIMESTONE DUAL ALKALI SYSTEM BEGAN ON AUGUST 20. OPERATIONS DURING THE REST OF THE MONTH WERE INTERMITTENT AS MECHANICAL PROBLEMS WERE RECTIFIED.

9/80	SYSTEM							720			
10/80	SYSTEM							744			
11/80	SYSTEM							720			

** PROBLEMS/SOLUTIONS/COMMENTS

THE FGD SYSTEM CONTINUED TO OPERATE THROUGH NOVEMBER IN A DEBUGGING MODE OF OPERATION.

12/80	SYSTEM				75.9			744		565	

** PROBLEMS/SOLUTIONS/COMMENTS

DURING DECEMBER THE DEMONSTRATION FGD SYSTEM OPERATED CONTINUOUSLY FOR TWO EIGHT DAY PERIODS. DURING THIS TIME THE SYSTEM SO2 REMOVAL EFFICIENCY WAS FOUND TO BE GREATER THAN 90%.

THE FGD SYSTEM WAS FORCED TO REMAIN OFF LINE FOR 6-8 DAYS IN DECEMBER DUE TO AN UNAVAILABILITY OF RAW MATERIALS.

1/81	SYSTEM				43.4			744		323	

** PROBLEMS/SOLUTIONS/COMMENTS

AT THE END OF JANUARY THE SYSTEM WAS SHUT DOWN TO MAKE CORRECTIONS TO THE THICKENER. REPAIRS WERE CONDUCTED ON THE OVERFLOW WEIR AND RETURN LINES TO THE THICKENER CENTERWELL.

2/81	SYSTEM	86.2	86.2		86.2			672	672	579	

** PROBLEMS/SOLUTIONS/COMMENTS

THE SYSTEM WAS STARTED UP ON FEBRUARY 2 AT NOONTIME, AFTER CORRECTIONS WERE COMPLETED ON THE THICKENER. FAN MAINTENANCE REQUIRED A BRIEF 10 MINUTE SHUT DOWN LATER ON THAT DAY. AFTER TWO DAYS OF OPERATION, THE SYSTEM WAS SHUT DOWN ON FEBRUARY 4 FOR 11 HOURS. THIS WAS A PREVENTIVE MEASURE TO ALLOW SOLIDS IN THE THICKENER TO SETTLE (THICKENER OVERFLOW WAS CLOUDY). THE SYSTEM WAS RESTARTED ON FEBRUARY 5 AND OPERATED FOR 3 DAYS BEFORE IT WAS SHUT DOWN DUE TO THE INABILITY TO TRUCK AWAY SOLID WASTE MATERIAL. HEAVY RAINS WASHED OUT THE ROADS TO THE PONDS AND THE TRUCKS COULD NO LONG-

PERIOD	MODULE	AVAILABILITY	OPERABILITY	RELIABILITY	UTILIZATION	% REMOVAL SO2	% REMOVAL PART.	PER HOURS	BOILER HOURS	FGD HOURS	CAP. FACTOR

ER HAUL THE WASTE MATERIAL DISCHARGED BY THE VACUUM FILTER. IMPROVEMENT IN WEATHER CODITIONS AND THE SPREADING OF SOME ROCKS ON THE POND BANKS MADE IT POSSIBLE TO RESUME WASTE DISPOSAL; THE SYSTEM WAS RESTARTED ON FEBRUARY 10 AFTER 39 HOURS OF INTERRUPTION. IT OPERATED UNTIL THE END OF THE MONTH WITH ONE OUTAGE ON FEBRUARY 27 DUE TO A FAILURE IN THE SCRUBBER PUMPS. THE AVERAGE SO2 REMOVAL EFFICIENCY FOR THE MONTH WAS 95.7 PERCENT.

3/81	SYSTEM	58.2			46.5	744	346

** PROBLEMS/SOLUTIONS/COMMENTS

TWO SEPERATE OUTAGES OCCURRING ON MARCH 2 AND MARCH 3 TOTALING 7.8 HOURS WERE DUE TO PROBLEMS WITH THE SCRUBBER PUMPS. THE MOTOR IN ONE PUMP WAS INOPERATIVE AND THE IMPELLER IN THE OTHER PUMP HAD TO BE REPLACED.

A THIRD OUTAGE LASTING 190 HOURS WAS REQUIRED TO REPAIR THE VACUUM FILTER. THE PERFORMANCE OF THE VACUUM FILTER HAD BEEN DETERIORATING STEADILY. LEAKS HAD BEEN DETECTED IN THE INTERNAL PIPING OF THE FILTER DRUM AND BY THE TIME THE FILTER WAS REMOVED, ONLY HALF OF THE PANELS WERE ABLE TO PULL CAKE. THE SYSTEM WAS RESTARTED ON MARCH 13 AFTER THE FILTER HAD BEEN FIXED AND REINSTALLED. ALTHOUGH ALL 12 PANELS WERE PULLING CAKE, THE QUALITY OF THE SOLID CAKE PRODUCED BY THE FILTER DID NOT IMPROVE SIGNIFICANTLY (PERCENT SOLIDS CONCENTRATION WAS ABOUT 40 PERCENT). THE VACUUM REMAINED LOW, 5 TO 10 INCHES OF HG, VERSUS THE DESIGNED VACUUM OF 5 TO 10 INCHES HG.

THE SOLIDS LEFT IN THE THICKENER DETERIORATED AS FAR AS SETTLING CHARACTERISTICS ARE CONCERNED, WHILE THE FILTER WAS BEING REPAIRED. THESE SOLIDS SLOWLY RESUSPENDED DURING THE 8 DAY OUTAGE. WHEN THE SYSTEM WAS RESTARTED ON MARCH 13, THE RESUSPENSION OF SOLIDS WAS AUGMENTED BY THE CIRCULATION OF LIQUOR THROUGHOUT THE SYSTEM. THIS PROBLEM CAUSED 3 OUTAGES TOTALING 94 HOURS. A FLOCCULANT WAS USED TO HELP IN THE SETTLING OF THESE SOLIDS.

ON MARCH 23, THE RAKE LOCKED IN PLACE. ROTATION OF THE RAKE WAS STOPPED TO PREVENT RESUSPENSION OF SOLIDS WHILE GOOD SETTLING SOLIDS BEING GENERATED IN THE REACTORS WERE BEING USED TO FORM A BLANKET TO COVER THE POOR SETTLING SOLIDS. AN AIR-LIQUOR SPARGER WAS USED TO FREE THE RAKE. THE OUTAGE LASTED 23 HOURS. THE SYSTEM RESTARTED AND OPERATED UNTIL NOON, MARCH 28. TESTING OF THE SYSTEM CONCLUDED AT THAT TIME. THE AVERAGE SO2 REMOVAL EFFICIENCY DURING THE OPERATING TIME IN THE MONTH OF MARCH WAS 96.8 PERCENT.

THE DECISION CONCERNING THE FUTURE OF THE FGD SYSTEM IS LEFT UP TO THE SOUTHERN COMPANY WHICH CONSISTS OF FOUR POWER COMPANIES (GULF, ALABAMA, GEORGIA, AND MISSISSIPPI).

SECTION 16
DESIGN AND PERFORMANCE DATA FOR DISCONTINUED DOMESTIC FGD SYSTEMS

COMPANY NAME	GULF POWER	
PLANT NAME	SCHOLZ	
UNIT NUMBER	1A	
CITY	SNEADS	
STATE	FLORIDA	
REGULATORY CLASSIFICATION	C	
PARTICULATE EMISSION LIMITATION - NG/J	******	(****** LB/MMBTU)
SO2 EMISSION LIMITATION - NG/J	516.	(1.200 LB/MMBTU)
NOX EMISSION LIMITATION - NG/J	******	(****** LB/MMBTU)
NET PLANT GENERATING CAPACITY - MW	80	
GROSS UNIT GENERATING CAPACITY - MW	48	
NET UNIT GENERATING CAPACITY W/FGD - MW	40	
NET UNIT GENERATING CAPACITY WO/FGD - MW	*****	
EQUIVALENT SCRUBBED CAPACITY - MW	48	
** UNIT DATA - BOILER AND STACK		
BOILER SUPPLIER	BABCOCK & WILCOX	
BOILER TYPE	PULVERIZED COAL	
BOILER SERVICE LOAD	BASE	
DESIGN BOILER FLUE GAS FLOW - CU.M/S	********	(******* ACFM)
BOILER FLUE GAS TEMPERATURE - C	146.1	(295 F)
STACK HEIGHT - M	******	(**** FT)
STACK SHELL	NR	
STACK TOP DIAMETER - M	*******	(***** FT)
** FUEL DATA		
FUEL TYPE	COAL	
FUEL GRADE	******	
AVERAGE HEAT CONTENT - J/G	******	(****** BTU/LB)
RANGE HEAT CONTENT - BTU/LB		******
AVERAGE ASH CONTENT - %	********	
RANGE ASH CONTENT - %	******	
AVERAGE MOISTURE CONTENT - %	********	
RANGE MOISTURE CONTENT - %	******	
AVERAGE SULFUR CONTENT - %	5.00	
RANGE SULFUR CONTENT - %	******	
AVERAGE CHLORIDE CONTENT - %	********	
RANGE CHLORIDE CONTENT - %	******	
*** PARTICLE CONTROL		
** ESP		
NUMBER	1	
TYPE	COLD SIDE	
SUPPLIER	BUELL DIVISION, ENVIROTECH	
PARTICLE REMOVAL EFFICENCY - %	99.5	
** PARTICLE SCRUBBER		
NUMBER	1	
INITIAL START-UP DATE	2/75	
GENERIC TYPE	VENTURI TOWER	
SPECIFIC TYPE	VARIABLE-THROAT/TOP-ENTRY PLUMB BOB	
TRADE NAME/COMMON NAME	N/A	
SUPPLIER	THYSSEN/CEA	
SHELL GENERIC MATERIAL	CARBON STEEL	
SHELL SPECIFIC MATERIAL	AISI 1110	
LINER GENERIC MATERIAL	INORGANIC	
LINER SPECIFIC MATERIAL	HYDRAULICALLY-BONDED CEMENT	
GAS CONTACTING DEVICE TYPE	NONE	
*** FGD SYSTEM		
** GENERAL DATA		
SALEABLE PRODUCT/THROWAWAY PRODUCT	THROWAWAY PRODUCT	
SO2 REMOVAL MODE	WET SCRUBBING	
PROCESS TYPE	DUAL ALKALI	
SYSTEM SUPPLIER	THYSSEN/CEA	
DEVELOPMENT LEVEL	PROTOTYPE	
NEW/RETROFIT	RETROFIT	

GULF POWER: SCHOLZ 1A (CONT.)

UNIT DESIGN PARTICLE REMOVAL EFFICIENCY - %	99.70
UNIT DESIGN SO2 REMOVAL EFFICIENCY - %	95.00

WARNING **UNNORMALIZED NUMBER(S) BEING EDITED FOR OUTPUT**

ENERGY CONSUMPTION - %	.0
CURRENT STATUS	8
TERMINATION	7/76
COMMERCIAL START-UP	2/75

** DESIGN AND OPERATING PARAMETERS

** QUENCHER/PRESATURATOR

CONSTRUCTION MATERIAL GENERIC TYPE	NR
CONSTRUCTION MATERIAL SPECIFIC TYPE	NR

** ABSORBER

GENERIC TYPE	VENTURI TOWER
SPECIFIC TYPE	NR
TRADE NAME/COMMON TYPE	NR
SUPPLIER	THYSSEN/CEA
SHELL GENERIC MATERIAL	CARBON STEEL
SHELL SPECIFIC MATERIAL	AISI 1110
SHELL MATERIAL TRADE NAME/COMMON TYPE	N/A
LINER GENERIC MATERIAL	ORGANIC
LINER SPECIFIC MATERIAL	GLASS FLAKE-FILLED POLYESTER
LINER MATERIAL TRADE NAME/COMMON TYPE	NR
GAS CONTACTING DEVICE TYPE	NONE

** MIST ELIMINATOR

PRE-MIST ELIMINATOR/MIST ELIMINATOR	NR
GENERIC TYPE	NR
SPECIFIC TYPE	NR
TRADE NAME/COMMON TYPE	NR
CONSTRUCTION MATERIAL GENERIC TYPE	NR
CONSTRUCTION MATERIAL SPECIFIC TYPE	NR

** REHEATER

NUMBER	1
GENERIC TYPE	NR
SPECIFIC TYPE	NR
TRADE NAME/COMMON TYPE	NR
PERCENT GAS BYPASSED - AVG	5.0
CONSTRUCTION MATERIAL GENERIC TYPE	NR
CONSTRUCTION MATERIAL SPECIFIC TYPE	NR

** DAMPERS

FUNCTION	NR
GENERIC TYPE	NR
SPECIFIC TYPE	NR
CONSTRUCTION MATERIAL GENERIC TYPE	NR
CONSTRUCTION MATERIAL SPECIFIC TYPE	NR
LINER GENERIC MATERIAL TYPE	NR
LINER SPECIFIC MATERIAL TYPE	NR

** DUCTWORK

SHELL GENERIC MATERIAL TYPE	NR
SHELL SPECIFIC MATERIAL TYPE	NR
LINER GENERIC MATERIAL TYPE	NR
LINER SPECIFIC MATERIAL TYPE	NR

** REAGENT PREPARATION EQUIPMENT

FUNCTION	NR
DEVICE	NR
DEVICE TYPE	NR

** SOLIDS CONCENTRATING/DEWATERING

DEVICE	VACUUM FILTER
NUMBER	1
CONFIGURATION	ROTARY DRUM
SHELL SPECIFIC MATERIAL TYPE	PLASTIC & FIBERGLASS

GULF POWER: SCHOLZ 1A (CONT.)

*** SLUDGE

** TREATMENT

METHOD	DEWATERED
DEVICE	N/A
PROPRIETARY PROCESS	N/A

** DISPOSAL

NATURE	FINAL
TYPE	POND
LOCATION	ON-SITE
SITE TREATMENT	CLAY LINING

** WATER BALANCE

WATER LOOP TYPE	CLOSED

PERFORMANCE DATA

PERIOD	MODULE	AVAILABILITY	OPERABILITY	RELIABILITY	UTILIZATION	% REMOVAL SO2	% REMOVAL PART.	PER HOURS	BOILER HOURS	FGD HOURS	CAP. FACTOR
2/75	SYSTEM		98.9		67.6			672	459	454	

** PROBLEMS/SOLUTIONS/COMMENTS

THIS PROTOTYPE FGD SYSTEM INSTALLED AT THE SCHOLZ STEAM PLANT WAS INSTALLED ON THE NO. 1 BOILER. THE SYSTEM WAS DESIGNED TO HANDLE APPROXIMATELY 50% OF THE FLUE GAS FROM THE BOILER. THE BOILER WAS RETROFITTED WITH A SECTIONALIZED, HIGH EFFICIENCY ESP INSTALLED UPSTREAM OF THE FGD SYSTEM AND CAPABLE OF 99.7% PARTICLE MATTER REMOVAL.
THE PROTOTYPE SYSTEM INCORPORATED A HIGH DEGREE OF FLEXIBILITY FOR GENERATION OF DESIGN AND OPERATING INFORMATION FOR A WIDE VARIETY OF APPLICATIONS. ALTHOUGH THE BASIC MODE OF SYSTEM OPERATION WAS DUAL ALKALI WITH LIME REGENERATION, THE SYSTEM WAS DESIGNED TO ACCOMMODATE LIMESTONE REGENERATION AND LIME/LIMESTONE REGENERATION. THE SYSTEM CONSISTED OF A VENTURI SCRUBBER AND AN ABSORPTION TOWER, WITH AN ADDITIONAL STORAGE SILO FOR LIMESTONE, A MIX TANK, AND OTHER ASSORTED TANKS, PUMPS, CONTROLLERS, PIPING, AND A LINED DISPOSAL POND.

THE PROTOTYPE DUAL ALKALI SCRUBBING SYSTEM WAS COMPLETED AND PUT IN OPERATION IN EARLY FEBRUARY 1975.

3/75	SYSTEM		95.7		65.2			744	507	485	
4/75	SYSTEM		55.6		46.7			720	604	336	
5/75	SYSTEM		62.7		50.4			744	598	375	
6/75	SYSTEM		100.0		100.0			720	720	720	
7/75	SYSTEM		32.4		29.7			744	683	221	

** PROBLEMS/SOLUTIONS/COMMENTS

THE SYSTEM WAS OPERATED FROM FEBRUARY 8, 1975 UNTIL JULY 18 WHEN IT WAS TAKEN OUT OF SERVICE FOR TWO MONTHS FOR MODIFICATIONS, REPAIRS AND REPLACEMENT OF PARTS. THE SYSTEM WAS UNAVAILABLE FOR A 491 HOUR PERIOD DUE TO SOME NECESSARY ADJUSTMENTS AND MODIFICATIONS FOR A FORMAL EPA TEST PROGRAM IN MID-MAY.

8/75	SYSTEM		.0		.0			744	744	0	
9/75	SYSTEM		44.0		35.3			720	577	254	

PERFORMANCE DATA

PERIOD	MODULE	AVAILABILITY	OPERABILITY	RELIABILITY	UTILIZATION	% REMOVAL SO2	% REMOVAL PART.	PER HOURS	BOILER HOURS	FGD HOURS	CAP. FACTOR
	** PROBLEMS/SOLUTIONS/COMMENTS										
		THE SYSTEM WAS SHUT DOWN FROM MID-JULY TO MID-SEPTEMBER FOR A MECHANICAL OVEPHAUL INVOLVING REPLACEMENT OF VALVE PARTS THAT HAD FAILED. THE SYSTEM WAS PUT BACK IN OPERATION ON SEPTEMBER 16.									
10/75	SYSTEM	100.0		75.1				744	559	559	
	** PROBLEMS/SOLUTIONS/COMMENTS										
		FROM MID-SEPTEMBER UNTIL MID-OCTOBER THE AIR PREHEATER WAS REPAIRED AND BOILER OPERATION WAS ADJUSTED TO REDUCE OXYGEN LEVELS IN THE FLUE GAS TO THE 5-6% RANGE. THE SYSTEM OPERATED APPROXIMATELY 800 HOURS DURING THIS PERIOD.									
11/75	SYSTEM	90.3		77.8				720	620	560	
12/75	SYSTEM	100.0		98.4				744	732	732	
1/76	SYSTEM							744			
	** PROBLEMS/SOLUTIONS/COMMENTS										
		THE SYSTEM RAN CONTINUOUSLY FOR THE REMAINDER OF THE TEST PERIOD THROUGH JANUARY 2, 1976. SO2 LEVELS DURING THIS PERIOD RANGED FROM 800 TO 1700 PPM. THE SYSTEM OPERATED IN THE CONCENTRATED MODE THROUGHOUT THE REMAINDER OF THE TEST PERIOD. IN THE PERIOD FROM MID-SEPTEMBER TO JANUARY 2, 1976 THE SYSTEM OPERATED ABOUT 2100 HOURS, WITH AN OPERABILITY FACTOR OF 97%.									
2/76	SYSTEM							696			
	** PROBLEMS/SOLUTIONS/COMMENTS										
		THE FGD SYSTEM AND BOILER WERE SHUT DOWN FOR A SCHEDULED OVEPHAUL. THE SYSTEM WAS SCHEDULED TO RESTART IN MID-MARCH AND WAS TO CONTINUE UNTIL JUNE. DURING THIS OPEPATING PERIOD HIGH-SULFUR COAL (3.5-4.0%) WAS TO BE BURNED TO ALLOW EVALUATION OF SYSTEM PERFORMANCE ON HIGH SULFUR COAL.									
3/76	SYSTEM	60.0		59.8				744	742	445	
	** PROBLEMS/SOLUTIONS/COMMENTS										
		THE SYSTEM WAS RETURNED TO SERVICE ON MARCH 12, 1976. THE SYSTEM OPERATED A TOTAL OF 445 HOURS.									
5/76	SYSTEM	88.6		87.5				744	735	651	
	** PROBLEMS/SOLUTIONS/COMMENTS										
		DURING APRIL AND MAY SOME MINOR MECHANICAL PROBLEMS WITH THE AGITATOR SHAFT WERE ENCOUNTERED.									
		SOME PROBLEMS WERE EXPERIENCED WITH THE CONTROL VALVES DURING APRIL AND MAY ACCOUNTING FOR SOME FGD OUTAGE TIME.									
		SINCE THE SYSTEM RESTART IN MARCH, SO2 INLET CONCENTRATION LEVELS RANGED FROM 2000 TO 2500 PPM DUE TO THE BURNING OF HIGH SULFUR COAL.									
6/76	SYSTEM	97.7		89.0				720	656	641	

GULF POWER: SCHOLZ 1A (CONT.)

PERIOD	MODULE	AVAILABILITY	OPERABILITY	RELIABILITY	UTILIZATION	% REMOVAL SO2	% REMOVAL PART.	PER HOURS	BOILER HOURS	FGD HOURS	CAP. FACTOR
		PERFORMANCE DATA									

** PROBLEMS/SOLUTIONS/COMMENTS

DURING THE LAST PHASE OF OPERATION, THE SYSTEM WAS TREATING FLUE GAS OF VARYING PARTICULATE MATTER LOADS. THE UPSTREAM ESP WAS SELECTIVELY DE-ENERGIZED, BOTH PARTIALLY AND TOTALLY, WITH NO MAJOR UPSETS IN THE PROCESS CHEMISTRY RESULTING. BOILER LOAD VARIATION RANGED FROM 30 TO 100%.

7/76	SYSTEM	100.0		7.3	744	54	54

** PROBLEMS/SOLUTIONS/COMMENTS

ON JULY 3, 1976 THE PROTOTYPE TEST PROGRAM WAS CONCLUDED.

SECTION 16
DESIGN AND PERFORMANCE DATA FOR DISCONTINUED DOMESTIC FGD SYSTEMS

COMPANY NAME	GULF POWER	
PLANT NAME	SCHOLZ	
UNIT NUMBER	1B,2B	
CITY	SNEADS	
STATE	FLORIDA	
REGULATORY CLASSIFICATION	C	
PARTICULATE EMISSION LIMITATION - NG/J	******	(****** LB/MMBTU)
SO2 EMISSION LIMITATION - NG/J	516.	(1.200 LB/MMBTU)
NOX EMISSION LIMITATION - NG/J	******	(****** LB/MMBTU)
NET PLANT GENERATING CAPACITY - MW	80	
GROSS UNIT GENERATING CAPACITY - MW	48	
NET UNIT GENERATING CAPACITY W/FGD - MW	40	
NET UNIT GENERATING CAPACITY WO/FGD - MW	*****	
EQUIVALENT SCRUBBED CAPACITY - MW	48	
** UNIT DATA - BOILER AND STACK		
BOILER SUPPLIER	BABCOCK & WILCOX	
BOILER TYPE	PULVERIZED COAL	
BOILER SERVICE LOAD	BASE	
DESIGN BOILER FLUE GAS FLOW - CU.M/S	********	(******* ACFM)
BOILER FLUE GAS TEMPERATURE - C	146.1	(295 F)
STACK HEIGHT - M	23.	(76 FT)
STACK SHELL	FIBER-REINFORCED POLYESTER	
STACK TOP DIAMETER - M	*******	(***** FT)
** FUEL DATA		
FUEL TYPE	COAL	
FUEL GRADE	******	
AVERAGE HEAT CONTENT - J/G	******	(****** BTU/LB)
RANGE HEAT CONTENT - BTU/LB		******
AVERAGE ASH CONTENT - %	********	
RANGE ASH CONTENT - %	******	
AVERAGE MOISTURE CONTENT - %	********	
RANGE MOISTURE CONTENT - %	******	
AVERAGE SULFUR CONTENT - %	5.00	
RANGE SULFUR CONTENT - %	******	
AVERAGE CHLORIDE CONTENT - %	********	
RANGE CHLORIDE CONTENT - %	******	
*** PARTICLE CONTROL		
** ESP		
NUMBER	1	
TYPE	COLD SIDE	
SUPPLIER	BUELL DIVISION, ENVIROTECH	
PARTICLE REMOVAL EFFICENCY - %	99.5	
** PARTICLE SCRUBBER		
NUMBER	1	
INITIAL START-UP DATE	2/75	
GENERIC TYPE	VENTURI TOWER	
SPECIFIC TYPE	VARIABLE-THROAT/TOP-ENTRY PLUMB BOB	
TRADE NAME/COMMON NAME	N/A	
SUPPLIER	CHIYODA INTERNATIONAL	
SHELL GENERIC MATERIAL	CARBON STEEL	
SHELL SPECIFIC MATERIAL	AISI 1110	
LINER GENERIC MATERIAL	INORGANIC	
LINER SPECIFIC MATERIAL	HYDRAULICALLY-BONDED CEMENT	
GAS CONTACTING DEVICE TYPE	NONE	
*** FGD SYSTEM		
** GENERAL DATA		
SALEABLE PRODUCT/THROWAWAY PRODUCT	THROWAWAY PRODUCT	
SO2 REMOVAL MODE	WET SCRUBBING	
PROCESS TYPE	THOROUGHBRED 101	
SYSTEM SUPPLIER	CHIYODA INTERNATIONAL	
DEVELOPMENT LEVEL	PROTOTYPE	
NEW/RETROFIT	RETROFIT	

GULF POWER: SCHOLZ 1B,2B (CONT.)

UNIT DESIGN PARTICLE REMOVAL EFFICIENCY - %	99.70
UNIT DESIGN SO2 REMOVAL EFFICIENCY - %	90.00
ENERGY CONSUMPTION - %	*******
CURRENT STATUS	8
TERMINATION	3/77
COMMERCIAL START-UP	2/75

** DESIGN AND OPERATING PARAMETERS

** QUENCHER/PRESATURATOR

CONSTRUCTION MATERIAL GENERIC TYPE	NR
CONSTRUCTION MATERIAL SPECIFIC TYPE	NR

** ABSORBER

NUMBER	1
GENERIC TYPE	PACKED TOWER
SPECIFIC TYPE	NR
TRADE NAME/COMMON TYPE	NR
SUPPLIER	CHIYODA INTERNATIONAL
SHELL GENERIC MATERIAL	STAINLESS STEEL
SHELL SPECIFIC MATERIAL	AUSTENITIC
SHELL MATERIAL TRADE NAME/COMMON TYPE	TYPE 316L
LINER GENERIC MATERIAL	NONE
LINER SPECIFIC MATERIAL	N/A
LINER MATERIAL TRADE NAME/COMMON TYPE	N/A

** MIST ELIMINATOR

PRE-MIST ELIMINATOR/MIST ELIMINATOR	PRIMARY COLLECTOR
NUMBER PER SYSTEM	2
GENERIC TYPE	IMPINGEMENT
SPECIFIC TYPE	BAFFLE
TRADE NAME/COMMON TYPE	CLOSED VANE
CONSTRUCTION MATERIAL GENERIC TYPE	NR
CONSTRUCTION MATERIAL SPECIFIC TYPE	NR

** REHEATER

GENERIC TYPE	NR
SPECIFIC TYPE	NR
TRADE NAME/COMMON TYPE	NR
PERCENT GAS BYPASSED - AVG	5.0
CONSTRUCTION MATERIAL GENERIC TYPE	NR
CONSTRUCTION MATERIAL SPECIFIC TYPE	NR

** DAMPERS

FUNCTION	NR
GENERIC TYPE	NR
SPECIFIC TYPE	NR
CONSTRUCTION MATERIAL GENERIC TYPE	NR
CONSTRUCTION MATERIAL SPECIFIC TYPE	NR
LINER GENERIC MATERIAL TYPE	NR
LINER SPECIFIC MATERIAL TYPE	NR

** DUCTWORK

SHELL GENERIC MATERIAL TYPE	NR
SHELL SPECIFIC MATERIAL TYPE	NR
LINER GENERIC MATERIAL TYPE	NR
LINER SPECIFIC MATERIAL TYPE	NR

** REAGENT PREPARATION EQUIPMENT

FUNCTION	MIX TANK
DEVICE	N/A
DEVICE TYPE	AGITATED TANK

** SOLIDS CONCENTRATING/DEWATERING

DEVICE	CENTRIFUGE
NUMBER	1
CONFIGURATION	CONTINUOUS SCREW-DECANTER/SOLID BOWL

*** SLUDGE

GULF POWER: SCHOLZ 1B,2B (CONT.)

** TREATMENT

METHOD	DEWATERED
DEVICE	N/A
PROPRIETARY PROCESS	N/A

** DISPOSAL

NATURE	FINAL
TYPE	POND
SITE TREATMENT	CLAY LINING

** WATER BALANCE

WATER LOOP TYPE	OPEN

PERFORMANCE DATA

PERIOD	MODULE	AVAILABILITY	OPERABILITY	RELIABILITY	UTILIZATION	% REMOVAL SO2	% REMOVAL PART.	PER HOURS	BOILER HOURS	FGD HOURS	CAP. FACTOR
2/75	SYSTEM							672	672		

** PROBLEMS/SOLUTIONS/COMMENTS

THE FGD SYSTEM AT SCHOLZ 1B AND 2B WAS DESIGNED FOR TESTING AND PROCESS DEMONSTRATION OF THE THROUGHBRED 101 PROCESS ON A COAL-FIRED APPLICATION. THE PROCESS IS USED IN JAPAN EXCLUSIVELY ON OIL-FIRED AND GAS-FIRED BOILERS, AND TAIL GAS FROM CLAUS UNITS. THE SYSTEM WAS DESIGNED TO HANDLE 50% OF THE LOAD FROM EITHER OF THE TWO BOILERS. VARIOUS TEST COALS WITH SULFUR CONTENTS RANGING UP TO 5% WERE SCHEDULED FOR BURNING.
THE PARTICLE MATTER LOADS FROM THE ESP RANGED FROM 0.02 TO 0.1 GR/SCF. FLUE GAS FROM THE ESP WAS QUENCHED WITH COOLING WATER TO REMOVE ADDITIONAL FLY ASH AND TO COOL THE GAS BEFORE IT ENTERED THE ABSORBER. THE SO2 WAS ABSORBED IN WATER AND CATALYTICALLY OXIDIZED WITH AIR TO FORM SULFURIC ACID. THE DILUTE ACID WAS RECIRCULATED THROUGH THE ABSORBER. A PORTION OF THE ACID WAS NEUTRALIZED WITH LIMESTONE TO PRODUCE GYPSUM AS A BY-PRODUCT.

THE INITIAL SHAKEDOWN AND DEBUGGING OPERATIONS AT THIS PILOT PLANT SIZE DEMONSTRATION UNIT COMMENCED ON FEBRUARY 11, 1975. PROBLEMS ENCOUNTERED INCLUDED CRACKS IN THE FRP LINING AT THE OXIDIZING TOWER.

3/75	SYSTEM							744			
4/75	SYSTEM			27.8		27.8		720	720	200	
5/75	SYSTEM			13.4		13.4		744	744	100	
6/75	SYSTEM			100.0		95.1		720	685	685	
7/75	SYSTEM			83.9		83.9		744	744	624	

** PROBLEMS/SOLUTIONS/COMMENTS

AFTER INITIAL OPERATION FOR BREAK-IN TESTS IN MARCH, THE SYSTEM WAS SHUTDOWN FOR INTERNAL INSPECTION.

** PROBLEMS/SOLUTIONS/COMMENTS

RELIABILTY TESTS WERE PERFORMED IN JULY ALTHOUGH EMISSION TESTS HAD NOT BEEN RUN AT THIS TIME.

UP TO THIS POINT, SOME PUMP AND INSTRUMENTATION FAILURES HAD OCCURRED.

DURING JULY ONE CENTRIFUGE BECAME UNBALANCED, REQUIRING THE SPARE TO BE PLACED IN SERVICE.

8/75	SYSTEM							744			
9/75	SYSTEM			46.8		46.8		720	720	337	

GULF POWER: SCHOLZ 1B,2B (CONT.)

PERIOD	MODULE	AVAILABILITY	OPERABILITY	RELIABILITY	UTILIZATION	% REMOVAL SO2	% REMOVAL PART.	PER HOURS	BOILER HOURS	FGD HOURS	CAP. FACTOR
		PERFORMANCE DATA									

** PROBLEMS/SOLUTIONS/COMMENTS

DURING THE MONTH OF AUGUST BOTH CENTRIFUGES BECAME UNBALANCED REQUIRING A FORCED OUTAGE WHICH EXTENDED INTO MID-SEPTEMBER.

THE UNIT OPERATED AT A 95% SO2 REMOVAL EFFICIENCY DURING THE MONTH OF SEPTEMBER.

10/75	SYSTEM	100.0	100.0	744	744	744

** PROBLEMS/SOLUTIONS/COMMENTS

THE DISCHARGE OF WASTE WATER FROM THIS SYSTEM WAS A CONTIUOUS PROBLEM AREA.

11/75	SYSTEM	100.0	100.0	720	720	720

** PROBLEMS/SOLUTIONS/COMMENTS

A MINOR OUTAGE OF LESS THAN ONE HOUR WAS NECESSARY TO REPAIR A PINHOLE IN THE PRESCRUBBER FRP LINER AND TO REPAIR A BROKEN FLUE GAS BLOWER INLET VANE.

12/75	SYSTEM	97.6	97.6	744	744	726

** PROBLEMS/SOLUTIONS/COMMENTS

SCRUBBER OUTAGES DURING DECEMBER RESULTED FROM CONTINUING REPAIRS TO THE PINHOLE IN THE PRESCRUBBER FRP LINER.

1/76	SYSTEM	66.2	60.5	744	680	450
2/76	SYSTEM	11.2	11.1	696	690	77

** PROBLEMS/SOLUTIONS/COMMENTS

OUTAGE TIME IN JANUARY AND FEBRUARY WAS PRIMARILY FOR REPAIR AND MODIFICATION OF THE SUCTION AND DISCHARGE PIPING ON THE ABSORBENT CIRCULATING PUMPS. THESE FRP LINES FAILED IN JANUARY AT SOME WEAK JOINTS.

SO2 REMOVAL EFFICIENCY UP TO THIS PERIOD HAS BEEN AS HIGH AS 95%.

3/76	SYSTEM	99.6	99.6	744	744	741
4/76	SYSTEM	14.0	14.0	720	720	101

** PROBLEMS/SOLUTIONS/COMMENTS

THE SYSTEM WAS SHUTDOWN ON APRIL 5 TO ALLOW SYSTEM MODIFICATIONS FOR REDUCING THE QUANTITY OF LIQUID WASTE FROM THE SYSTEM.

THE SYSTEM WAS SHUTDOWN ON APRIL 24 BECAUSE OF EXTENSIVE FIRE DAMAGE IN THE OXIDIZING TOWER. THE FIRE, CAUSED BY A WELDING ACCIDENT, DAMAGED FRP AND POLYPROPYLENE COMPONENTS IN THE OXIDIZING TOWER.

5/76	SYSTEM	.0	744	0
6/76	SYSTEM	.0	720	0
7/76	SYSTEM	.0	744	0

PERIOD	MODULE	AVAILABILITY	OPERABILITY	RELIABILITY	UTILIZATION	% REMOVAL SO2	% REMOVAL PART.	PER HOURS	BOILER HOURS	FGD HOURS	CAP. FACTOR
		PERFORMANCE DATA									
	** PROBLEMS/SOLUTIONS/COMMENTS										
			THE SYSTEM REMAINED OUT OF SERVICE DURING MAY, JUNE AND JULY TO REPAIR THE FIRE DAMAGED AREAS.								
8/76	SYSTEM		66.1		66.1			744	744	492	
	** PROBLEMS/SOLUTIONS/COMMENTS										
			THE SYSTEM CAME BACK ON LINE IN AUGUST; BUT, WAS BROUGHT DOWN DURING THE MONTH TO COMPLETE ADDITIONAL REPAIRS WHICH WENT UNDETECTED DURING THE PREVIOUS OUTAGE. THESE ADDITIONAL REPAIRS ACCOUNTED FOR APPROXIMATELY 242 HOURS OF OUTAGE TIME.								
			THE WATERS SAVINGS PROGRAM WAS TESTED DURING AUGUST. THE TEST PROGRAM CALLED FOR A REDUCTION IN WASTEWATER BLOWDOWN AND FRESH WATER MAKEUP REQUIREMENTS BY RECYCLING THE MOTHER LIQUOR BLEED BACK TO THE PROCESS FOR ADDITIONAL SERVICE.								
9/76	SYSTEM	99.3	68.9	99.3	68.9			720	720	496	
	** PROBLEMS/SOLUTIONS/COMMENTS										
			THE SYSTEM WAS FORCED OUT OF SERVICE APPROXIMATELY FIVE HOURS DURING SEPTEMBER.								
10/76	SYSTEM	70.6	48.0	62.0	48.0			744	744	357	
	** PROBLEMS/SOLUTIONS/COMMENTS										
			DURING OCTOBER SYSTEM DOWN TIME AMOUNTED TO APPROXIMATELY 387 HOURS. OF THIS TOTAL 218 HOURS WERE REPORTED TO REPAIR ANTICIPATED DAMAGES INCURRED IN THE PRESCRUBBER RESULTING FROM OPERATIONS IN THE WATER SAVINGS PROGRAM. SPECIFICALLY, THE LINING HAD SUFFERED FROM EXTENSIVE CORROSION DAMAGE BECAUSE OF HIGH ACID CONCENTRATIONS WHICH DEVELOPED IN THE SCRUBBER SOLUTION.								
			DURING OCTOBER SYSTEM DOWN TIME AMOUNTED TO APPROXIMATELY 387 HOURS. OF								
11/76	SYSTEM	99.6	99.6	99.6	99.6			720	720	717	
12/76	SYSTEM	99.6	99.6	99.6	99.6			744	744	741	
	** PROBLEMS/SOLUTIONS/COMMENTS										
			DURING NOVEMBER AND DECEMBER SCRUBBER OUTAGES TOTALLED 6.5 HOURS. PROBLEMS INCLUDED A MALFUNCTION OF A LEVEL INDICATOR, A BROKEN GUIDE VANE, AND AN OPERATOR ERROR RESULTING IN A LEAK OF SLURRY INTO THE WATER HEADER.								
1/77	SYSTEM	100.0	100.0	100.0	100.0			744	744	744	
2/77	SYSTEM	100.0	100.0	100.0	100.0			672	672	672	
3/77	SYSTEM	100.0		100.0				744	744	514	
	** PROBLEMS/SOLUTIONS/COMMENTS										
			THE CT-101 TESTING AND DEMONSTRATION PROGRAM WAS CONCLUDED ON MARCH 22. DURING JANUARY, FEBRUARY AND MARCH THE TOTAL SCRUBBER OUTAGE TIME WAS 0.33 HOUR. THE SYSTEM HAD OPERATED ON A VIRTUALLY CONTINUOUS BASIS SINCE OCTOBER 17, 1976.								

SECTION 16
DESIGN AND PERFORMANCE DATA FOR DISCONTINUED DOMESTIC FGD SYSTEMS

COMPANY NAME	GULF POWER	
PLANT NAME	SCHOLZ	
UNIT NUMBER	1,2	
CITY	SNEADS	
STATE	FLORIDA	
REGULATORY CLASSIFICATION	C	
PARTICULATE EMISSION LIMITATION - NG/J	******	(****** LB/MMBTU)
SO2 EMISSION LIMITATION - NG/J	******	(****** LB/MMBTU)
NOX EMISSION LIMITATION - NG/J	******	(****** LB/MMBTU)
NET PLANT GENERATING CAPACITY - MW	80	
GROSS UNIT GENERATING CAPACITY - MW	23	
NET UNIT GENERATING CAPACITY W/FGD - MW	23	
NET UNIT GENERATING CAPACITY WO/FGD - MW	*****	
EQUIVALENT SCRUBBED CAPACITY - MW	23	
** UNIT DATA - BOILER AND STACK		
BOILER SUPPLIER	BABCOCK & WILCOX	
BOILER TYPE	PULVERIZED COAL	
BOILER SERVICE LOAD	BASE	
DESIGN BOILER FLUE GAS FLOW - CU.M/S	********	(******* ACFM)
BOILER FLUE GAS TEMPERATURE - C	*******	(**** F)
STACK HEIGHT - M	23.	(76 FT)
STACK SHELL	FIBER-REINFORCED POLYESTER	
STACK TOP DIAMETER - M	*******	(***** FT)
** FUEL DATA		
FUEL TYPE	COAL	
FUEL GRADE	BITUMINOUS	
AVERAGE HEAT CONTENT - J/G	29075.	(12500 BTU/LB)
RANGE HEAT CONTENT - BTU/LB		******
AVERAGE ASH CONTENT - %	11.00	
RANGE ASH CONTENT - %	******	
AVERAGE MOISTURE CONTENT - %	5.00	
RANGE MOISTURE CONTENT - %	******	
AVERAGE SULFUR CONTENT - %	2.50	
RANGE SULFUR CONTENT - %	2.5-5.0	
AVERAGE CHLORIDE CONTENT - %	********	
RANGE CHLORIDE CONTENT - %	******	
*** PARTICLE CONTROL		
** ESP		
NUMBER	2	
TYPE	COLD SIDE	
SUPPLIER	BUELL DIVISION, ENVIROTECH	
INLET FLUE GAS TEMPERATURE - C	151.7	(305 F)
PARTICLE REMOVAL EFFICENCY - %	99.5	
** PARTICLE SCRUBBER		
GENERIC TYPE	NONE	
SPECIFIC TYPE	N/A	
TRADE NAME/COMMON NAME	N/A	
GAS CONTACTING DEVICE TYPE	N/A	
*** FGD SYSTEM		
** GENERAL DATA		
SALEABLE PRODUCT/THROWAWAY PRODUCT	THROWAWAY PRODUCT	
SO2 REMOVAL MODE	WET SCRUBBING	
PROCESS TYPE	LIMESTONE/THOROUGHBRED 121	
PROCESS ADDITIVES	NONE	
SYSTEM SUPPLIER	CHIYODA INTERNATIONAL	
A-E FIRM	CHIYODA CHEMICAL ENG'R & CONSTION	
DEVELOPMENT LEVEL	PROTOTYPE	
NEW/RETROFIT	RETROFIT	
UNIT DESIGN PARTICLE REMOVAL EFFICIENCY - %	99.50	
UNIT DESIGN SO2 REMOVAL EFFICIENCY - %	90.00	

WARNING **UNNORMALIZED NUMBER(S) BEING EDITED FOR OUTPUT**

ENERGY CONSUMPTION - %	.0
CURRENT STATUS	8

GULF POWER: SCHOLZ 1,2 (CONT.)

TERMINATION	6/79
INITIAL START-UP	8/78

** DESIGN AND OPERATING PARAMETERS

** QUENCHER/PRESATURATOR

CONSTRUCTION MATERIAL GENERIC TYPE	NR
CONSTRUCTION MATERIAL SPECIFIC TYPE	NR

** ABSORBER

NUMBER	1	
GENERIC TYPE	MECHANICALLY-AIDED TOWER	
SPECIFIC TYPE	GAS SPARGER	
TRADE NAME/COMMON TYPE	JET BUBBLER REACTOR	
SUPPLIER	CHIYODA INTERNATIONAL	
DIMENSIONS - FT	24.0 DIA	
SHELL GENERIC MATERIAL	STAINLESS STEEL	
SHELL SPECIFIC MATERIAL	AUSTENITIC	
SHELL MATERIAL TRADE NAME/COMMON TYPE	NR	
LINER GENERIC MATERIAL	ORGANIC	
LINER SPECIFIC MATERIAL	FIBER-REINFORCED POLYESTER	
LINER MATERIAL TRADE NAME/COMMON TYPE	NR	
GAS CONTACTING DEVICE TYPE	N/A	
NUMBER OF CONTACTING ZONES	1	
INLET GAS FLOW - CU. M/S	37.75	(80000 ACFM)
INLET GAS TEMPERATURE - C	148.9	(300 F)
SO2 REMOVAL EFFICIENCY - %	95.0	

** MIST ELIMINATOR

PRE-MIST ELIMINATOR/MIST ELIMINATOR	PRIMARY COLLECTOR	
NUMBER PER SYSTEM	1	
GENERIC TYPE	IMPINGEMENT	
SPECIFIC TYPE	BAFFLE	
TRADE NAME/COMMON TYPE	CLOSED VANE	
CONFIGURATION	VERTICAL	
NUMBER OF STAGES	2	
NUMBER OF PASSES PER STAGE	2	
PRESSURE DROP - KPA	.2	(1.0 IN-H2O)
CONSTRUCTION MATERIAL GENERIC TYPE	NR	
CONSTRUCTION MATERIAL SPECIFIC TYPE	NR	

** REHEATER

GENERIC TYPE	NONE
SPECIFIC TYPE	N/A
TRADE NAME/COMMON TYPE	N/A
CONSTRUCTION MATERIAL GENERIC TYPE	NONE
CONSTRUCTION MATERIAL SPECIFIC TYPE	N/A

** FANS

NUMBER	1	
APPLICATION	FORCED DRAFT	
FLUE GAS FLOW RATE - CU.M/S	25.01	(53000 ACFM)
FLUE GAS TEMPERATURE - C	148.9	(300 F)

** DAMPERS

FUNCTION	NR
GENERIC TYPE	NR
SPECIFIC TYPE	NR
CONSTRUCTION MATERIAL GENERIC TYPE	NR
CONSTRUCTION MATERIAL SPECIFIC TYPE	NR
LINER GENERIC MATERIAL TYPE	NR
LINER SPECIFIC MATERIAL TYPE	NR

** DUCTWORK

SHELL GENERIC MATERIAL TYPE	NR
SHELL SPECIFIC MATERIAL TYPE	NR
LINER GENERIC MATERIAL TYPE	NR
LINER SPECIFIC MATERIAL TYPE	NR

GULF POWER: SCHOLZ 1,2 (CONT.)

** REAGENT PREPARATION EQUIPMENT

FUNCTION	WET BALL MILL
DEVICE	COMPARTMENTED
DEVICE TYPE	NR

** SOLIDS CONCENTRATING/DEWATERING

DEVICE	NONE

*** SALEABLE BYPRODUCTS

NATURE	GYPSUM
DISPOSITION	STACKED IN POND

*** SLUDGE

** TREATMENT

METHOD	FORCED OXIDATION
DEVICE	JET BUBBLER
PROPRIETARY PROCESS	N/A

** DISPOSAL

NATURE	FINAL
TYPE	POND
SITE TREATMENT	CLAY LINING

** PROCESS CONTROL AND INSTRUMENTATION

PROCESS CONTROL MANNER	MANUAL

** WATER BALANCE

WATER LOOP TYPE	CLOSED

PERFORMANCE DATA

PERIOD	MODULE	AVAILABILITY	OPERABILITY	RELIABILITY	UTILIZATION	% REMOVAL SO2	% REMOVAL PART.	PER HOURS	BOILER HOURS	FGD HOURS	CAP. FACTOR
8/78	SYSTEM							744			

** PROBLEMS/SOLUTIONS/COMMENTS

OPERATION BEGAN ON AUGUST 30, 1978.

NO INITIAL OPERATIONAL PROBLEMS WERE REPORTED.

9/78	SYSTEM							720			
10/78	SYSTEM		100.0					720			

** PROBLEMS/SOLUTIONS/COMMENTS

NO MAJOR OPERATIONAL PROBLEMS WERE REPORTED.

A 130 HOUR SCHEDULED OUTAGE OCCURRED IN OCTOBER.

11/78	SYSTEM		94.8					720			
12/78	SYSTEM		100.0					744			

** PROBLEMS/SOLUTIONS/COMMENTS

THERE WERE NO UNPLANNED SHUTDOWNS DURING DECEMBER AND JANUARY.

THE SYSTEM WAS BEING OPERATED IN WHAT WAS CALLED PHASE II OF THE TESTING. THE SYSTEM WAS DELIBERATELY BEING UPSET FROM EQUILIBRIUM (PH, OXIDIZING AI INPUT, ETC.) TO SEE HOW IT RESPONDED.

PERIOD	MODULE	AVAILABILITY	OPERABILITY	RELIABILITY	UTILIZATION	% REMOVAL SO2	% REMOVAL PART.	PER HOURS	BOILER HOURS	FGD HOURS	CAP. FACTOR
		PERFORMANCE DATA									
1/79	SYSTEM		100.0					744		0	
2/79	SYSTEM		98.3		98.4			672	672	661	
3/79	SYSTEM	100.0	100.0	100.0	100.0			744	744	744	
4/79	SYSTEM	100.0	100.0	100.0	100.0			720	720	720	

** PROBLEMS/SOLUTIONS/COMMENTS

ONE PUMP FAILURE CAUSING A 5 MINUTE OUTAGE WAS REPORTED BY THE UTILITY.

HIGH PARTICULATE LOADING TESTS WERE DONE IN APRIL. THE ESP WAS TOTALLY SHUT DOWN. THE SO2 REMOVAL WAS NOT AFFECTED BUT THE GYPSUM PRODUCT WAS TEMPORARILY AFFECTED. HIGH CHLORIDE TESTS WERE ALSO PERFORMED BY ADDING CALCIUM CHLORIDE TO THE SYSTEM. A RESULTANT CONCENTRATION OF 6000 PPM CHLORIDE WAS FOUND IN THE UNDERFLOW. NO SIGNIFICANT SCALING WAS ENCOUNTERED.

5/79	SYSTEM							744			
6/79	SYSTEM							720			

** PROBLEMS/SOLUTIONS/COMMENTS

THE FGD SYSTEM OPERATED THROUGH THE 24TH OF MAY WHEN THE SYSTEM WAS REMOVED FROM SERVICE BECAUSE THE EPRI STUDIES WERE COMPLETED.
JUNE:
AFTER SHUTDOWN THE UNIT WAS MODIFIED TO SIMULATE A SMALLER JET BUBBLER REACTOR WITH THE SAME AMOUNT OF FLUE GAS. THIS WAS DONE BY PLUGGING SOME OF THE SPARGERS AND RISER TUBES. THE UNIT WAS OPERATED LIKE THIS FROM JUNE 8 UNTIL JUNE 29 WITH RESULTS THAT INDICATED SLIGHTLY REDUCED REMOVAL EFFICIENCIES. DURING THE 21 DAYS OF OPERATION THE UNIT WAS DOWN ONLY ONCE FOR NINE HOURS FOR ROUTINE INSPECTION.
DURING THE EPRI STUDY A TOTAL OF 4448 HOURS OF OPERATION WERE LOGGED WITH A TOTAL OF 123.3 HOURS OF SHUTDOWN. THE AVERAGE AVAILABILITY FOR SIX MONTHS WAS 99.53%.
ALL STUDIES WERE COMPLETED AND THE SYSTEM HAS BEEN TERMINATED.

SECTION 16
DESIGN AND PERFORMANCE DATA FOR DISCONTINUED DOMESTIC FGD SYSTEMS

COMPANY NAME	GULF POWER	
PLANT NAME	SCHOLZ	
UNIT NUMBER	2A	
CITY	SNEADS	
STATE	FLORIDA	
REGULATORY CLASSIFICATION	C	
PARTICULATE EMISSION LIMITATION - NG/J	******	(****** LB/MMBTU)
SO2 EMISSION LIMITATION - NG/J	******	(****** LB/MMBTU)
NOX EMISSION LIMITATION - NG/J	******	(****** LB/MMBTU)
NET PLANT GENERATING CAPACITY - MW	80	
GROSS UNIT GENERATING CAPACITY - MW	48	
NET UNIT GENERATING CAPACITY W/FGD - MW	40	
NET UNIT GENERATING CAPACITY WO/FGD - MW	*****	
EQUIVALENT SCRUBBED CAPACITY - MW	48	
** UNIT DATA - BOILER AND STACK		
BOILER SUPPLIER	BABCOCK & WILCOX	
BOILER TYPE	PULVERIZED COAL	
BOILER SERVICE LOAD	BASE	
DESIGN BOILER FLUE GAS FLOW - CU.M/S	********	(******* ACFM)
BOILER FLUE GAS TEMPERATURE - C	146.1	(295 F)
STACK HEIGHT - M	******	(**** FT)
STACK SHELL	******	
STACK TOP DIAMETER - M	*******	(***** FT)
** FUEL DATA		
FUEL TYPE	COAL	
FUEL GRADE	BITUMINOUS	
AVERAGE HEAT CONTENT - J/G	******	(****** BTU/LB)
RANGE HEAT CONTENT - BTU/LB		******
AVERAGE ASH CONTENT - %	********	
RANGE ASH CONTENT - %	******	
AVERAGE MOISTURE CONTENT - %	********	
RANGE MOISTURE CONTENT - %	******	
AVERAGE SULFUR CONTENT - %	3.50	
RANGE SULFUR CONTENT - %	******	
AVERAGE CHLORIDE CONTENT - %	********	
RANGE CHLORIDE CONTENT - %	******	
*** PARTICLE CONTROL		
** MECHANICAL COLLECTOR		
NUMBER	0	
TYPE	NONE	
** ESP		
NUMBER	1	
** PARTICLE SCRUBBER		
GENERIC TYPE	NONE	
SPECIFIC TYPE	N/A	
TRADE NAME/COMMON NAME	N/A	
GAS CONTACTING DEVICE TYPE	N/A	
*** FGD SYSTEM		
** GENERAL DATA		
SALEABLE PRODUCT/THROWAWAY PRODUCT	SALEABLE PRODUCT	
SO2 REMOVAL MODE	DRY ADSORPTION	
PROCESS TYPE	ACTIVATED CARBON	
SYSTEM SUPPLIER	FOSTER WHEELER/BEPGBAU	
DEVELOPMENT LEVEL	DEMONSTRATION	
NEW/RETROFIT	RETROFIT	
UNIT DESIGN PARTICLE REMOVAL EFFICIENCY - %	99.70	
UNIT DESIGN SO2 REMOVAL EFFICIENCY - %	74.50	

WARNING **UNNORMALIZED NUMBER(S) BEING EDITED FOR OUTPUT**

ENERGY CONSUMPTION - %	*******
CURRENT STATUS	8
TERMINATION	5/76
COMMERCIAL START-UP	2/76

GULF POWER: SCHOLZ 2A (CONT.)

INITIAL START-UP	8/75
CONTRACT AWARDED	1/73

** DESIGN AND OPERATING PARAMETERS

** QUENCHER/PRESATURATOR

CONSTRUCTION MATERIAL GENERIC TYPE	NR
CONSTRUCTION MATERIAL SPECIFIC TYPE	NR

** ABSORBER

NUMBER	1
GENERIC TYPE	PACKED TOWER
SPECIFIC TYPE	NR
TRADE NAME/COMMON TYPE	NR
SUPPLIER	FOSTER WHEELER/BERGBAU
SHELL GENERIC MATERIAL	NR
SHELL SPECIFIC MATERIAL	NR
SHELL MATERIAL TRADE NAME/COMMON TYPE	NR
LINER GENERIC MATEPIAL	NR
LINER SPECIFIC MATERIAL	NR
LINER MATERIAL TRADE NAME/COMMON TYPE	NR

** MIST ELIMINATOR

PRE-MIST ELIMINATOR/MIST ELIMINATOR	NR
GENERIC TYPE	NR
SPECIFIC TYPE	NR
TRADE NAME/COMMON TYPE	NR
CONSTRUCTION MATERIAL GENERIC TYPE	NR
CONSTRUCTION MATERIAL SPECIFIC TYPE	NR

** REHEATER

NUMBER	0
GENERIC TYPE	NONE
SPECIFIC TYPE	N/A
TRADE NAME/COMMON TYPE	N/A
CONSTRUCTION MATERIAL GENERIC TYPE	NONE
CONSTRUCTION MATERIAL SPECIFIC TYPE	N/A

** DAMPEPS

FUNCTION	NR
GENERIC TYPE	NR
SPECIFIC TYPE	NR
CONSTPUCTION MATERIAL GENERIC TYPE	NR
CONSTRUCTION MATERIAL SPECIFIC TYPE	NR
LINER GENERIC MATERIAL TYPE	NR
LINER SPECIFIC MATERIAL TYPE	NR

** DUCTWORK

SHELL GENERIC MATERIAL TYPE	NR
SHELL SPECIFIC MATERIAL TYPE	NR
LINER GENERIC MATERIAL TYPE	NR
LINER SPECIFIC MATERIAL TYPE	NR

** REAGENT PREPARATION EQUIPMENT

FUNCTION	N/A
DEVICE	N/A
DEVICE TYPE	N/A

** SOLIDS CONCENTRATING/DEWATERING

DEVICE	NONE

*** SLUDGE

** TREATMENT

METHOD	N/A
DEVICE	N/A
PROPRIETARY PROCESS	N/A

GULF POWER: SCHOLZ 2A (CONT.)

** DISPOSAL

NATURE	FINAL
TYPE	POND
SITE TREATMENT	CLAY LINING

PERFORMANCE DATA

PERIOD	MODULE	AVAILABILITY	OPERABILITY	RELIABILITY	UTILIZATION	% REMOVAL SO2	% REMOVAL PART.	PER HOURS	BOILER HOURS	FGD HOURS	CAP. FACTOR
5/75	SYSTEM							744			

** PROBLEMS/SOLUTIONS/COMMENTS

THE DEMONSTRATION SYSTEM AT SCHOLZ 2A CONSISTED OF A 20-MW ADSORBER SECTION AND A 47.5 MW REGENERATION AND REDUCTION SECTION. THE 20 MW ADSORBER WAS DESIGNED TO HANDLE 50% OF THE MAXIMUM FLUE GAS FLOW. THE PURPOSE OF THE ADSORPTION SECTION OF THE DRY REMOVAL SYSTEM WAS TO REMOVE SULFUR DIOXIDE; NITROGEN OXIDES, AND PARTICLE MATTER FROM THE FLUE GAS WITH ACTIVATED CHAR, CONVERTING THE CAPTURED POLLUTANTS TO SULFURIC ACID. THE REGENERATION SECTION PROVIDED CONTINUOUS ON-SITE REGENERATION OF THE CHAR, WHICH WAS LOADED WITH SULFUR DIOXIDE IN THE FORM OF SULFURIC ACID. THE REGENERATED CHAR AND A LOW VOLUME, SULFUR DIOXIDE-RICH OFF-GAS STREAM WAS FED TO A RESOX REACTOR, WHICH REDUCED THE SULFUR DIOXIDE STREAM TO GASEOUS ELEMENTAL SULFUR THAT WAS COLLECTED AND STORED IN AN INSULATED TANK.

6/75	SYSTEM							720			
7/75	SYSTEM							744			

** PROBLEMS/SOLUTIONS/COMMENTS

COMPLETION OF CONSTRUCTION WAS FOLLOWED BY A THREE MONTH COMMISSIONING PERIOD DURING WHICH VARIOUS PIECES OF EQUIPMENT WERE OPERATED INDIVIDUALLY AND THEN IN COMBINATIONS TO SIMULATE SUBSYSTEM OPERATION.

8/75	SYSTEM							744			

** PROBLEMS/SOLUTIONS/COMMENTS

SUBSYSTEM OPERATIONS WERE INTEGRATED INTO SECTION OPERATIONS AND FLUE GAS WAS PASSED THROUGH THE ABSORBER AND REGENERATOR FOR A TEN DAY PERIOD BEGINNING AUGUST 11. RESOX CONSTRUCTION WAS INCOMPLETE AT THIS TIME.

9/75	SYSTEM							720			
10/75	SYSTEM							744			

** PROBLEMS/SOLUTIONS/COMMENTS

DURING OCTOBER TWO CONSECUTIVE RUNS WERE CONDUCTED ON THE RESOX PORTION OF THE SYSTEM ON FRONT-END PROCESS OFF-GAS AT FULL OPERATING TEMPERATURES. THIS OPERATIONAL PERIOD LASTED FIVE DAYS.

11/75	SYSTEM							720			
12/75	SYSTEM							744			
1/76	SYSTEM							744			

** PROBLEMS/SOLUTIONS/COMMENTS

A PROGRAM OF MODIFICATIONS ON THE SYSTEM BEGAN IN LATE AUGUST 1975 AND CONTINUED THROUGH JANUARY 1976, WITH THE EXCEPTION OF FIVE DAYS OF RESOX OPERATION IN OCTOBER.

2/76	SYSTEM							696			

PERIOD	MODULE	AVAILABILITY	OPERABILITY	RELIABILITY	UTILIZATION	% REMOVAL SO2	% REMOVAL PART.	PER HOURS	BOILER HOURS	FGD HOURS	CAP. FACTOR

** PROBLEMS/SOLUTIONS/COMMENTS

MODIFICATIONS WERE COMPLETED AND PRE-STARTUP TESTING WAS CONDUCTED IN LATE JANUARY AND EARLY FEBRUARY. A THREE DAY CONTINUOUS RUN WAS SUCCESSFULLY COMPLETED.

DURING FEBRUARY THE MATERIALS HANDLING LOOPS AND THE RESOX LOOPS WERE OPERATED AT FULL OPERATING TEMPERATURES AND PRESSURES. REINTRODUCTION OF FLUE GAS INTO THE SYSTEM COMMENCED, AND A FOUR MONTH FORMAL TEST PROGRAM CONDUCTED BY SOUTHERN SERVICES AND FOSTER WHEELER BEGAN.

3/76	SYSTEM							744			
4/76	SYSTEM							720			

** PROBLEMS/SOLUTIONS/COMMENTS

THREE OPERATIONAL PERIODS WERE LOGGED BY THE PROTOTYPE SYSTEM DURING MARCH AND APRIL. THE RESOX SECTION OPERATED INTERMITTENTLY BECAUSE OF PLUGGING PROBLEMS IN THE SULFUR CONDENSER. ALSO, THE FRONT END OF THE SYSTEM WAS TAKEN OUT OF SERVICE AT ONE POINT DUE TO FREQUENT HIGH TEMPERATURE EXCURSIONS. THIS PROBLEM WAS CORRECTED BY MODIFYING SYSTEM OPERATING PROCEDURES. WORK BEGAN ON THE SOLUTION OF THE SULFUR CONDENSER PROBLEM.

5/76	SYSTEM							744			

** PROBLEMS/SOLUTIONS/COMMENTS

THE FGD SYSTEM COMPLETED AN OPERATIONAL PERIOD IN EARLY MAY WHICH HAD COMMENCED ON APRIL 26. THE SYSTEM WAS TAKEN OUT OF SERVICE AT THIS POINT DUE TO THE DEPLETION OF CHAR SUPPLY, HIGH CHAR CONSUMPTION RATES DUE TO MECHANICAL ATTRITION AND TO CORRECT/MODIFY THE CHAR/SAND SCREEN SEPARATOR.

DURING MAY A DECISION WAS MADE TO PREMATURELY TERMINATE THE SYSTEM DEMONSTRATION PROGRAM RATHER THAN SHUT DOWN, DEBUG AND RESTART THE SYSTEM AGAIN. THE SYSTEM SUPPLIER WAS PURSUING ADDITIONAL FUNDING FOR THE CONTINUATION OF THE PROTOTYPE DEMONSTRATION PROGRAM.

SECTION 16
DESIGN AND PERFORMANCE DATA FOR DISCONTINUED DOMESTIC FGD SYSTEMS

COMPANY NAME	ILLINOIS POWER COMPANY	
PLANT NAME	WOOD RIVER	
UNIT NUMBER	4	
CITY	EAST ALTON	
STATE	ILLINOIS	
REGULATORY CLASSIFICATION	D	
PARTICULATE EMISSION LIMITATION - NG/J	******	(****** LB/MMBTU)
SO2 EMISSION LIMITATION - NG/J	774.	(1.800 LB/MMBTU)
NOX EMISSION LIMITATION - NG/J	******	(****** LB/MMBTU)
NET PLANT GENERATING CAPACITY - MW	651	
GROSS UNIT GENERATING CAPACITY - MW	110	
NET UNIT GENERATING CAPACITY W/FGD - MW	103	
NET UNIT GENERATING CAPACITY WO/FGD - MW	*****	
EQUIVALENT SCRUBBED CAPACITY - MW	110	
** UNIT DATA - BOILER AND STACK		
BOILER SUPPLIER	COMBUSTION ENGINEERING	
BOILER TYPE	PULVERIZED COAL	
BOILER SERVICE LOAD	BASE	
DESIGN BOILER FLUE GAS FLOW - CU.M/S	********	(******* ACFM)
BOILER FLUE GAS TEMPERATURE - C	154.4	(310 F)
STACK HEIGHT - M	76.	(250 FT)
STACK SHELL	******	
STACK TOP DIAMETER - M	*******	(***** FT)
** FUEL DATA		
FUEL TYPE	COAL	
FUEL GRADE	******	
AVERAGE HEAT CONTENT - J/G	25121.	(10800 BTU/LB)
RANGE HEAT CONTENT - BTU/LB		******
AVERAGE ASH CONTENT - %	10.00	
RANGE ASH CONTENT - %	******	
AVERAGE MOISTURE CONTENT - %	4.30	
RANGE MOISTURE CONTENT - %	******	
AVERAGE SULFUR CONTENT - %	3.10	
RANGE SULFUR CONTENT - %	******	
AVERAGE CHLORIDE CONTENT - %	********	
RANGE CHLORIDE CONTENT - %	******	
*** PARTICLE CONTROL		
** MECHANICAL COLLECTOR		
NUMBER	1	
** FABRIC FILTER		
NUMBER	0	
TYPE	NONE	
** ESP		
NUMBER	1	
SUPPLIER	RESEARCH-COTTRELL	
PARTICLE REMOVAL EFFICENCY - %	99.6	
** PARTICLE SCRUBBER		
GENERIC TYPE	NONE	
SPECIFIC TYPE	N/A	
TRADE NAME/COMMON NAME	N/A	
GAS CONTACTING DEVICE TYPE	N/A	
*** FGD SYSTEM		
** GENERAL DATA		
SALEABLE PRODUCT/THROWAWAY PRODUCT	SALEABLE PRODUCT	
SO2 REMOVAL MODE	WET SCRUBBING	
PROCESS TYPE	CATALYTIC OXIDATION	
SYSTEM SUPPLIER	MONSANTO ENVIRO CHEM SYSTEMS	
DEVELOPMENT LEVEL	DEMONSTRATION	
NEW/RETROFIT	RETROFIT	
UNIT DESIGN PARTICLE REMOVAL EFFICIENCY - %	99.90	

ILLINOIS POWER COMPANY: WOOD RIVER 4 (CONT.)

UNIT DESIGN SO2 REMOVAL EFFICIENCY - %	85.00
ENERGY CONSUMPTION - %	.0
CURRENT STATUS	8
TERMINATION	0/74
COMMERCIAL START-UP	10/72
INITIAL START-UP	9/72
CONTRACT AWARDED	6/70

** DESIGN AND OPERATING PARAMETERS

** QUENCHER/PRESATURATOR

CONSTRUCTION MATERIAL GENERIC TYPE	NR
CONSTRUCTION MATERIAL SPECIFIC TYPE	NR

** ABSORBER

NUMBER	1	
GENERIC TYPE	PACKED TOWER	
SPECIFIC TYPE	NR	
TRADE NAME/COMMON TYPE	NR	
DIMENSIONS - FT	30.0 DIA X 65.0	
SHELL GENERIC MATERIAL	CARBON STEEL	
SHELL SPECIFIC MATERIAL	AISI 1110	
SHELL MATERIAL TRADE NAME/COMMON TYPE	N/A	
LINER GENERIC MATERIAL	NR	
LINER SPECIFIC MATERIAL	NR	
LINER MATERIAL TRADE NAME/COMMON TYPE	NR	
NUMBER OF CONTACTING ZONES	8	
DISTANCE BETWEEN GAS CONTACTING ZONES - CM	30.5	(12.0IN)
GAS-SIDE PRESSURE DROP - KPA	1.0	(4.0 IN-H2O)
INLET GAS TEMPERATURE - C	454.4	(850 F)
SO2 REMOVAL EFFICIENCY - %	85.0	

** ABSORBER

NUMBER	1	
GENERIC TYPE	PACKED TOWER	
SPECIFIC TYPE	NR	
TRADE NAME/COMMON TYPE	NR	
SHELL GENERIC MATERIAL	CARBON STEEL	
SHELL SPECIFIC MATERIAL	AISI 1110	
SHELL MATERIAL TRADE NAME/COMMON TYPE	N/A	
LINER GENERIC MATERIAL	INORGANIC	
LINER SPECIFIC MATERIAL	PREFIRED BRICK/SHAPES	
LINER MATERIAL TRADE NAME/COMMON TYPE	ACID-RESISTANT BRICK (LOW H2O ABSORPTION)	
INLET GAS TEMPERATURE - C	121.1	(250 F)

** MIST ELIMINATOR

PRE-MIST ELIMINATOR/MIST ELIMINATOR	PRIMARY COLLECTOR	
NUMBER PER SYSTEM	1	
GENERIC TYPE	IMPINGEMENT	
SPECIFIC TYPE	MESH	
TRADE NAME/COMMON TYPE	KNITTED WIRE MESH PAD	
PRESSURE DROP - KPA	4.5	(18.0 IN-H2O)
CONSTRUCTION MATERIAL GENERIC TYPE	HIGH ALLOY	
CONSTRUCTION MATERIAL SPECIFIC TYPE	NR	
WASH FREQUENCY	INTERMITTENT	

** REHEATER

NUMBER	1	
GENERIC TYPE	IN-LINE	
SPECIFIC TYPE	NR	
TRADE NAME/COMMON TYPE	NR	
PERCENT GAS BYPASSED - AVG	14.5	
TEMPERATURE INCREASE - C	247.8	(446 F)
INLET FLUE GAS TEMPERATURE - C	176.7	(350 F)
CONSTRUCTION MATERIAL GENERIC TYPE	NR	
CONSTRUCTION MATERIAL SPECIFIC TYPE	NR	

** FANS

NUMBER	1
APPLICATION	INDUCED DRAFT

ILLINOIS POWER COMPANY: WOOD RIVER 4 (CONT.)

** FANS

CONSTRUCTION MATERIAL GENERIC TYPE	STAINLESS STEEL

** DAMPERS

FUNCTION	NR
GENERIC TYPE	NR
SPECIFIC TYPE	NR
CONSTRUCTION MATERIAL GENERIC TYPE	NR
CONSTRUCTION MATERIAL SPECIFIC TYPE	NR
LINER GENERIC MATERIAL TYPE	NR
LINER SPECIFIC MATERIAL TYPE	NR

** DUCTWORK

SHELL GENERIC MATERIAL TYPE	STAINLESS STEEL
SHELL SPECIFIC MATERIAL TYPE	NR
LINER GENERIC MATERIAL TYPE	NONE
LINER SPECIFIC MATERIAL TYPE	N/A

** REAGENT PREPARATION EQUIPMENT

FUNCTION	N/A
DEVICE	N/A
DEVICE TYPE	N/A

** TANKS

SERVICE	NUMBER
PRODUCT ACID	2

** PUMPS

SERVICE	NUMBER
ACID RECIRCULATION	****
PRODUCT ACID	****

** SOLIDS CONCENTRATING/DEWATERING

DEVICE	NR
NUMBER	0

*** SLUDGE

** TREATMENT

METHOD	N/A
DEVICE	N/A
PROPRIETARY PROCESS	N/A

** DISPOSAL

NATURE	N/A
TYPE	NONE
SITE TREATMENT	NR

** PROCESS CONTROL AND INSTRUMENTATION

CHEMICAL PARAMETERS	TEMPERATURE, ASH LOADINGS, ACID CONCENTRATION

PERFORMANCE DATA

PERIOD	MODULE	AVAILABILITY	OPERABILITY	RELIABILITY	UTILIZATION	% REMOVAL SO2	% REMOVAL PART.	PER HOURS	BOILER HOURS	FGD HOURS	CAP. FACTOR
9/72	SYSTEM				33.9			720		244	

** PROBLEMS/SOLUTIONS/COMMENTS

THE EMISSION CONTROL EQUIPMENT AT THE WOOD RIVER SITE INCLUDED MECHANICAL COLLECTOPS, A HIGH EFFICIENCY ESP, AND A MONSANTO CATALYTIC OXIDATION (CATOX) FGD SYSTEM FOR THE CONTROL OF PARTICLE MATTER AND SULFUR DIOXIDE. FOLLOWING PASSAGE THROUGH THE PARTICLE MATTER REMOVAL SYSTEM, THE FLUE GAS

PERIOD	MODULE	AVAILABILITY	OPERABILITY	RELIABILITY	UTILIZATION	% REMOVAL SO2	% REMOVAL PART.	PER HOURS	BOILER HOURS	FGD HOURS	CAP. FACTOR

PERFORMANCE DATA

ENTERED THE SCRUBBING SYSTEM AND WAS HEATED TO A TEMPERATURE OF 850F AND THEN PASSED THROUGH A VANADIUM PENTOXIDE FIXED-BED CATALYTIC CONVERTER, WHERE THE SULFUR DIOXIDE WAS OXIDIZED TO SULFUR TRIOXIDE. THE GAS THEN FLOWED THROUGH AN ACID ABSORPTION TOWER, WHERE THE SULFUR TRIOXIDE IN THE GAS WAS CONVERTED TO SULFURIC ACID. AN ACID MIST ELIMINATOR ENSURED REMOVAL OF ENTRAINED ACID MIST FROM THE GAS STREAM. THE CLEANED GAS WAS DISCHARGED TO THE STACK AND THE PRODUCT ACID WAS COOLED AND STORED IN TANKS.

10/72	SYSTEM				23.9			744		178	

** PROBLEMS/SOLUTIONS/COMMENTS

THE WOOD RIVER SYSTEM WAS STARTED-UP IN SEPTEMBER 1972 BUT WAS SHUTDOWN ALMOST IMMEDIATELY (IN OCTOBER) TO CONVERT THE BURNERS TO OIL FIRING.

7/73	SYSTEM				21.2			744		158	

** PROBLEMS/SOLUTIONS/COMMENTS

IN JUNE 1973 THE CONVERSION TO OIL FIRING WAS COMPLETED AND A SUCCESSFUL PERFORMANCE TEST WAS MADE. A CATALYST PLUGGING HAZARD CAUSED THE SYSTEM TO SHUTDOWN AGAIN TO INSTALL AN EXTERNAL BURNER SYSTEM.

IN APRIL 1974 THE INSTALLATION OF THE EXTERNAL BURNERS WAS COMPLETED. VARIOUS OTHER PROBLEMS OCCURRED, WITH THE RESULT THAT ONLY 657 HOURS OF OPERATING TIME WAS LOGGED IN TWO YEARS.

SEVERAL OTHER MAJOR PROBLEM AREAS ENCOUNTERED DURING THE INTERMITTENT OPERATION OF THIS REGENERABLE SYSTEM INCLUDED: FROZEN DAMPERS ON REHEAT BURNERS, CRACKS IN THE TEFLON LINER ON THE ACID PUMP'S DISCHARGE HEADER CRACKS IN THE REHEAT DUCTING, FALL OF REFRACTORY BRICKS FROM THE REHEATER BURNER DOME, AND NEED FOR REINFORCEMENT OF THE STRUCTURE SUPPORTING THE HIGH TEMPERATURE FLUEGAS DUCT TO THE CATALYTIC CONVERTER.

SECTION 16
DESIGN AND PERFORMANCE DATA FOR DISCONTINUED DOMESTIC FGD SYSTEMS

COMPANY NAME	KEY WEST UTILITY BOARD	
PLANT NAME	STOCK ISLAND	
UNIT NUMBER	1	
CITY	KEY WEST	
STATE	FLORIDA	
REGULATORY CLASSIFICATION	E	
PARTICULATE EMISSION LIMITATION - NG/J	******	(****** LB/MMBTU)
SO2 EMISSION LIMITATION - NG/J	473.	(1.100 LB/MMBTU)
NOX EMISSION LIMITATION - NG/J	******	(****** LB/MMBTU)
NET PLANT GENERATING CAPACITY - MW	42	
GROSS UNIT GENERATING CAPACITY - MW	42	
NET UNIT GENERATING CAPACITY W/FGD - MW	37	
NET UNIT GENERATING CAPACITY WO/FGD - MW	*****	
EQUIVALENT SCRUBBED CAPACITY - MW	37	
** UNIT DATA - BOILER AND STACK		
BOILER SUPPLIER	ERIE CITY	
BOILER TYPE	OIL FIRED	
BOILER SERVICE LOAD	BASE	
DESIGN BOILER FLUE GAS FLOW - CU.M/S	********	(******* ACFM)
BOILER FLUE GAS TEMPERATURE - C	*******	(**** F)
STACK HEIGHT - M	34.	(110 FT)
STACK SHELL	GUNITE	
STACK TOP DIAMETER - M	*******	(***** FT)
** FUEL DATA		
FUEL TYPE	OIL	
FUEL GRADE	NO. 6	
AVERAGE HEAT CONTENT - J/G	******	(****** BTU/LB)
RANGE HEAT CONTENT - BTU/LB		******
AVERAGE ASH CONTENT - %	.04	
RANGE ASH CONTENT - %	******	
AVERAGE MOISTURE CONTENT - %	********	
RANGE MOISTURE CONTENT - %	******	
AVERAGE SULFUR CONTENT - %	2.01	
RANGE SULFUR CONTENT - %	2.0-3.0	
AVERAGE CHLORIDE CONTENT - %	********	
RANGE CHLORIDE CONTENT - %	******	
*** PARTICLE CONTROL		
** MECHANICAL COLLECTOR		
NUMBER	1	
PRESSURE DROP - KPA	.6	(3. IN-H2O)
** FABRIC FILTER		
NUMBER	0	
TYPE	NONE	
** ESP		
NUMBER	0	
TYPE	NONE	
** PARTICLE SCRUBBER		
GENERIC TYPE	NONE	
SPECIFIC TYPE	N/A	
TRADE NAME/COMMON NAME	N/A	
GAS CONTACTING DEVICE TYPE	N/A	
*** FGD SYSTEM		
** GENERAL DATA		
SALEABLE PRODUCT/THROWAWAY PRODUCT	THROWAWAY PRODUCT	
SO2 REMOVAL MODE	WET SCRUBBING	
PROCESS TYPE	LIMESTONE	
SYSTEM SUPPLIER	ZURN AIR SYSTEM	
DEVELOPMENT LEVEL	DEMONSTRATION	
NEW/RETROFIT	NEW	
UNIT DESIGN PARTICLE REMOVAL EFFICIENCY - %	90.00	

EPA UTILITY FGD SURVEY: OCTOBER - DECEMBER 1981

KEY WEST UTILITY BOARD: STOCK ISLAND 1 (CONT.)

UNIT DESIGN SO2 REMOVAL EFFICIENCY - % 85.00

WARNING **UNNORMALIZED NUMBER(S) BEING EDITED FOR OUTPUT**

ENERGY CONSUMPTION - %	*******
CURRENT STATUS	8
TERMINATION	1/75
INITIAL START-UP	10/72

** DESIGN AND OPERATING PARAMETERS

** QUENCHER/PRESATURATOR

CONSTRUCTION MATERIAL GENERIC TYPE	NR
CONSTRUCTION MATERIAL SPECIFIC TYPE	NR

** ABSORBER

NUMBER	2	
GENERIC TYPE	VENTURI TOWER	
SPECIFIC TYPE	NR	
TRADE NAME/COMMON TYPE	NR	
SUPPLIER	ZURN AIR SYSTEMS	
SHELL GENERIC MATERIAL	STAINLESS STEEL	
SHELL SPECIFIC MATERIAL	AUSTENITIC	
SHELL MATERIAL TRADE NAME/COMMON TYPE	TYPE 304L	
LINER GENERIC MATERIAL	NONE	
LINER SPECIFIC MATERIAL	N/A	
LINER MATERIAL TRADE NAME/COMMON TYPE	N/A	
GAS CONTACTING DEVICE TYPE	SCRUBBING TUBE	
LIQUID RECIRCULATION RATE - LITER/S	25.	(400 GPM)
GAS-SIDE PRESSURE DROP - KPA	1.5	(6.0 IN-H2O)
INLET GAS FLOW - CU. M/S	58.04	(123000 ACFM)
INLET GAS TEMPERATURE - C	62.8	(145 F)

** MIST ELIMINATOR

PRE-MIST ELIMINATOR/MIST ELIMINATOR	PRIMARY COLLECTOR
GENERIC TYPE	IMPINGEMENT
SPECIFIC TYPE	CURVED DEFLECTOR PLATE
TRADE NAME/COMMON TYPE	GULL WING
CONSTRUCTION MATERIAL GENERIC TYPE	ORGANIC
CONSTRUCTION MATERIAL SPECIFIC TYPE	FIBER-REINFORCED POLYESTER

** REHEATER

NUMBER	0
GENERIC TYPE	NONE
SPECIFIC TYPE	N/A
TRADE NAME/COMMON TYPE	N/A
CONSTRUCTION MATERIAL GENERIC TYPE	NONE
CONSTRUCTION MATERIAL SPECIFIC TYPE	N/A

** FANS

NUMBER	1
APPLICATION	INDUCED DRAFT

** DAMPERS

FUNCTION	NR
GENERIC TYPE	NR
SPECIFIC TYPE	NR
CONSTRUCTION MATERIAL GENERIC TYPE	NR
CONSTRUCTION MATERIAL SPECIFIC TYPE	NR
LINER GENERIC MATERIAL TYPE	NR
LINER SPECIFIC MATERIAL TYPE	NR

** DUCTWORK

SHELL GENERIC MATERIAL TYPE	NR
SHELL SPECIFIC MATERIAL TYPE	NR
LINER GENERIC MATERIAL TYPE	NR
LINER SPECIFIC MATERIAL TYPE	NR

** REAGENT PREPARATION EQUIPMENT

FUNCTION	WET BALL MILL
DEVICE	NR
DEVICE TYPE	NR

KEY WEST UTILITY BOARD: STOCK ISLAND 1 (CONT.)

** SOLIDS CONCENTRATING/DEWATERING
DEVICE — NA

*** SLUDGE

** TREATMENT
METHOD — BLEED
DEVICE — N/A
PROPRIETARY PROCESS — N/A

** DISPOSAL
NATURE — FINAL
TYPE — POND
SITE TREATMENT — NONE

** PROCESS CONTROL AND INSTRUMENTATION
CHEMICAL PARAMETERS — TEMPERATURE, PARTICLE LOADING, PH

** WATER BALANCE
WATER LOOP TYPE — OPEN

PERFORMANCE DATA

PERIOD	MODULE	AVAILABILITY	OPERABILITY	RELIABILITY	UTILIZATION	% REMOVAL SO2	% REMOVAL PART.	PER HOURS	BOILER HOURS	FGD HOURS	CAP. FACTOR
8/73	SYSTEM		3.6					744			

** PROBLEMS/SOLUTIONS/COMMENTS

THE EMISSION CONTROL SYSTEM AT THE STOCK ISLAND PLANT CONSISTED OF A MULTIPLE TUBE MECHANICAL COLLECTOR INSTALLED UPSTREAM OF TWO SULFUR DIOXIDE WET SCRUBBERS. THIS DEMONSTRATION FACILITY EMPLOYED LIMESTONE IN A SEAWATER SOLUTION FOR THE REMOVAL OF SO2. THE LIMESTONE ABSORBENT WAS OBTAINED FROM CORAL DREDGED FROM THE OCEAN. THE CORAL CONSISTED PRIMARILY OF CACO3 WITH LITTLE OR NO MGCO3. THE CORAL WAS GROUND TO A FINE POWDER IN A HAMMERMILL CRUSHER TO 90% MINUS 325 MESH AND SLURRIED IN SEAWATER.

THE SCRUBBING SYSTEM WAS SCHEDULED TO START UP IN JULY 1972, BUT DID NOT OPERATE UNTIL AUGUST 1973. DURING THE INTERIM, THE PRIMARY CRUSHING SYSTEM BECAME FROZEN BECAUSE OF SALT AIR CORROSION TAKING PLACE FROM DISUSE.

9/73	SYSTEM		.0					720			
10/73	SYSTEM		4.6					744			
11/73	SYSTEM		5.8					720			
12/73	SYSTEM		9.7					744			

** PROBLEMS/SOLUTIONS/COMMENTS

FROM STARTUP IN AUGUST 1973 UNTIL DECEMBER 10, 1973 THE LONGEST SCRUBBER RUN WAS FIVE DAYS; ASIDE FROM THAT, THE SCRUBBER WAS UP AND DOWN ONE DAY AT A TIME FOR SHAKEDOWN TESTING.

ON DECEMBER 12 A HIGH PRESSURE DROP (15 IN. H2O) CAUSED THE SCRUBBER TO SHUTDOWN.

A CHANGE IN THE BOILER LOAD, PROBLEMS WITH THE GRID, AND A HIGH PRESSURE DROP CAUSED THE SYSTEM TO SHUTDOWN ON DECEMBER 17. THE SYSTEM REMAINED DOWN THROUGH THE END OF THE MONTH SO THE SYSTEM COULD BE CLEANED.

1/74	SYSTEM		33.5					744			

EPA UTILITY FGD SURVEY: OCTOBER - DECEMBER 1981

KEY WEST UTILITY BOARD: STOCK ISLAND 1 (CONT.)

PERIOD	MODULE	AVAILABILITY	OPERABILITY	RELIABILITY	UTILIZATION	% REMOVAL SO2	% REMOVAL PART.	PER HOURS	BOILER HOURS	FGD HOURS	CAP. FACTOR
		PERFORMANCE DATA									

** PROBLEMS/SOLUTIONS/COMMENTS

ON JANUARY 2 THE 1A SCRUBBER EXPERIENCED PLUGGING CAUSING THE SYSTEM TO SHUTDOWN.

A HIGH PRESSURE DROP CAUSED SOME OUTAGE TIME IN JANUARY.

THE ENTIRE PLANT SHUTDOWN FOR SEVEN DAYS DURING JANUARY DUE TO A MAIN BEARING FAILURE.

THE HIGH PRESSURE ALARM AND THE SENSING DEVICE TRIPPED DUE TO SLUDGE BUILDUP. THIS KEPT THE SYSTEM OUT OF SERVICE FOR APPROXIMATELY FOUR DAYS.

ON JANUARY 22 THE SYSTEM WAS TAKEN OUT OF SERVICE FOR ABOUT THREE HOURS DUE TO A RUPTURED LINE ON ONE OF THE PUMPS AND A DECREASE IN THE PRESSURE DROP. CORRODED LOOSE NUTS AND BOLTS WERE FOUND IN THE LINE.

ON JANUARY 28 THE SYSTEM WAS SHUTDOWN FOR MODIFICATIONS WHICH INCLUDED; REPLACEMENT OF THE CYCLONE BY A BAGHOUSE AND REPLACEMENT OF THE VIBRATORY FEEDER BY A SCREW FEEDER.

2/74	SYSTEM					.0			672		
3/74	SYSTEM					.0			744		
4/74	SYSTEM					.0			720		
5/74	SYSTEM					.0			744		
6/74	SYSTEM					.0			720		
7/74	SYSTEM					.0			744		
8/74	SYSTEM					4.4			744		
9/74	SYSTEM					.0			720		
10/74	SYSTEM					37.5			744		
11/74	SYSTEM					43.1			720		
12/74	SYSTEM					16.1			744		
1/75	SYSTEM					.0			744		

** PROBLEMS/SOLUTIONS/COMMENTS

AFTER STARTUP IN AUGUST 1973, ENSUING OPERATION PROCEEDED ON AN INTERMITTENT BASIS. THE MAJOR PROBLEM AREAS ENCOUNTERED INCLUDED:

- +SEVERE CORROSION OF THE GAS QUENCH DUCT AND DAMPER SEALING FANS ON THE INLET AND OUTLET OF THE SCRUBBERS
- +PLUGGING AT THE BOTTOM OF THE SCRUBBER TUBES
- +LIQUID LEVEL CONTROL FAILURES IN THE SCRUBBER MODULES
- +POOR LIMESTONE UTILIZATION (APPROXIMATELY 20%)
- +INDUCED DRAFT FAN REPAIRS
- +REPLACEMENT OF INTERNAL STAINLESS STEEL PARTS WITH MONEL COMPONENTS
- +BOILER FOUNDATION AND BOILER TUBE PROBLEMS
- +LIMESTONE SUPPLY SHORTAGES

AS OF MARCH 1977 IT HAD NOT BEEN DECIDED WHETHER THERE WOULD BE FUTURE FGD OPERATIONS AT THE STOCK ISLAND PLANT. DURING OPERATION THE SCRUBBING SYSTEM LOGGED 1579 HOURS FOR A TOTAL OPERABILITY OF 8%.

SECTION 16
DESIGN AND PERFORMANCE DATA FOR DISCONTINUED DOMESTIC FGD SYSTEMS

COMPANY NAME	PHILADELPHIA ELECTRIC	
PLANT NAME	EDDYSTONE	
UNIT NUMBER	1A	
CITY	EDDYSTONE	
STATE	PENNSYLVANIA	
REGULATORY CLASSIFICATION	D	
PARTICULATE EMISSION LIMITATION - NG/J	******	(****** LB/MMBTU)
SO2 EMISSION LIMITATION - NG/J	******	(****** LB/MMBTU)
NOX EMISSION LIMITATION - NG/J	******	(****** LB/MMBTU)
NET PLANT GENERATING CAPACITY - MW	1395	
GROSS UNIT GENERATING CAPACITY - MW	120	
NET UNIT GENERATING CAPACITY W/FGD - MW	120	
NET UNIT GENERATING CAPACITY WO/FGD - MW	*****	
EQUIVALENT SCRUBBED CAPACITY - MW	120	
** UNIT DATA - BOILER AND STACK		
BOILER SUPPLIER	COMBUSTION ENGINEERING	
BOILER TYPE	******	
BOILER SERVICE LOAD	BASE	
DESIGN BOILER FLUE GAS FLOW - CU.M/S	437.45	(927000 ACFM)
BOILER FLUE GAS TEMPERATURE - C	157.2	(315 F)
STACK HEIGHT - M	76.	(249 FT)
STACK SHELL	CONCRETE	
STACK TOP DIAMETER - M	5.6	(18.5 FT)
** FUEL DATA		
FUEL TYPE	COAL	
FUEL GRADE	BITUMINOUS	
AVERAGE HEAT CONTENT - J/G	31634.	(13600 BTU/LB)
RANGE HEAT CONTENT - BTU/LB		******
AVERAGE ASH CONTENT - %	9.40	
RANGE ASH CONTENT - %	******	
AVERAGE MOISTURE CONTENT - %	5.90	
RANGE MOISTURE CONTENT - %	******	
AVERAGE SULFUR CONTENT - %	2.60	
RANGE SULFUR CONTENT - %	******	
AVERAGE CHLORIDE CONTENT - %	********	
RANGE CHLORIDE CONTENT - %	******	
*** PARTICLE CONTROL		
** MECHANICAL COLLECTOR		
NUMBER	1	
** ESP		
NUMBER	1	
** PARTICLE SCRUBBER		
NUMBER	2	
INITIAL START-UP DATE	9/75	
GENERIC TYPE	VENTURI TOWER	
SPECIFIC TYPE	VARIABLE-THROAT/VERTICALLY-ADJUSTABLE ROD DECKS	
TRADE NAME/COMMON NAME	ROD SCRUBBER	
SUPPLIER	ENVIRONEERING	
DIMENSIONS - FT	14.0 X 25.0 X 53.0	
SHELL GENERIC MATERIAL	STAINLESS STEEL	
SHELL SPECIFIC MATERIAL	AUSTENITIC	
LINER GENERIC MATERIAL	NONE	
LINER SPECIFIC MATERIAL	N/A	
GAS CONTACTING DEVICE TYPE	NONE	
NUMBER OF CONTACTING ZONES	1	
L/G RATIO - LITER/CU.M	.6	(4.8 GAL/1000ACF)
PRESSURE DROP - KPA	.0	(.1 IN-H2O)
INLET GAS FLOW RATE - CU.M/S	145.8	(309000 ACFM)
INLET GAS TEMPERATURE - C	157.2	(315 F)
** PARTICLE SCRUBBER		
NUMBER	1	
INITIAL START-UP DATE	9/75	

PHILADELPHIA ELECTRIC: EDDYSTONE 1A (CONT.)

GENERIC TYP	VENTURI TOWER	
SPECIFIC TYPE	VARIABLE-THROAT/ADJUSTABLE DRUM	
TRADE NAME/COMMON NAME	RADIAL FLOW VENTURI	
SUPPLIER	PEABODY-LURGI	
DIMENSIONS - FT	14.0 X 25.0 X 53.0	
SHELL GENERIC MATERIAL	STAINLESS STEEL	
SHELL SPECIFIC MATERIAL	AUSTENITIC	
LINER GENERIC MATERIAL	NONE	
LINER SPECIFIC MATERIAL	N/A	
GAS CONTACTING DEVICE TYPE	NONE	
NUMBER OF CONTACTING ZONES	1	
L/G RATIO - LITER/CU.M	.6	(4.8 GAL/1000ACF)
PRESSURE DROP - KPA	.0	(.1 IN-H2O)
INLET GAS FLOW RATE - CU.M/S	145.8	(309000 ACFM)
INLET GAS TEMPERATURE - C	157.2	(315 F)

*** FGD SYSTEM

** GENERAL DATA

SALEABLE PRODUCT/THROWAWAY PRODUCT	SALEABLE PRODUCT
SO2 REMOVAL MODE	WET SCRUBBING
PROCESS TYPE	MAGNESIUM OXIDE
PROCESS ADDITIVES	NONE
SYSTEM SUPPLIER	UNITED ENGINEERS
A-E FIRM	UNITED ENGINEERS & CONSTRUCTORS
DEVELOPMENT LEVEL	DEMONSTRATION
NEW/RETROFIT	RETROFIT
UNIT DESIGN PARTICLE REMOVAL EFFICIENCY - %	99.00
UNIT DESIGN SO2 REMOVAL EFFICIENCY - %	90.00
ENERGY CONSUMPTION - %	-.0
CURRENT STATUS	8
TERMINATION	12/79
COMMERCIAL START-UP	9/75
INITIAL START-UP	9/75

** DESIGN AND OPERATING PARAMETERS

** QUENCHER/PRESATURATOR

CONSTRUCTION MATERIAL GENERIC TYPE	NR
CONSTRUCTION MATERIAL SPECIFIC TYPE	NR

** ABSORBER

NUMBER	1	
GENERIC TYPE	PACKED TOWER	
SPECIFIC TYPE	GRID PACKING	
TRADE NAME/COMMON TYPE	N/A	
SUPPLIER	ENVIRONEERING, RILEY STOKER	
DIMENSIONS - FT	14.0 X 25.0 53.0	
SHELL GENERIC MATERIAL	CARBON STEEL	
SHELL SPECIFIC MATERIAL	HIGH STRENGTH LOW ALLOY	
SHELL MATERIAL TRADE NAME/COMMON TYPE	COR-TEN	
LINER GENERIC MATERIAL	ORGANIC	
LINER SPECIFIC MATERIAL	EPOXY	
LINER MATERIAL TRADE NAME/COMMON TYPE	NR	
GAS CONTACTING DEVICE TYPE	ROD DECKS	
NUMBER OF CONTACTING ZONES	2	
LIQUID RECIRCULATION RATE - LITER/S	843.	(13384 GPM)
L/G RATIO - L/CU.M	6.5	(48.5 GAL/1000 ACF)
GAS-SIDE PRESSURE DROP - KPA	2.5	(10.0 IN-H2O)
INLET GAS FLOW - CU. M/S	126.47	(268000 ACFM)
INLET GAS TEMPERATURE - C	51.7	(125 F)

** MIST ELIMINATOR

PPE-MIST ELIMINATOR/MIST ELIMINATOR	PRIMARY COLLECTOR	
GENERIC TYPE	IMPINGEMENT	
SPECIFIC TYPE	BAFFLE	
TRADE NAME/COMMON TYPE	CLOSED VANE	
CONFIGURATION	VERTICAL	
NUMBER OF STAGES	2	
NUMBER OF PASSES PER STAGE	2	
FREEBOARD DISTANCE - M	2.44	(8.0 FT)

PHILADELPHIA ELECTRIC: EDDYSTONE 1A (CONT.)

CONSTRUCTION MATERIAL GENERIC TYPE	ORGANIC
CONSTRUCTION MATERIAL SPECIFIC TYPE	FIBER-REINFORCED POLYESTER
WASH WATER SOURCE	FRESH
WASH FREQUENCY	INTERMITTENT
** REHEATER	
NUMBER	1
GENERIC TYPE	DIRECT COMBUSTION
SPECIFIC TYPE	IN-LINE BURNER
TRADE NAME/COMMON TYPE	OIL
TEMPERATURE INCREASE - C	57.2 (103 F)
INLET FLUE GAS TEMPERATURE - C	51.7 (125 F)
CONSTRUCTION MATERIAL GENERIC TYPE	NR
CONSTRUCTION MATERIAL SPECIFIC TYPE	NR
** FANS	
NUMBER	3
SUPPLIER	BUFFALO FORGE
FUNCTION	BALANCED DRAFT
APPLICATION	INDUCED DRAFT
SERVICE	DRY
FLUE GAS FLOW RATE - CU.M/S	126.47 (268000 ACFM)
FLUE GAS TEMPERATURE - C	107.2 (225 F)
** DAMPERS	
FUNCTION	NR
GENERIC TYPE	NR
SPECIFIC TYPE	NR
CONSTRUCTION MATERIAL GENERIC TYPE	NR
CONSTRUCTION MATERIAL SPECIFIC TYPE	NR
LINER GENERIC MATERIAL TYPE	NR
LINER SPECIFIC MATERIAL TYPE	NR
** DUCTWORK	
LOCATION	SCRUBBER INLET
SHELL GENERIC MATERIAL TYPE	STAINLESS STEEL
SHELL SPECIFIC MATERIAL TYPE	AUSTENITIC
LINER GENERIC MATERIAL TYPE	NONE
LINER SPECIFIC MATERIAL TYPE	N/A
** DUCTWORK	
LOCATION	SCRUBBER OUTLET
SHELL GENERIC MATERIAL TYPE	STAINLESS STEEL
SHELL SPECIFIC MATERIAL TYPE	AUSTENITIC
LINER GENERIC MATERIAL TYPE	NONE
LINER SPECIFIC MATERIAL TYPE	N/A
** REAGENT PREPARATION EQUIPMENT	
FUNCTION	SLAKER
DEVICE	NR
DEVICE TYPE	NR
** PUMPS	
SERVICE	NUMBER
-------	------
ABSORBER RECIRCULATION	2
** SOLIDS CONCENTRATING/DEWATERING	
DEVICE	THICKENER
NUMBER	1
DIMENSIONS - FT	40.0 DIA
OUTLET STREAM CHARACTERISTICS	25% SOLIDS
** SOLIDS CONCENTRATING/DEWATERING	
DEVICE	CENTRIFUGE
NUMBER	1

*** SLUDGE

PHILADELPHIA ELECTRIC: EDDYSTONE 1A (CONT.)

** TREATMENT

METHOD	DEWATERED
DEVICE	N/A
PROPRIETARY PROCESS	N/A

** DISPOSAL

NATURE	N/A
TYPE	NONE
SITE TREATMENT	N/A

** WATER BALANCE

WATER LOOP TYPE	OPEN	
MAKEUP WATER ADDITION - LITERS/S	8.3	(132 GPM)

** FGD SPARE CAPACITY INDICES

ABSORBER - %	.0

** FGD SPARE COMPONENT INDICES

ABSORBER	.0

PERFORMANCE DATA

PERIOD	MODULE	AVAILABILITY	OPERABILITY	RELIABILITY	UTILIZATION	% REMOVAL SO2	% REMOVAL PART.	PER HOURS	BOILER HOURS	FGD HOURS	CAP. FACTOR
11/74	SYSTEM							720			

** PROBLEMS/SOLUTIONS/COMMENTS

THE SCRUBBING SYSTEM AT THIS PLANT CONSISTS OF THREE PARALLEL SCRUBBING TRAINS INCORPORATING THREE WET PARTICULATE SCRUBBERS AND ONE SO2 ABSORBER MODULE. THERE WAS A BRIEF OPERATING PERIOD ON THE PARTICULATE SCRUBBERS FROM MID-NOVEMBER 1974 TO MARCH 1975. PROBLEMS ENCOUNTERED CENTERED AROUND THE SCRUBBER BOOSTER FANS AND THE FLUE GAS AND LIQUID CONDITIONS. THE B-SIDE BOOSTER FAN DEVELOPED HIGH SHAFT VIBRATION WHEN STARTED FOR THE FIRST TIME. THIS PROBLEM WAS DESIGN-RELATED, INVOLVING AN EXCESSIVE CLEARANCE AREA BETWEEN THE SHAFT AND WHEELHUB. ALSO, EXTENSIVE CORROSION DEVELOPED IN THE C-SIDE PARTICLE SCRUBBER INTERNALS. THIS WAS CAUSED BY LOW SCRUBBING SOLUTION PH LEVELS AND CHLORIDE LEVELS AS HIGH AS 2000 PPM. THESE CONDITIONS COUPLED WITH THE THERMAL SHOCK OF A HOT START PROCEDURE CAUSED THE CORROSION. THIS PROBLEM WAS AMELIORATED BY CAUSTIC ADDITION, HIGHER BLOWDOWN AND EMPLOYING A COLD START PROCEDURE. AT APPROXIMATELY THIS TIME, A CHECKOUT OF THE SO2 SYSTEM WAS CONDUCTED. BLISTERING AND PEELING OF THE POLYURETHANE COATINGS WERE DETECTED AND CORRECTED BY RECOATING WITH FLAKEGLASS.

12/74	SYSTEM							744			
1/75	SYSTEM							744			
2/75	SYSTEM							672			
3/75	SYSTEM							744			
4/75	SYSTEM							720			
5/75	SYSTEM							744			
6/75	SYSTEM							720			
7/75	SYSTEM							744			

** PROBLEMS/SOLUTIONS/COMMENTS

THE C-SIDE PARTICULATE SCRUBBER RESTARTED ON JULY 23, 1975. THE TWO OTHER TRAINS, B-SIDE AND A-SIDE, WERE PUT INTO OPERATION ON AUGUST 15 AND OCTOBER 2, RESPECTIVELY. THE SO2 ABSORBER MODULE IN THE C-SIDE SCRUBBING TRAIN WAS INITIALLY PLACED IN SERVICE OCTOBER 2, 1975. THE OLIN CHEMICAL

PHILADELPHIA ELECTRIC: EDDYSTONE 1A (CONT.)

PERIOD	MODULE	AVAILABILITY	OPERABILITY	RELIABILITY	UTILIZATION	% REMOVAL SO2	% REMOVAL PART.	PER HOURS	BOILER HOURS	FGD HOURS	CAP. FACTOR

PERFORMANCE DATA

MSO REGENERATION FACILITY FIRST PROCESSED MAGNESIUM SULFITE FROM THE EDDYSTONE SCRUBBER ON OCTOBER 28, 1975. THE C-SIDE PARTICULATE SCRUBBER OPERATED A TOTAL OF 2831 HOURS THROUGH JANUARY 31, 1976, FOR AN OPERABILITY OF 70%. THE B-SIDE TRAIN HAS OPERATED A TOTAL OF 1933 HOURS THROUGH JANUARY 31, 1976 FOR AN OPERABILITY OF 55%. THE A-SIDE TRAIN OPERATED A TOTAL OF 626 HOURS THROUGH JANUARY 31, 1976, FOR AN OPERABILITY OF 24%. THE C-SIDE SO2 ABSORBER WAS IN SERVICE A TOTAL OF 556 HOURS THROUGH DECEMBER 31, 1975, WITH AN OPERABILITY OF 33% SINCE START UP. PROBLEMS ENCOUNTERED IN THE OPERATION OF THE THREE SCRUBBING TRAINS INCLUDED UNDER-DESIGNED RECIRCULATION PUMPS, MALFUNCTION OF THE FLUE GAS BY-PASS DAMPER DRIVE UNITS AND FAILURE OF THE DOUBLE-BRICK REFRACTORY LINING IN THE REHEAT COMBUSTION CHAMBER.

8/75	SYSTEM							744			
9/75	SYSTEM							720			
10/75	SYSTEM							744			
11/75	SYSTEM							720			
12/75	SYSTEM							744			

** PROBLEMS/SOLUTIONS/COMMENTS

OPERATION OF THE SO2 SCRUBBING SYSTEM AT EDDYSTONE WAS TEMPORARILY HALTED BECAUSE THE ACID PLANT REGENERATION FACILITY AT THE OLIN CHEMICAL SULFURIC ACID PLANT IN PAULSBORO, NEW JERSEY PERMANENTLY CEASED OPERATIONS. THE UTILITY WAS INVESTIGATING ALTERNATIVE REGENERATION SITES. A MINIMUM PERIOD OF SIX MONTHS WAS REQUIRED FOR RELOCATION ONCE A CHOICE WAS MADE. THE UTILITY ANNOUNCED PLANS FOR RELOCATION OF THE REGENERATION FACILITY AT THE ESSEX CHEMICAL PLANT IN NEWARK, NEW JERSEY.

THE PARTICULATE SCRUBBERS WERE CONTINUING TO OPERATE AND THESE UNITS WEREARE CONTINUING TO EXPERIENCE PROBLEMS WITH THE FANS, REHEAT BURNERS, DAMPERS AND EXPANSION JOINTS.

1/76	SYSTEM							744			
2/76	SYSTEM							696			
3/76	SYSTEM							744			
4/76	SYSTEM							720			
5/76	SYSTEM							744			
6/76	SYSTEM							720			

** PROBLEMS/SOLUTIONS/COMMENTS

RESUMPTION OF SO2 SCRUBBING OPERATIONS WAS SCHEDULED FOR DECEMBER 1976. THE RELOCATION OF THE REGENERATION FACILITY WAS IN PROGRESS. THE PARTICULATE SCRUBBERS WERE OPERATIONAL. THE C-SIDE BOOSTER FAN DEVELOPED A MATERIALS FAILURE BETWEEN THE HUB AND SHAFT (IDENTICAL TO THE B-SIDE UNIT MENTIONED EARLIER).

7/76	SYSTEM							744			
8/76	SYSTEM							744			
9/76	SYSTEM							720			

PERIOD	MODULE	AVAILABILITY	OPERABILITY	RELIABILITY	UTILIZATION	% REMOVAL SO2	% REMOVAL PART.	PER HOURS	BOILER HOURS	FGD HOURS	CAP. FACTOR
		PERFORMANCE DATA									

** PROBLEMS/SOLUTIONS/COMMENTS

ALL THREE BOOSTER FANS DOWNSTREAM OF THE REHEATEPS DEVELOPED MATERIALS FAILURE BETWEEN THE HUB AND SHAFT (AS IDENTIFIED EARLIER FOR THE B-SIDE UNIT). THESE UNITS WERE RETURNED TO THE MANUFACTURER FOR MODIFICATIONS AND REPAIRS. ONE OF THE PARTICULATE SCRUBBERS WAS IN THE FLUE GAS STREAM. TO DATE, THE THREE WET PARTICULATE SCRUBBERS HAD ACHIEVED LITTLE SIMULTANEOUS SERVICE TIME.

10/76	SYSTEM							744			
11/76	SYSTEM							720			
12/76	SYSTEM							744			

** PROBLEMS/SOLUTIONS/COMMENTS

MGO SCRUBBING OPERATIONS WERE SCHEDULED TO RESTART IN MAY 1977. REGENERATION FACILITY RELOCATION WAS BEING COMPLETED, AND MODIFICATIONS TO THE ID BOOSTER FANS BEING EFFECTED CONSISTED OF CONVERSION FROM A SLIP FIT TO A SHRINK FIT. THESE MODIFICATIONS WERE EXPECTED TO ELIMINATE RECURRING VIBRATION PROBLEMS.

1/77	SYSTEM							744			
2/77	SYSTEM							672			
3/77	SYSTEM							744			

** PROBLEMS/SOLUTIONS/COMMENTS

THE MGO SCRUBBING SYSTEM AT EDDYSTONE 1A WAS STILL SCHEDULED FOR RESTART IN MAY 1977. THE START-UP OF THE NEW MAGNESIUM SULFITE REGENERATION FACILITY AT THE ESSEX CHEMICAL PLANT AT NEWARK, N.J. WAS ALSO SCHEDULED FOR MAY 1977. THE THREE PARALLEL VENTURI SCRUBBERS CONTROLLING PARTICULATE EMISSIONS ON EDDYSTONE 1 WENT BACK INTO SERVICE IN MARCH 1977.

4/77	SYSTEM							720			
5/77	SYSTEM							744		206	

** PROBLEMS/SOLUTIONS/COMMENTS

RESUMPTION OF MAGNESIUM OXIDE SCRUBBING OPERATIONS OCCURRED DURING THE REPORT PERIOD. THE UTILITY REPORTED THAT SO2 SCRUBBING OPERATIONS WEPE NOT CONTINUOUS THROUGHOUT THE PERIOD. THE ABSORBER WAS IN SERVICE APPROXIMATELY 206 HOURS DURING MAY. REGENERATION OPERATIONS AT THE ESSEX FACILITY WERE NOT CONDUCTED DURING THE PERIOD. PECO PLANNED TO INITIATE SO2 RECOVERY AND MAGOX REGENERATION OPEPATIONS DURING THE MONTH OF JUNE. THE SO2 MODULE CONTAINED TWO ABSORBER SECTIONS IN SERIES (EACH SECTION CONSISTING OF AN ADJUSTABLE ROD DECK WITH UNDERSPRAYS). ONLY ONE OF THE ABSORBER SECTIONS WAS BEING USED FOR SO2 REMOVAL. SO2 REMOVAL EFFICIENCY WAS NOT MEASURED. MAGNESIUM OXIDE LOSSES IN THE SYSTEM (ABSORPTION AND REGENERATION) WERE ESTIMATED AT 10%.

6/77	SYSTEM							720			
7/77	SYSTEM							744			

PHILADELPHIA ELECTRIC: EDDYSTONE 1A (CONT.)

PERIOD	MODULE	AVAILABILITY	OPERABILITY	RELIABILITY	UTILIZATION	% REMOVAL SO2	% REMOVAL PART.	PER HOURS	BOILER HOURS	FGD HOURS	CAP. FACTOR
		PERFORMANCE DATA									

** PROBLEMS/SOLUTIONS/COMMENTS

FAILURE OF MINOR ANCILLIARY EQUIPMENT CAUSED SOME SCRUBBER SHUTDOWNS. LATER, THE BOILER ITSELF WAS SHUT DOWN. OVER THIS PERIOD THE ROTARY VALVE ON THE MAG SULFITE DRIER DISCHARGE PLUGGED REPEATEDLY. ALSO THE BELTS ON THE AGITATOR OF THE MAG-OX PRESLAKER FAILED.

8/77	SYSTEM							744			
9/77	SYSTEM							720			

** PROBLEMS/SOLUTIONS/COMMENTS

THE ROTARY VALVE PROBLEM APPEARED TO BE SOLVED. CUMULATIVE OPERABILITY SINCE MAY WAS ESTIMATED TO BE ROUGHLY 33%. PECO REPORTED 131 HOURS OF CONTINUOUS OPERATION FOR THE SCRUBBER AND THICKENER CENTRIFUGE DRYING LOOP. DURING THE AUGUST-SEPTEMBER REPORT PERIOD CONTINUAL PROBLEMS WITH THE GLAND PACKING ON THE FGD SYSTEM CIRCULATION PUMPS (STUFFING BOX) WERE ENCOUNTERED. PECO CHANGED THE GLAND CONFIGURATION. THERE ALSO WAS A PROBLEM WITH HIGH SOLIDS FORMATION IN THE THICKENER.

10/77	SYSTEM					41.0		744			
11/77	SYSTEM					41.0		720			

** PROBLEMS/SOLUTIONS/COMMENTS

CUMULATIVE OPERABILITY FOR MAY THROUGH NOVEMBER 1977 WAS 39%. DURING THE OCTOBER-NOVEMBER PERIOD THE FGD SYSTEM ACHIEVED A 213 HOUR CONTINUOUS RUN. THIS WAS THE LONGEST CONTINUOUS RUN SINCE MAY 1977.

GLAND PACKING PROBLEMS PERSISTED AND MECHANICAL SEALS WERE BEING CONSIDERED AS POSSIBLE ALTERNATIVES. EVEN WITH HEAT TRACING THE SEAL WATER FROZE-UP CAUSING ROTAMETERS TO BURST. HIGH SOLIDS ACCUMULATION IN THE THICKENER WAS STILL A PROBLEM AREA.

12/77	SYSTEM					41.0		744			
1/78	SYSTEM							744		0	

** PROBLEMS/SOLUTIONS/COMMENTS

THE UNIT WAS SHUT DOWN DECEMBER 22 FOR A TURBINE OVERHAUL. DURING THE OUTAGE MAINTENANCE AND MINOR MODIFICATIONS WERE BEING MADE ON THE SCRUBBERS. THE UNIT WAS EXPECTED TO BE BACK ON LINE THE FIRST WEEK IN MARCH. THE CUMULATIVE OPERABILITY FACTOR FOR THE FOURTH QUARTER OF 1978 WAS 41%. DURING THIS PERIOD SOME OF THE HEAT TRACING FAILED AND OTHER PROBLEMS OCCURRED WHEN LINES FROZE AT THE ACID PLANT CAUSING THE FACILITY TO BE OPERATED INTERMITTENTLY. THE GLAND PACKING PROBLEMS HAD NOT BEEN SOLVED AND MECHANICAL SEALS WERE STILL BEING CONSIDERED.

THE UTILITY WAS STUDYING THE MAG-SULFIDE TO MAG-OXIDE RECOVERY EFFICIENCY.

2/78	SYSTEM					.0		672		0	
3/78	SYSTEM					.0		744		0	

** PROBLEMS/SOLUTIONS/COMMENTS

THE TURBINE OVERHAUL CONTINUED DURING THE FEBRUARY-MARCH PERIOD. DURING THE SHUTDOWN PERIOD IT WAS FOUND THAT SOME HIGH PRESSURE STEAM TUBES WERE CRACKED, SO UNIT MAINTENANCE TOOK LONGER THAN EXPECTED. SOME MINOR FGD SYSTEM MODIFICATIONS WERE INCORPORATED IN THE COURSE OF

PERIOD	MODULE	AVAILABILITY	OPERABILITY	RELIABILITY	UTILIZATION	% REMOVAL SO2	% REMOVAL PART.	PER HOURS	BOILER HOURS	FGD HOURS	CAP. FACTOR
			THE SHUTDOWN PERIOD. START UP WAS EXPECTED IN MID-APRIL 1978.								
4/78	SYSTEM				.0			720		0	
5/78	SYSTEM				.0			744		0	
	** PROBLEMS/SOLUTIONS/COMMENTS										
			THE UNIT CAME BACK ON LINE JUNE 1 AFTER AN EXTENSIVE SYSTEM MODIFICATION OUTAGE WHICH BEGAN DECEMBER 22. THE UNIT WAS EXPECTED BACK ON LINE IN MID-APRIL, BUT THERE WAS A PROBLEM WITH A SUPER PRESSURE STEAM TURBINE.								
6/78	SYSTEM		49.0					720			
7/78	SYSTEM		51.0					744			
	** PROBLEMS/SOLUTIONS/COMMENTS										
			DURING JUNE THE FGD SYSTEM ACHIEVED A 49% OPERABILITY. OPERABILITY FOR JULY WAS 51%. PROBLEMS OCCURRED IN LATE JUNE WITH THE MGSO3 SLURRY CIRCULATION PUMP WHEN THE UTILITY DISCOVERED THE RUBBER LINER WAS TORN AWAY. THERE WERE SOME PROBLEMS WITH THE MGO SECTION WHERE THE MGO MIXES WITH THE SYSTEM LIQUOR. FIRE BRICK WAS REMOVED FROM THE FLUID BED REACTOR CHAMBER TO REPLACE THE ACID BARRIER PLATES WHICH WERE FAILING. THE FIRE BRICK WAS THEN REPLACED. THE SLOW PIECE BY PIECE PROCEDURE WAS TIME CONSUMING AND ACCOUNTED FOR MOST OF THE REGENERABLE FACILTY DOWN TIME (MOST OF JUNE AND JULY). MAJOR PROBLEMS WERE SOLVED ON THE REGENERATIVE FACILITY OVER THE PERIOD RESULTING IN IMPROVED AVAILABILITY OF THE FACILITY.								
8/78	SYSTEM		38.0	32.0				744	631	240	
9/78	SYSTEM		78.0	56.0				720	516	402	
	** PROBLEMS/SOLUTIONS/COMMENTS										
			DURING THE MONTH OF AUGUST SCRUBBER CIRCULATING PIPING PROBLEMS WERE ENCOUNTERED. A BUTTERFLY CONTROL VALVE WAS NOT FULLY OPEN AND A SECTION OF PIPE DOWNSTREAM AT A 90 DEGREE BEND EPODED AWAY. TO CORRECT THE PROBLEM THE BUTTERFLY VALVE WAS TAKEN OUT AND REPLACED WITH A RESTRICTION ORIFACE. THE CIRCULATION PUMPING RATE WAS ALSO REDUCED.								
			THE UTILITY REPORTED THAT NO MAJOR PROBLEMS WERE ENCOUNTERED DURING THE MONTH OF SEPTEMBER. CERTAIN MECHANICAL PROBLEMS WERE RESOLVED WHICH RESULTED IN AN IMPROVEMENT IN THE OPERABILITY FIGURE.								
10/78	SYSTEM		23.0					744			
11/78	SYSTEM							720			
12/78	SYSTEM							744			
	** PROBLEMS/SOLUTIONS/COMMENTS										
			THE FGD SYSTEM WAS SHUT DOWN FOR AN APPRECIABLE TIME DURING THE LAST QUARTER OF 1978 DUE TO MODIFICATIONS TO THE MGO SLAKING EQUIPMENT.								
1/79	SYSTEM							744			
2/79	SYSTEM							672			
3/79	SYSTEM							744			
4/79	SYSTEM							720			

PHILADELPHIA ELECTRIC: EDDYSTONE 1A (CONT.)

PERIOD	MODULE	AVAILABILITY	OPERABILITY	RELIABILITY	UTILIZATION	% REMOVAL SO2	% REMOVAL PART.	PER HOURS	BOILER HOURS	FGD HOURS	CAP. FACTOR
		PERFORMANCE DATA									
5/79	SYSTEM							744			
6/79	SYSTEM							720			
7/79	SYSTEM							744			
8/79	SYSTEM							744			
9/79	SYSTEM							720			
10/79	SYSTEM							744			
11/79	SYSTEM							720			
12/79	SYSTEM							744			

** PROBLEMS/SOLUTIONS/COMMENTS

INFORMATION FOR THIS UNIT HAD NOT BEEN AVAILABLE SINCE OCTOBER 1978.

1/80	SYSTEM							744	0		
2/80	SYSTEM							696	0		
3/80	SYSTEM							744	0		

** PROBLEMS/SOLUTIONS/COMMENTS

THE BOILER AND TURBINE WERE DOWN DURING THE FIRST QUARTER 1980 FOR TURBINE MAINTENANCE.

OPERATION OF THIS PROTOTYPE MAGNESIUM OXIDE SYSTEM, WHICH TREATED ONE THIRD OF THE FLUE GAS FROM THE EDDYSTONE 1 BOILER, WAS TERMINATED. THE SO2 REMOVAL EQUIPMENT WILL BE REPLACED WITH A SIMILAR MAG-OX SYSTEM DESIGNED TO TREAT 100% OF THE BOILER FLUE GAS. THE EXPECTED START DATE OF THIS SYSTEM IS DECEMBER 1982. CURRENT REGULATIONS DO NOT REQUIRE CONTROL OF SO2 EMISSIONS UNTIL THE NEW SCRUBBER IS AVAILABLE FOR OPERATION.

SECTION 16
DESIGN AND PERFORMANCE DATA FOR DISCONTINUED DOMESTIC FGD SYSTEMS

COMPANY NAME	POTOMAC ELECTRIC POWER	
PLANT NAME	DICKERSON	
UNIT NUMBER	3A	
CITY	DICKERSON	
STATE	MARYLAND	
REGULATORY CLASSIFICATION	E	
PARTICULATE EMISSION LIMITATION - NG/J	******	(****** LB/MMBTU)
SO2 EMISSION LIMITATION - NG/J	688.	(1.600 LB/MMBTU)
NOX EMISSION LIMITATION - NG/J	******	(****** LB/MMBTU)
NET PLANT GENERATING CAPACITY - MW	548	
GROSS UNIT GENERATING CAPACITY - MW	190	
NET UNIT GENERATING CAPACITY W/FGD - MW	178	
NET UNIT GENERATING CAPACITY WO/FGD - MW	182	
EQUIVALENT SCRUBBED CAPACITY - MW	95	
** UNIT DATA - BOILER AND STACK		
BOILER SUPPLIER	COMBUSTION ENGINEERING	
BOILER TYPE	PULVERIZED COAL	
BOILER SERVICE LOAD	BASE	
DESIGN BOILER FLUE GAS FLOW - CU.M/S	278.42	(590000 ACFM)
BOILER FLUE GAS TEMPERATURE - C	126.1	(259 F)
STACK HEIGHT - M	122.	(400 FT)
STACK SHELL	CONCRETE	
STACK TOP DIAMETER - M	*******	(***** FT)
** FUEL DATA		
FUEL TYPE	COAL	
FUEL GRADE	BITUMINOUS	
AVERAGE HEAT CONTENT - J/G	27214.	(11700 BTU/LB)
RANGE HEAT CONTENT - BTU/LB		******
AVEPAGE ASH CONTENT - %	14.00	
RANGE ASH CONTENT - %	******	
AVERAGE MOISTURE CONTENT - %	********	
RANGE MOISTURE CONTENT - %	6.0-7.0	
AVERAGE SULFUR CONTENT - %	2.00	
RANGE SULFUR CONTENT - %	******	
AVERAGE CHLORIDE CONTENT - %	********	
RANGE CHLORIDE CONTENT - %	******	
*** PARTICLE CONTROL		
** MECHANICAL COLLECTOR		
NUMBER	0	
TYPE	NONE	
** FABRIC FILTER		
NUMBER	0	
TYPE	NONE	
** ESP		
NUMBER	1	
SUPPLIER	RESEARCH-COTTRELL	
PARTICLE REMOVAL EFFICENCY - %	97.5	
** PARTICLE SCRUBBER		
GENERIC TYPE	VENTURI TOWER	
SPECIFIC TYPE	VARIABLE-THROAT/TOP-ENTRY PLUMB BOB	
TRADE NAME/COMMON NAME	N/A	
GAS CONTACTING DEVICE TYPE	NONE	
*** FGD SYSTEM		
** GENERAL DATA		
SALEABLE PRODUCT/THROWAWAY PRODUCT	SALEABLE PRODUCT	
SO2 REMOVAL MODE	WET SCRUBBING	
PROCESS TYPE	MAGNESIUM OXIDE	
PROCESS ADDITIVES	NONE	
SYSTEM SUPPLIER	GE ENVIRONMENTAL SERVICES	
A-E FIRM	GE ENVIRONMENTAL SERVICES	

POTOMAC ELECTRIC POWER: DICKERSON 3A (CONT.)

DEVELOPMENT LEVEL	DEMONSTRATION
NEW/RETROFIT	RETROFIT
UNIT DESIGN PARTICLE REMOVAL EFFICIENCY - %	99.30
UNIT DESIGN SO2 REMOVAL EFFICIENCY - %	90.00
ENERGY CONSUMPTION - %	.0
CURRENT STATUS	8
TERMINATION	8/75
COMMERCIAL START-UP	7/74
INITIAL START-UP	9/73
CONTRACT AWARDED	7/71

** DESIGN AND OPERATING PARAMETERS

** QUENCHER/PRESATURATOR

CONSTRUCTION MATERIAL GENERIC TYPE	NR
CONSTRUCTION MATERIAL SPECIFIC TYPE	NR

** ABSORBER

NUMBER	1	
GENERIC TYPE	VENTURI TOWER	
SPECIFIC TYPE	VARIABLE-THROAT/TOP-ENTRY PLUMB BOB	
TRADE NAME/COMMON TYPE	N/A	
SUPPLIER	GE ENVIRONMENTAL SERVICES	
SHELL GENERIC MATERIAL	CARBON STEEL	
SHELL SPECIFIC MATERIAL	AISI 1110	
SHELL MATERIAL TRADE NAME/COMMON TYPE	N/A	
LINER GENERIC MATERIAL	ORGANIC	
LINER SPECIFIC MATERIAL	GLASS FLAKE-FILLED POLYESTER	
LINER MATERIAL TRADE NAME/COMMON TYPE	NR	
GAS CONTACTING DEVICE TYPE	NONE	
L/G RATIO - L/CU.M	5.3	(40.0 GAL/1000 ACF)
GAS-SIDE PRESSURE DROP - KPA	2.2	(9.0 IN-H2O)
SO2 REMOVAL EFFICIENCY - %	90.0	

** MIST ELIMINATOR

PRE-MIST ELIMINATOR/MIST ELIMINATOR	PRIMARY COLLECTOR	
NUMBER PER SYSTEM	2	
GENERIC TYPE	IMPINGEMENT	
SPECIFIC TYPE	BAFFLE	
TRADE NAME/COMMON TYPE	CLOSED VANE	
NUMBER OF STAGES	3	
NUMBER OF PASSES PER STAGE	2	
DISTANCE BETWEEN VANES - CM	5.1	(2.00 IN)
VANE ANGLES - DEGREES	45	
PRESSURE DROP - KPA	.2	(1.0 IN-H2O)
SUPERFICAL GAS VELOCITY - M/S	3.0	(10.0 FT/S)
CONSTRUCTION MATERIAL GENERIC TYPE	ORGANIC	
CONSTRUCTION MATERIAL SPECIFIC TYPE	FIBER-REINFORCED POLYESTER	

** REHEATER

NUMBER	0
GENERIC TYPE	NONE
SPECIFIC TYPE	N/A
TRADE NAME/COMMON TYPE	N/A
CONSTRUCTION MATERIAL GENERIC TYPE	NONE
CONSTRUCTION MATERIAL SPECIFIC TYPE	N/A

** FANS

NUMBER	1
FUNCTION	UNIT
SERVICE	WET
CONSTRUCTION MATERIAL GENERIC TYPE	HIGH ALLOY

** DAMPERS

FUNCTION	NR
GENERIC TYPE	NR
SPECIFIC TYPE	NR
CONSTRUCTION MATERIAL GENERIC TYPE	NR
CONSTRUCTION MATERIAL SPECIFIC TYPE	NR
LINER GENERIC MATERIAL TYPE	NR
LINER SPECIFIC MATERIAL TYPE	NR

POTOMAC ELECTRIC POWER: DICKERSON 3A (CONT.)

** DUCTWORK

SHELL GENERIC MATERIAL TYPE	NR
SHELL SPECIFIC MATERIAL TYPE	NR
LINER GENERIC MATERIAL TYPE	NR
LINER SPECIFIC MATERIAL TYPE	NR

** REAGENT PREPARATION EQUIPMENT

FUNCTION	NR
DEVICE	NR
DEVICE TYPE	NR

** TANKS

SERVICE	NUMBER
******	1

** SOLIDS CONCENTRATING/DEWATERING

DEVICE	THICKENER
NUMBER	2

*** SLUDGE

** TREATMENT

METHOD	THICKENED
DEVICE	N/A
PROPRIETARY PROCESS	N/A

** DISPOSAL

NATURE	N/A
TYPE	NONE
SITE TREATMENT	N/A

** PROCESS CONTROL AND INSTRUMENTATION

CHEMICAL PARAMETERS	PH, PRESSURE DROP
CONTROL LEVELS	PH 7
MONITOR LOCATION	IN SECOND STAGE SYSTEM
PROCESS CONTROL MANNER	AUTOMATIC
PROCESS CHEMISTRY MODE	FEEDBACK

PERFORMANCE DATA

PERIOD	MODULE	AVAILABILITY	OPERABILITY	RELIABILITY	UTILIZATION	% REMOVAL SO2	% REMOVAL PART.	PER HOURS	BOILER HOURS	FGD HOURS	CAP. FACTOR
0/75	SYSTEM										

** PROBLEMS/SOLUTIONS/COMMENTS

REFER TO THE PERFORMANCE UPDATE INFORMATION FOR DICKERSON 3 LOCATED IN SECTION 14.

SECTION 16
DESIGN AND PERFORMANCE DATA FOR DISCONTINUED DOMESTIC FGD SYSTEMS

COMPANY NAME	PUBLIC SERVICE OF COLORADO	
PLANT NAME	VALMONT	
UNIT NUMBER	5A	
CITY	VALMONT	
STATE	COLORADO	
REGULATORY CLASSIFICATION	B	
PARTICULATE EMISSION LIMITATION - NG/J	43.	(.100 LB/MMBTU)
SO2 EMISSION LIMITATION - NG/J	******	(****** LB/MMBTU)
NOX EMISSION LIMITATION - NG/J	******	(****** LB/MMBTU)
NET PLANT GENERATING CAPACITY - MW	274	
GROSS UNIT GENERATING CAPACITY - MW	166	
NET UNIT GENERATING CAPACITY W/FGD - MW	157	
NET UNIT GENERATING CAPACITY WO/FGD - MW	163	
EQUIVALENT SCRUBBED CAPACITY - MW	166	
** UNIT DATA - BOILER AND STACK		
BOILER SUPPLIER	COMBUSTION ENGINEERING	
BOILER TYPE	PULVERIZED COAL	
BOILER SERVICE LOAD	BASE	
DESIGN BOILER FLUE GAS FLOW - CU.M/S	436.98	(926000 ACFM)
BOILER FLUE GAS TEMPERATURE - C	126.7	(260 F)
STACK HEIGHT - M	******	(**** FT)
STACK SHELL	******	
STACK TOP DIAMETER - M	*******	(***** FT)
** FUEL DATA		
FUEL TYPE	COAL	
FUEL GRADE	SUBBITUMINOUS	
AVERAGE HEAT CONTENT - J/G	25121.	(10800 BTU/LB)
RANGE HEAT CONTENT - BTU/LB		******
AVERAGE ASH CONTENT - %	6.00	
RANGE ASH CONTENT - %	5.4-7.0	
AVERAGE MOISTURE CONTENT - %	15.00	
RANGE MOISTURE CONTENT - %	12.7-18.3	
AVERAGE SULFUR CONTENT - %	.70	
RANGE SULFUR CONTENT - %	0.6-0.7	
AVERAGE CHLORIDE CONTENT - %	********	
RANGE CHLORIDE CONTENT - %	******	
*** PARTICLE CONTROL		
** MECHANICAL COLLECTOR		
NUMBER	1	
INLET FLUE GAS CAPACITY - CU.M/S	218.5	(463000 ACFM)
** FABRIC FILTER		
NUMBER	0	
TYPE	NONE	
** ESP		
NUMBER	1	
TYPE	COLD SIDE	
INLET FLUE GAS CAPACITY - CU.M/S	218.5	(463000 ACFM)
** PARTICLE SCRUBBER		
NUMBER	1	
INITIAL START-UP DATE	11/71	
GENERIC TYPE	PACKED TOWER	
SPECIFIC TYPE	MOBILE BED PACKING	
TRADE NAME/COMMON NAME	TURBULENT CONTACT ABSORBER	
SUPPLIER	AIR CORRECTION DIVISION, UOP	
SHELL GENERIC MATERIAL	CARBON STEEL	
SHELL SPECIFIC MATERIAL	AISI 1110	
LINER GENERIC MATERIAL	ORGANIC	
LINER SPECIFIC MATERIAL	RUBBER	
GAS CONTACTING DEVICE TYPE	STAINLESS STEEL	
NUMBER OF CONTACTING ZONES	3	
L/G RATIO - LITER/CU.M	7.8	(58.3 GAL/1000ACF)
PRESSURE DROP - KPA	3.7	(15.0 IN-H2O)

PUBLIC SERVICE OF COLORADO: VALMONT 5A (CONT.)

SUPERFICIAL GAS VELOCITY - M/S	3.4	(11.0 FT/S)
INLET GAS FLOW RATE - CU.M/S	109.2	(231500 ACFM)
INLET GAS TEMPERATURE - C	132.8	(271 F)
SO2 REMOVAL EFFICENCY - %	45.0	
PARTICLE REMOVAL EFFICIENCY - %	96.0	

*** FGD SYSTEM

** GENERAL DATA

SALEABLE PRODUCT/THROWAWAY PRODUCT	THROWAWAY PRODUCT
SO2 REMOVAL MODE	WET SCRUBBING
PROCESS TYPE	LIMESTONE/ALKALINE FLYASH
PROCESS ADDITIVES	NONE
SYSTEM SUPPLIER	UOP/PUBLIC SERVICE OF COLORADO
A-E FIRM	STEARNS-ROGER
DEVELOPMENT LEVEL	EXPERIMENTAL
NEW/RETROFIT	RETROFIT
UNIT DESIGN PARTICLE REMOVAL EFFICIENCY - %	95.00
UNIT DESIGN SO2 REMOVAL EFFICIENCY - %	85.00

WARNING **UNNORMALIZED NUMBER(S) BEING EDITED FOR OUTPUT**

ENERGY CONSUMPTION - %	.0
CURRENT STATUS	8
TERMINATION	3/75
INITIAL START-UP	10/74

** DESIGN AND OPERATING PARAMETERS

** QUENCHER/PRESATURATOR

CONSTRUCTION MATERIAL GENERIC TYPE	NR
CONSTRUCTION MATERIAL SPECIFIC TYPE	NR

** ABSORBER

NUMBER	1
NUMBER OF SPARES	0
GENERIC TYPE	PACKED TOWER
SPECIFIC TYPE	MOBILE BED PACKING
TRADE NAME/COMMON TYPE	TURBULENT CONTACT ABSORBER
SUPPLIER	AIR CORRECTION DIVISION, UOP
SHELL GENERIC MATERIAL	CARBON STEEL
SHELL SPECIFIC MATERIAL	AISI 1110
SHELL MATERIAL TRADE NAME/COMMON TYPE	N/A
LINER GENERIC MATERIAL	ORGANIC
LINER SPECIFIC MATERIAL	SYNTHETIC RUBBER
LINER MATERIAL TRADE NAME/COMMON TYPE	NEOPRENE LS-576
SO2 REMOVAL EFFICIENCY - %	77.5

** MIST ELIMINATOR

PRE-MIST ELIMINATOR/MIST ELIMINATOR	PRIMARY COLLECTOR	
GENERIC TYPE	IMPINGEMENT	
SPECIFIC TYPE	BAFFLE	
TRADE NAME/COMMON TYPE	CLOSED VANE	
CONFIGURATION	HORIZONTAL	
NUMBER OF STAGES	2	
NUMBER OF PASSES PER STAGE	7	
PRESSURE DROP - KPA	.1	(.5 IN-H2O)
CONSTRUCTION MATERIAL GENERIC TYPE	STAINLESS STEEL	
CONSTRUCTION MATERIAL SPECIFIC TYPE	NR	
WASH WATER SOURCE	SUPERNATANT	

** REHEATER

NUMBER	1	
GENERIC TYPE	IN-LINE	
SPECIFIC TYPE	STEAM	
TRADE NAME/COMMON TYPE	NR	
TEMPERATURE INCREASE - C	36.1	(65 F)
CONSTRUCTION MATERIAL GENERIC TYPE	NR	
CONSTRUCTION MATERIAL SPECIFIC TYPE	NR	

** FANS

FUNCTION	BOOSTER
APPLICATION	FORCED DRAFT
SERVICE	DRY

PUBLIC SERVICE OF COLORADO: VALMONT 5A (CONT.)

CONSTRUCTION MATERIAL GENERIC TYPE	CARBON STEEL
** DAMPERS	
FUNCTION	NR
GENERIC TYPE	NR
SPECIFIC TYPE	NR
CONSTRUCTION MATERIAL GENERIC TYPE	NR
CONSTRUCTION MATERIAL SPECIFIC TYPE	NR
LINER GENERIC MATERIAL TYPE	NR
LINER SPECIFIC MATERIAL TYPE	NR
** DUCTWORK	
LOCATION	OUTLET
SHELL GENERIC MATERIAL TYPE	CARBON STEEL
SHELL SPECIFIC MATERIAL TYPE	AISI 1110
LINER GENERIC MATERIAL TYPE	NONE
LINER SPECIFIC MATERIAL TYPE	N/A
** REAGENT PREPARATION EQUIPMENT	
FUNCTION	WET BALL MILL
DEVICE	NR
DEVICE TYPE	NR
** TANKS	
SERVICE	NUMBER
---	---
RECYCLE WATER	1
** SOLIDS CONCENTRATING/DEWATERING	
DEVICE	THICKENER
*** SLUDGE	
** TREATMENT	
METHOD	BLEED
DEVICE	N/A
PROPRIETARY PROCESS	N/A
** DISPOSAL	
NATURE	FINAL
TYPE	POND
SITE TREATMENT	NONE
** WATER BALANCE	
WATER LOOP TYPE	CLOSED
EVAPORATION WATER LOSS - LITER/S	5.5 (88 GPM)

----------PERFORMANCE DATA----------

PERIOD	MODULE	AVAILABILITY	OPERABILITY	RELIABILITY	UTILIZATION	% REMOVAL SO2	% REMOVAL PART.	PER HOURS	BOILER HOURS	FGD HOURS	CAP. FACTOR
10/74	SYSTEM										

** PROBLEMS/SOLUTIONS/COMMENTS

REFER TO PERFORMANCE UPDATE INFORMATION FOR VALMONT 5 LOCATED IN SECTION 14 OF THIS REPORT.

SECTION 16
DESIGN AND PERFORMANCE DATA FOR DISCONTINUED DOMESTIC FGD SYSTEMS

COMPANY NAME	SOUTHERN CALIFORNIA EDISON	
PLANT NAME	MOHAVE	
UNIT NUMBER	1A	
CITY	LAUGHLIN	
STATE	NEVADA	
REGULATORY CLASSIFICATION	B	
PARTICULATE EMISSION LIMITATION - NG/J	28.	(.064 LB/MMBTU)
SO2 EMISSION LIMITATION - NG/J	64.	(.150 LB/MMBTU)
NOX EMISSION LIMITATION - NG/J	******	(****** LB/MMBTU)
NET PLANT GENERATING CAPACITY - MW	1580	
GROSS UNIT GENERATING CAPACITY - MW	790	
NET UNIT GENERATING CAPACITY W/FGD - MW	790	
NET UNIT GENEPATING CAPACITY WO/FGD - MW	790	
EQUIVALENT SCRUBBED CAPACITY - MW	170	
** UNIT DATA - BOILER AND STACK		
BOILER SUPPLIER	COMBUSTION ENGINEERING	
BOILER TYPE	PULVERIZED COAL	
BOILER SERVICE LOAD	BASE	
DESIGN BOILER FLUE GAS FLOW - CU.M/S	********	(******* ACFM)
BOILER FLUE GAS TEMPERATURE - C	132.2	(270 F)
STACK HEIGHT - M	152.	(500 FT)
STACK SHELL	******	
STACK TOP DIAMETER - M	*******	(***** FT)
** FUEL DATA		
FUEL TYPE	COAL	
FUEL GRADE	******	
AVERAGE HEAT CONTENT - J/G	26749.	(11500 BTU/LB)
RANGE HEAT CONTENT - BTU/LB		11000-12000
AVERAGE ASH CONTENT - %	10.00	
RANGE ASH CONTENT - %	******	
AVERAGE MOISTURE CONTENT - %	********	
RANGE MOISTURE CONTENT - %	******	
AVERAGE SULFUR CONTENT - %	.40	
RANGE SULFUR CONTENT - %	******	
AVERAGE CHLORIDE CONTENT - %	********	
RANGE CHLOPIDE CONTENT - %	******	
*** PARTICLE CONTROL		
** MECHANICAL COLLECTOR		
NUMBER	0	
TYPE	NONE	
** FABRIC FILTER		
NUMBER	0	
TYPE	NONE	
** ESP		
NUMBER	1	
SUPPLIER	RESEARCH-COTTRELL	
PARTICLE REMOVAL EFFICENCY - %	97.2	
** PARTICLE SCRUBBER		
GENERIC TYPE	NONE	
SPECIFIC TYPE	N/A	
TRADE NAME/COMMON NAME	N/A	
GAS CONTACTING DEVICE TYPE	N/A	
*** FGD SYSTEM		
** GENERAL DATA		
SALEABLE PRODUCT/THROWAWAY PRODUCT	THROWAWAY PRODUCT	
SO2 REMOVAL MODE	WET SCRUBBING	
PROCESS TYPE	LIMESTONE	
SYSTEM SUPPLIER	AIR COPRECTION DIVISION, UOP	
DEVELOPMENT LEVEL	PROTOTYPE	
NEW/RETROFIT	RETROFIT	

SOUTHERN CALIFORNIA EDISON: MOHAVE 1A (CONT.)

UNIT DESIGN PARTICLE REMOVAL EFFICIENCY - %	97.20
ENERGY CONSUMPTION - %	.0
CURRENT STATUS	8
TERMINATION	7/75
COMMERCIAL START-UP	1/74

** DESIGN AND OPERATING PARAMETERS

** QUENCHER/PRESATURATOR

CONSTRUCTION MATERIAL GENERIC TYPE	NR
CONSTRUCTION MATERIAL SPECIFIC TYPE	NR

** ABSORBER

NUMBER	1	
GENERIC TYPE	PACKED TOWER	
SPECIFIC TYPE	MOBILE BED PACKING	
TRADE NAME/COMMON TYPE	TURBULENT CONTACT ABSORBER	
SUPPLIER	AIR CORRECTION DIVISION, UOP	
DIMENSIONS - FT	18.0 X 40.0 X 90.0	
SHELL GENERIC MATERIAL	CARBON STEEL	
SHELL SPECIFIC MATERIAL	AISI 1110	
SHELL MATERIAL TRADE NAME/COMMON TYPE	N/A	
LINER GENERIC MATERIAL	ORGANIC	
LINER SPECIFIC MATERIAL	NATURAL RUBBER	
LINER MATERIAL TRADE NAME/COMMON TYPE	BLACK NATURAL RUBBER	
GAS CONTACTING DEVICE TYPE	PLASTIC/RUBBER MOBILE BALLS	
NUMBER OF CONTACTING ZONES	4	
L/G RATIO - L/CU.M	11.1	(83.0 GAL/1000 ACF)
SUPERFICAL GAS VELOCITY - M/SEC	3.8	(12.6 FT/S)
INLET GAS FLOW - CU. M/S	212.35	(450000 ACFM)
SO2 REMOVAL EFFICIENCY - %	95.0	
PARTICLE REMOVAL EFFICENCY - %	93.0	

** MIST ELIMINATOR

PRE-MIST ELIMINATOR/MIST ELIMINATOR	PRIMARY COLLECTOR
GENERIC TYPE	NR
SPECIFIC TYPE	NR
TRADE NAME/COMMON TYPE	NR
CONSTRUCTION MATERIAL GENERIC TYPE	NR
CONSTRUCTION MATERIAL SPECIFIC TYPE	NR
WASH FREQUENCY	CONTINUOUS

** REHEATER

NUMBER	1	
GENERIC TYPE	IN-LINE	
SPECIFIC TYPE	STEAM	
TRADE NAME/COMMON TYPE	NR	
TEMPERATURE INCREASE - C	30.6	(55 F)
INLET FLUE GAS TEMPERATURE - C	51.7	(125 F)
CONSTRUCTION MATERIAL GENERIC TYPE	NR	
CONSTRUCTION MATERIAL SPECIFIC TYPE	NR	

** FANS

NUMBER	1
APPLICATION	BOOSTER

** DAMPERS

FUNCTION	NR
GENERIC TYPE	NR
SPECIFIC TYPE	NR
CONSTRUCTION MATERIAL GENERIC TYPE	NR
CONSTRUCTION MATERIAL SPECIFIC TYPE	NR
LINER GENERIC MATERIAL TYPE	NR
LINER SPECIFIC MATERIAL TYPE	NR

** DUCTWORK

SHELL GENERIC MATERIAL TYPE	NR
SHELL SPECIFIC MATERIAL TYPE	NR
LINER GENERIC MATERIAL TYPE	NR
LINER SPECIFIC MATERIAL TYPE	NR

SOUTHERN CALIFORNIA EDISON: MOHAVE 1A (CONT.)

** REAGENT PREPARATION EQUIPMENT

FUNCTION	WET BALL MILL
DEVICE	COMPARTMENTED
DEVICE TYPE	NR
NUMBER	1

** SOLIDS CONCENTRATING/DEWATERING

DEVICE	CENTRIFUGE

** SOLIDS CONCENTRATING/DEWATERING

DEVICE	THICKENER

** SOLIDS CONCENTRATING/DEWATERING

DEVICE	VACUUM FILTER

*** SLUDGE

** TREATMENT

METHOD	FIXATION
DEVICE	PUG MILL
PROPRIETARY PROCESS	CONVERSION SYSTEMS

** DISPOSAL

NATURE	FINAL
TYPE	POND
LOCATION	ON-SITE
SITE TRANSPORTATION METHOD	TRUCK
SITE TREATMENT	NR

PERFORMANCE DATA

PERIOD	MODULE	AVAILABILITY	OPERABILITY	RELIABILITY	UTILIZATION	% REMOVAL SO2	% REMOVAL PART.	PER HOURS	BOILER HOURS	FGD HOURS	CAP. FACTOR
10/74	SYSTEM							744			

** PROBLEMS/SOLUTIONS/COMMENTS

TWO PROTOTYPE SULFUR DIOXIDE ABSORBER MODULES WERE INSTALLED IN 1973 AT THE MOHAVE GENERATING STATION. THE VERTICAL MODULE, A UNIVERSAL OIL PRODUCTS TURBULENT CONTACT ABSORBER (TCA) WAS TESTED IN TWO MODES; FIRST AS A TCA UNIT, FROM NOVEMBER 2, 1974 TO APRIL 30, 1975, AND SECOND AS A POLYGRID PACKED ABSORBER (PPA), WHEN THE "PING PONG BALLS" WERE REPLACED WITH A PLASTIC "EGGCRATE" PACKING WITH TESTING CONTINUOUS TO JULY 2, 1975.

STARTUP OF THE MOHAVE 1A EXPERIMENTAL SYSTEM COMMENCED ON OCTOBER 31, 1974 AND OPERATED WITH AN AVAILABILITY OF 72% THROUGH EIGHT MONTHS OF TESTING.

THROUGH THE EIGHT MONTHS OF OPERATION, THE SYSTEM WAS OUT OF SERVICE APPROXIMATELY 1585 HOURS. THE OUTAGE TIME WAS CAUSED BY NECESSARY REPAIRS TO THE GRIDS, NOZZLES, TRAP-OUT TRAY AND TO REPAIR/REALIGN PPA PACKING. ADDITIONAL OUTAGE TIME WAS NECESSARY TO REDISTRIBUTE THE TCA BALLS, CLEAN SCALE FROM THE SCRUBBER INTERNALS, CORRECT BOOSTER FAN TRIP PROBLEMS, CONDUCT INSPECTIONS FOR EXTENDED OPERATIONS AND REMOVE A HARDHAT FROM THE THICKENER.

SYSTEM OPERATIONS WERE TERMINATED ON JULY 2, 1975. UP TO THIS TIME, THE SYSTEM LOGGED 4228 HOURS OF OPERATION.

SECTION I6
DESIGN AND PERFORMANCE DATA FOR DISCONTINUED DOMESTIC FGD SYSTEMS

COMPANY NAME	SOUTHERN CALIFORNIA EDISON	
PLANT NAME	MOHAVE	
UNIT NUMBER	2A	
CITY	LAUGHLIN	
STATE	NEVADA	
REGULATORY CLASSIFICATION	B	
PARTICULATE EMISSION LIMITATION - NG/J	28.	(.064 LB/MMBTU)
SO2 EMISSION LIMITATION - NG/J	64.	(.150 LB/MMBTU)
NOX EMISSION LIMITATION - NG/J	******	(****** LB/MMBTU)
NET PLANT GENERATING CAPACITY - MW	1580	
GROSS UNIT GENERATING CAPACITY - MW	790	
NET UNIT GENERATING CAPACITY W/FGD - MW	790	
NET UNIT GENERATING CAPACITY WO/FGD - MW	790	
EQUIVALENT SCRUBBED CAPACITY - MW	160	
** UNIT DATA - BOILER AND STACK		
BOILER SUPPLIER	COMBUSTION ENGINEERING	
BOILER TYPE	PULVERIZED COAL	
BOILER SERVICE LOAD	BASE	
DESIGN BOILER FLUE GAS FLOW - CU.M/S	********	(******* ACFM)
BOILER FLUE GAS TEMPERATURE - C	132.2	(270 F)
STACK HEIGHT - M	152.	(500 FT)
STACK SHELL	******	
STACK TOP DIAMETER - M	*******	(***** FT)
** FUEL DATA		
FUEL TYPE	COAL	
FUEL GRADE	******	
AVERAGE HEAT CONTENT - J/G	26749.	(11500 BTU/LB)
RANGE HEAT CONTENT - BTU/LB		11000-12000
AVERAGE ASH CONTENT - %	10.00	
RANGE ASH CONTENT - %	******	
AVERAGE MOISTURE CONTENT - %	********	
RANGE MOISTURE CONTENT - %	******	
AVERAGE SULFUR CONTENT - %	.40	
RANGE SULFUR CONTENT - %	******	
AVERAGE CHLORIDE CONTENT - %	********	
RANGE CHLORIDE CONTENT - %	******	
*** PARTICLE CONTROL		
** MECHANICAL COLLECTOR		
NUMBER	0	
TYPE	NONE	
** FABRIC FILTER		
NUMBER	0	
TYPE	NONE	
** ESP		
NUMBER	1	
SUPPLIER	RESEARCH-COTTRELL	
PARTICLE REMOVAL EFFICENCY - %	97.2	
** PARTICLE SCRUBBER		
GENERIC TYPE	NONE	
SPECIFIC TYPE	N/A	
TRADE NAME/COMMON NAME	N/A	
GAS CONTACTING DEVICE TYPE	N/A	
*** FGD SYSTEM		
** GENERAL DATA		
SALEABLE PRODUCT/THROWAWAY PRODUCT	THROWAWAY PRODUCT	
SO2 REMOVAL MODE	WET SCRUBBING	
PROCESS TYPE	LIME	
SYSTEM SUPPLIER	SO. CALIFORNIA EDISON/STEARNS-	
A-E FIRM	STEARNS-ROGER	
DEVELOPMENT LEVEL	PROTOTYPE	

EPA UTILITY FGD SURVEY: OCTOBER - DECEMBER 1981

SOUTHERN CALIFORNIA EDISON: MOHAVE 2A (CONT.)

NEW/RETROFIT	RETROFIT
UNIT DESIGN PARTICLE REMOVAL EFFICIENCY - %	97.20

WARNING **UNNORMALIZED NUMBER(S) BEING EDITED FOR OUTPUT**

ENERGY CONSUMPTION - %	.0
CURRENT STATUS	8
TERMINATION	2/75
COMMERCIAL START-UP	11/73

** DESIGN AND OPERATING PARAMETERS

** QUENCHER/FRESATURATOR

CONSTRUCTION MATERIAL GENERIC TYPE	NR
CONSTRUCTION MATERIAL SPECIFIC TYPE	NR

** ABSORBER

NUMBER	1	
GENERIC TYPE	SPRAY TOWER	
SPECIFIC TYPE	OPEN CROSSCURRENT SPRAY	
TRADE NAME/COMMON TYPE	HORIZONTAL SPRAY CHAMBER	
SUPPLIER	SO. CALIFORNIA EDISON/STEARNS-ROGER	
DIMENSIONS - FT	15.0 X 30.0 X 60.0	
SHELL GENERIC MATERIAL	CARBON STEEL	
SHELL SPECIFIC MATERIAL	AISI 1110	
SHELL MATERIAL TRADE NAME/COMMON TYPE	N/A	
LINER GENERIC MATERIAL	NR	
LINER SPECIFIC MATERIAL	NR	
LINER MATERIAL TRADE NAME/COMMON TYPE	NR	
GAS CONTACTING DEVICE TYPE	NONE	
NUMBER OF CONTACTING ZONES	4	
L/G RATIO - L/CU.M	4.0	(30.0 GAL/1000 ACF)
SUPERFICAL GAS VELOCITY - M/SEC	6.6	(21.6 FT/S)
INLET GAS FLOW - CU. M/S	212.35	(450000 ACFM)
SO2 REMOVAL EFFICIENCY - %	95.0	
PARTICLE REMOVAL EFFICENCY - % .	93.0	

** MIST ELIMINATOR

PRE-MIST ELIMINATOR/MIST ELIMINATOR	PRIMARY COLLECTOR
GENERIC TYPE	NR
SPECIFIC TYPE	NR
TRADE NAME/COMMON TYPE	NR
CONFIGURATION	VERTICAL
NUMBER OF STAGES	1
CONSTRUCTION MATERIAL GENERIC TYPE	NR
CONSTRUCTION MATERIAL SPECIFIC TYPE	NR

** REHEATER

NUMBER	1	
GENERIC TYPE	INDIRECT HOT AIR	
SPECIFIC TYPE	EXTERNAL HEAT EXCHANGER	
TRADE NAME/COMMON TYPE	STEAM TUBE BUNDLE	
TEMPERATURE INCREASE - C	30.6	(55 F)
INLET FLUE GAS TEMPERATURE - C	48.9	(120 F)
CONSTRUCTION MATERIAL GENERIC TYPE	NR	
CONSTRUCTION MATERIAL SPECIFIC TYPE	NR	

** FANS

NUMBER	1
APPLICATION	BOOSTER

** DAMPERS

FUNCTION	NR
GENERIC TYPE	NR
SPECIFIC TYPE	NR
CONSTRUCTION MATERIAL GENERIC TYPE	NR
CONSTRUCTION MATERIAL SPECIFIC TYPE	NR
LINER GENERIC MATERIAL TYPE	NR
LINER SPECIFIC MATERIAL TYPE	NR

** DUCTWORK

SHELL GENERIC MATERIAL TYPE	NR
SHELL SPECIFIC MATERIAL TYPE	NR
LINER GENERIC MATERIAL TYPE	NR

SOUTHERN CALIFORNIA EDISON: MOHAVE 2A (CONT.)

LINER SPECIFIC MATERIAL TYPE	NR
** REAGENT PREPARATION EQUIPMENT	
FUNCTION	SLAKER
DEVICE	NR
DEVICE TYPE	NR
** SOLIDS CONCENTRATING/DEWATERING	
DEVICE	NR
*** SLUDGE	
** TREATMENT	
METHOD	FIXATION
DEVICE	MIX TANK
PROPRIETARY PROCESS	DRAVO
** DISPOSAL	
NATURE	FINAL
TYPE	POND
SITE TREATMENT	CLAY LINED
** WATER BALANCE	
WATER LOOP TYPE	CLOSED

PERFORMANCE DATA

PERIOD	MODULE	AVAILABILITY	OPERABILITY	RELIABILITY	UTILIZATION	% REMOVAL SO2	% REMOVAL PART.	PER HOURS	BOILER HOURS	FGD HOURS	CAP. FACTOR
11/73	SYSTEM										

** PROBLEMS/SOLUTIONS/COMMENTS

TWO PROTOTYPE SULFUR DIOXIDE ABSORBER MODULES WERE INSTALLED IN 1973 AT THE MOHAVE GENERATING STATION. A FOUR-STAGE HORIZONTAL CROSSFLOW SPRAY SCRUBBER WAS INSTALLED ON UNIT 2.

IN NOVEMBER 1973 THE UTILITY OPERATED THE FGD SYSTEM AT MOHAVE 2A IN A SHORT SERIES OF STARTUP TESTS THAT ENDED ON JANUARY 16, 1974 WHEN A FORMAL TEST PROGRAM WAS INITIATED TO ACCESS PERFORMANCE AND RELIABILITY CHARACTERISTICS OF THE SCRUBBING SYSTEM.

DURING THE 13 MONTHS OF EXPERIMENTAL OPERATION THE SYSTEM EXPERIENCED A NUMBER OF PROBLEMS WHICH ACCOUNTED FOR APPROXIMATELY 1757 HOURS OF OUTAGE TIME. THESE OUTAGES WERE CAUSED BY PUMP REPAIRS, HOPPER LEAKS, BOOSTER FAN BALANCE PROBLEMS, MODIFICATIONS AND REPAIR OF THE PLASTIC MIST ELIMINATOR BLADES, SPRAY NOZZLE REPLACEMENT, GAS INLET FLOW DISTRIBUTION MODIFICATIONS, SLAKING WATER MODIFICATIONS FOR SCALE PREVENTION, AN INSPECTION FOR EXTENDED OPERATIONS AND REMOVAL OF A HARDHAT FROM THE THICKENER.

THE TEST PROGRAM WAS TERMINATED ON FEBRUARY 9, 1975 FOLLOWING 5927 HOURS OF OPERATION. THE MODULE WAS SUBSEQUENTLY DISMANTLED, TRANSPORTED, AND REASSEMBLED AT THE FOUR CORNERS PLANT OF ARIZONA PUBLIC SERVICE WHERE ADDITIONAL TESTING WAS CONDUCTED AND COMPLETED (DECEMBER 1976).

SECTION 16
DESIGN AND PERFORMANCE DATA FOR DISCONTINUED DOMESTIC FGD SYSTEMS

COMPANY NAME	TENNESSEE VALLEY AUTHORITY	
PLANT NAME	SHAWNEE	
UNIT NUMBER	10C	
CITY	PADUCAH	
STATE	KENTUCKY	
REGULATORY CLASSIFICATION	B	
PARTICULATE EMISSION LIMITATION - NG/J	43.	(.100 LB/MMBTU)
SO2 EMISSION LIMITATION - NG/J	516.	(1.200 LB/MMBTU)
NOX EMISSION LIMITATION - NG/J	******	(****** LB/MMBTU)
NET PLANT GENERATING CAPACITY - MW	1750	
GROSS UNIT GENERATING CAPACITY - MW	10	
NET UNIT GENERATING CAPACITY W/FGD - MW	*****	
NET UNIT GENERATING CAPACITY WO/FGD - MW	*****	
EQUIVALENT SCRUBBED CAPACITY - MW	10	

** UNIT DATA - BOILER AND STACK

BOILER SUPPLIER	BABCOCK & WILCOX	
BOILER TYPE	PULVERIZED COAL	
BOILER SERVICE LOAD	BASE	
DESIGN BOILER FLUE GAS FLOW - CU.M/S	********	(******* ACFM)
BOILER FLUE GAS TEMPERATURE - C	*******	(**** F)
STACK HEIGHT - M	244.	(800 FT)
STACK SHELL	******	
STACK TOP DIAMETER - M	*******	(***** FT)

** FUEL DATA

FUEL TYPE	COAL	
FUEL GRADE	BITUMINOUS	
AVERAGE HEAT CONTENT - J/G	******	(****** BTU/LB)
RANGE HEAT CONTENT - BTU/LB		******
AVERAGE ASH CONTENT - %	********	
RANGE ASH CONTENT - %	******	
AVERAGE MOISTURE CONTENT - %	********	
RANGE MOISTURE CONTENT - %	******	
AVERAGE SULFUR CONTENT - %	2.90	
RANGE SULFUR CONTENT - %	******	
AVERAGE CHLORIDE CONTENT - %	********	
RANGE CHLORIDE CONTENT - %	******	

*** PARTICLE CONTROL

** PARTICLE SCRUBBER

GENERIC TYPE	PACKED TOWER
SPECIFIC TYPE	MOBILE BED PACKING
TRADE NAME/COMMON NAME	TURBULENT CONTACT ABSORBER
GAS CONTACTING DEVICE TYPE	PLASTIC SPHERES

*** FGD SYSTEM

** GENERAL DATA

SALEABLE PRODUCT/THROWAWAY PRODUCT	THROWAWAY PRODUCT
SO2 REMOVAL MODE	WET SCRUBBING
PROCESS TYPE	LIME/LIMESTONE
SYSTEM SUPPLIER	COMBUSTION ENGINEERING
A-E FIRM	BECHTEL
DEVELOPMENT LEVEL	PROTOTYPE
NEW/RETROFIT	RETROFIT

WARNING **UNNORMALIZED NUMBER(S) BEING EDITED FOR OUTPUT**

ENERGY CONSUMPTION - %	.0
CURRENT STATUS	8
TERMINATION	7/73
INITIAL START-UP	4/72

** DESIGN AND OPERATING PARAMETERS

** QUENCHER/PRESATURATOR

CONSTRUCTION MATERIAL GENERIC TYPE	NR
CONSTRUCTION MATERIAL SPECIFIC TYPE	NR

TENNESSEE VALLEY AUTHORITY: SHAWNEE 10C (CONT.)

** ABSORBER	
GENERIC TYPE	PACKED TOWER
SPECIFIC TYPE	STATIC BED PACKING
TRADE NAME/COMMON TYPE	MARBLE-BED SCRUBBER
SHELL GENERIC MATERIAL	NR
SHELL SPECIFIC MATERIAL	NR
SHELL MATERIAL TRADE NAME/COMMON TYPE	NR
LINER GENERIC MATERIAL	NR
LINER SPECIFIC MATERIAL	NR
LINER MATERIAL TRADE NAME/COMMON TYPE	NR
GAS CONTACTING DEVICE TYPE	GLASS MARBLES
INLET GAS FLOW - CU. M/S	14.16 (30000 ACFM)
** MIST ELIMINATOR	
PRE-MIST ELIMINATOR/MIST ELIMINATOR	NR
GENERIC TYPE	NR
SPECIFIC TYPE	NR
TRADE NAME/COMMON TYPE	NR
CONSTRUCTION MATERIAL GENERIC TYPE	NR
CONSTRUCTION MATERIAL SPECIFIC TYPE	NR
** REHEATER	
GENERIC TYPE	DIRECT COMBUSTION
SPECIFIC TYPE	NR
TRADE NAME/COMMON TYPE	OIL
CONSTRUCTION MATERIAL GENERIC TYPE	NR
CONSTRUCTION MATERIAL SPECIFIC TYPE	NR
** DAMPERS	
FUNCTION	NR
GENERIC TYPE	NR
SPECIFIC TYPE	NR
CONSTRUCTION MATERIAL GENERIC TYPE	NR
CONSTRUCTION MATERIAL SPECIFIC TYPE	NR
LINER GENERIC MATERIAL TYPE	NR
LINER SPECIFIC MATERIAL TYPE	NR
** DUCTWORK	
SHELL GENERIC MATERIAL TYPE	NR
SHELL SPECIFIC MATERIAL TYPE	NR
LINER GENERIC MATERIAL TYPE	NR
LINER SPECIFIC MATERIAL TYPE	NR
** REAGENT PREPARATION EQUIPMENT	
FUNCTION	NR
DEVICE	NR
DEVICE TYPE	NR
** SOLIDS CONCENTRATING/DEWATERING	
DEVICE	VACUUM FILTER
*** SLUDGE	
** TREATMENT	
METHOD	DEWATERED
DEVICE	N/A
PROPRIETARY PROCESS	N/A
** DISPOSAL	
NATURE	FINAL
TYPE	LANDFILL
SITE TREATMENT	NONE

TENNESSEE VALLEY AUTHORITY: SHAWNEE 10C (CONT.)

PERIOD	MODULE	AVAILABILITY	OPERABILITY	RELIABILITY	UTILIZATION	% REMOVAL SO2	% REMOVAL PART.	PER HOURS	BOILER HOURS	FGD HOURS	CAP. FACTOR
4/72	SYSTEM							720			

** PROBLEMS/SOLUTIONS/COMMENTS

IN JUNE 1968, THE EPA INITIATED A PROGRAM TO TEST PROTOTYPE WET LIME AND LIMESTONE SCRUBBING SYSTEMS FOR REMOVAL OF SULFUR DIOXIDE AND PARTICLE MATTER FROM FLUE GAS. THREE PARALLEL WET SCRUBBER SYSTEMS WERE SELECTED FOR THE TEST PROJECT: 1) A VENTURI WITH A SPRAY TOWER AFTER THE ABSORBER; 2) A TURBULENT CONTACT ABSORBER (TCA); AND 3) A MARBLE-BED ABSORBER.
THE MARBLE-BED ABSORBER TESTED ON SHAWNEE 10C USED A PACKING OF 3/4 INCH GLASS MARBLE SPHERES AND A TURBULENT LAYER OF LIQUID AND GAS ABOVE THE MARBLE LAYER TO ENHANCE MASS TRANSFER.
THE TEST FACILITY WAS DESIGNED SO THAT MODIFICATIONS AND VARIATIONS OF SCRUBBER INTERNALS AND PIPING COULD BE READILY EMPLOYED FOR EACH SCRUBBER SYSTEM.

THE MARBLE BED ABSORBER AT SHAWNEE 10C COMMENCED OPERATIONS IN APRIL 1972.

THIS MARBLE-BED ABSORBER WAS DISCONTINUED EARLY IN THE TEST PROGRAM, JULY 1973, BECAUSE OF CONTINUED OPERATING PROBLEMS WITH NOZZLE FAILURE AND SUBSEQUENT PLUGGING OF THE MARBLE-BED.

SECTION 16
DESIGN AND PERFORMANCE DATA FOR DISCONTINUED DOMESTIC FGD SYSTEMS

COMPANY NAME	UNION ELECTRIC	
PLANT NAME	MEREMAC	
UNIT NUMBER	2	
CITY	******	
STATE	MISSOURI	
REGULATORY CLASSIFICATION	******	
PARTICULATE EMISSION LIMITATION - NG/J	******	(****** LB/MMBTU)
SO2 EMISSION LIMITATION - NG/J	******	(****** LB/MMBTU)
NOX EMISSION LIMITATION - NG/J	******	(****** LB/MMBTU)
NET PLANT GENERATING CAPACITY - MW	4135	
GROSS UNIT GENERATING CAPACITY - MW	140	
NET UNIT GENERATING CAPACITY W/FGD - MW	125	
NET UNIT GENERATING CAPACITY WO/FGD - MW	*****	
EQUIVALENT SCRUBBED CAPACITY - MW	140	
** UNIT DATA - BOILER AND STACK		
BOILER SUPPLIER	******	
BOILER TYPE	PULVERIZED COAL	
BOILER SERVICE LOAD	BASE	
DESIGN BOILER FLUE GAS FLOW - CU.M/S	********	(******* ACFM)
BOILER FLUE GAS TEMPERATURE - C	*******	(**** F)
STACK HEIGHT - M	******	(**** FT)
STACK SHELL	******	
STACK TOP DIAMETER - M	*******	(***** FT)
** FUEL DATA		
FUEL TYPE	COAL	
FUEL GRADE	******	
AVEPAGE HEAT CONTENT - J/G	******	(****** BTU/LB)
RANGE HEAT CONTENT - BTU/LB		******
AVERAGE ASH CONTENT - %	********	
RANGE ASH CONTENT - %	******	
AVERAGE MOISTURE CONTENT - %	********	
RANGE MOISTUPE CONTENT - %	******	
AVERAGE SULFUR CONTENT - %	3.40	
RANGE SULFUR CONTENT - %	******	
AVERAGE CHLORIDE CONTENT - %	********	
RANGE CHLORIDE CONTENT - %	******	
*** PARTICLE CONTROL		
** PARTICLE SCRUBBER		
GENEPIC TYPE	PACKED TOWER	
SPECIFIC TYPE	STATIC BED PACKING	
TRADE NAME/COMMON NAME	MARBLE-BED SCRUBBER	
GAS CONTACTING DEVICE TYPE	PLASTIC SPHERES	
*** FGD SYSTEM		
** GENERAL DATA		
SALEABLE PRODUCT/THROWAWAY PRODUCT	THROWAWAY PRODUCT	
SO2 REMOVAL MODE	WET SCRUBBING	
PROCESS TYPE	LIMESTONE	
SYSTEM SUPPLIER	COMBUSTION ENGINEERING	
DEVELOPMENT LEVEL	FULL SCALE	
NEW/RETROFIT	RETPOFIT	
UNIT DESIGN PARTICLE REMOVAL EFFICIENCY - %	99.00	
UNIT DESIGN SO2 REMOVAL EFFICIENCY - %	83.00	
ENERGY CONSUMPTION - %	.0	
CURRENT STATUS	8	
TERMINATION	0/69	
INITIAL START-UP	3/68	
** DESIGN AND OPERATING PARAMETERS		
** QUENCHER/PRESATURATOR		
CONSTRUCTION MATERIAL GENERIC TYPE	NR	
CONSTRUCTION MATERIAL SPECIFIC TYPE	NR	

UNION ELECTRIC: MEREMAC 2 (CONT.)

** ABSORBER	
GENERIC TYPE	PACKED TOWER
SPECIFIC TYPE	STATIC BED PACKING
TRADE NAME/COMMON TYPE	MARBLE-BED SCRUBBER
SHELL GENERIC MATERIAL	NR
SHELL SPECIFIC MATERIAL	NR
SHELL MATERIAL TRADE NAME/COMMON TYPE	NR
LINER GENERIC MATERIAL	NR
LINER SPECIFIC MATERIAL	NR
LINER MATERIAL TRADE NAME/COMMON TYPE	NR
** MIST ELIMINATOR	
PRE-MIST ELIMINATOR/MIST ELIMINATOR	NR
GENERIC TYPE	NR
SPECIFIC TYPE	NR
TRADE NAME/COMMON TYPE	NR
CONSTRUCTION MATERIAL GENERIC TYPE	NR
CONSTRUCTION MATERIAL SPECIFIC TYPE	NR
** REHEATER	
GENERIC TYPE	NR
SPECIFIC TYPE	NR
TRADE NAME/COMMON TYPE	NR
CONSTRUCTION MATERIAL GENERIC TYPE	NR
CONSTRUCTION MATERIAL SPECIFIC TYPE	NR
** DAMPERS	
FUNCTION	NR
GENERIC TYPE	NR
SPECIFIC TYPE	NR
CONSTRUCTION MATERIAL GENERIC TYPE	NR
CONSTRUCTION MATERIAL SPECIFIC TYPE	NR
LINER GENERIC MATERIAL TYPE	NR
LINER SPECIFIC MATERIAL TYPE	NR
** DUCTWORK	
SHELL GENERIC MATERIAL TYPE	NR
SHELL SPECIFIC MATERIAL TYPE	NR
LINER GENERIC MATERIAL TYPE	NR
LINER SPECIFIC MATERIAL TYPE	NR
** REAGENT PREPARATION EQUIPMENT	
FUNCTION	WET BALL MILL
DEVICE	NR
DEVICE TYPE	NR
** SOLIDS CONCENTRATING/DEWATERING	
DEVICE	NR
*** SLUDGE	
** TREATMENT	
METHOD	NR
DEVICE	NR
PROPRIETARY PROCESS	NR
** DISPOSAL	
NATURE	FINAL
TYPE	NR
SITE TREATMENT	NR
** WATER BALANCE	
WATER LOOP TYPE	CLOSED

UNION ELECTRIC: MEREMAC 2 (CONT.)

PERFORMANCE DATA

PERIOD	MODULE	AVAILABILITY	OPERABILITY	RELIABILITY	UTILIZATION	% REMOVAL SO2	% REMOVAL PART.	PER HOURS	BOILER HOURS	FGD HOURS	CAP. FACTOR
3/68	SYSTEM							744			

** PROBLEMS/SOLUTIONS/COMMENTS

THE FIRST COMMERCIAL SCRUBBER APPLICATION ON A UTILITY COAL-FIRED BOILER OCCURRED AT THIS STATION IN EARLY 1968.

THE PROBLEMS ENCOUNTERED DURING OPERATION OF THIS SYSTEM INCLUDED BOILER TUBE FOULING BECAUSE OF THE CLOSE TUBE SPACING, WIDESPREAD SCALING, SEVERE CORROSION, INEFFICIENT MIST ELIMINATOR AND PROBLEMS WITH WASTE DISPOSAL.

THE SCRUBBING PROGRAM WAS EVENTUALLY TERMINATED AND THE INSTALLATION WAS ABANDONED.

APPENDIX A

FGD SYSTEM COST DATA: OPERATIONAL AND NONOPERATIONAL SYSTEMS

INTRODUCTION

The cost of flue gas desulfurization (FGD) systems is an area of intense interest and substantial controversy and few realistic cost figures have been established. Many cost figures (both capital and annual) are largely site-sensitive values. Such figures cannot be compared from one system to another because they refer to different FGD battery limits and different years in which the expenditures were made. This cost analysis was undertaken because of these concerns and the lack of comparable cost data.

Analysis is made only for operating FGD systems in this study because they potentially have complete and accurate economic data. Adjustments are made to provide comparable, accurate cost data for the sulfur dioxide portion of the emission control system. This, in effect, eliminates much of the confusion that exists concerning the reported data, and it provides a common basis for the reported costs.

The reported figures are acquired from various sources. Much of the information was obtained from a previous cost study initiated by PEDCo Environmental in March 1978. In this first study each utility having at least one operational FGD system at

the time was given a cost form containing all available cost information then in the PEDCo files. The utility was asked to verify the data and fill in any missing information. The PEDCo Environmental staff made a follow-up visit to complete and verify the data collected. Results of the cost analysis were then forwarded to each participating utility for final review and comment.

For this cost analysis, the primary source of reported cost information was the 1978 DOE Form 67 (a number of 1979 and 1980 forms were also used as available). Utilities are generally required to complete this form, which includes capital and annual costs, once per year for operating stations. Although the information included in the DOE Form 67 is not as specific and is formatted differently from the PEDCo forms, the figures were fitted as well as possible.

Some costs were also taken from FGD cost survey questionnaires developed by Edison Electric Institute. The EEI forms contain useful capital cost information, however, in some cases the costs were projections rather than actual dollar expenditures.

In addition to the sources just mentioned, some 1978, 1979, and 1980 annual costs were made available by a few utilities via written transmittals and telephone communications.

Draft forms were assembled based on these sources and sent to each utility involved in this study. Each utility was then contacted and asked to respond as to the validity of the figures.

included in the drafts. Corrections were then made and it was assumed that the figures collected provided a firm base to make adjustments. In general, it was possible to determine the scope of the reported costs so that estimates could be made for missing costs, and non-FGD-related costs could be deleted. In cases where this was not possible, assumptions were made as to what items were and what were not included in the total figures, and the adjustments were based on these assumptions.

The adjustment procedure is summarized below:

CAPITAL COSTS

- All costs associated with control of particulate matter emissions are deducted.
- Capital costs for modifications necessitated by installation of an FGD system are added if they were not included in the reported costs.
- Sludge disposal costs are adjusted to reflect a 20-year life span for retrofit FGD systems and a 30-year life span for new FGD systems.
- Any unreported direct and indirect costs incurred are estimated and included.
- All capital costs are escalated to 1981 dollars.
- All $/kW values reflect the gross generating capacity of the unit.

ANNUAL COSTS

- All non-labor costs are adjusted to a common 65 percent capacity factor.
- Direct costs that were not reported are estimated and added.
- Overhead and fixed costs that were not reported are estimated and added.

- All annual costs are escalated to 1981 dollars.
- The final mills/kWh figure for each cost study is based on a standard 65 percent capacity factor and the net generating capacity of the unit.

A more complete description of the cost adjustment procedure may be found in the section titled Cost Adjustment Procedure and Background of this Appendix (Page A-9). The results of the cost analysis are listed in the section that follows. Section A-1 summarizes the reported and adjusted capital and annual costs for all the operational FGD systems that were addressed in the cost study. Section A-2 summarizes available cost data for nonoperational FGD systems.

RESULTS OF THE COST ANALYSIS

The results of the operational FGD system survey are summarized in Tables A-1 and A-2. Table A-1 summarizes the reported and adjusted capital and annual costs for all the operational FGD systems addressed in the survey. Table A-2 provides a summary of a categorical analysis of the reported and adjusted capital and annual costs for the operational FGD systems addressed in the survey. Included in this categorical analysis are the ranges, means, and standard deviation for all the various types and categories of FGD systems examined.

TABLE A-1. REPORTED AND ADJUSTED CAPITAL AND ANNUAL COSTS FOR OPERATIONAL FGD SYSTEMS

	Reported				Adjusted			
	Capital	$/kw	Annual	Mills/kwh	Capital	$/kw	Annual	Mills/kwh
Alabama Electric								
Tombigbee 2	6,921,100	27 4	434,929	0 33	9,756,200	38 3	4,249 650	3 18
Tombigbee 3	6,992,100	27 4	434,929	0 33	9,756,200	38 3	4,249,650	3 18
Arizona Electric Power								
Apache 2	8,148 069	41 8	51,784	0 10	13,171,700	67 5	3,739 900	3 75
Apache 3	7,214,052	37 0	51,784	0 10	11,661,900	59 8	3 739 900	3 75
Arizona Public Service								
Cholla 1	6,550,000	52 0	NA	NA	10,246,100	81 3	4 608 800	4 79
Cholla 2	44,352,000	168 0	1,003,568	0 75	42,787,600	162 1	10,998,100	8 22
Central Illinois Light								
Duck Creek 1	31,125,000	74 8	10,851,000	5 04	55,001,000	132 2	12,433,100	5 78
Central Illinois Public Service								
Newton 1	107,831,000	174 8	NA	NA	162,847,600	263 9	45,624,900	13 94
Colorado Ute Electric								
Craig 1	38,613,500	86 5	462,600	0 53	48,179,000	105 9	12,148,300	5 33
Craig 2	32,810,500	73 5	1,128,400	0 48	41,070,100	90 3	10,382,700	4 56
Columbus & Southern Ohio Electric								
Conesville 5	20,663,500	50 3	8,670,530	5 52	40,857,200	99 4	14,475,100	6 78
Conesville 6	20,663,500	50 3	8,670,530	5.52	40,857,200	99 4	14,475,100	6 78
Cooperative Power Association								
Coal Creek 1	23,650,000	43 4	1,166,200	0 41	28,633,100	52 5	8,414,350	2 99
Coal Creek 2	23,650,000	43.4	1,166,200	0 41	28,633,100	52.5	8,414,350	2 99
Duquesne Light								
Elrama 1-4	61,320,000	120 2	21,027,451	7.18	95,755,400	187 8	35,731,700	12 89
Phillips 1-6	52,055,000	127 0	18,301,000	11 00	86,097,500	210.0	35,731,700	17 65
Indianapolis Power & Light								
Petersburg 3	55,820,000	104 9	NA	NA	86,227,500	162 1	28,565,000	9 74
Kansas City Power & Light								
Hawthorn 3	3,220,000	29 4	346,441	1 15	6,909,850	62 8	2,912,100	5 25
Hawthorn 4	3,220,000	29 4	346,441	1 15	6,909,850	62 8	2,912,100	5 25
LaCygne 1	46,900,000	53 7	8,060,047	5 38	87,498,400	100 1	52,735,300	11 29
Kansas Power & Light								
Jeffrey 1	27,306,900	37 9	321,000	0 11	39,710,500	55 9	9,353,200	2 42
Jeffrey 2	26,458,800	37 8	949,900	0 29	28,840,100	41 2	6,396,400	1 65
Kentucky Utilities								
Green River 1-3	3,966,155	62 0	364,005	5 20	7,510,600	117 8	3,754,800	10 99
Louisville Gas & Electric								
Cane Run 4	12,647,000	66 6	960,301	1 29	21,882,500	115 2	6,422 400	6 20
Cane Run 5	13,759,000	68 8	763,443	0 92	20,476,600	102 4	5,784 300	5 30
Cane Run 6	20,596,900	71 5	NA	NA	25,290,600	87 8	11,073,000	7 23
Mill Creek 1	17,661,500	55 0	NA	NA	21,627,800	60 4	8,107,100	4 26
Mill Creek 3	18,846,880	42 6	321,463	1 25	29,163,000	66 0	9,636,200	4 03
Paddy's Run 6	4,320,000	61.7	NA	NA	9,307,300	133 0	4,430,300	12 25
Minnesota Power & Light								
Clay Boswell 4	86,900,000	173 8	18,844,512	5 38	102,165,300	184 4	40,437,300	14 09
Minnkota Power								
Milton R Young 2	44,119,600	100 3	754,445	0 53	68,487,500	155 7	14,966,000	6 44
Monongahela Power								
Pleasants 1	81,452,400	119 1	5,532,800	1 46	104,562,000	152 9	27 951,300	7 94
Pleasants 2	81,452,400	119 1	5,532,800	1 46	104,562,000	152 9	27,951,300	7 94
Montana Power								
Colstrip 1	36,500,000	101 4	6,128,000	2 97	52,519,850	145 9	15,642,050	8 27
Colstrip 2	36,500,000	101 4	6,128,000	2 97	52,519,850	145 9	15,642,050	8 27
Nevada Power								
Reid Gardner 1	5,363,375	42 9	251,514	0 46	10,891,350	87 1	3,617,450	5 78
Reid Gardner 2	5,363,375	42 9	251,514	0 46	10,891,350	87 1	3,617,450	5 78
Reid Gardner 3	12,599,160	100 8	131,824	0 23	18,866,173	150 9	4,637,163	7 40
Northern Indiana Public Service								
Dean H Mitchell 11	18,192,040	157 4	2,414,589	13 02	29,431,808	254 6	11,129,239	20 79
Northern States Power								
Sherburne 1	34,892,020	49 3	2,716,759	0 75	73,854,486	102 6	21,018,195	5 43
Sherburne 2	34,982,020	49.3	2,716,759	0 75	73,854,486	102 6	21,018,195	5 43
Pacific Power & Light								
Jim Bridger 4	49,643,000	90.3	NA	NA	65,113,736	118.4	19,681,160	6 81
Pennsylvania Power								
Bruce Mansfield 1	110,639,000	120 7	9,979,900	3 28	132,234,039	144 2	53,122,918	11.31
Bruce Mansfield 2	110,639,000	120 6	9,979,900	3 28	132,234,039	144 2	53,122,918	11 31
Bruce Mansfield 3	195,857,200	213 6	11,575,300	3 11	166,043,400	181 1	48,255,200	10 27
Public Service of New Mexico								
San Juan 1	47,944,400	132 8	NA	NA	100,333,473	277 9	29 836,802	16 69
San Juan 2	47,985,000	137 1	NA	NA	98,777,569	282 2	29,423,764	16 89
Salt River Project								
Coronado 1	32,624,500	79 4	1,788,000	0 85	35,560,700	86 5	15,339,100	7 70
Coronado 2	32,624,500	79 4	1,788,000	0 85	35,560,700	86.5	15,339,100	7 70
South Carolina Public Service								
Winyah 2	6,646,098	23.7	527,000	0 29	13,148,872	47 0	2,697,896	1 84
Winyah 3	10,742,500	38 4	NA	NA	18,646,700	66 6	6,926,700	4 83
South Mississippi Electric Power								
R D Morrow, Sr 1	10,896,000	53 7	NA	NA	24,047,200	118 5	7,115,990	6 94
R D Morrow, Sr 2	10,896,000	53.7	NA	NA	24,047,200	118 5	7,115,990	6 94
Southern Illinois Power								
Marion 4	15,200,930	87.9	859,453	0 98	20,906,447	120.8	7,107,823	7 75
Southern Indiana Gas & Electric								
A B Brown 1	12,495,000	47 2	1,850,565	1.30	23,414,388	88 4	7,094,130	4 98
Springfield City Utilities								
Southwest 1	16,744,500	86.3	778,749	1.20	27,822,607	143 4	8,092,238	8 21
Springfield Water, Light & Power								
Dallman 3	34,923,800	170.4	4,381,500	4.68	39,829,200	194 3	15,913,700	14 56
Tennessee Valley Authority								
Widows Creek 8	47,900,000	87.1	14,578,400	7 76	86,968,828	158.1	21,379,071	7.28
Utah Power & Light								
Hunter 1	24,400,000	56 7	NA	NA	32,294,620	75 1	10,614,532	4 66
Hunter 2	25,880,000	60 2	1,072,600	0 32	31,225,000	72 6	10,355,700	4 55
Huntington 1	2,709,000	63 0	2,946,400	1 27	38,698,607	90 0	13,411,652	5 89

NA - Annual costs not available from the utility

TABLE A-2. CATEGORICAL RESULTS OF THE REPORTED AND ADJUSTED CAPITAL AND ANNUAL COSTS FOR OPERATIONAL FGD SYSTEMS

	Reported						Adjusted					
	Capital			Annual			Capital			Annual		
	Range, $/kW	Average, $/kW	σ	Range, mills/kWh	Average, mills/kWh	σ	Range, $/kW	Average, $/kW	σ	Range, mills/kWh	Average, mills/kWh	σ
All	23.7-213.6	80.2	44 3	0 1-13.0	2.3	2.8	38.3-282.2	118.8	58.1	1.6-20.8	7 6	4.1
New	23.7-213.6	80.4	46.1	0.1- 5.5	1.7	1.8	38.3-263.9	110.8	48.4	1.6-14.6	6.8	3.2
Retrofit	29.4-157.4	79.7	39.4	0.5-13.0	4.5	4.4	60.4-282.2	139.3	73.8	4.3-20.8	9.7	5.3
Saleable	132.8-185.0	153.1	20.6	13.0-13.0	13.0	0.0	254.6-282.2	271.6	12.1	16.7-20.8	18.1	1.9
Throwaway	23.7-213.6	75.8	41.5	0.1-11.3	2.1	2.4	38.3-263.9	110.9	47.6	1.6-17.6	7.0	3.4
Alkaline flyash/lime	43.4-173.8	93.9	44.0	0.4- 5.4	2.1	1.9	52.5-184.4	122.8	51.4	3.0-14.1	7.2	3.8
Alkaline flyash/ limestone	49.3- 49 3	49.3	0.0	0.8- 0.8	0 8	0.0	102.6-102.6	102.6	0.0	5.4- 5.4	5.4	0.0
Dual alkali	47.2-174.8	97.8	55.3	1.3- 1.3	1.3	0.0	87.8-263.9	146.7	82.9	5.0-13.9	8 7	3.8
Lime	29.4-213 6	81.8	43.7	0.3-11.3	3.2	2.7	60.4-210.0	116.5	44.2	4.0-17.6	8 1	3 6
Limestone	23.7-170.4	67.9	37.2	0.1- 7.8	1.6	2.2	38.3-194.3	98.9	44.0	1.6-14.6	6.1	3.1
Sodium carbonate	42.9-100.8	69.2	26.6	0.2- 0.5	0.4	0.1	87.1-150.9	110 9	26.4	5.8- 7.4	6.4	0 7
Wellman Lord	132.8-185.0	153.1	20.6	13.0-13.0	13.0	0.0	254.6-282.2	271.6	12.1	16.7-20.8	18.1	1.9

COST ADJUSTMENT PROCEDURE AND BACKGROUND

The cost data were treated solely to establish accurate costs for FGD systems, on a common basis, not to critique the design or reasonableness of the costs reported by any utility. Adjustments focus primarily on the following items:

- All capital costs are adjusted to mid-1981 dollars using the escalation factors shown in Table A-3. Actual costs were reported by utilities in dollar values for years 1970 to 1981. The total figure is broken down into dollars/year and each year total is escalated to 1981 dollars and totaled again. All capital costs, represented in dollars/kilowatt ($/kW), are expressed in terms of gross megawatts (MW).

- Gross unit capacity is used to express all FGD capital expenditures because the capital requirement of an FGD system is dependent on actual boiler size before derating for auxiliary and air quality control power requirements.

- Particulate control costs are deducted. Since the purpose of the study is to estimate the incremental cost for sulfur dioxide control, particulate control costs deducted using either data contained in the costs breakdowns or as a percentage of the total direct cost (capital and annual). The percentage reduction varies depending upon system design and operation.

- The capital costs associated with the modification or installation of equipment not part of the FGD system but needed for its proper functioning, are included (e.g., stack lining, modification to existing ductwork or fans, etc.).

- Indirect charges are adjusted to provide adequate funds for engineering, field expenses, legal expenses, insurance, interest during construction, allowance for startup, taxes, and contingency expenditures.

TABLE A-3. ESCALATION FACTORS

Year[a]	Capital investment[b]	Utilities[c]	Chemicals[d]	O&M labor[e]	Construction labor[f]
1970	0.537	0.238	0.550	0.540	0.542
1971	0.576	0.277	0.584	0.583	0.613
1972	0.600	0.321	0.603	0.630	0.669
1973	0.624	0.372	0.624	0.681	0.704
1974	0.738	0.496	0.733	0.735	0.768
1975	0.825	0.665	0.819	0.794	0.824
1976	0.875	0.762	0.866	0.857	0.887
1977	0.934	0.873	0.928	0.926	0.937
1978	1.000	1.000	1.000	1.000	1.000
1979	1.090	1.100	1.075	1.080	1.080
1980	1.188	1.210	1.156	1.166	1.166
1981	1.295	1.331	1.242	1.260	1.260
1982	1.412	1.464	1.335	1.360	1.360
1983	1.539	1.611	1.436	1.470	1.470
1984	1.677	1.772	1.543	1.587	1.587
1985	1.828	1.949	1.659	1.714	1.714

[a]Cost index is for mid year (June).

[b]Reference: Marshall and Swift.

[c]Includes fuel and electricity; reference: Department of Commerce.

[d]Reference: Bureau of Mines.

[e]Reference: Department of Labor.

[f]Reference: Engineering News Record.

- All annual costs, represented in mills/kilowatt-hour (mills/kWh), are expressed in terms of net megawatts (MW).

- Net unit capacity is used to express all FGD annual expenditures because the annual cost requirement of an FGD system is dependent on the actual number of kilowatt-hours (kWh) produced by the unit after derating for auxiliary and air quality control power requirements.

- All non-labor annual costs are adjusted to a common 65 percent capacity factor.

- Replacement power costs for retrofitted FGD systems* are not included since only a few utilities reported such costs and these were presented using a variety of methods.

- Sludge disposal costs are adjusted to reflect the costs of sulfur dioxide waste disposal only (i.e., excluding fly ash disposal except where usable as a sludge stabilizing agent) and to provide for disposal over the anticipated lifetime of the FGD system. This latter correction is necessary since several utilities reported costs for sludge disposal capacity that would last only a fraction of the FGD system life. The adjustments are based on a land cost of $2000/acre with a sludge depth of 50 ft in a clay-lined pond (clay is assumed to be available at the site).

- A 30-year life is assumed for all process and economic considerations for all new systems that were installed for the life of the unit. A 20-year life is assumed for all process and economic considerations for retrofit systems that were installed for the remaining portion of the life of the unit.**

---

*If an FGD system is retrofitted to an existing boiler the new electrical power demand of the FGD equipment will decrease the boiler net MW rating. Since the boiler was originally sized and designed to accommodate a certain grid demand, the utility may be forced to buy make-up power from the grid and/or increase the design capacity of planned boilers.

**The use of a 30-year service life for new units coincides with the conclusion of the National Power Survey of the Federal Power Commission which recognized this value as reasonable for steam-electric plants. A 20-year service life was assumed for all retrofit units even if the remaining life of the units is less than this value. Thus, two different rates are used and should be noted when making comparisons between new and retrofit systems.

- Regeneration and by-product recovery facility costs are added for those regenerable systems not reporting such costs.

To the extent possible, all cost adjustments are made using the previous assumptions developed by PEDCo Environmental. When cost data are inadequate, adjustments are made using process design data in conjunction with the previous cost assumptions. In some cases, adjustments are not possible because of insufficient data.

DESCRIPTION OF COST ELEMENTS

Capital costs consist of direct costs, indirect costs, and other capital costs (including contingency). Direct costs include the "bought-out" cost of the equipment, the cost of installation, and site development. Indirect costs include interest during construction, contractor's fees and expenses, engineering, legal expenses, taxes, insurance, allowance for start-up and shakedown, and spares. Contingency costs include those costs resulting from malfunctions, equipment alterations, and similar unforeseen sources. Other capital costs include the nondepreciable items of land and working capital.

Annual costs consist of direct costs, fixed costs, and overhead costs. Direct costs include the cost of raw materials, utilities, operating labor and supervision, and maintenance and repairs. Fixed costs include those of depreciation, interim replacement, insurance, taxes, and interest on borrowed capital. Overhead costs include those of plant and payroll expenses. The

various capital and annual cost components are discussed and defined in greater detail in the text that follows.

CAPITAL COSTS

Direct Capital Costs

The direct capital costs include the following elements:

- Equipment required for the FGD system. Table A-4 provides a summary of the major process equipment used in FGD systems.

- Installation of equipment, including foundations; steel work for support, buildings, piping and ducting for effluents, slurries, sludge, and make-up water, control panels, instrumentation, insulation of ducting, buildings, piping, and other equipment, painting and piling.

- Site development may include clearing and grading, construction of access roads and walkways, establishment of rail, barge, and/or truck facilities, and parking facilities.

Indirect Capital Costs

Indirect capital costs include the following elements:

- Interest accrued on borrowed capital during construction.

- Contractor's fee and expenses, including costs for field labor payroll; field office supervision; personnel; construction offices; temporary roadways; railroad trackage; maintenance and welding shops; parking lot; communications; temporary piping and electrical and sanitary facilities; safety security (fire, material, medical, etc.); construction tools and rental equipment; unloading and storage of materials; travel expenses; permits; licenses; taxes; insurance; overhead; legal liabilities; field testing of equipment; start-up; and labor relations.

- Engineering costs, including administrative, process, project, and general; design and related functions for specifications; bid analysis; special studies; cost analysis; accounting; reports; consultant fees; purchasing; procurement; travel expenses; living expenses; expediting; inspection; safety; communications; modeling; pilot plant studies (if required because of

TABLE A-4. MAJOR FGD SYSTEM EQUIPMENT SUMMARY

Category	Description
Material handling - raw materials	Equipment for the handling and transfer of raw materials includes unloading facilities, conveyors, storage areas and silos, vibrators, atmospheric emission control associated with these facilities, and related accessories
Feed preparation - raw materials	Equipment for the preparation of raw material to produce a feed slurry consists of feed weighers, crushers, grinders, classifiers, ball mills, mixing tanks, pumps, agitators, and related accessories
Sulfur dioxide absorption	Equipment for treating the flue gas includes absorbers, mist eliminators, hold tanks, agitators, circulating pumps, pond water return pumps, and related accessories
Flue gas reheat	Equipment required includes air, steam, or hot water heaters, condensate tanks, pumps, soot blowers, fans, fuel storage facilities, gas bypass equipment, and related accessories
Gas handling	Equipment to handle the boiler flue gas includes booster fans, ductwork, flue gas bypass system, turning vanes, supports, platforms, and related accessories
Sludge disposal	FGD systems that do not generate a salable product require solids/water separation equipment such as clarifiers, vacuum filters, centrifuges, sludge fixation equipment, and related accessories
Utilities	Equipment to supply power and water to the FGD equipment consists of switch-gear, breakers, transformers, piping, and related accessories
By-product handling	Equipment for processing the by-product of regenerable FGD systems may include a rotary kiln, fluid bed dryer, conveyor, storage silo, vibrator, combustion equipment and oil storage tanks, waste heat boilers, hammer mills, evaporators, crystallizers, strippers, tanks, agitators, pumps, compressors, sulfuric acid absorber and cooling, mist eliminator, pumps, acid coolers, tanks, etc.

(continued)

TABLE A-4 (continued)

Category	Description
Regeneration	Equipment for regeneration of the absorbing medium of an FGD system may consist of reactor vessels, material handling system, storage, weigh feeder, conveyor, rotary kiln, fluid bed calciner, dust collector, storage silo, vibrator, combustion equipment and oil storage tanks, waste heat boiler, hammer mill, evaporators, crystallizers, strippers, tanks, agitators, pumps, compressors, sulfuric acid absorber and cooling, mist eliminator, pumps, acid coolers, tanks, etc.
Purge treatment	Equipment for the removal of purge material (e.g., sodium sulfate) includes refrigeration, pumps, tanks, crystallizer, centrifuge, dryer, dust collector, conveyors, storage, and related equipment
Auxiliary	Equipment not directly related to the FGD system, but which may require design or modification to accommodate an FGD system may include such items as existing fans, ducts, or stack. If new fans, ducts, or stacks are added to improve boiler performance and accommodate the FGD system, the costs are prorated to the boiler and FGD system

process design or application novelty); royalty payments during construction; training of plant personnel; field engineering; safety engineering; and consultant services.

- Legal expenses, including those for securing permits, right-of-way, etc.

- Taxes, including sales, and excise taxes.

- Insurance covering liability for equipment in transit and at site; fire, casualty, injury, and death; damage to property; delay; and noncompliance.

- Allowance for start-up and shakedown includes the cost associated with system start-up.

- Spare parts including pumps, valves, controls, special piping and fittings, instruments, spray nozzles, and similar items.

Other Capital Costs

Other capital costs include the following elements:

- Contingency funds set aside for any necessary repairs and/or modifications not covered in projected direct expenditures.

- Land required for the FGD process, waste disposal, regeneration facility, and storage.

- Working capital, including the total amount of money invested in raw materials and supplies in stock, finished products in stock, and unfinished products in the process of being manufactured; accounts receivable; cash kept on hand for payment of operating expenses such as salaries, wages, and raw materials purchases; accounts payable; and taxes payable.

ANNUAL COSTS

The annual cost of an FGD system includes the following direct, fixed and overhead charges:

Direct Costs

- Raw materials, including those required by the FGD process for sulfur dioxide control, absorbent

regeneration, sludge treatment, sludge fixation, flocculants, etc.

- Utilities, including water for slurries, cooling and cleaning; electricity for pumps, fans, valves, lighting controls, conveyors, and mixers; fuel for reheating of flue gases; and steam for processing.

- Operating labor, including supervision, skilled, and unskilled labor required to operate, monitor, and control the FGD process.

- Maintenance and repairs, consisting of both manpower and materials to keep the unit operating efficiently. The function of maintenance is both preventive and corrective to keep outages to a minimum.

- Byproduct sales, credit from the sale of byproducts regenerable FGD processes (e.g., sulfur, sulfuric acid) is a negative charge deducted from the annual direct cost to obtain the net annual direct cost of the FGD system.

Overhead

Plant and administrative overhead is a business expense that is not charged directly to a particular part of a project, but is allocated to it. Overhead costs include administrative, safety, engineering, legal and medical services; payroll; employee benefits; recreation; and public relations.

Fixed Charges

- Depreciation - the annual charge to recover direct and indirect costs of physical assets over the life of the asset.

- Interim replacement - costs expended for temporary or provisional replacement of equipment that has failed or malfunctioned prematurely.

- Insurance - including the costs of protection from loss by a specified contingency, peril, or unforeseen event. Required coverage could include losses due to fire, personel injury or death, property damage, explosion, lightning, or other natural phenomena.

- Taxes - including franchises, excise, and property taxes levied by a city, county, state, or Federal government.

- Interest - on borrowed funds.

Table A-5 provides a summary of the means used to determine the missing cost elements if the costs were not reported or insufficient information prevented their actual determination. The assumptions and cost bases for determining the capital and annual costs of FGD systems were developed by the PEDCo staff based upon previous economic studies conducted for the U.S. EPA (Flue Gas Desulfurization Process Cost Assessment, May 1975; Simplified Procedures for Estimating Flue Gas Desulfurization System Costs, June 1976, EPA-600/2-76-150; Particulate and Sulfur Dioxide Emission Control Costs for Large Coal-Fired Boilers, March 1978, EPA-600/7-78-032).

STANDARDIZED ADJUSTED ANNUAL COST

In an attempt to promote further comparability of the figures, the adjustment procedure was carried one step further and standardized adjusted figures were developed. This was done by modifying the fixed annual cost rates such that they would be identical for each unit (i.e., cost of depreciation, interim replacement, taxes, insurance, and capital costs). The newly adjusted total fixed annual cost rate was applied to the total adjusted capital cost in each case and a standardized adjusted annual cost was obtained.

TABLE A-5. COST ELEMENT FACTORS

Category	Value
Indirect capital costs:	
Interest during construction	10% of total direct capital costs
Field overhead	10% of total direct capital costs
Contractor's fee and expenses	5% of total direct capital costs
Engineering	10% of total direct capital costs
Taxes	2% of total direct capital costs
Spares	1% of total direct capital costs
Shakedown allowance	5% of total direct capital costs
Other capital costs:	
Contingency[a]	20% of total direct and indirect capital costs
Direct annual costs:	
Raw materials:	
Fixation chemicals	$60/ton
Lime[b]	$46/ton
Lime (magnesium promoted)	$62/ton $52/ton[c]
Limestone	$12/ton
Magnesium oxide	$300/ton
Sodium carbonate	$130/ton[d]
Salt cake (credit)	$50/ton
Sulfur (credit)	$87/ton
Sulfuric acid (credit)	$75/ton
Utilities:	
Electricity	$33 mills/kWh
Water	$0.26/$10^3$ gal
Steam	$1.60/$10^6$ Btu

(continued)

TABLE A-5 (continued)

Category	Value
Operating labor:	
Direct labor	$14.40/man-hour
Supervision	15% of direct labor costs
Maintenance:	
Labor and materials	4% of total direct capital costs
Supplies	15% of labor and materials costs
Overhead:	
Plant	50% of operation and maintenance costs
Payroll	20% of operating labor costs
Fixed annual costs:	
Depreciation	3.33% or 5% (new or retrofit)
Interim replacement[e]	0.7% or 0.35%
Taxes	4%
Insurance	0.3%
Capital costs	9%

[a] Contingency costs are used only when the cost data supplied are incomplete (such as equipment costs or direct costs only) and a contingency cost must be factored in to give an accurate estimate of the total capital cost.

[b] Estimated cost for carbide lime used by Louisville Gas and Electric was $13.30/ton in 1978. This was escalated to $15.40/ton for 1980.

[c] Long term contract (e.g., Dravo contract).

[d] Nevada Power reported a January 1982 soda ash cost of $115/ton delivered (transported from Trona, California to Moapa, Nevada). Montana-Dakota Utilities reported a cost of $151/ton (October 1981 dollars) delivered (transported from Green River, Wyoming to Beulah, North Dakota).

[e] Some system components have life spans less than the expected service life of the system. Interim replacement is an allowance factor used in estimating annual revenue requirements to provide for the replacement of these short-lived items. An average allowance of 0.35% of the total investment is normally provided and used for systems with an expected service life of 20 years or less. A higher allowance of 0.70% of the total investment is provided and used for systems with an expected service life of 30 years or more.

SECTION A-1
COSTS FOR OPERATIONAL FGD SYSTEMS

UNIT DESCRIPTION	COST DESCRIPTION	COST REPORTED	COST ADJUSTED	COST STANDARDIZED ADJUSTED
ALABAMA ELECTRIC	CAPACITY FACTOR, %	65	65	65
TOMBIGBEE 2	DIRECT CAPITAL, $	5826750.	**********	**********
NEW 255MW (GROSS)	INDIRECT CAPITAL, $	1165350.	**********	**********
STARTUP 9/78 179MW (ESC)	OTHER CAPITAL, $	**********	**********	**********
COAL	TOTAL CAPITAL, $/KW(YEAR)	27.4(1978)	39.3(1981)	******(0)
1.15 %S BITUMINOUS	DIRECT ANNUAL, $	434929.	2226150.	**********
LIMESTONE	OVERHEAD COST, $	**********	332750.	**********
PEABODY PROCESS SYSTEMS	FIXED CHARGES, $	**********	1690750.	**********
ENERGY CONSUMPTION: 3.1%	TOTAL ANNUAL, MILLS/KWH(YEAR)	.3(1978)	3.2(1981)	******(0)
ALABAMA ELECTRIC	CAPACITY FACTOR, %	65	65	65
TOMBIGBEE 3	DIRECT CAPITAL, $	5826750.	**********	**********
NEW 255MW (GROSS)	INDIRECT CAPITAL, $	1165350.	**********	**********
STARTUP 6/79 179MW (ESC)	OTHER CAPITAL, $	**********	**********	**********
COAL	TOTAL CAPITAL, $/KW(YEAR)	27.4(1978)	38.3(1981)	******(0)
1.15 %S BITUMINOUS	DIRECT ANNUAL, $	**********	2226150.	**********
LIMESTONE	OVERHEAD COST, $	434929.	332750.	**********
PEABODY PROCESS SYSTEMS	FIXED CHARGES, $	**********	1690750.	**********
ENERGY CONSUMPTION: 3.1%	TOTAL ANNUAL, MILLS/KWH(YEAR)	.3(1978)	3.2(1981)	******(0)
ARIZONA ELECTRIC POWER	CAPACITY FACTOR, %	65	65	65
APACHE 2	DIRECT CAPITAL, $	6154982.	**********	**********
NEW 195MW (GROSS)	INDIRECT CAPITAL, $	1895044.	**********	**********
STARTUP 8/78 98MW (ESC)	OTHER CAPITAL, $	78949.	**********	**********
COAL	TOTAL CAPITAL, $/KW(YEAR)	41.8(1977)	67.5(1981)	******(0)
.50 %S BITUMINOUS	DIRECT ANNUAL, $	48237.	1568150.	**********
LIMESTONE	OVERHEAD COST, $	3547.	19900.	**********
RESEARCH-COTTRELL	FIXED CHARGES, $	**********	2151850.	**********
ENERGY CONSUMPTION: 4.1%	TOTAL ANNUAL, MILLS/KWH(YEAR)	.1(1979)	3.8(1981)	******(0)
ARIZONA ELECTRIC POWER	CAPACITY FACTOR, %	65	65	65
APACHE 3	DIRECT CAPITAL, $	5449433.	**********	**********
NEW 195MW (GROSS)	INDIRECT CAPITAL, $	1677814.	**********	**********
STARTUP 6/79 98MW (ESC)	OTHER CAPITAL, $	69899.	**********	**********
COAL	TOTAL CAPITAL, $/KW(YEAR)	37.0(1977)	59.8(1981)	******(0)
.50 %S BITUMINOUS	DIRECT ANNUAL, $	48237.	1568150.	**********
LIMESTONE	OVERHEAD COST, $	3547.	19900.	**********
RESEARCH-COTTRELL	FIXED CHARGES, $	**********	2151850.	**********
ENERGY CONSUMPTION: 4.1%	TOTAL ANNUAL, MILLS/KWH(YEAR)	.1(1979)	3.8(1981)	******(0)
ARIZONA PUBLIC SERVICE	CAPACITY FACTOR, %	***	65	65
CHOLLA 1	DIRECT CAPITAL, $	**********	**********	**********
RETROFIT 119MW (GROSS)	INDIRECT CAPITAL, $	**********	**********	**********
STARTUP 10/73 119MW (ESC)	OTHER CAPITAL, $	**********	**********	**********
COAL	TOTAL CAPITAL, $/KW(YEAR)	52.0(1973)	81.3(1981)	******(0)
.50 %S BITUMINOUS	DIRECT ANNUAL, $	**********	2049200.	**********
LIMESTONE	OVERHEAD COST, $	**********	561600.	**********
RESEARCH-COTTRELL	FIXED CHARGES, $	**********	1998000.	**********
ENERGY CONSUMPTION: 3.4%	TOTAL ANNUAL, MILLS/KWH(YEAR)	******(1978)	4.8(1981)	******(0)
ARIZONA PUBLIC SERVICE	CAPACITY FACTOR, %	65	65	65
CHOLLA 2	DIRECT CAPITAL, $	**********	**********	**********
NEW 264MW (GROSS)	INDIRECT CAPITAL, $	**********	**********	**********
STARTUP 4/78 264MW (ESC)	OTHER CAPITAL, $	**********	**********	**********
COAL	TOTAL CAPITAL, $/KW(YEAR)	168.0(1977)	162.1(1981)	******(0)
.50 %S BITUMINOUS	DIRECT ANNUAL, $	1003568.	30314...	**********
LIMESTONE	OVERHEAD COST, $	**********	551800.	**********
RESEARCH-COTTRELL	FIXED CHARGES, $	**********	7415100.	**********
ENERGY CONSUMPTION: ****%	TOTAL ANNUAL, MILLS/KWH(YEAR)	.8(1978)	8.2(1981)	******(0)

****** INDICATES COST FIGURES NOT YET AVAILABLE

SECTION A-1
COSTS FOR OPERATIONAL FGD SYSTEMS

UNIT DESCRIPTION	COST DESCRIPTION	COST REPORTED	COST ADJUSTED	COST STANDARDIZED ADJUSTED
ARIZONA PUBLIC SERVICE	CAPACITY FACTOR, %	***	65	65
CHOLLA 4	DIRECT CAPITAL, $	28000000.	**********	**********
NEW 375MW (GROSS)	INDIRECT CAPITAL, $	**********	**********	**********
STARTUP 3/81 126MW (ESC)	OTHER CAPITAL, $	**********	**********	**********
COAL	TOTAL CAPITAL, $/KW(YEAR)	80.0(0)	******(0)	******(0)
.50 %S	DIRECT ANNUAL, $	**********	**********	**********
LIMESTONE	OVERHEAD COST, $	**********	**********	**********
RESEARCH-COTTRELL	FIXED CHARGES, $	**********	**********	**********
ENERGY CONSUMPTION: ****%	TOTAL ANNUAL, MILLS/KWH(YEAR)	******(0)	******(0)	******(0)
BASIN ELECTRIC POWER	CAPACITY FACTOR, %	***	65	65
LARAMIE RIVER 1	DIRECT CAPITAL, $	33600000.	**********	**********
NEW 570MW (GROSS)	INDIRECT CAPITAL, $	**********	**********	**********
STARTUP 7/80 570MW (ESC)	OTHER CAPITAL, $	**********	**********	**********
COAL	TOTAL CAPITAL, $/KW(YEAR)	56.0(1980)	******(0)	******(0)
.81 %S SUBBITUMINOUS	DIRECT ANNUAL, $	2818530.	**********	**********
LIMESTONE	OVERHEAD COST, $	**********	**********	**********
RESEARCH-COTTRELL	FIXED CHARGES, $	**********	**********	**********
ENERGY CONSUMPTION: ****%	TOTAL ANNUAL, MILLS/KWH(YEAR)	.9(7800)	******(0)	******(0)
BASIN ELECTRIC POWER	CAPACITY FACTOR, %	***	65	65
LARAMIE RIVER 2	DIRECT CAPITAL, $	33600000.	**********	**********
NEW 570MW (GROSS)	INDIRECT CAPITAL, $	**********	**********	**********
STARTUP 7/81 570MW (ESC)	OTHER CAPITAL, $	**********	**********	**********
COAL	TOTAL CAPITAL, $/KW(YEAR)	56.0(1980)	******(0)	******(0)
.81 %S SUBBITUMINOUS	DIRECT ANNUAL, $	2818530.	**********	**********
LIMESTONE	OVERHEAD COST, $	**********	**********	**********
RESEARCH-COTTRELL	FIXED CHARGES, $	**********	**********	**********
ENERGY CONSUMPTION: ****%	TOTAL ANNUAL, MILLS/KWH(YEAR)	.9(7800)	******(0)	******(0)
BIG RIVERS ELECTRIC	CAPACITY FACTOR, %	***	65	65
GREEN 1	DIRECT CAPITAL, $	10454400.	**********	**********
NEW 242MW (GROSS)	INDIRECT CAPITAL, $	**********	**********	**********
STARTUP 12/79 242MW (ESC)	OTHER CAPITAL, $	**********	**********	**********
COAL	TOTAL CAPITAL, $/KW(YEAR)	43.2(1976)	******(0)	******(0)
3.75 %S BITUMINOUS	DIRECT ANNUAL, $	**********	**********	**********
LIME	OVERHEAD COST, $	**********	**********	**********
AMERICAN AIR FILTER	FIXED CHARGES, $	**********	**********	**********
ENERGY CONSUMPTION: ****%	TOTAL ANNUAL, MILLS/KWH(YEAR)	******(0)	******(0)	******(0)
CENTRAL ILLINOIS LIGHT	CAPACITY FACTOR, %	65	65	65
DUCK CREEK 1	DIRECT CAPITAL, $	**********	**********	**********
NEW 416MW (GROSS)	INDIRECT CAPITAL, $	**********	**********	**********
STARTUP 7/76 416MW (ESC)	OTHER CAPITAL, $	**********	**********	**********
COAL	TOTAL CAPITAL, $/KW(YEAR)	74.8(1977)	132.2(1981)	******(0)
3.66 %S BITUMINOUS	DIRECT ANNUAL, $	5163000.	5634500.	**********
LIMESTONE	OVERHEAD COST, $	**********	600000.	**********
ENVIRONEERING, RILEY STOKER	FIXED CHARGES, $	**********	6198600.	**********
ENERGY CONSUMPTION: 2.9%	TOTAL ANNUAL, MILLS/KWH(YEAR)	5.0(1980)	5.8(1981)	******(0)
CENTRAL ILLINOIS PUBLIC SERV	CAPACITY FACTOR, %	***	65	65
NEWTON 1	DIRECT CAPITAL, $	**********	**********	**********
NEW 617MW (GROSS)	INDIRECT CAPITAL, $	**********	**********	**********
STARTUP 9/79 617MW (ESC)	OTHER CAPITAL, $	**********	**********	**********
COAL	TOTAL CAPITAL, $/KW(YEAR)	174.8(1978)	263.9(1981)	******(0)
2.25 %S BITUMINOUS	DIRECT ANNUAL, $	**********	13332000.	**********
DUAL ALKALI	OVERHEAD COST, $	**********	4017400.	**********
GE ENVIRONMENTAL SERVICES	FIXED CHARGES, $	**********	28221500.	**********
ENERGY CONSUMPTION: 2.4%	TOTAL ANNUAL, MILLS/KWH(YEAR)	******(0)	13.9(1981)	******(0)

****** INDICATES COST FIGURES NOT YET AVAILABLE

SECTION A-1
COSTS FOR OPERATIONAL FGD SYSTEMS

UNIT DESCRIPTION	COST DESCRIPTION	COST REPORTED	COST ADJUSTED	COST STANDARDIZED ADJUSTED
CINCINNATI GAS & ELECTRIC	CAPACITY FACTOR, %	***	65	65
EAST BEND 2	DIRECT CAPITAL, $	78000000.	**********	**********
NEW 650MW (GROSS)	INDIRECT CAPITAL, $	**********	**********	**********
STARTUP 3/81 650MW (ESC)	OTHER CAPITAL, $	**********	**********	**********
COAL	TOTAL CAPITAL, $/KW(YEAR)	120.0(0)	******(0)	******(0)
3.00 %S	DIRECT ANNUAL, $	11718252.	**********	**********
LIME	OVERHEAD COST, $	**********	**********	**********
BABCOCK & WILCOX	FIXED CHARGES, $	**********	**********	**********
ENERGY CONSUMPTION: 2.9%	TOTAL ANNUAL, MILLS/KWH(YEAR)	3.4(7800)	******(0)	******(0)
COLORADO UTE ELECTRIC	CAPACITY FACTOR, %	***	65	65
CRAIG 1	DIRECT CAPITAL, $	38613500.	**********	**********
NEW 455MW (GROSS)	INDIRECT CAPITAL, $	**********	**********	**********
STARTUP 10/80 410MW (ESC)	OTHER CAPITAL, $	**********	**********	**********
COAL	TOTAL CAPITAL, $/KW(YEAR)	86.5(1979)	105.9(1981)	******(0)
.45 %S SUBBITUMINOUS	DIRECT ANNUAL, $	462600.	3624500.	**********
LIMESTONE	OVERHEAD COST, $	**********	174400.	**********
PEABODY PROCESS SYSTEMS	FIXED CHARGES, $	**********	8349400.	**********
ENERGY CONSUMPTION: 1.3%	TOTAL ANNUAL, MILLS/KWH(YEAR)	.5(1980)	5.3(1981)	******(0)
COLORADO UTE ELECTRIC	CAPACITY FACTOR, %	***	65	65
CRAIG 2	DIRECT CAPITAL, $	32810500.	**********	**********
NEW 455MW (GROSS)	INDIRECT CAPITAL, $	**********	**********	**********
STARTUP 12/79 410MW (ESC)	OTHER CAPITAL, $	**********	**********	**********
COAL	TOTAL CAPITAL, $/KW(YEAR)	73.5(1979)	90.3(1981)	******(0)
.45 %S SUBBITUMINOUS	DIRECT ANNUAL, $	1128400.	3036100.	**********
LIMESTONE	OVERHEAD COST, $	**********	229200.	**********
PEABODY PROCESS SYSTEMS	FIXED CHARGES, $	**********	7117400.	**********
ENERGY CONSUMPTION: -2.0%	TOTAL ANNUAL, MILLS/KWH(YEAR)	.5(1980)	4.6(1981)	******(0)
COLUMBUS & SOUTHERN OHIO ELEC	CAPACITY FACTOR, %	48	65	65
CONESVILLE 5	DIRECT CAPITAL, $	20663500.	32044850.	**********
NEW 411MW (GROSS)	INDIRECT CAPITAL, $	**********	8812350.	**********
STARTUP 1/77 411MW (ESC)	OTHER CAPITAL, $	**********	**********	**********
COAL	TOTAL CAPITAL, $/KW(YEAR)	50.3(1975)	99.4(1981)	******(0)
4.67 %S BITUMINOUS	DIRECT ANNUAL, $	4724280.	6978350.	**********
LIME	OVERHEAD COST, $	443800.	559200.	**********
AIR CORRECTION DIVISION, UOP	FIXED CHARGES, $	**********	6937550.	**********
ENERGY CONSUMPTION: 3.9%	TOTAL ANNUAL, MILLS/KWH(YEAR)	5.5(1978)	6.8(1981)	******(0)
COLUMBUS & SOUTHERN OHIO ELEC	CAPACITY FACTOR, %	48	65	65
CONESVILLE 6	DIRECT CAPITAL, $	20663500.	32044850.	**********
NEW 411MW (GROSS)	INDIRECT CAPITAL, $	**********	8812350.	**********
STARTUP 6/78 411MW (ESC)	OTHER CAPITAL, $	**********	**********	**********
COAL	TOTAL CAPITAL, $/KW(YEAR)	50.3(1975)	99.4(1981)	******(0)
4.67 %S BITUMINOUS	DIRECT ANNUAL, $	4724280.	6978350.	**********
LIME	OVERHEAD COST, $	443800.	559200.	**********
AIR CORRECTION DIVISION, UOP	FIXED CHARGES, $	**********	6937550.	**********
ENERGY CONSUMPTION: 3.9%	TOTAL ANNUAL, MILLS/KWH(YEAR)	5.5(1978)	6.8(1981)	******(0)
COMMONWEALTH EDISON	CAPACITY FACTOR, %	***	65	65
POWERTON 51	DIRECT CAPITAL, $	56250000.	**********	**********
RETROFIT 450MW (GROSS)	INDIRECT CAPITAL, $	**********	**********	**********
STARTUP 4/80 450MW (ESC)	OTHER CAPITAL, $	**********	**********	**********
COAL	TOTAL CAPITAL, $/KW(YEAR)	125.0(1979)	******(0)	******(0)
3.53 %S	DIRECT ANNUAL, $	**********	**********	**********
LIMESTONE	OVERHEAD COST, $	**********	**********	**********
AIR CORRECTION DIVISION, UOP	FIXED CHARGES, $	**********	**********	**********
ENERGY CONSUMPTION: 5.6%	TOTAL ANNUAL, MILLS/KWH(YEAR)	******(0)	******(0)	******(0)

****** INDICATES COST FIGURES NOT YET AVAILABLE

SECTION A-1
COSTS FOR OPERATIONAL FGD SYSTEMS

UNIT DESCRIPTION	COST DESCRIPTION	COST REPORTED	COST ADJUSTED	COST STANDARDIZED ADJUSTED
COOPERATIVE POWER ASSOCIATION	CAPACITY FACTOR, %	***	65	65
COAL CREEK 1	DIRECT CAPITAL, $	23650000.	23469750.	**********
NEW 545MW (GROSS)	INDIRECT CAPITAL, $	**********	5163350.	**********
STARTUP 7/79 327MW (ESC)	OTHER CAPITAL, $	**********	**********	**********
COAL	TOTAL CAPITAL, $/KW(YEAR)	43.4(1979)	52.5(1981)	******(0)
.63 %S LIGNITE	DIRECT ANNUAL, $	1166200.	3156450.	**********
LIME/ALKALINE FLYASH	OVERHEAD COST, $	**********	295800.	**********
COMBUSTION ENGINEERING	FIXED CHARGES, $	**********	4962100.	**********
ENERGY CONSUMPTION: ****%	TOTAL ANNUAL, MILLS/KWH(YEAR)	.4(1981)	3.0(1981)	******(0)
COOPERATIVE POWER ASSOCIATION	CAPACITY FACTOR, %	***	65	65
COAL CREEK 2	DIRECT CAPITAL, $	23650000.	23469750.	**********
NEW 545MW (GROSS)	INDIRECT CAPITAL, $	**********	5163350.	**********
STARTUP 7/80 327MW (ESC)	OTHER CAPITAL, $	**********	**********	**********
COAL	TOTAL CAPITAL, $/KW(YEAR)	43.4(1979)	52.5(1981)	******(0)
.63 %S LIGNITE	DIRECT ANNUAL, $	1166200.	3156450.	**********
LIME/ALKALINE FLYASH	OVERHEAD COST, $	**********	295800.	**********
COMBUSTION ENGINEERING	FIXED CHARGES, $	**********	4962100.	**********
ENERGY CONSUMPTION: ****%	TOTAL ANNUAL, MILLS/KWH(YEAR)	.4(1981)	3.0(1981)	******(0)
DUQUESNE LIGHT	CAPACITY FACTOR, %	69	65	65
ELRAMA 1-4	DIRECT CAPITAL, $	**********	**********	**********
RETROFIT 510MW (GROSS)	INDIRECT CAPITAL, $	**********	**********	**********
STARTUP 10/75 510MW (ESC)	OTHER CAPITAL, $	**********	**********	**********
COAL	TOTAL CAPITAL, $/KW(YEAR)	120.2(1976)	187.8(1981)	******(0)
2.20 %S	DIRECT ANNUAL, $	13441451.	13451500.	**********
LIME	OVERHEAD COST, $	**********	4479300.	**********
GE ENVIRONMENTAL SERVICES	FIXED CHARGES, $	**********	17800900.	**********
ENERGY CONSUMPTION: 3.5%	TOTAL ANNUAL, MILLS/KWH(YEAR)	7.2(1979)	12.9(1981)	******(0)
DUQUESNE LIGHT	CAPACITY FACTOR, %	55	65	65
PHILLIPS 1-6	DIRECT CAPITAL, $	**********	**********	**********
RETROFIT 408MW (GROSS)	INDIRECT CAPITAL, $	**********	**********	**********
STARTUP 7/73 408MW (ESC)	OTHER CAPITAL, $	**********	**********	**********
COAL	TOTAL CAPITAL, $/KW(YEAR)	127.0(1972)	210.0(1981)	******(0)
2.05 %S BITUMINOUS	DIRECT ANNUAL, $	11886000.	13309400.	**********
LIME	OVERHEAD COST, $	**********	4356200.	**********
GE ENVIRONMENTAL SERVICES	FIXED CHARGES, $	**********	16005500.	**********
ENERGY CONSUMPTION: 3.4%	TOTAL ANNUAL, MILLS/KWH(YEAR)	11.3(1979)	17.6(1981)	******(0)
HOOSIER ENERGY	CAPACITY FACTOR, %	***	65	65
MEROM 2	DIRECT CAPITAL, $	24500000.	**********	**********
NEW 490MW (GROSS)	INDIRECT CAPITAL, $	**********	**********	**********
STARTUP 12/81 441MW (ESC)	OTHER CAPITAL, $	**********	**********	**********
COAL	TOTAL CAPITAL, $/KW(YEAR)	50.0(0)	******(0)	******(0)
3.50 %S	DIRECT ANNUAL, $	**********	**********	**********
LIMESTONE	OVERHEAD COST, $	**********	**********	**********
MITSUBISHI HEAVY INDUSTRIES	FIXED CHARGES, $	**********	**********	**********
ENERGY CONSUMPTION: ****%	TOTAL ANNUAL, MILLS/KWH(YEAR)	******(0)	******(0)	******(0)
INDIANAPOLIS POWER & LIGHT	CAPACITY FACTOR, %	***	65	65
PETERSBURG 3	DIRECT CAPITAL, $	**********	**********	**********
NEW 532MW (GROSS)	INDIRECT CAPITAL, $	**********	**********	**********
STARTUP 12/77 532MW (ESC)	OTHER CAPITAL, $	**********	**********	**********
COAL	TOTAL CAPITAL, $/KW(YEAR)	104.9(1976)	162.1(1981)	******(0)
3.25 %S BITUMINOUS	DIRECT ANNUAL, $	**********	13042700.	**********
LIMESTONE	OVERHEAD COST, $	**********	3338400.	**********
AIR CORRECTION DIVISION, UOP	FIXED CHARGES, $	**********	12183900.	**********
ENERGY CONSUMPTION: 2.4%	TOTAL ANNUAL, MILLS/KWH(YEAR)	******(1978)	9.7(1981)	******(0)

****** INDICATES COST FIGURES NOT YET AVAILABLE

SECTION A-1
COSTS FOR OPERATIONAL FGD SYSTEMS

UNIT DESCRIPTION	COST DESCRIPTION	COST REPORTED	COST ADJUSTED	COST STANDARDIZED ADJUSTED
KANSAS CITY POWER & LIGHT	CAPACITY FACTOR, %	35	65	65
HAWTHORN 3	DIRECT CAPITAL, $	**********	**********	**********
RETROFIT 90MW (GROSS)	INDIRECT CAPITAL, $	**********	**********	**********
STARTUP 11/72 90MW (ESC)	OTHER CAPITAL, $	**********	**********	**********
COAL	TOTAL CAPITAL, $/KW(YEAR)	29.4(1972)	62.8(1981)	******(0)
.60 %S BITUMINOUS	DIRECT ANNUAL, $	346441.	1466300.	**********
LIME	OVERHEAD COST, $	**********	314700.	**********
COMBUSTION ENGINEERING	FIXED CHARGES, $	**********	1131100.	**********
ENERGY CONSUMPTION: 2.2%	TOTAL ANNUAL, MILLS/KWH(YEAR)	1.1(1978)	5.2(1981)	******(0)
KANSAS CITY POWER & LIGHT	CAPACITY FACTOR, %	35	65	65
HAWTHORN 4	DIRECT CAPITAL, $	**********	**********	**********
PETPOFIT 90MW (GROSS)	INDIRECT CAPITAL, $	**********	**********	**********
STARTUP 8/72 90MW (ESC)	OTHER CAPITAL, $	**********	**********	**********
COAL	TOTAL CAPITAL, $/KW(YEAR)	29.4(1972)	62.8(1981)	******(0)
.60 %S BITUMINOUS	DIRECT ANNUAL, $	346441.	1466300.	**********
LIME	OVERHEAD COST, $	**********	314700.	**********
COMBUSTION ENGINEERING	FIXED CHARGES, $	**********	1131100.	**********
ENERGY CONSUMPTION: 2.2%	TOTAL ANNUAL, MILLS/KWH(YEAR)	1.1(1978)	5.2(1981)	******(0)
KANSAS CITY POWER & LIGHT	CAPACITY FACTOR, %	21	65	65
LA CYGNE 1	DIRECT CAPITAL, $	**********	**********	**********
NEW 874MW (GROSS)	INDIRECT CAPITAL, $	**********	**********	**********
STARTUP 2/73 874MW (ESC)	OTHER CAPITAL, $	**********	**********	**********
COAL	TOTAL CAPITAL, $/KW(YEAR)	53.7(1972)	100.1(1981)	******(0)
5.39 %S SUBBITUMINOUS	DIRECT ANNUAL, $	8060047.	28360400.	**********
LIMESTONE	OVERHEAD COST, $	**********	9211400.	**********
BABCOCK & WILCOX	FIXED CHARGES, $	**********	15163500.	**********
ENERGY CONSUMPTION: 3.2%	TOTAL ANNUAL, MILLS/KWH(YEAR)	5.4(1979)	11.3(1981)	******(0)
KANSAS POWER & LIGHT	CAPACITY FACTOR, %	50	65	65
JEFFREY 1	DIRECT CAPITAL, $	25530000.	**********	**********
NEW 720MW (GROSS)	INDIRECT CAPITAL, $	1776900.	**********	**********
STARTUP 8/78 540MW (ESC)	OTHER CAPITAL, $	**********	**********	**********
COAL	TOTAL CAPITAL, $/KW(YEAR)	37.9(1978)	55.9(1981)	******(0)
.32 %S	DIRECT ANNUAL, $	321000.	2350100.	**********
LIMESTONE	OVERHEAD COST, $	**********	121300.	**********
COMBUSTION ENGINEERING	FIXED CHARGES, $	**********	6881800.	**********
ENERGY CONSUMPTION: ****%	TOTAL ANNUAL, MILLS/KWH(YEAR)	.1(1978)	2.4(1981)	******(0)
KANSAS POWER & LIGHT	CAPACITY FACTOR, %	55	65	65
JEFFREY 2	DIRECT CAPITAL, $	**********	**********	**********
NEW 700MW (GROSS)	INDIRECT CAPITAL, $	**********	**********	**********
STARTUP 1/80 490MW (ESC)	OTHER CAPITAL, $	**********	**********	**********
COAL	TOTAL CAPITAL, $/KW(YEAR)	37.8(1980)	41.2(1981)	******(0)
.30 %S	DIRECT ANNUAL, $	**********	1083000.	**********
LIMESTONE	OVERHEAD COST, $	**********	315400.	**********
COMBUSTION ENGINEERING	FIXED CHARGES, $	**********	4998000.	**********
ENERGY CONSUMPTION: ****%	TOTAL ANNUAL, MILLS/KWH(YEAR)	.3(1980)	1.6(1981)	******(0)
KENTUCKY UTILITIES	CAPACITY FACTOR, %	13	65	65
GREEN RIVER 1-3	DIRECT CAPITAL, $	**********	**********	**********
RETROFIT 64MW (GROSS)	INDIRECT CAPITAL, $	**********	**********	**********
STARTUP 9/75 64MW (ESC)	OTHER CAPITAL, $	**********	**********	**********
COAL	TOTAL CAPITAL, $/KW(YEAR)	62.0(1975)	117.8(1981)	******(0)
4.00 %S BITUMINOUS	DIRECT ANNUAL, $	364005.	2012200.	**********
LIME	OVERHEAD COST, $	**********	430500.	**********
AMERICAN AIR FILTER	FIXED CHARGES, $	**********	1312100.	**********
ENERGY CONSUMPTION: 3.1%	TOTAL ANNUAL, MILLS/KWH(YEAR)	5.2(1978)	11.0(1981)	******(0)

****** INDICATES COST FIGURES NOT YET AVAILABLE

SECTION A-1
COSTS FOR OPERATIONAL FGD SYSTEMS

UNIT DESCRIPTION	COST DESCRIPTION	COST REPORTED	COST ADJUSTED	COST STANDARDIZED ADJUSTED
LOUISVILLE GAS & ELECTRIC	CAPACITY FACTOR, %	47	65	65
CANE RUN 4	DIRECT CAPITAL, $	10847000.	**********	**********
RETROFIT 188MW (GROSS)	INDIRECT CAPITAL, $	1800000.	**********	**********
STARTUP 8/76 188MW (ESC)	OTHER CAPITAL, $	**********	**********	**********
COAL	TOTAL CAPITAL, $/KW(YEAR)	66.6(1975)	115.2(1981)	******(0)
3.75 %S BITUMINOUS	DIRECT ANNUAL, $	960301.	2858600.	**********
LIME	OVERHEAD COST, $	**********	373300.	**********
AMERICAN AIR FILTER	FIXED CHARGES, $	**********	3190500.	**********
ENERGY CONSUMPTION: 1.6%	TOTAL ANNUAL, MILLS/KWH(YEAR)	1.3(1978)	6.2(1981)	******(0)
LOUISVILLE GAS & ELECTRIC	CAPACITY FACTOR, %	50	65	65
CANE RUN 5	DIRECT CAPITAL, $	**********	**********	**********
RETROFIT 200MW (GROSS)	INDIRECT CAPITAL, $	**********	**********	**********
STARTUP 12/77 200MW (ESC)	OTHER CAPITAL, $	**********	**********	**********
COAL	TOTAL CAPITAL, $/KW(YEAR)	68.8(1977)	102.4(1981)	******(0)
3.75 %S BITUMINOUS	DIRECT ANNUAL, $	763443.	2050900.	**********
LIME	OVERHEAD COST, $	**********	283100.	**********
COMBUSTION ENGINEERING	FIXED CHARGES, $	**********	3450300.	**********
ENERGY CONSUMPTION: 1.5%	TOTAL ANNUAL, MILLS/KWH(YEAR)	.9(1978)	5.3(1981)	******(0)
LOUISVILLE GAS & ELECTRIC	CAPACITY FACTOR, %	***	65	65
CANE RUN 6	DIRECT CAPITAL, $	**********	**********	**********
RETROFIT 299MW (GROSS)	INDIRECT CAPITAL, $	**********	**********	**********
STARTUP 4/79 299MW (ESC)	OTHER CAPITAL, $	**********	**********	**********
COAL	TOTAL CAPITAL, $/KW(YEAR)	71.5(1978)	87.8(1981)	******(0)
4.80 %S BITUMINOUS	DIRECT ANNUAL, $	**********	5465000.	**********
DUAL ALKALI	OVERHEAD COST, $	**********	891300.	**********
THYSSEN/CEA	FIXED CHARGES, $	**********	4716700.	**********
ENERGY CONSUMPTION: 1.0%	TOTAL ANNUAL, MILLS/KWH(YEAR)	******(1978)	7.2(1981)	******(0)
LOUISVILLE GAS & ELECTRIC	CAPACITY FACTOR, %	***	65	65
MILL CREEK 1	DIRECT CAPITAL, $	17661500.	**********	**********
RETROFIT 358MW (GROSS)	INDIRECT CAPITAL, $	**********	**********	**********
STARTUP 12/80 358MW (ESC)	OTHER CAPITAL, $	**********	**********	**********
COAL	TOTAL CAPITAL, $/KW(YEAR)	55.0(1980)	60.4(1981)	******(0)
3.75 %S BITUMINOUS	DIRECT ANNUAL, $	**********	3925700.	**********
LIME	OVERHEAD COST, $	**********	433300.	**********
COMBUSTION ENGINEERING	FIXED CHARGES, $	**********	3748100.	**********
ENERGY CONSUMPTION: 1.4%	TOTAL ANNUAL, MILLS/KWH(YEAR)	******(0)	4.3(1981)	******(0)
LOUISVILLE GAS & ELECTRIC	CAPACITY FACTOR, %	70	65	65
MILL CREEK 3	DIRECT CAPITAL, $	**********	**********	**********
NEW 427MW (GROSS)	INDIRECT CAPITAL, $	**********	**********	**********
STARTUP 8/78 427MW (ESC)	OTHER CAPITAL, $	**********	**********	**********
COAL	TOTAL CAPITAL, $/KW(YEAR)	42.6(1977)	66.0(1981)	******(0)
3.75 %S BITUMINOUS	DIRECT ANNUAL, $	321463.	4335300.	**********
LIME	OVERHEAD COST, $	**********	247000.	**********
AMERICAN AIR FILTER	FIXED CHARGES, $	**********	5053900.	**********
ENERGY CONSUMPTION: ****%	TOTAL ANNUAL, MILLS/KWH(YEAR)	1.3(1978)	4.0(1981)	******(0)
LOUISVILLE GAS & ELECTRIC	CAPACITY FACTOR, %	***	65	65
PADDY'S RUN 6	DIRECT CAPITAL, $	**********	**********	**********
RETROFIT 72MW (GROSS)	INDIRECT CAPITAL, $	**********	**********	**********
STARTUP 4/73 72MW (ESC)	OTHER CAPITAL, $	**********	**********	**********
COAL	TOTAL CAPITAL, $/KW(YEAR)	61.7(1973)	133.0(1981)	******(0)
2.50 %S BITUMINOUS	DIRECT ANNUAL, $	**********	2201900.	**********
LIME	OVERHEAD COST, $	**********	562400.	**********
COMBUSTION ENGINEERING	FIXED CHARGES, $	**********	1666000.	**********
ENERGY CONSUMPTION: 2.8%	TOTAL ANNUAL, MILLS/KWH(YEAR)	******(1978)	12.2(1981)	******(0)

****** INDICATES COST FIGURES NOT YET AVAILABLE

SECTION A-1
COSTS FOR OPERATIONAL FGD SYSTEMS

UNIT DESCRIPTION	COST DESCRIPTION	COST REPORTED	COST ADJUSTED	COST STANDARDIZED ADJUSTED
MINNESOTA POWER & LIGHT	CAPACITY FACTOR, %	80	65	65
CLAY BOSWELL 4	DIRECT CAPITAL, $	26900000.	26580300.	**********
NEW 554MW (GROSS)	INDIRECT CAPITAL, $	**********	15584500.	**********
STARTUP 4/80 475MW (ESC)	OTHER CAPITAL, $	**********	**********	**********
COAL	TOTAL CAPITAL, $/KW(YEAR)	173.8(1979)	184.4(1981)	******(0)
.94 %S SUBBITUMINOUS	DIRECT ANNUAL, $	**********	15544100.	**********
LIME/ALKALINE FLYASH	OVERHEAD COST, $	**********	7189000.	**********
PEABODY PROCESS SYSTEMS	FIXED CHARGES, $	**********	17705200.	**********
ENERGY CONSUMPTION: 1.3%	TOTAL ANNUAL, MILLS/KWH(YEAR)	5.4(1980)	14.1(1981)	******(0)
MINNKOTA POWER	CAPACITY FACTOR, %	40	65	65
MILTON R. YOUNG 2	DIRECT CAPITAL, $	30066200.	**********	**********
NEW 440MW (GROSS)	INDIRECT CAPITAL, $	14052400.	**********	**********
STARTUP 9/77 185MW (ESC)	OTHER CAPITAL, $	**********	**********	**********
COAL	TOTAL CAPITAL, $/KW(YEAR)	100.3(1976)	155.7(1981)	******(0)
.70 %S LIGNITE	DIRECT ANNUAL, $	754445.	2481000.	**********
LIME/ALKALINE FLYASH	OVERHEAD COST, $	**********	616100.	**********
THYSSEN/CEA	FIXED CHARGES, $	**********	11868900.	**********
ENERGY CONSUMPTION: 1.6%	TOTAL ANNUAL, MILLS/KWH(YEAR)	.5(1978)	6.4(1981)	******(0)
MONONGAHELA POWER	CAPACITY FACTOR, %	70	65	65
PLEASANTS 1	DIRECT CAPITAL, $	**********	**********	**********
NEW 668MW (GROSS)	INDIRECT CAPITAL, $	**********	**********	**********
STARTUP 3/79 668MW (ESC)	OTHER CAPITAL, $	**********	**********	**********
COAL	TOTAL CAPITAL, $/KW(YEAR)	119.1(1978)	152.9(1981)	******(0)
3.00 %S BITUMINOUS	DIRECT ANNUAL, $	5532800.	8857900.	**********
LIME	OVERHEAD COST, $	**********	972800.	**********
BABCOCK & WILCOX	FIXED CHARGES, $	**********	18120600.	**********
ENERGY CONSUMPTION: ****%	TOTAL ANNUAL, MILLS/KWH(YEAR)	1.5(1980)	7.9(1981)	******(0)
MONONGAHELA POWER	CAPACITY FACTOR, %	70	65	65
PLEASANTS 2	DIRECT CAPITAL, $	**********	**********	**********
NEW 668MW (GROSS)	INDIRECT CAPITAL, $	**********	**********	**********
STARTUP 10/80 668MW (ESC)	OTHER CAPITAL, $	**********	**********	**********
COAL	TOTAL CAPITAL, $/KW(YEAR)	119.1(1978)	152.9(1981)	******(0)
3.00 %S BITUMINOUS	DIRECT ANNUAL, $	5532800.	8857900.	**********
LIME	OVERHEAD COST, $	**********	972800.	**********
BABCOCK & WILCOX	FIXED CHARGES, $	**********	18120600.	**********
ENERGY CONSUMPTION: ****%	TOTAL ANNUAL, MILLS/KWH(YEAR)	1.5(1980)	7.9(1981)	******(0)
MONTANA POWER	CAPACITY FACTOR, %	71	65	65
COLSTRIP 1	DIRECT CAPITAL, $	**********	**********	**********
NEW 360MW (GROSS)	INDIRECT CAPITAL, $	**********	**********	**********
STARTUP 9/75 360MW (ESC)	OTHER CAPITAL, $	**********	**********	**********
COAL	TOTAL CAPITAL, $/KW(YEAR)	101.4(1975)	145.9(1981)	******(0)
.77 %S SUBBITUMINOUS	DIRECT ANNUAL, $	**********	5275300.	**********
LIME/ALKALINE FLYASH	OVERHEAD COST, $	**********	1265050.	**********
THYSSEN/CEA	FIXED CHARGES, $	**********	9101700.	**********
ENERGY CONSUMPTION: 3.3%	TOTAL ANNUAL, MILLS/KWH(YEAR)	3.0(1979)	8.3(1981)	******(0)
MONTANA POWER	CAPACITY FACTOR, %	71	65	65
COLSTRIP 2	DIRECT CAPITAL, $	**********	**********	**********
NEW 360MW (GROSS)	INDIRECT CAPITAL, $	**********	**********	**********
STARTUP 5/76 360MW (ESC)	OTHER CAPITAL, $	**********	**********	**********
COAL	TOTAL CAPITAL, $/KW(YEAR)	101.4(1975)	145.9(1981)	******(0)
.77 %S SUBBITUMINOUS	DIRECT ANNUAL, $	**********	5275300.	**********
LIME/ALKALINE FLYASH	OVERHEAD COST, $	**********	1265050.	**********
THYSSEN/CEA	FIXED CHARGES, $	**********	9101700.	**********
ENERGY CONSUMPTION: 3.3%	TOTAL ANNUAL, MILLS/KWH(YEAR)	3.0(1979)	8.3(1981)	******(0)

****** INDICATES COST FIGURES NOT YET AVAILABLE

SECTION A-1
COSTS FOR OPERATIONAL FGD SYSTEMS

UNIT DESCRIPTION	COST DESCRIPTION	COST REPORTED	COST ADJUSTED	COST STANDARDIZED ADJUSTED
NEVADA POWER	CAPACITY FACTOR, %	56	65	65
REID GARDNER 1	DIRECT CAPITAL, $	2681660.	**********	**********
RETROFIT 125MW (GROSS)	INDIRECT CAPITAL, $	2681715.	**********	**********
STARTUP 3/74 125MW (ESC)	OTHER CAPITAL, $	**********	**********	**********
COAL	TOTAL CAPITAL, $/KW(YEAR)	42.9(1973)	87.1(1981)	******(0)
.50 %S BITUMINOUS	DIRECT ANNUAL, $	251514.	1487650.	**********
SODIUM CARBONATE	OVERHEAD COST, $	**********	98550.	**********
THYSSEN/CEA	FIXED CHARGES, $	**********	2031250.	**********
ENERGY CONSUMPTION: ****%	TOTAL ANNUAL, MILLS/KWH(YEAR)	.5(1978)	5.8(1981)	******(0)
NEVADA POWER	CAPACITY FACTOR, %	56	65	65
REID GARDNER 2	DIRECT CAPITAL, $	2681660.	**********	**********
RETROFIT 125MW (GROSS)	INDIRECT CAPITAL, $	2681715.	**********	**********
STARTUP 4/74 125MW (ESC)	OTHER CAPITAL, $	**********	**********	**********
COAL	TOTAL CAPITAL, $/KW(YEAR)	42.9(1973)	87.1(1981)	******(0)
.50 %S BITUMINOUS	DIRECT ANNUAL, $	251514.	1487650.	**********
SODIUM CARBONATE	OVERHEAD COST, $	**********	98550.	**********
THYSSEN/CEA	FIXED CHARGES, $	**********	2031250.	**********
ENERGY CONSUMPTION: ****%	TOTAL ANNUAL, MILLS/KWH(YEAR)	.5(1978)	5.8(1981)	******(0)
NEVADA POWER	CAPACITY FACTOR, %	59	65	65
REID GARDNER 3	DIRECT CAPITAL, $	**********	**********	**********
NEW 125MW (GROSS)	INDIRECT CAPITAL, $	**********	**********	**********
STARTUP 6/76 125MW (ESC)	OTHER CAPITAL, $	**********	**********	**********
COAL	TOTAL CAPITAL, $/KW(YEAR)	100.8(1975)	150.9(1981)	******(0)
.50 %S BITUMINOUS	DIRECT ANNUAL, $	131824.	1317125.	**********
SODIUM CARBONATE	OVERHEAD COST, $	**********	50530.	**********
THYSSEN/CEA	FIXED CHARGES, $	**********	3269508.	**********
ENERGY CONSUMPTION: ****%	TOTAL ANNUAL, MILLS/KWH(YEAR)	.2(1978)	7.4(1981)	******(0)
NORTHERN INDIANA PUB SERVICE	CAPACITY FACTOR, %	23	65	65
DEAN H. MITCHELL 11	DIRECT CAPITAL, $	11951830.	**********	**********
RETROFIT 116MW (GROSS)	INDIRECT CAPITAL, $	6240210.	**********	**********
STARTUP 7/76 115MW (ESC)	OTHER CAPITAL, $	**********	**********	**********
COAL	TOTAL CAPITAL, $/KW(YEAR)	157.4(1976)	254.6(1981)	******(0)
3.50 %S	DIRECT ANNUAL, $	665890.	1793207.	**********
WELLMAN LORD	OVERHEAD COST, $	**********	697816.	**********
DAVY MCKEE	FIXED CHARGES, $	**********	8638236.	**********
ENERGY CONSUMPTION: 12.1%	TOTAL ANNUAL, MILLS/KWH(YEAR)	13.0(1978)	20.8(1981)	******(0)
NORTHERN STATES POWER	CAPACITY FACTOR, %	61	65	65
SHERBURNE 1	DIRECT CAPITAL, $	34982020.	72507042.	**********
NEW 740MW (GROSS)	INDIRECT CAPITAL, $	**********	22207992.	**********
STARTUP 3/76 740MW (ESC)	OTHER CAPITAL, $	**********	**********	**********
COAL	TOTAL CAPITAL, $/KW(YEAR)	49.3(1972)	102.6(1981)	******(0)
.80 %S SUBBITUMINOUS	DIRECT ANNUAL, $	2716759.	8219212.	**********
LIMESTONE/ALKALINE FLYASH	OVERHEAD COST, $	**********	**********	**********
COMBUSTION ENGINEERING	FIXED CHARGES, $	**********	12798982.	**********
ENERGY CONSUMPTION: 2.7%	TOTAL ANNUAL, MILLS/KWH(YEAR)	.8(1978)	5.4(1981)	******(0)
NORTHERN STATES POWER	CAPACITY FACTOR, %	61	65	65
SHERBURNE 2	DIRECT CAPITAL, $	34982020.	72507042.	**********
NEW 740MW (GROSS)	INDIRECT CAPITAL, $	**********	22207992.	**********
STARTUP 3/77 740MW (ESC)	OTHER CAPITAL, $	**********	**********	**********
COAL	TOTAL CAPITAL, $/KW(YEAR)	49.3(1972)	102.6(1981)	******(0)
.80 %S SUBBITUMINOUS	DIRECT ANNUAL, $	2716759.	8219212.	**********
LIMESTONE/ALKALINE FLYASH	OVERHEAD COST, $	**********	**********	**********
COMBUSTION ENGINEERING	FIXED CHARGES, $	**********	12798982.	**********
ENERGY CONSUMPTION: 2.7%	TOTAL ANNUAL, MILLS/KWH(YEAR)	.8(1978)	5.4(1981)	******(0)

****** INDICATES COST FIGURES NOT YET AVAILABLE

SECTION A-1
COSTS FOR OPERATIONAL FGD SYSTEMS

UNIT DESCRIPTION	COST DESCRIPTION	COST REPORTED	COST ADJUSTED	COST STANDARDIZED ADJUSTED
PACIFIC POWER & LIGHT	CAPACITY FACTOR, %	***	65	65
JIM BRIDGER 4	DIRECT CAPITAL, $	**********	**********	**********
NEW 550MW (GROSS)	INDIRECT CAPITAL, $	**********	**********	**********
STARTUP 9/79 550MW (ESC)	OTHER CAPITAL, $	**********	**********	**********
COAL	TOTAL CAPITAL, $/KW(YEAR)	90.3(1974)	118.4(1981)	******(0)
.56 %S SUBBITUMINOUS	DIRECT ANNUAL, $	**********	6589756.	**********
SODIUM CARBONATE	OVERHEAD COST, $	**********	1807194.	**********
AIR CORRECTION DIVISION, UOP	FIXED CHARGES, $	**********	11234210.	**********
ENERGY CONSUMPTION: .2%	TOTAL ANNUAL, MILLS/KWH(YEAR)	******(1978)	6.8(1981)	******(0)
PENNSYLVANIA POWER	CAPACITY FACTOR, %	42	65	65
BRUCE MANSFIELD 1	DIRECT CAPITAL, $	**********	**********	**********
NEW 917MW (GROSS)	INDIRECT CAPITAL, $	**********	**********	**********
STARTUP 12/75 917MW (ESC)	OTHER CAPITAL, $	**********	**********	**********
COAL	TOTAL CAPITAL, $/KW(YEAR)	120.7(1975)	144.2(1981)	******(0)
3.00 %S BITUMINOUS	DIRECT ANNUAL, $	9979900.	26727486.	**********
LIME	OVERHEAD COST, $	**********	3254475.	**********
GE ENVIRONMENTAL SERVICES	FIXED CHARGES, $	**********	23140957.	**********
ENERGY CONSUMPTION: 6.0%	TOTAL ANNUAL, MILLS/KWH(YEAR)	3.3(1978)	11.3(1981)	******(0)
PENNSYLVANIA POWER	CAPACITY FACTOR, %	42	65	65
BRUCE MANSFIELD 2	DIRECT CAPITAL, $	**********	**********	**********
NEW 917MW (GROSS)	INDIRECT CAPITAL, $	**********	**********	**********
STARTUP 7/77 917MW (ESC)	OTHER CAPITAL, $	**********	**********	**********
COAL	TOTAL CAPITAL, $/KW(YEAR)	120.6(1975)	144.2(1981)	******(0)
3.00 %S BITUMINOUS	DIRECT ANNUAL, $	9979900.	26727486.	**********
LIME	OVERHEAD COST, $	**********	3254475.	**********
GE ENVIRONMENTAL SERVICES	FIXED CHARGES, $	**********	23140957.	**********
ENERGY CONSUMPTION: 6.0%	TOTAL ANNUAL, MILLS/KWH(YEAR)	3.3(1978)	11.3(1981)	******(0)
PENNSYLVANIA POWER	CAPACITY FACTOR, %	53	65	65
BRUCE MANSFIELD 3	DIRECT CAPITAL, $	**********	**********	**********
NEW 917MW (GROSS)	INDIRECT CAPITAL, $	**********	**********	**********
STARTUP 6/80 917MW (ESC)	OTHER CAPITAL, $	**********	**********	**********
COAL	TOTAL CAPITAL, $/KW(YEAR)	213.6(1980)	181.1(1981)	******(0)
3.00 %S	DIRECT ANNUAL, $	**********	17885000.	**********
LIME	OVERHEAD COST, $	**********	1594900.	**********
M.W. KELLOGG	FIXED CHARGES, $	**********	28775300.	**********
ENERGY CONSUMPTION: ****%	TOTAL ANNUAL, MILLS/KWH(YEAR)	3.1(1980)	10.3(1981)	******(0)
PUBLIC SERVICE OF NEW MEXICO	CAPACITY FACTOR, %	***	65	65
SAN JUAN 1	DIRECT CAPITAL, $	**********	70163268.	**********
RETROFIT 361MW (GROSS)	INDIRECT CAPITAL, $	**********	30170205.	**********
STARTUP 4/78 361MW (ESC)	OTHER CAPITAL, $	**********	**********	**********
COAL	TOTAL CAPITAL, $/KW(YEAR)	132.8(1977)	277.9(1981)	******(0)
.80 %S SUBBITUMINOUS	DIRECT ANNUAL, $	**********	8507351.	**********
WELLMAN LORD	OVERHEAD COST, $	**********	2617248.	**********
DAVY MCKEE	FIXED CHARGES, $	**********	18712193.	**********
ENERGY CONSUMPTION: 4.4%	TOTAL ANNUAL, MILLS/KWH(YEAR)	******(1978)	16.7(1981)	******(0)
PUBLIC SERVICE OF NEW MEXICO	CAPACITY FACTOR, %	***	65	65
SAN JUAN 2	DIRECT CAPITAL, $	**********	69075223.	**********
RETROFIT 350MW (GROSS)	INDIRECT CAPITAL, $	**********	29702346.	**********
STARTUP 8/78 350MW (ESC)	OTHER CAPITAL, $	**********	**********	**********
COAL	TOTAL CAPITAL, $/KW(YEAR)	137.1(1977)	282.2(1981)	******(0)
.80 %S SUBBITUMINOUS	DIRECT ANNUAL, $	**********	8420285.	**********
WELLMAN LORD	OVERHEAD COST, $	**********	2581462.	**********
DAVY MCKEE	FIXED CHARGES, $	**********	18422017.	**********
ENERGY CONSUMPTION: 4.6%	TOTAL ANNUAL, MILLS/KWH(YEAR)	******(1978)	16.9(1981)	******(0)

****** INDICATES COST FIGURES NOT YET AVAILABLE

SECTION A-1
COSTS FOR OPERATIONAL FGD SYSTEMS

UNIT DESCRIPTION	COST DESCRIPTION	COST REPORTED	COST ADJUSTED	COST STANDARDIZED ADJUSTED
PUBLIC SERVICE OF NEW MEXICO	CAPACITY FACTOR, %	***	65	65
SAN JUAN 3	DIRECT CAPITAL, $	98790000.	**********	**********
NEW 534MW (GROSS)	INDIRECT CAPITAL, $	**********	**********	**********
STARTUP 12/79 534MW (ESC)	OTHER CAPITAL, $	**********	**********	**********
COAL	TOTAL CAPITAL, $/KW(YEAR)	185.0(1978)	******(0)	******(0)
.80 %S SUBBITUMINOUS	DIRECT ANNUAL, $	**********	**********	**********
WELLMAN LORD	OVERHEAD COST, $	**********	**********	**********
DAVY MCKEE	FIXED CHARGES, $	**********	**********	**********
ENERGY CONSUMPTION: 3.6%	TOTAL ANNUAL, MILLS/KWH(YEAR)	******(0)	******(0)	******(0)
SALT RIVER PROJECT	CAPACITY FACTOR, %	50	65	65
CORONADO 1	DIRECT CAPITAL, $	18899000.	**********	**********
NEW 350MW (GROSS)	INDIRECT CAPITAL, $	13725500.	**********	**********
STARTUP 11/79 280MW (ESC)	OTHER CAPITAL, $	**********	**********	**********
COAL	TOTAL CAPITAL, $/KW(YEAR)	79.4(1979)	86.5(1981)	******(0)
.50 %S SUBBITUMINOUS	DIRECT ANNUAL, $	1738000.	2238800.	**********
LIMESTONE	OVERHEAD COST, $	**********	775000.	**********
M.W. KELLOGG	FIXED CHARGES, $	**********	12325300.	**********
ENERGY CONSUMPTION: 4.3%	TOTAL ANNUAL, MILLS/KWH(YEAR)	.8(1980)	7.7(1981)	******(0)
SALT RIVER PROJECT	CAPACITY FACTOR, %	50	65	65
CORONADO 2	DIRECT CAPITAL, $	18899000.	**********	**********
NEW 350MW (GROSS)	INDIRECT CAPITAL, $	13725500.	**********	**********
STARTUP 7/80 280MW (ESC)	OTHER CAPITAL, $	**********	**********	**********
COAL	TOTAL CAPITAL, $/KW(YEAR)	79.4(1979)	86.5(1981)	******(0)
.50 %S SUBBITUMINOUS	DIRECT ANNUAL, $	1738000.	2238800.	**********
LIMESTONE	OVERHEAD COST, $	**********	775000.	**********
M.W. KELLOGG	FIXED CHARGES, $	**********	12325300.	**********
ENERGY CONSUMPTION: 4.3%	TOTAL ANNUAL, MILLS/KWH(YEAR)	.8(1980)	7.7(1981)	******(0)
SOUTH CAROLINA PUBLIC SERVICE	CAPACITY FACTOR, %	80	65	65
WINYAH 2	DIRECT CAPITAL, $	6026098.	10319197.	**********
NEW 280MW (GROSS)	INDIRECT CAPITAL, $	520000.	2673675.	**********
STARTUP 7/77 140MW (ESC)	OTHER CAPITAL, $	100000.	157000.	**********
COAL	TOTAL CAPITAL, $/KW(YEAR)	23.7(1976)	47.0(1981)	******(0)
1.10 %S BITUMINOUS	DIRECT ANNUAL, $	527000.	603516.	**********
LIMESTONE	OVERHEAD COST, $	**********	144402.	**********
BABCOCK & WILCOX	FIXED CHARGES, $	**********	1949978.	**********
ENERGY CONSUMPTION: 1.1%	TOTAL ANNUAL, MILLS/KWH(YEAR)	.3(1978)	1.8(1981)	******(0)
SOUTH CAROLINA PUBLIC SERVICE	CAPACITY FACTOR, %	***	65	65
WINYAH 3	DIRECT CAPITAL, $	10742500.	**********	**********
NEW 280MW (GROSS)	INDIRECT CAPITAL, $	**********	**********	**********
STARTUP 5/80 280MW (ESC)	OTHER CAPITAL, $	**********	**********	**********
COAL	TOTAL CAPITAL, $/KW(YEAR)	38.4(1979)	66.6(1981)	******(0)
1.10 %S	DIRECT ANNUAL, $	**********	2956700.	**********
LIMESTONE	OVERHEAD COST, $	**********	738500.	**********
BABCOCK & WILCOX	FIXED CHARGES, $	**********	3231500.	**********
ENERGY CONSUMPTION: 2.1%	TOTAL ANNUAL, MILLS/KWH(YEAR)	******(0)	4.8(1981)	******(0)
SOUTH MISSISSIPPI ELEC PWR	CAPACITY FACTOR, %	***	65	65
R.D. MORROW, SR. 1	DIRECT CAPITAL, $	10250000.	18726000.	**********
NEW 200MW (GROSS)	INDIRECT CAPITAL, $	646000.	5321200.	**********
STARTUP 8/78 124MW (ESC)	OTHER CAPITAL, $	**********	**********	**********
COAL	TOTAL CAPITAL, $/KW(YEAR)	53.7(1975)	118.5(1981)	******(0)
1.30 %S BITUMINOUS	DIRECT ANNUAL, $	**********	3499404.	**********
LIMESTONE	OVERHEAD COST, $	**********	707874.	**********
ENVIRONEERING, RILEY STOKER	FIXED CHARGES, $	**********	2909711.	**********
ENERGY CONSUMPTION: 5.5%	TOTAL ANNUAL, MILLS/KWH(YEAR)	******(1978)	6.9(1981)	******(0)

****** INDICATES COST FIGURES NOT YET AVAILABLE

SECTION A-1
COSTS FOR OPERATIONAL FGD SYSTEMS

UNIT DESCRIPTION	COST DESCRIPTION	COST REPORTED	COST ADJUSTED	COST STANDARDIZED ADJUSTED
SOUTH MISSISSIPPI ELEC PWR	CAPACITY FACTOR, %	***	65	65
R.D. MORROW, SR. 2	DIRECT CAPITAL, $	10250000.	18726000.	**********
NEW 200MW (GROSS)	INDIRECT CAPITAL, $	646000.	5321200.	**********
STARTUP 6/79 124MW (ESC)	OTHER CAPITAL, $	**********	**********	**********
COAL	TOTAL CAPITAL, $/KW(YEAR)	53.7(1975)	118.5(1981)	******(0)
1.30 %S BITUMINOUS	DIRECT ANNUAL, $	**********	3498404.	**********
LIMESTONE	OVERHEAD COST, $	**********	707974.	**********
ENVIRONEERING, RILEY STOKER	FIXED CHARGES, $	**********	2909711.	**********
ENERGY CONSUMPTION: 5.5%	TOTAL ANNUAL, MILLS/KWH(YEAR)	******(1978)	6.9(1981)	******(0)
SOUTHERN ILLINOIS POWER	CAPACITY FACTOR, %	63	65	65
MARION 4	DIRECT CAPITAL, $	**********	**********	**********
NEW 173MW (GROSS)	INDIRECT CAPITAL, $	**********	**********	**********
STARTUP 5/79 173MW (ESC)	OTHER CAPITAL, $	**********	**********	**********
COAL/REFUS	TOTAL CAPITAL, $/KW(YEAR)	87.9(1977)	120.8(1981)	******(0)
3.75 %S BITUMINOUS	DIRECT ANNUAL, $	859453.	2594309.	**********
LIMESTONE	OVERHEAD COST, $	**********	790427.	**********
BABCOCK & WILCOX	FIXED CHARGES, $	**********	3623087.	**********
ENERGY CONSUMPTION: 2.3%	TOTAL ANNUAL, MILLS/KWH(YEAR)	1.0(1978)	7.7(1981)	******(0)
SOUTHERN INDIANA GAS & ELEC	CAPACITY FACTOR, %	65	65	65
A.B. BROWN 1	DIRECT CAPITAL, $	12495000.	16373698.	**********
NEW 265MW (GROSS)	INDIRECT CAPITAL, $	**********	7040690.	**********
STARTUP 3/79 265MW (ESC)	OTHER CAPITAL, $	**********	**********	**********
COAL	TOTAL CAPITAL, $/KW(YEAR)	47.2(1978)	88.4(1981)	******(0)
3.35 %S BITUMINOUS	DIRECT ANNUAL, $	1850565.	2731502.	**********
DUAL ALKALI	OVERHEAD COST, $	**********	304915.	**********
FMC	FIXED CHARGES, $	**********	4057713.	**********
ENERGY CONSUMPTION: .8%	TOTAL ANNUAL, MILLS/KWH(YEAR)	1.3(1978)	5.0(1981)	******(0)
SPRINGFIELD CITY UTILITIES	CAPACITY FACTOR, %	43	65	65
SOUTHWEST 1	DIRECT CAPITAL, $	**********	**********	**********
NEW 194MW (GROSS)	INDIRECT CAPITAL, $	**********	**********	**********
STARTUP 4/77 194MW (ESC)	OTHER CAPITAL, $	**********	**********	**********
COAL	TOTAL CAPITAL, $/KW(YEAR)	86.3(1974)	143.4(1981)	******(0)
3.50 %S BITUMINOUS	DIRECT ANNUAL, $	778749.	2768287.	**********
LIMESTONE	OVERHEAD COST, $	**********	502293.	**********
AIR CORRECTION DIVISION, UOP	FIXED CHARGES, $	**********	4821658.	**********
ENERGY CONSUMPTION: 4.6%	TOTAL ANNUAL, MILLS/KWH(YEAR)	1.2(1979)	8.2(1981)	******(0)
SPRINGFIELD WATER, LIGHT & PWR	CAPACITY FACTOR, %	52	65	65
DALLMAN 3	DIRECT CAPITAL, $	**********	**********	**********
NEW 205MW (GROSS)	INDIRECT CAPITAL, $	**********	**********	**********
STARTUP 12/80 185MW (ESC)	OTHER CAPITAL, $	**********	**********	**********
COAL	TOTAL CAPITAL, $/KW(YEAR)	170.4(1980)	194.3(1981)	******(0)
3.30 %S BITUMINOUS	DIRECT ANNUAL, $	4381500.	6991900.	**********
LIMESTONE	OVERHEAD COST, $	**********	2019400.	**********
RESEARCH-COTTRELL	FIXED CHARGES, $	**********	6902400.	**********
ENERGY CONSUMPTION: 4.9%	TOTAL ANNUAL, MILLS/KWH(YEAR)	4.7(1980)	14.6(1981)	******(0)
TENNESSEE VALLEY AUTHORITY	CAPACITY FACTOR, %	***	65	65
WIDOWS CREEK 7	DIRECT CAPITAL, $	25875000.	**********	**********
RETROFIT 575MW (GROSS)	INDIRECT CAPITAL, $	**********	**********	**********
STARTUP 3/81 575MW (ESC)	OTHER CAPITAL, $	**********	**********	**********
COAL	TOTAL CAPITAL, $/KW(YEAR)	45.0(0)	******(0)	******(0)
3.70 %S BITUMINOUS	DIRECT ANNUAL, $	**********	**********	**********
LIMESTONE	OVERHEAD COST, $	**********	**********	**********
COMBUSTION ENGINEERING	FIXED CHARGES, $	**********	**********	**********
ENERGY CONSUMPTION: ****%	TOTAL ANNUAL, MILLS/KWH(YEAR)	******(0)	******(0)	******(0)

****** INDICATES COST FIGURES NOT YET AVAILABLE

SECTION A-1
COSTS FOR OPERATIONAL FGD SYSTEMS

UNIT DESCRIPTION	COST DESCRIPTION	COST REPORTED	COST ADJUSTED	COST STANDARDIZED ADJUSTED
TENNESSEE VALLEY AUTHORITY	CAPACITY FACTOR, %	41	65	65
WIDOWS CREEK 8	DIRECT CAPITAL, $	**********	**********	**********
RETROFIT 550MW (GROSS)	INDIRECT CAPITAL, $	**********	**********	**********
STARTUP 5/77 550MW (ESC)	OTHER CAPITAL, $	**********	**********	**********
COAL	TOTAL CAPITAL, $/KW(YEAR)	87.1(1976)	158.1(1981)	******(0)
3.70 %S BITUMINOUS	DIRECT ANNUAL, $	**********	5159337.	**********
LIMESTONE	OVERHEAD COST, $	**********	**********	**********
TENNESSEE VALLEY AUTHORITY	FIXED CHARGES, $	**********	16219686.	**********
ENERGY CONSUMPTION: 4.7%	TOTAL ANNUAL, MILLS/KWH(YEAR)	7.8(1978)	7.3(1981)	******(0)
TEXAS UTILITIES	CAPACITY FACTOR, %	***	65	65
MONTICELLO 3	DIRECT CAPITAL, $	**********	**********	**********
NEW 800MW (GROSS)	INDIRECT CAPITAL, $	**********	**********	**********
STARTUP 5/78 800MW (ESC)	OTHER CAPITAL, $	**********	**********	**********
COAL	TOTAL CAPITAL, $/KW(YEAR)	25.0(1978)	******(0)	******(0)
1.50 %S LIGNITE	DIRECT ANNUAL, $	**********	**********	**********
LIMESTONE	OVERHEAD COST, $	**********	**********	**********
GE ENVIRONMENTAL SERVICES	FIXED CHARGES, $	**********	**********	**********
ENERGY CONSUMPTION: ****%	TOTAL ANNUAL, MILLS/KWH(YEAR)	******(0)	******(0)	******(0)
UTAH POWER & LIGHT	CAPACITY FACTOR, %	***	65	65
HUNTER 1	DIRECT CAPITAL, $	**********	**********	**********
NEW 400MW (GROSS)	INDIRECT CAPITAL, $	**********	**********	**********
STARTUP 5/79 360MW (ESC)	OTHER CAPITAL, $	**********	**********	**********
COAL	TOTAL CAPITAL, $/KW(YEAR)	56.7(1978)	75.1(1981)	******(0)
.55 %S BITUMINOUS	DIRECT ANNUAL, $	**********	3965828.	**********
LIME	OVERHEAD COST, $	**********	1052046.	**********
GE ENVIRONMENTAL SERVICES	FIXED CHARGES, $	**********	5596658.	**********
ENERGY CONSUMPTION: ****%	TOTAL ANNUAL, MILLS/KWH(YEAR)	******(1978)	4.7(1981)	******(0)
UTAH POWER & LIGHT	CAPACITY FACTOR, %	96	65	65
HUNTER 2	DIRECT CAPITAL, $	**********	**********	**********
NEW 400MW (GROSS)	INDIRECT CAPITAL, $	**********	**********	**********
STARTUP 6/80 360MW (ESC)	OTHER CAPITAL, $	**********	**********	**********
COAL	TOTAL CAPITAL, $/KW(YEAR)	60.2(1979)	72.6(1981)	******(0)
.55 %S	DIRECT ANNUAL, $	**********	3916600.	**********
LIME	OVERHEAD COST, $	**********	1027800.	**********
GE ENVIRONMENTAL SERVICES	FIXED CHARGES, $	**********	5411300.	**********
ENERGY CONSUMPTION: ****%	TOTAL ANNUAL, MILLS/KWH(YEAR)	.3(1980)	4.5(1981)	******(0)
UTAH POWER & LIGHT	CAPACITY FACTOR, %	80	65	65
HUNTINGTON 1	DIRECT CAPITAL, $	**********	**********	**********
NEW 430MW (GROSS)	INDIRECT CAPITAL, $	**********	**********	**********
STARTUP 5/78 366MW (ESC)	OTHER CAPITAL, $	**********	**********	**********
COAL	TOTAL CAPITAL, $/KW(YEAR)	63.0(1977)	90.0(1981)	******(0)
.55 %S BITUMINOUS	DIRECT ANNUAL, $	2946400.	5058009.	**********
LIME	OVERHEAD COST, $	**********	1647174.	**********
GE ENVIRONMENTAL SERVICES	FIXED CHARGES, $	**********	6706469.	**********
ENERGY CONSUMPTION: 1.6%	TOTAL ANNUAL, MILLS/KWH(YEAR)	1.3(1978)	5.9(1981)	******(0)

****** INDICATES COST FIGURES NOT YET AVAILABLE

SECTION A-2
COSTS FOR NON-OPERATIONAL FGD SYSTEMS

UNIT DESCRIPTION	COST DESCRIPTION	COST REPORTED	COST ADJUSTED	COST STANDARDIZED ADJUSTED
BASIN ELECTRIC POWER	CAPACITY FACTOR, %	75	65	65
ANTELOPE VALLEY 1	DIRECT CAPITAL, $	**********	**********	**********
NEW 440MW (GROSS)	INDIRECT CAPITAL, $	**********	**********	**********
STARTUP 10/83 440MW (ESC)	OTHER CAPITAL, $	**********	**********	**********
COAL	TOTAL CAPITAL, $/KW(YEAR)	75.2(1981)	******(0)	******(0)
.68 %S LIGNITE	DIRECT ANNUAL, $	**********	**********	**********
LIME/SPRAY DRYING	OVERHEAD COST, $	**********	**********	**********
JOY MFG/NIRO ATOMIZER	FIXED CHARGES, $	**********	**********	**********
ENERGY CONSUMPTION: ****%	TOTAL ANNUAL, MILLS/KWH(YEAR)	.8(1981)	******(0)	******(0)
BASIN ELECTRIC POWER	CAPACITY FACTOR, %	***	65	65
ANTELOPE VALLEY 2	DIRECT CAPITAL, $	47960000.	**********	**********
NEW 440MW (GROSS)	INDIRECT CAPITAL, $	**********	**********	**********
STARTUP 10/85 440MW (ESC)	OTHER CAPITAL, $	**********	**********	**********
COAL	TOTAL CAPITAL, $/KW(YEAR)	109.0(0)	******(0)	******(0)
.68 %S LIGNITE	DIRECT ANNUAL, $	1797596.	**********	**********
LIME/SPRAY DRYING	OVERHEAD COST, $	**********	**********	**********
JOY MFG/NIRO ATOMIZER	FIXED CHARGES, $	**********	**********	**********
ENERGY CONSUMPTION: ****%	TOTAL ANNUAL, MILLS/KWH(YEAR)	.8(7800)	******(0)	******(0)
BASIN ELECTRIC POWER	CAPACITY FACTOR, %	75	65	65
LARAMIE RIVER 3	DIRECT CAPITAL, $	**********	**********	**********
NEW 570MW (GROSS)	INDIRECT CAPITAL, $	**********	**********	**********
STARTUP 11/82 570MW (ESC)	OTHER CAPITAL, $	**********	**********	**********
COAL	TOTAL CAPITAL, $/KW(YEAR)	83.0(1981)	******(0)	******(0)
.54 %S SUBBITUMINOUS	DIRECT ANNUAL, $	**********	**********	**********
LIME/SPRAY DRYING	OVERHEAD COST, $	**********	**********	**********
BABCOCK & WILCOX	FIXED CHARGES, $	**********	**********	**********
ENERGY CONSUMPTION: ****%	TOTAL ANNUAL, MILLS/KWH(YEAR)	.6(1981)	******(0)	******(0)
BOSTON EDISON	CAPACITY FACTOR, %	***	65	65
MYSTIC 6	DIRECT CAPITAL, $	**********	**********	**********
RETROFIT 150MW (GROSS)	INDIRECT CAPITAL, $	**********	**********	**********
STARTUP 4/72 150MW (ESC)	OTHER CAPITAL, $	**********	**********	**********
OIL	TOTAL CAPITAL, $/KW(YEAR)	63.4(1972)	******(0)	******(0)
2.00 %S NO. 6	DIRECT ANNUAL, $	**********	**********	**********
MAGNESIUM OXIDE	OVERHEAD COST, $	**********	**********	**********
GE ENVIRONMENTAL SERVICES	FIXED CHARGES, $	**********	**********	**********
ENERGY CONSUMPTION: ****%	TOTAL ANNUAL, MILLS/KWH(YEAR)	3.0(1974)	******(0)	******(0)
COMMONWEALTH EDISON	CAPACITY FACTOR, %	49	65	65
WILL COUNTY 1A	DIRECT CAPITAL, $	**********	**********	**********
RETROFIT 167MW (GROSS)	INDIRECT CAPITAL, $	**********	**********	**********
STARTUP 2/72 167MW (ESC)	OTHER CAPITAL, $	**********	**********	**********
COAL	TOTAL CAPITAL, $/KW(YEAR)	113.0(1972)	******(0)	******(0)
1.50 %S	DIRECT ANNUAL, $	**********	**********	**********
LIMESTONE	OVERHEAD COST, $	**********	**********	**********
BABCOCK & WILCOX	FIXED CHARGES, $	**********	**********	**********
ENERGY CONSUMPTION: 4.2%	TOTAL ANNUAL, MILLS/KWH(YEAR)	13.1(1975)	******(0)	******(0)
DETROIT EDISON	CAPACITY FACTOR, %	***	65	65
ST. CLAIR 6A	DIRECT CAPITAL, $	**********	**********	**********
RETROFIT 325MW (GROSS)	INDIRECT CAPITAL, $	**********	**********	**********
STARTUP 6/75 163MW (ESC)	OTHER CAPITAL, $	**********	**********	**********
COAL	TOTAL CAPITAL, $/KW(YEAR)	80.3(1976)	******(0)	******(0)
.35 %S SUBBITUMINOUS	DIRECT ANNUAL, $	**********	**********	**********
LIMESTONE	OVERHEAD COST, $	**********	**********	**********
PEABODY PROCESS SYSTEMS	FIXED CHARGES, $	**********	**********	**********
ENERGY CONSUMPTION: 2.8%	TOTAL ANNUAL, MILLS/KWH(YEAR)	9.6(1976)	******(0)	******(0)

****** INDICATES COST FIGURES NOT YET AVAILABLE

SECTION A-2
COSTS FOR NON-OPERATIONAL FGD SYSTEMS

UNIT DESCRIPTION	COST DESCRIPTION	COST REPORTED	COST ADJUSTED	COST STANDARDIZED ADJUSTED
HOOSIER ENERGY	CAPACITY FACTOR, %	***	65	65
MEROM 1	DIRECT CAPITAL, $	24500000.	**********	**********
NEW 490MW (GROSS)	INDIRECT CAPITAL, $	**********	**********	**********
STARTUP 5/82 441MW (ESC)	OTHER CAPITAL, $	**********	**********	**********
COAL	TOTAL CAPITAL, $/KW(YEAR)	50.0(0)	******(0)	******(0)
3.50 %S	DIRECT ANNUAL, $	**********	**********	**********
LIMESTONE	OVERHEAD COST, $	**********	**********	**********
MITSUBISHI HEAVY INDUSTRIES	FIXED CHARGES, $	**********	**********	**********
ENERGY CONSUMPTION: ****%	TOTAL ANNUAL, MILLS/KWH(YEAR)	******(0)	******(0)	******(0)
ILLINOIS POWER COMPANY	CAPACITY FACTOR, %	***	65	65
WOOD RIVER 4	DIRECT CAPITAL, $	**********	**********	**********
RETROFIT 110MW (GROSS)	INDIRECT CAPITAL, $	**********	**********	**********
STARTUP 9/72 110MW (ESC)	OTHER CAPITAL, $	**********	**********	**********
COAL	TOTAL CAPITAL, $/KW(YEAR)	82.5(1972)	******(0)	******(0)
3.10 %S	DIRECT ANNUAL, $	**********	**********	**********
CATALYTIC OXIDATION	OVERHEAD COST, $	**********	**********	**********
MONSANTO ENVIRO CHEM SYSTEMS	FIXED CHARGES, $	**********	**********	**********
ENERGY CONSUMPTION: ****%	TOTAL ANNUAL, MILLS/KWH(YEAR)	******(0)	******(0)	******(0)
LAKELAND UTILITIES	CAPACITY FACTOR, %	***	65	65
MCINTOSH 3	DIRECT CAPITAL, $	11775400.	**********	**********
NEW 364MW (GROSS)	INDIRECT CAPITAL, $	**********	**********	**********
STARTUP 1/82 364MW (ESC)	OTHER CAPITAL, $	**********	**********	**********
COAL	TOTAL CAPITAL, $/KW(YEAR)	32.4(0)	******(0)	******(0)
2.56 %S BITUMINOUS	DIRECT ANNUAL, $	**********	**********	**********
LIMESTONE	OVERHEAD COST, $	**********	**********	**********
BABCOCK & WILCOX	FIXED CHARGES, $	**********	**********	**********
ENERGY CONSUMPTION: ****%	TOTAL ANNUAL, MILLS/KWH(YEAR)	******(0)	******(0)	******(0)
MONTANA POWER	CAPACITY FACTOR, %	***	65	65
COLSTRIP 3	DIRECT CAPITAL, $	76643000.	**********	**********
NEW 700MW (GROSS)	INDIRECT CAPITAL, $	**********	**********	**********
STARTUP 10/83 700MW (ESC)	OTHER CAPITAL, $	**********	**********	**********
COAL	TOTAL CAPITAL, $/KW(YEAR)	109.5(0)	******(0)	******(0)
.70 %S	DIRECT ANNUAL, $	**********	**********	**********
LIME/ALKALINE FLYASH	OVERHEAD COST, $	**********	**********	**********
THYSSEN/CEA	FIXED CHARGES, $	**********	**********	**********
ENERGY CONSUMPTION: ****%	TOTAL ANNUAL, MILLS/KWH(YEAR)	******(0)	******(0)	******(0)
MONTANA POWER	CAPACITY FACTOR, %	***	65	65
COLSTRIP 4	DIRECT CAPITAL, $	70686000.	**********	**********
NEW 700MW (GROSS)	INDIRECT CAPITAL, $	**********	**********	**********
STARTUP 0/84 700MW (ESC)	OTHER CAPITAL, $	**********	**********	**********
COAL	TOTAL CAPITAL, $/KW(YEAR)	101.0(0)	******(0)	******(0)
.70 %S	DIRECT ANNUAL, $	**********	**********	**********
LIME/ALKALINE FLYASH	OVERHEAD COST, $	**********	**********	**********
THYSSEN/CEA	FIXED CHARGES, $	**********	**********	**********
ENERGY CONSUMPTION: ****%	TOTAL ANNUAL, MILLS/KWH(YEAR)	******(0)	******(0)	******(0)
PHILADELPHIA ELECTRIC	CAPACITY FACTOR, %	65	65	65
EDDYSTONE 1A	DIRECT CAPITAL, $	**********	**********	**********
RETROFIT 120MW (GROSS)	INDIRECT CAPITAL, $	**********	**********	**********
STARTUP 9/75 120MW (ESC)	OTHER CAPITAL, $	**********	**********	**********
COAL	TOTAL CAPITAL, $/KW(YEAR)	285.7(1973)	******(0)	******(0)
2.60 %S BITUMINOUS	DIRECT ANNUAL, $	**********	**********	**********
MAGNESIUM OXIDE	OVERHEAD COST, $	**********	**********	**********
UNITED ENGINEERS	FIXED CHARGES, $	**********	**********	**********
ENERGY CONSUMPTION: ****%	TOTAL ANNUAL, MILLS/KWH(YEAR)	6.4(1979)	******(0)	******(0)

****** INDICATES COST FIGURES NOT YET AVAILABLE

SECTION A-2
COSTS FOR NON-OPERATIONAL FGD SYSTEMS

UNIT DESCRIPTION	COST DESCRIPTION	COST REPORTED	COST ADJUSTED	COST STANDARDIZED ADJUSTED
PUBLIC SERVICE OF COLORADO	CAPACITY FACTOR, %	***	65	65
VALMONT 5A	DIRECT CAPITAL, $	**********	**********	**********
RETROFIT 166MW (GROSS)	INDIRECT CAPITAL, $	**********	**********	**********
STARTUP 10/74 166MW (ESC)	OTHER CAPITAL, $	**********	**********	**********
COAL	TOTAL CAPITAL, $/KW(YEAR)	87.0(1974)	******(0)	******(0)
.70 %S SUBBITUMINOUS	DIRECT ANNUAL, $	**********	**********	**********
LIMESTONE/ALKALINE FLYASH	OVERHEAD COST, $	**********	**********	**********
UOP/PUBLIC SERVICE OF COLORADO	FIXED CHARGES, $	**********	**********	**********
ENERGY CONSUMPTION: 3.6%	TOTAL ANNUAL, MILLS/KWH(YEAR)	******(0)	******(0)	******(0)
SOUTH CAROLINA PUBLIC SERVICE	CAPACITY FACTOR, %	***	65	65
CROSS 1	DIRECT CAPITAL, $	**********	**********	**********
NEW 500MW (GROSS)	INDIRECT CAPITAL, $	**********	**********	**********
STARTUP 5/88 500MW (ESC)	OTHER CAPITAL, $	**********	**********	**********
COAL	TOTAL CAPITAL, $/KW(YEAR)	40.0(0)	******(0)	******(0)
1.80 %S BITUMINOUS	DIRECT ANNUAL, $	**********	**********	**********
LIMESTONE	OVERHEAD COST, $	**********	**********	**********
PEABODY PROCESS SYSTEMS	FIXED CHARGES, $	**********	**********	**********
ENERGY CONSUMPTION: ****%	TOTAL ANNUAL, MILLS/KWH(YEAR)	******(0)	******(0)	******(0)
SOUTH CAROLINA PUBLIC SERVICE	CAPACITY FACTOR, %	***	65	65
CROSS 2	DIRECT CAPITAL, $	**********	**********	**********
NEW 500MW (GROSS)	INDIRECT CAPITAL, $	**********	**********	**********
STARTUP 11/83 500MW (ESC)	OTHER CAPITAL, $	**********	**********	**********
COAL	TOTAL CAPITAL, $/KW(YEAR)	40.0(0)	******(0)	******(0)
1.80 %S BITUMINOUS	DIRECT ANNUAL, $	**********	**********	**********
LIMESTONE	OVERHEAD COST, $	**********	**********	**********
PEABODY PROCESS SYSTEMS	FIXED CHARGES, $	**********	**********	**********
ENERGY CONSUMPTION: ****%	TOTAL ANNUAL, MILLS/KWH(YEAR)	******(0)	******(0)	******(0)
TENNESSEE VALLEY AUTHORITY	CAPACITY FACTOR, %	***	65	65
PARADISE 1	DIRECT CAPITAL, $	52500000.	**********	**********
RETROFIT 704MW (GROSS)	INDIRECT CAPITAL, $	**********	**********	**********
STARTUP 0/83 704MW (ESC)	OTHER CAPITAL, $	**********	**********	**********
COAL	TOTAL CAPITAL, $/KW(YEAR)	74.6(0)	******(0)	******(0)
4.20 %S	DIRECT ANNUAL, $	**********	**********	**********
LIMESTONE	OVERHEAD COST, $	**********	**********	**********
GE ENVIRONMENTAL SERVICES	FIXED CHARGES, $	**********	**********	**********
ENERGY CONSUMPTION: ****%	TOTAL ANNUAL, MILLS/KWH(YEAR)	******(0)	******(0)	******(0)
TENNESSEE VALLEY AUTHORITY	CAPACITY FACTOR, %	***	65	65
PARADISE 2	DIRECT CAPITAL, $	52500000.	**********	**********
RETROFIT 704MW (GROSS)	INDIRECT CAPITAL, $	**********	**********	**********
STARTUP 0/83 704MW (ESC)	OTHER CAPITAL, $	**********	**********	**********
COAL	TOTAL CAPITAL, $/KW(YEAR)	74.6(0)	******(0)	******(0)
4.20 %S	DIRECT ANNUAL, $	**********	**********	**********
LIMESTONE	OVERHEAD COST, $	**********	**********	**********
GE ENVIRONMENTAL SERVICES	FIXED CHARGES, $	**********	**********	**********
ENERGY CONSUMPTION: ****%	TOTAL ANNUAL, MILLS/KWH(YEAR)	******(0)	******(0)	******(0)

****** INDICATES COST FIGURES NOT YET AVAILABLE

APPENDIX B

DEFINITIONS

DEFINITIONS

Boiler Commercial Service Date	Date when boiler and auxiliary equipment (including FGD system for new boilers) has met initial supplier guarantees and begins to contribute electrical power to the power grid.
Byproduct Nature	The nature (e.g. elemental sulfur, sulfuric acid) and disposition (e.g. stockpile on site, marketed) of the end product by systems that generate a saleable product.
Commercial Service Date (FGD System)	Date when the FGD system successfully completes compliance testing and the utility is satisfied that the system meets supplier contractual guarantees.
Company Name	Name of corporation as it appears in Electrical World - Directory of Electrical Utilities, McGraw-Hill - Current Edition - as space permits.
Disposal	Disposal method for throwaway product systems producing sludge including: interim and final disposal sites and disposal type (minefill, landfill, etc.) as well as disposal location and site capacity.
Efficiency:	
Total Unit Design Particle Removal Efficiency	The actual percentage of particulate matter removed by the emission control system (mechanical collectors, ESP, or fabric filter and FGD) from the untreated flue gas.
Total Unit SO_2 Design Removal Efficiency	The actual percentage of SO_2 removed from the flue gas by the FGD system.

FGD Viability Indexes	Several parameters have been developed to quantify the viability of FGD system technology. Various terms such as "availability," "reliability," "operability," and "utilization" are used to accurately represent the operation of any FGD system during a given period. The above-mentioned parameters are defined below and discussed briefly. The objectives of this discussion are to make the reader aware that several different definitions are being used and to select appropriate parameters that can be used for reporting purposes so that reasonably consistent comparisons can be made.
Availability Index	Hours the FGD system is available for operation (whether operated or not) divided by hours in period, expressed as a percentage. This parameter tends to overestimate the viability of the FGD system because it does not penalize for election not to operate the system when it could have been operated. Boiler downtime may tend to increase the magnitude of the parameter because FGD failures generally cannot occur during such periods.
Reliability Index	Hours the FGD system was operated divided by the hours the FGD system was called upon to operate, expressed as a percentage. This parameter has been developed in order not to penalize the FGD system for elected outages, e.g., periods when the FGD system could have been run but was not run because of chemical shortages, lack of manpower, short duration boiler operations, etc. The main problem in using this

formula is the concise determination whether or not the system was "called upon to operate" during a given time period. In addition, an undefined value can result when the FGD system is not called upon to operate for a given period (e.g., turbine or boiler outage when FGD system is available).

FGD Operability Index	Hours the FGD system was operated divided by boiler operating hours in period, expressed as a percentage. This parameter indicates the degree to which the FGD system is actually used, relative to boiler operating time. The parameter is penalized when options are exercised not to use the FGD system in periods when the system is operable. In addition, an undefined value can result when the FGD system is not called upon to operate for a given period (e.g., turbine or boiler outage when FGD system is available).
FGD Utilization Index	Hours that the FGD system operated divided by total hours in period. This parameter is a relative stress factor for the FGD system. It is not a complete measure of FGD system viability because the parameter can be strongly influenced by conditions that are external to the FGD system (e.g., infrequent boiler operation will lower the value of the parameter although the FGD system may be highly dependable in its particular application).
End Product	
Sludge	The SO_2 removed from the flue gas is not recovered in a usable or marketable form and resulting sulfur-bearing waste

	products must be disposed in an environmentally acceptable fashion.
Recoverable Byproduct	The SO_2 removed from the flue gas is recovered in a usable or marketable form (e.g., sulfur, sulfuric acid, gypsum, ammonium sulfate, sodium sulfate).
Energy Consumption, %	The percentage of gross unit electrical generating capacity consumed by the FGD system, as defined by the following equation: [Net MW w/o FGD - Net MW w/FGD]/ [Gross unit rating]
Equivalent Scrubbed Capacity (ESC)	The effective scrubbed flue gas in equivalent MW based on the percent of flue gas scrubbed by the FGD system.
FGD Status:	
Category 1	Operational - FGD system is in service removing SO_2.
Category 2	Under construction - ground has been broken for installation of FGD system, but FGD system has not become operational.
Category 3	Planned, Contract Awarded - contract has been signed for purchase of FGD system but ground has not been broken for installation.
Cateogry 4	Planned, Letter of Intent Signed - letter of intent has been signed, but legal contract for purchase has not been awarded.
Category 5	Planned, Requesting/Evaluating Bids - bid requests have been released but no letter of intent or contract has been issued.

Category 6	Considering only FGD Systems - an FGD system is proposed as a means to meet an SO_2 regulation.
Category 7	Considering an FGD system as well as alternative methods.
Category 8	Nonoperational - FGD system has been operated in the past but has been shut down permanently or for an extended indefinite period of time.
Fuel Firing Rate - TPH	Boiler fuel firing rate in terms of tons per hour at maximum continuous load.
Initial Start-Up (FGD System)	Date when flue gas first passes through any component of the FGD system (or is scheduled to do so).
New	FGD unit and boiler were designed at the same time or space for addition of an FGD unit was reserved when boiler was constructed.
Plant Name	Unit identification as it appears in Electrical World - Directory of Electrical Utilities, McGraw-Hill - Current Edition - or as indicated by utility representative for installations in planning stages.
Process Additives	A chemical compound or element which is added to the process or normally found with the main process reagent in small quantities (e.g., Mg, adipic acid) to promote improved process operation (e.g., scale reduction, increased SO_2 removal efficiency).
Process Type	Company name if process is patented. Generic name if several companies have similar processes (e.g., Lime, Limestone, Wellman Lord, Thoroughbred 121).

Regulatory Class	A. Unit(s) subject to Federal New Source Performance Standards (NSPS) promulgated in June 1979. B. Unit(s) subject to Federal New Source Performance Standards (NSPS) promulgated in December 1971. C. Unit(s) subject to standard(s) more stringent than NSPS (6/79). D. Unit(s) subject to standard(s) more stringent than NSPS (12/71), but not more stringent than NSPS (6/79) E. Unit(s) subject to standard(s) equal to or less stringent than NSPS (12/71).
Retrofit	FGD unit will be/was added to an existing boiler not specifically designed to accommodate FGD unit.
SO_2 Removal Mode	The manner in which the SO_2 from the flue gas is collected, e.g., wet scrubbing, spray drying, dry adsorption.
Spare Capacity Index - %	The summation of the individual component capacities (%) minus 100%.
Spare Component Index	The equipment spare capacity index (%) divided by the individual component capacity (%).
System Supplier	A firm that fabricates and supplies flue gas desulfurization systems.
Total Controlled Capacity (TCC)	The gross rating (MW) of a unit brought into compliance with FGD, regardless of the

	percent of flue gas treated at the facility. In the case of prototype and demonstration FGD systems, this figure will be identical to the Equivalent Scrubbed Capacity rather than the gross unit rating if the system is not meant to bring the facility into compliance with SO_2 emission standards.
Unit Rating	
Gross	Operational - Maximum continuous gross generation capacity in MW; Preoperational - maximum continuous design generation capacity in MW.
Net w/FGD	Gross unit rating less the energy required to operate ancillary station equipment, inclusive of emission control systems.
Net w/o FGD	Gross unit rating less the energy required to operate ancillary station equipment, exclusive of emission control systems.

APPENDIX C

TABLE OF UNIT NOTATION

TABLE OF UNIT NOTATION

Classification	English Unit	Symbol	Survey Report Notation	ASTM/SI Unit	Symbol	Survey Report Notation
Area	Acre	acre	ACRE	Square meter	M^2	SQ.M
	Square foot	ft^2	SQ.FT	Square meter	M^2	SQ.M
Concentration	Grains per standard cubic foot	gr/scf	GR/SCF	Grams per cubic meter	g/m^3	G/CU.M
	Parts per million	ppm	PPM	Parts per million	ppm	PPM
	Pounds per million Btu	$lb/10^6$ Btu	LB/MMBTU	Nanograms per joule	ng/J	NG/J
Flow	Actual cubic feet per minute	ft^3/min (actual)	ACFM	Cubic meters per second	m^3/s	CU.M/S
	Gallons per minute	gal/min	GPM	Liters per second	liter/s	LITER/S
	Pounds per minute	lb/min	LB/MIN	Kilogram per second	kg/s	KG/S
	Ton per day	t/day	TPD	Metric ton per day	M t/d	M T/D
	Ton per hour	t/h	TPH	Metric ton per hour	M t/h	M T/H
Heat Content	Btu per pound	Btu/lb	BTU/LB	Joules per gram	J/g	J/G
Length	Foot	ft	FT	Meter	m	M
	Inch	in	IN	Centimeter	cm	CM
	Mile	mi	MI	Kilometer	km	KM
L/G Ratio	Gallons per thousand actual cubic feet	gal/1000 ft^3 (actual)	GAL/1000ACF	Liters per cubic meter	$liter/m^3$	LITER/CU.M
Mass/Weight	Pound	lb	LB	Kilogram	kg	KG
	Ton	t	T	Megagram	Mg	MG
Pressure	Inches of water	in. H_2O	IN. H_2O	Kilopascal	kPa	KPA
Temperature	Degree Fahrenheit	°F	F	Degree Celsius	°C	C
Volume	Cubic feet	ft^3	CU.F	Cubic meter	m^3	CU.M
	Acre-feet	Acre-ft^3	ACRE-FT	Cubic meter	m^3	CU.M

APPENDIX D

FGD PROCESS FLOW DIAGRAMS

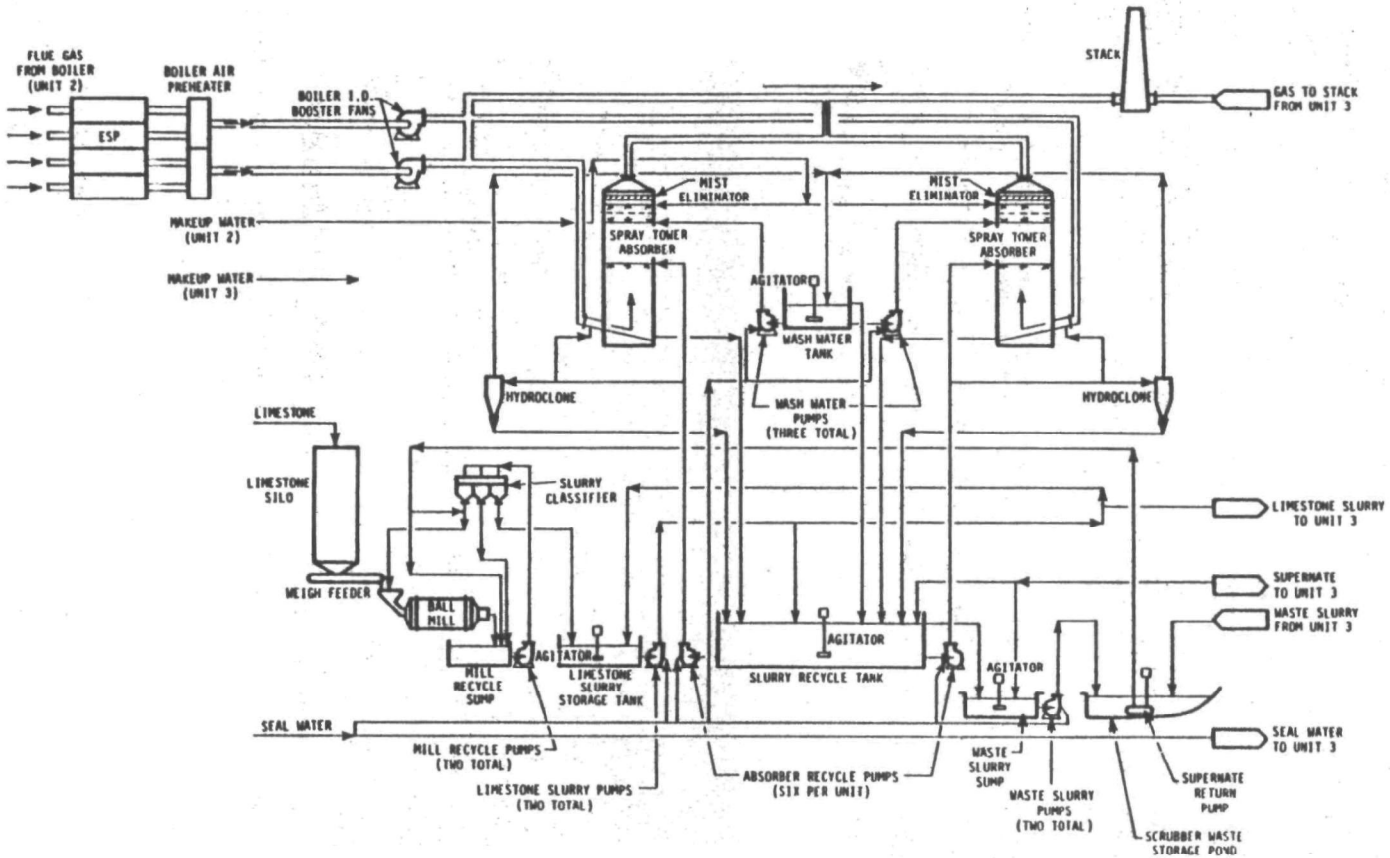

Alabama Electric,
Simplified Process Flow Diagram for Tombigbee 2 and 3

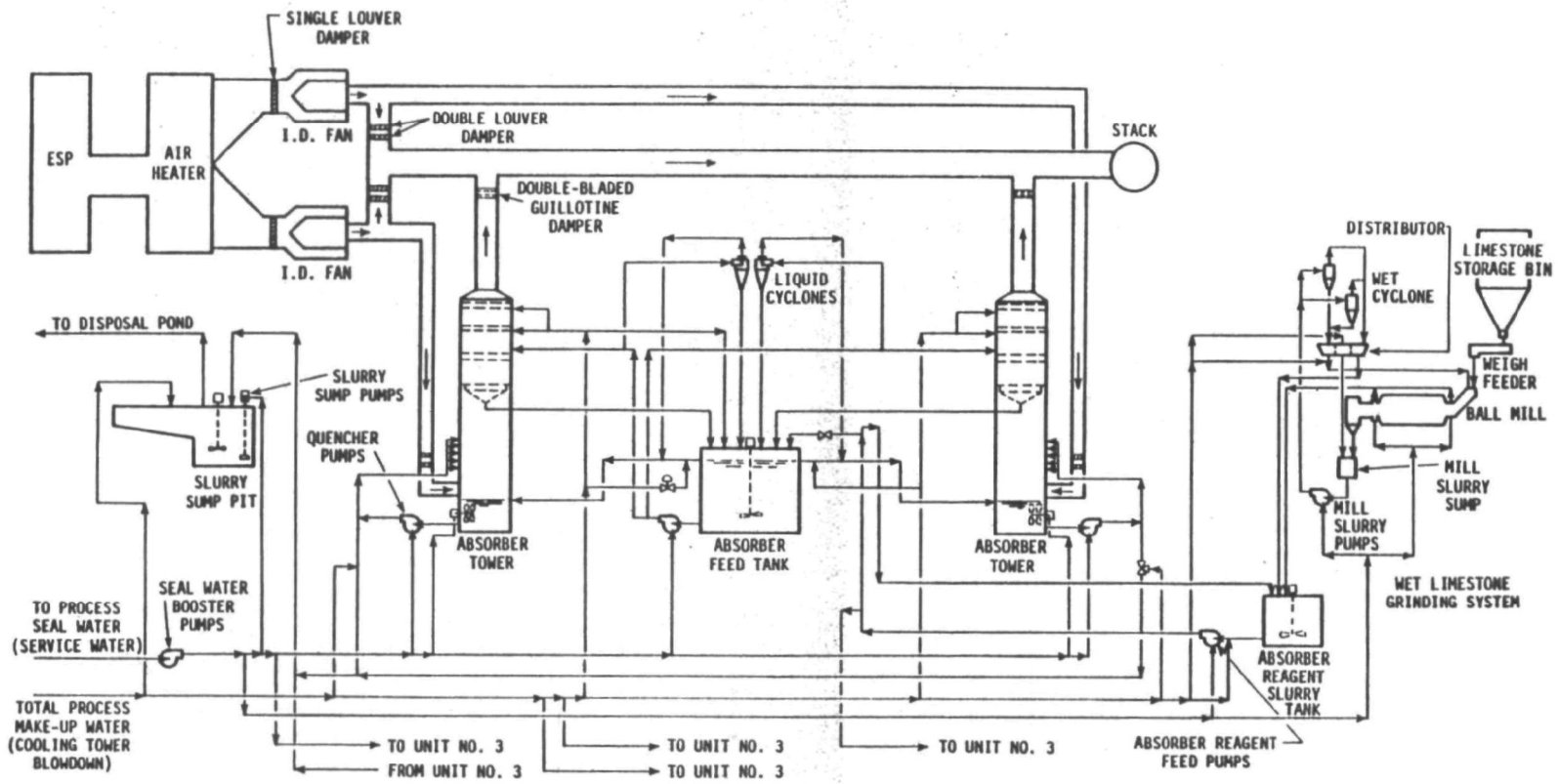

Arizona Electric Power Coop, Apache 2 and 3
Process Flow Diagram

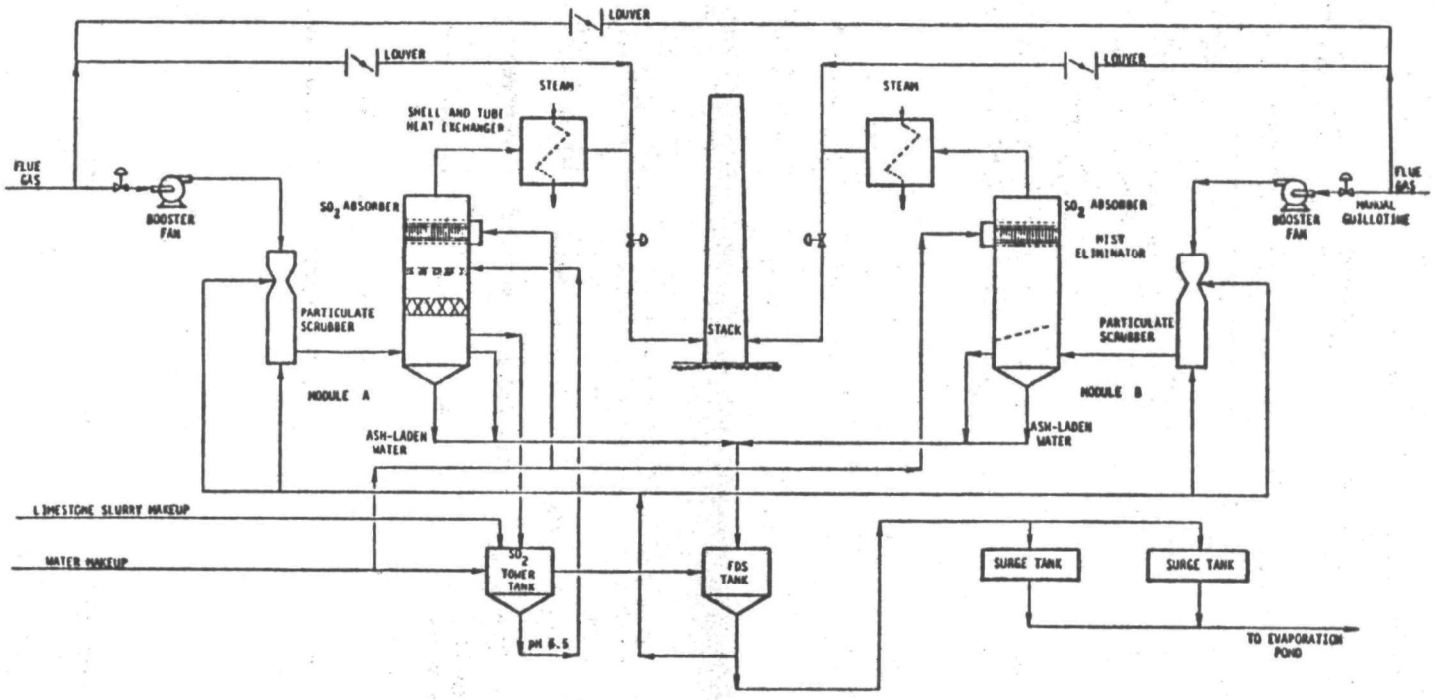

Arizona Public Service, Cholla 1:
Simplified Process Flow Diagram

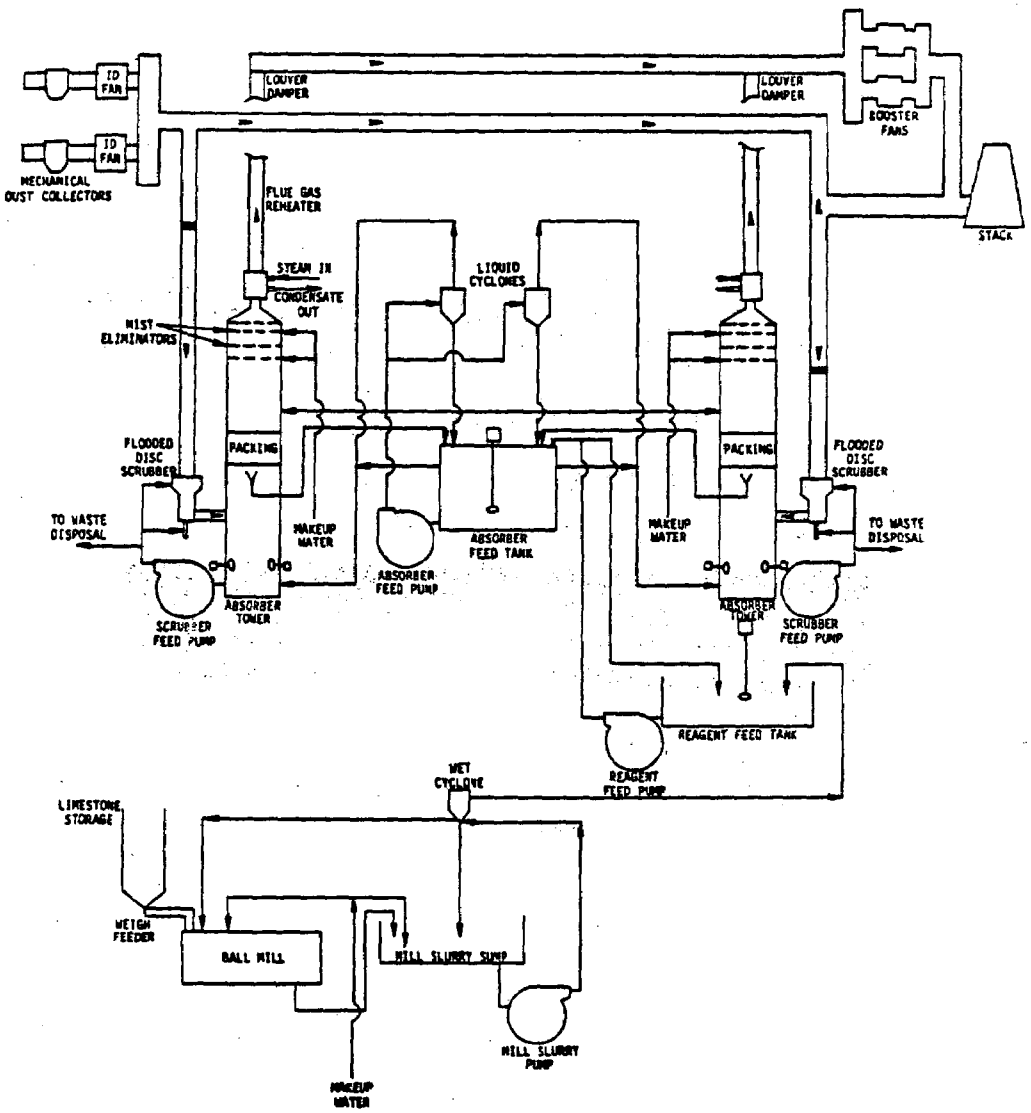

Arizona Public Service, Cholla 2:
Simplified Process Flow Diagram

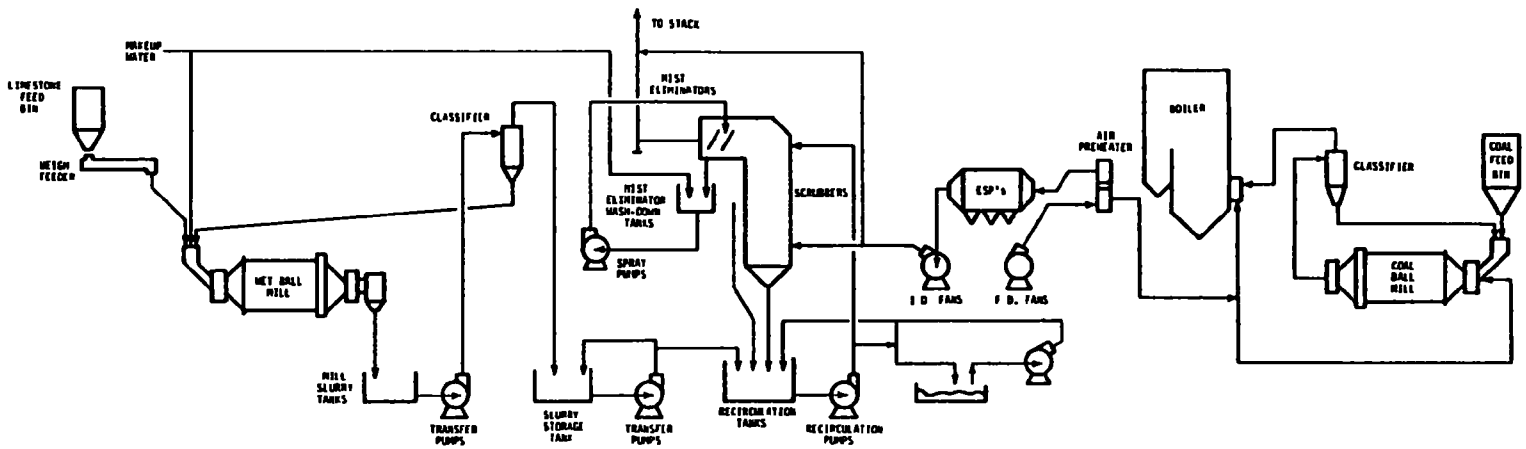

Central Illinois Light,
Simplified Process Flow Diagram of Duck Creek 1
Power Plant and Emission Control System

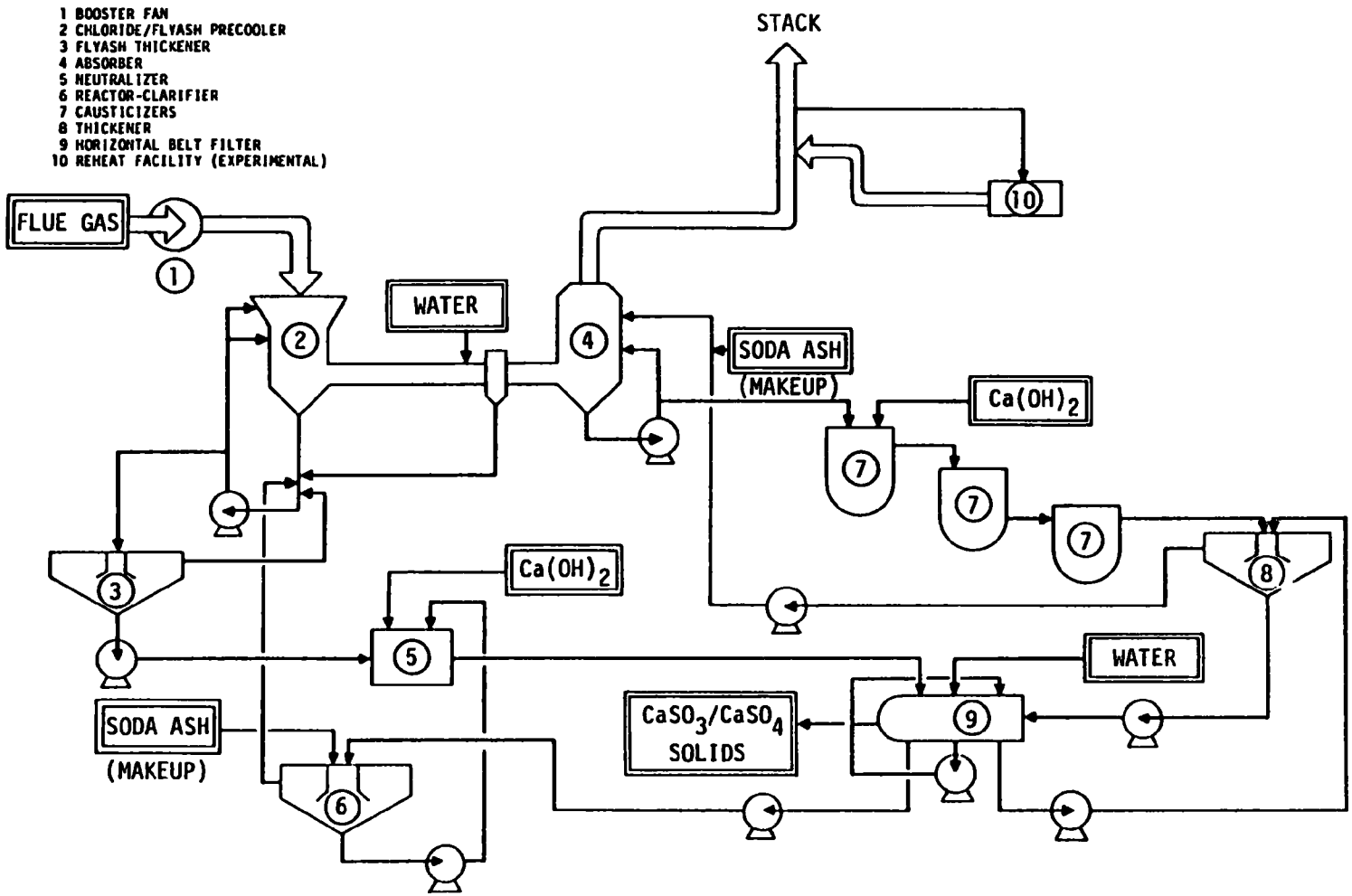

Central Illinois Public Service, Newton 1:
Simplified Process Flow Diagram Showing One of Four Absorbers

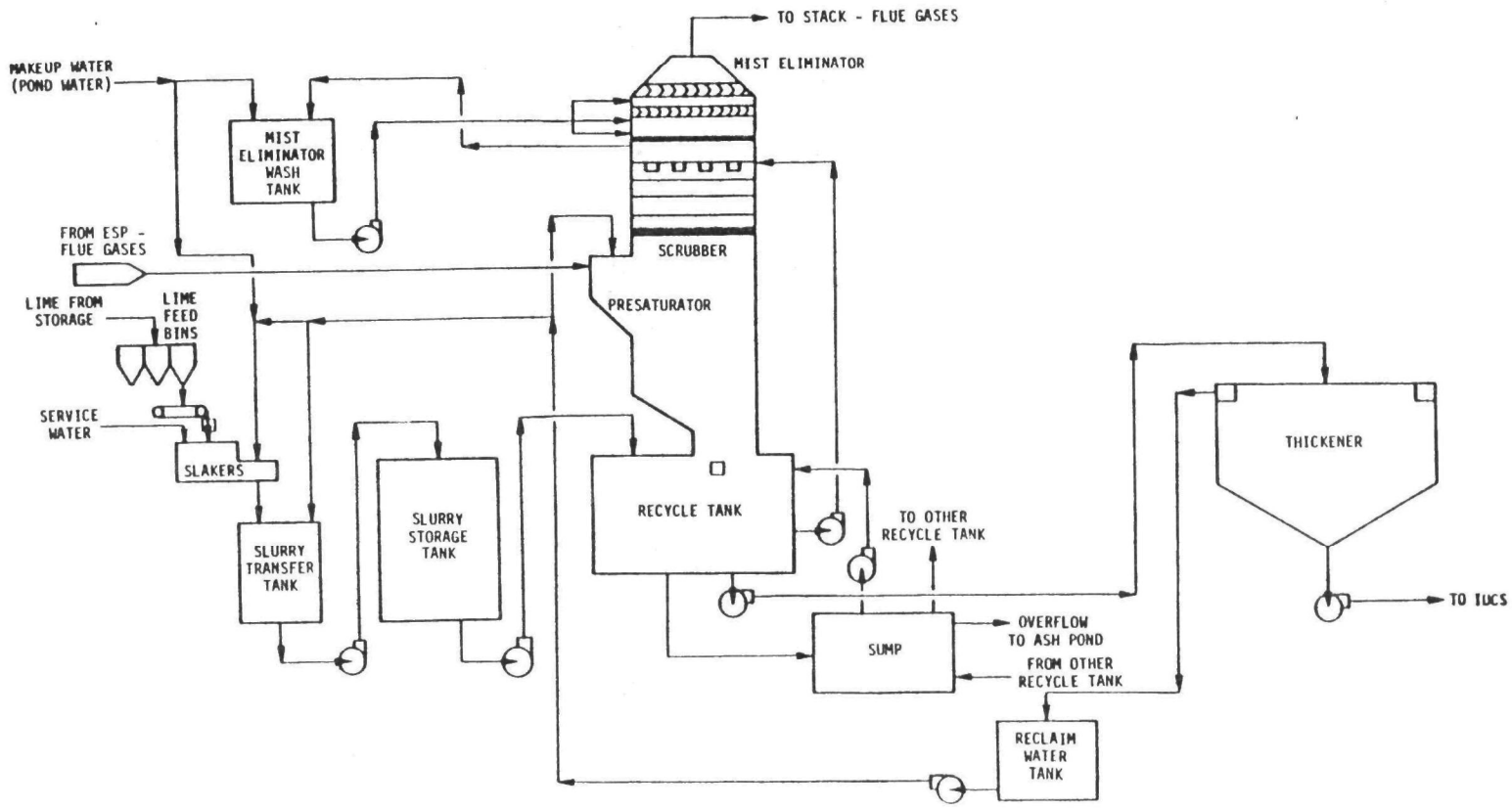

Columbus and Southern Ohio Electric, Conesville 5 and 6:
Simplified Process Flow Diagram for a Given Module

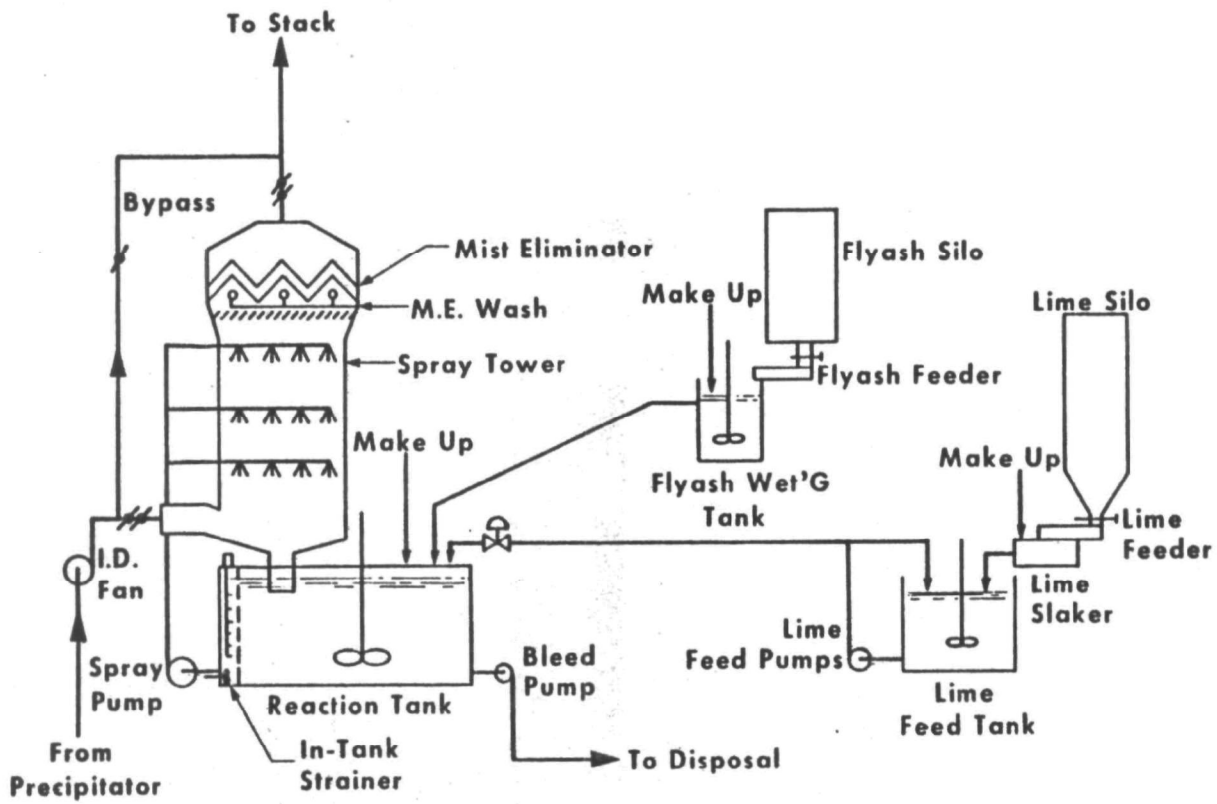

Cooperative Power Association, Coal Creek 1 and 2:
Simplified Process Flow Diagram

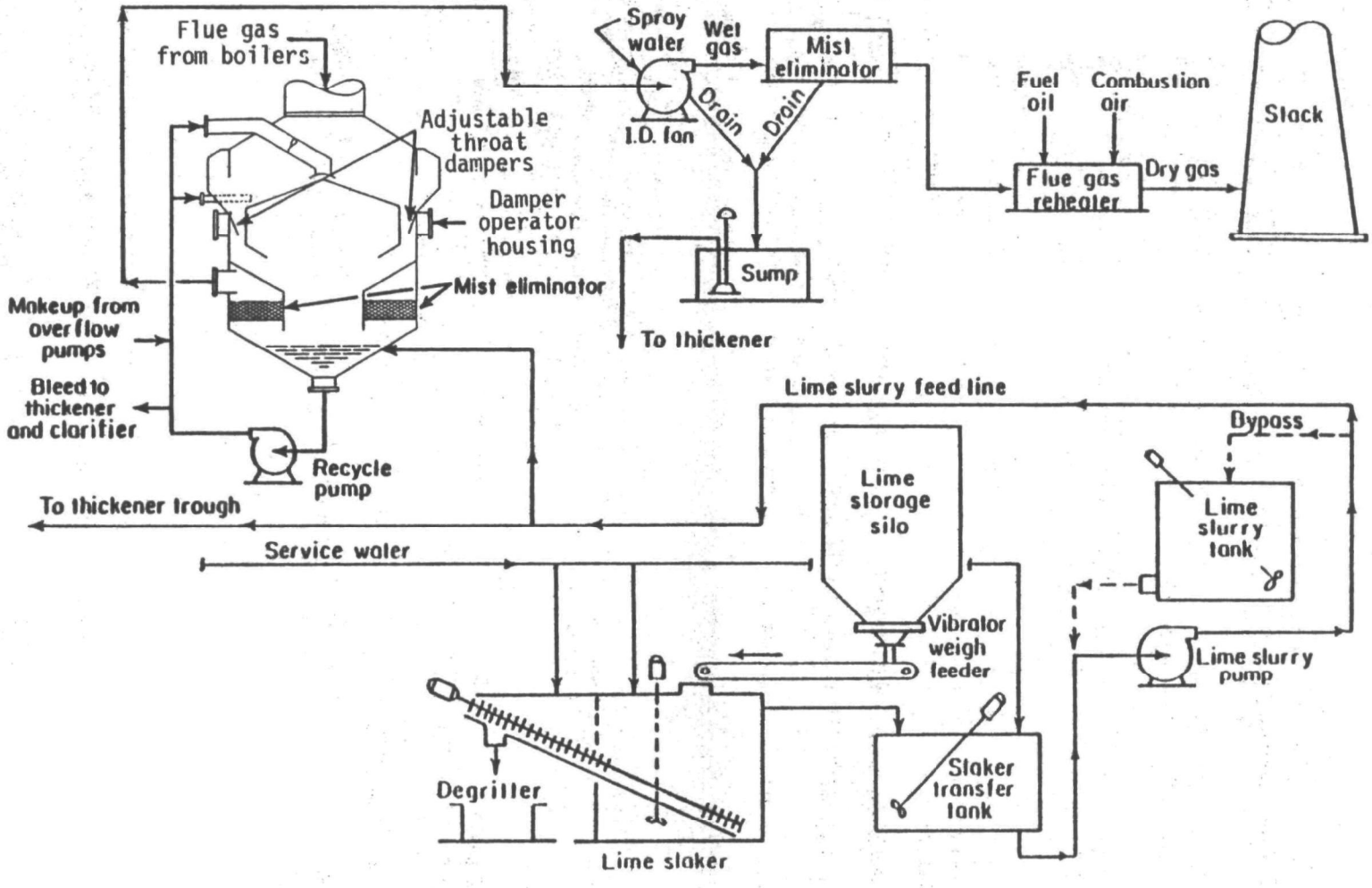

Duquesne Light, Elrama 1-4: Simplified Process Flow Diagram

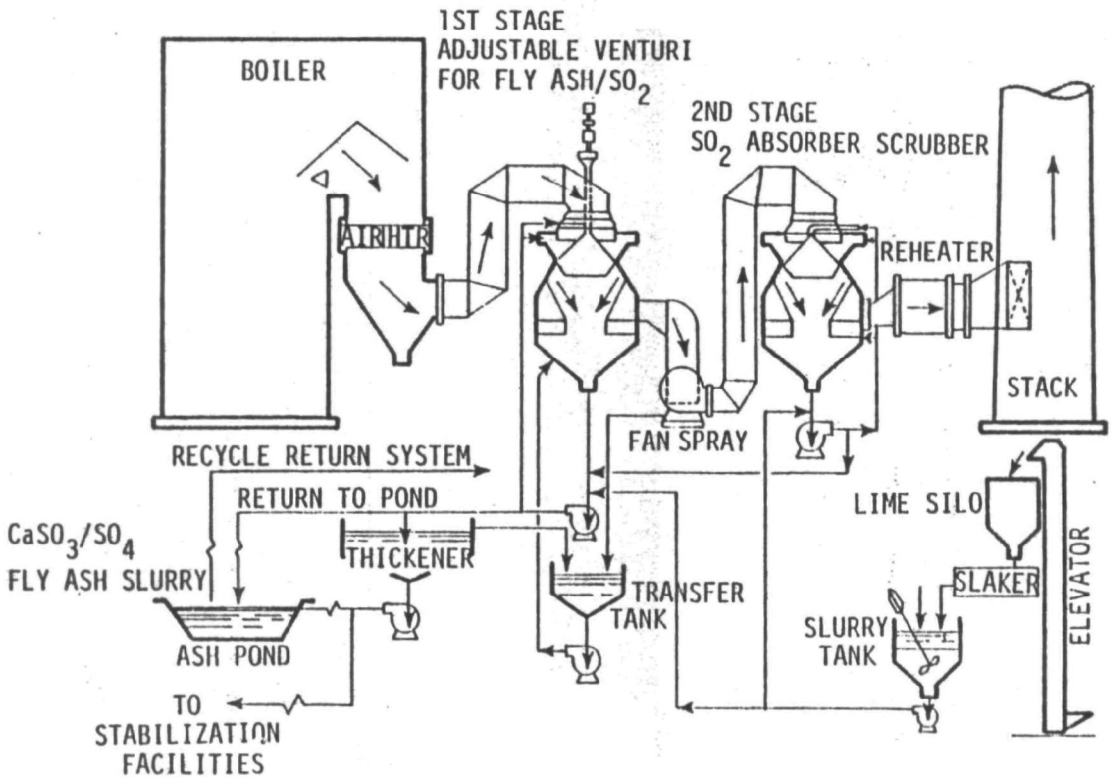

Duquesne Light, F. R. Phillips FGD System:
General Diagram.

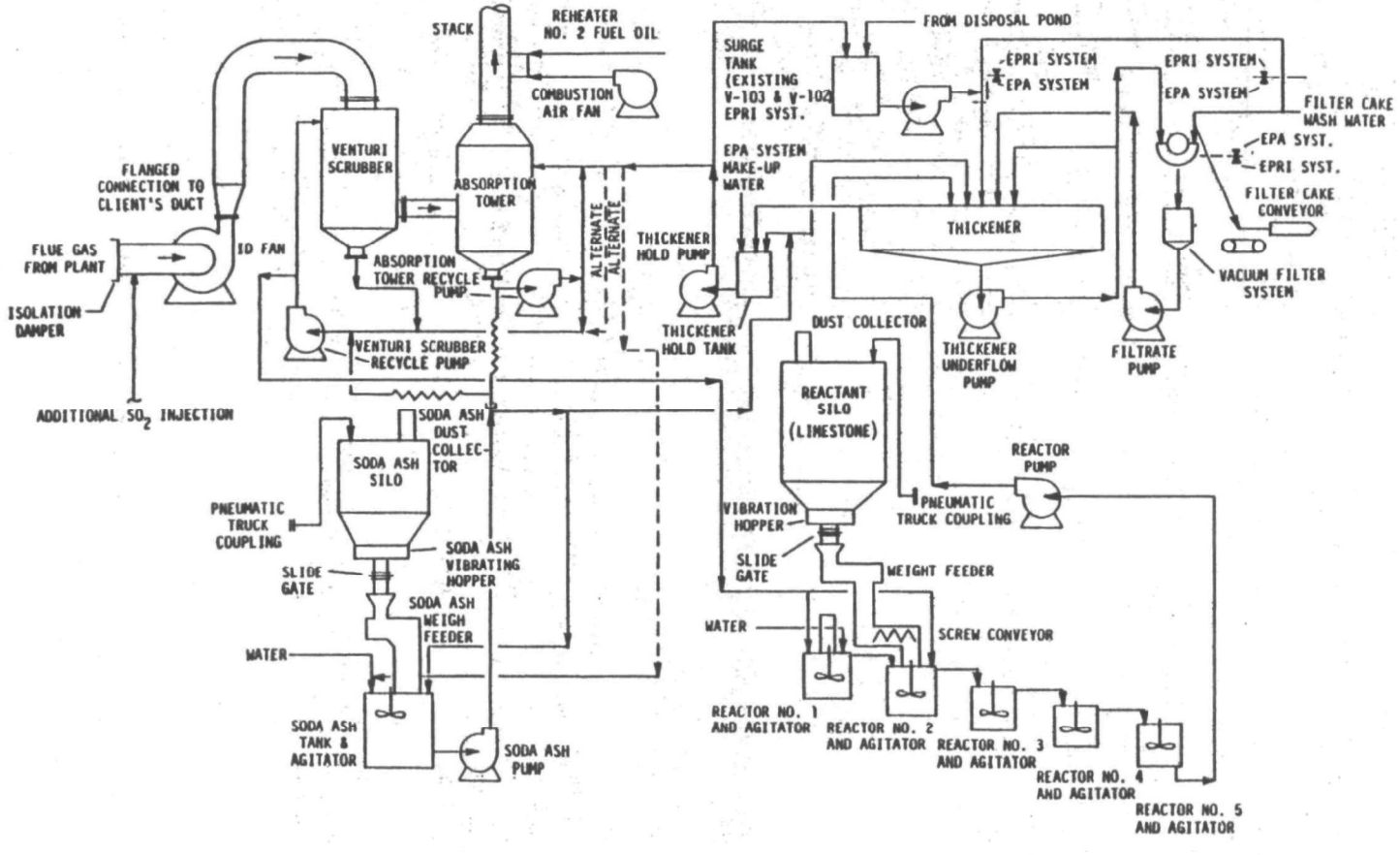

Gulf Power, Scholz 1:
Simplified Process Flow Diagram of the Demonstration
Soda Ash/Limestone Dual Alkali Process

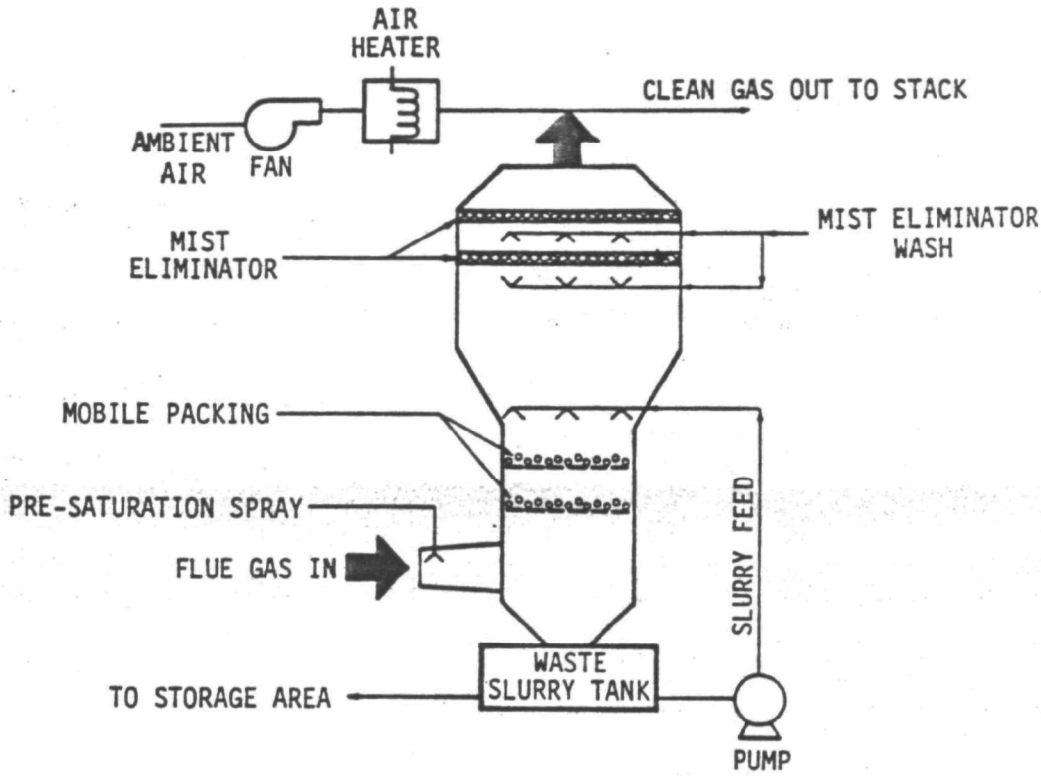

Indianapolis Power and Light, Petersburg 3:
Simplified Process Flow Diagram for One of Four Absorbers

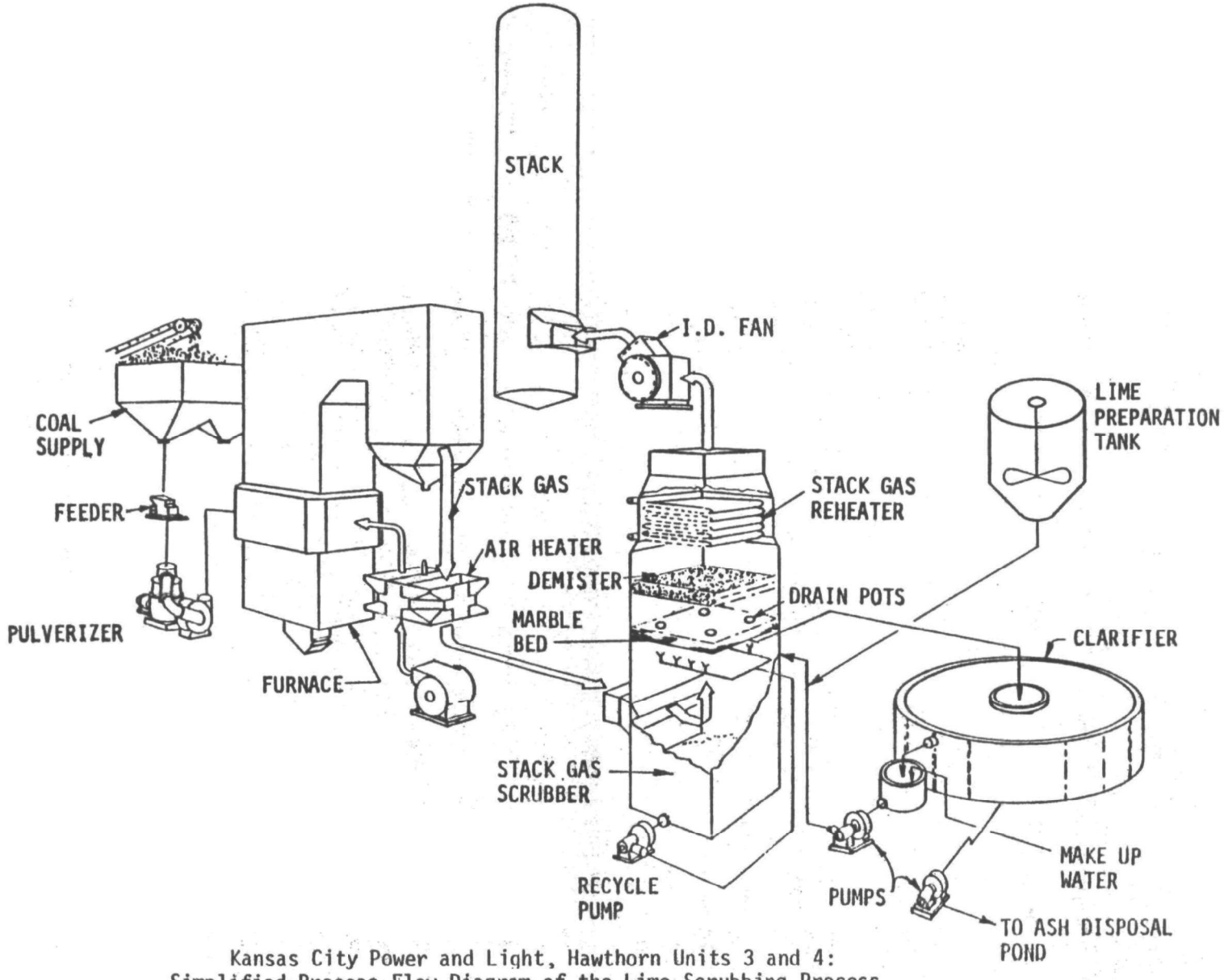

Kansas City Power and Light, Hawthorn Units 3 and 4:
Simplified Process Flow Diagram of the Lime Scrubbing Process

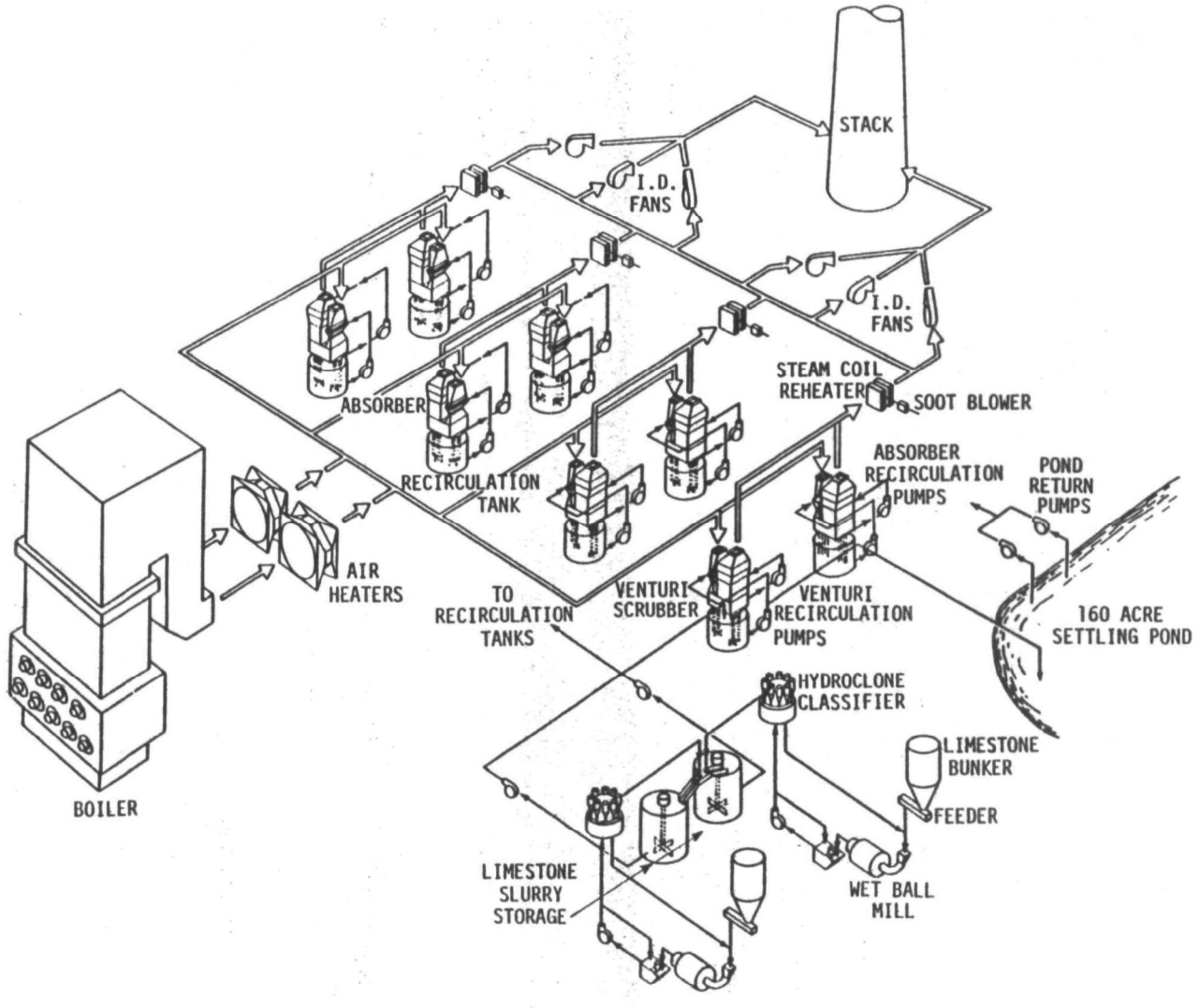

Kansas City Power and Light,
LaCygne 1 FGD System: General Diagram

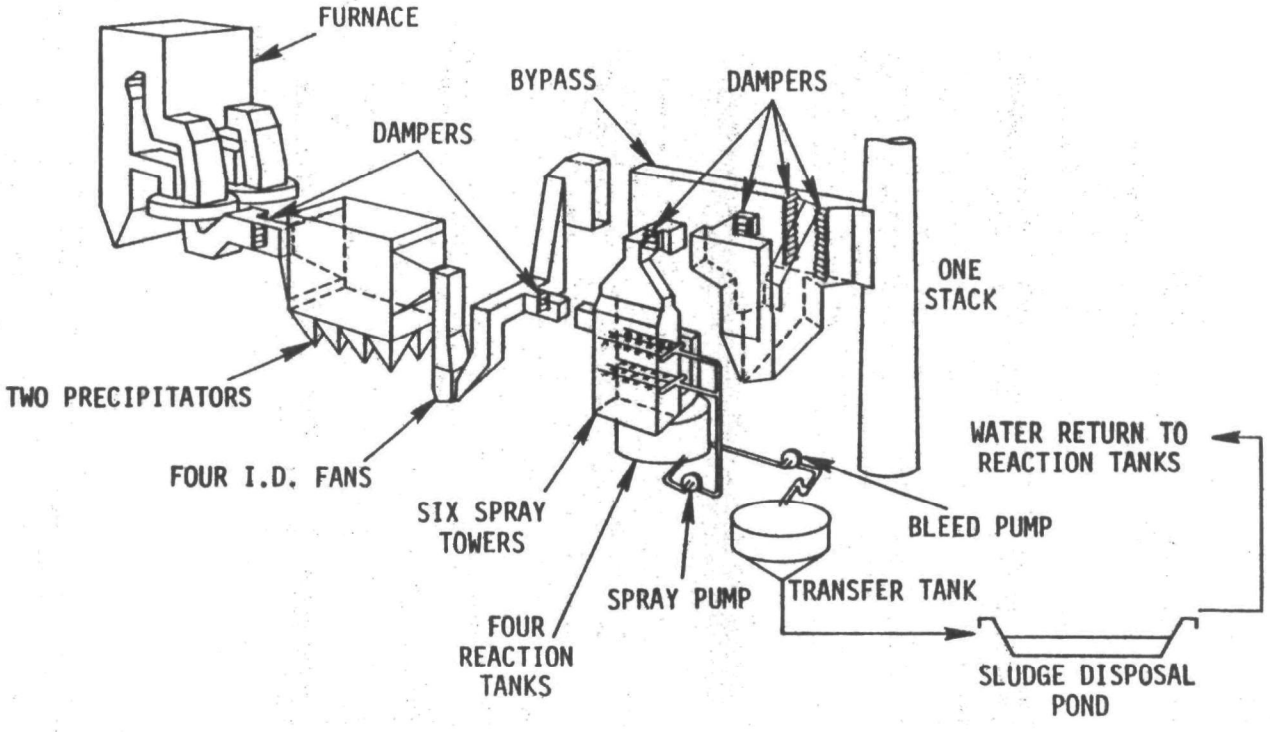

Kansas Power and Light,
Schematic of Jeffrey Steam Generator and Emission Control Equipment

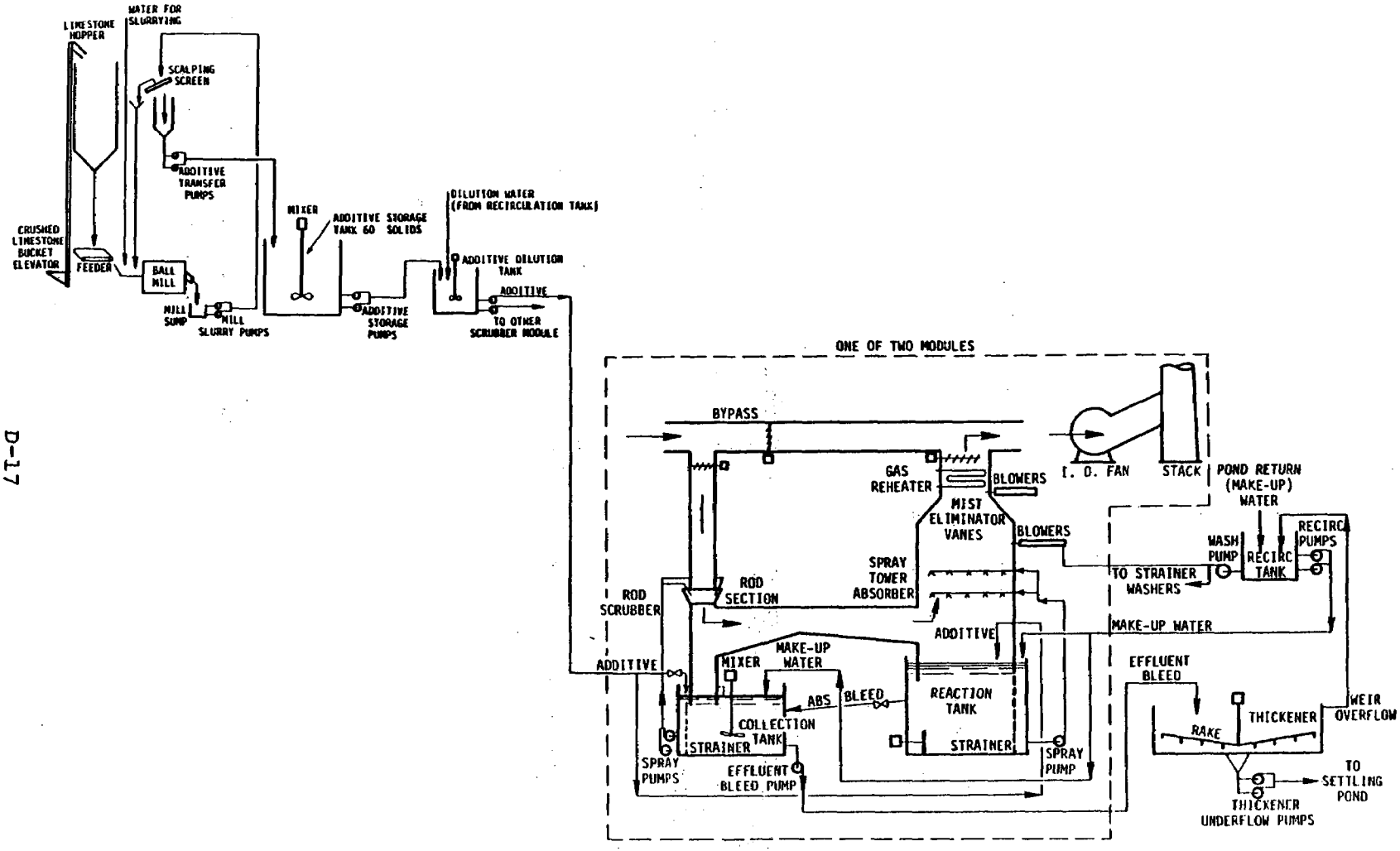

Kansas Power and Light,
Lawrence 4 Operational FGD System:
Simplified Process Flow Diagram

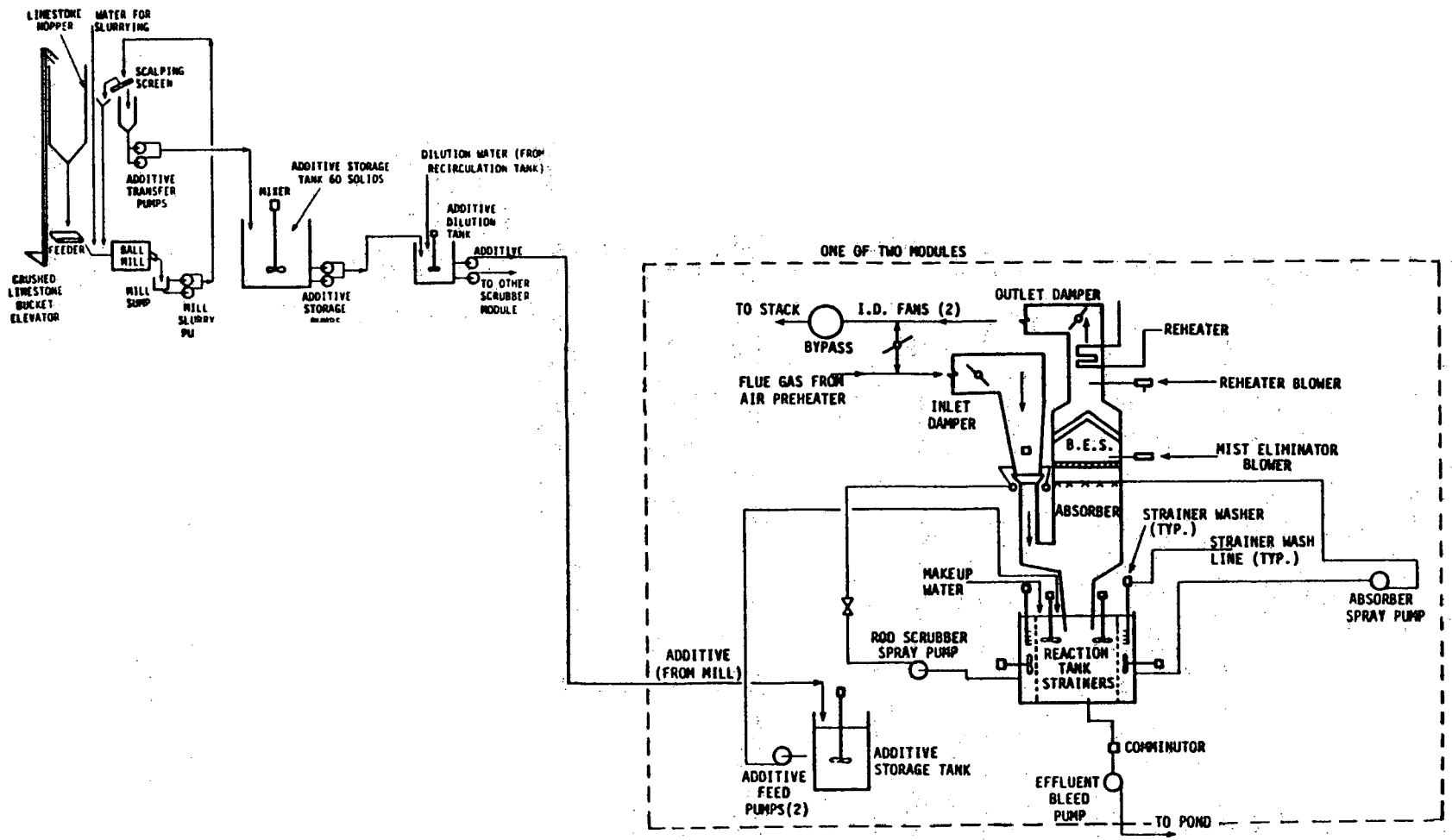

Kansas Power and Light,
Lawrence 5 Operational FGD System:
Simplified Process Flow Diagram

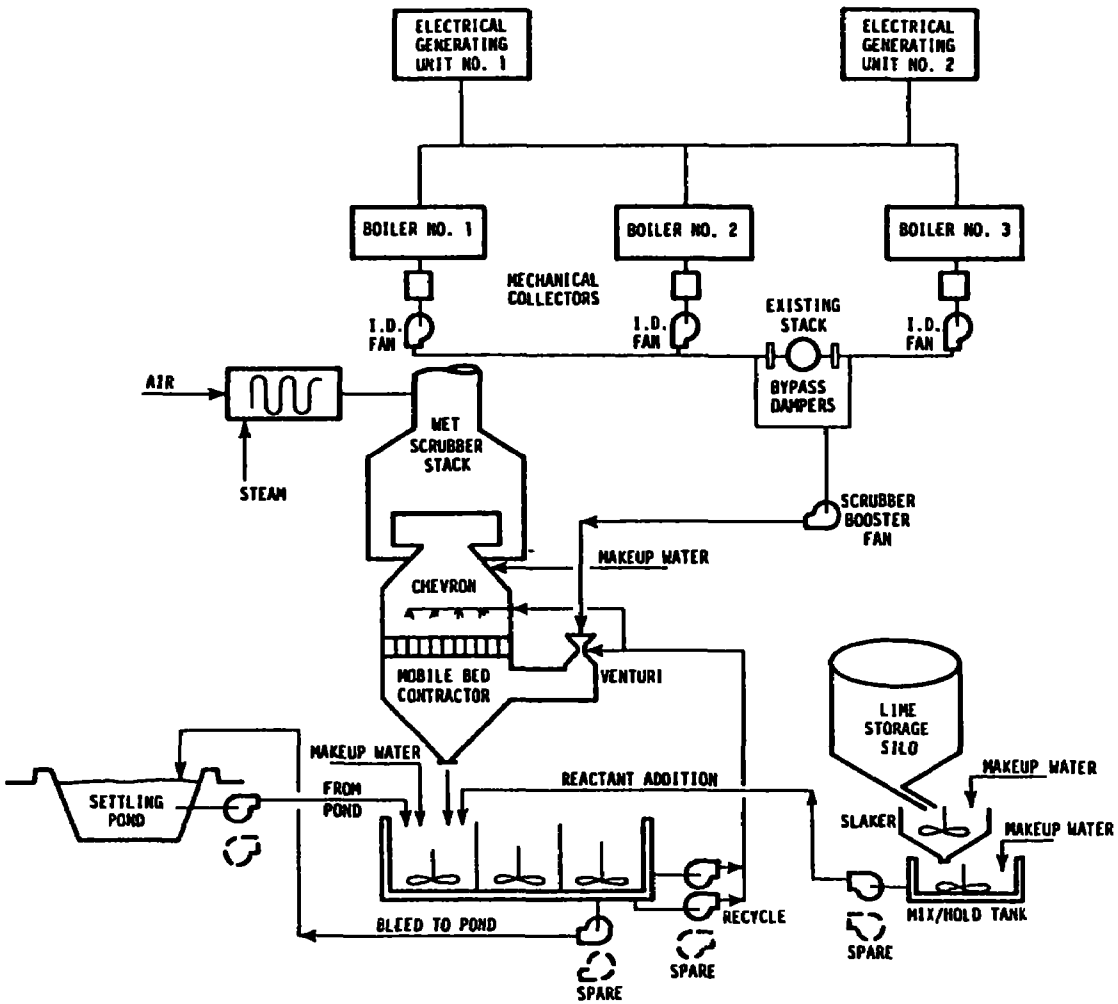

Kentucky Utilities,
Green River FGD System: General Process Diagram

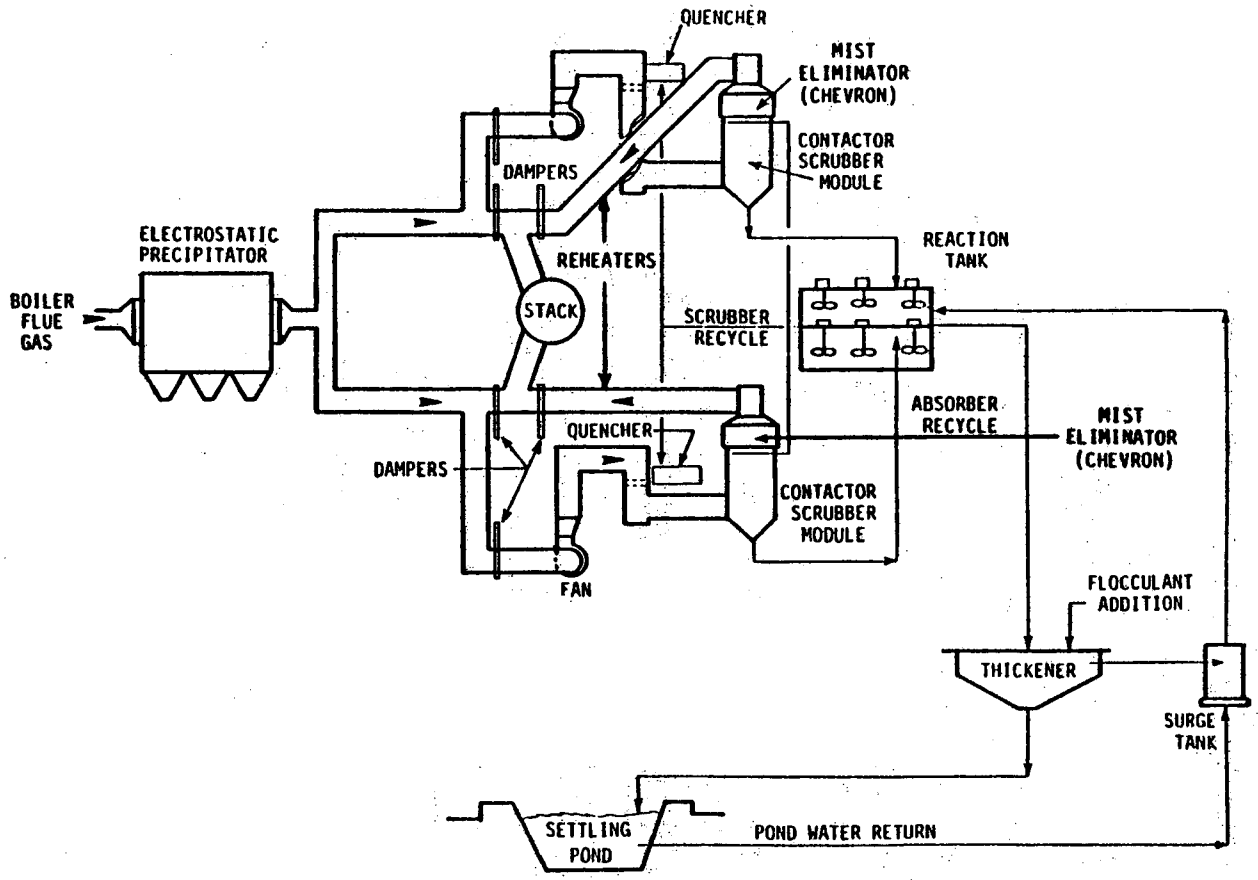

Louisville Gas and Electric, Cane Run 4
FGD System: Simplified Process Flow Diagram

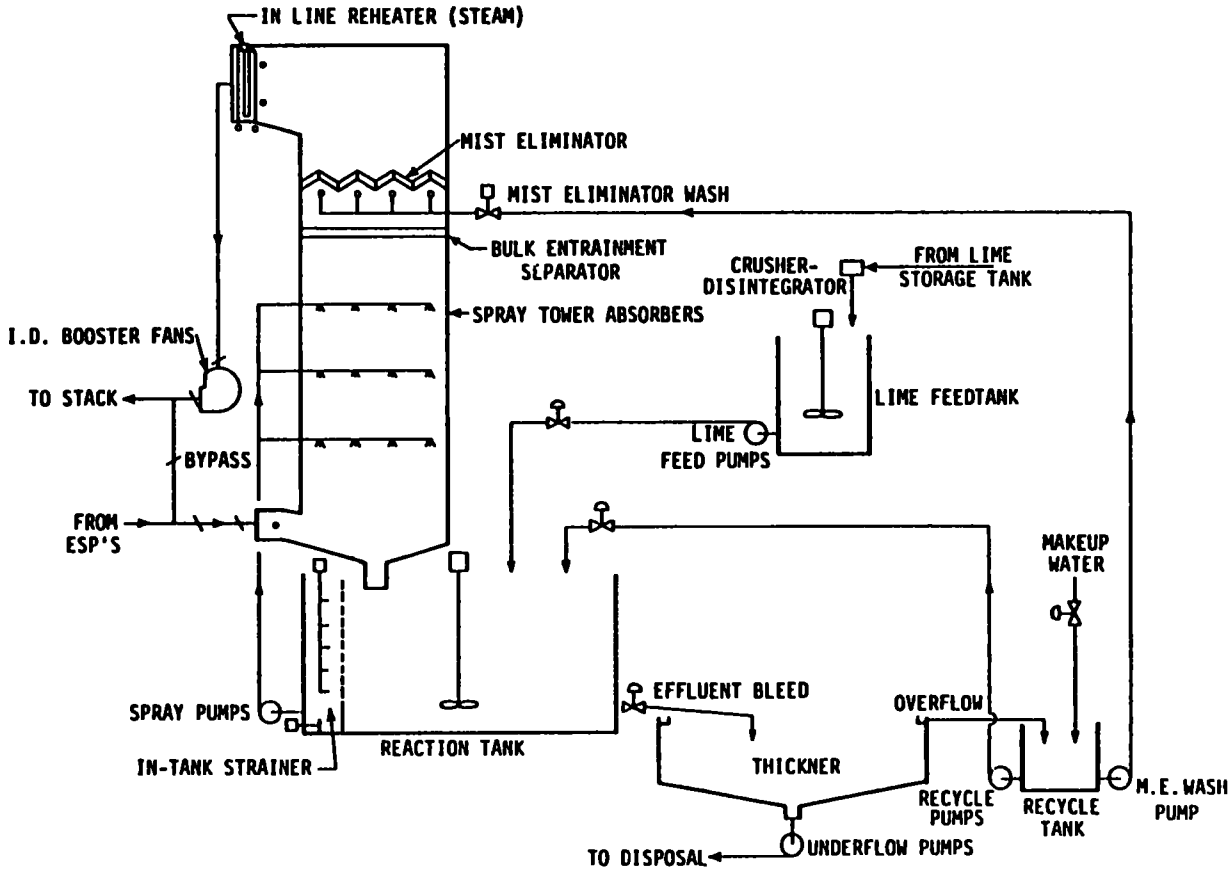

Louisville Gas and Electric, Cane Run 5
FGD System: Simplified Process Flow Diagram

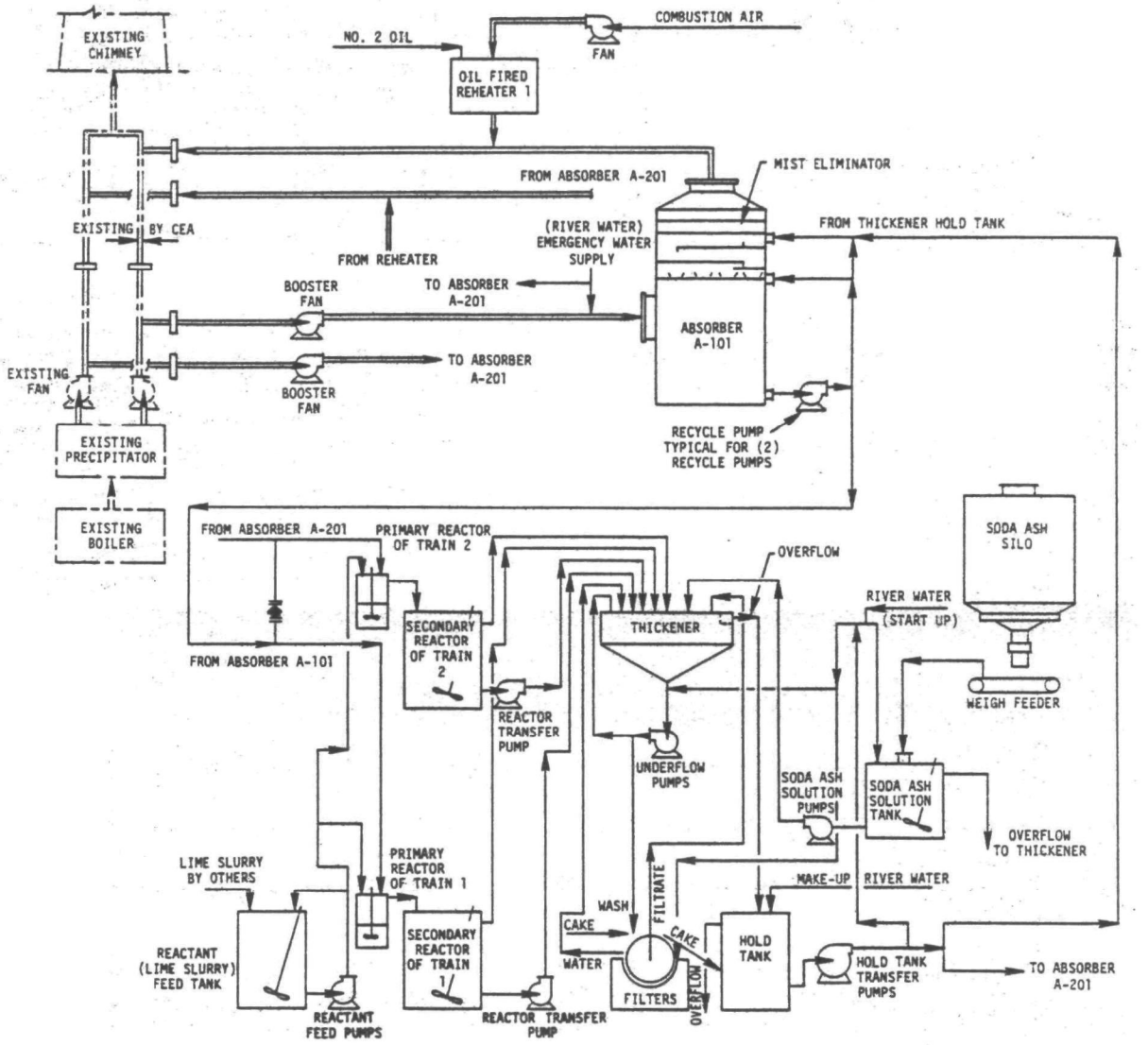

Louisville Gas and Electric, Cane Run 6
Dual Alkali FGD System: Simplified Process Flow Diagram

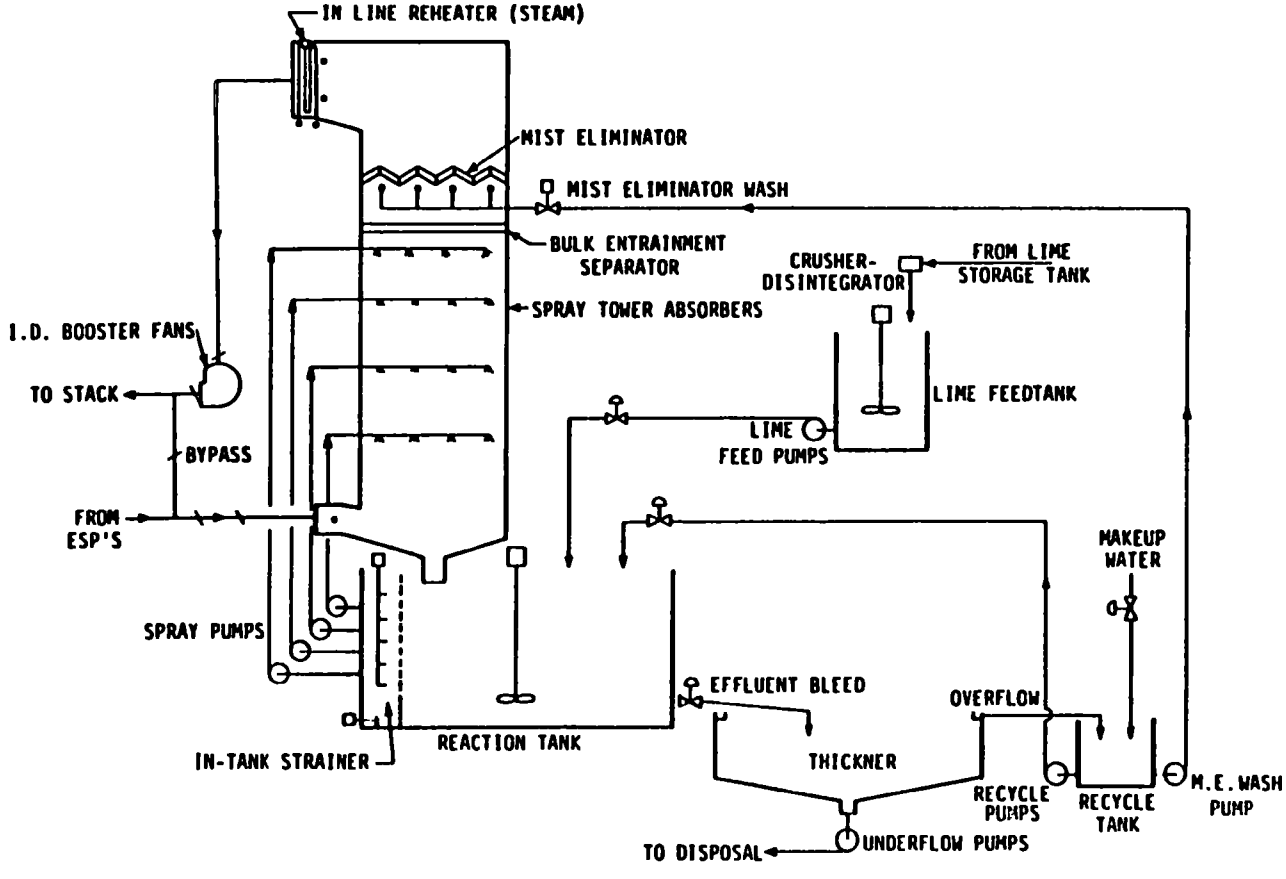

Louisville Gas and Electric,
Mill Creek 1 and 2 FGD System:
Simplified Process Flow Diagram

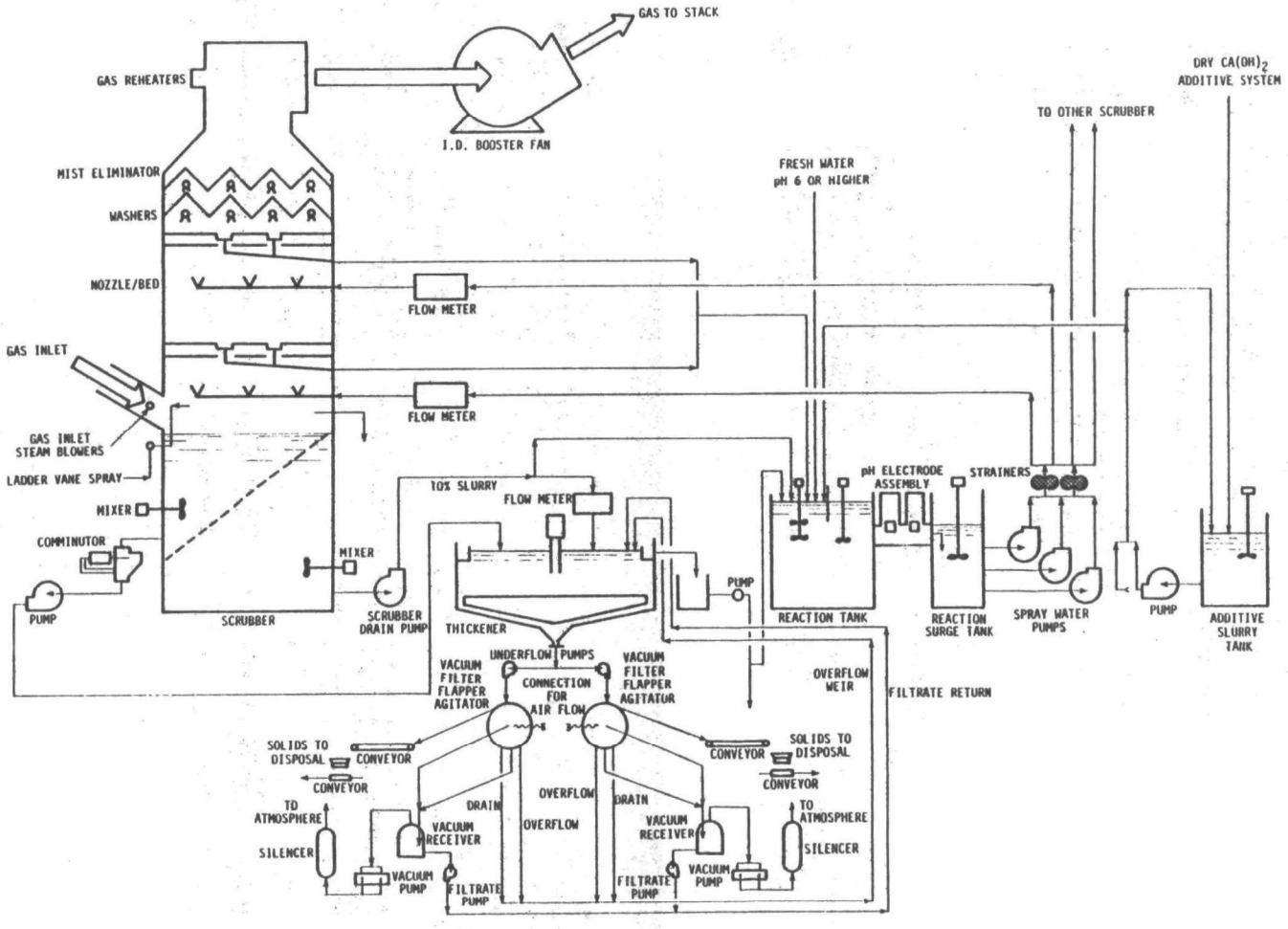

Louisville Gas and Electric,
Paddys Run 6 FGD System:
Simplified Process Flow Diagram

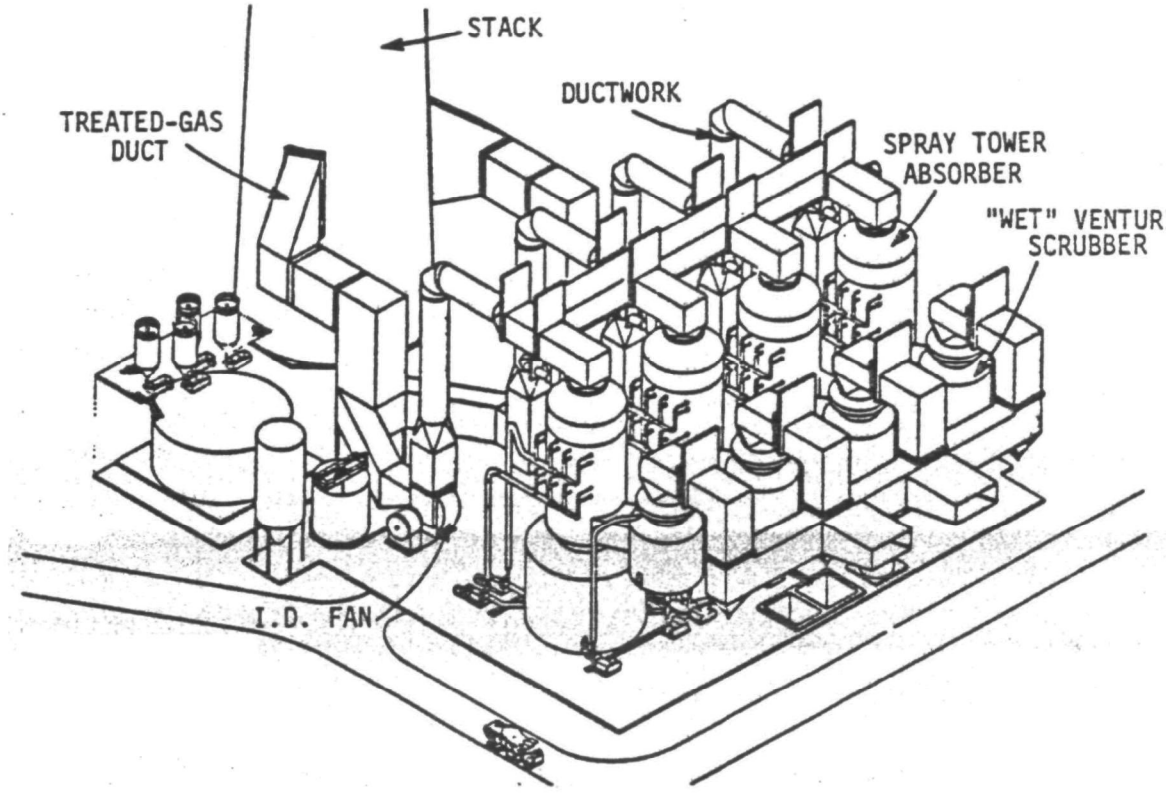

Minnesota Power and Light, Clay Boswell 4:
General Diagram

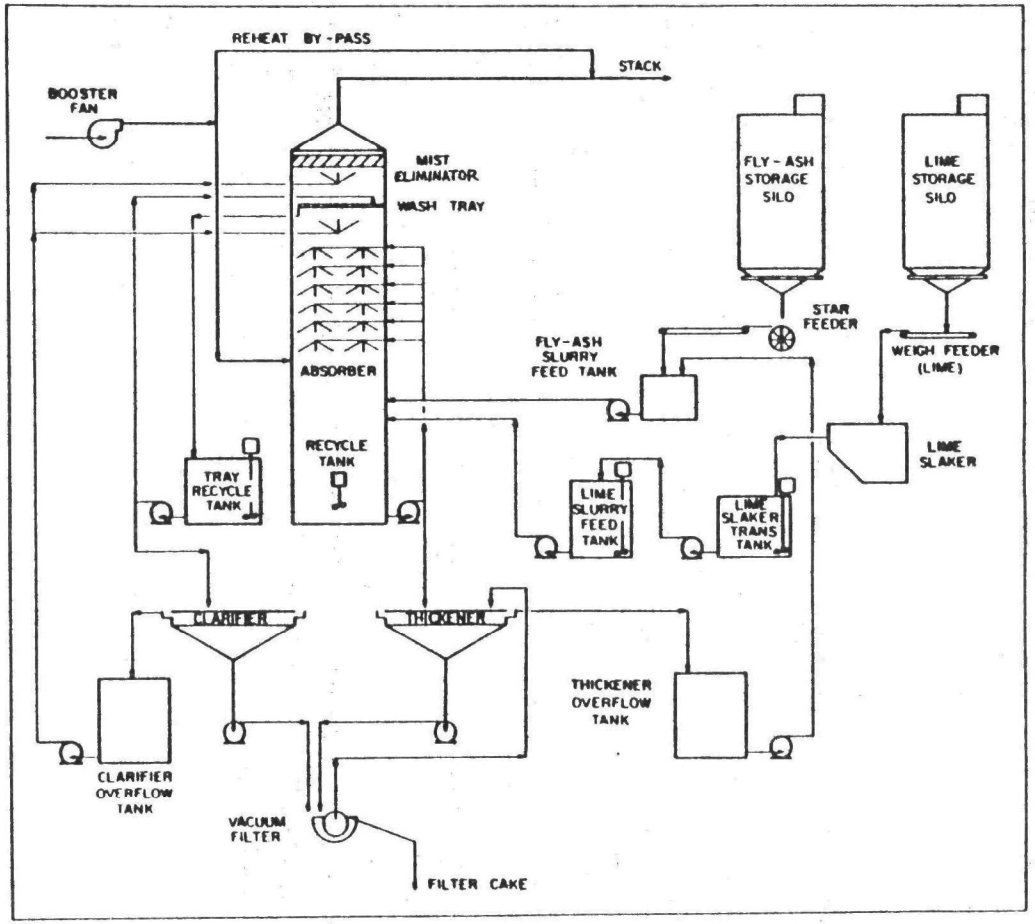

Minnkota Power Cooperative, Milton R. Young 2:
Simplified Process Flow Diagram for One of Two Absorbers

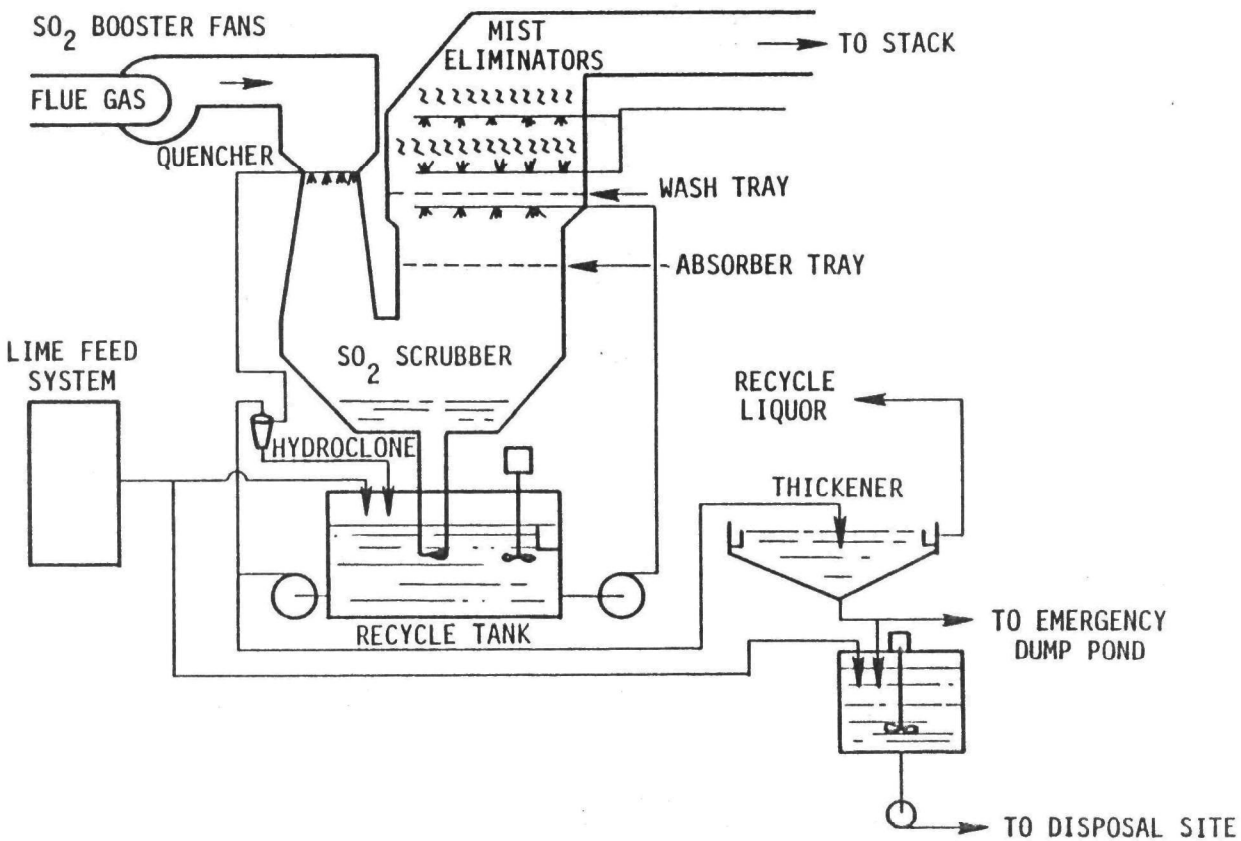

Monongahela Power, Pleasants 1 and 2:
Simplified Process Flow Diagram for One of Four Modules for Either Unit

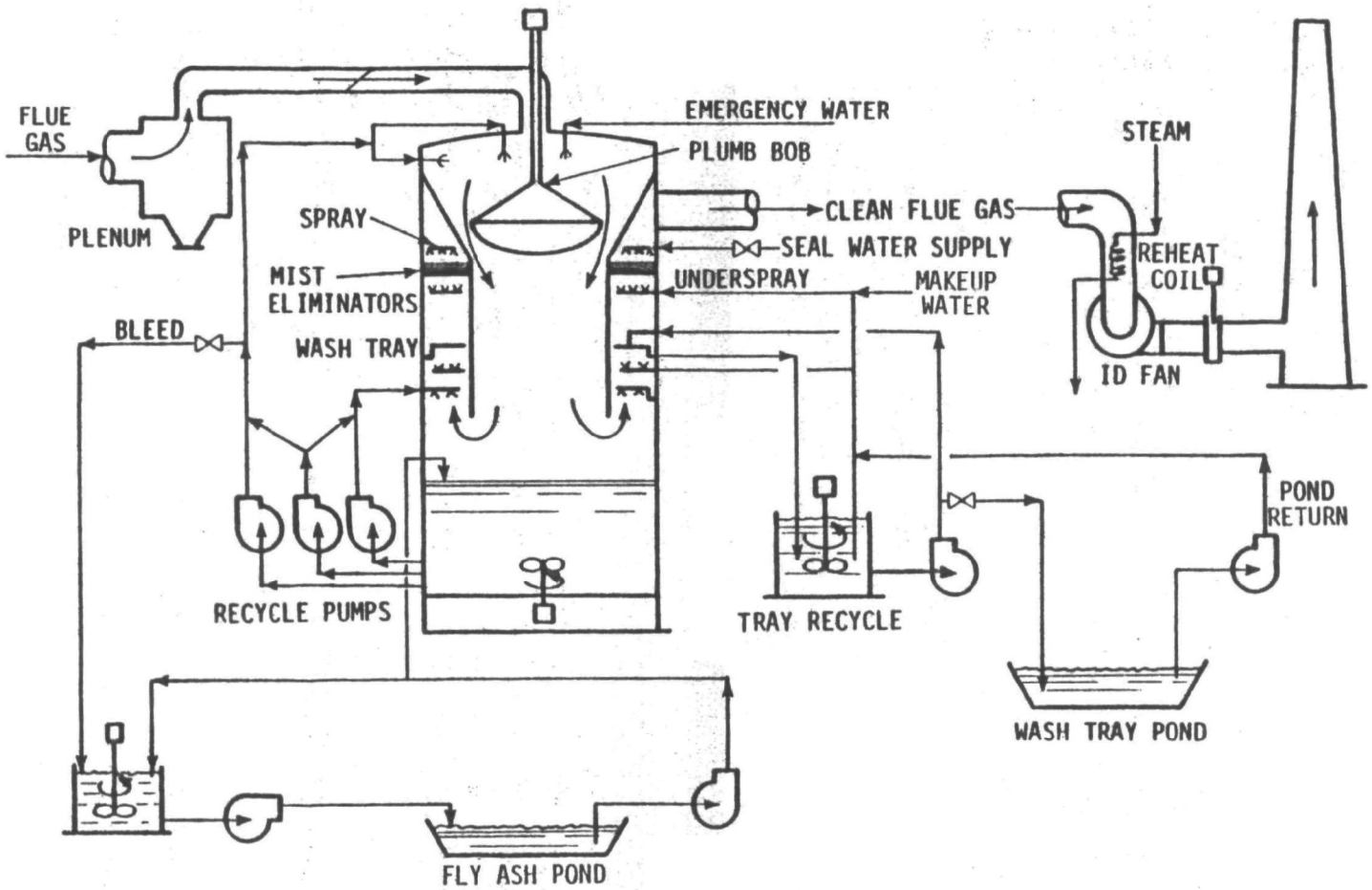

Montana Power, Colstrip 1 and 2:
Process diagram of a given FGD module.

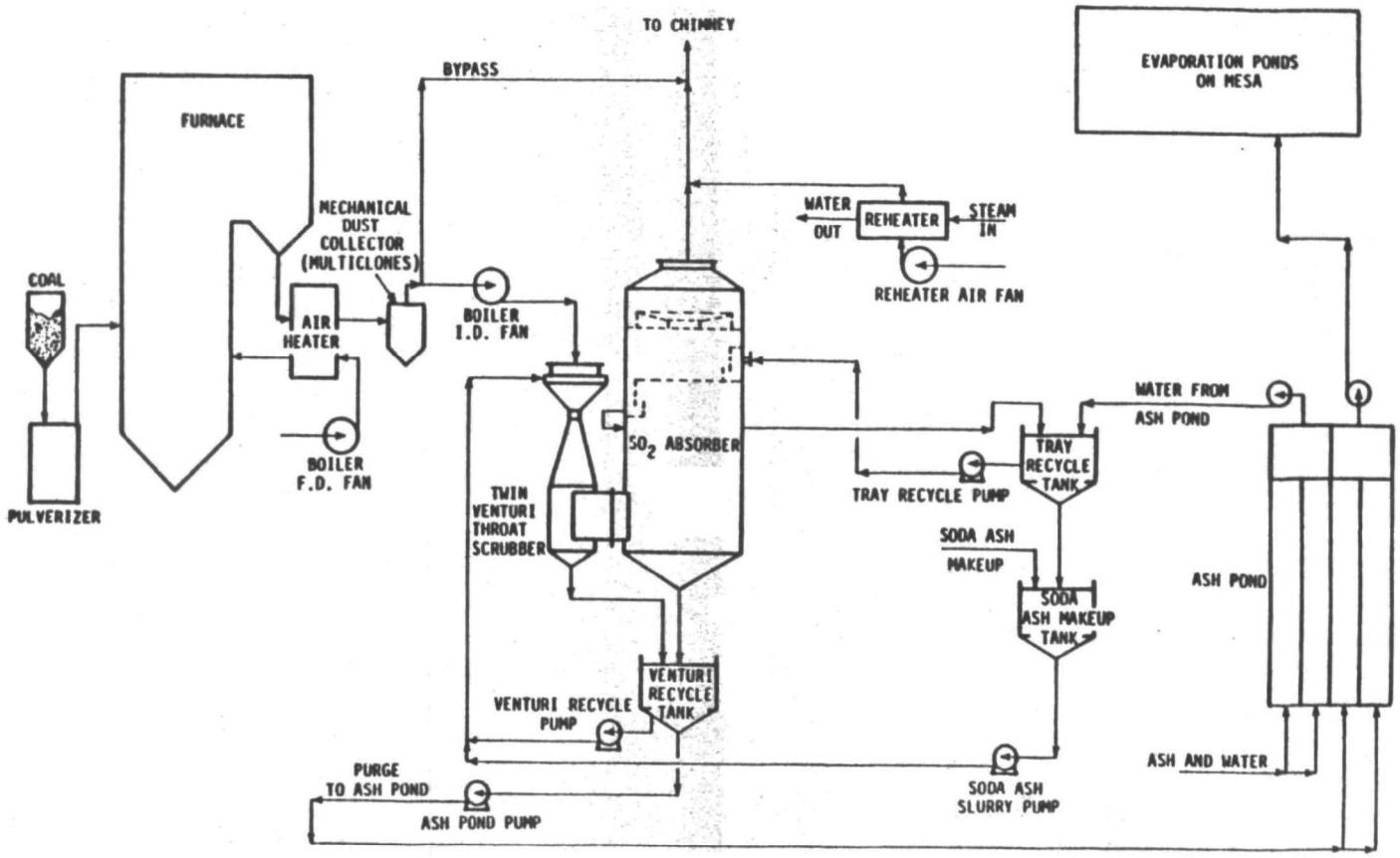

Nevada Power, Reid Gardner 1,2 and 3:
Process diagram of a given FGD system.

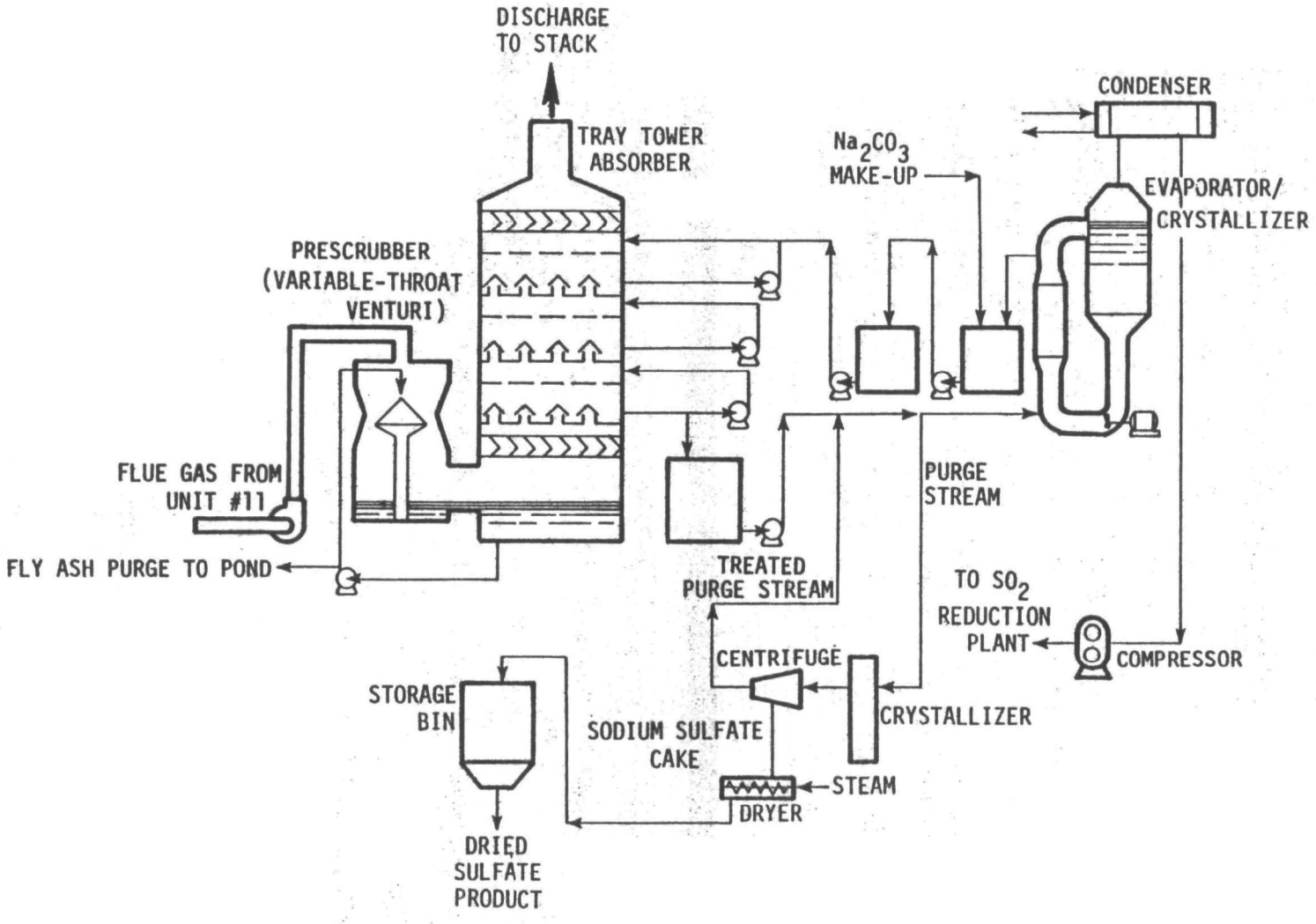

Northern Indiana Public Service,
D. H. Mitchell 11 Wellman Lord/Allied System:
General Process Diagram.

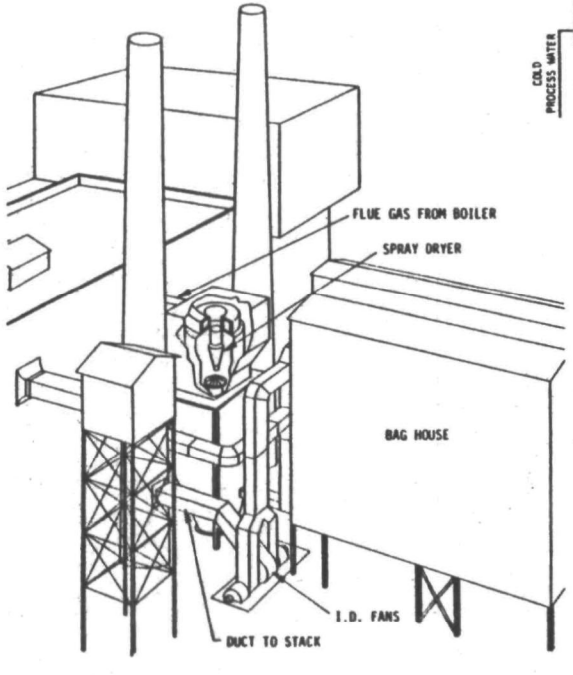

Spray Dryer Cutaway View

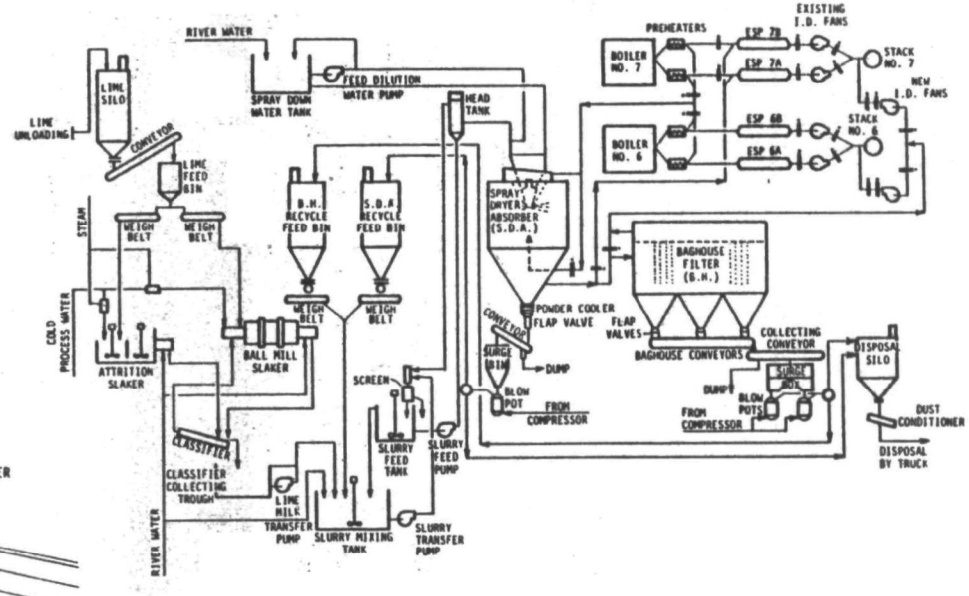

Simplified Process Flow Diagram

Northern States Power, Riverside 6,7: FGD System Flow Diagrams

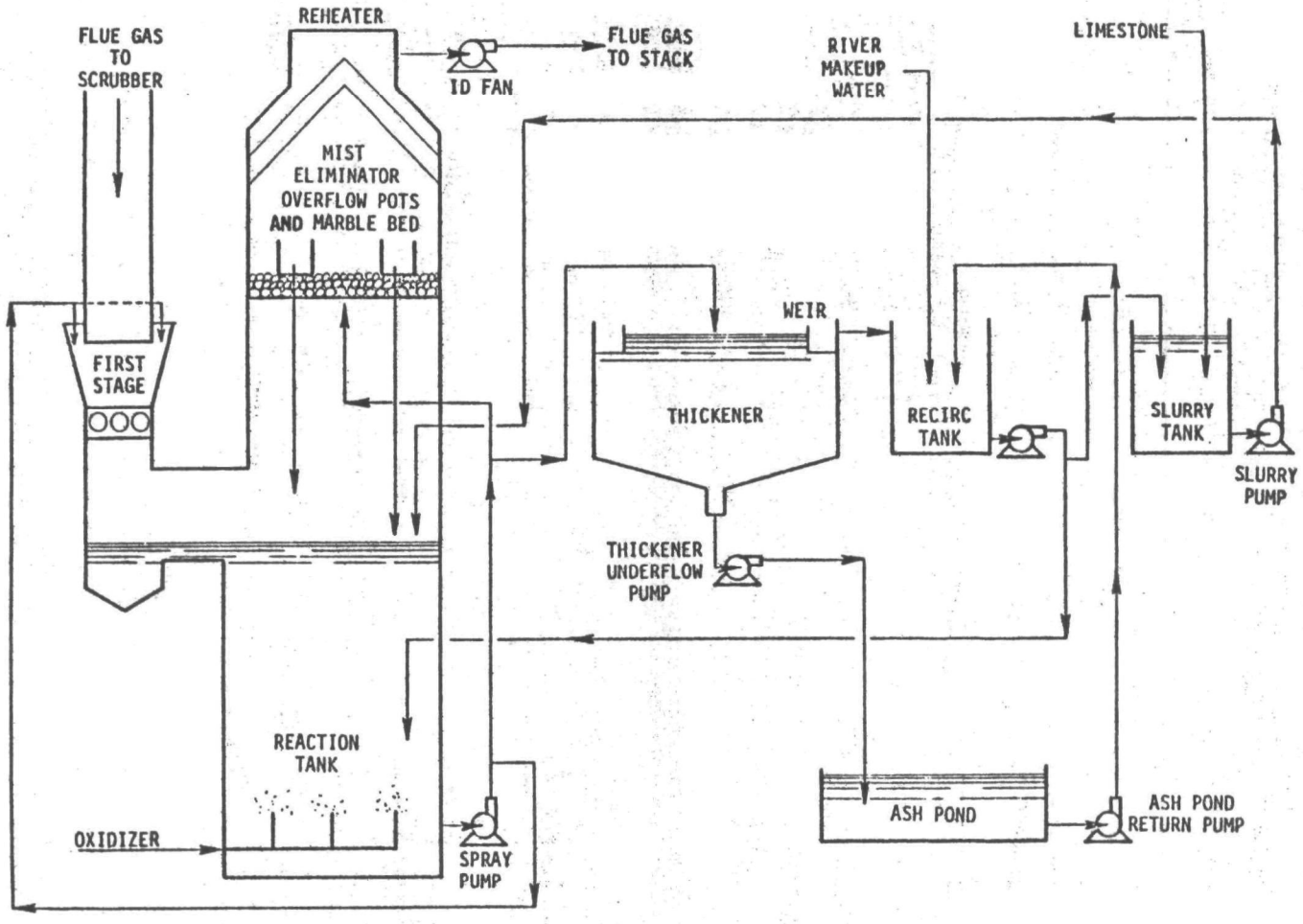

Northern States Power, Sherburne 1 and 2 FGD System:
Simplified Process Flow Diagram

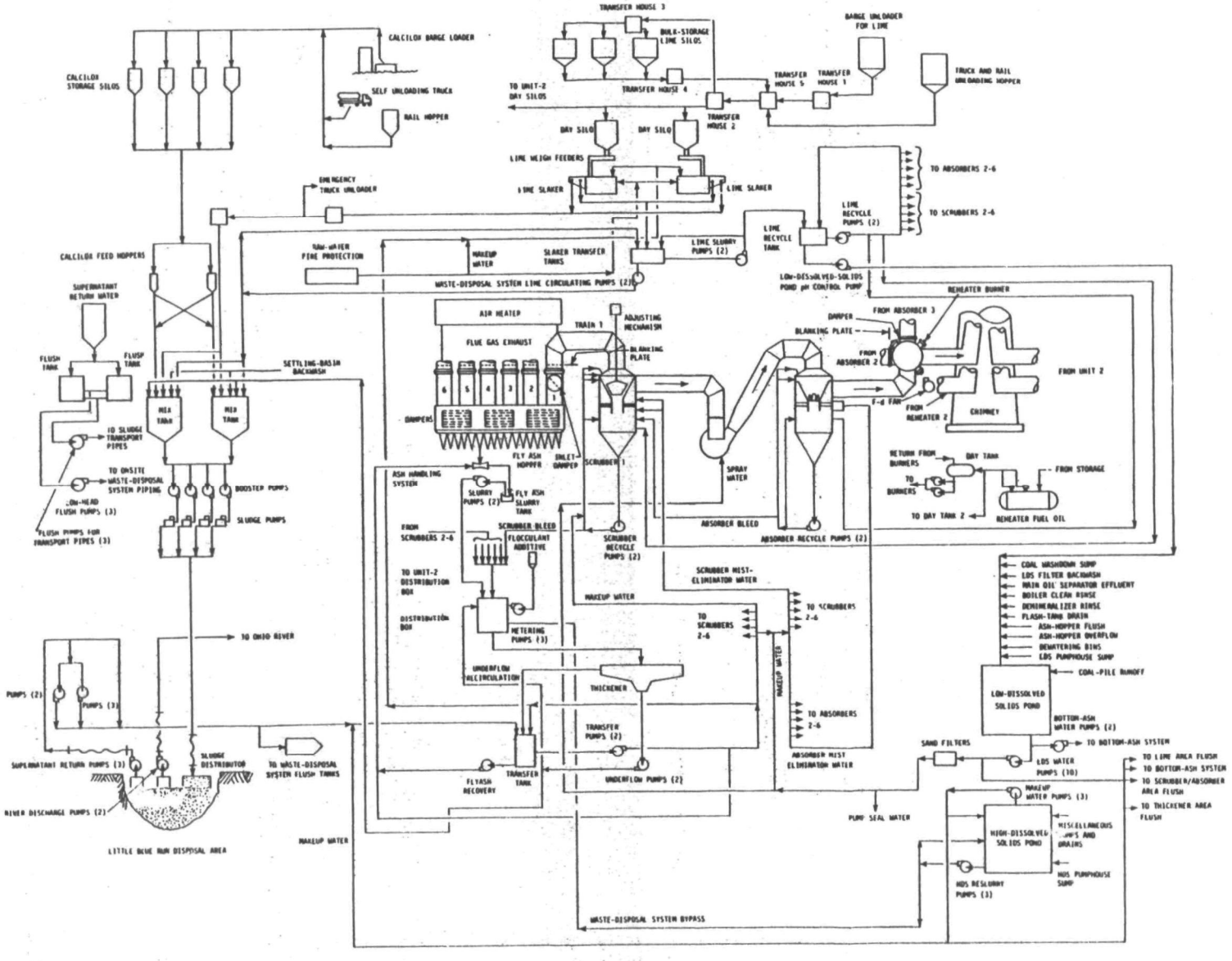

Pennsylvania Power, Bruce Mansfield FGD System:
Process Flow Diagram for Unit 1 or 2

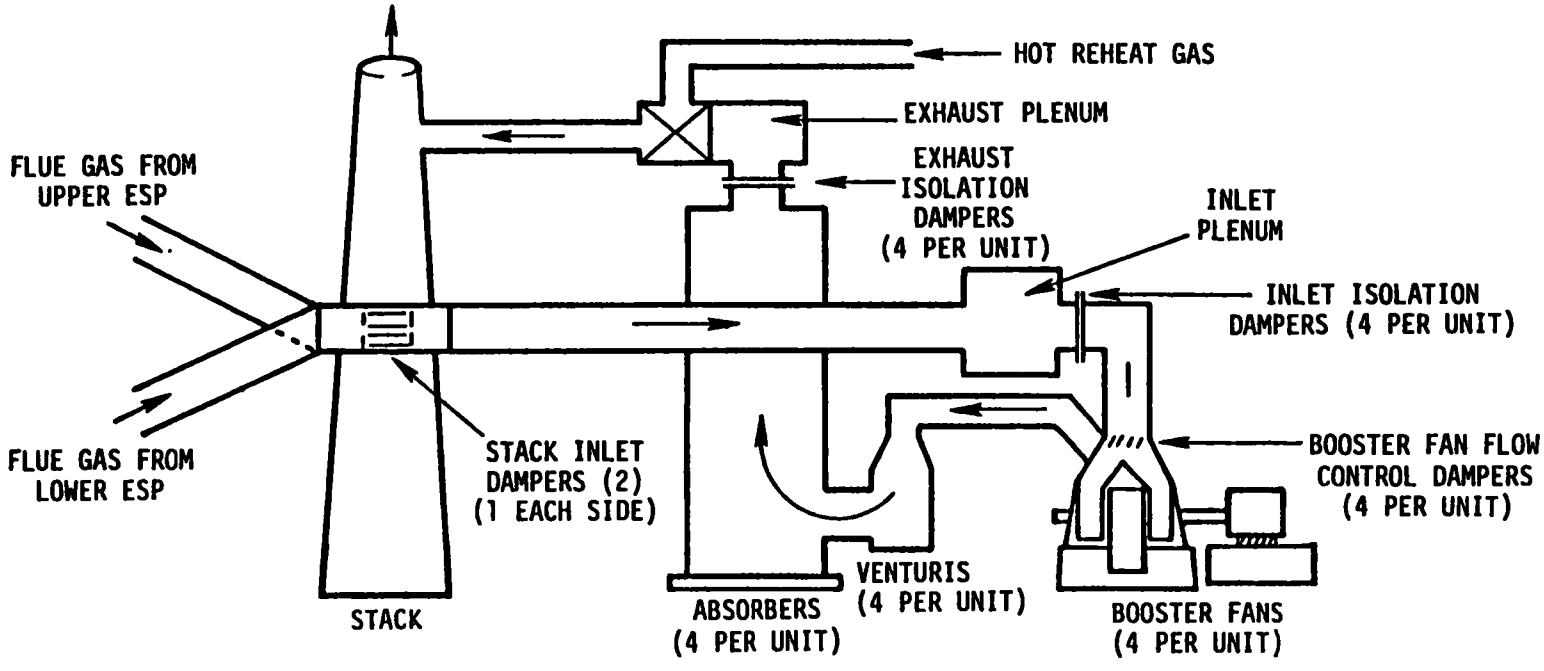

Public Service of New Mexico, San Juan 1, 2, and 3*
FGD System Flue Gas Flow Path

*San Juan 3 is identical except that only one scrubbing train is operational.

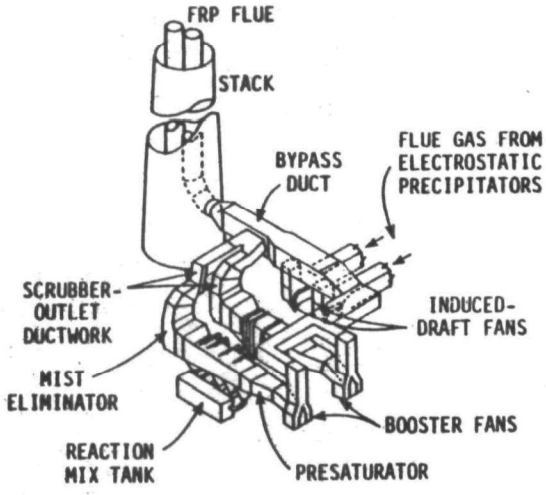

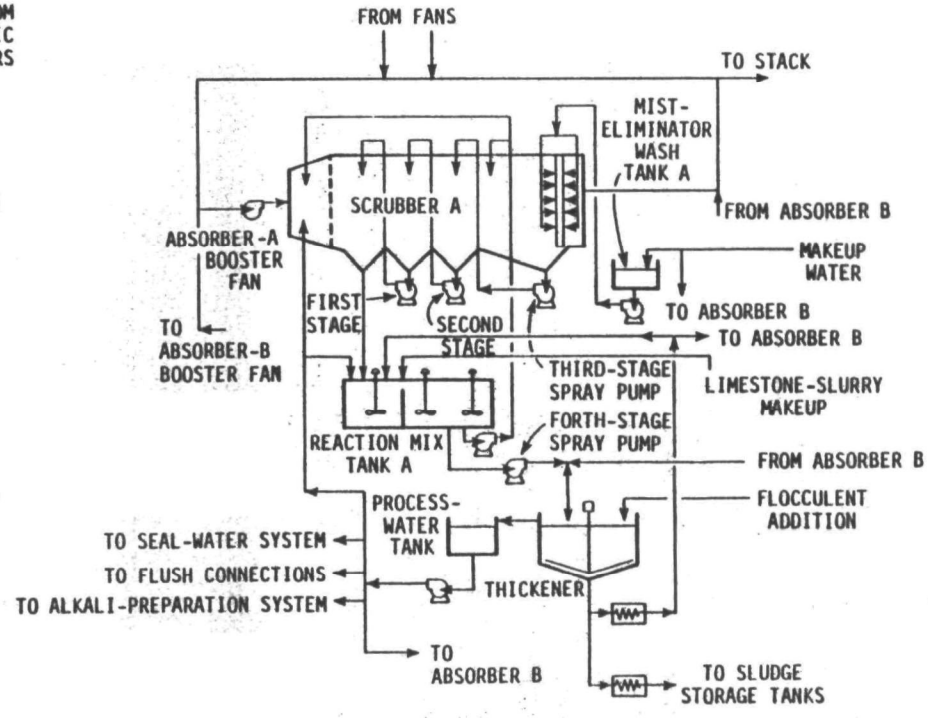

Salt River Project, Coronado 1 and 2 FGD System:
Simplified Process Flow Diagram

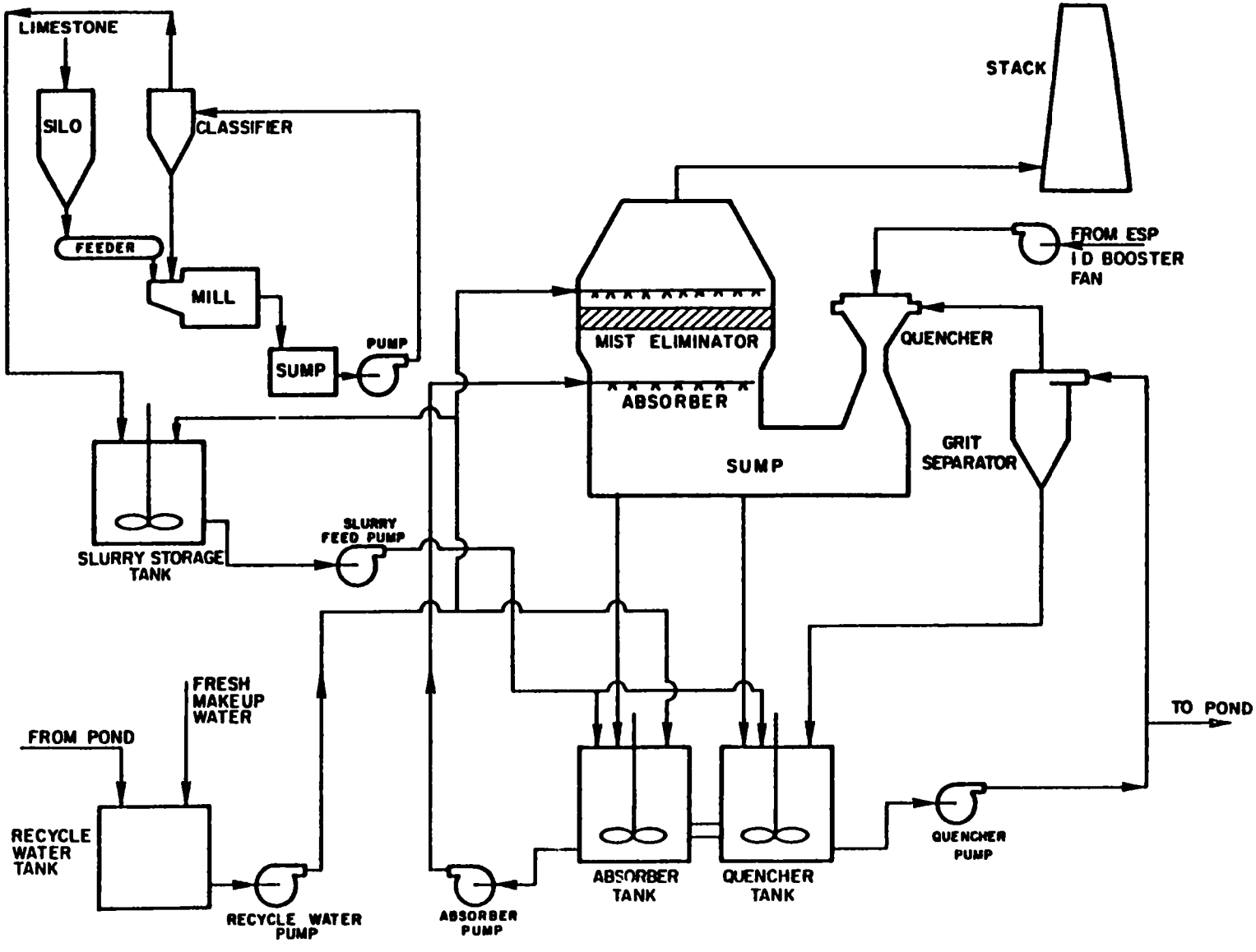

South Carolina Public Service Authority, Winyah 2: Simplified Process Flow Diagram

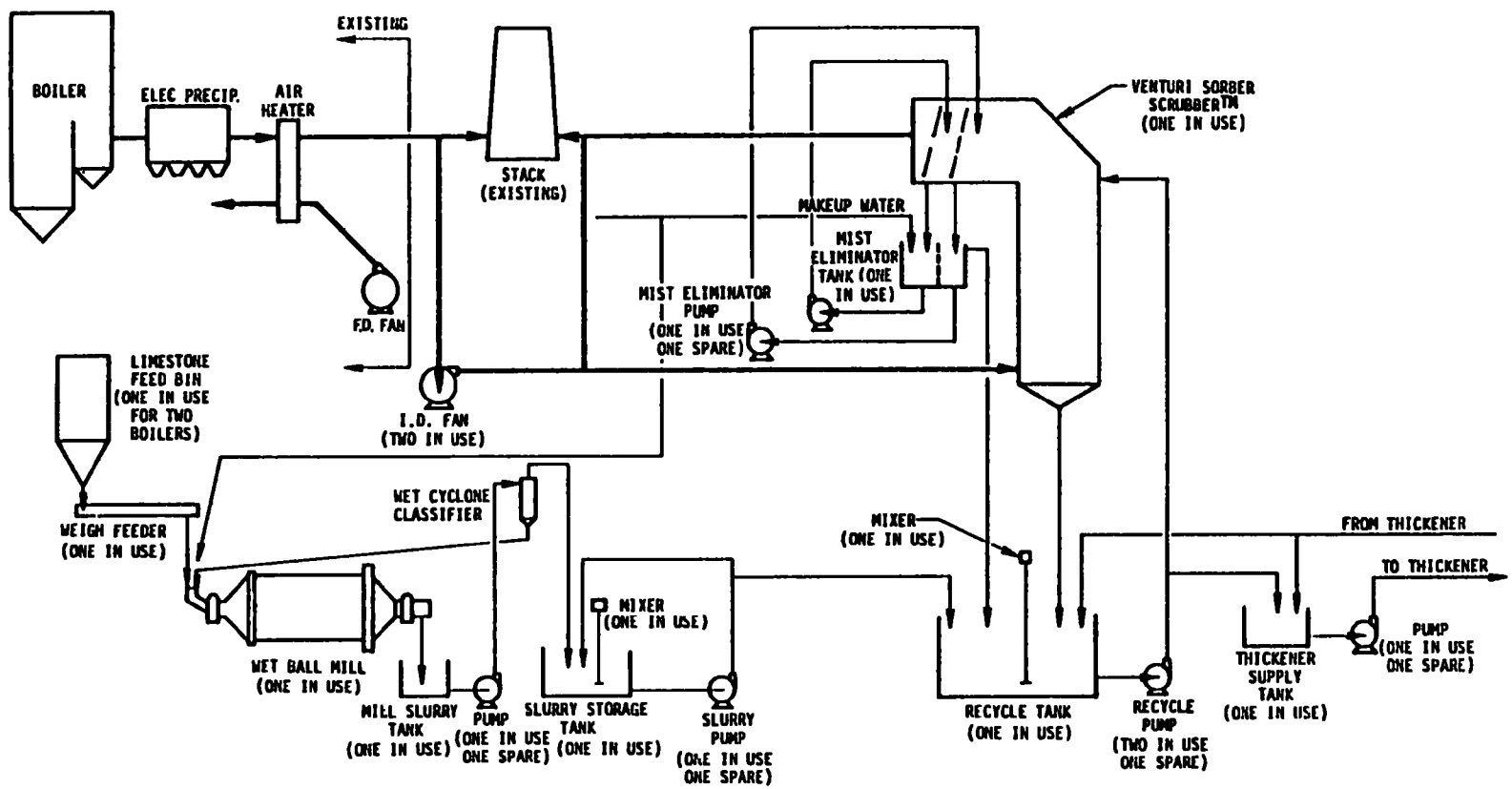

South Mississippi Electric, R.D. Morrow 1 and 2:
Simplified Process Flow Diagram

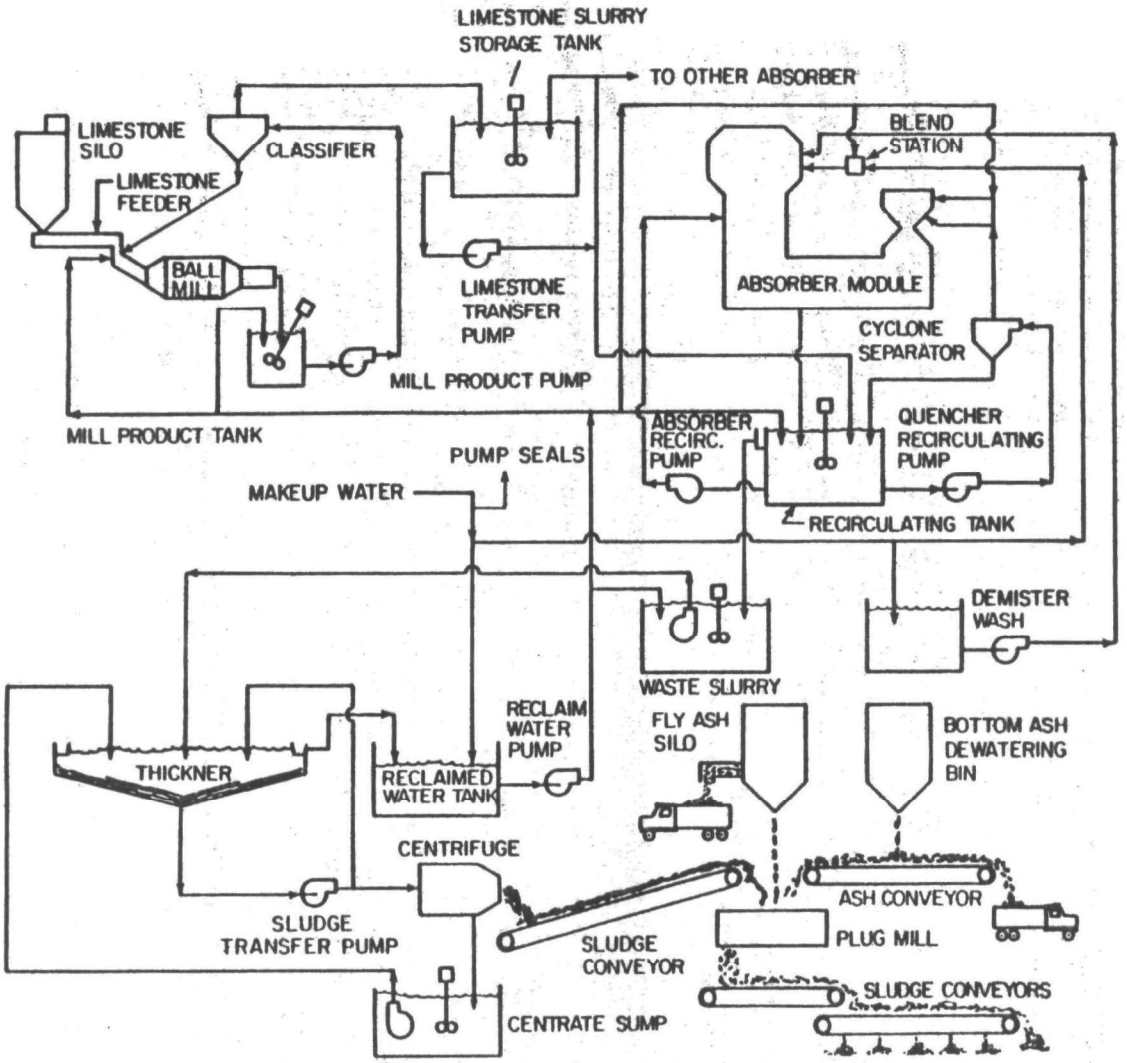

Southern Illinois Power Coop, Marion 4: Simplified Process Flow Diagram

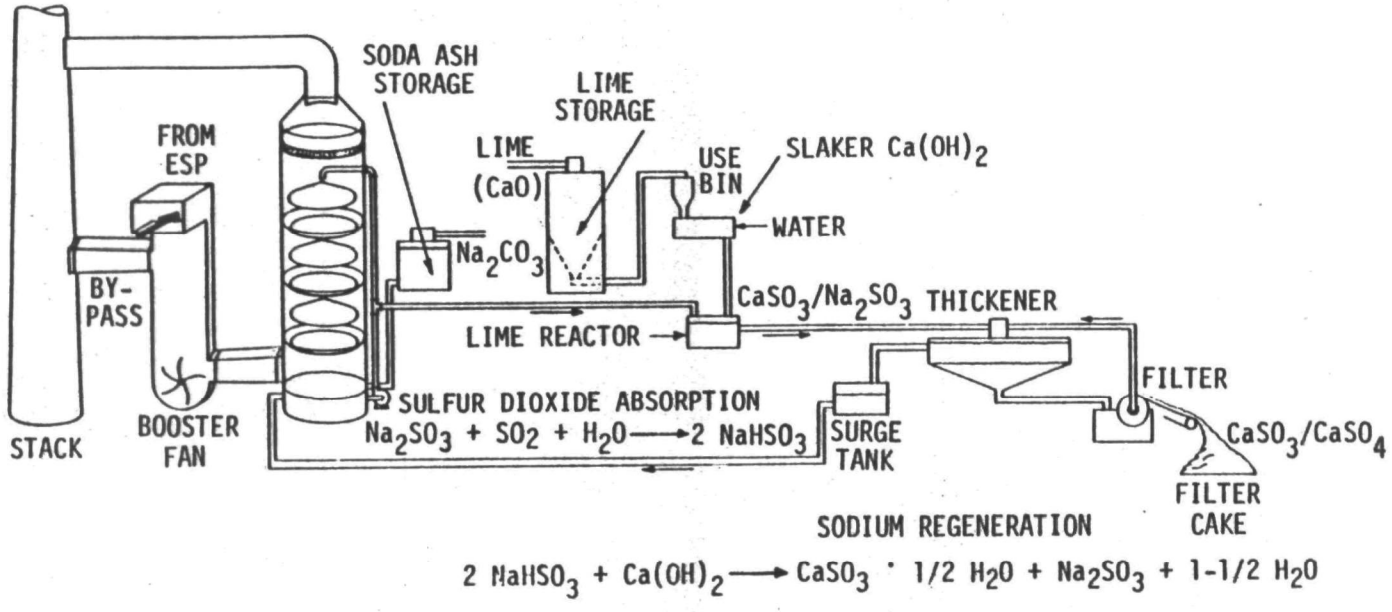

Southern Indiana Gas and Electric, A.B. Brown 1:
Dual Alkali FGD System Simplified Process Flow Diagram

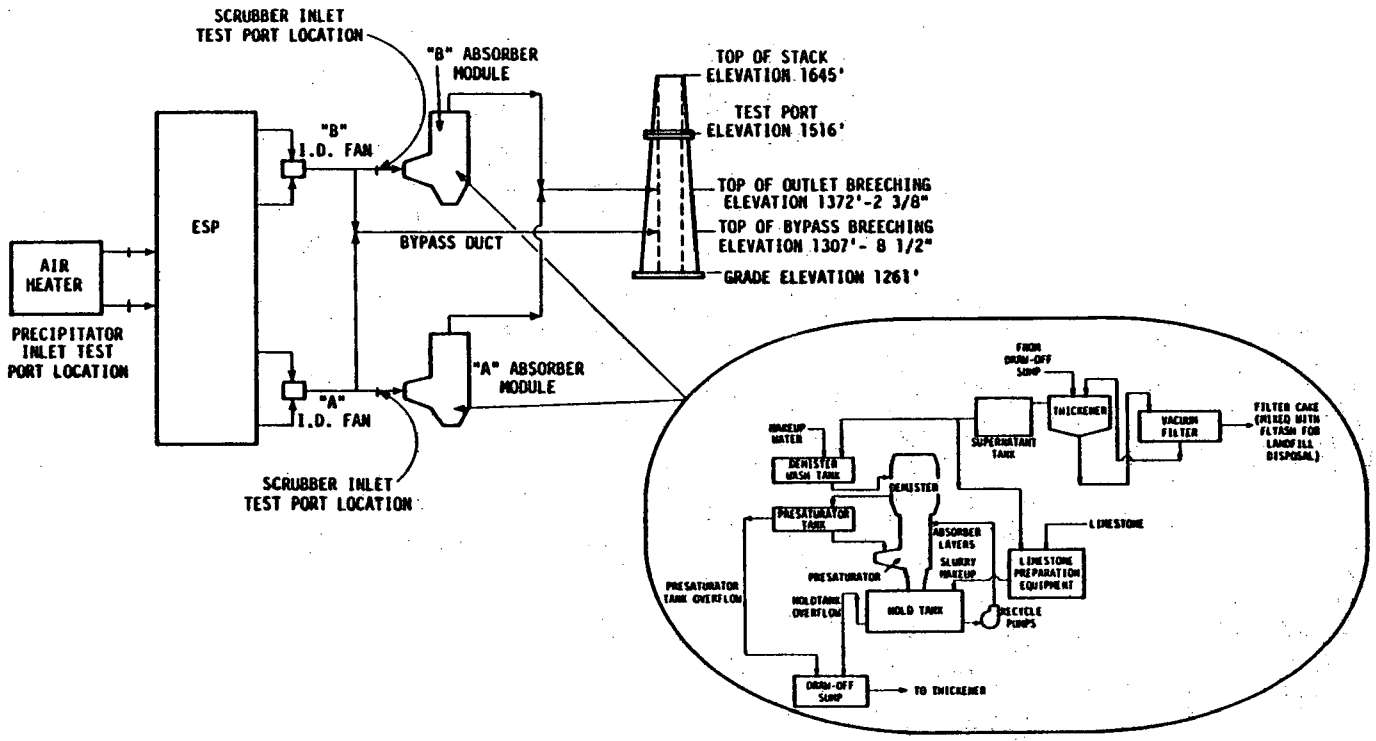

Springfield City Utilities, Southwest 1:
Simplified Process Diagram

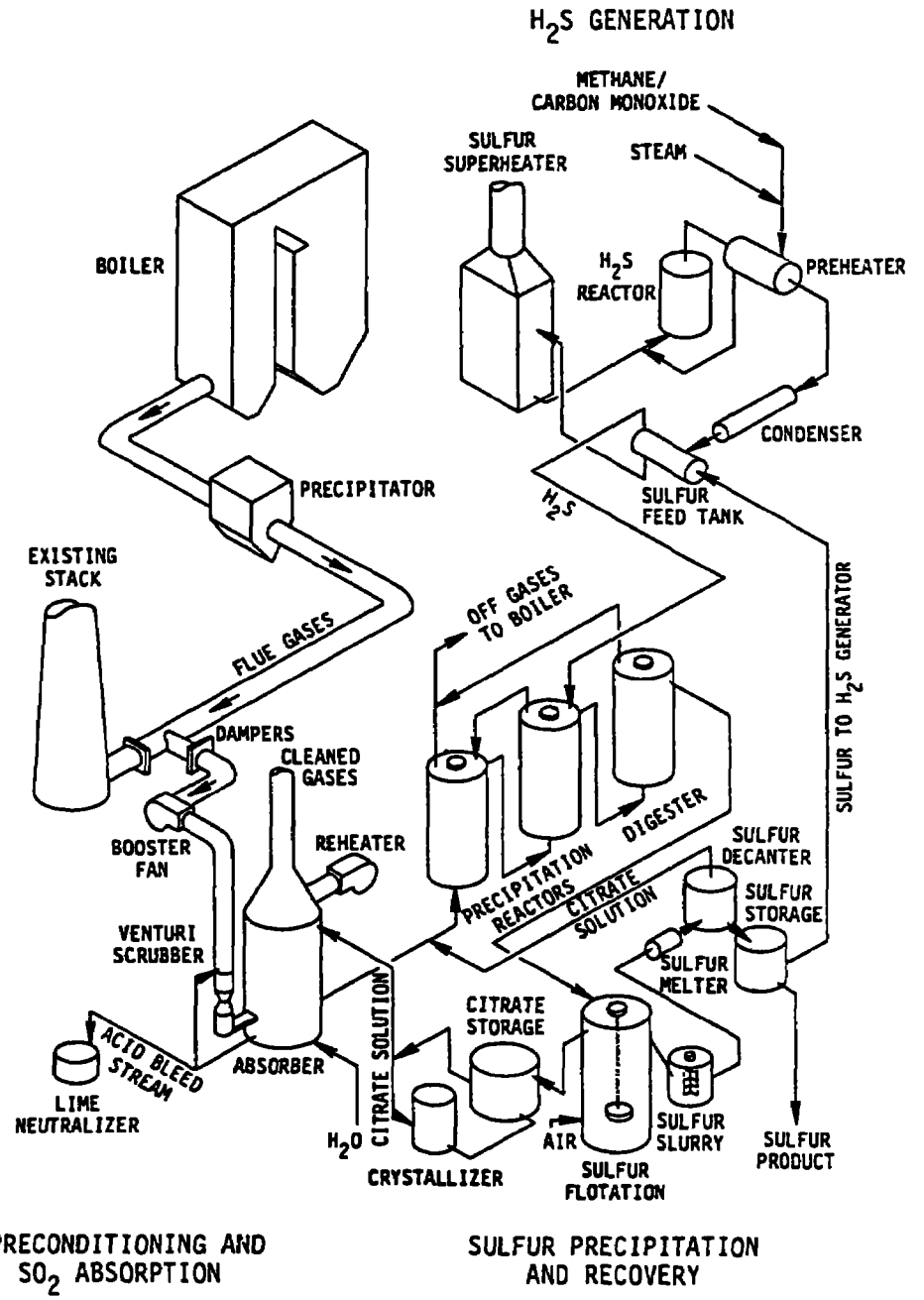

St. Joe Zinc, G.F. Weaton 1:
Citrate FGD System Simplified Process Flow Diagram

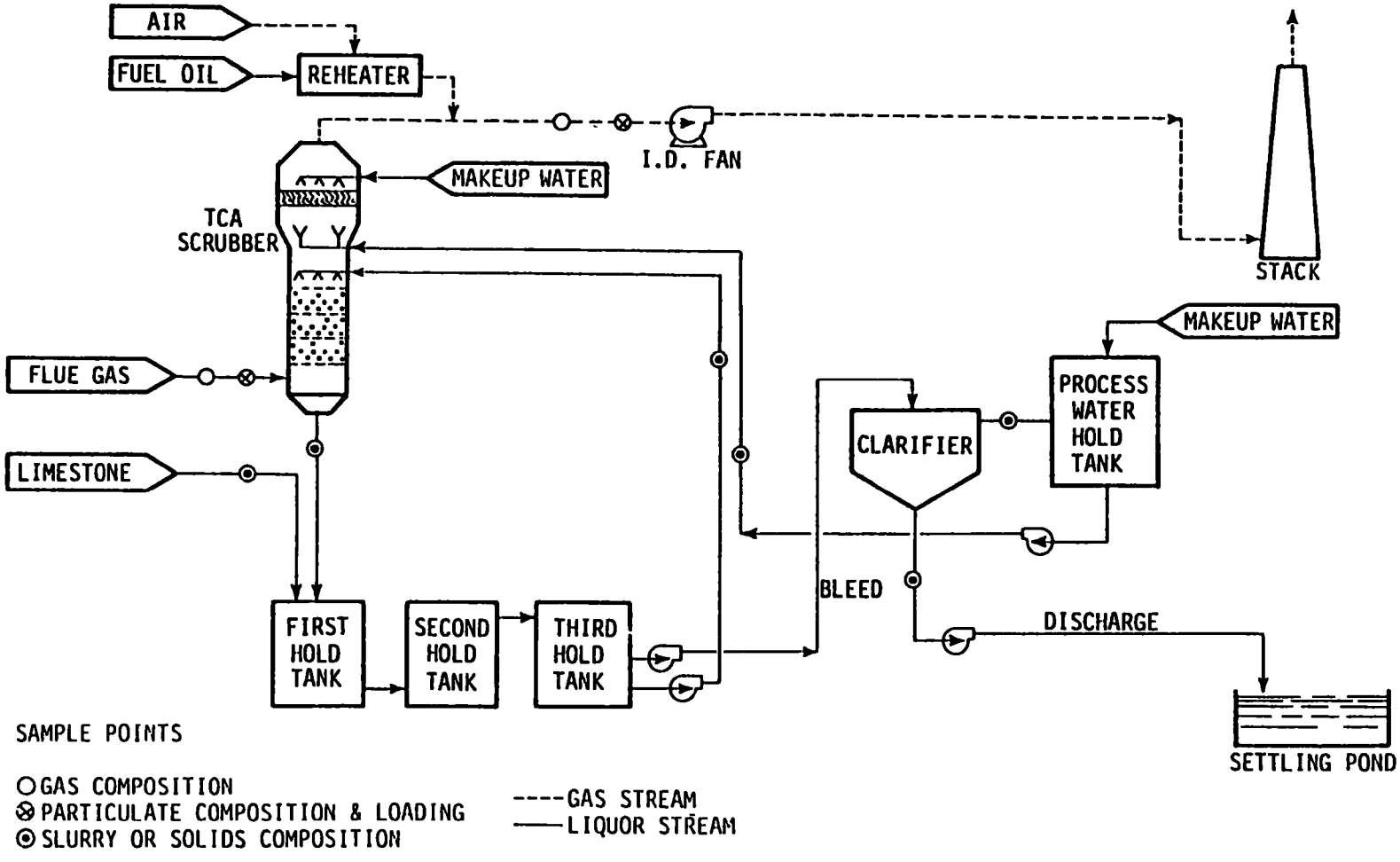

Tennessee Valley Authority,
Shawnee 10A Prototype Test Unit:
General Process Diagram.

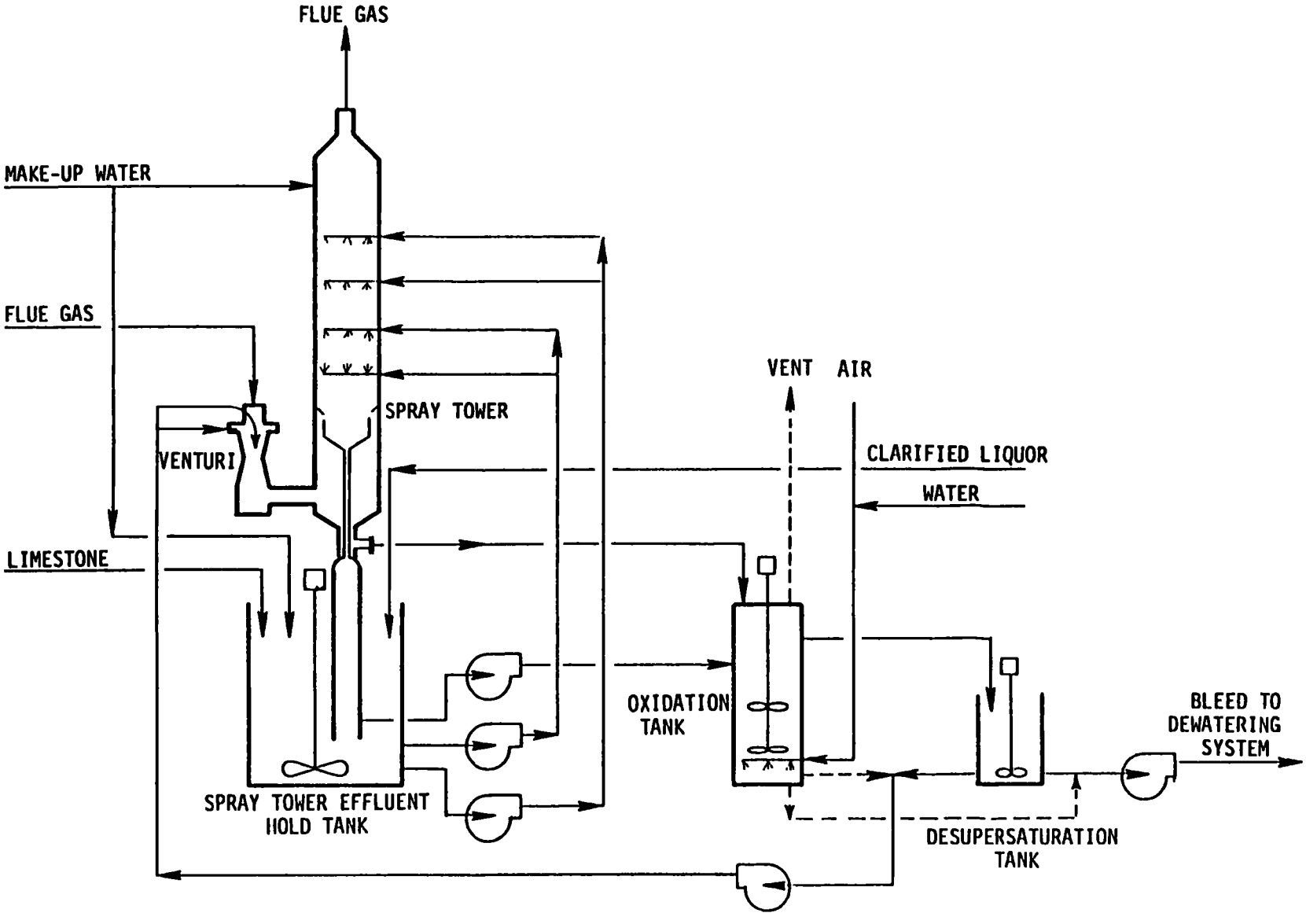

Tennessee Valley Authority, Shawnee 10B Prototype Test Unit:
Modified Venturi/Spray Tower System for 2-Stage Oxidation Testing.

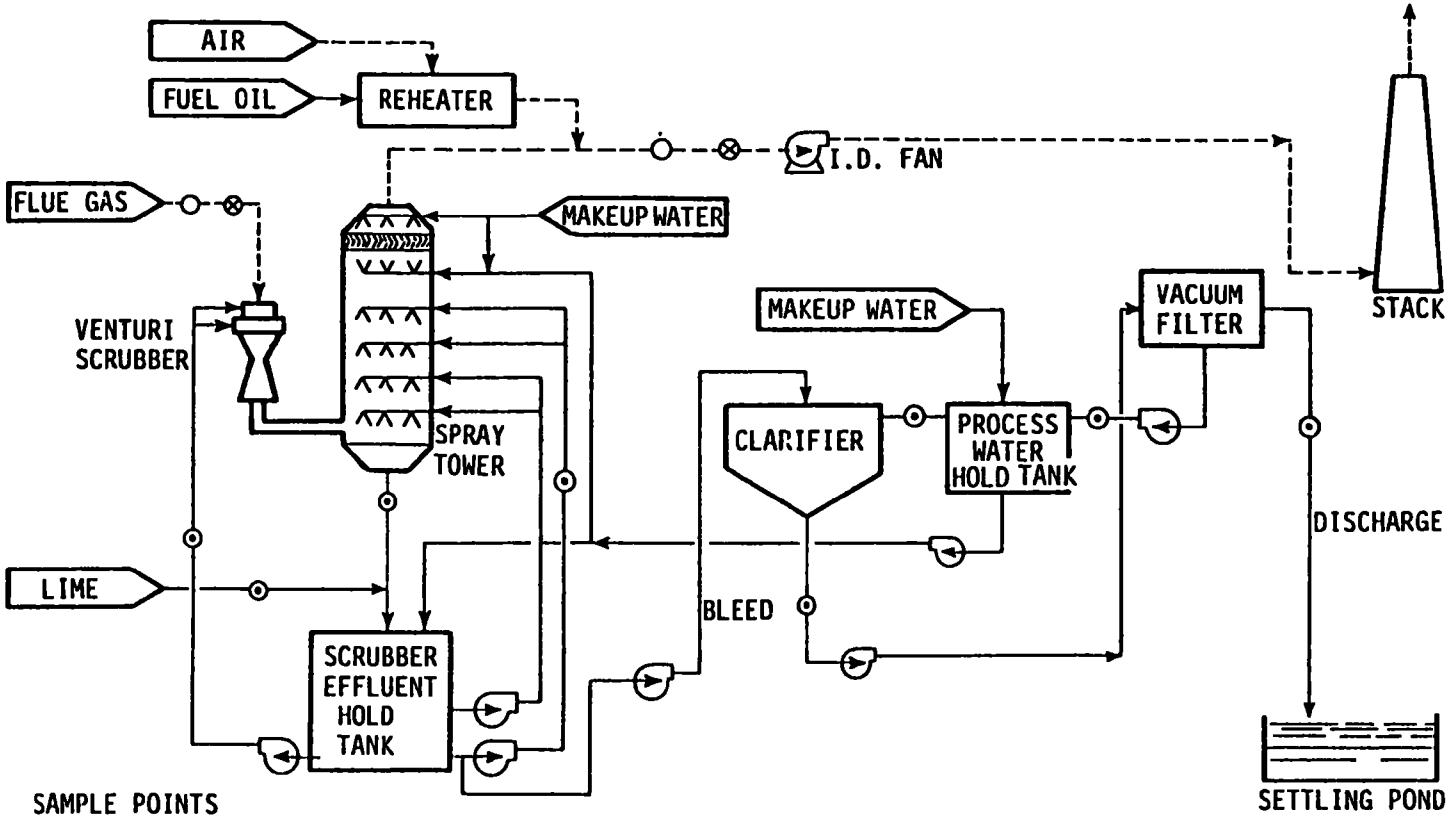

SAMPLE POINTS

○ GAS COMPOSITION
⊗ PARTICULATE COMPOSITION & LOADING
⊙ SLURRY OR SOLIDS COMPOSITION

----GAS STREAM
——LIQUOR STREAM

Tennessee Valley Authority, Shawnee 10B Prototype Unit:
General Process Diagram.

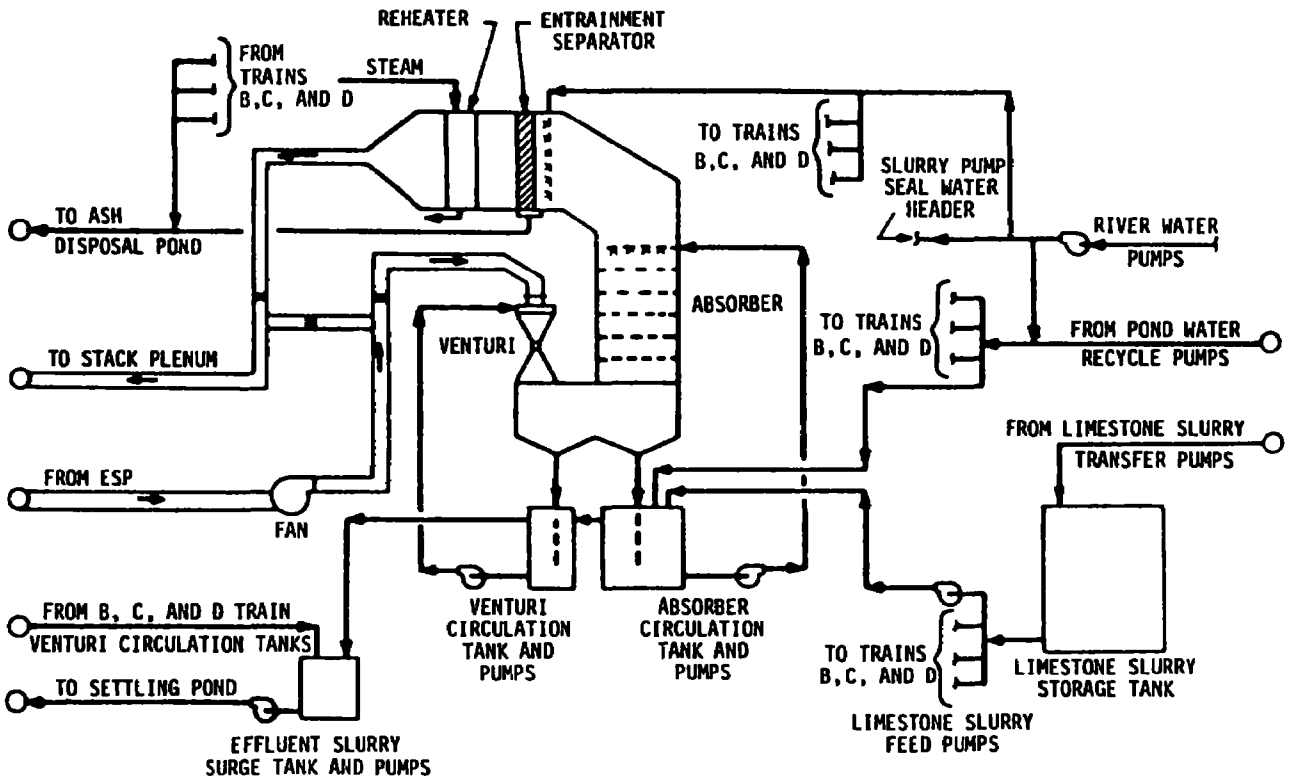

Tennessee Valley Authority, Widows Creek 8 FGD System:
Process Flow Diagram for One of the Four Scrubber Trains

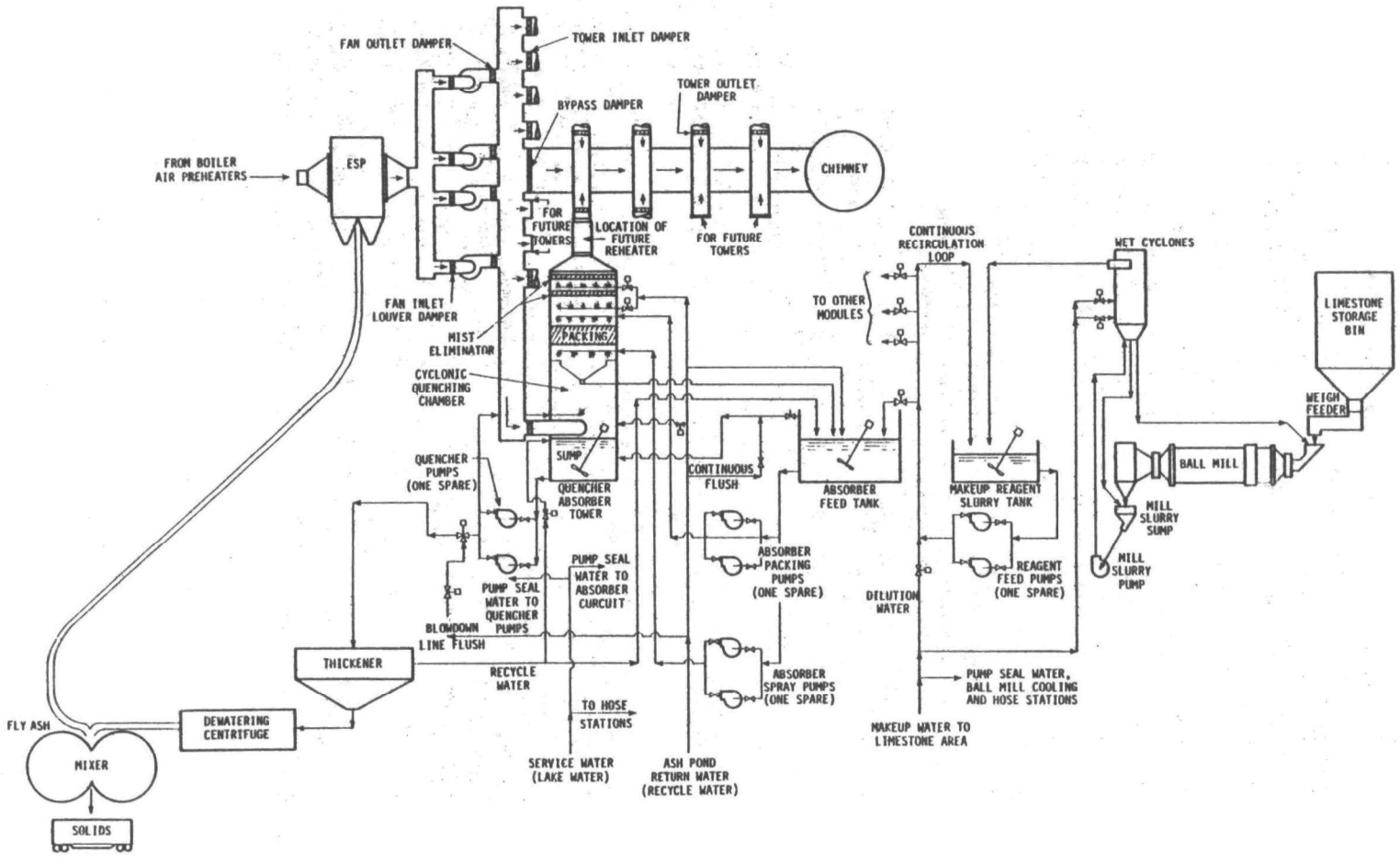

Texas Utilities,
Simplified Process Flow Diagram for One of the Three Identical
Martin Lake FGD Systems

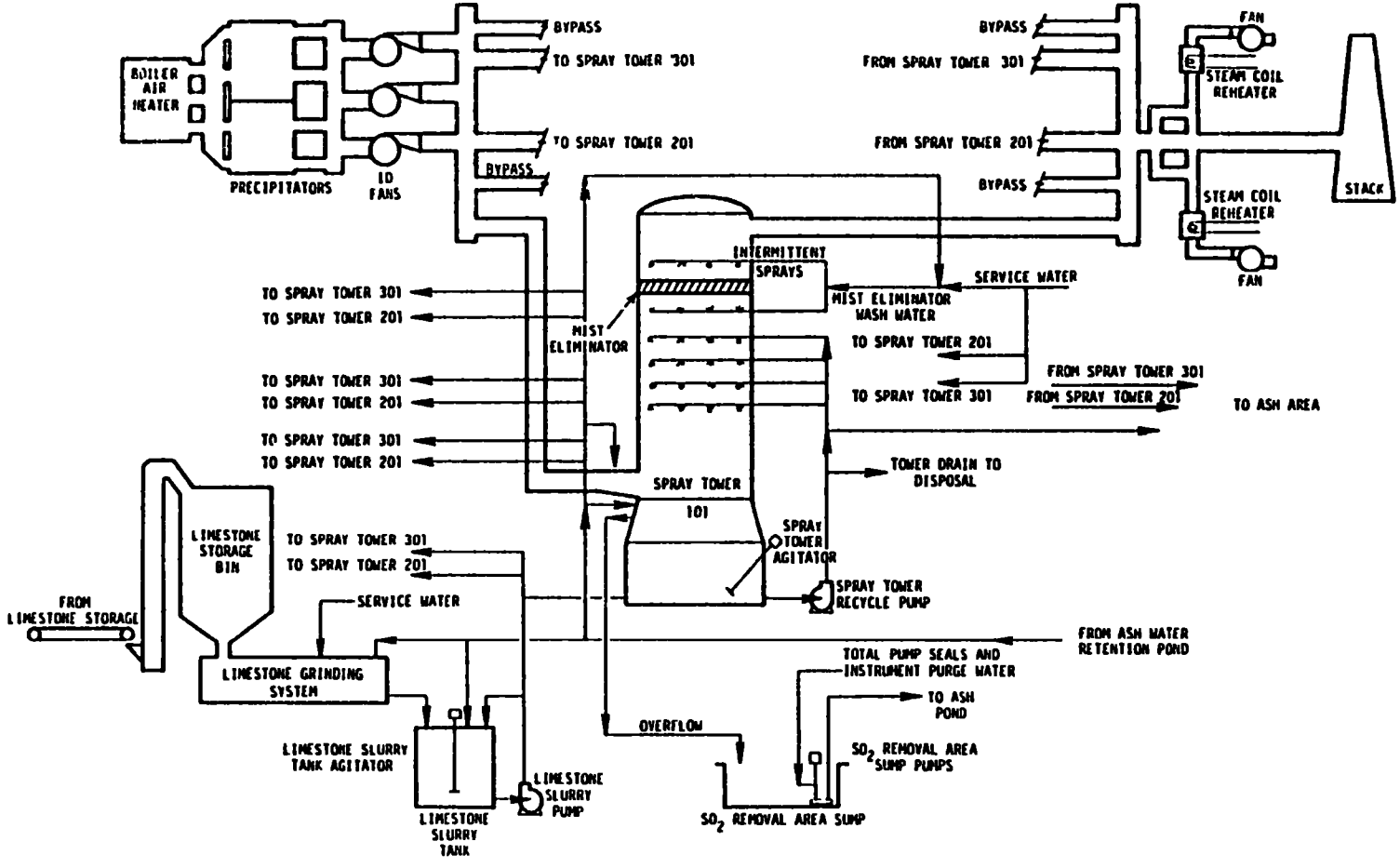

Texas Utilities,
Simplified Process Flow Diagram for Monticello 3

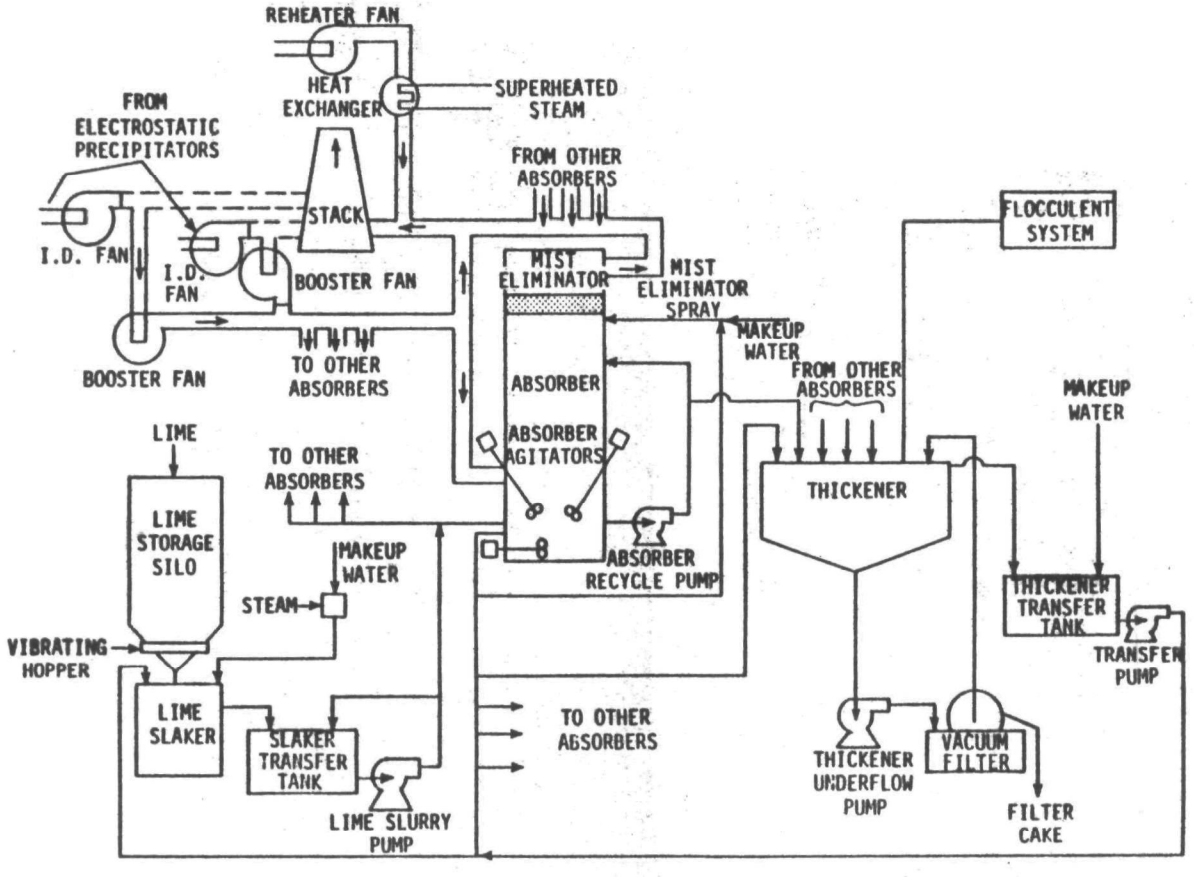

Utah Power & Light, FGD System Simplified Process Flow Diagram for Hunter 1, 2 or Huntington 1