CWT 10-1

EVALUATION OF MACERATOR-CHLORINATORS ON U. S. COAST GUARD VESSELS

U.S. DEPARTMENT OF THE INTERIOR
FEDERAL WATER POLLUTION CONTROL ADMINISTRATION
NORTHEAST REGION
NORTH ATLANTIC WATER QUALITY MANAGEMENT CENTER
Edison, New Jersey 08817
June 1968

EVALUATION OF

MACERATOR-CHLORINATORS

ON U.S. COAST GUARD VESSELS

U.S. Department of the Interior
Federal Water Pollution Control Administration
Northeast Region
North Atlantic Water Quality Management Center
Edison, N. J.

June 1968

CONTENTS

	Page No.
Introduction - - - - - - - - - - - - - - - - - -	1
Summary - - - - - - - - - - - - - - - - - - -	2
Conclusions - - - - - - - - - - - - - - - - - - -	4
Recommendations- - - - - - - - - - - - - - - - - -	6
Discussion of Intensive Study- - - - - - - - - -	8
Discussion of Surveillance Study - - - - - - - -	15

APPENDICES

Appendix I - Sampling Procedures - - - - - - - -	17
Appendix II - Field Test Data - - - - - - - -	18

ILLUSTRATIONS

Figure I - Macerator Cross-section - - - - - - -	11
Figure II - Gasket Modification - - - - - - -	13

INTRODUCTION

Acting under Executive Order 11288*, Section 8, issued July 2, 1966, the North Atlantic Water Quality Management Center undertook an investigation to evaluate the operation of the Carlson, C-Chlor, Mark 10, macerator-chlorinator unit installed aboard U. S. Coast Guard vessels in the New York area. The treatment facilities were installed by the Coast Guard in accordance with a schedule agreed upon by FWPCA. The investigating program, which was dependent upon vessel availability, was designed to:

(a) test the units under actual operating conditions, specially during maximum use periods when detention time in the macerator would be at a minimum;

(b) determine the mechanical reliability of the treatment device; and

(c) ascertain the degree of treatment provided and the effectiveness of the system in reducing pollution.

The evaluation program included an intensive study aboard buoy tenders and a surveillance or spot check program on the Coast Guard's sea-going tugboats and light-ships.

*Superseded Executive Order 11258, November 17, 1965

SUMMARY

1. The investigative program, initially conducted aboard the ARBUTUS, was seriously restricted because of installation problems and treatment unit malfunctions —— short circuiting of fecal particles through the macerator, and an inoperable check valve in the hypochlorite line.

Of the 34 effluent samples analyzed, 63% had a total coliform density of greater than 1,000/100 ml. Operating cost during this period, is based on daily disinfectant usage (15% sodium hypochlorite) of approximately 20 gallons was $10.00 per day.

2. The treatment unit evaluated aboard the FIREBUSH incorporated manufacturer's design modifications —— gaskets on the inside face of the macerator support core; replacement of the bottom blade on the macerator shaft with a solid disc —— which were made as a result of the initial survey aboard the ARBUTUS.

Seventeen percent of the 227 effluent samples analyzed from the treatment unit had a total coliform density of greater than 1,000/100 ml. Deficiencies in the operation of the unit —— large (6 - 12-mm in diameter) particles in the effluent due to short circuiting —— were still prevalent during this testing program.

Clogging of the macerator, resulting from the crew flushing such items as large gauze bandages and pieces of cloth, often caused the unit to malfunction, thus necessitating removal and cleaning of the treatment unit. Disinfectant costs during this program again averaged

$10.00 daily.

3. The macerator-chlorinator units installed aboard the tugboats and light-ships were similar to the unit originally installed on the ARBUTUS, i.e., they did not incorporate any of the manufacturer's design modifications.

A surveillance study of the macerator-chlorinators aboard the TUCKAHOE and NAVESINK indicated a satisfactory effluent coliform density of less than 1,000/100 ml in the eight samples examined. Mechanically, the units aboard both vessels had a downtime of approximately 50% because of inoperable check valves in the hypochlorite lines.

A sampling program aboard another tug —— MANITOU —— was never initiated because the treatment unit had a downtime of greater than 90% due to a faulty and inoperable check valve in the hypochlorite line. Chlorine procurement problems prevented testing the unit aboard the light-ship BARNEGAT #532.

CONCLUSIONS

1. The macerator-chlorinator evaluated requires further developmental work by the manufacturer; specifically, in the reduction of particle size where large solids tend to contribute to high coliform densities because of the organic masking effect.

2. During maximum use periods, the macerator-chlorinator units evaluated did not continuously produce an effluent with a coliform density of 1,000/100 ml or less.*

3. Aboard the ARBUTUS and FIREBUSH, where toilet facilities were used extensively during a 90-minute period, macerator detention periods were often as short as 0 to 2 minutes.

4. Considering the purchase price and the higher level of available chlorine, it is more economical to use 15% for disinfection rather than the 10% solution recommended by the manufacturer.

5. Disinfectant is used at a rate of approximately 20 gallons per day when crew size averages 35 members and 250 ml of 15% available chlorine (sodium hypochlorite) is used per flush. Chlorine costs under these conditions were approximately $10 daily.

*Effluent criteria proposed by the U. S. Public Health Service but not as yet officially adopted. Taken from Senate Document 48, 90th Congress, 1st Session, August 7, 1967; Wastes from Watercraft, Exhibit 2, Item (2).

6. Detention time in the macerator-chlorinator is dependent upon frequency of toilet use and flush water volume.

7. Urine flushes account for approximately 65 to 75% of chlorine usage.

8. The treatment system is not designed to handle heavy paper, cloth, gauze bandages or other refuse. Introduction of these materials into the treatment units during the study caused malfunction. A program to educate Coast Guard personnel on the function of this type treatment system is deemed necessary.

9. The Coast Guard's present system of handling disinfectant in one-gallon plastic bottles is uneconomical and at times unsafe since crew members are required to carry gallon containers from dockside to the lower decks via vertical ladders.

RECOMMENDATIONS

1. Maintenance, to include complete removal of the macerator unit, should be performed once a month. This period could be extended to every three months if previous examinations demonstrated no clogging or breakdown.

2. Fifteen percent sodium hypochlorite should be used for disinfection.

3. Unit should be designed so that effluent particle size is consistently below 2-mm in diameter.

4. A check valve should be developed to insure proper chlorine injection with each flush.

5. Modifications made in an attempt to meet the proposed U.S.P.H.S. coliform standards should not include an increase in the present volume or strength (15%) of hypochlorite.

6. To increase detention time in the macerator unit the volume of flush water, which was preset on all vessels at four gallons, should be reduced to two to three gallons.

7. Other methods of handling chlorine should be investigated by the USCG and the manufacturer. Hypochlorite could be pumped from bulk storage on the dock into a tank aboard the vessel. This procedure would be more economical than present system, which requires excessive handling of the disinfectant.

8. Since urine from a normal healthy individual is free of pathogens and coliforms, it is suggested that in new construction of vessels it be handled and treated separately. This might be accomplished by not connecting urinals with the macerator system but installing a hypochlorinator to handle this type waste.

9. To assure an adequate macerator detention time there is a need for establishing a limit to the number of persons, rather than the number of water closets, per central macerator unit.

10. Evaluation of the performance of macerator-chlorinators should be based on the capability of the system to meet the proposed standards during maximun use periods.

INTENSIVE STUDY PROGRAM

General

This phase of the evaluation program was conducted aboard the ARBUTUS, a 170 foot-long buoy tender manned by a crew of 35 enlisted men and five officers, and the FIREBUSH, a 180 foot-long buoy tender with a crew of 45 —— 40 enlisted men and five officers. The treatment unit aboard the ARBUTUS handled four water closets for the enlisted personnel only. The FIREBUSH'S macerator served five water closets and one urinal for the enlisted personnel. The macerator holding tanks on both vessels had a capacity of 12 gallons. Hypochlorite storage volume for these units was 25 gallons.

Prior to initiating the study in September 1966 "dry runs" were conducted to (1) familiarize the test team with the design and operating features of the system (2) establish the criteria for testing performance under actual operating conditions (3) determine the analytical procedures to be used in analyzing the effluent and (4) determine and correct any problems associated with the installation of the unit which would interfere with the test program.

Observations of actual toilet use aboard the ARBUTUS and FIREBUSH indicated that peak load conditions occurred between the hours of 6:00 a.m. and 7:30 a.m. During this 90 minute period the entire crew, for all practical purposes, took care of their personal needs, including urination and defecation. It is interesting to note that "urine flushes" accounted for approximately 65 to 75% of the toilet usage.

Under these conditions of maximum use detention time in the macerator on both vessels averaged two minutes or less. Therefore, the testing

program was established to evaluate the performance of the units under the most critical conditions —— two minutes detention time in the macerator holding tank.

During the actual conduct of the study aboard both vessels operating problems were encountered with the hypochlorinating system; specifically the check valve in the hypochlorite line would intermittently stick, thus causing the pump to lose its prime. This malfunction affected treatment efficiency since the volume of chlorine delivered per flush was not constant. Other operating problems were encountered during the program; however, they were mainly due to installation errors and not to the equipment supplied.

Operation of the macerator chlorinator aboard both of the buoy tenders was under the direct control of the test team. Ship personnel were notified by adequate precautionary signs in the toilet areas that no flushing was to be done by the crew. The only exception to this warning was if the crew member found a stool specimen in the bowl, he could flush the specimen provided he was ready to replace it. In all other circumstances one of the team members was assigned the job of flushing. In this way, control of contact time between the chlorine and stool specimen could be maintained.

ARBUTUS

Examination of data collected during the ARBUTUS study indicated that 63% of the effluent samples had a coliform density of greater than 1,000/100 ml. These high bacteria counts were attributed, in part, to (a) insufficient disinfectant dosages, (b) inadequate macerator detention

time and (c) large solids (6 to 12-mm in diameter) in the effluent.

To overcome the problem of insufficient disinfectant dosages it was recommended that all future studies be conducted using 15% sodium hypochlorite rather than the 10% solution recommended by the manufacturer. Also, the injection rate was increased from the manufacturers recommended level of 225 ml to 250 ml so as to provide greater disinfection capacity.

Detention time in the macerator holding tank could have been significantly increased if the flush water volume was decreased from four to two gallons. However, because the flushometers were factory set at four gallons this modification could not be accomplished.

Consultations with the manufacturer in connection with the possibility of short circuiting occurring within the macerator unit, which permitted the passing of large solids through the system into the effluent, resulted in the following design modifications:

a) Replacement of the lower macerator blade with a solid disc, which has a clearance of 1/16 inch (1.6 mm) between its outer edge and the wall of the macerator chamber. (See Figure I) The function of this modification was to reduce particle size by forcing the fecal material through the small clearance. In so doing, bacteria enmeshed in the particle would be released into the chlorinated medium for disinfection.

b) Installation of gaskets around the inner face of the internal PVC macerator support core, above and below the point where raw sewage

FIGURE I-MACERATOR CROSS SECTION

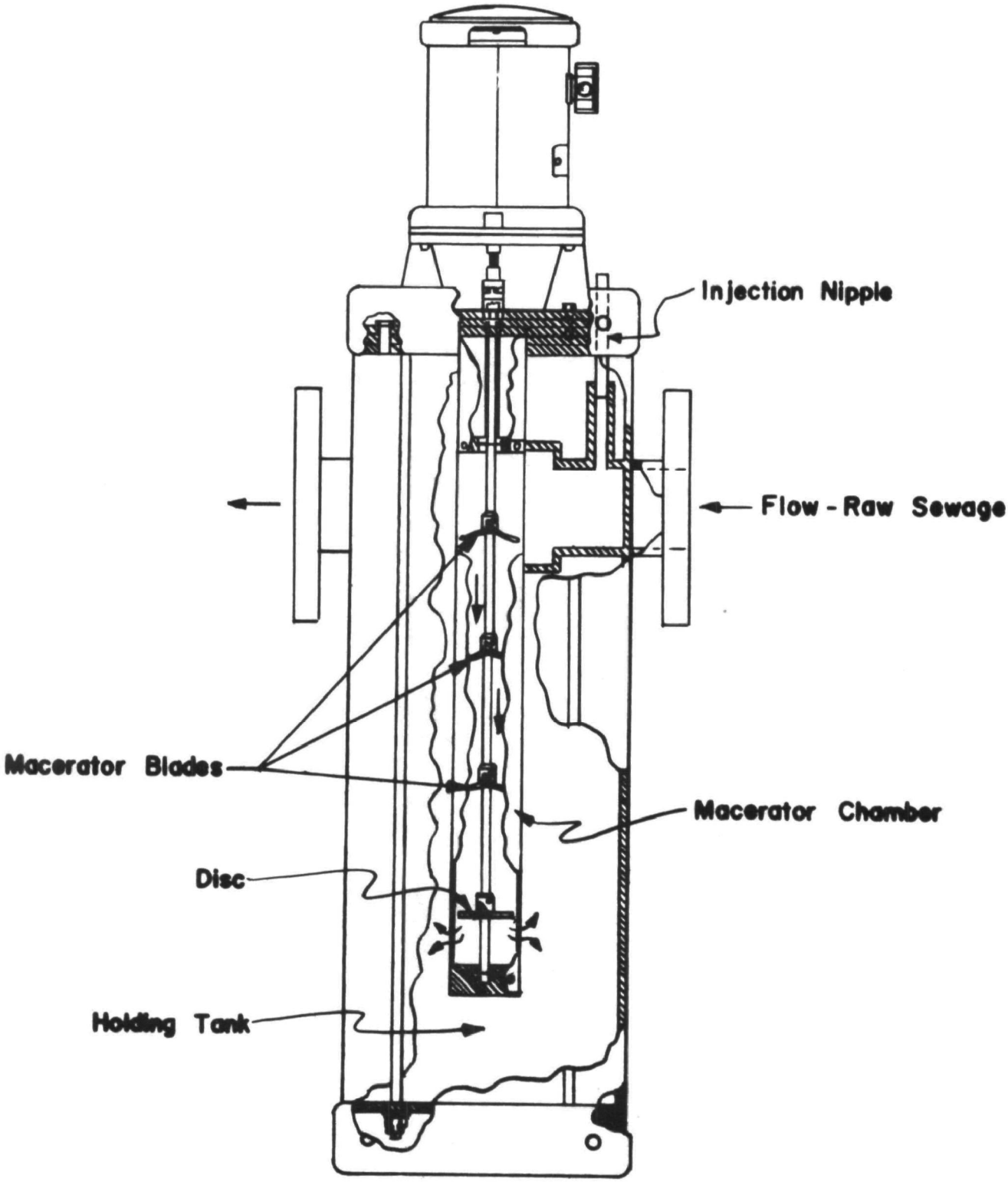

enters the macerator chamber. (See Figure II) The purpose of the gaskets —— started with two, presently using eight —— was to prevent short circuiting of raw sewage through the space required for clearance between the macerator and internal support core.

FIREBUSH

The ARBUTUS was scheduled to be decommissioned, and therefore, the modified macerator-chlorinator was installed aboard the FIREBUSH in October 1966. The recommendation of using 250 ml of 15% sodium hypochlorite was implemented during this program. As in the case of the ARBUTUS, the flushometers were factory set for four gallons per flush and could not be adjusted.

During the two month evaluation program 227 samples of the effluent were collected and assayed for total and fecal coliform. Data showed that 83% of the samples had a total coliform density of less than 1,000/100 ml and that 78% had a fecal coliform density of less than 200/100 ml. Large particles were again observed in several of the effluent samples that had high bacteria counts. There was also strong evidence that some of the samples which failed to meet the proposed bacteriological standard did so because of the intermittent failure of the check valve in the hypochlorite line.

Based upon preliminary evaluation of the data collected it was concluded that the program would not be reinstated until (1) further design modifications were made by the manufacturer to prevent short circuiting and (2) the flush volume was reduced from the present rate of four gallons to approximately two gallons. As of March, 1968

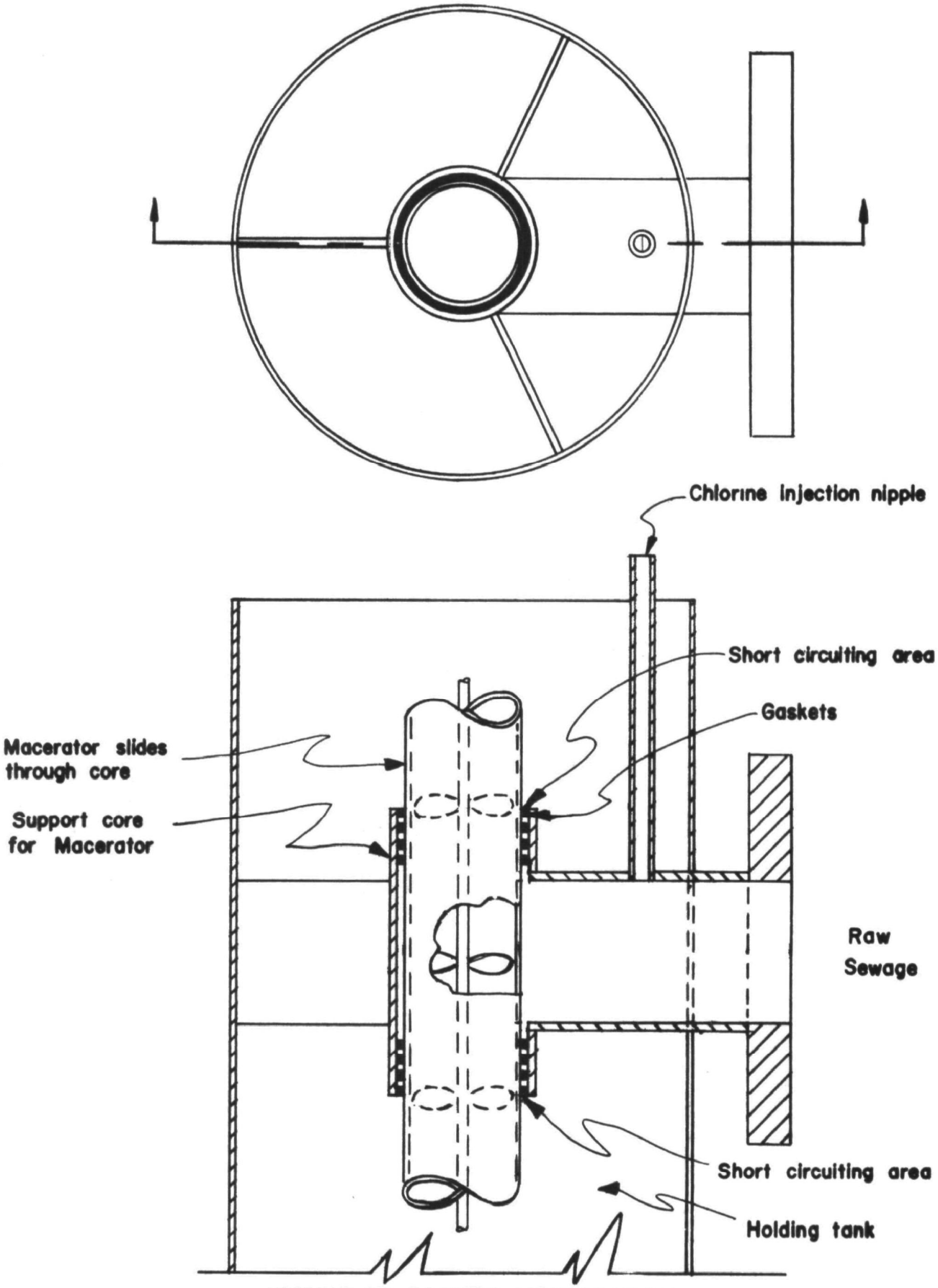

FIGURE II- GASKET MODIFICATION

these recommendations have not been met, and therefore, the study program aboard this vessel has not been re-established.

SURVEILLANCE PROGRAM

During the period when testing was being conducted on the ARBUTUS and FIREBUSH the Coast Guard, as per a previously agreed to schedule with FWPCA, installed macerator-chlorinator units aboard the ocean-going tugboats MANITOU, NAVESINK and TUCKAHOE, and the light-ship BARNEGAT #532. The units installed in all of these vessels were of the same size and capacity as those installed on the two large buoy tenders —— ARBUTUS and FIREBUSH. The treatment units aboard the tugboats handled two water closets with a tributary population of 20 men. The system aboard the light-ship handled two toilets and the waste of 25 men. In all cases, flush water volume was four gallons per flush.

In an attempt to establish a program aimed at assuring proper operation of the treatment units and to determine conformance of the effluent with the suggested bacteriological standard, a surveillance program was established in April 1967. Unlike the intensive survey, where flushing was under the direct control of the test personnel, this phase of the program was based on actual use of the toilet facilities while the vessel was at dockside.

Because of operating problems —— faulty check valves in the hypochlorite lines and vessel availability —— only two one-day sampling programs could be carried out between April and December 1967. A summary of the surveillance program follows:

BARNEGAT - On two different occasions the unit was found to be inoperable because of "chlorine procurement" problems.

MANITOU - Since installation of the macerator this vessel has been plagued with a faulty check valve in the hypochlorite line. Because of this malfunction, macerator downtime exceeded 50%; therefore, no sampling could be accomplished.

TUCKAHOE - Intermittent check valve problems. Five effluent samples collected on June 28, 1967 had both a total and fecal coliform density of less than 60/100 ml. Retention time in the macerator during this survey varied between 10 and 40 minutes. Large particles (greater than 2-mm in diameter) were noticed in the five effluent samples collected.

NAVESINK - All three of the effluent samples examined on November 27, 1967 had a total and fecal coliform density of less than 10/100 ml. Detention time in the macerator varied from 15 to 90 minutes. As during the testing aboard the TUCKAHOE, large particles (greater than 2-mm in diameter) were present in the effluent.

Since the macerator units installed aboard both the TUCKAHOE and NAVESINK did not include any of the new design modifications, the appearance of large solids in the effluent was not unexpected. The presence of low bacteria counts in conjunction with the solids, however, was unusual. This condition was most likely attributable to long detention periods in the holding tank which permitted the disinfectant to attack the bacteria entrapped and enmeshed within the fecal particles.

A P P E N D I X I

SAMPLING PROCEDURES

SAMPLING PROCEDURES

The effluent lines from all treatment systems were provided with a valved "T" to permit collection of representative samples. Prior to activating the macerator unit, the effluent pipe at the "T" joint was emptied of its contents. Upon activation of the macerator the valve at the "T" was opened and the contents collected during the initial 30 seconds. This volume, approximating one gallon, was discarded. A second gallon was immediately collected, while the macerator was still running, into a sterile one-gallon glass stoppered bottle. Samples from the sterile bottle were distributed into two containers, one for bacteriological analysis —— total and fecal coliform; and the other for chemical analyses —— chlorine residual, pH, and settleable solids. Bacteriological samples were dechlorinated immediately, plated and incubated within one-half hour after the collection of the sample. All chemical tests were also performed on-site immediately after the sample was taken.

All bacteriological and chemical tests were performed in accordance with "Standard Methods For The Examination of Water and Wastewater", 12th Edition. The membrane filter procedure was used for all bacteriological analyses. Available chlorine content of the sodium hypochlorite and chlorine residuals were determined by the Iodiometric Method.

A P P E N D I X II

FIELD TEST DATA

FIELD TEST RESULTS

Vessel: Arbutus
Study Period: September 13-14, 1966
Chlorine: 7% Available Chlorine (Sodium Hypochlorite)

Date	Sample No.	Hldg.Time Mac. Tank (min.)	pH	Settleable Solids (ml/l)*	Available Chlorine (mg/l)	Cl_2Inj. (ml)	Cl_2Residual (mg/l)	MF Total Coli. /100 ml/	MF Fecal Coli. /100 ml
9/13/66	Flush Water (Hart Island)	-	-	-	-	-	-	380	200
	1 (Eff.)	2	7.0	-	42,720	220	142	75,000	44,000
	2 (Eff.)	15	6.6	-	42,720	220	108	4,900	2,100
	Flush Water (Oak Neck-L.I.)	-	-	-	-	-	-	< 4	< 4
	3 (Eff.)	30	7.2	-	42,720	220	105	10	10
	4 (Eff.)	2	7.1	-	42,720	220	190	59,000	58,000
	5 (Eff.)	40	7.1	-	42,720	220	185	10	10
	Flush Water (Stanford Harbor) (Buoy 32A)	-	-	-	-	-	-	< 4	< 4
	6	35	6.8	-	44,500	250	99	10	10
	7	30	7.0	-	44,500	250	124	10	10
	8	40	6.9	-	44,500	250	122	10	10
	Flush Water (Bridgeport Pier)	-	-	-	-	-	-	260	80

FIELD TEST RESULTS

Vessel: Arbutus
Study Period: September 13-14, 1966
Chlorine: 7% Available Chlorine (Sodium Hypochlorite)

Date	Sample No.	Hldg.Time Mac. Tank (min.)	pH	Settleable Solids (ml/l)*	Available Chlorine (mg/l)	Cl_2Inj. (ml)	Cl_2Residual (mg/l)	MF Total Coli. /100 ml	MF Fecal Coli. /100 ml
9/13/66	9	1.5	6.9	-	44,500	250	67	1,000,000	800,000
	10	3	6.9	-			97	27,000	16,000
9/14/66	11	5	6.9	-			92	3,300	2,200
	12	4	7.1	-			87	5,300	1,000
	13	10	6.9	-			160	8,500	1,000
	14	5	6.9	-			89	5,500	1,200
	15	1	6.8	-			80	1,200,000	200,000
	16	2	6.8	-			81	1,600,000	240,000
	17	13	6.9	-			64	6,000	1,000
	18	25	7.0	-			89	100	100
	19*	10	7.0	-			195	100	100
	20	3	6.9	-			51	4,000	1,000
	21*	3	6.9	-			302	400	100
	22*	3	7.0	-			534	100	100

* Very small amount of solids in these samples. (Characteristic of urine flushes).

FIELD TEST RESULTS

Vessel: Arbutus
Study Period: September 27-29, 1966
Chlorine: 15% Available Chlorine (Sodium Hypochlorite)

Date	Sample No.	Hldg.Time Mac. Tank (min.)	pH	Settleable Solids (ml/l)	Available Chlorine (mg/l)	Cl_2Inj. (ml)	Cl_2Residual (mg/l)	MF Total Coli. /100 ml	MF Fecal Coli. /100 ml
9/27/66	1	-	8.5	2.5	144,500	225	990	100	10
	2	17	9.2	-			2,700	100	100
	3	14	9.3	0.3			2,344	3,100	2,600
	4	23	9.1	3.0			1,800	58,000	1,000
	5	55	9.0	20.0			1,440	11,000	800
	6	3	9.3	27.0			1,440	11,000	400
	7	2	9.8	2.0			3,780	73,000	500
	8	13	9.3	50.0			1,800	630,000	18,000
	9	9	9.0	9.5			1,260	700,000	35,000
	10	2	9.1	33.0			1,440	1,000,000+	800,000+
	11	20	9.3	14.0			1,800	6,000	1,000
	12	-	8.3	8.5			900	1,000	100
	13	-	8.6	23.0		175	360	580,000	39,000
	14	3	8.8	33.0		175	504	2,000	100

FIELD TEST RESULTS

Vessel: Arbutus
Study Period: September 27-29, 1966
Chlorine: 15% Available Chlorine (Sodium Hypochlorite)

Date	Sample No.	Hldg.Time Mac. Tank (min.)	pH	Settleable Solids (ml/l)	Available Chlorine (mg/l)	Cl_2Inj. (ml)	Cl_2Residual (mg/l)	MF Total Coli. /100 ml	MF Fecal Coli. /100 ml
9/28/66	15	-	9.1	15.0	144,500	235	1,440	6,100	800
	16	2	9.1	24.0			900	63,000	200
	17	-	8.3	45.0			1,080	500	100
	18	2	8.3	36.0			540	4,200	3,100
	19	2	8.7	7.5			504	300	60
	20	10	9.1	40.0			684	100	100
	21	3	9.2	10.0			630	85,000	20,000
	22	10	8.8	6.5			432	25,000	22,000
	23	3	8.8	0.7			378	200	100
	24	7	9.0	1.0			666	100	100
	25	-	9.0	34.0			558	21,000	3,400
	26	4	9.6	25.0			1,458	100	100
	27	3	9.2	7.0			684	100	100
	28	3	9.3	3.0			864	400	100

FIELD TEST RESULTS

Vessel: Arbutus
Study Period: September 27-29, 1966
Chlorine: 15% Available Chlorine (Sodium Hypochlorite)

Date	Sample No.	Hldg.Time Mac. Tank (min.)	pH	Settleable Solids (ml/l)	Available Chlorine (mg/l)	Cl_2Inj.* (ml)	Cl_2Residual (mg/l)	MF Total Coli. /100 ml	MF Fecal Coli. /100 ml
9/29/66	29	-	8.0	40.0	144,500	235	522	34,000	10,000
	30	7	7.4	-	↓	↓	234	3,300	1,600
	31	13	8.4	40.0	↓	↓	810	1,900	1,500
	32	5	8.4	16.0	↓	↓	675	3,500	2,700
	33	-	8.4	29.0	↓	↓	585	2,700	2,200
	34	18	8.7	19.0	↓	↓	765	100	100

*Note: Settleable solids were difficult to determine because of abnormal amount of tissue that was present in the effluent.

FIELD TEST RESULTS

Vessel: Firebush
Study Period: October 17-21, 1966
Chlorine: 15% Available Chlorine (Sodium Hypochlorite)

Date	Sample No. No.	Hldg.Time Mac. Tank (min.)	pH	Settleable Solids (ml/l)	Available Chlorine (mg/l)	Cl_2Inj. (ml)	Cl_2Residual (mg/l)	MF Total Coli. /100 ml	MF Fecal Coli. /100 ml
10/17/66	Flush Water	-	-	-	-	-	-	240,000	20,000
	1	-	8.0	13.0	144,000	240	739	< 10	< 10
	2	42	7.2	33.0	↓	↓	619	< 10	< 10
	3	2	7.5	30.0	↓	↓	808	< 10	< 10
	4	8	9.0	20.0	↓	↓	997	< 10	< 10
	5	-	9.0	25.0	↓	↓	912	< 10	< 10
10/18/66	6	-	7.6	10.0	↓	↓	860	< 10	< 10
	7	11	8.6	2.5	↓	↓	894	< 10	< 10
	8	25	8.7	1.5	↓	↓	980	20	< 10
	9	9	8.8	10.0	↓	↓	963	< 10	< 10
	10	6	8.8	7.0	↓	↓	946	< 10	< 10
	11	10	9.6	8.5	↓	↓	1840*	140	80
	12	14	9.6	2.0	↓	↓	1100	< 10	< 10
	Flush Water	-	-	-	-	-	-	< 2	< 2

FIELD TEST RESULTS

Vessel: Firebush
Study Period: October 17-21, 1966
Chlorine: 15% Available Chlorine (Sodium Hypochlorite)

Date	Sample No.	Hldg.Time Mac. Tank (min.)	pH	Settleable Solids (ml/l)	Available Chlorine (mg/l)	Cl_2Inj. (ml)	Cl_2Residual (mg/l)	MF Total Coli. /100 ml	MF Fecal Coli. /100 ml
	13	-	8.8	30.0	144,000	240	739	< 10	< 10
	14	2	9.2	10.0			894	< 10	< 10
	15	5	9.2	23.0			1032	< 10	< 10
	16	12	9.4	40.0			1393	< 10	< 10
	17	30	7.8	40.0			1720	70	20
	18	5	7.8	40.0			980	210	40
	19	15	7.6	35.0			1014	300	100
	20	3	8.0	40.0			1135	< 100	< 100
	21	22	7.0	20.0			602	< 100	< 100
	22	2	7.2	22.0			791	20	< 10
10/19/66	23	-	7.9	40.0	141,000	190	928	< 10	< 10
	24	3	8.4	23.0			877	10	< 10
	25	4	8.5	25.0			1032	< 100	< 100
	26	4	8.8	40.0			1032	< 100	< 100

FIELD TEST RESULTS

Vessel: Firebush
Study Period: October 17-21, 1966
Chlorine: 15% Available Chlorine (Sodium Hypochlorite)

Date	Sample No.	Hldg.Time Mac. Tank (min.)	pH	Settleable Solids (ml/l)	Available Chlorine (mg/l)	Cl_2Inj. (ml)	Cl_2Residual (mg/l)	MF Total Coli. /100 ml	MF Fecal Coli. /100 ml
	27	7	8.9	15.0	141,000	190	894	< 100	< 100
	28	5	9.1	1.0	↓	↓	1083	< 100	< 100
	29	50	7.8	6.0	↓	↓	1083	100	< 100
	30	2	8.8	15.0	↓	↓	946	< 100	< 100
10/20/66	Flush Water	-	-	-	-	-	-	52,000	4,900
	31	-	8.6	18.0	137,600	190	1091	< 10	< 10
	32	40	7.7	35.0	↓	↓	602	< 10	< 10
	33	8	7.9	1.0	↓	↓	602	< 100	< 100
	34	51	8.2	33.0	↓	↓	447	< 100	< 100
	35	4	8.6	8.0	↓	↓	550	< 100	< 100
	36	10	8.9	14.0	↓	↓	498	< 100	< 100
	37	60	8.5	9.0	↓	↓	705	< 100	< 100
	38	3	8.8	7.0	↓	↓	727	< 100	< 100
	39	3	9.0	15.0	↓	↓	774	< 100	< 100

FIELD TEST RESULTS

Vessel: Firebush
Study Period: October 17-21, 1966
Chlorine: 15% Available Chlorine (Sodium Hypochlorite)

Date	Sample No.	Hldg.Time Mac. Tank (min.)	pH	Settleable Solids (ml/l)	Available Chlorine (mg/l)	Cl_2Inj. (ml)	Cl_2Residual (mg/l)	MF Total Coli. /100 ml	MF Fecal Coli. /100 ml
	40	2	6.5	-	137,600	190	946	< 100	< 100
	41	5	6.7	34.0	↓	↓	903	< 100	< 100
	42	5	7.0	60.0			791	< 100	< 100
	43	4	7.6	40.0			722	< 100	< 100
10/21/66	44	-	6.3	18.0			516	< 100	< 100
	45	4	6.7	4.5			533	< 100	< 100
	46	17	7.3	3.0			584	< 100	< 100
	47	9	7.0	2.5			464	< 100	< 100
	48	4	8.3	2.0			464	< 100	< 100
	49	40	7.0	1.5			361	< 100	< 100
	50	11	7.0	2.5			464	< 100	< 100
	51	19	9.0	25.0			653	100	< 100
	52	45	7.9	20.0			516	500	< 100
	53	5	8.4	8.0			584	< 100	< 100

FIELD TEST RESULTS

Vessel: Firebush
Study Period: October 17-21, 1966
Chlorine: 15% Available Chlorine (Sodium Hypochlorite)

Date	Sample No.	Hldg.Time Mac. Tank (min.)	pH	Settleable Solids (ml/l)	Available Chlorine (mg/l)	Cl_2Inj. (ml)	Cl_2Residual (mg/l)	MF Total Coli. /100 ml	MF Fecal Coli. /100 ml
	54	-	6.8	-	137,600	190	412	<100	<100
	55	7	7.9	-	↓	↓	464	<100	<100
	56	4	7.4	-	↓	↓	516	<100	<100

* Three simultaneous flushes occurred during this sample collection period.

FIELD TEST RESULTS

Vessel: Firebush
Study Period: October 24-26, 1966
Chlorine: 15% Available Chlorine (Sodium Hypochlorite)

Date	Sample No.	Hldg.Time Mac. Tank (min.)	pH	Settleable Solids (ml/l)	Available Chlorine (mg/l)	Cl_2Inj. (ml)	Cl_2Residual (mg/l)	MF Total Coli. /100 ml	MF Fecal Coli. /100 ml
10/24/66	57	-	6.6	3.2	134,160	150	344	<100	<100
	58	2	6.8	34.5			292	<100	<100
	59	3	7.6	40.0+			481	<100	<100
	60	5	8.0	40.0+			344	400	<100
	61	25	8.2	40.0+			430	400	200
	62	3	8.8	20.0			395	<100	<100
	63	3	8.8	25.0			619	800	<100
	64	42	8.2	40.0+			602	<100	<100
	65	3	8.5	40.0+			756	500	200
	66	4	8.8	32.0			688	6,200	1,800
	67	50	8.8	40.0+			705	<100	<100
	68	4	8.9	40.0+			791	200	<100
	69	-	8.2	-			516	<100	<100
	70	3	8.8	-			774	<100	<100

FIELD TEST RESULTS

Vessel: Firebush
Study Period: October 24-26, 1966
Chlorine: 15% Available Chlorine (Sodium Hypochlorite)

Date	Sample No.	Hldg.Time Mac. Tank (min.)	pH	Settleable Solids (ml/l)	Available Chlorine (mg/l)	Cl_2Inj. (ml)	Cl_2Residual (mg/l)	MF Total Coli. /100 ml	MF Fecal Coli. /100 ml
10/24/66	71	57	6.9	-	134,160	150	361	100	<100
10/25/66	72	-	7.1	1.5			344	1,400	100
	73	3	7.2	3.2			395	8,700	3,600
	74	5	8.6	3.4			430	21,000	6,200
	75	30	7.2	1.0			378	<100	<100
	76	4	8.3	5.0			516	<100	<100
	77	3	8.8	20.0			722	<100	<100
	78	53	6.5	40.0+			258	<100	<100
	79	2	7.0	20.0			326	4,600	1,900
	80	3	7.7	7.0			309	<100	<100
	81	52	6.6	2.0			275	200	100
	82	3	6.8	5.0			292	51,000	22,000
	83	2	7.4	5.0			326	45,000	11,000
	84	2	7.8	7.0			344	180,000	73,000

FIELD TEST RESULTS

Vessel: Firebush
Study Period: October 24-26, 1966
Chlorine: 15% Available Chlorine (Sodium Hypochlorite)

Date	Sample No.	Hldg.Time Mac. Tank (min.)	pH	Settleable Solids (ml/l)	Available Chlorine (mg/l)	Cl_2Inj. (ml)	Cl_2Residual (mg/l)	MF Total Coli. /100 ml	MF Fecal Coli. /100 ml
10/25/66	85	41	6.6	40.0+	134,160	150	172	<100	<100
	86	2	6.8	40.0+	↓	↓	240	64,000	34,000
	87	7	6.6	20.0	↓	↓	223	<100	<100
	88	21	6.4	-	↓	↓	258	<100	<100
10/26/66	89	-	6.4	2.0	138,880	200	430	<100	<100
	90	5	6.6	1.0	↓	↓	498	<100	<100
	91	2	7.4	1.0	↓	↓	550	2,700	600
	92	8	6.8	4.0	↓	↓	430	<100	<100
	93	2	7.2	20.0	↓	↓	594	<100	<100
	94	3	7.8	40.0+	↓	↓	756	2,200	2,100
	95	25	6.8	-	↓	↓	275	<100	<100
	96	5	7.4	40.0+	↓	↓	361	8,300	4,800
	97	2	7.0	40.0+	↓	↓	361	5,600	4,100
	98	13	8.4	30.0	↓	↓	688	<100	<100

FIELD TEST RESULTS

Vessel: Firebush
Study Period: October 24-26, 1966
Chlorine: 15% Available Chlorine (Sodium Hypochlorite)

Date	Sample No.	Hldg.Time Mac. Tank (min.)	pH	Settleable Solids (ml/l)	Available Chlorine (mg/l)	Cl_2Inj. (ml)	Cl_2Residual (mg/l)	MF Total Coli. /100 ml	MF Fecal Coli. /100 ml
10/26/66	99	5	8.8	30.0	138,880	200	852	3,600	1,900
	100	10	7.0	1.0	↓	↓	447	2,000	700
	101	2	7.4	1.0	↓	↓	430	1,900	1,300
	102	-	6.6	5.0	↓	↓	258	< 100	< 100
	103	2	7.4	5.0	↓	↓	395	< 100	< 100
	104	3	8.2	5.0	↓	↓	481	2,000	1,700
	105	-	8.6	40.0+	↓	↓	1,100	< 100	< 100
	106	80	8.2	20.0	↓	↓	378	< 100	< 100
	107	-	7.2	-	↓	↓	481	< 100	< 100
	108	2	7.6	-	↓	↓	481	< 100	< 100

FIELD TEST RESULTS

Vessel: Firebush
Study Period: October 31 - November 1, 1966
Chlorine: 15% Available Chlorine (Sodium Hypochlorite)

Date	Sample No.	Hldg.Time Mac. Tank (min)	pH	Settleable Solids (ml/l)	Available Chlorine (mg/l)	Cl_2 Inj. (ml)	Cl_2 Residual (mg/l)	MF Total Coli. /100 ml	MF Fecal Coli. /100 ml
10/31/66	109	-	6.6	2.0	137,600	190	344	< 10	< 10
	110	2	7.4	7.5			636	< 10	< 10
	111	1	7.9	14.0			430	< 10	< 10
	112	-	7.0	30.0			309	< 10	< 10
	113	3	8.5	50.0			464	24,000	4,400
	114	19	7.4	15.0			309	< 10	< 10
	115	4	8.7	15.0			602	< 10	< 10
	116	3	9.1	9.0			688	4,500	2,500
11/1/66	117	-	7.5	6.0			516	< 10	< 10
	118	3	8.9	1.7			756	< 10	< 10
	119	32	6.8	2.5			258	4,900	1,600
	120	2	8.3	2.7			395	< 10	< 10
	121	2	8.7	1.3			430	41,000	8,600
	122	-	6.7	2.5			567	9,100	1,400

FIELD TEST RESULTS

Vessel: Firebush
Study Period: October 31 - November 1, 1966
Chlorine: 15% Available Chlorine (Sodium Hypochlorite)

Date	Sample No.	Hldg.Time Mac. Tank (min)	pH	Settleable Solids (ml/l)	Available Chlorine (mg/l)	Cl_2 Inj. (ml)	Cl_2 Residual (mg/l)	MF Total Coli. /100 ml	MF Fecal Coli. /100 ml
	123	2	7.1	2.4	137,600	190	584	<10	< 10
	124	2	7.5	2.0	↓	↓	464	<10	< 10
	125	-	7.4	-	↓	↓	464	<10	< 10
	126	3	8.7	-	↓	↓	688	<10	<10

FIELD TEST RESULTS

Vessel: Firebush
Study Period: November 14-18, 21-22, 1966
Chlorine: 15% Available Chlorine (Sodium Hypochlorite)

Date	Sample No.	Hldg.Time Mac. Tank (min.)	pH	Settleable Solids (ml/l)	Available Chlorine (mg/l)	Cl_2Inj. (ml)	Cl_2Residual (mg/l)	MF Total Coli. /100 ml	MF Fecal Coli. /100 ml
11/14/66	127	-	7.0	1.6	133,500	235	240	< 10	< 10
	128	2	8.5	0.4			412	< 10	< 10
	129	19	7.4	0.7			464	< 10	< 10
	130	2	8.6	2.5			516	120,000	56,000
	131	35	8.1	42.0			378	< 10	< 10
	132	2	8.7	26.0			516	< 10	< 10
	133	2	8.6	42.0			412	31,000	7,200
	134	2	8.8	43.0			395	< 10	< 10
	135	55	7.2	21.0			275	< 10	< 10
	136	3	7.6	20.0			344	< 10	< 10
	137	2	8.1	23.0			412	20,000	4,900
	138	2	8.5	20.0			430	2,300	1,500
	139	6	6.8	14.0			309	< 10	< 10

FIELD TEST RESULTS

Vessel: Firebush
Study Period: November 14-18, 21-22, 1966
Chlorine: 15% Available Chlorine (Sodium Hypochlorite)

Date	Sample No.	Hldg.Time Mac. Tank (min.)	pH	Settleable Solids (ml/l)	Available Chlorine (mg/l)	Cl_2 Inj. (ml)	Cl_2 Residual (mg/l)	MF Total Coli. /100 ml	MF Fecal Coli /100 ml
	140	2	6.8	2.3	133,500	235	309	300	< 10
	141	2	7.0	0.7	↓	↓	378	< 10	< 10
	Flush Water	-	-	-	↓	↓	-	82,000	5,100
11/15/66	142	-	6.4	2.0	135,000	235	378	< 10	< 10
	143	2	7.8	1.5	↓	↓	468	< 10	< 10
	144	2	8.6	0.6	↓	↓	520	< 10	< 10
	145	-	6.2	16.0	↓	↓	216	< 10	< 10
	146	2	7.1	8.5	↓	↓	414	< 10	< 10
	147	-	7.3	6.0	↓	↓	540	< 10	< 10
	148	2	7.9	1.5	↓	↓	504	270,000	120,000
	149	10	8.4	0.4	↓	↓	450	67,000	48,000
	150	-	6.5	5.0	↓	↓	288	400	400
	151	3	6.6	1.0	↓	↓	306	< 10	< 10
	152	4	8.0	1.0	↓	↓	342	100	< 10

FIELD TEST RESULTS

Vessel: Firebush
Study Period: November 14-18, 21-22,1966
Chlorine: 15% Available Chlorine (Sodium Hypochlorite)

Date	Sample No.	Hldg.Time Mac. Tank (min.)	pH	Settleable Solids (ml/l)	Available Chlorine (mg/l)	Cl_2Inj. (ml)	Cl_2Residual (mg/l)	MF Total Coli. /100 ml	MF Fecal Coli. /100 ml
11/16/66	153	-	7.0	1.5	131,400	245	522	< 10	< 10
	154	2	8.4	1.2			576	< 10	< 10
	155	3	8.8	0.4			648	< 10	< 10
	156	-	8.1	8.0			486	< 10	< 10
	157	2	8.5	20.0			612	6,000	5,500
	158	2	8.8	15.0			612	1,000	400
	159	8	7.1	7.0			414	< 10	< 10
	160	3	8.4	3.2			558	15,000	15,000
	161	2	8.7	3.8			648	1,900	1,300
	162	6	8.6	1.5			414	< 10	< 10
	163	7	6.8	4.5			288	< 10	< 10
	164	2	8.4	5.0			450	7,000	2,000
	165	-	6.5	2.4			378	< 10	< 10
	166	4	6.9	0.5			486	< 10	< 10

FIELD TEST RESULTS

Vessel: Firebush
Study Period: November 14-18, 21-22, 1966
Chlorine: 15% Available Chlorine (Sodium Hypochlorite)

Date	Sample No.	Hldg.Time Mac. Tank (min.)	pH	Settleable Solids (ml/l)	Available Chlorine (mg/l)	Cl_2Inj. (ml)	Cl_2Residual (mg/l)	MF Total Coli. /100 ml	MF Fecal Coli. /100 ml
	167	2	7.9	0.4	131,400	245	486	1,000	<10
11/17/66	168	-	7.3	0.3		250	666	<10	< 10
	169	2	8.4	0.1			810	200	<10
	170	3	8.7	0.7			666	360,000	58,000
	171	2	8.7	0.7			648	9,000	< 10
	172	24	8.2	20.0			504	40,000	<10
	173	2	8.6	4.0			648	< 10	< 10
	174	2	8.8	9.0			756	< 10	<10
	175	-	6.3	0.2			414	100	< 10
	176	2	7.4	0.8			612	< 10	< 10
	177	4	8.6	6.0			738	<10	< 10
	178	-	7.2	1.2			666	1,000	600
	179	2	8.4	0.8			774	500	100
11/18/66	180	-	6.8	3.0	133,200	235	540	<10	<10

FIELD TEST RESULTS

Vessel: Firebush
Study Period: November 14-18, 21-22,1966
Chlorine: 15% Available Chlorine (Sodium Hypochlorite)

Date	Sample No.	Hldg.Time Mac. Tank (min.)	pH	Settleable Solids (ml/l)	Available Chlorine (mg/l)	Cl_2Inj. (ml)	Cl_2Residual (mg/l)	MF Total Coli. /100 ml	MF Fecal Coli. /100 ml
	181	2	7.2	6.0	133,200	235	576	500	< 10
	182	3	7.5	10.0			576	<10	< 10
	183	2	7.6	12.0			558	390,000	170,000
	184	7	8.6	2.8			540	7,900	4,800
	185	22	8.3	18.0			468	1,900	1,800
	186	2	8.7	21.0			720	100	< 10
	187	2	9.0	18.0			810	100	< 10
	188	33	8.2	40.0			414	3,100	900
	189	2	8.7	40.0			630	< 10	< 10
	190	3	8.8	18.0			666	700	300
	191	3	8.9	19.0			756	< 10	< 10
	192	-	7.9	24.0			450	< 10	< 10
	193	2	8.5	4.0			720	300	< 10
	194	2	8.8	7.5			576	900	200

FIELD TEST RESULTS

Vessel: Firebush
Study Period: November 14-18, 21-22, 1966
Chlorine: 15% Available Chlorine (Sodium Hypochlorite)

Date	Sample No.	Hldg.Time Mac. Tank (min.)	pH	Settleable Solids (ml/l)	Available Chlorine (mg/l)	Cl_2 Inj. (ml)	Cl_2 Residual (mg/l)	MF Total Coli. /100 ml	MF Fecal Coli. /100 ml
11/21/66	195	-	7.0	4.0	126,900	250	702	400	< 10
	196	2	6.4	1.5			756	< 10	< 10
	197	3	6.2	2.0			639	< 10	< 10
	198	-	6.7	5.0			390	7,900	6,500
	199	4	7.0	30.0			432	400	300
	200	3	7.0	40.0			729	< 10	< 10
	201	4	7.7	40.0			711	< 10	< 10
	202	53	6.8	16.0			501	< 10	< 10
	203	5	7.0	5.0			270	1,900	< 10
	204	2	6.8	7.0			279	500	< 10
	205	3	6.8	2.3			324	700	< 10
	206	5	6.2	1.0			270	200	100
	207	10	6.6	-			435	200	< 10
	208	2	6.9	-			486	100	< 10

FIELD TEST RESULTS

Vessel: Firebush
Study Period: November 14-18, 21-22, 1966
Chlorine: 15% Available Chlorine (Sodium Hypochlorite)

Date	Sample No.	Hldg.Time Mac. Tank (min.)	pH	Settleable Solids (ml/l)	Available Chlorine (mg/l)	Cl_2Inj. (ml)	Cl_2Residual (mg/l)	MF Total Coli. /100 ml	MF Fecal Coli. /100 ml
	209	2	8.1	-	126,900	250	540	< 10	< 10
11/22/66	210	-	6.9	5.2	129,600		396	100	< 10
	211	2	7.1	10.2			594	400	200
	212	2	7.2	5.1			738	1,100	1,000
	213	41	8.2	15.0			747	1,300	700
	214	3	7.7	18.0			810	200	100
	215	2	8.8	12.0			936	< 10	< 10
	216	2	8.9	15.0			1386	1,100	<10
	217	-	8.0	30.5			1224	700	200
	218	2	8.4	20.0			1413	1,000	< 10
	219	2	8.9	20.0			1854	< 10	< 10
	220	2	9.0	10.0			1062	< 10	< 10
	221	-	6.0	40.0			216	400	300
	222	3	6.6	25.0			1458	200	< 10

FIELD TEST RESULTS

Vessel: Firebush
Study Period: November 14-18, 21-22, 1966
Chlorine: 15% Available Chlorine (Sodium Hypochlorite)

Date	Sample No.	Hldg.Time Mac. Tank (min.)	pH	Settleable Solids (ml/l)	Available Chlorine (mg/l)	Cl_2 Inj. (ml)	Cl_2 Residual (mg/l)	MF Total Coli. /100 ml	MF Fecal Coli. /100 ml
	223	2	6.4	15.0	129,600	250	234	100	<10
	224	2	8.1	15.0	↓	↓	513	<10	<10
	225	-	7.8	-	↓	↓	432	<10	<10
	226	3	8.6	-	↓	↓	612	<10	<10
	227	2	7.6	-	↓	↓	747	<10	<10

FIELD TEST RESULTS

Vessel: Firebush
Study Period: November 28-30, 1966
Chlorine: 15% Available Chlorine (Sodium Hypochlorite)

Date	Sample No.	Hldg.Time Mac. Tank (min.)	pH	Settleable Solids (ml/l)	Available Chlorine (mg/l)	Cl_2Inj. (ml)	Cl_2Residual (mg/l)	MF Total Coli. /100 ml	MF Fecal Coli. /100 ml
11/28/66	228	-	6.8	20	138,600	250	396	< 10	< 10
	229	3	7.8	15			612	< 10	< 10
	230*	2	8.3	10			918	< 10	< 10
	231	35	7.8	40			558	< 10	< 10
	232	3	8.5	40			684	< 10	< 10
	233	2	9.0	15			918	< 10	< 10
	234	36	8.2	2			882	< 10	< 10
	235	2	8.7	6			684	< 10	< 10
	236	2	8.9	24			954	< 10	< 10
	237	2	9.2	10			1062	< 10	< 10
	238*	3	9.0	4			1098	< 10	< 10
	239	-	7.6	1			486	< 10	< 10
	240	2	8.4	2			738	< 10	< 10
	241	2	8.8	6			774	4,600	3,300

FIELD TEST RESULTS

Vessel: Firebush
Study Period: November 28-30, 1966
Chlorine: 15% Available Chlorine (Sodium Hypochlorite)

Date	Sample No.	Hldg.Time Mac. Tank (min.)	pH	Settleable Solids (ml/l)	Available Chlorine (mg/l)	Cl_2Inj. (ml)	Cl_2Residual (mg/l)	MF Total Coli. /100 ml	MF Fecal Coli. /100 ml
	242	2	9.0	13	138,600	250	900	1,600	1,500
	243	2	9.2	-	↓	↓	810	< 10	< 10
	Flush later	-	-	-	-	-	-	38,000	2,700
11/29/66	244	-	6.2	12	136,800	250	288	< 10	< 10
	245	3	6.4	2			324	< 10	< 10
	246	2	6.5	1			576	< 10	< 10
	247	-	6.3	5			378	900	800
	248	2	7.6	3.5			558	< 10	< 10
	249	3	8.2	1.5			666	< 10	< 10
	250*	2	8.6	7			846	< 10	< 10
	251	-	6.4	40			270	< 10	< 10
	252	2	6.6	12			306	< 10	< 10
	253	4	6.4	5			396	< 10	< 10
	254	2	7.0	15	↓	↓	540	< 10	< 10

FIELD TEST RESULTS

Vessel: Firebush
Study Period: November 28-30, 1966
Chlorine: 15% Available Chlorine (Sodium Hypochlorite)

Date	Sample No.	Hldg.Time Mac. Tank (min.)	pH	Settleable Solids (ml/l)	Available Chlorine (mg/l)	Cl_2 Inj. (ml)	Cl_2 Residual (mg/l)	MF Total Coli. /100 ml	MF Fecal Coli. /100 ml
	255	2	7.6	12	136,800	250	612	<10	<10
	256	2	8.1	10	↓	↓	504	<10	<10
	257	2	6.8	6.5	↓	↓	378	<10	<10
	258	2	7.5	6	↓	↓	396	<10	<10
	259	3	7.0	2	↓	↓	396	<10	<10
	260	3	7.3	2	↓	↓	450	<10	<10
11/30/66	261	-	6.8	38	135,000	250	288	<10	<10
	262	2	6.8	2	↓	↓	396	<10	<10
	263*	3	6.8	1.9	↓	↓	396	<10	<10
	264	54	6.6	3	↓	↓	306	<10	<10
	265	2	6.9	3	↓	↓	540	<10	<10
	266*	2	7.2	0.7	↓	↓	576	<10	<10
	267	12	6.2	5	↓	↓	324	<10	<10
	268	3	6.7	4.5	↓	↓	504	<10	<10

FIELD TEST RESULTS

Vessel: Firebush
Study Period: November 28-30, 1966
Chlorine: 15% Available Chlorine (Sodium Hypochlorite)

Date	Sample No.	Hldg.Time Mac. Tank (min.)	pH	Settleable Solids (ml/l)	Available Chlorine (mg/l)	Cl_2 Inj. (ml)	Cl_2 Residual (mg/l)	MF Total Coli. /100 ml	MF Fecal Coli. /100 ml
	269	2	7.9	8	135,000	250	504	< 10	< 10
	270	3	7.6	5	↓	↓	558	< 10	< 10
	271	2	8.6	6	↓	↓	648	< 10	< 10
	272	-	6.5	4	↓	↓	234	< 10	< 10
	273	2	6.6	1	↓	↓	288	< 10	< 10
	274	2	6.6	0.7	↓	↓	288	< 10	< 10
	275	2	6.6	0.7	↓	↓	432	< 10	< 10

* Flush samples.

FIELD TEST RESULTS

Vessel: Tuckahoe
Study Period: June 28, 1967
Chlorine: 15% Available Chlorine (Sodium Hypochlorite)

Date	Sample No.	Hldg.Time Mac. Tank (min.)	pH	Settleable Solids (ml/l)	Available Chlorine (mg/l)	Cl_2 Inj. (ml)	Cl_2 Residual (mg/l)	MF Total Coli. /100 ml	MF Fecal Coli. /100 ml
6/28/67	1	30	-	-	76,000	225	195	10	10
	2	40	-	-			195	10	10
	3	10	-	-			125	10	10
	4	10	-	-			160	60	10
	5	15	-	-			160	10	10

FIELD TEST RESULTS

Vessel: Navesink
Study Period: November 27, 1967
Chlorine: Available Chlorine (Sodium Hypochlorite)

Date	Sample No.	Hldg.Time Mac. Tank (min.)	pH	Settleable Solids (ml/l)	Available Chlorine (mg/l)	Cl_2Inj. (ml)	Cl_2Residual (mg/l)	MF Total Coli. /100 ml	MF Fecal Coli. /100 ml
11/27/67	1	15	-	-	95,600	225	265	< 10	< 10
	2	90	-	-	↓	↓	250	< 10	< 10
	3	25	-	-	↓	↓	370	< 10	< 10