United States
Environmental Protection
Agency

Industrial Environmental Research
Laboratory
Research Triangle Park NC 27711

EPA-600/7-79-199d
August 1979

EPA

Survey of Flue Gas Desulfurization Systems: Sherburne County Generating Plant, Northern States Power Co.

Interagency Energy/Environment R&D Program Report

EPA-600/7-79-199d

August 1979

Survey of Flue Gas Desulfurization Systems: Sherburne County Generating Plant, Northern States Power Co.

by

Bernard A. Laseke, Jr.

PEDCo Environmental, Inc.
11499 Chester Road
Cincinnati, Ohio 45246

Contract No. 68-02-2603
Task No. 24
Program Element No. EHE624

EPA Project Officer: Norman Kaplan

Industrial Environmental Research Laboratory
Office of Energy, Minerals, and Industry
Research Triangle Park, NC 27711

Prepared for

U.S. ENVIRONMENTAL PROTECTION AGENCY
Office of Research and Development
Washington, DC 20460

CONTENTS

		Page
Figures		iii
Tables		iv
Acknowledgements		vi
Summary		vii
1.	Introduction	1
2.	Facility Description	2
3.	Flue Gas Desulfurization (FGD) System	13
	Background Information	13
	Process Description	18
	Process Design	24
	Waste Disposal	36
	Process Chemistry	38
	Process Control	43
4.	FGD System Performance	47
	Background Information	47
	Operating History and Performance	48
	Problems and Solutions	52
5.	FGD Economics	62
	Introduction	62
	Approach	62
	Description of Cost Elements	64
	Results	64
Appendices		
A.	Plant Survey Form	A-1
B.	Plant Photographs	B-1
C-1.	Operational FGD System Cost Data	C-1
C-2.	Cost Adjustments	C-14

FIGURES

Number		Page
1	Map Showing Power Plants and Population Centers in the Sherburne County Vicinity	3
2	Site Plan of the Sherburne County Generating Plant	4
3	Side Elevation View of the Sherburne Steam Generator	6
4	Plan View of the Sherburne Power Generating Complex	9
5	Side View of the Sherburne Power Generating Complex	10
6	Simplified Process Flow Diagram of the Sherburne Scrubbing System	11
7	Simplified Process Flow Diagram of the Sherburne Prototype Scrubber	16
8	Simplified Diagram of a Sherburne Scrubber Module	21
9	Close-up View of the Sherburne Scrubber Module Holding Tank and Reaction Tank Configuration	23
10	Diagram of Sherburne's First Scrubbing Stage	28
11	Simplified Flow Diagram and Typical Flow Rates of Sherburne Scrubbing System Water Network	39
12	Original Arrangement of Sherburne Scrubber Module Featuring the Duplex Strainer, Perforated Plate, and Comminuter	53
13	Redesigned In-tank Strainer and Wash-lance Arrangement	55

TABLES

Number		Page
1	Data Summary: Sherburne 1 and 2	xi
2	Characteristics of Coal Fired at Sherburne	5
3	Design, Operation, and Emission Data: Sherburne 1 and 2	12
4	Specifications and Consumption Rate of Performance Coal	24
5	Ash Composition and Concentration Data	25
6	First Scrubbing Stage Design Parameters and Operating Conditions	27
7	Marble-bed Scrubbing Stage Design Parameters and Operating Conditions	30
8	Mist Eliminator Design Parameters and Operating Conditions	31
9	Reheater Design Parameters and Operating Conditions	32
10	Induced-draft Fan Design Parameters and Operating Conditions	34
11	Sherburne Scrubbing System Draft Losses	34
12	Pump Design Parameters and Operating Conditions	35
13	Thickener Design Parameters and Operating Conditions	36
14	Limestone Storage and Preparation Design Parameters and Operating Conditions	37
15	Sherburne 1 Performance Summary: May 1976 to September 1978	50

(continued)

TABLES (Continued)

Number		Page
16	Sherburne 2 Performance Summary: April 1977 to September 1978	51
17	Summary of Sherburne 3 Emission Control System	61
18	Sherburne 1 and 2 Reported Capital Costs	65
19	Sherburne 1 and 2 Reported Annual Costs	65
20	Sherburne 1 and 2 Adjusted Capital Costs	66

ACKNOWLEDGMENTS

This report was prepared under the direction of Mr. Timothy Devitt. The principal author was Mr. Bernard Laseke.

Mr. Norman Kaplan, EPA Project Officer, had primary responsibility within EPA for this project report. Information on plant design and operation was provided by the following members of the Northern States Power Company: Mr. B. Catron, Assistant Production Engineer; R.J. Kruger, Environmental and Chemical Systems Supervisor; and J.A. Noer, Project Engineer. Mr. A.J. Snider, Manager, Environmental Control, of Combustion Engineering, also provided information on plant design and operation.

SUMMARY

The Sherburne County generating plant is a new coal-fired, steam-powered, electric generating station located in Sherburne County near Becker, Minnesota. It is designed as a four-unit station, with the two units now in service generating 1440 MW (gross); and a projected four-unit generating capacity of 3200 MW (gross). The station is wholly owned and operated by the Northern States Power Company (NSP), which serves the energy needs of the Minnesota, Wisconsin, North Dakota, and South Dakota areas.

Sherburne 1 and 2 are currently operational. Sherburne 1 was first placed in service on March 16, 1976, and was placed in full commercial operation on May 1, 1976. Sherburne 2 was placed in service on January 25, 1977, and in full commercial operation on April 1, 1977. Sherburne 3 is in the planning stage and is scheduled to begin operation in May 1984.

Sherburne 1 and 2 are each rated at 720 MW (gross), and fire a low-sulfur, western, subbituminuous coal from the Colstrip and Sarpy Creek regions of southern Montana. The coal typically contains 0.8 percent sulfur, 9 percent ash, 25 percent moisture, and has a heating value of 19,800 kJ/kg (8,500 Btu/lb). To meet emission regulations promulgated by the Minnesota Pollution Control Agency, each unit is equipped with a two-stage wet scrubbing system, using alkaline fly ash/limestone for the control of particulate and sulfur dioxide.

These scrubbing systems were designed and supplied by Combustion Engineering. Each consists of 12 two-stage scrubber modules, 11 of which are required for full-load operation. The modules are arranged in a four by three matrix. Each module consists of a rod scrubber in series with a single-stage marble-bed absorber; a two-stage chevron mist eliminator; and an in-line

hot water reheater. Four induced-draft fans (one for each group of three modules) are located downstream of the modules, and are operated in tandem with two forced-draft fans to compensate for draft losses in the unit. The spent scrubbing slurry from each system is concentrated in a thickener and discharged to a clay-lined settling pond on the site. The pond supernatant is returned to the scrubbing systems for reuse.

Alkalinity for sulfur dioxide removal is provided by the calcium oxide in the collected fly ash and the calcium carbonate in the limestone. Raw limestone rock is received at the plant and ground in wet ball mills to a slurry containing 4 percent solids, which is added to the internal reaction tank of each scrubber module.

The Sherburne scrubbing systems were designed for a minimum availability* of 90 percent while achieving particulate and sulfur dioxide control levels defined by the following formula: particulate in the flue gas exiting the scrubber not to exceed 1 percent of the inlet value or 0.09 g/m^3 (0.04 gr/scf),† whichever is greater; sulfur dioxide in the flue gas exiting the scrubber not to exceed 50 percent of the inlet value or 200 ppm, whichever is greater.

The Sherburne 1 and 2 scrubbing systems were started up at the same time as the power generating units, and were certified commercial on May 1, 1976, and April 1, 1977, respectively. Operation during and after startup has revealed a number of chemical, mechanical, and design problems. The major ones included failure of the in-line slurry recirculation strainers, ultimately leading to severe nozzle plugging; erosion of the rods and housing in the rod scrubbers; erosion of the sidewalls of the

---

* Availability: The number of hours the scrubber system is available for operation (whether operated or not), divided by the number of hours in the period, expressed as a percentage.

† Dry basis.

internal reaction tank associated with the rod scrubber; mist eliminator plugging; reheater tube corrosion; premature failure of the rubber lining in the slurry piping; premature failure of recirculation pump impellers; premature failure of the protective fiberglass lining in some of the scrubber modules; failure of the comminuter system, ultimately leading to its removal; and failure of the original bleedoff system, requiring replacement with a separate effluent bleedoff pump system.

Nearly all these problems have been or are being resolved through system design modifications. The modifications, coupled with the additional operating experience gained by the utility, have increased system availability. By October 1978, the Sherburne 1 and 2 scrubbing systems had achieved total system availabilities of 92 and 94 percent, respectively, each of which is above the minimum design level of 90 percent.

Several performance tests and data from continuous monitoring have demonstrated compliance with emission regulations. The systems have typically been removing approximately 99 percent of the inlet particulate matter [6.9 g/m^3 (3.0 gr/scf) inlet, 0.09 g/m^3 (0.04 gr/scf) outlet];* and 55 to 60 percent of the inlet sulfur dioxide (700 ppm inlet, 300 ppm outlet). Problems have been encountered in complying with opacity requirements. Even when the systems have been meeting or exceeding design particulate control levels, opacity has been in the range of 40 to 45 percent, or about twice the regulatory limitation.

Northern States Power has reported the total capital cost of the Sherburne 1 and 2 emission control systems, including air quality control and waste disposal, to be $69,064,040. Based on a gross generating capacity of 1440 MW, this amounts to 48.0/kW. The total annual cost of the scrubbing systems, including air quality control and waste disposal, was reported to be $15,014,800. This figure includes $7,994,800 in variable charges and $7,020,000

---

* Dry basis.

in fixed charges. Based on a station capacity factor of 75.7 percent for 1977, for a total net power production of 7.535×10^9 kWh, total annual costs amount to 1.99 mills/kWh.

Sherburne 3, which is rated at 860 MW (gross), will be erected alongside Sherburne 1 and 2. This unit will also be equipped with wet scrubbing systems using alkaline fly ash/limestone, to be designed and supplied by Combustion Engineering. This system will have eight two-stage scrubber modules, seven of which will be required for full-load operation. The system will consist of a rod scrubber, designed for particulate control, in series with a vertical countercurrent spray tower absorber. This system is designed to remove 99.5 percent of the inlet particulate and 80 percent of the inlet sulfur dioxide. The utility and system supplier are now conducting a series of tests on Module 101 of Sherburne 1 to determine the design and operating characteristics of the Sherburne 3 scrubbing system.

Table 1 presents a summary of data on Sherburne 1 and 2 and on the FGD scrubbing systems.

TABLE 1. DATA SUMMARY: SHERBURNE 1 AND 2

Units	1 and 2
Gross rating, MW	1440
Net rating, MW	1360
Fuel	Coal
Average fuel characteristics:	
Heating value, kJ/kg (Btu/lb)	19,800 (8,500)
Ash, percent	9
Moisture, percent	25
Sulfur, percent	0.8
FGD process	Alkaline fly ash/limestone
FGD system supplier	Combustion Engineering
Application	New
Status	Operational
Startup dates:	
Initial	March 16, 1976 (Unit 1) January 25, 1977 (Unit 2)
Commercial	May 1, 1976 (Unit 1) April 1, 1977 (Unit 2)
Design removal efficiency:	
Particulate, percent	99
Sulfur dioxide, percent	50
Water loop	Closed[a]
Sludge disposal	Forcibly oxidized sludge disposed in an onsite clay-lined settling pond
Economics (reported):	
Capital, $/kW (gross)	48.0
Annual, mills/kWh (net)	1.99

[a] The water loop for this system is a closed loop design and has operated as such during the pas 12 to 18 months. NSP has a permit to discharge some water from the plant's holding basin into the Mississippi River. This discharge is regulated within limits established by permits from regulatory agencies.

SECTION 1

INTRODUCTION

The Industrial Environmental Research Laboratory (IERL) of the U.S. Environmental Protection Agency (EPA) has initiated a study to evaluate the performance characteristics and reliability of flue gas desulfurization (FGD) systems operating on coal-fired utility boilers in the United States.

This report, one of a series on such systems, covers the Sherburne County generating plant of the Northern States Power Company. It includes pertinent process design and operating data, a description of major startup and operational problems and solutions, atmospheric emission data, and capital and annual cost information.

This report is based on information obtained during and after plant inspections conducted for PEDCo Environmental personnel on May 19, 1977, and April 7, 1978, by the Northern States Power Company. The information presented in this report is current as of November 1978.

Section 2 provides information and data on facility design and operation; Section 3 provides background information and a detailed description of the air quality and waste disposal systems; Section 4 describes and analyzes the operation and performance of the air quality and waste disposal systems; and Section 5 provides a detailed review of capital and annual costs, including values reported by the utility and PEDCo-adjusted values. Appendices A, B, and C contain details of plant and system operation, reported and adjusted capital and annual cost data, and photos of the installation.

SECTION 2

FACILITY DESCRIPTION

The Sherburne County generating plant is a new 3200-MW power generating station, comprising four coal-fired units, that is wholly owned and operated by the Northern States Power Company. The last two units are in the planning stage. The third unit is scheduled for completion in 1984. The station is located in Sherburne County, near the village of Becker (population: about 500), Minnesota. It is situated in a lightly industrialized, rural area of south-central Sherburne County, at a site 3 km (2 miles) southwest of Becker and 68 km (42 miles) northwest of Minneapolis, Minnesota. The site is bounded on the southwest by the Mississippi River. The water intake structure of the plant is located on the bank of the river, but the plant itself is about 1.5 km (1 mile) distant. The plant encompasses 6.9 km^2 (1700 acres) of land.

Another major power station, Monticello, occupies a site approximately 10 km (6 miles) downstream from Sherburne. This station, which is also owned and operated by NSP, contains one 562-MW nuclear power generating unit. A map of the area, showing the power stations and population centers, is provided in Figure 1. A site plan of the Sherburne County generating plant is provided in Figure 2.

Each of the two units now in operation is equipped with its own steam generator and turbine generator. The steam generator is a controlled circulation, single-reheat, balanced-draft unit supplied by Combustion Engineering. Each unit is designed to produce 2261 Mg (4,985,000 lb) per hour of superheat steam at 542°C (1007°F) and 18.3 MPa (2640 psig); and 2042 Mg (4,501,000

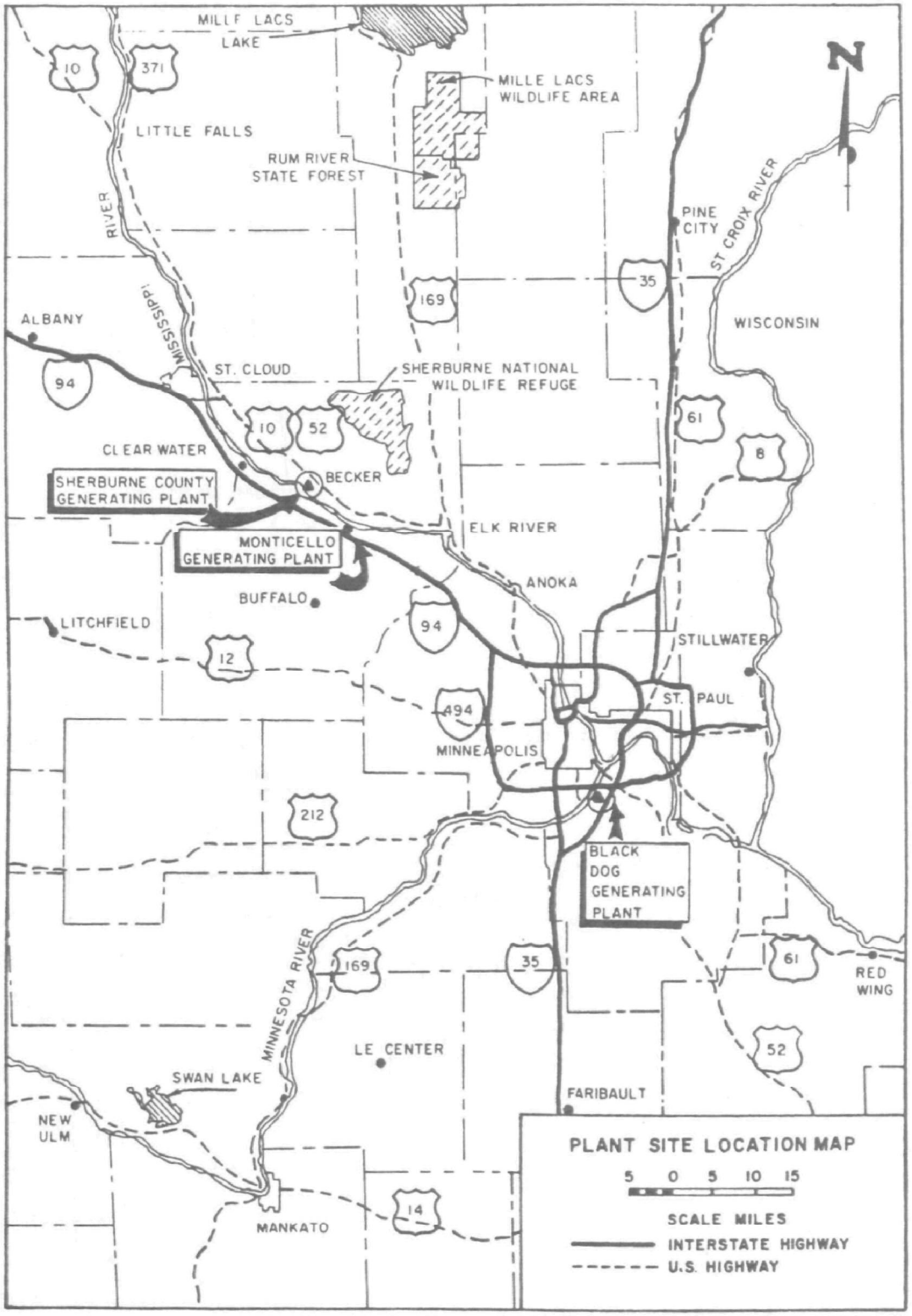

Figure 1. Map showing power plants and population centers in the Sherburne County vicinity.

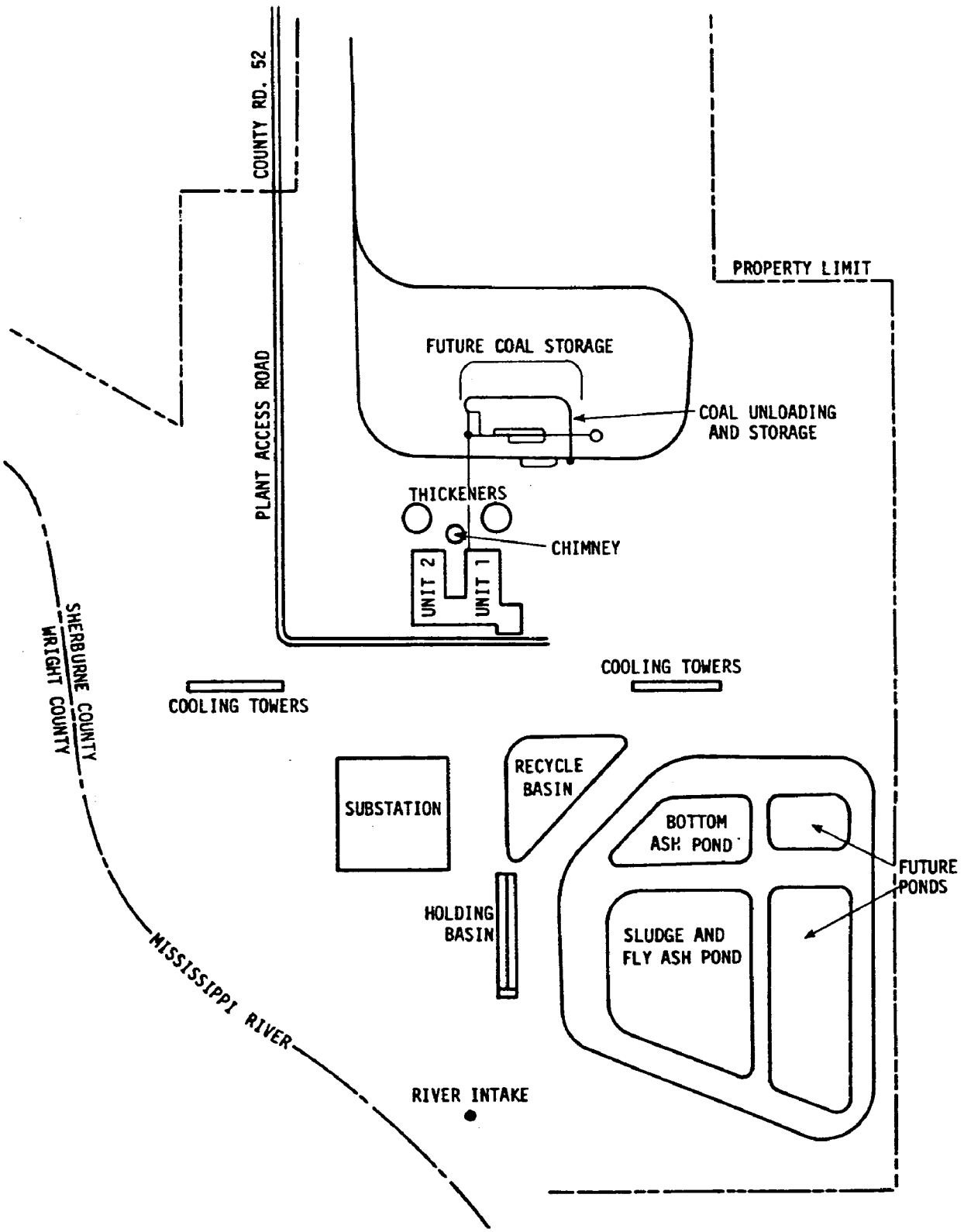

Figure 2. Site plan of the Sherburne County generating plant.

lb) per hour of reheat steam at 540°C (1005°F). Superheat inlet feedwater temperature is 252°C (487°F), and reheat steam inlet conditions are 335°C (636°F) and 4.2 MPa (597 psig). A side elevation view of the Sherburne steam generator is provided in Figure 3.

The turbine generator is a General Electric tandem compound unit, with inlet steam conditions of 538°C/538°C (1000°F/1000°F) and 16.7 MPa (2400 psig). At these conditions, the generator is capable of producing 660 MW; but since it is designed for continuous operation at 5 percent overpressure, the maximum capability is 740 MW.

Two auxiliary oil-fired steam generators are provided for both units to supply the steam for startup for main turbine sealing, main boiler feed pump turbines, deaerators for each main unit, and the auxiliary deaerator. Each of these auxiliary steam generators are Riley Stoker shop-assembled units designed to fire No. 2 fuel oil and produce 34 Mg (75,000 lb) of steam per hour.

The Sherburne units burn a low-sulfur, western coal that originates from the Colstrip and Sarpy Creek regions of southern Montana. The Colstrip coal is supplied primarily from mines owned and operated by Western Energy, and the Sarpy Creek coal from mines owned and operated by Westmoreland Resources. Table 2 presents the average characteristics of the coal burned at the plant.

TABLE 2. CHARACTERISTICS OF COAL FIRED AT SHERBURNE

Characteristic	Average
Heating value, kJ/kg (Btu/lb)	19,800 (8,500)
Ash, percent	9
Moisture, percent	25
Sulfur, percent	0.8

The coal is delivered to the plant by unit train at a frequency of approximately ten 100-car trains each week. This amounts to an average consumption of 90 Gg (100,000 tons) of coal

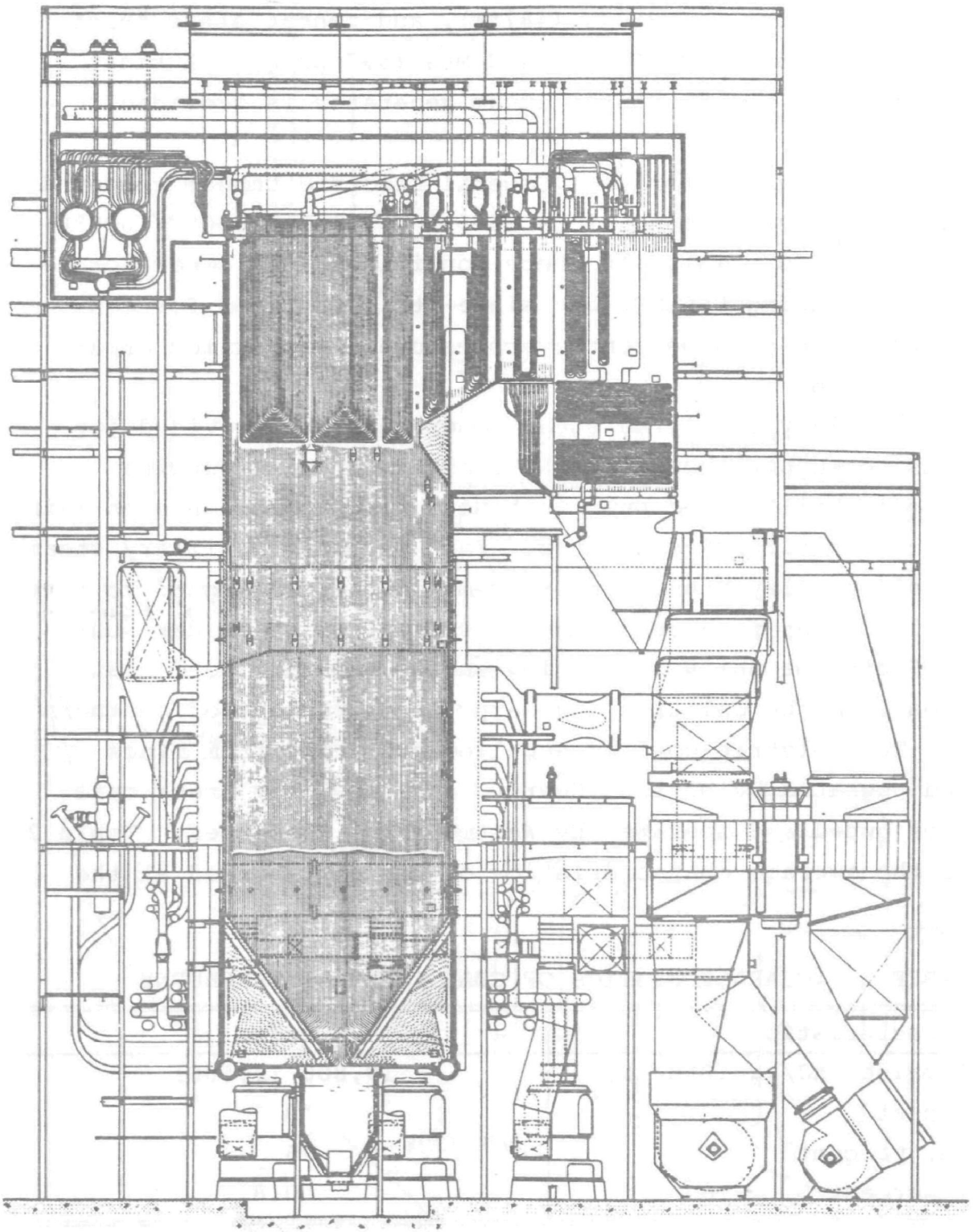

Figure 3. Side view of Sherburne steam generator.

per week for both units. Rail spurs are located on the plant site to accommodate two trains simultaneously, one unloading and one waiting. The cars are unloaded by an automatically controlled rotary dumper and train positioner at a rate of 3175 Mg (3500 tons) per hour. The coal is then transferred either to a yard storage area where active and dead coal piles are maintained, or directly to the plant for firing.

The active coal pile contains approximately 82 Gg (90,000 tons) of coal available for automatic reclaim by a bucket-wheel reclaimer. The dead coal pile contains approximately 1 Tg (1.1 million tons) of coal, or about 60 days' supply for both units. Coal for the steam generators is conveyed to the plant by a split-stream bypass at the stacker-reclaimer at a rate of 1800 Mg (2000 tons) per hour. The rate of bypass or reclaim from the active pile is controlled to maintain the desired weight in a 270-Mg (300-ton) storage hopper above the crushers. After crushing, the coal is transferred via conveyor to a 90-Mg (100-ton) transfer hopper and then to four banks of coal silos by the steam generators.

To meet air emission regulations promulgated by the Minnesota Pollution Control Agency, each unit has been fitted with an alkaline fly ash/limestone wet scrubbing system. Each system consists of 12 two-stage scrubber modules for the control of particulate and sulfur dioxide. These systems were supplied by Combustion Engineering as an integral part of the power generating facilities, and the duct work is arranged so that flue gas cannot bypass the scrubber modules.

The emission control systems are designed to control particulate and sulfur dioxide levels according to the following formula: particulate in the flue gas exiting the scrubber not to exceed 1 percent of the inlet value or 0.09 g/m^3 (0.04 gr/scf) on a dry basis, whichever is greater; sulfur dioxide in the flue gas exiting the scrubber not to exceed 50 percent of the inlet value, or 200 ppm, whichever is greater. These control levels

are in compliance with air emission requirements of the Minnesota Pollution Control Agency. The limits for the Sherburne 1 and 2 stack for particulate are 37 ng/J (0.097 lb/10^6 Btu) of heat input to the boiler, and for sulfur dioxide are 413 ng/J (0.96 lb/10^6 Btu) of heat input to the boiler. The results of several performance tests and of data from continuous monitoring have demonstrated compliance with these regulations. The systems have typically been removing 99 percent of the inlet particulate having inlet and outlet levels of 6.9 g/m^3 (3.0 gr/scf) and 0.09 g/m^3 (0.04 gr/scf), dry basis, respectively; and 55 to 60 percent of the inlet sulfur dioxide, having inlet and outlet values of 700 ppm and 300 ppm, respectively.

Figures 4 and 5 provide an overview and a side view of the power generating complex, including the emission control systems. Figure 6 provides a simplified process flow diagram of the Sherburne scrubbing system. Table 3 presents data on plant design, operation, and atmospheric emissions.

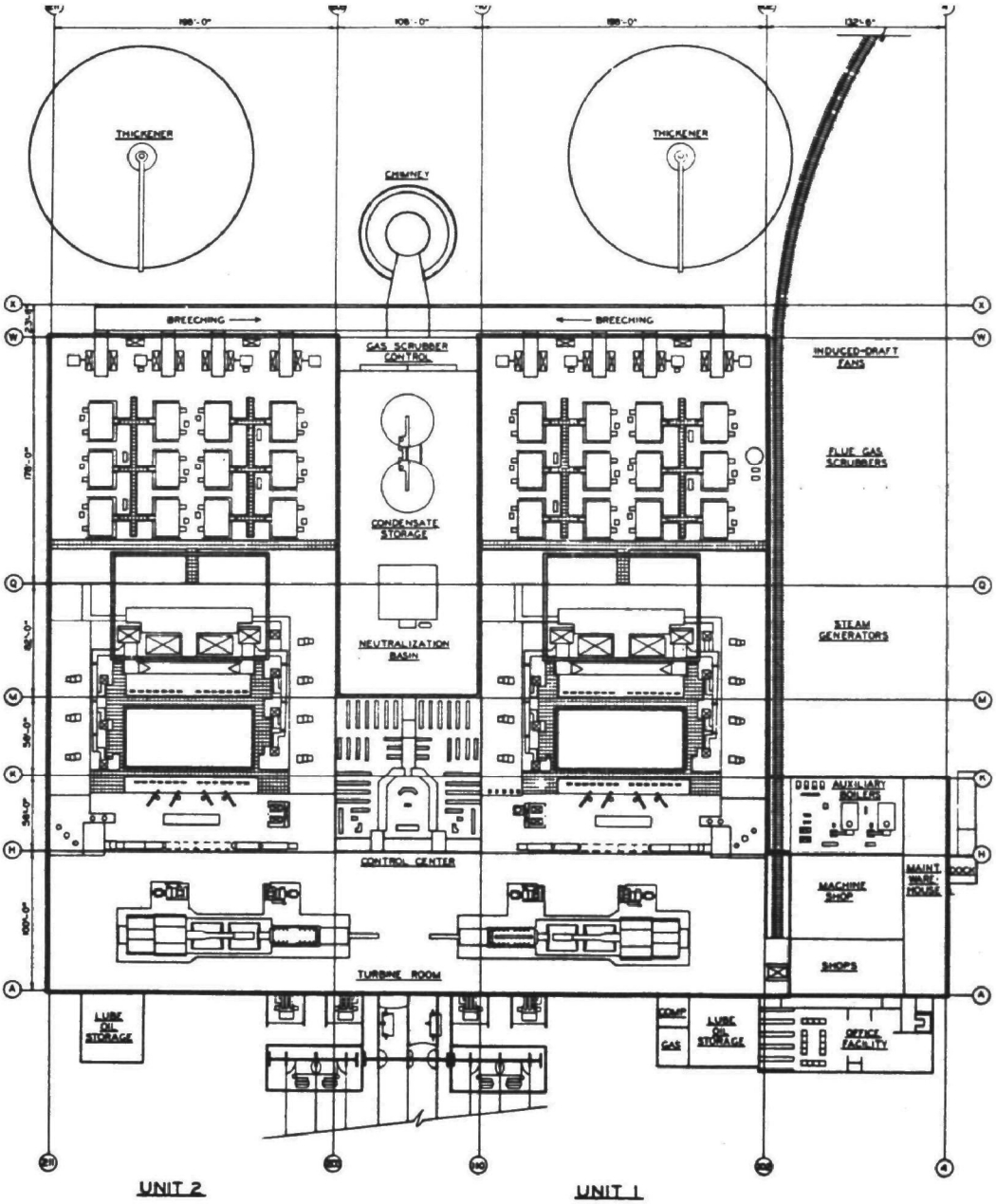

Figure 4. Plan view of the Sherburne power generating complex.

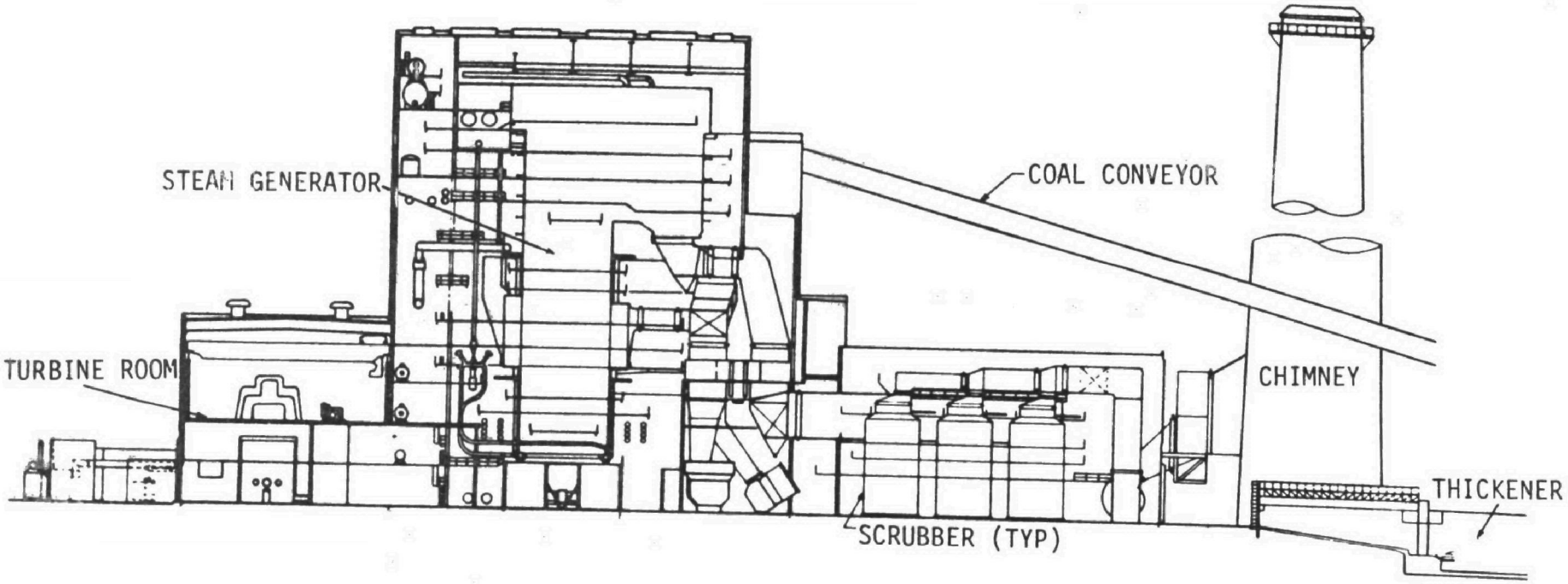

Figure 5. Side view of the Sherburne power generating complex.

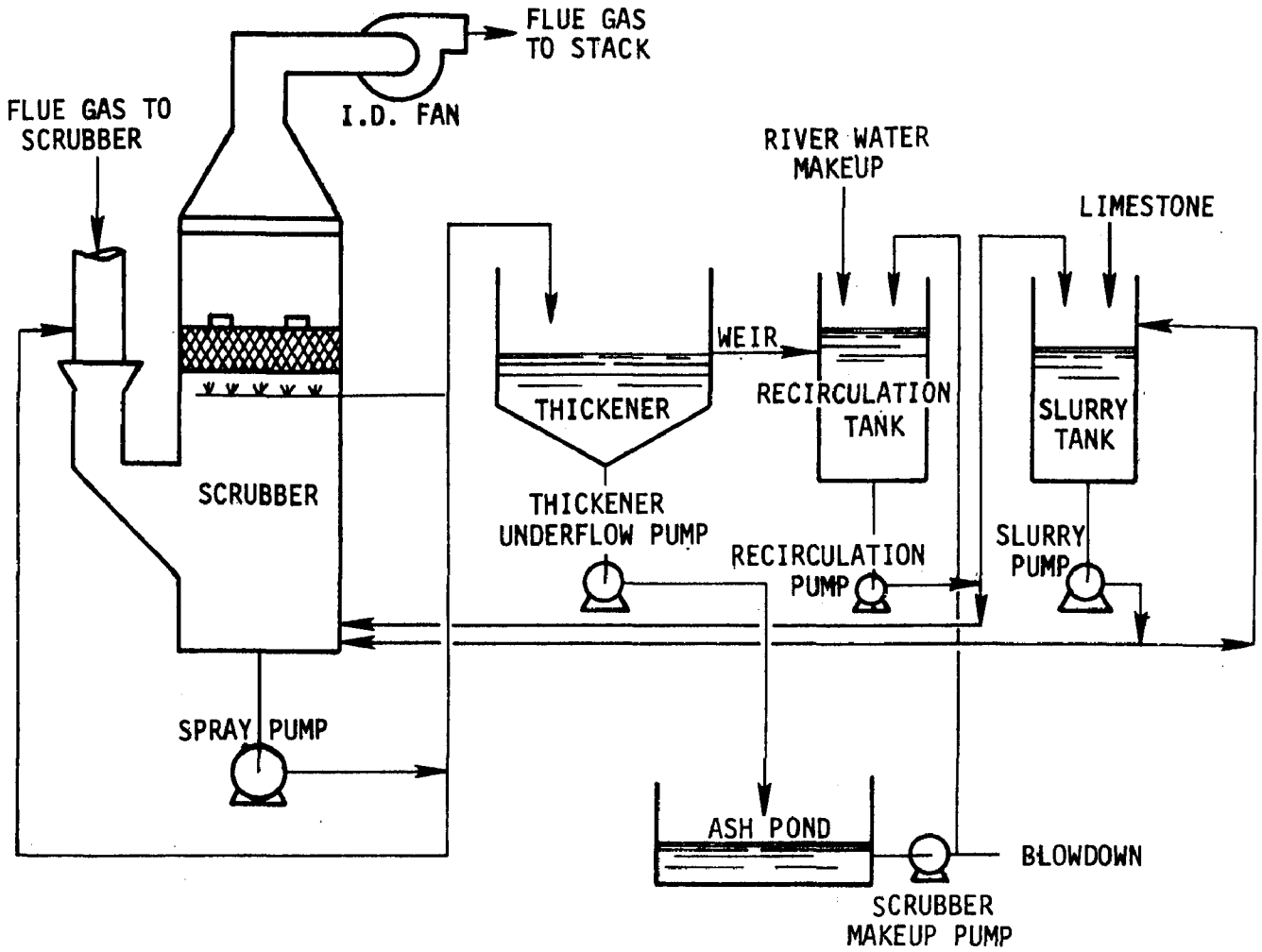

Figure 6. Simplified process flow diagram of the Sherburne scrubbing system.

TABLE 3. DESIGN, OPERATION, AND EMISSION DATA: SHERBURNE 1 AND 2

Total generating capacity, MW:	
Gross	1,440
Net without scrubbing	1,400
Net with scrubbing	1,360
Maximum coal consumption, Mg/h (tons/h)	369 (407)
Maximum heat input, GJ/h (10^6Btu/h)	7,128 (6,756)
Maximum flue gas rate, m^3/s (10^3acfm)	1,350 (2,859)
Flue gas temperature, °C (°F)	154 (310)
Unit heat rate, kJ/net kWh (Btu/net kWh)	10,510 (9,960)
Unit capacity factor, percent (1977)[a]	75.7
Emission controls:	
Particulate	Rod scrubber
Sulfur dioxide	Single-stage, marble-bed absorber
Nitrogen oxide	Furnace tangential firing system and overfire air
Particulate emission rate:	
Allowable, ng/J (lb/10^6Btu)	37 (0.087)
Actual, g/m^3 (gr/scf)[b]	0.09 (0.04)
Sulfur dioxide emission rate:	
Allowable, ng/J (lb/10^6Btu)	413 (0.96)
Actual, ppm[c]	300

[a] Based on the Sherburne 2 commercial operating date of April 1, 1977.

[b] Dry basis.

[c] Outlet value corresponds to an inlet value of 700 ppm sulfur dioxide.

SECTION 3

FLUE GAS DESULFURIZATION SYSTEM

BACKGROUND INFORMATION

Early in 1970, NSP began to plan for a major addition to its power generating capacity. At that time, NSP's peak electric demand was 3700 MW. Demand was expected to increase during the decade at an annual rate of 8 percent, and a peak demand of 5500 MW was projected for 1977. To select an appropriate site and develop guidelines for pollution control, NSP solicited public participation. A group called the Citizens Advisory Task Force, consisting primarily of representatives from environmental groups in Minnesota, was formed to represent the public interest in the choice of a site. The task force took under advisement four alternative plant sites and, after considerable study, recommended the Sherburne County one, even though NSP had favored a different location as its primary site. The task force also developed guidelines for pollution control and recommended that emissions of all pollutants be reduced to levels in accordance with the best available control technology. It also recommended that NSP provide space to accommodate future additions of pollution control equipment reflecting new technology and more stringent emission standards.

In 1971, NSP selected low-sulfur, western coal from southern Montana as the primary fuel for the Sherburne steam generators. This decision was based on the low-sulfur content of the coal and its cost, which was about the same as was paid for Illinois coals having more sulfur that were burned in some NSP plants. The selection of low-sulfur coal complicated the emission control strategy because of the difficulty of collecting fly ash with a

a high ash resistivity in ordinary electrostatic precipitators. Since the acquisition of a construction permit was contingent upon a commitment to remove sulfur dioxide, NSP elected to develop a wet scrubbing system to remove both particulate and sulfur dioxide. In addition, NSP wanted to purchase a complete system from the steam generator supplier. Combustion Engineering offered the marble-bed scrubber, which at that time was designed for simultaneous tail-end removal of both particulate and sulfur dioxide. Because of the scale and novelty of the application, the participants decided to conduct pilot and prototype tests of the scrubbing system to confirm its concept and design.

A laboratory demonstration program, using a 34 m^3/min (1200 cfm) pilot scrubber unit, was conducted from April 3 to April 10, 1972, at Combustion Engineering's Kreisinger Laboratory. Fly ash from Montana coal was provided by NSP. The total test time was 145 hours. Calcium sulfate levels in the slurry were controlled without liquid purge by maintaining a solids level of 7 percent in the slurry. The alkalinity of the fly ash and a 50 percent stoichiometric feed rate of commercial grade limestone combined to produce a sulfur dioxide removal of more than 50 percent. Removal efficiencies for both particulate and sulfur dioxide were in excess of the required levels.

A test program with a prototype scrubber unit was conducted from March 1973 to July 1974 at NSP's Black Dog generating plant near Minneapolis. The prototype unit was designed to treat a nominal gas flow of 370 m^3/min (13,000 acfm) at 77°C (170°F).* This rate represented approximately 5 percent of the flue gas from Black Dog 1, the generator on which the prototype was installed. The Black Dog 1 steam generator, also a Combustion Engineering unit, burned coal typical of the Sherburne coal during the course of the test. The vessels in the prototype unit were the same size as those planned for Sherburne, except in cross-sectional area. Major equipment items included a single-stage, marble-bed

*An electrical capacity of roughly 4 to 5 MW.

scrubber, pumps, valves, a thickener, a mist eliminator, a hot-water reheater, and a small concrete disposal pond. A simplified process flow diagram of the Black Dog prototype scrubber is provided in Figure 7.

The principal objectives of the Black Dog test program were to:

- Demonstrate the ability of alkaline fly ash alone, or alkaline fly ash and limestone, to achieve at least a 50 percent removal of sulfur dioxide.
- Demonstrate the guaranteed particulate outlet loading of 0.09 g/m^3 (0.04 gr/scf), dry basis.
- Demonstrate reliable and low maintenance operation.
- Determine optimum scrubber operating conditions, including requirements for instrumentation, control, and purge stream.
- Demonstrate reliable operation without the accumulation of solids (plugging and scaling) on scrubber internals.
- Demonstrate acceptable continuous operation over a 30-day period.

Soon after startup of the prototype, it became apparent that a particulate loading of 0.09 g/m^3 (0.04 gr/scf) in the discharge gas stream would be difficult to attain in a single marble-bed scrubber design. The best the prototype could achieve consistently was 1.4 g/m^3 (0.6 gr/scf), which was several orders of magnitude higher than the required emission limitation. Three methods for improving particulate removal were considered: (1) adding a second marble bed to the scrubber; (2) adding an electrostatic precipitator upstream of the scrubber, thereby also allowing scrubber bypass; and (3) adding or incorporating a high-energy scrubber upstream of the marble-bed scrubber. The last of these alternatives was chosen, and a rod scrubber, comprising two sets of adjustable rod decks in the throat area of a venturi, was attached to the marble-bed module.

Following the incorporation of the rod scrubber, the particulate removal efficiency of the Black Dog prototype improved

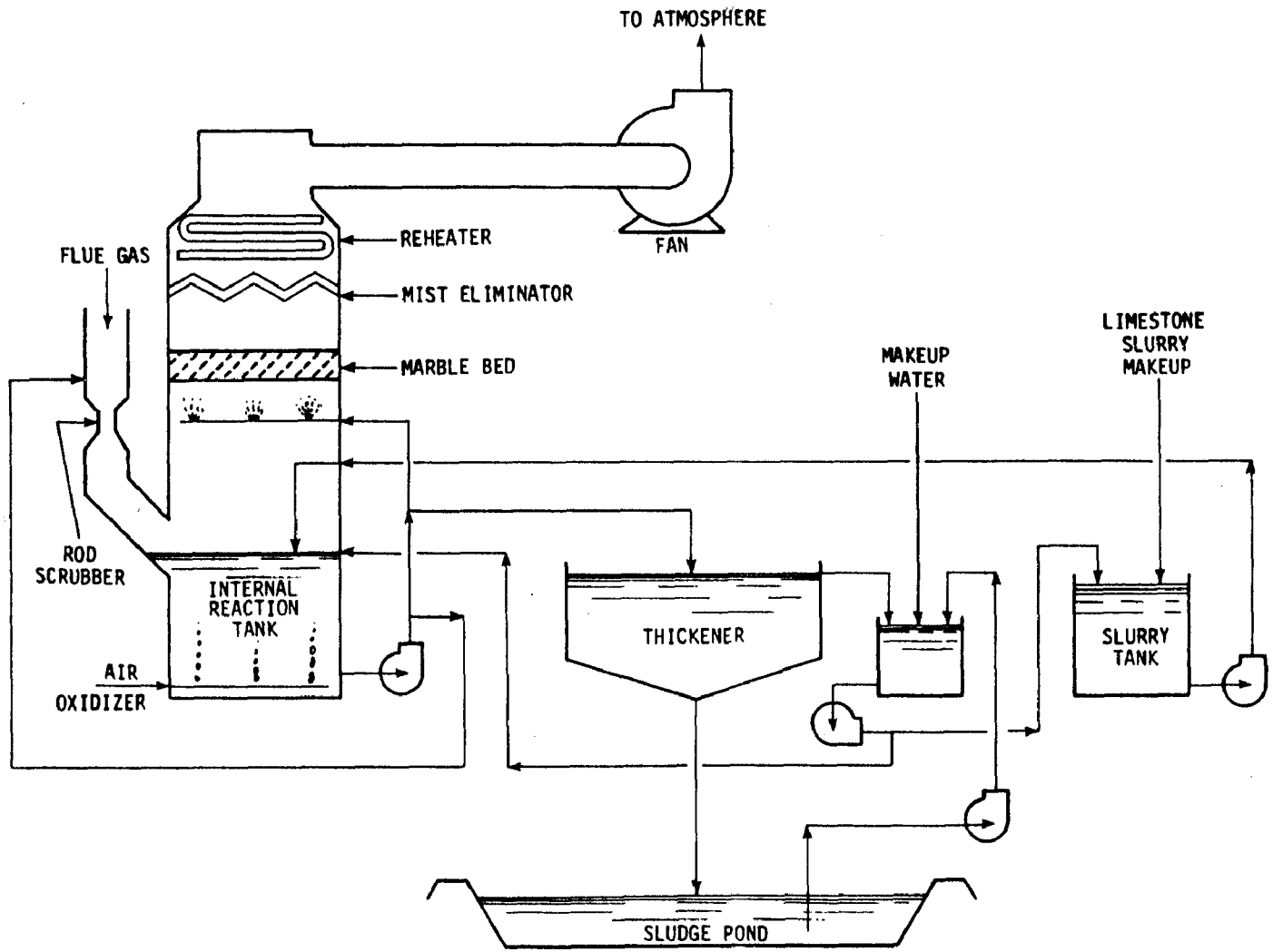

Figure 7. Simplified process flow diagram of the Black Dog prototype scrubber.

substantially and achieved the required level. The design modification, besides increasing the slurry recirculation rate and the solids content of the slurry, also reduced plugging and scaling in the scrubber. These problems had been encountered during early operation.

Performance tests were conducted during the Black Dog program to evaluate the feasibility and reliability of the design, and to measure removal efficiencies, reagent consumption, and power consumption. The major findings of the program are summarized as follows:

1. Incorporation of the rod scrubber increased the total pressure drop of the system from 1.5 kPa (6 in. H_2O) to 3 kPa (12 in. H_2O).

2. A series of tests was made in which the inlet sulfur dioxide and supplementary limestone were varied, while the input fly ash remained relatively constant. The sulfur dioxide was varied from 482 ppm to 919 ppm, and the limestone from 9 to 100 percent of stoichiometric. The sulfur dioxide removal efficiency ranged between 48 and 88 percent under these conditions. Required levels of sulfur dioxide removal were met with as little as 5 percent stoichiometric limestone added. The calcium in the fly ash played a major part in the removal of sulfur dioxide, representing 70 to 80 percent of the alkali reagent.

3. Chemical analysis after forced oxidation, provided by sparging air into the delay tank at 300 percent air stoichiometry, indicated that virtually all the sulfite was converted to sulfate. This benefited process chemistry and improved the quality of the sludge produced.

4. The use of cooling tower blowdown as the primary source of makeup water was shown to be feasible.

5. A 10 percent solids level in the slurry, 70 percent of which was fly ash and the remainder calcium solids, was sufficient to provide ample seed crystals and prevent scaling.

6. The level of supplementary limestone was reduced to achieve adequate sulfur dioxide removal and minimize scale

formation. The optimum level was found to be about 15 percent or less of stoichiometric.

7. A mist eliminator freeboard distance of approximately 4.5 meters (14 to 15 feet) was satisfactory for optimum mist entrainment separation.

8. Good performance was obtained with rubber-lined process equipment and fiberglass spray headers, and the slurry nozzles did not exhibit wear or deterioration.

Following the incorporation of the venturi scrubber plus some of the process and design modifications discussed above, the reliability of the Black Dog prototype improved dramatically. A demonstration test over a continuous period of 50 days was completed with a 99 percent availability. The Black Dog program was terminated in July 1974 when the final design configuration and operating parameters for the Sherburne scrubber systems had been determined.

PROCESS DESCRIPTION

The alkaline fly ash/limestone scrubbing systems installed on Sherburne 1 and 2 were designed and supplied by Combustion Engineering. Each system consists of 12 scrubber modules, 11 of which are required for full-load operation, to treat the total boiler flue gas stream of 1,350 m^3/s (2,859,000 acfm) at 154°C (310°F). The design removal efficiencies of the systems are 99 percent of the inlet particulate and 50 percent of the inlet sulfur dioxide when the boiler fires a coal with ash and sulfur contents of 9 percent and 0.8 percent, respectively. The scrubbing systems were installed as integral parts of the power generating complex. Duct work is arranged so that flue gas cannot bypass the scrubber modules.

The Sherburne scrubbing systems share common limestone handling, storage, and preparation equipment, as well as disposal facilities for flue gas cleaning wastes. The three basic operation

areas of the Sherburne scrubbing system--limestone handling, storage, and preparation; flue gas treatment; slurry recirculation and flue gas cleaning waste disposal--are described briefly in the following subsections.

Limestone Handling, Storage, and Preparation

The limestone for the scrubbing systems is handled by the coal unloading and transportation system. It is delivered to the plant as 1.9 by 0.6 cm (3/4 by 1/4 in.) rock, and contains a minimum of 95 percent calcium carbonate. Limestone is stored at ground level in a conical pile alongside the yard belt for recovery by a front-end loader.

Before it is milled in the wet ball mills, the limestone is stored in a 540-Mg (600-ton) surge hopper in the crusher building. The limestone is withdrawn from the surge hopper over weigh belts into two Allis-Chalmers wet ball mills. Each mill has a capacity of 22 Mg (24 tons) per hour. The mills are equipped with coarse and fine grind sections with classifiers. The product of the mill is a 60 percent solids slurry, which is transferred to a storage tank capable of holding a 7-hour mill output. The slurry in the storage tank is agitated by air to prevent hard settling.

Slurry is withdrawn from the storage tank as it is needed and is diluted with makeup water to form a 4 to 6 percent solids slurry, which is then transferred to a slurry tank provided for each system. It can then be transferred to the internal reaction tank of each scrubber module.

Flue Gas Treatment

The flue gas from the steam generator leaves the air preheaters at approximately 154°C (310°F) and enters the scrubbing system. The scrubber inlet duct work is designed to distribute the flue gas equally among the scrubber modules, and to maintain a high enough velocity to keep the particulate in suspension.

This is achieved by providing individual ducts with turning vanes at the inlet of each module.

After passing the inlet damper, the flue gas enters the rod scrubber. This is a rectangular-throat venturi section with two parallel rows of horizontal rods in the throat. The rods are perpendicular to the flue gas flow. A slurry spray, which is generated in the scrubber reaction tank and pumped to the first stage by the spray water pump, is introduced just above the rods. Some of the slurry is sprayed into the gas stream and the rest is sprayed on the walls of the venturi section to prevent deposit formation. The rods increase the velocity of the flue gas by reducing the cross-sectional area of the duct, causing the particulate and sulfur dioxide in the gas to be captured by the droplets from the slurry spray nozzles.

The flue gas, still containing a significant portion of the inlet sulfur dioxide and some particulate, then travels into the main part of the scrubber where it contacts the ladder vanes at the base of the marble bed. The vanes act as distributors for the flue gas, which is wetted by both the slurry on the bed and the slurry being sprayed to the bed by the underbed spray nozzles. As the flue gas passes through the marble bed, it is broken up and mixed with the slurry entering the bed.

The flue gas next passes through the mist elimination section to have the entrained moisture removed. The temperature of the gas at the mist eliminator exit is 55°C (131°F). To prevent condensation of the equilibrium moisture, the gas passes through a finned-tube reheater that increases the scrubbed gas temperature to about 77°C (171°F). The flue gas leaves the reheater and travels through the outlet duct work to the induced-draft fans; from there, it passes through two outlet breeching sections to flues in the stack (one flue per unit).

A simplified diagram of a Sherburne scrubber module is provided in Figure 8.

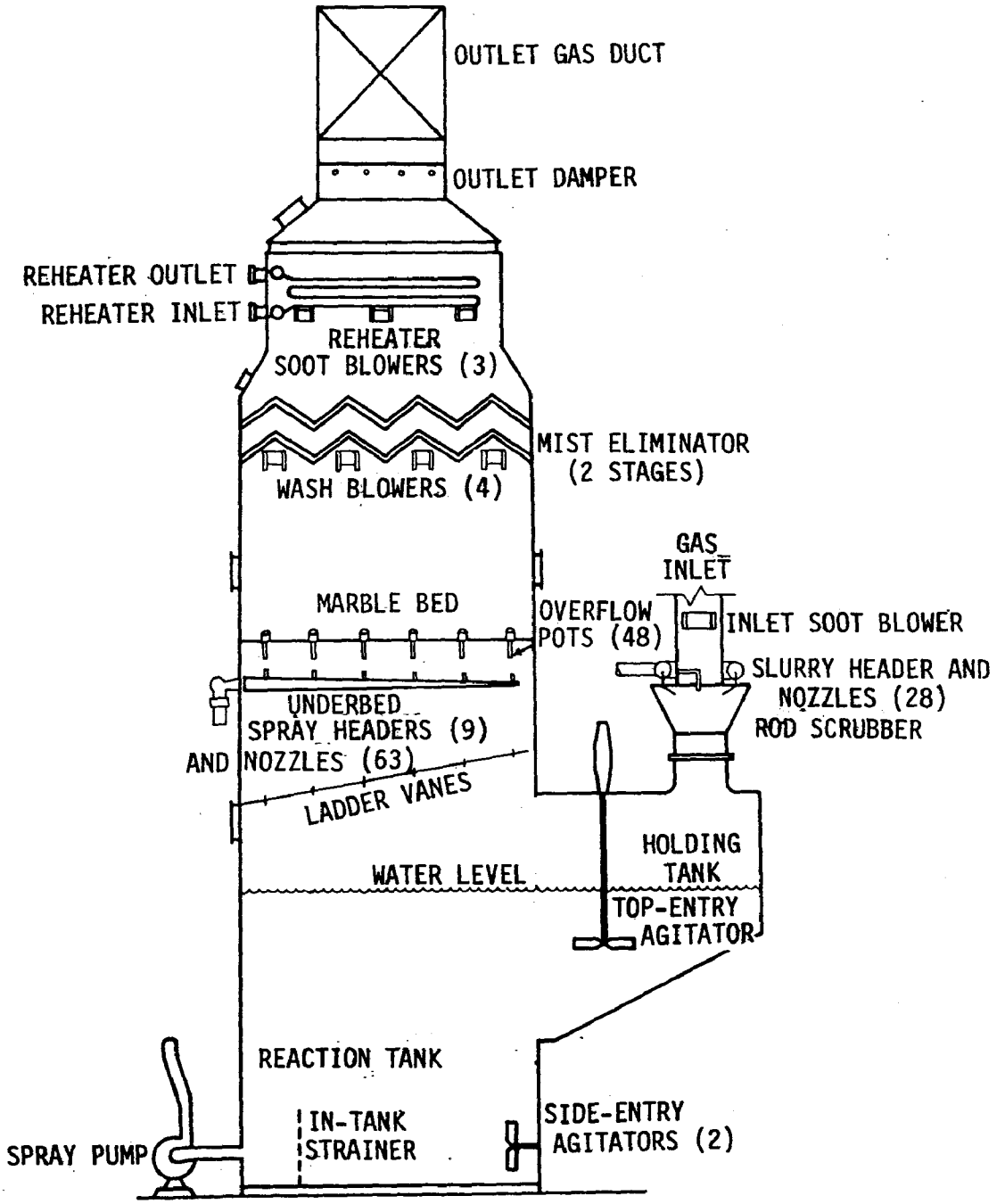

Figure 8. Simplified diagram of Sherburne scrubber module.

Slurry Recirculation and Disposal of Flue Gas Cleaning Wastes

Each scrubber module is equipped with an internal recirculation tank that collects the scrubbing slurry sprayed into the rod scrubber and marble-bed sections of the scrubber module. The tank is functionally divided into two compartments: the holding tank and the reaction tank. The holding tank is a triangular compartment located beneath the rod scrubber and adjoined directly to the marble-bed module. It collects, via gravity feed, the slurry sprayed into the rod scrubber venturi. The reaction tank is a rectangular compartment located directly below the marble bed. It has a capacity of 250,000 liters (66,000 gallons). This tank collects the slurry sprayed into the marble-bed section via a drainage system consisting of 48 overflow drain pots located on top of the marble bed.

The holding tank is equipped with one vertical-entry agitator, and the reaction tank with two side-entry agitators. The agitators continually mix the slurry, which contains calcium salts, collected fly ash, dissolved ions, and limestone. The limestone prepared in the milling system is continuously delivered to the reaction tank as a 4 percent solids slurry. The slurry is recycled to the rod scrubber and marble-bed sections of the scrubber module by a single spray water pump that delivers it to each of these sections, where it collects the fly ash and the sulfur dioxide from the flue gas and returns them to the reaction tank.

A close-up view of the holding and reaction tank configuration is provided in Figure 9.

The percentage of solids in the slurry is controlled by drawing off a bleed stream from the spray water pump discharge and sending it to the thickener. This flow is automatically controlled to maintain the slurry solids level at 10 percent. The bleed stream is discharged to the thickener where the solids are concentrated and pumped to the fly ash pond. The decanted liquid at the top of the thickener is returned to the scrubber

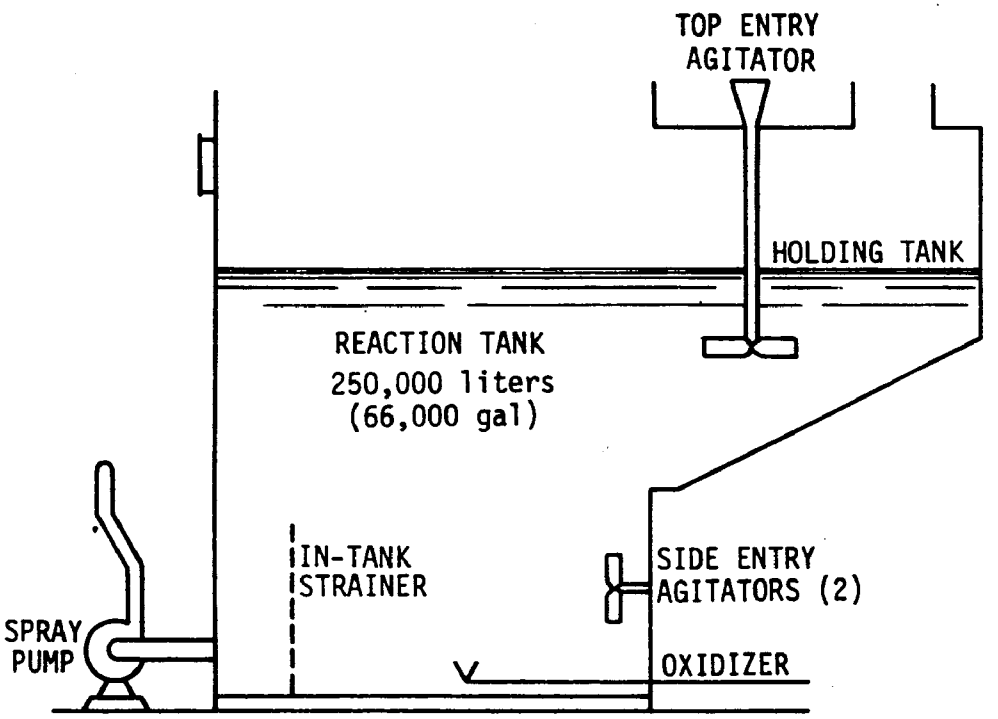

Figure 9. Close-up view of the Sherburne scrubber module holding tank and reaction tank configuration.

recirculation tank for use as makeup water to the modules and mist eliminator wash water. The slurry in the fly ash pond is allowed to settle, with the solids remaining in the pond and the liquid being collected and returned to the scrubber recirculation tank.

PROCESS DESIGN

Fuel

The scrubbing systems were designed to process flue gas resulting from the combustion of pulverized coal in two conventional steam generators. Table 4 presents the fuel specifications and consumption rate of the performance coal.

TABLE 4. SPECIFICATIONS AND CONSUMPTION RATE OF PERFORMANCE COAL

Heating value, kJ/kg (Btu/lb)	19,300 (8,300)
Ash, percent	9.0
Moisture, percent	25.0
Sulfur, percent	0.8
Maximum firing rate, Mg/h per unit (tons/h per unit)	372 (410)

Ash

The collected fly ash imparts a substantial amount of alkalinity to the scrubbing slurry, providing the major source of reagent for sulfur dioxide removal. Calcium oxide, magnesium oxide, and sodium oxide, which account for the bulk of this alkalinity, constitute 21 percent of the fly ash. Ash composition and concentration data are presented in Table 5.

Rod scrubber

The first scrubbing stage of the scrubber module provides primary control of inlet particulate and also removes a substantial amount of the inlet sulfur dioxide. This stage, which is attached to the side of the reaction tank, consists of an inlet gas section, a skirt section, a venturi rod section,

TABLE 5. ASH COMPOSITION AND CONCENTRATION DATA

Component	Weight percent
Calcium oxide	17.0
Magnesium oxide	4.0
Sodium oxide	0.3
Silicon oxide	32.0
Aluminum oxide	21.0
Titanium oxide	0.5
Ferric oxide	6.0
Potassium oxide	0.3
Phosphorous pentoxide	0.5
Sulfur trioxide	16.5
Undetermined	1.9
Total	100.0

and a holding tank. The inlet gas section connects the flue gas duct to the first scrubbing stage. This section contains the inlet soot blower that removes solids accumulated at the wet-dry interface. The skirt section, which connects the inlet gas section to the venturi, houses the first-stage spray nozzles. Twenty-eight nozzles penetrate the top perimeter of the skirt section and spray slurry in a cocurrent fashion into the incoming gas stream. In the throat area, the venturi houses two rows of rods that are used to contact the flue gas and the slurry. The rods in each deck are staggered: an upper row is welded to bars that are permanently fixed in the duct, and a bottom row can be adjusted by moving the deck up or down with a manual scissor jack. The rods are assembled in five sections, each measuring 1 m by 3 m (3 ft by 10 ft). The slurry holding tank is connected to the reaction tank, and houses the top-entry agitator that is included in each module. Table 6 summarizes the design parameters and operating conditions for the major components of the first scrubbing stage. Figure 10 shows a diagram of the first scrubbing stage.

Marble-bed Scrubber

The second scrubbing stage of the scrubber module provides additional particulate and sulfur dioxide removal. This stage, housed in the vertical scrubber module, includes a single marble bed, underbed sprays, a drainage system, and a reaction tank. The marble bed is a perforated plate upon which glass spheres are packed to an average depth of 10 cm (4 in.). Slurry is applied to the bed by spray nozzles attached to nine underbed spray headers, which receive part of the recycled slurry from the spray pump discharge. Slurry drainage is provided by 48 drain pots located on the marble bed. These overflow pots are domed, weir-type drainage devices that are evenly spaced throughout the bed. The slurry collected by the drain pots flows down into the reaction tank below the marble bed. The internal reaction tank houses the two side-entry agitators provided for each module.

TABLE 6. FIRST SCRUBBING STAGE DESIGN PARAMETERS AND OPERATING CONDITIONS

Number	12
Type	Rectangular, venturi rod scrubber
Major components	Gas inlet, skirt, venturi, rod decks, spray nozzles, and holding tank
Dimensions:	
Gas inlet (length x width), m(ft)	0.9 x 6.5 (3.0 x 25.5)
Rods (outer diameter), cm(in.)	6.4 (2.5)
Materials of construction:	
Gas inlet	Carbon steel[a]
Skirt	316L SS
Venturi	316L SS
Rods	316L SS[b]
Spray nozzles	Ceramic
Holding tank	Carbon steel[a]
Number of rod decks	2
Number of rod sections per scrubber	5
Number of spray headers	2
Number of spray nozzles	28
Flue gas volume, m^3/s (acfm)	123 (259,900)
Flue gas temperature, °C (°F)	154 (310)
Flue gas velocity, m/s (ft/s)	15 (50)
Liquid recirculation rate, liters/s (gpm)	223 (3,540)
Liquid-to-gas ratio (L/G), liters/m^3 (gal/10^3 acf)	1.8 (14)

[a] 0.64 mm (0.25 in.) plate.

[b] Schedule 40 pipe, 91 cm (36 in.) in length.

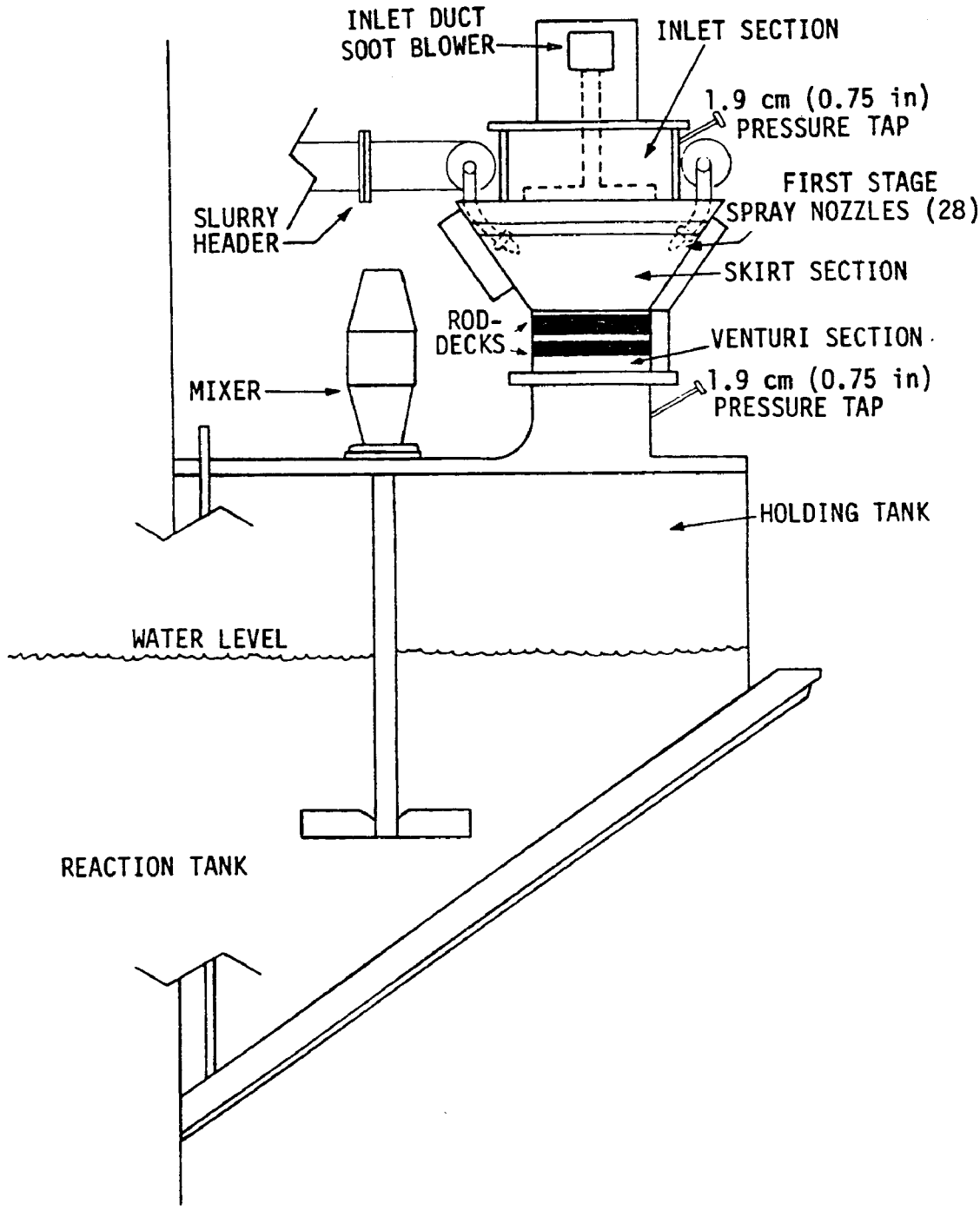

Figure 10. Diagram of Sherburne's first scrubbing stage.

Each tank is also equipped with an in-tank strainer, consisting of a large, perforated, semicircular plate installed around the suction side of the spray water pump. Each strainer is equipped with an automatic water washer that backwashes the strainer and prevents it from becoming plugged. Table 7 summarizes the design parameters and operating conditions for the major components of the marble-bed scrubbing stage. Figure 8, which provides a simplified diagram of the scrubber module, also illustrates the general arrangement of the marble bed.

Mist Eliminator

Each module is equipped with a mist eliminator, which is placed horizontal to the flue gas stream. Two stages of three-pass chevron vanes are located 3.2 m (10.5 ft) above the marble bed. Each of these stages is washed for 2 minutes every 24 hours with a high-pressure spray of liquor. The wash liquor is a blend of thickener overflow and cooling tower blowdown. Four retractable, water-blower washers are provided for each mist eliminator. Table 8 summarizes the design parameters and operating conditions. Figure 8, which provides a simplified diagram of the scrubber module, also illustrates the general arrangement of the mist eliminator.

Reheaters

Each module is equipped with a reheater, which is placed approximately 3 m (10 ft) above the mist eliminator. The reheater is an in-line, hot-water heat exchanger consisting of 45 circumferential finned tubes, arranged in a staggered, parallel fashion, to allow four tube passes through the gas stream. The temperature of the scrubbed gas stream is raised from 55°C to 77°C (131°F to 171°F) by the reheaters. This heating is designed to prevent condensation and resultant corrosion of downstream equipment (ducts, fans, stack), suppress plume visibility, and enhance plume rise and pollutant dispersion. Table 9 summarizes reheater design parameters and operating conditions. Figure 8, which

TABLE 7. MARBLE-BED SCRUBBING STAGE DESIGN PARAMETERS AND OPERATING CONDITIONS

Number	12
Type	Vertical, rectangular, single-stage, marble-bed scrubber
Major components	Perforated plate, marble-bed packing, drain pots, spray headers and nozzles, and reaction tank
Dimensions:	
Perforated plate (length x width), m (ft)	5.6 x 8.1 (18.4 x 26.5)
Marble bed (depth), cm (in.)	10 (4)
Marbles (diameter), cm (in.)	2.1 (0.8)
Area per drain pot, m^2 (ft^2)[a]	0.9 (10)
Materials of construction:	
Scrubber shell	Carbon steel[b]
Scrubber liner	Flake fiberglass[c]
Perforated plate[d]	316L SS
Marble packing	Glass
Drain pots	FRP (pots), 316L SS (domes)
Spray headers	FRP
Spray nozzles	Ceramic
Reaction tank[e]	Carbon steel
Number of marble beds	1
Number of spray headers	9
Number of spray nozzles	63
Flue gas volume, m^3/s (acfm)	94 (200,000)
Flue gas temperature, °C (°F)	54 (130)
Flue gas velocity, m/s (ft/s)	2 (7)
Liquid recirculation rate, liters/s (gpm)	120 (1900)
Liquid-to-gas ratio (L/G), liters/m^3 (gal/10^3 acf)	1.3 (9.5)

[a] Each pot drains approximately 0.9 m^2 (10 ft^2) of marble bed area.

[b] 6.4 mm (0.25 in.) plate.

[c] Ceilcote flake fiberglass lining is applied to the scrubber shell internal from the slurry level of the reaction tank to the reheater elevation.

[d] 316L SS construction. The plate has an open area of about 40 percent provided by 9.5-mm (3/8-in.) holes located in 1.9-cm (3/4-in.) centers.

[e] 1.6-cm (5/8-in.) plate.

TABLE 8. MIST ELIMINATOR DESIGN PARAMETERS AND OPERATING CONDITIONS

Total number	24
Number per module	1
Type	Chevron
Configuration (relative to gas flow)	Horizontal
Materials of construction	FRP
Number of stages	2
Number of passes per stage	3
Number of vane assemblies	148
Shape	Z-shaped sections
Distance between stages, cm (in.)	10 (4)
Distance above bed, m (ft)	3.2 (10.5)
Wash system:	
Water source	Blend of thickener overflow and cooling tower blowdown
Washing devices (number and type)	4 retractable, soot-blower-type washers
Wash direction	Vertical, upwards rotatable 180 deg (1st stage), Vertical, upwards rotatable 360 deg (2nd stage)
Frequency	Intermittent - 2 minutes every 24 h
Pressure, kPa (psig)	930 - 1140 (120 - 150)

TABLE 9. REHEATER DESIGN PARAMETERS AND OPERATING CONDITIONS

Total number	24
Number per module	1
Type	Indirect, in-line
Location	3 m (10 ft) above mist eliminator
Heating medium:	
Source	Hot water from deaerator feed tank
Inlet temperature, °C (°F)	176 (350)
Outlet temperature, °C (°F)	110 (230)
Flow rate, liters/s (gpm)	145 (2300)
Heat exchanger:	
Tube size (outer diameter), cm (in.)	4.5 (1.75)
Tube type	Circumferential finned tube
Number of tubes	45
Number of passes	4
Tube arrangement	Staggered
Materials of construction	Carbon steel
Self cleaning:	
Type	Soot blowers
Number	3
Frequency	Once per shift
Reheater duty, MJ/h (10^6 Btu/h)	139 (132)
ΔT, °C (°F)	22 (40)

provides a simplified diagram of the scrubber module, also illustrates the general arrangement of the reheater.

Fans

Four induced-draft fans, which operate in tandem with two half-capacity forced-draft fans to maintain furnace draft, are located downstream of each scrubbing system. Scrubbed gas is discharged to a plenum that serves the induced-draft fans. Each fan is an axial flow, 30 percent capacity unit that is equipped with a discharge shutoff and inlet control damper. Table 10 summarizes the design and operating parameters.

Draft Losses

Table 11 summarizes the draft losses that are encountered in the inlet and discharge ducts to the scrubbing system, as well as within the scrubbing system itself.

Pumps

Each system is equipped with 19 major pumps, performing the following functions: reheat medium feed (2 flue gas reheat water pumps); makeup water feed (1 scrubber makeup water pump); makeup water transfer (2 scrubber recirculation pumps); slurry recirculation (12 scrubber spray pumps); and discharge to the pond (2 scrubber sludge pumps). Table 12 summarizes pump design parameters and operating conditions.

Separation of Solids and Liquids

Each scrubbing system is equipped with one thickener to concentrate the solids before discharge to the fly ash pond. The thickener overflow is returned to the scrubber recirculation tank for further use as makeup water, flush water, and mist eliminator wash. Table 13 summarizes thickener design parameters and operating conditions.

TABLE 10. INDUCED-DRAFT FAN DESIGN PARAMETERS AND OPERATING CONDITIONS

Total number	8
Number per unit	4
Manufacturer	Green Fuel Economizer
Service	Dry, reheated gas
Diameter, m (ft)	3.6 (12)
Specifications:	
Type	Axial flow, variable drive, inlet damper control
Rating, kW (hp)	4500 (6000)
Total pressure drop, kPa (in. H_2O)[a]	11 (44)
Scrubber pressure drop, kPa (in. H_2O)[b]	6 (24)
Gas capacity, m^3/s (acfm)	331 (702,000)
Gas temperature, °C (°F)	77 (171)
Materials of construction	Carbon steel
Energy requirement, MW[c]	28

[a] Maximum design pressure drop for entire unit.

[b] Maximum design pressure drop for entire scrubbing system.

[c] Power requirement for scrubbing system is maximum design pressure drop.

TABLE 11. SHERBURNE SCRUBBING SYSTEM DRAFT LOSSES

Component	kPa (in. H_2O)
Rod scrubber	3.25 (13.0)
Marble bed	1.50 (6.0)
Mist eliminator	0.125 (0.5)
Reheater	0.125 (0.5)
Ducts and dampers	0.50 (2.0)
Total	5.50 (22.0)

TABLE 12. PUMP DESIGN PARAMETERS AND OPERATING CONDITIONS

Number	Service	Manufacturer	Type	Capacity		Materials of construction
				Flow, liter/s (gpm)	Head, meters (ft)	
24	Spray	Worthington	Centrifugal, overhead motors, V-belt	353 (5600)	30 (110)	Ni-Hard
24	Effluent bleed	Worthington	Centrifugal	9.5 (150)	24 (80)	Rubber lined
4	Scrubber re-circulation	Worthington	Centrifugal	126 (2000)	84 (275)	Cast iron
2	Makeup water	FMC	Centrifugal	189 (3000)	38 (125)	Ni-Hard
4	Reheat water	Ingersoll-Rand	Centrifugal	145 (2300)	43 (140)	Ni-Hard
2	Discharge to, fly ash pond	Warman	Horizontal centrifugal	35 (560)	100 (330)	Ni-Hard

TABLE 13. THICKENER DESIGN PARAMETERS AND OPERATING CONDITIONS

Total number	2
Number per system	1
Type	Center rake drive
Manufacturer	Dorr-Oliver
Dimensions:	
Diameter, m (ft)	50 (160)
Height, m (ft)	3 (10)
Slurry solids, percent:	
Inlet	10
Outlet	25-30

Limestone Storage and Preparation

One limestone storage and preparation facility supplies the reagent needs for both scrubbing systems. Two wet ball mills grind the limestone rock to an 80 percent minus 200 mesh powder, which is ultimately diluted to a 4 percent solids slurry and transferred to each system. Table 14 summarizes design parameters and operating conditions of the reagent preparation facility.

WASTE DISPOSAL

Four impoundment areas--the bottom ash pond, fly ash pond, recycle basin, and holding basin--function as the primary solid and liquid waste disposal system. Bottom ash from the steam generators is disposed of in a 620,000 m^3 (500 acre-feet) diked impoundment pond. Flue gas cleaning wastes from the scrubber systems are disposed of in a 30,800,000 m^3 (2500 acre-feet) diked impoundment pond. Both of these ponds are about 15 m (50 ft) deep, are clay lined at the bottom, and contain a clay core in the dikes to minimize seepage. Flue gas cleaning wastes are discharged to the fly ash pond at a rate of 38 Mg (42 tons) of

TABLE 14. LIMESTONE STORAGE AND PREPARATION DESIGN PARAMETERS AND OPERATING CONDITIONS

Limestone:	
Rock size, cm (in.)	1.9 x 0.6 (3/4 x 1/4)
Supplier location	Davenport, Iowa
Transportation method	Barge/truck
Calcium carbonate, percent	95
Storage bins:	
Number	1
Capacity, tons (Mg)	540 (600)
Wet ball mills:	
Number	2
Capacity, Mg (tons)/h	22 (24)
Manufacturer	Allis Chalmers
Product slurry, percent solids	60
Classifier, type	Sieve bend
Mill effluent:	
Slurry solids, percent	4
Point of addition	Reaction tank

solids per hour at full load. The pond has a 7- to 9-year service life based upon current waste discharge levels. An additional area of about 0.2 km^2 (50 acres) is available for expansion.

The recycle and holding basins receive cooling tower blowdown, overflow from the ash ponds, storm runoff water, and makeup water from the river. The recycle basin is a clay-lined, earthen containment that has a surge volume capacity of 34 million liters (9 million gallons). Water collected in the basins is recycled back to the plant for further use in the scrubbing system and is the bottom ash and mill-rejects sluicing system. Some of the collected water can be discharged to the Mississippi River after a 24-hour retention in the holding basin. This discharge stream is monitored and regulated within limits established by permits from regulatory agencies.

The general arrangement of the impoundment areas has been presented in Figure 2, which provides the site plan of the Sherburne generating plant. A simplified flow diagram of the water network for the scrubber system is provided in Figure 11.

PROCESS CHEMISTRY

Collected fly ash and slurried limestone provide the materials for the chemical reactions in the Sherburne scrubbing process. The fly ash, which has a 17 percent composition of calcium oxide (lime), is collected primarily in the rod scrubbing stage. The limestone, which has a 95 percent composition of calcium carbonate, is ground in the wet ball mills and delivered to the reaction tank for each module as a 4 percent slurry. The details of the complex chemical reactions are beyond the scope of this discussion, but the principal mechanisms are described below.

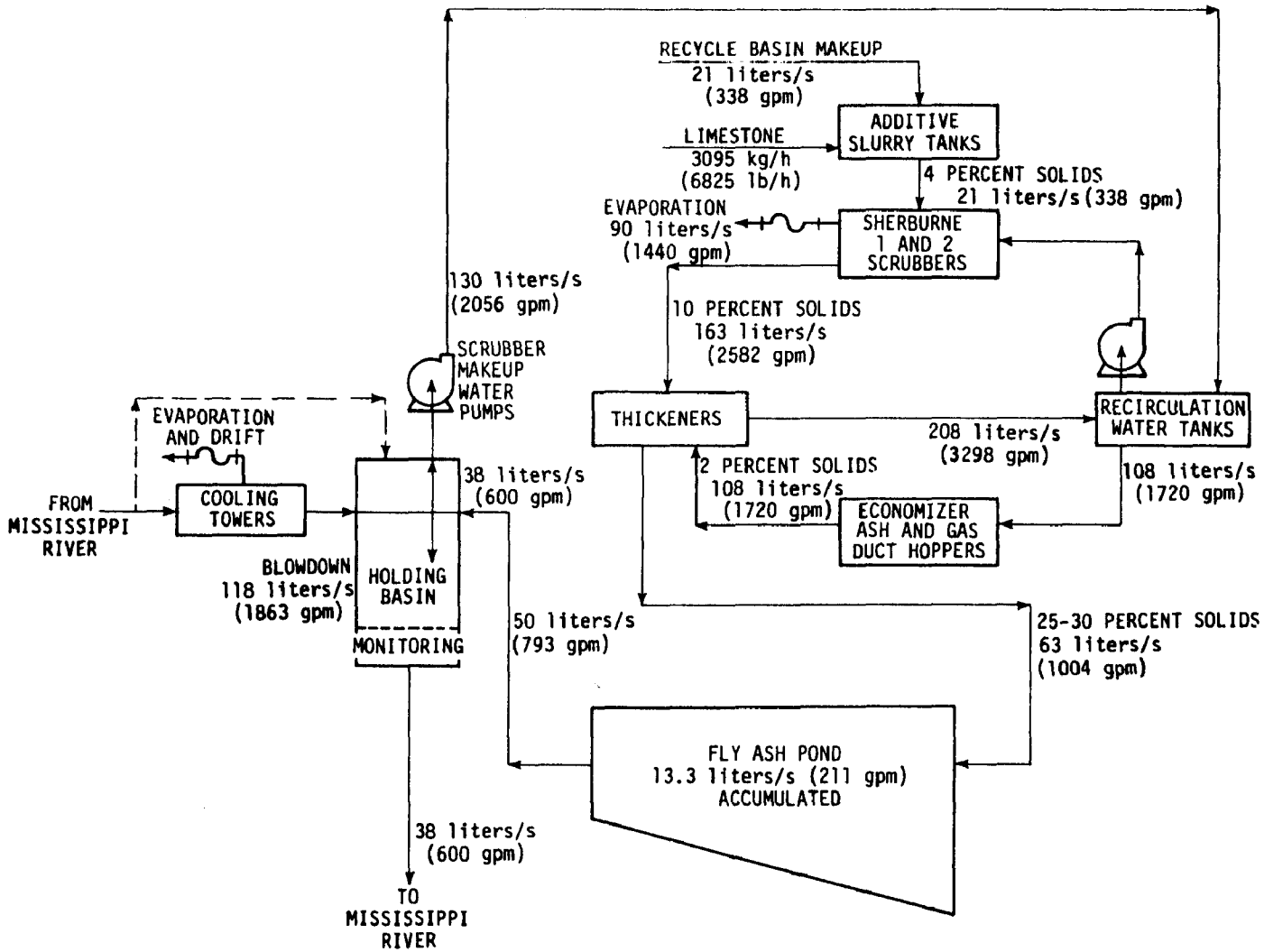

Figure 11. Simplified flow diagram and typical flow rates of Sherburne scrubbing system water network.

Gas-phase Absorption

The first step in the wet-phase absorption of sulfur dioxide from the flue gas stream is diffusion from gas to liquid. Once absorbed into the liquid phase, the sulfur dioxide, which is an acidic anhydride, reacts readily with water to form sulfurous acid.

1. $SO_2 \uparrow \rightleftharpoons SO_2(aq.)$
2. $SO_2(aq.) + H_2O \rightleftharpoons H_2SO_3$

In addition, some sulfur trioxide is formed from the further oxidation of sulfur dioxide in the flue gas stream.

3. $2SO_2 \uparrow + O_2 \uparrow \rightleftharpoons 2SO_3 \uparrow$

This species, like sulfur dioxide, is an acidic anhydride that reacts readily with water to form sulfuric acid when absorbed in the liquid phase.

4. $SO_3 \uparrow \rightleftharpoons SO_3(aq.)$
5. $SO_3(aq.) + H_2O \rightleftharpoons H_2SO_4$

The sulfurous and sulfuric acids are polyprotic species that dissociate into a number of ionic species:

6. $H_2SO_3 \rightleftharpoons H^+ + HSO_3^-$
7. $HSO_3^- \rightleftharpoons H^+ + SO_3^=$
8. $H_2SO_4 \rightleftharpoons H^+ + HSO_4^-$
9. $HSO_4^- \rightleftharpoons H^+ + SO_4^=$

In a reaction that is analogous to the gas-phase oxidation of sulfur dioxide to sulfur trioxide, the sulfite ions undergo a chemical reaction promoted by the dissolved oxygen present in the scrubbing solution.

10. $2SO_3^{=} + O_{2(aq.)} \rightleftharpoons 2SO_4^{=}$

Lime Scrubbing

The fly ash collected in the rod scrubber venturi is discharged to the holding tank where the reactive lime dissolves in the scrubbing slurry:

11. $CaO + H_2O \rightleftharpoons Ca(OH)_2$

12. $Ca(OH)_2 \rightleftharpoons Ca^{++} + 2OH^-$

The calcium cations that are formed react with the sulfite and bisulfite ions from the sulfur dioxide absorption.

13. $Ca^{++} + SO_3^{=} \rightleftharpoons CaSO_3$

14. $Ca^{++} + 2HSO_3^- \rightleftharpoons Ca(HSO_3)_2$

The calcium sulfite formed is capable of further reacting with sulfur dioxide ions in the following manner:

15. $CaSO_3 + H^+ + HSO_3^- \rightleftharpoons Ca(HSO_3)_2$

The soluble calcium bisulfite formed is neutralized with hydrated calcium oxide (reactions 11 and 12) in the reaction tank, producing calcium sulfite, which removes additional sulfur dioxide (reaction 15) and also accounts for some of the waste product species purged from the slurry circuit.

16. $Ca(HSO_3)_2 + Ca^{++} + 2OH^- \rightleftharpoons 2CaSO_3 + 2H_2O$

Limestone Scrubbing

The calcium carbonate that is present in the 4-percent solids limestone slurry delivered to the reaction tank for each scrubber partially dissolves and ionizes as follows:

17. $CaCO_3 \rightleftharpoons CaCO_{3(aq.)}$

18. $CaCO_{3(aq.)} \rightleftharpoons Ca^{++} + CO_3^{=}$

19. $CO_3^{=} + H^+ \rightleftharpoons HCO_3^-$

The calcium cations formed react with the sulfite and bisulfite ions formed from sulfur dioxide absorption.

20. $Ca^{++} + SO_3^{=} \rightleftharpoons CaSO_3$

21. $Ca^{++} + 2HSO_3^{-} \rightleftharpoons Ca(HSO_3)_2$

The calcium sulfite formed further reacts with sulfur dioxide ions, forming additional bisulfite that is neutralized in the reaction tank with dissolved calcium carbonate.

22. $CaSO_3 + H^{+} + HSO_3^{-} \rightleftharpoons Ca(HSO_3)_2$

23. $Ca(HSO_3)_2 + Ca^{++} + CO_3^{=} \rightleftharpoons 2CaSO_3 + 2H^{+} + CO_3^{=}$

The calcium sulfite produced in reaction 22 is capable of removing additional sulfur dioxide and also accounts for some of the waste products purged from the slurry circuit.

Sulfate Formation

Sulfate is generated in the scrubbing process by the gas-phase and liquid-phase oxidation reactions cited above (reactions 3 and 10). Approximately 60 percent of all the sulfur captured by the scrubbers is converted to sulfate. Virtually all of the remaining sulfite produced in the scrubbing process is also converted to sulfate by forced oxidation in the reaction tanks. Air is sparged into each tank at 350 percent air stoichiometry.

24. $2SO_3^{=} + O_{2(aq.)} \rightleftharpoons 2SO_4^{=}$

The sulfate reacts with the calcium cations, producing calcium sulfate, which precipitates out as insoluble calcium sulfate dihydrate (gypsum). The gypsum, along with the other waste solids (fly ash, unreacted limestone, calcium sulfite), is concentrated in the thickener and discharged to the fly ash pond.

25. $Ca^{++} + SO_4^{=} \rightleftharpoons CaSO_4$

26. $CaSO_4 + 2H_2O \rightleftharpoons CaSO_4 \cdot 2H_2O \downarrow$

Not all of the sulfur dioxide captured in the scrubbers leaves as gypsum. Some of the calcium sulfite precipitates out as calcium

sulfite hemihydrate. This material is also ultimately disposed of in the fly ash pond.

27. $CaSO_3 + 1/2H_2O \rightleftharpoons CaSO_3 \cdot 1/2H_2O \downarrow$

PROCESS CONTROL

A dedicated computer monitoring and control system is used for process control at the Sherburne scrubber plant. This system represents a refinement over the original concept, which relied on only enough parameters to schedule the modules in and out of service to meet load requirements. The old system, based in a separate control room for scrubber operations, monitored 3 analog and 26 digital inputs with no visual display. The refined system is based in the main control room and is interfaced with the boiler controls. The computer now monitors 134 analog and 48 digital points, and displays on a cathode ray tube. All routine operations are performed by the computer and logic network.

Process control is maintained by regulating reagent feed as a function of slurry pH, regulating waste discharge as a function of slurry solids, and regulating water feed as a function of liquid levels in the tanks. The efficiency of particulate removal is maintained by controlling gas-side pressure drop across the venturi rod decks. A 3 kPa (12 in. H_2O) pressure drop across the rod decks is maintained by raising or lowering the lower rod deck via a manual scissor jack. By regulating the vertical space between the rods, gas-side pressure drop is controlled, which, in turn, affects the amount of particulate removed by the scrubber.

The efficiency of sulfur dioxide removal is maintained by controlling slurry pH levels. The scrubbing slurry pH is measured with a Universal Interloc pH sensor, using a fiberglass flow-through chamber that receives slurry from a slipstream tapped off the spray pump. Based on these measurements, the rate of limestone feed into the reaction tanks is manually controlled. The

pH control range is 5.0 to 5.5. As the pH swings above or below this range, the amount of fresh limestone slurry is manually reduced or increased. In this way, optimum removal efficiency can be attained while avoiding the scaling or plugging that results from loss of chemical control. Limestone, added to the slurry circuit to supplement the alkalinity of the fly ash collected in the venturi, insures a minimum sulfur dioxide removal efficiency of 50 percent while preventing the corrosion and scaling that come from pH swings. The additive slurry feed to each reaction tank is controlled by an Invalco valve with a Norbide valve plug and seat (boron carbide ceramic) for abrasion resistance.

To control the level of slurry solids circulated through the scrubber system, a spent slurry bleed stream is removed from each reaction tank via an effluent pumping service that takes its suction from the reaction tank. One effluent bleed pump is provided for each reaction tank. The spent slurry is discharged at a rate of 9.5 liters/s (150 gpm) per module and is sent to the thickener via the slurry transfer tank. This bleed stream is automatically controlled by a Texas nuclear density meter (standard clamp-on type) working in conjunction with a Leeds and Northrup controller. A meter inside the reaction tank of each module monitors the solids level of slurry circulating through it. When the level exceeds 10 percent a control valve is activated that allows a bleed stream to flow to the thickener until the proper level is reestablished. Two control valves are placed in series in the bleed line, the first manually set and the second controlled. The control is not critical, however, and may be made manual.

The maintenance of a 10 percent solids level in the scrubbing slurry is vital to the process chemistry. The level of sulfate in the slurry is controlled by selective desupersaturation in the reaction tank and continual bleed from the spray pump discharge to the thickener. Desupersaturation of sulfate requires the presence of enough calcium sulfate solids in the

slurry to act as seed crystals, promoting crystal growth of calcium sulfate in the process. This process is aided by the use of a forced oxidation system that sparges air into the reaction tanks, oxidizing all the remaining sulfite* to sulfate. The sulfate then crystallizes on the seed crystals and is removed from the system for disposal in the fly-ash pond. As a consequence, a safe sulfite level is maintained in the slurry being returned to the scrubbers; and critical supersaturation, which can produce uncontrolled gypsum scale formation on equipment internals, does not occur.† The amount of calcium sulfate seed crystals is 2 to 3 percent of the 10 percent solids level in the slurry, which is sufficient to control sulfate saturation levels.

A water balance system controls the water returned from the holding and recycle basins to maintain the proper liquid levels in the recirculation and makeup tanks. Bubble-tube level controllers are used in these tanks to control the flow of makeup water to the tanks. Flow rates in all slurry lines are measured by magnetic flowmeters (Foxboro).

---

* Approximately 60 percent of the sulfite present in the scrubber system is converted to sulfate by natural oxidation. Nearly all the rest is converted to sulfate by forced oxidation.

† The ratio of the products of the activity coefficients of calcium and sulfate ions to the solubility product of calcium sulfate is a measure of relative saturation. Thus, when this ratio is less than one subsaturation occurs. $\frac{A_{Ca^{++}} A_{SO_4^{=}}}{Ksp\ CaSO_4} < 1$

Saturation and supersaturation occur when this ratio equals or exceeds one. $\frac{A_{Ca^{++}} A_{SO_4^{=}}}{Ksp\ CaSO_4} \geq 1$

Heterogeneous crystallization, which is the precursor of uncontrolled gypsum scaling, becomes critical when relative upersaturation reaches 1.4 to 1.5.

Sulfur dioxide concentrations in the flue gas are measured by DuPont ultraviolet analyzers (Photometric 460). Each scrubbing system is equipped with four analyzers, each having a four-stream sample train. The monitors analyze the sulfur dioxide inlet and outlet values for each module, the overall content of each generating unit, and the total flow to the stack.

SECTION 4

FGD SYSTEM PERFORMANCE

BACKGROUND INFORMATION

The Sherburne scrubbing systems are the largest and among the more sophisticated applications of limestone scrubbing technology in the world today. They also represent a second-generation design philosophy, in that the basic Combustion Engineering marble-bed scrubber design was modified after extensive pilot and prototype plant testing to include such features as a venturi rod scrubber in the first stage, forced oxidation, and the use of the alkalinity of the collected fly ash to remove a major portion of the sulfur dioxide. These modifications allowed the systems to achieve design guarantees of 99 percent particulate removal, 50 percent sulfur dioxide removal, and 90 percent availability. In addition to the Black Dog prototype program, the final design reflected Combustion Engineering's experience in developing scrubber technology at the Lawrence Energy Center, Kansas Power and Light.

The operation of the scrubber systems have been very successful up to this time. All design guarantees have been met or bettered, with system availability at a high and steadily improving level since initial operation. The success has, in part, been due to the continual efforts by NSP and Combustion Engineering to improve scrubber performance through design and operation modifications. In an effort to refine the process design and operating parameters for Sherburne 3, these participants are also conducting a module isolation program.

This section summarizes the operating history and performance of the scrubbing systems, including removal efficiencies and dependability; problems encountered and their solutions; current research and development (R&D); and the future initiatives that are planned.

OPERATING HISTORY AND PERFORMANCE

Sherburne 1 was first fired in early 1976 and was placed in service on March 26, 1976. Commercial operation of the unit began on May 1, 1976. Sherburne 2 was first fired in late 1976 and was placed in service on January 25, 1977. Commercial operation began on April 1, 1977. The scrubbing systems were started up and were certified commercial at the same time as their respective power generating units.

For Sherburne 1, system availability averaged 85 percent during the first 3 months of operation after commercial startup. During the remaining months of 1976, however, availability rose to an average of 94 percent, giving a 1976 average of 90 percent. In 1977, the annual average availability for the Sherburne 1 scrubbing system was 93 percent. Through September of 1978 the availability has averaged 93 percent. This record shows that the availability of the Sherburne 1 system has steadily improved since commercial startup.

For Sherburne 2, scrubbing system availability averaged 93 percent during the first 9 months of operation (April through December 1977). Through September of 1978, the availability has averaged 94 percent. As with Sherburne 1, the availability of this system has improved since commercial startup. The slightly better availability of the scrubbing system on Sherburne 2 in the entire period since commercial startup (94 percent for Sherburne 2 versus 92 percent for Sherburne 1), may be attributed to the design and operating experience gained by the utility and system supplier with Sherburne 1.

Another index by which to measure the performance of the scrubber systems is the kilowatt-hour (kWh) output of the generating units. Since the systems are integral parts of the power generating complex and cannot be bypassed, their availability is a limiting factor in kWh output. The average capacity factor for Sherburne 1 for its 29 months of commercial operation (May 1976 through September 1978) was 72.7 percent. The average capacity factor for Sherburne 2 for its 18 months of commercial operation (April 1977 through September 1978) was 78.8 percent. This translates into a station capacity factor of 75.8 percent, which closely corresponds to NSP's capacity estimates of 80 percent for the 1976 to 1980 period. The monthly kWh outputs for both units have tended to increase,* and the output of Sherburne 2 has tended to exceed that of Sherburne 1. These trends reflect the design and operating experience that has been gained.

Several performance tests, and the data from continuous monitoring, have demonstrated that removal efficiencies meet the standards of emission regulations. The scrubbing systems have typically been removing about 99 percent of the inlet particulate matter [6.9 g/m^3 (3.0 gr/scf) inlet, 0.09 g/m^3 (0.04 gr/scf) outlet]† and 55 to 60 percent of the inlet sulfur dioxide (700 ppm inlet, 300 ppm outlet). The only compliance problems have been with opacity requirements. Even when the systems have been meeting or exceeding design particulate control levels, opacity has typically been in the range of 40 to 45 percent, or about twice the regulatory limitation. Tables 15 and 16 summarize the performance of the Sherburne units, including scrubbing system availabilities, individual module operabilities, boiler hours, unit kWh outputs, and capacity factors.

---

* The monthly output of Sherburne 2 dropped off for the first three quarters of 1978 because of outages and overhauls.

† Dry basis.

TABLE 15. SHERBURNE 1 PERFORMANCE SUMMARY: MAY 1976 TO SEPTEMBER 1978

Month/year	Unit output, MWh	Unit capacity factor	Boiler operation, h	Total system availability, percent	Module operability, percent											
					101	102	103	104	105	106	107	108	109	110	111	112
May 1976	318,050	0.64	657	86	62	83	81	59	72	90	57	69	60	75	72	67
Jun. 1976	372,450	0.75	688	84												
Jul. 1976	269,700	0.54	512	84	80	62	71	81	80	68	81	75	79	63	91	69
Aug. 1976	421,110	0.85	705	94	46	93	51	84	83	76	71	84	81	76	87	91
Sept. 1976	349,470	0.70	566	95	87	90	93	76	76	79	85	79	85	80	92	96
Oct. 1976	385,610	0.68	606	93	97	84	96	96	95	30	74	76	91	81	100	87
Nov. 1976	454,010	0.95	720	93	83	80	87	79	92	80	93	89	69	78	73	93
Dec. 1976	480,920	0.97	722	95	88	84	87	80	71	97	91	95	94	88	73	75
Jan. 1977	386,060	0.78	607	90	94	75	99	76	96	77	70	92	81	40	75	95
Feb. 1977	411,900	0.80	609	91	89	99	64	96	64	99	81	62	98	93	98	61
Mar. 1977	510,650	1.0	743	95	47	92	95	93	93	95	88	93	95	83	78	72
Apr. 1977	460,100	0.93	718	95	84	65	92	95	96	62	73	91	58	93	90	88
May 1977	195,790	0.39	312	92	96	48	92	87	95	96	81	98	96	78	35	87
Jun. 1977	127,290	0.26	248	92	76	77	75	75	30	87	58	44	61	80	0	83
Jul. 1977	476,490	0.96	736	97	93	66	92	90	92	94	91	17	94	83	78	83
Aug. 1977	357,380	0.72	640	95	85	89	66	55	81	90	83	79	72	85	90	66
Sept. 1977	416,430	0.84	686	95	86	85	88	92	88	62	83	90	86	77	77	82
Oct. 1977	360,850	0.73	609	88	70	81	95	97	63	35	87	99	96	39	58	96
Nov. 1977	412,360	0.83	705	92	77	91	42	86	79	82	87	91	89	89	92	52
Dec. 1977	325,050	0.65	557	93	97	90	95	94	71	92	26	67	96	98	95	90
Jan. 1978	374,290	0.75	648	92	83	63	88	73	84	84	92	64	91	80	88	82
Feb. 1978	366,200	0.74	636	92	0	93	92	89	74	85	89	88	76	86	88	87
Mar. 1978	423,220	0.85	676	92	71	83	64	89	90	83	62	89	97	71	79	90
Apr. 1978	464,520	0.94	713	95	92	87	87	44	81	85	91	86	92	91	87	52
May 1978	380,010	0.77	635	95	61	86	85	86	89	64	62	83	82	71	87	79
Jun. 1978	414,670	0.84	717	93	50	84	85	85	62	78	55	83	88	82	72	95
Jul. 1978	394,510	0.79	694	95	82	76	71	74	75	52	75	63	62	72	66	73
Aug. 1978	416,930	0.84	742	91	64	65	73	63	65	80	81	73	63	73	64	83
Sept. 1978	185,740	0.37	357	97	89	62	77	77	58	82	68	68	80	80	55	75

TABLE 16. SHERBURNE 2 PERFORMANCE SUMMARY: APRIL 1977 TO SEPTEMBER 1978

Month/year	Unit output, MWh	Unit capacity factor	Boiler operation, h	Total system availability, percent	Module operability, percent											
					201	202	203	204	205	206	207	208	209	210	211	212
Apr. 1977	442,170	0.89	697	92	0	95	93	87	83	84	94	74	91	87	85	86
May 1977	421,020	0.85	644	91	33	100	44	95	94	100	76	98	94	92	91	98
Jun. 1977	423,680	0.85	720	96	92	76	78	79	89	74	67	88	88	78	45	85
Jul. 1977	382,890	0.77	602	97	96	87	86	97	96	88	88	95	57	93	94	87
Aug. 1977	366,500	0.74	675	93	88	75	67	82	84	35	81	80	56	79	71	33
Sept. 1977	423,280	0.85	717	94	89	61	82	90	81	82	52	88	56	87	73	86
Oct. 1977	449,140	0.90	684	95	98	89	87	86	62	99	98	93	96	96	70	81
Nov. 1977	435,360	0.88	715	91	85	93	68	80	93	73	75	66	94	77	91	65
Dec. 1977	443,500	0.89	733	93	53	93	94	81	89	95	93	83	62	82	90	92
Jan. 1978	387,190	0.78	682	92	91	75	64	72	74	67	91	88	77	72	73	84
Feb. 1978	367,080	0.74	620	92	83	85	55	91	89	76	71	89	85	81	97	60
Mar. 1978	483,750	0.97	744	97	82	92	90	83	78	85	91	62	83	78	88	89
Apr. 1978	436,420	0.88	719	92	70	82	90	84	91	83	84	86	78	90	67	85
May 1978	70,070	0.14	120	91	97	94	80	90	90	89	90	92	28	91	78	14
Jun. 1978	326,780	0.66	572	95	77	46	41	67	62	62	72	78	60	62	76	75
Jul. 1978	393,610	0.79	697	95	87	89	62	93	90	64	86	67	64	81	73	71
Aug. 1978	384,400	0.77	695	93	88	100	48	79	81	72	64	87	54	76	80	71
Sept. 1978	396,500	0.80	720	96	72	82	70	61	74	64	82	72	75	78	82	68

PROBLEMS AND SOLUTIONS

The performance of the scrubber systems has exceeded minimum design expectations and has steadily improved over the course of the operating period (up to September 1978). This improvement has come from the accumulation of operating experience, the resolution of specific problems, and design modifications undertaken to resolve or prevent operating problems. Many problems have been encountered, and some continue to reduce system availability. A discussion of the major problems and solutions, and modifications that have resulted, are discussed by equipment category in the following paragraphs.

Strainers, Comminuters, and Perforated Plates

Original scrubber equipment included slurry line strainers, comminuters, and perforated plates that were designed to remove large chunks and solid particles from the slurry circuit to prevent nozzle plugging. The arrangement of this equipment for each module is illustrated in Figure 12. The failure of the equipment to perform its function has contributed to the most significant problem affecting system availability, nozzle plugging.

The original strainers were Zurn duplex units, located on the discharge of the slurry spray pumps, that were designed to remove solid particles larger than 6.4 mm (0.25 in.) in diameter. In operation, however, frequent episodes of strainer plugging, mechanical failures, and inability to remove large particles caused severe nozzle plugging and low system availability. The duplex design also resulted in impractical operation and maintenance requirements. After extensive and futile efforts to remedy these problems, the strainers were abandoned in favor of a new design.

The reaction tanks were originally equipped with a comminuter and internal perforated plate to capture and grind the large chunks of solids that accumulated in the slurry circuit. The equipment proved to be unnecessary because large chunks are not normally generated within the module. The plate also tended

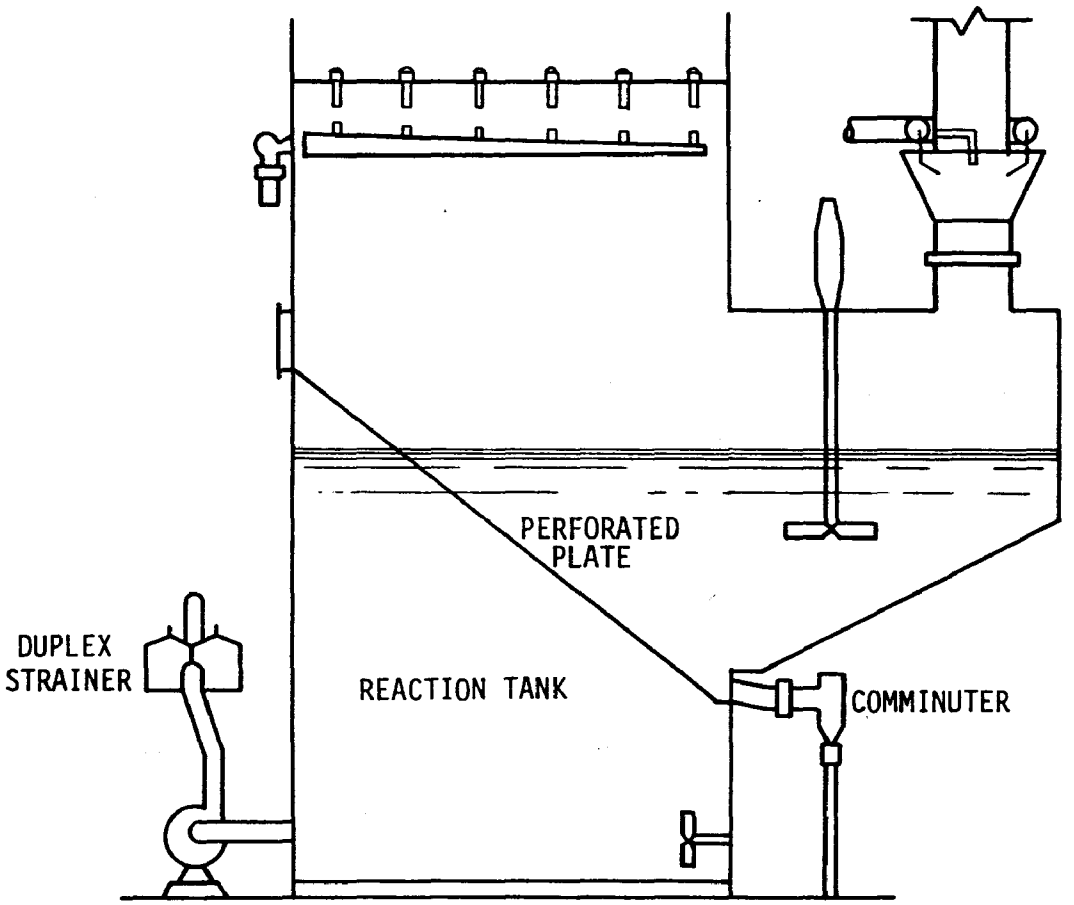

Figure 12. Original arrangement of Sherburne scrubber module featuring the duplex strainer, perforated plate, and comminuter.

to be a convenient site for scale formation, which eventually plugged it. These experiences, along with the decision to design a new strainer, led to the removal of the comminuters and the lower portion of the perforated plate.

Combustion Engineering installed new in-tank strainers, consisting of large, semicircular perforated plates fitted around the suction side of the spray pumps. Each strainer is equipped with an oscillating and retractable wash lance for periodic backwashing. Figure 13 shows a diagram of the redesigned in-tank strainer and wash lance arrangement.

One strainer, constructed of carbon steel, was installed in September 1976, and resulted in an immediate improvement. All the modules were equipped with the new design by March 1977. The remedy has not, however, been a complete success; nozzle plugging persists, caused primarily by scale formation that is sheared off and carried to the nozzles from the strainer and piping headers. Further, the tendency of the strainers to plug activates the wash lance; and repeated, inefficient backwashing has caused strainer material failures (erosion of carbon steel plate) and dilution of slurry solids, adversely affecting process chemistry. The first problem has been corrected by using 316L stainless steel perforated plates. The second is being corrected by devising a wash lance with a different supply pressure and capacity.

Rod Scrubbers

Erosion of the rod scrubber housing and rods has been a continual problem. The housing erosion has been traced to the direct impingement of slurry from the spray nozzles. Sacrificial wear plates of 316L stainless steel construction have been fastened to the inside of the converging section of the venturi. The 316L stainless steel rods exhibited severe wear and failure after 8600 hours of operation. As a temporary solution to this problem, sacrificial wear plates of stainless steel angle iron were welded to the bottom rod deck while other materials were considered to replace the stainless steel rods. The cause of the premature rod

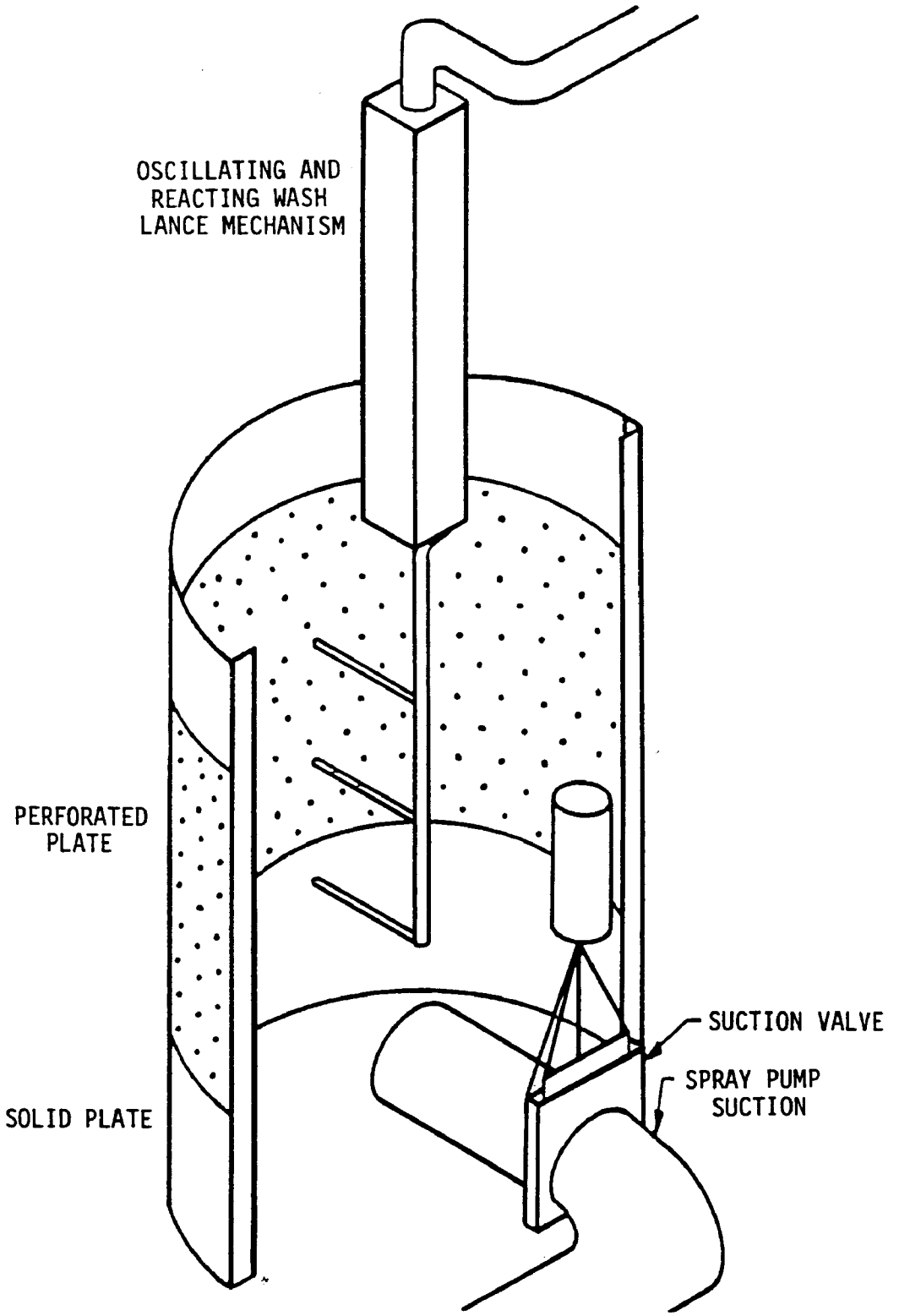

Figure 13. Redesigned in-tank strainer and wash-lance arrangement.

wear has been linked to the high pressure drops across the rod scrubbing stage. This stage was originally designed to operate at a pressure drop of 2.1 kPa (8.5 in. H_2O). To meet particulate guarantees and lessen the opacity of stack emissions, the pressure drop was increased to 3.3kPa (13 in. H_2O).

Pumps

The Ni-Hard impellers and wear plates of the original slurry spray pumps [Worthington, 353 liters/s (5600 gpm)] fail and must be inspected and/or replaced every 4000 to 6000 hours. On selected modules, NSP is evaluating the use of 28 percent chrome-iron internals and rubber-lined internals for the spray pumps. The evaluation is still in progress, as several modules on both systems are being refitted with rubber-lined, higher flowrate pumps for testing.

Piping

The slurry recirculation and effluent bleed-off piping is rubber lined up to the entry into the spray headers (Hetron FRP). Failures have been numerous: the rubber is sheared off in chunks by the abrasive slurry and is carried to the nozzles and spray headers. Piping design errors--too many reducers and sharp bends--create part of the problem by causing accelerated wear and failure at these points. The user first tried to solve the problem by removing the lining, but this produced accelerated wear and erosion of the unprotected carbon steel piping. The performance of FRP, stainless steel, and rubber-lined spool pieces are currently being evaluated.

Numerous failures have also occurred in the thickened slurry underflow piping. The original fiberglass piping has been replaced with Ni-Hard piping. The mist eliminator wash lances, which are retractable, and water-blower washers are also constructed of fiberglass; and NSP is evaluating a stainless steel construction for this application.

Spray Nozzles

Material failures and modifications have affected the arrangement and construction of the spray nozzles in the rod scrubber. The nozzles were originally designed to extend into the gas stream to ensure proper spray distribution and to minimize the buildup of deposits on the rods. The nozzles themselves, however, provided convenient sites for solids deposition, and had to be replaced with a new design that did not extend into the gas stream; but this modification resulted in improper spray distribution and subsequent buildup on the rods. New nozzles, designed to cover the rod decks adequately and yet not extend into the gas stream, have been installed and are functioning properly.

Nozzles constructed of Nordell (a proprietary plastic) and carbon steel orifices were originally installed in the slurry recirculation lines of the modules. These items failed after a short time and were replaced with ceramic nozzles and orifices. Although initial performance after this change was encouraging, the nozzles eventually failed due to erosion in the tangential cone-forming chamber. Different nozzle types have been substituted for evaluation.

Scrubber Lining

The main body of the marble-bed scrubber module is lined with a flake fiberglass material (Ceilcote) that has been troweled on the carbon steel shell from the slurry level to the reheat section. Numerous failures of this coating, ranging from pinholes to chunks falling off, have been encountered in Sherburne 2's modules. Since this has been encountered only in Sherburne 2, the problem is believed to stem from improper application. The manufacturer has repaired these liners at its own expense.

The sidewalls above the slurry level in the venturi area have been eroded by slurry cascading down from the rods and impinging on the sloped surfaces. Failure of the flake fiberglass in this area led to the addition of 316L stainless steel wear plates.

Reheater

Some minor material failures in the reheater were observed during the early stages of operation. This was not the result of external or internal corrosion but external erosion caused by initial weld failures aggravated by washing after the initial failure. A straightening bar, which had been causing weld failures by adding undue stress, was removed. No failures have occurred since this modification.

Thickeners and Sludge Disposal

The slurry thickening and sludge disposal system has had several problems since startup. During the winter of 1976-1977, for example, the rake drive on the Sherburne 1 thickener kicked out on torque overload. Although the situation was detected immediately, the rake could not be restarted, and the entire thickener filled with sludge. Slurry from both units was then temporarily piped to one thickener (Sherburne 2 was not in commercial service at the time), which was able to accommodate the extra volume with a minimal loss in efficiency.

Solids are thickened in a ratio of 2.5:1. The thickeners were designed for an inlet of 10 percent solids, an outlet of 25 to 30 percent solids, and zero percent solids in the overflow. While the scrubber effluent bleed pumps discharge at 10 percent solids, the thickener inlet is diluted to an average inlet of less than 5 percent solids because of sluice down from the economizer ash hoppers. The thickener bottoms are about 35 percent solids, and overflow is about 1 percent. No flocculants are required.

Other problems have included plugging in the sludge pump suction piping and valves, plugging in the dead-leg pipes, failures and freezing in the sludge transport lines because of hydraulic and drainage problems, and electrical malfunctions of valve operators. A complete design review was performed and the following modifications have been or are being made:

- Modify and relocate thickener sludge pump discharge piping.
- Install slower operators on selected valves in sludge piping to reduce water hammer.
- Install larger pumps and redesign piping in scrubber pump house.
- Level the sludge lines to fly ash pond.
- Install surge restraints (accumulators) on sludge lines.
- Crosstie slurry inlets to thickeners, to allow either unit to discharge into either thickener.

Research and Development, and Future Initiatives

Northern States Power and Combustion Engineering are cooperating in a scrubber improvement program that encompasses two primary objectives: optimization of the operation of the Sherburne 1 and 2 scrubber systems, and development of the process design and operating parameters of scrubbing systems for Sherburne 3. Specific goals included in the first objective are:

- Increase particulate and sulfur dioxide removal efficiencies.
- Reduce manpower and operating costs. At the present time, 54 persons are employed to operate and maintain the systems. The instrument technician crews (4) and cleaning crews (21) have been unexpectedly large.
- Develop a more efficient and durable rod scrubber section.
- Improve control applications. The user has already installed and activated a dedicated computer monitoring and control system (see Section 3).

Several specific equipment modifications are being implemented to meet the goals mentioned above.

- Installation of a separate effluent bleed-off pump for each module, to replace the present procedure of bleeding off the slurry spray discharge line.

- Modification of the rod scrubber section, including a different configuration (materials and design) and larger rods [11.4 cm (4.5 in.) outer diameter].

- Continuation of the testing of different materials for the rods, pumps, piping, and nozzles.

Module 101 of Sherburne 1 has been modified for the research program to develop process design and operating parameters for Sherburne 3. Specific objectives and equipment modifications include:

- Removal of the marble bed and conversion to a spray tower design.

- Operating the rod scrubber at a pressure drop of 1.3 to 6.3 kPa (5 to 25 in. H_2O).

- Modification of the rod decks to use an 18 cm (7 in.) outer-diameter rod in a slightly different configuration.

- Incorporation of a bulk entrainment separator before the mist eliminator to improve particulate removal. A wash tray will also be added, upstream of the mist eliminator, to test its effect on mist eliminator cleanliness.

- Effect of L/G on removal efficiencies. The L/G for Module 101 will be doubled by coupling in the slurry spray pump and piping from another module for a short period of time to determine the effect on the removal of sulfur dioxide and, especially, particulate.

Table 17 summarizes the Sherburne 3 emission control system design.

TABLE 17. SUMMARY OF SHERBURNE 3 EMISSION CONTROL SYSTEM

Capacity, MW (gross)	860
Emission controls:	
Particulate	Rod scrubber
Sulfur dioxide	Spray tower absorber
Process	Alkaline fly ash/limestone
Supplier	Combustion Engineering
Number of modules	8 (1 spare)
Module design	Vertical rod scrubber and spray tower absorber
Current status	Letter of intent signed
Commercial startup Unit 3	May 1984

SECTION 5

FGD ECONOMICS

INTRODUCTION

The cost of FGD systems for the control of sulfur dioxide emissions is an area of intense interest and substantial controversy. For this reason, reported and adjusted economic data have been incorporated into this report.

The rationale for including adjusted costs stems from the difficulty of comparing the costs that are reported. Many of the capital and operating costs reported for operational FGD systems are site sensitive and involve different FGD battery limits and expenditures made in different years. To accommodate these differences, the cost data for the systems were analyzed and adjusted to produce accurate and comparable data for the sulfur dioxide portion of the emission control system.

APPROACH

NSP was forwarded a cost form containing all the Sherburne cost information that was available in the PEDCo files, with the request that the utility verify the data and fill in missing information. A followup visit was then arranged to assist in data acquisition and to see that the information was complete and reliable.

The sole intent of the adjusting procedure was to establish accurate costs of FGD systems on a common basis, not to critique the design or reasonableness of the costs reported by the utility. Adjustments focused primarily on the following items:

- Capital costs were adjusted to July 1, 1977, dollars using the Chemical Engineering Index. Capital costs, represented in dollars/kilowatt ($/kW), were expressed in terms of gross megawatts (MW).

- Gross unit capacity was used to express all FGD capital expenditures because the capital requirement of an FGD system depends on actual boiler size before derating for auxiliary and air quality control power requirements.

- Particulate control costs were deducted in an effort to estimate the incremental cost of sulfur dioxide control.

- Capital costs associated with the modification or installation of equipment that is not part of the FGD system but is needed for its proper functioning were included (e.g., stack lining, modification to existing duct work or fans).

- Indirect charges were adjusted to provide adequate funds for engineering, field expenses, legal expenses, insurance, interest during construction, allowance for startup, taxes, and contingencies.

- Annual costs, represented in mills/kilowatt-hour (mills/kWh), were expressed in terms of net megawatts (MW).

- Net unit capacity was used to express all FGD annual expenditures because the annual cost requirement of an FGD system depends on the actual amount of kilowatt-hours (kWh) produced by the unit after derating for auxiliary and air quality control power requirements.

- Annual costs were adjusted to a common capacity factor (65 percent).

- Replacement power costs were not included.

- Sludge disposal costs were adjusted to reflect the costs of sulfur dioxide waste disposal only (i.e., excluding fly ash disposal).

- A 30-year life was assumed for all process and economic considerations.

DESCRIPTION OF COST ELEMENTS

Capital costs consist of direct, indirect, contingency, and other capital costs. Direct costs include the "bought-out" cost of the equipment, of installation, and of site development. Indirect costs include interest during construction, contractor's fees and expenses, engineering expenses, legal expenses, taxes, insurance expenses, allowance for startup and shakedown, and spares. Contingency costs include those resulting from malfunctions, equipment alterations, and similar unforeseen sources. Other capital costs include the nondepreciable items of land and working capital.

Annual costs consist of direct, fixed, and overhead costs. Direct costs include the costs of raw materials, utilities, operating labor and supervision, and maintenance and repair. Fixed costs include depreciation, interim replacement expenses, insurance costs, taxes, and interest on borrowed capital. Overhead costs include those of plant and payroll expenses.

RESULTS

The complete results of the capital and annual cost analysis for Sherburne 1 and 2 are presented in Appendix C of this report. The reported and adjusted capital cost data are summarized in the following paragraphs.

Reported and Adjusted Capital and Annual Costs

The reported capital and annual costs provided by the utility are summarized in Tables 18 and 19. The total reported capital cost of both scrubber systems is $69,064,040, which is equivalent to $47.96/kW (gross). The annual cost of both systems is $15,014,800, which is equivalent to 1.99 mills/kWh (net).

The calculated adjusted capital and annual costs are summarized in Tables 20 and 21. The total adjusted capital cost of both systems is $101,579,000, which is equivalent to $70.54/kW (gross). The annual adjusted cost of both systems is $18,836,800, which is equivalent to 2.77 mills/kWh.

TABLE 18. SHERBURNE 1 AND 2
REPORTED CAPITAL COSTS
(dollars)

Scrubber modules and ancillary equipment	60,000,000
Induced-draft fans	302,000
Reheat	675,652
Thickening and sludge disposal	9,525,000
In-tank strainers	119,040
Total	69,064,040

TABLE 19. SHERBURNE 1 AND 2
REPORTED ANNUAL COSTS (1977)
(dollars)

Variable charges:	
Maintenance	560,000
Operating	629,900
Labor (operating and maintenance)	1,870,900
Employee expenses (operating and maintenance)	18,500
Transportation (operating and maintenance)	18,800
Contracted expenses (operating and maintenance)	276,600
Limestone	449,000
Replacement energy	2,109,000
Total variable	7,994,800
Fixed charges:	
Interest	4,200,000
Depreciation	924,000
Insurance and taxes	1,500,000
Interim replacement	396,000
Total fixed	7,020,000
Total annual	14,964,800

TABLE 20. SHERBURNE 1 AND 2 ADJUSTED CAPITAL COSTS (1977 dollars)

Adjustments	
Total reported capital	69,964,040
Particulate control deduction	-15,000,000
Fan capacity deduction	-135,900
Particulate control waste disposal	-6,667,500
Additional waste disposal pond capacity	+1,500,000
Total indirect charges	29,000,000
Conversion to July 1, 1977, dollars	22,918,360
Total adjusted capital	101,579,000

TABLE 21. SHERBURNE 1 AND 2 ADJUSTED ANNUAL COSTS (1977)

Category	Costs, $
Variable	5,091,800
Overhead	715,000
Fixed charges	13,745,000
Total annual	18,836,800

APPENDIX A

PLANT SURVEY FORM

A. Company and Plant Information

1. Company name: Northern States Power Company
2. Main office: 414 Nicollet Mall, Minneapolis, Minnesota
3. Plant name: Sherburne County Generating Station
4. Plant location: Becker, Minnesota
5. Responsible officer: _____
6. Plant manager: _____
7. Plant contact: Bob Catron
8. Position: Assistant production engineer
9. Telephone number: (612)261-4100
10. Date information gathered: May 19, 1977, and April 7, 1978

Participants in meeting	Affiliation
R. Kruger	Northern States Power Co.
B. Catron	Northern States Power Co.
B. Laseke	PEDCo ENVIRONMENTAL
H. Drake	PEDCo ENVIRONMENTAL
T. Ponder	PEDCo ENVIRONMENTAL
R. Klier	PEDCo ENVIRONMENTAL

B. Plant and Site Data

1. UTM coordinates: _____

2. Sea Level elevation: _____

3. Plant site plot plan (Yes, No): Yes
(include drawing or aerial overviews)

4. FGD system plan (Yes, No): Yes

5. General description of plant environs: Lightly industrialized rural area

6. Coal shipment mode(s): Unit train

C. FGD Vendor/Designer Background

1. Process: Limestone/alkaline fly ash

2. Developer/licensor: Combustion Engineering

3. Address: 1000 Prospect Hill, Windsor, Connecticut

4. Company offering process:

Company: Combustion Engineering

Address: 1000 Prospect Hill

Location: Windsor, Connecticut

Company contact: A.J. Snider

Position: Manager, Environmental Control

Telephone number: (203)688-1911

5. Architectural/engineer:

Company: Black and Veatch

Address:

Location: Kansas City, Missouri

Company contact: R.M. Butcher

Position: Project Manager

Telephone number:

D. Boiler Data

1. Boiler: 1 and 2

2. Boiler manufacturer: Combustion Engineering

3. Boiler service (base, intermediate, cycling, peak):

Base load

4. Year placed in service: 5/1/76 (Unit 1), 4/1/77 (Unit 2)

5. Total hours operation (date)*: 18,614 (Unit 1); 11,756 (Unit 2)

6. Remaining life of unit:

7. Boiler type: Single reheat, balanced draft, pulverized coal

8. Served by stack no.: 1

9. Stack height: 198 m (650 ft)

10. Stack top inner diameter: 9.8 m (32 ft)

11. Unit ratings (MW):

Gross unit rating: 720

Net unit rating without FGD: 700

* As of September 1978.

Net unit rating with FGD: 680 MW

Name plate rating: 740 MW at 5% turbine overpressure

12. Unit heat rate:

Heat rate without FGD: _____

Heat rate with FGD: 10,510 kJ/net kWh (9,960 Btu/net kWh)

13. Boiler capacity factor, (1977): 75.7 (station)

14. Fuel type: Coal

15. Flue gas flow rate:

Maximum: 1350 m^3/s (2,859,000 acfm)

Temperature: 154°C (310°F)

16. Total excess air: _____

17. Boiler efficiency: _____

E. Coal Data

1. Coal supplier(s):

Name(s): Western Energy and Westmoreland Resources

Location(s): _____

_____

Mine location(s): Colstrip and Sarpy Creek areas

County, State: Montana

Seam: _____

2. Gross heating value: 19,800 kJ/kg (8500 Btu/lb)

3. Ash (dry basis): 12%

4. Moisture: 25%

5. Sulfur (dry basis): 1.07%

6. Chloride: _____

7. Ash composition (See Table A1)

Table A1

Constituent	Percent weight
Silica, SiO_2	32.0
Alumina, Al_2O_3	21.0
Titania, TiO_2	0.5
Ferric oxide, Fe_2O_3	6.0
Calcium oxide, CaO	17.0
Magnesium oxide, MgO	4.0
Sodium oxide, Na_2O	0.3
Potassium oxide, K_2O	0.3
Phosphorous pentoxide, P_2O_5	0.5
Sulfur trioxide, SO_3	16.5
Other	
Undetermined	1.9

F. Atmospheric Emission Regulations

1. Applicable particulate emission regulation

   a) Current requirement: 37 ng/J (0.097 lb/10^6 Btu)

      Regulation and section: _____

   b) Future requirement: _____

      Regulation and section: _____

2. Applicable SO_2 emission regulation

   a) Current requirement: 413 ng/J (0.96 lb/10^6 Btu)

      Regulation and section: _____

   b) Future requirement: _____

      Regulation and section: _____

G. Chemical Additives: (Includes all reagent additives - absorbents, precipitants, flocculants, coagulants, pH adjusters, fixatives, catalysts, etc.)

1. Trade name: Limestone

   Principal ingredient: $CaCO_3$ (95%)

   Function: Scrubbing additive

   Source/manufacturer: _____

   Quantity employed: 3.5 - 4.9 Mg/h (3.9 - 5.4 tons/h)

   Point of addition: Reaction tank

2. Trade name: Not applicable (N/A)

   Principal ingredient: _____

   Function: _____

   Source/manufacturer: _____

   Quantity employed: _____

   Point of addition: _____

3. Trade name: N/A

   Principal ingredient: _____

   Function: _____

   Source/manufacturer: _____

   Quantity employed: _____

   Point of addition: _____

4. Trade name: N/A

   Principal ingredient: _____

   Function: _____

   Source/manufacturer: _____

   Quantity employed: _____

   Point of addition: _____

5. Trade name: N/A

Principal ingredient: _____

Function: _____

Source/manufacturer: _____

Quantity employed: _____

Point of addition: _____

H. Equipment Specifications

1. Electrostatic precipitator(s) N/A

Number: _____

Manufacturer: _____

Design removal efficiency: _____

Outlet temperature: _____

Pressure drop: _____

2. Mechanical collector(s) N/A

Number: _____

Type: _____

Size: _____

Manufacturer: _____

Design removal efficiency: _____

Pressure drop: _____

3. Particulate scrubber(s)

Number: 12

Type: Venturi rod scrubber

Manufacturer: Combustion Engineering

Dimensions: _____

Material, shell: Carbon steel inlet, 316L SS skirt and venturi

Material, shell lining: _____

Material, internals: 316L SS rods

No. of modules per train: One

No. of stages per module: One

No. of nozzles or sprays: 26

Nozzle type: Ceramic

Nozzle size: _____

Boiler load capacity: 9% maximum per module (109% total)

Gas flow and temperature: 123 m^3/s (259,900 cfm), 154°C (310°F

Liquid recirculation rate: 223 liters/s (3540 gpm) per module

Modulation: _____

L/G ratio: 1.8 liters/m^3 (14 gal/10^3 acf)

Pressure drop: 3.25 kPa (13.0 in. H_2O)

Modulation: _____

Superficial gas velocity: 24 m/s (80 ft/s)

Particulate removal efficiency (design/actual): See SO_2 absor

Inlet loading: See SO_2 absorber

Outlet loading: See SO_2 absorber

SO_2 removal efficiency (design/actual): See SO_2 absorber

Inlet concentration: See SO_2 absorber

Outlet concentration: See SO_2 absorber

4. SO_2 absorber(s)

Number: 12 (integrated with scrubbers)

Type: Marble-bed absorber

Manufacturer: Combustion Engineering

Dimensions: _____

Material, shell: Carbon steel

Material, shell lining: Flake fiberglass

Material, internals: 316L perforated plate, FRP spray headers

No. of modules per train: One

No. of stages per module: One

Packing/tray type: Glass spheres

Packing/tray dimensions: 10 cm (4 in.)

No. of nozzles or sprays: 63

Nozzle type: Ceramic

Nozzle size:

Boiler load capacity: 9% maximum per module (109% total)

Gas flow and temperature: 94 m^3/s (200,000 cfm); 54°C (130°F)

Liquid recirculation rate: 120 liters/s (1900 gpm)

Modulation:

L/G ratio: 1.3 liters/m^3 (9.5 gal/10^3 acf)

Pressure drop: 1.5 kPa (6.0 in. H_2O)

Modulation:

Superficial gas velocity: 9.5 m/s (31 ft/s)

Particulate removal efficiency (design/actual): * 99% of inlet or 0.09 g/m^3, whichever is greater/99%

Inlet loading: 6.9 g/m^3 (3.0 gr/scf); dry basis

Outlet loading: 0.09 g/m^3 (0.04 gr/scf); dry basis

SO_2 removal efficiency (design/actual): * 50% or 200 ppm at outlet, whichever is greater/55-60%

Inlet concentration: 700 ppm

Outlet concentration: 300 ppm

5. Wash water tray(s) N/A

Number:

* This is overall scrubber and absorber data on dry basis.

Type: _____

Materials of construction: _____

Liquid recirculation rate: _____

Source of water: _____

6. Mist eliminator(s)

Number: One per module

Type: Chevron

Materials of construction: FRP

Manufacturer: _____

Configuration (horizontal/vertical): Horizontal

Number of stages: Two

Number of passes per stage: Three

Mist eliminator depth: _____

Vane spacing: _____

Vane angles: _____

Type and location of wash system: High-pressure spray for 2 min every 24 hs by four soot-blower type washers

Superficial gas velocity: 9.2 m/s (31 ft/s)

Freeboard distance: 3.2 m (10.5 ft)

Pressure drop: 0.125 kPa (0.5 in. H_2O)

Comments: _____

7. Reheater(s): One per module

Type (check appropriate category): _____

- [x] in-line
- [ ] indirect hot air
- [ ] direct combustion
- [ ] bypass
- [ ] exit gas recirculation
- [ ] waste heat recovery
- [ ] other

Gas conditions for reheat:

Flow rate: 94 m^3/s (200,000 cfm)

Temperature: 54°C (130°F)

SO_2 concentration: 300 ppm

Heating medium: Hot water

Combustion fuel: N/A

Percent of gas bypassed for reheat: N/A

Temperature boost (ΔT): 22°C (40°F)

Energy required: _____

Comments: About 3 m (10 ft) above M.E. consisting of 45 parallel finned tubes

8. Fan(s)

Number: Four

Type: Induced-draft, axial flow

Materials of construction: Carbon steel

Manufacturer: Green Fuel Economizer

Location: Downstream of reheater

Rating: 4500 kw (6000 hp)

Pressure drop: 11 kPa (44 in. H_2O)

9. Recirculation tank(s):

Number: One per module

Materials of construction: _____

Function: Recycle/reaction

Configuration/dimensions: Rectangular

Capacity: 254,000 liters (66,000 gal)

Retention time: _____

Covered (yes/no): Yes (internal of module)

Agitator: _____

10. Recirculation/slurry pump(s):

Number: One per module

Type: Centrifugal

Manufacturer: Worthington

Materials of construction: Cast iron

Head: 84 m (275 ft)

Capacity: 7700 liters/m (2000 gpm)

11. Thickener(s)/clarifier(s)

Number: One

Type: Center-driven rake mechanism

Manufacturer: Dorr-Oliver

Materials of construction: _____

Configuration: _____

Diameter: 50 m (160 ft)

Depth: 3 m (10 ft)

Rake speed: _____

Retention time: _____

12. Vacuum filter(s) N/A

Number: _____

Type: _____

Manufacturer: _____

Materials of construction: _____

Belt cloth material: _____

Design capacity: _____

Filter area: _____

13. Centrifuge(s) N/A

Number: _____

Type: _____

Manufacturer: _____

Materials of construction: _____

Size/dimensions: _____

Capacity: _____

14. Interim sludge pond(s) N/A

Number: _____

Description: _____

Area: _____

Depth: _____

Liner type: _____

Location: _____

Service Life: _____

Typical operating schedule: _____

_____

Ground water/surface water monitors: _____

_____

15. Final disposal site(s)

Number: One

Description: Clay-lined settling pond

Area: 251,000 m^2 (62 acres)

Depth: 15.2 m (50 ft)

Location: Onsite

Transportation mode: Pipe

Service life: 7 to 9 yr

Typical operating schedule:

16. Raw materials production

Number: Two (Serve both units)

Type: Wet ball mills

Manufacturer: Allis Chalmers

Capacity: 22 Mg/h (24 tons/h) each

Product characteristics: 60% slurry from ball mills

80% less than 200 mesh

I. Equipment Operation, Maintenance, and Overhaul Schedule

1. Scrubber(s)

Design life:

Elapsed operation time:

Cleanout method:

Cleanout frequency:

Cleanout duration:

Other preventive maintenance procedures:

2. Absorber(s)

Design life: _____

Elapsed operation time: _____

Cleanout method: _____

Cleanout frequency: _____

Cleanout duration: _____

Other preventive maintenance procedures: _____

_____

3. Reheater(s)

Design life: _____

Elapsed operation time: _____

Cleanout method: _____

Cleanout frequency: _____

Cleanout duration: _____

Other preventive maintenance procedures: _____

_____

4. Fan(s)

Design life: _____

Elapsed operation time: _____

Cleanout method: _____

Cleanout frequency: _____

Cleanout duration: _____

Other preventive maintenance procedures: _____

_____

5. Mist eliminator(s)

Design life: _____

Elapsed operation time: _____

Cleanout method: _____

Cleanout frequency: _____

Cleanout duration: _____

Other preventive maintenance procedures: _____

_____

6. Pump(s)

Design life: _____

Elapsed operation time: _____

Cleanout method: _____

Cleanout frequency: _____

Cleanout duration: _____

Other preventive maintenance procedures: _____

_____

7. Vacuum filter(s)/centrifuge(s) N/A

Design life: _____

Elapsed operation time: _____

Cleanout method: _____

Cleanout frequency: _____

Cleanout duration: _____

Other preventive maintenance procedures: _____

_____

8. Sludge disposal pond(s)

Design life: 7 to 9 yr

Elapsed operation time: _____

Capacity consumed: _____

Remaining capacity: _____

Cleanout procedures: _____

_____

J. Instrumentation

A brief description of the control mechanism or method of measurement for each of the following process parameters:

- Reagent addition: _____

  _____

- Liquor solids content: _____

  _____

- Liquor dissolved solids content: _____

  _____

- Liquor ion concentrations

  Chloride: _____

  _____

  Calcium: _____

  _____

  Magnesium: _____

  _____

  Sodium: _____

  _____

  Sulfite: _____

  _____

  Sulfate: _____

  _____

  Carbonate: _____

  _____

  Other (specify): _____

  _____

- Liquor alkalinity: _____

- Liquor pH: _____

- Liquor flow: _____

- Pollutant (SO_2, particulate, NO_x) concentration in flue gas: _____

- Gas flow: _____

- Waste water _____

- Waste solids: _____

Provide a diagram or drawing of the scrubber/absorber train that illustrates the function and location of the components of the scrubber/absorber control system.

Remarks: See process control section in main body of text.

K. Discussion of Major Problem Areas:

1. Corrosion: See section on problems and solutions in the text.

2. Erosion: _____

3. Scaling: _____

4. Plugging: _____

5. Design problems: _____

6. Waste water/solids disposal: _____

7. Mechanical problems: _____

L. General comments: _____

APPENDIX B

PLANT PHOTOGRAPHS

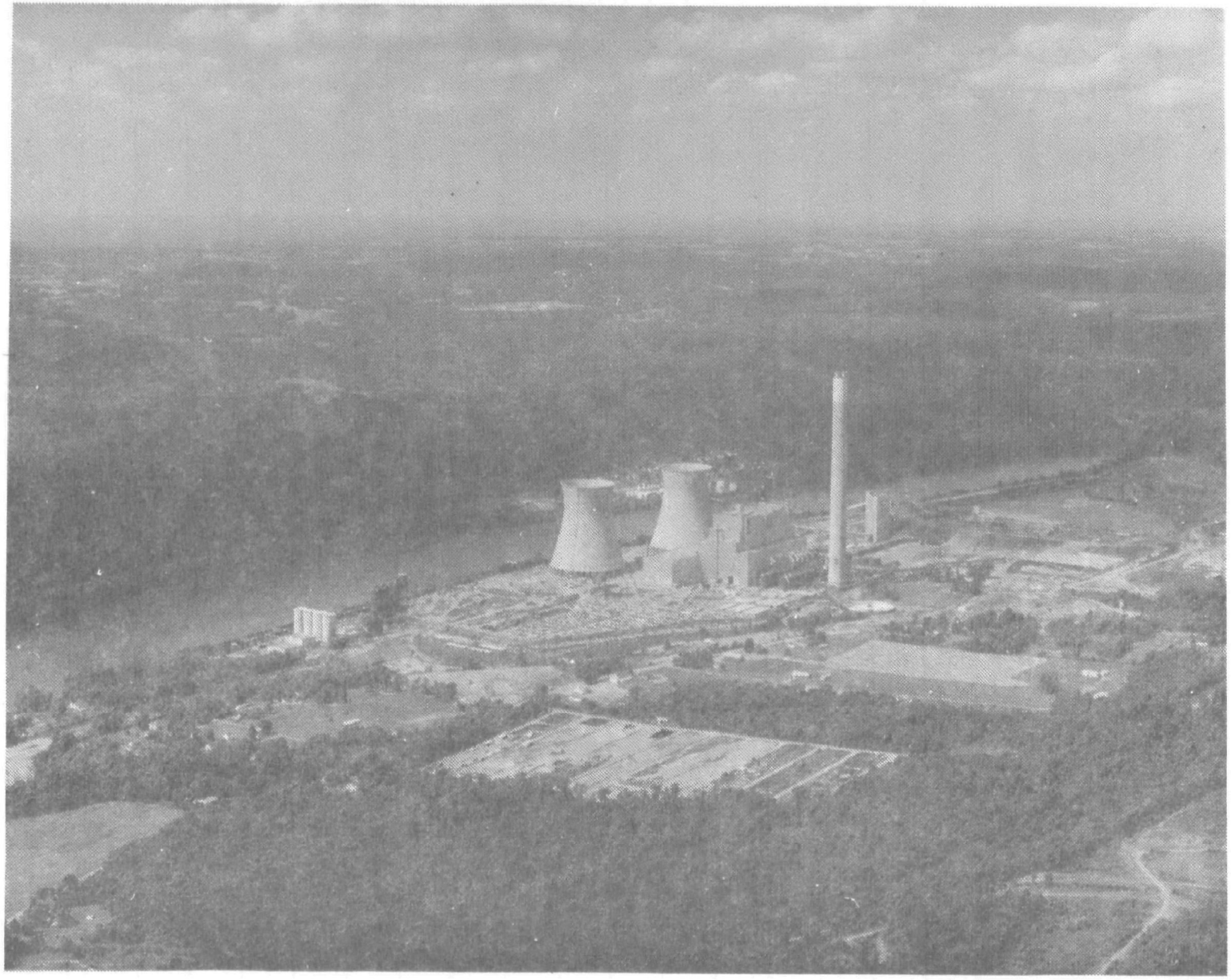

Photo No. 1. View of Bruce Mansfield Station. Featured are the hyperbolic cooling towers, boilerhouse, scrubbing trains, and stack. Both units are still under construction at this time.

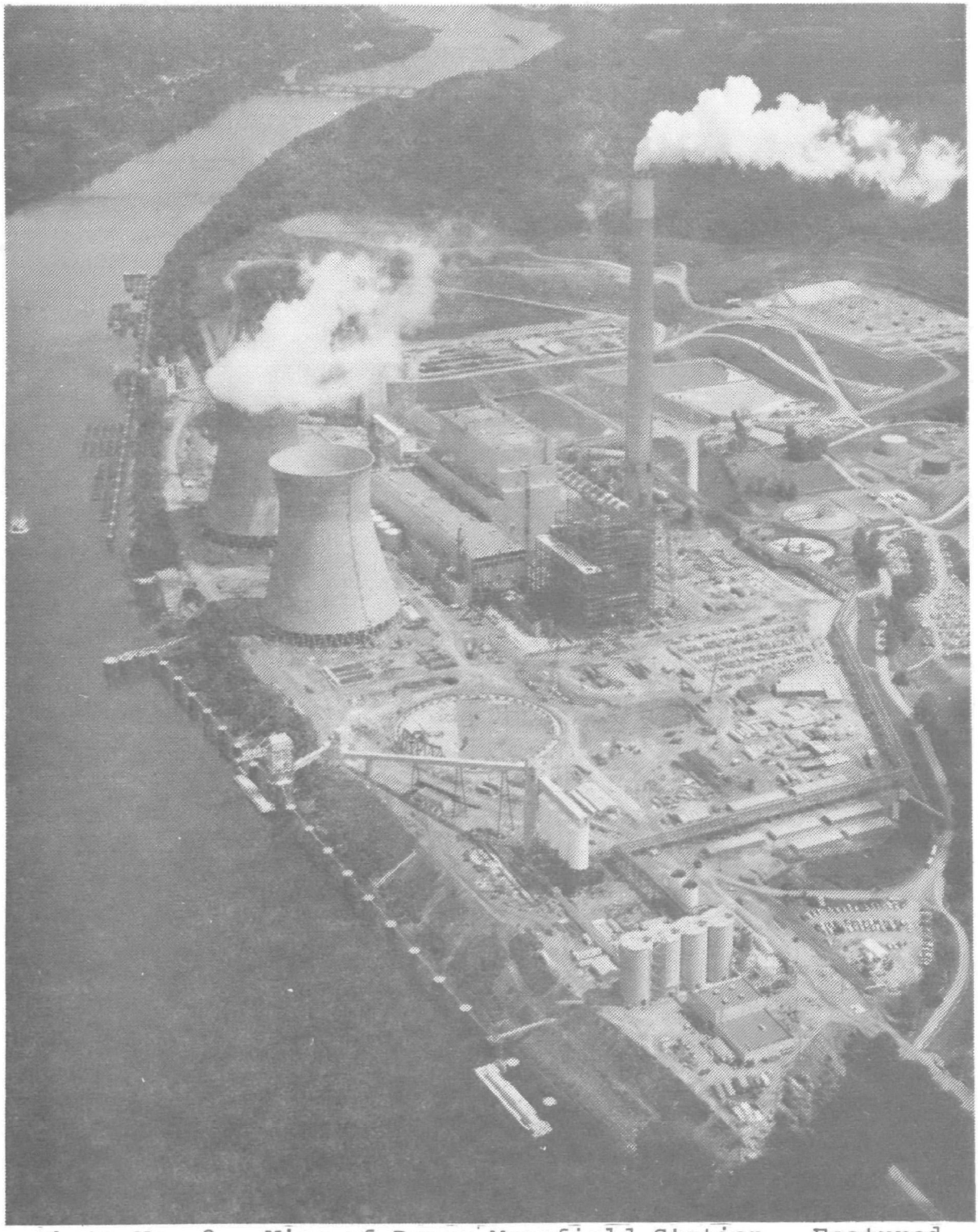

Photo No. 2. View of Bruce Mansfield Station. Featured from left to right are the barge harbor (full at top, empty at bottom), cooling towers, boilerhouses, scrubbing trains, and stack. Unit 1 is in service; Units 2 and 3 are under construction.

Photo No. 3. View of Little Blue Run sludge containment reservoir. Featured in foreground are the containment dam and reservoir. Featured in background, from left to right, are the Bruce Mansfield and Beaver Valley stations.

APPENDIX C-1

OPERATIONAL FGD SYSTEM COST DATA

Date June 27, 1978

Utility Name Northern States Power Company

Address 414 Nicollet Mall, Minneapolis, Minnesota

Name of Contact - Title Bob Catron, Plant Engineer

Phone No. (612) 261-4100

Station Sherburne County

Unit Identification Nos. 1 and 2

Unit Size, 1440 gross MW, 2,340,000 acfm @ 171 °F

Net MW w/o FGD 1400

Net MW w/FGD 1360

FGD System Size, 1440 MW

2,340,000 acfm @ 171 °F

Footnote No.

COST BREAKDOWN

I. CAPITAL COSTS OF FGD SYSTEM INSTALLATION

A. Year(s) to which estimates below apply: 1971-1977

B. Year of greatest capital expenditure: 1972

C. Month and year estimates made: April 1978

D. Date FGD contract awarded: 1971

Date FGD construction began: August 1972

Date of initial FGD system start-up: Mar. 1, 1976 (Unit 1) Apr. 1, 1977 (Unit 2)

Date of commercial FGD system start-up: May 1, 1976 (Unit 1) May 1, 1977 (Unit 2)

E. Expected FGD system life: 30 years

F. Cost adjustment made by: B.A. Laseke, Jr.

G. Cost adjustment checked by: B.A. Laseke, Jr.

Footnote No.		Included in reported total cost Yes	No	Capital cost, $
	H. Direct capital cost			
1	1. Particulate collection			
	Equipment cost	X		
	Installation cost	X		
	Total cost	X		15,000,000
2	2. Facilities for reagent handling and preparation			
	Equipment cost	X		
	Installation cost	X		
	Total cost	X		
3	3. SO_2 absorber and related equipment			
	Equipment cost	X		
	Installation cost	X		
	Total cost	X		45,000,000
4	4. Fans installed for FGD			
	Equipment cost	X		
	Installation cost	X		
	Total cost	X		302,000
5	5. Reheat			
	Equipment cost	X		
	Installation cost	X		
	Total cost	X		675,652

Footnote No.		Included in reported total cost Yes	No	Capital cost, $
6	6. Solids disposal: site			
	Equipment cost	X		
	Installation cost	X		
	Total cost	X		9,525,000

Location of interim and final disposal site(s) On the plant site approximately 0.5 mi from the boilerhouse

When was site(s) acquired or year of expected acquisition 1969

Cost when acquired or at time of expected acquisition N/A

Life span 6 to 7 year service life

Required site treatment (lining, surface preparation, etc.) Natural clay lining where required

7 Composition of disposed material (flyash 21 %, bottom ash 0 %, SO_2 waste 9 %, unreacted reagent 0 %, water 70 %).

	7. Solids disposal: transport system			
	Contract cost		X	
	Equipment cost	X		
	Installation cost	X		
	Total cost	X		Included in item 6

Footnote No.			Included in reported total cost Yes	No	Capital cost, $
8	8.	Solids disposal: treatment system			
		Equipment cost	X		
		Installation cost	X		
		Total cost	X		
	9.	By-product recovery: regenerative system			
		Equipment cost		X	
		Installation cost		X	
		Total cost		X	N/A
	10.	By-product recovery plant			
		Equipment cost		X	
		Installation cost		X	
		Total cost		X	N/A
9	11.	Instrumentation and controls			
		Equipment cost	X		
		Installation cost	X		
		Total cost	X		346,000
10	12.	Utilities and services			
		Equipment cost	X		
		Installation cost	X		
		Total cost	X		

N/A - Not applicable

Footnote No.		Included in reported total cost Yes	No	Capital cost, $
	13. Stack requirements due to FGD			
	Equipment cost		X	
	Installation cost		X	
	Total cost		X	
11	14. Additional system modifications			
	Equipment cost	X		
	Installation cost	X		
	Total cost	X		119,040
	15. Other			
	Equipment cost		X	
	Installation cost		X	
	Total cost		X	
	16. Other			
	Equipment cost		X	
	Installation cost		X	
	Total cost		X	
	17. Other			
	Equipment cost		X	
	Installation cost		X	
	Total cost		X	

Footnote No.		Included in reported total cost Yes	No	Capital cost, $
18.	Other			
	Equipment cost		X	
	Installation cost		X	
	Total cost		X	
19.	Other			
	Equipment cost		X	
	Installation cost		X	
	Total cost		X	
20.	Other			
	Equipment cost		X	
	Installation cost		X	
	Total cost		X	
	Direct cost subtotal			
	Equipment cost	X		
	Installation cost	X		
	Total cost	X		69,964,040
	I. Indirect Costs			
1.	Engineering			
	In-house		X	
	A-E		X	
2.	Construction expenses			
	In-house		X	
	Contractor		X	

Footnote No.		Included in reported total cost Yes	No	Capital cost, $
	3. Contractor fees		X	
	4. Subcontractor fees		X	
	5. Allowance for funds used during construction		X	
	6. Allowance for start-up		X	
	7. Contingency		X	
	8. Escalation		X	
	9. Spares, offsite, taxes, freight, etc.		X	
	10. Research and development		X	
	11. Other		X	
	Indirect cost subtotal		X	

J. Total Direct and Indirect Costs $69,064,040

$/kW (gross) 47.96

II. ANNUAL OPERATING COST

Footnote No.		Included in reported total cost Yes	No	Cost, $
12	A. Variable Costs	All variable costs are qualified and quantified in Footnote 12 on page 12		
	1. Particulate removal			
	a. Operating	X		
	(1) Labor	X		
	(2) Supervision	X		
	b. Electricity	X		
	c. Other utilities		X	
	(1) Water		X	

Footnote No.		Included in reported total cost Yes	No	Cost, $
	d. Maintenance	X		
	(1) Labor	X		
	(2) Supplies	X		
	Subtotal particulate	X		
	2. SO_2 absorber			
	a. Operating	X		
	(1) Labor	X		
	(2) Supervision	X		
	b. Electricity consumption			
	(1) Feed preparation	X		
	(2) Reheat		X	
	(3) Fans	X		
	(4) SO_2 absorber	X		
	(5) Other	X		
	c. Fuel			
	(1) Reheat	X		
	(2) Other		X	
	d. Other Utilities			
	(1) Water		X	
	(2) Other		X	
	e. Maintenance			
	(1) Labor	X		
	(2) Supplies	X		

Footnote No.		Included in reported total cost Yes	No	Cost, $
	Subtotal absorber	X		
	3. Raw materials			
	a. Lime		X	
	b. Limestone	X		
	c. Fuel for process needs		X	
	d. Sodium hydroxide		X	
	e. Magnesium oxide		X	
	f. Sodium carbonate		X	
	g. Flocculant		X	
	h. Other		X	
	Subtotal raw materials	X		
	4. Solid and liquid waste disposal			
	a. Operating			
	(1) Labor	X		
	(2) Supervision	X		
	b. Electricity consumption	X		
	c. Other utilities			
	(1) Water		X	
	(2) Other		X	
	d. Maintenance			
	(1) Labor	X		
	(2) Supplies	X		
	e. Other	X		
	f. Credit for by-product recovery		X	N/A

N/A - Not Applicable

Footnote No.		Included in reported total cost Yes	No	Cost, $
	g. Wastewater treatment	X		
	Subtotal disposal	X		
	5. Overhead			
	a. Plant		X	
	b. Administrative		X	
	Subtotal		X	
	Total Variable Costs	X		7,994,800
13	B. Fixed Charges			
	1. Interest	X		4,200,000
	2. Annual depreciation	X		924,000
	3. Insurance	X		1,500,000
	4. Taxes	X		
	5. Other, specify	X		396,000
	Total Fixed Costs	X		7,020,000
	C. Total Variable and Fixed Costs	$14,964,800		
	mills/kWh(net)	1.986		

FOOTNOTES

Line	Page	
1	C-2	Each unit is equipped with 12 two-stage modules for wet-phase particulate and SO_2 removal. In addition, each unit is provided with one spare module. Only one-fourth of the $60,000,000 in original equipment expenditures has been assessed for particulate removal because the rod scrubber alone removes essentially all the particulate (and half of the SO_2).
2	C-2	One common reagent handling and preparation facility is used for both systems. Included are two wet ball mills (Allis Chalmers 36 tons/hour design capacity; 24 tons/hour actual), storage sites preparation tanks, agitators, and transfer pumps. The primary source of reagent is supplied by the alkalinity of the captured fly ash.
3	C-2	Removal of SO_2 occurs in the rod scrubber and the marble-bed absorber. Three-fourths of the original equipment expenditures are assessed for SO_2 removal.
4	C-2	Each unit is equipped with four induced-draft scrubber booster fans (Green Fuel Economizer). The fans are designed to handle a gas-side pressure drop of 44 in. H_2O of which 24 in. H_2O is due to the scrubber. The fans for Sherburne 1 cost $163,000 for equipment and installation; the fans for Sherburne 2 cost $139,000 for equipment and installation.
5	C-2	Finned-tube carbon steel heat exchangers using hot water raise the gas temperature 40°F prior to discharge through the fans and ducts to the stack. Unit 1's reheat system cost $332,064, including pumps, ($30,650), pipes and hangers ($244,301), and installation ($57,113). Unit 2's reheat system cost $343,588, including pumps ($31,720), pipes and hangers ($252,800), and installation ($59,068).
6	C-3	Four ponds were built for solid waste disposal. Two of these ponds, the fly ash pond and holding basin, were built for the scrubbing system. These ponds, representing a total area of 65.5 acres, were embellished with a clay lining and were originally provided for the lifespan of both units. This has now been revised to a 6 to 7 year lifespan. The total cost of ponds and equipment was $8,963,000; plus $562,000 for inclusion of the thickeners,

(continued)

Line	Page	
		piplines, pumps, and other waste solids transportation equipment. The user plants to expand the present area of the ponds in order to extend pond life.
7	C-3	The thickener underflow is about 30 percent solids, of which 70 percent is fly ash and the remainder sulfur-bearing calcium slats (21 percent of the underflow is fly ash and 9 percent calcium sulfate); virtually all the sulfur-bearing calcium salts have been converted to sulfate by forced oxidation. All of the limestone additive is assumed to be used in this system.
8	C-4	A forced oxidation system (350% stoichiometric air) is bubbled through the internal recycle tank, converting all the remaining sulfite to sulfate prior to solids separation and waste disposal. The cost of the forced oxidation system is included in the cost of the scrubbing equipment.
9	C-4	The costs of all process and flow instrumentation and controls are included in the total equipment cost. In addition, $346,000 in air and water quality monitoring has been included.
10	C-4	Process water, electrical hookup, and switchgear costs are included in the direct capital costs.
11	C-5	Severe plugging problems with the spray nozzles necessitated replacement of the duplex strainers with in-tank screens on the suction side of the spray pumps. Carbon steel screens were used originally and failed (erosion). 316 stainless steel screens have been or are being placed in all the tanks at a cost of $119,040 for material and $960 for labor per screen.
12	C-7	All variable costs associated with the Sherburne 1 and 2 scrubbing systems were reported in the following manner:

(continued)

FOOTNOTES (continued)

Line	Page	
		° Maintenance: $560,300 ° Operating: $629,900 ° Labor (operating and maintenance): $1,870,900 ° Employee expenses (operating and maintenance): $18,500 ° Transportation (operating and maintenance): $18,800 ° Contracted expenses (operating and maintenance): $276,600 ° Limestone: $449,000 ° Replacement energy (13 mills/kWh): $2,109,000
13	C-10	The user reported fixed charges based on the original capital cost of $60,000,000 using the following fixed charge factors: ° Interest: 7 percent ° Annual depreciation: 1.54 percent ° Insurance and taxes: 2.5 percent ° Interim replacement: 0.66 percent ° Total fixed rate: 11.7 percent

APPENDIX C-2

COST ADJUSTMENTS

1. Each unit consists of 12 two-stage particulate and SO_2 removal scrubber-absorber modules: 11 full load and 1 spare. Scrubbing solution is circulated through both the scrubber and absorber. Northern States Power estimates that half the SO_2 removal from the flue gas (50 to 55%) takes place in the rod scrubber. The utility also estimates that $30,000,000 of the $60,000,000 originally allocated for all the scrubbing modules and ancillary equipment ($2,500,000 per module) was allocated for particulate removal equipment and the other $30,000,000 for SO_2 removal. Since half of the SO_2 is removed in the venturi, however, about $15,000,000 or about half of $30,000,000 (1975 dollars; $625,000 per module) is backed out of the costs.

   - $60,000,000 - $15,000,000 for particulate removal = $45,000,000

2. A total of $9,525,000 was allocated for the fly-ash pond and holding basin used for the scrubbing system. Thickener underflow discharge to the settling ponds is about 21 percent fly ash, 9 percent SO_2 wastes, and 70 percent H_2O. Therefore, 21/30 or 70 percent of the cost of the ponds is used for fly ash removal and backed out of the costs.

   - $9,525,000 - $6,667,500 = $2,857,500

3. Eight ID booster fans were supplied for both units. The cost of the four ID fans for Unit 1 was $163,000. Since 24 in. H_2O of the 44 in. H_2O is for the scrubber and 24/44 = .45, 45 percent of the $163,000 is removed.

   - $163,000 - $73,350 = $89,650

   The cost of the four ID fans for Unit 2 was $139,000, of which 45 percent is removed.

   - $139,000 - $62,550 = $76,450.

4. The sludge ponds were originally designed for the lifetime of both units. This is now changed to a 6- to 7-year lifespan. Based on a 30 percent solids thickener underflow and an additional 23-year capacity, costs have been computed for the following:

   - 84,000 lb/h of sludge to pond per unit (dry basis)
   - 168,000 lb/h of sludge to pond for both units (dry basis)
   - 50,400 lb/h of SO_2 wastes (dry basis)

- 168,000 lb/h of SO_2 wastes (wet basis - 30 percent solids)
- 84 tons/h of SO_2 wastes (wet basis - 30 percent solids)

Based on a 23-year additional storage capacity requirement, the extra costs for the SO_2 portion, which will require an additional 3200 acre-ft of pond, amount to $1,500,000 in 1974 dollars.

5. Direct cost adjustments:

Total reported direct costs: $69,964,040
Particulate removal equipment: -$15,000,000
Particulate sludge disposal area: -$6,667,500
Additional ID booster fan capacity: -$135,900
Additional SO_2 wastes storage capacity: +$1,500,000

6. Conversion to July 1, 1977, dollars:

Much of the FGD plant equipment was purchased in 1971 and 1972. An actual breakdown of the expenditures by year is not available. Therefore, the following assumptions have been made:

- Assume 75 percent of the original expenditures ($60,000,000) were made in 1971 and 1972. Assume the sludge disposal area expenditures ($9,525,000) were made in 1973 and 1974. (The cost of additional SO_2 waste storage capacity is calculated in 1974 dollars.)

The following table presents the 1977 value of reported direct costs:

Year	Expenditures (dollars)	1977 value (dollars)
1971	22,500,000	34,730,290
1972	22,500,000	33,480,000
1973	9,762,500	13,834,857
1974	9,762,500	12,045,274
1975	5,000,000	5,598,194
1976	320,000	340,114
1977	119,040	119,040
Total	69,964,040	100,147.770

7. Direct capital cost adjustments:

- $15,000,000 for particulate removal
  5,625,000 in 1971 dollars
  5,625,000 in 1972 dollars
  1,250,000 in 1973 dollars = $21,765,850 (1977 dollars)
  1,250,000 in 1974 dollars
  1,250,000 in 1975 dollars

- $6,667,500 for fly-ash sludge removal
  3,333,750 in 1974 dollars = 7,447,000 (1977 dollars)
  3,333,750 in 1974 dollars

- $135,900 for additional fan horsepower
  67,950 in 1971 dollars = $206,000 (1977 dollars)
  67,950 in 1972 dollars

- Additional SO_2 waste pond capacity
  $1,500,000 in 1974 dollars = $1,850,000 (1977 dollars)

Total adjusted direct capital cost: $73,579,000

8. Indirect capital cost adjustments:

   Since the reported capital costs excluded all indirect cost elements, the following items and amounts are included in the adjusted total:

   - Interest during construction: $6,350,000
   - Engineering fees: $7,260,000
   - Field overheads: $7,260,000
   - Cost of spares, offsite, taxes, freight: $4,500,000
   - Allowance for startup: $3,630,000

   Total adjusted indirect capital costs: $29,000,000

9. The adjusted total capital cost:

   $ 72,579,000
   29,000,000
   $101,579,000 = 70.54/kW (gross)

10. Adjusted annual variable costs:

    - Reported 1977 cost: $7,944,800
    - Replacement energy cost: -$2,109,000
    - Particulate removal cost: -$1,459,000
    - Overhead cost: +$715,000

    Adjusted variable cost: $5,091,800
    65 percent capacity factor: 0.75 mills/kWh (net)

11. Adjusted fixed costs:

    With a straight line annual depreciation rate of 3.33 percent instead of a Iowa curve value of 1.54 percent, and an interim replacement rate of 0.7 percent instead of 0.66 percent, the annual fixed charge rate is 13.53 percent, giving the following fixed charges based upon the total adjusted capital cost:

    13.53 percent of $101,579,000 = $13,745,000
    65 percent capacity factor = $2.02 mills/kWh

12. Total adjusted annual cost for 1977:

Variable cost:	$5,091,800	0.75 mills/kWh
Fixed cost:	$13,745,000	2.02 mills/kWh
Annual cost:	$18,836,800	2.77 mills/kWh

13, Summary of adjusted costs:

Total capital:	$101,579,000	$71.53/kW (gross)
Total annual:	$18,836,800	2.77 mills/kWh (net)

TECHNICAL REPORT DATA
(Please read Instructions on the reverse before completing)

1. REPORT NO. EPA-600/7-79-199d	2	3. RECIPIENT'S ACCESSION NO.
4. TITLE AND SUBTITLE Survey of Flue Gas Desulfurization Systems: Sherburne County Generating Plant, Northern States Power Co.		5. REPORT DATE August 1979
		6. PERFORMING ORGANIZATION CODE
7. AUTHOR(S) Bernard A. Laseke, Jr.		8. PERFORMING ORGANIZATION REPORT NO. PN 3470-1-C
9. PERFORMING ORGANIZATION NAME AND ADDRESS PEDCo Environmental, Inc. 11499 Chester Road Cincinnati, Ohio 45246		10. PROGRAM ELEMENT NO. EHE624
		11. CONTRACT/GRANT NO. 68-02-2603, Task 24
12. SPONSORING AGENCY NAME AND ADDRESS EPA, Office of Research and Development Industrial Environmental Research Laboratory Research Triangle Park, NC 27711		13. TYPE OF REPORT AND PERIOD COVERED Final; 7/78 - 12/78
		14. SPONSORING AGENCY CODE EPA/600/13

15. SUPPLEMENTARY NOTES IERL-RTP project officer is Norman Kaplan, Mail Drop 61, 919/541-2556.

16. ABSTRACT

This report gives results of a survey of operational flue gas desulfurization (FGD) systems on coal-fired utility boilers in the United States. The FGD systems installed on Units 1 and 2 at the Sherburne County Generating Station of the Northern States Power Company is described in terms of design and performance. Each unit is equipped with an alkaline fly ash/limestone two-stage wet scrubbing system for the control of particulate and sulfur dioxide. Each FGD system includes 12 modules, 11 of which are required for full-load operation. The flue gas cleaning wastes are forcibly oxidized, concentrated in a thickener, and discharged for final disposal in a plant-site clay-lined settling pond. The Sherburne 1 and 2 systems were certified commercial on May 1, 1976 and April 1, 1977 respectively. Operation has been accompanied by a number of problems, most of which have been or are being resolved through system design modifications. Designed for a minimum availability of 90%, the modifications have increased availabilities to the low to mid 90 percent range. The systems have demonstrated compliance with particulate and sulfur dioxide emission regulations.

17. KEY WORDS AND DOCUMENT ANALYSIS

a. DESCRIPTORS		b. IDENTIFIERS/OPEN ENDED TERMS	c. COSATI Field/Group	
Air Pollution	Scrubbers	Air Pollution Control	13B	
Flue Gases	Coal	Stationary Sources	21B	21D
Desulfurization	Combustion	Wet Limestone	07A,07D	
Fly Ash	Cost Engineering	Particulate		14A
Limestone	Sulfur Dioxide			07B
Slurries	Dust Control		11G	
Ponds			08H	

18. DISTRIBUTION STATEMENT Unlimited	19. SECURITY CLASS (This Report) Unclassified	21. NO. OF PAGES 126
	20. SECURITY CLASS (This page) Unclassified	22. PRICE

EPA Form 2220-1 (9-73)