WATER POLLUTION CONTROL RESEARCH SERIES ● 11050FKE 12/69

A STUDY OF FLOW REDUCTION AND TREATMENT OF WASTE WATER FROM HOUSEHOLDS

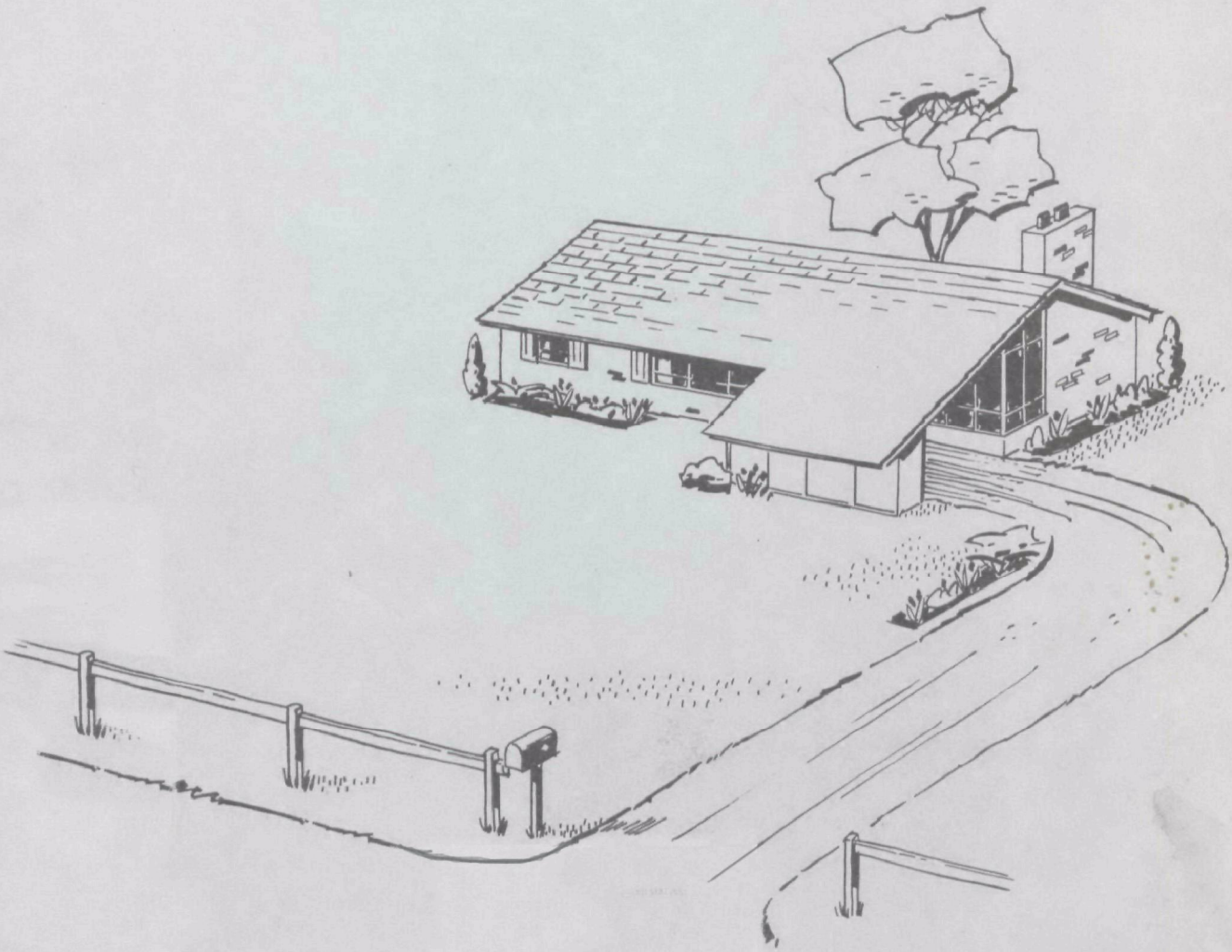

DEPARTMENT OF THE INTERIOR • FEDERAL WATER QUALITY ADMINISTRATION

WATER POLLUTION CONTROL RESEARCH SERIES

The Water Pollution Control Research Reports describe the results and progress in the control and abatement of pollution of our Nation's waters. They provide a central source of information on the research, development, and demonstration activities of the Federal Water Quality Administration, Department of the Interior, through in-house research and grants and contracts with Federal, State, and local agencies, research institutions, and industrial organizations.

Water Pollution Control Research Reports will be distributed to requesters as supplies permit. Requests should be sent to the Planning and Resources Office, Office of Research and Development, Federal Water Quality Administration, Department of the Interior, Washington, D. C. 20242.

A STUDY OF FLOW REDUCTION AND TREATMENT OF WASTE WATER FROM HOUSEHOLDS

by

James R. Bailey
Richard J. Benoit
John L. Dodson
James M. Robb
Harold Wallman

General Dynamics, Electric Boat Division
Groton, Connecticut 06340

for the

FEDERAL WATER QUALITY ADMINISTRATION

DEPARTMENT OF THE INTERIOR

Program #11050 FKE
Contract #14-12-428
FWQA Project Officer, C. L. Swanson
Advanced Waste Treatment Research Laboratory
Cincinnati, Ohio
December, 1969

For sale by the Superintendent of Documents, U.S. Government Printing Office
Washington, D.C. 20402 - Price $1.25

FWQA Review Notice

This report has been reviewed by the Federal Water Quality Administration and approved for publication. Approval does not signify that the contents necessarily reflect the views and policies of the Federal Water Quality Administration, nor does mention of trade names or commercial products constitute endorsement or recommendation for use.

ABSTRACT

This study was conducted to find practical means of waste flow reduction or waste treatment for the ordinary household. First, the present water quality and quantity requirements were reviewed to determine the areas where better water and waste management would be most beneficial. Much helpful material was gathered from a review of previous studies on the problems of individual household waste treatment. More recent information was obtained from manufacturers of plumbing devices and waste treatment equipment who were surveyed for available water-saving plumbing devices and individual waste treatment units. Also, the literature on advanced water and waste treatment was reviewed for processes that might be applicable for individual home usage.

The information collected was then analyzed to determine the most practical methods for decreasing the waste volume flow from individual households. Homeowners, plumbers, architect-engineers, and equipment manufacturers were surveyed to obtain representative opinions from the people who would control the use of any flow reduction or treatment schemes. The results of the study and the consumer survey show that the water used in household functions such as bathing and toilet flushing can be substantially reduced by the use of more efficient appliances and plumbing devices. The use of most advanced waste treatment techniques and the reuse of waste waters is not considered practical except for cases of unusual problems and extremely high water or waste disposal costs.

This report was submitted in fulfillment of Program #11050 FKE, Contract #14-12-428, between the Federal Water Quality Administration and General Dynamics, Electric Boat Division.

TABLE OF CONTENTS

Section	Title	Page
I	INTRODUCTION	1
	Background	1
	Present Study	2
II	PRESENT WATER SYSTEM REQUIREMENTS	4
	Water Quantity Requirements	4
	Water Quality Requirements	8
	Quality Standards for Household Uses	
	Bathing Water Standards	11
	General Washing and Cleaning	14
	Lawn and Garden Irrigation	17
	Toilet Flushing	18
	Effluent Quality Requirements for Disposal	20
	Effluent Quality for Release to Ground Water	22
	Effluent Quality Criteria for Release to Surface Waters and Storm Sewers	24
III	THE WASTE DISPOSAL PROBLEM OF HOMES NOT CONNECTED TO CENTRAL SEWERAGE SYSTEMS	29
	Background of the Septic Tank Problem	29
	Review of Previous Studies	31
	Septic Tank Soil Absorption System Research	31
	Other Individual Systems	36
	Equipment Currently Marketed for Treatment of Waste from Individual Homes	40
	Anaerobic Systems Now Marketed	40
	Conventional Septic Tank	
	A Variation of the Anaerobic System	42
	Discussion of Anaerobic Systems	43
	Survey of Aerobic Systems	44
	Pretreatment	46
	Aeration Chamber	46
	Solids Separation	46
	Final Treatments	46
	Economics of Aerobic Treatment Systems	47
	Discussion of the Aerobic Treatment Systems	48

TABLE OF CONTENTS (Cont'd)

Section	Title	Page
	Discussion of the Future Demand for Individual Waste Disposal Systems	49
	Present Status of Individual Home Systems	49
	Future Projections for Individual Home Systems	49
IV	HOUSEHOLD PLUMBING FIXTURES TO REDUCE WATER USAGE REQUIREMENTS	52
	Review of Previous Studies	52
	Survey of Plumbing Manufacturers	54
	Faucet Flow Reduction Devices	54
	Water Closets	55
	Urinals	57
	Automatic Clothes Washers	57
	Automatic Dishwashers	59
	Garbage Disposals	59
	Cost Estimates	59
	Water Savings	61
	Cost Evaluation of Plumbing Devices	61
V	POSSIBLE TECHNIQUES FOR IMPROVEMENT OF HOUSEHOLD WASTE TREATMENT	66
	Change of Phase Processes	67
	Liquid to Vapor Phase Changes	67
	Liquid to Solid Phase Changes	69
	Solid to Vapor Phase Changes	70
	Membrane Processes	70
	Reverse Osmosis	71
	Electrodialysis	71
	Electrolytic Processes	72
	Miscellaneous Processes	73
	Oxidation	73
	Chemical-Mechanical Removal of Contaminants	75
	Collection and Storage	76
	Solvent Extraction	76
	Solid Hydrate Formation	76
	Maceration-Disinfection	77

TABLE OF CONTENTS (Cont'd)

Section	Title	Page
VI	ENGINEERING STUDY AND EVALUATION OF PROCESSES FOR WATER CONSERVATION AND WASTE TREATMENT	78
	Preliminary Economic Analysis	84
	Additional Analysis of Proposed Systems	87
	Criteria for a Semi-Quantitative System Evaluation	87
	Evaluation Examples	90
VII	SURVEY RESULTS	108
	Water Saving Faucets and Showerheads	108
	Direct Flush Toilet Valves	110
	Toilets with Separate Flush Cycles for Urine and Feces	110
	Home Urinals	110
	Recycle Toilets	111
	Reuse of Waste Wash Waters	111
	Individual Treatment Systems	111
VIII	CONCLUSIONS AND RECOMMENDATIONS	112
	Conclusions	112
	Discussion and General Recommendations	115
	REFERENCES	118
	ADDITIONAL REFERENCES	127
APPENDIX		
Table A-I	Waste Treatment Manufacturers	131
Table A-II	Plumbing Equipment Manufacturers	132
Table A-III	Cost Data for Liljendahl Vacuum System	133
Table A-IV	Preliminary Cost Comparisons of Alternative Water and Waste Management Systems	135
Table A-V	Questionnaire Distribution	143

TABLE OF CONTENTS (Cont'd)

Section	Title	Page
Table A-VI	Results of the Survey of Homeowners	144
Table A-VII	Results of the Survey of Plumbers	146
Table A-VIII	Results of the Survey of Architects and Engineers	149
Table A-IX	Results of the Survey of Plumbing Equipment Manufacturers	152

SUMMARY

PRESENT WATER SYSTEM REQUIREMENTS

The literature on household water quantity requirements was reviewed and an average household water use pattern postulated. The amount of water used in the various household functions (bathing, cleaning, toilet flushing, etc.) is estimated. The water quantity estimates and the costs associated with using these water quantities are used as the basis for comparison in the evaluation of all the water-saving or waste treatment devices.

The various household water uses are then discussed in relation to the quality of the water required in each use. The quality required is considered from three main points of view: health, aesthetics, and engineering suitability. Water quality standards are suggested for bathing, for general laundering and cleaning, toilet flushing, and for disposal to underground drainage and to surface waters. All uses, except toilet flushing, require a relatively high level of quality to satisfy the health, aesthetic, and engineering criteria. The generally high quality requirements tend to discourage systems with multiple water quality levels. Also, increasing water demands and water reuse will eventually necessitate very strict disposal requirements.

THE WASTE DISPOSAL PROBLEM OF HOMES NOT CONNECTED TO CENTRAL SEWERAGE SYSTEMS

The history of the septic tank problem in the United States is briefly outlined and a review of previous studies on rural and suburban waste disposal problems is presented. Currently available individual waste disposal systems are surveyed and evaluated with regard to the information obtained from the review of previous studies. For most individual waste treatment applications, the anaerobic digestion, soil absorption type system seems most practical. Waste disposal systems that discharge effluent to surface drainage are not considered advisable unless fool-proof safeguards are provided to ensure the effluent quality. Statistics show that individual waste disposal systems are being installed at a decreasing rate. The knowledge gained in the many studies on rural and suburban waste disposal systems and the development of alternative community waste systems have decreased the tendency to rely solely on individual waste disposal. Also, there appears to be a trend away from individual housing and toward apartment-type living units. However, the actual number of individual waste disposal systems being installed and the number of these systems already in use are very large. These large numbers, and the rising water quality standards demand better individual waste treatment; continued study of individual waste treatment systems is essential.

HOUSEHOLD PLUMBING FIXTURES TO REDUCE WATER USAGE REQUIREMENTS

Previous studies concerning the use of water in plumbing devices and home appliances were reviewed, and plumbing equipment manufacturers were surveyed to determine availability of water saving plumbing equipment. Manufacturers, both in this country and abroad, have developed water saving faucets, showers, and toilets. Because of water shortages and higher water costs, some foreign countries have placed great emphasis on conserving water. For example, a vacuum flush toilet has been developed in Sweden, and in the United Kingdom toilets with two flushing cycles and water-saving spray faucets are being used. The feasibility of using the various water-saving devices in the household is evaluated on the basis of cost and water savings.

POSSIBLE TECHNIQUES FOR IMPROVEMENT OF HOUSEHOLD WASTE TREATMENT

The demands for high quality water and the increasing costs of securing and treating water supplies have stimulated the search for better methods of water and waste treatment. The literature on advanced treatment methods was surveyed and the various methods are discussed as to their applicability for household use. Most of the methods considered do not at this time appear suitable for use in individual households. However, changes in economic factors and technical improvements could make some methods attractive for future use.

ENGINEERING STUDY AND EVALUATION OF PROCESSES FOR WATER CONSERVATION AND WASTE TREATMENT

The practicality of using the various schemes of waste treatment or flow reduction in the household are evaluated. An order-of-magnitude cost analysis of the various systems led to the following conclusions:

1. Reduction of water usage appears to be the most economically feasible means of reducing waste flow from the home.

2. Flow control faucets are of marginal value when replacing workable faucets, but are definitely warranted for new homes and for necessary replacements.

3. Flow control showers are an inexpensive means of economically saving considerable quantities of water.

4. The use of pressure flush valves to reduce water flow does not appear as advantageous as the redesign of the toilet bowl to allow adequate flushing with less water. The pressure flush valve could be advantageously used with the redesigned toilet bowl. Siphons, as used in the English water closets, would also provide better volume control than the system presently used in the United States.

5. The vacuum flush toilet for the individual home is too expensive because of the high cost of the accompanying equipment.

6. The major economic disadvantage of the recycle toilets is the high cost of the chemical used for disinfecting the recycled flush water. Development of a suitable, lower cost disinfectant could make their use much more practical. There could be a problem with acceptance of reused flush water in the home, but this objection does not appear insurmountable.

7. Incinerator toilets are excessively costly to operate and maintain for family use. For certain applications, such as weekend cabins which are used sporadically, the incinerator may be the most economical system, but for normal continuous use, the incinerator toilet cannot economically compete with conventional systems.

8. The analysis of the system to reuse wash waters for toilet flushing reveals several very significant facts. The treatment and the quality standards required for flushing water are minimal and the costs are thus relatively low in comparison to those for any other reuse. Yet this treatment and reuse is economical in only fair and poor soil areas.

9. The additional treatment of the non-sanitary waste waters by distillation, reverse osmosis, or a multifilter system for use as laundry and bathing water as well as toilet flushing does not appear economically feasible.

10. The treatment of all waste waters by distillation, and reuse for all purposes except drinking is also economically unattractive.

11. Aerobic treatment is competitive with anaerobic systems in poor soil areas. In such poor soil areas some reuse may also be warranted.

12. Electrolytic treatment for disposal is not economical for most areas because of the low conductivity of the water.

Based on these observations, the systems that warrant further consideration are the various means of restricting water usage, reuse of wash waters for toilet flushing, and the use of aerobic treatment systems in poor soil areas with the possibility of treating and reusing portions of the aerobic effluent.

Criteria suitable for a more detailed evaluation were chosen and discussed. Examples, using these evaluation criteria with several of the water saving and waste treatment systems, are also presented.

SURVEY RESULTS

A postal survey of homeowners, architect-engineers, plumbers, and plumbing equipment manufacturers was conducted to obtain representative reactions from the people who would control the actual use of any schemes for reducing water usage or improving waste treatment and to ensure that the opinions formed from the literature survey were not contrary to popular practice or beliefs.

The response to the survey was relatively good as 387 homeowners, 40 plumbers, 29 architect-engineers, and 8 plumbing equipment manufacturers, representing 50% of the equipment manufacturers contacted, 52% of the homeowners, 21% of the architect-engineers, and 18% of the plumbers, filled out and returned the questionnaires.

The survey indicated that water-saving faucets or shower heads and direct-flush toilet valves are the most acceptable water-saving devices.

Septic tank, soil absorption systems are by far the most common household waste treatment system. Although 67% of the maintenance schedules reported by the homeowners were inadequate according to the recommendations of the Public Health Service "Manual of Septic Tank Practice", most homeowners were pleased with the performance of their treatment systems.

I

INTRODUCTION

BACKGROUND

The practice of water reuse is not new or even recent. The water supply on the earth is constant and water reuse dates to the beginning of recorded history. Distillation, membrane processes, and freezing techniques which have occurred naturally for millions of years are being developed into artificial systems capable of producing pure, drinkable water from waste waters. Devices are already available to treat the waste water on space vehicles so that water can be reused. In some water-short areas, water from the ocean is being economically reclaimed through distillation, and work is rapidly progressing in the development of freezing techniques and in membrane technology.

Unfortunately, these processes are only now approaching practical, usable status for everyday application, whereas water shortages have plagued cities and industries for centuries. In areas where water has not been plentiful or not easily obtained various techniques have been developed to permit reuse of water or to relieve shortages simply by using less water. Some Asian peoples combated water shortages by an almost complete, though primitive and hygienically dangerous, reuse of their meager water supply. The rainfall occurring in the wet season was collected in open ponds from which water was carried by hand for household use. To conserve the supply, all cleaning and washing were done in the pond and household wastes were dumped back into it.

In Chanute, Kansas, during a critical drought in 1956 and 1957, effluent from a biofiltration plant was diluted with available river water and treated for municipal use. Sewage provided a considerable portion of the water supply for several months, but there were no reports of physiological ill effects on the population (17).* Many industries which have located in water-short areas, for example, Kaiser Steel at Fontana, California, have found that processing techniques could be designed to reduce the use of water. Other companies, such as Bethlehem Steel near Baltimore, Maryland, have solved their own water problems and helped to alleviate pollution problems by the treatment and reuse of sewage plant effluent. Tourist facilities at the Grand Canyon have reused effluent from their waste treatment plant for toilet flushing and for lawn irrigation since 1925. In several coastal areas such as Long Island, New York, and Southern California, treated waste water is injected into the groundwater reservoirs to prevent intrusion of salt water as the fresh water table is lowered by pumping. At Santee, California, and in the Golden Gate Park, San Francisco, California, extensively treated waste water is being used to irrigate parks and to supply recreational lakes. In many parts of the world, various schemes

*Numbers in parentheses refer to the list of references, pp. 118-126.

for reusing treated waste water industrially are already in use; in South Africa and Israel, reuse for the domestic water supply is also planned.

Implementation of advanced treatment processes and water reuse depend on the development of better systems for collection of wastes and distribution of the treated water. Cities will have to be more comprehensively planned so that urban sprawl, with its disproportionate amount of piping, pumps, and accessories for proper service, will be controlled. The increasing world population and the fixed supply of water and fuel make such planning essential for future growth. Water conservation and the reuse of partially treated water is destined to become increasingly important in the task of supplying adequate water to the growing world population.

PRESENT STUDY

This study examines the feasibility of applying the principles of water conservation and reuse of partially treated water to the household, not only to stretch the limited water supply, but also to provide a transition into the approaching era of complete water reuse with the corresponding high level of water conservation necessitated by higher costs of water treatment.

The various uses of water in the typical home are studied in an attempt to find methods of reusing partially treated water and changing present home practices which use water needlessly or wastefully. The amount of water that can be potentially saved in a single household may be relatively small, but even small decreases in the daily per capita water use and waste discharge can result in large cumulative decreases in costs at the municipal water and sewage treatment plants. Besides savings in operating costs for water and sewage treatment, the decreased usage would delay the need for the construction of new waste treatment facilities, for construction of larger sewer lines and water mains, and for the development of new water supply sources which are becoming increasingly scarce and costly.

This study also examines the special problems of households not connected to central sewerage systems which must depend on individual treatment units for the disposal of their wastes. Owners of individual treatment units are faced with the need for better treatment of wastes to prevent pollution of recreational waters, and to protect their own or their neighbor's individual water supply. Economical reduction of waste discharges would facilitate treatment, decrease pollution, and ease the demands on an often limited water supply for home owners in areas without municipal water or sewerage.

This study is divided into six major tasks designed to analyze the need for water conservation and reuse schemes and to survey and evaluate available techniques of meeting these needs. These six tasks are listed below:

1. Conduct a study and engineering evaluation of possible changes in household plumbing fixtures to reduce water usage requirements, and hence reduce the flow of waste water from households. (Section IV)

2. Conduct a study of the magnitude of the waste disposal problem from homes not connected to central sewage systems. (Section III)

3. Study and evaluate effluent quality criteria (standards) for individual home treatment systems. (Section II)

4. Survey and evaluate equipment currently marketed for individual home treatment systems. (Section III)

5. Conduct a comprehensive study and evaluation of treatment processes that indicate promise for individual home applications. (Sections V, VI)

6. Select the most promising treatment systems for individual home application. (Section VIII)

II

PRESENT WATER SYSTEM REQUIREMENTS

Water's most essential function is sustaining life, but this country fortunately has such bountiful water supplies that the greatest water use in our modern households is for removing wastes. We rinse away food wastes from our dishes, the soil from our homes, our cars, our clothes, and our bodies. We use additional gallons of water to flush away sanitary wastes.

As the population increases and our water supplies become more critical, it may be prudent to decrease the amount of water used in essential tasks. This probable need for changes necessitates an examination of the different household water uses and the problems associated with changing any of the common practices or the appliances associated with the present water uses. This section discusses household water requirements with regard to both quantity and quality.

WATER QUANTITY REQUIREMENTS

Because of the importance of water quantities in the planning of water and waste treatment facilities, the literature contains many design estimates for the daily per capita water use. These estimates are usually presented as the quantities needed for treatment plant design and include leakage into and out of pipes as well as miscellaneous non-household uses. Relatively few reports have been published on actual water usage in individual households and the distribution of the water among the various uses. One report (reference 65A) from the National Swedish Institute for Building Research arrived too late to be fully evaluated and included in this study, but excerpts from several of the tables are included for general information. This report appears to contain a wealth of information on the quality and quantity of household waste waters, however the differences between United States and Swedish water use must be determined before the data can be used directly. Available reports show that per capita water use varies widely with the standard of living, the climate, personal habits, and the number of persons per dwelling unit. The actual amount of water (not including lawn sprinkling) varies from less than 20 to more than 100 gallons per capita per day (gpcd). The figures most widely reported are between 40 and 80 gpcd. In a study of 18 homes (97) the average daily water use per person varied from 20 to 70 gallons and averaged 44 gallons. Public Health Service studies to develop design criteria for soil absorption systems, revealed that the average daily water use was 56 gallons per person. The Public Health Service study also cited the results of an extensive water use study in Bethlehem, Pennsylvania which showed the average use to be 48 gpcd (86). A study at Johns Hopkins University also indicated an average per person use of 56 gpd (49). Both the study at Johns Hopkins and the study by the Public Health Service indicated that gpcd water use was inversely proportional to the

number of persons per dwelling unit. The Public Health Service found that the statistical average water use (not including lawn sprinkling) fit the formula $Q = 88 + 26 P$, where Q is the daily gallons of water used per household and P is the number of persons per household.

The water delivered to the households is divided among the various uses in a different manner in every household. A few of the published estimates of water use quantities are listed below.

Household Water Uses (39)

Type of Use	Percentage
Toilet flush	45
Bathing	30
Kitchen	6
Drinking	5
Laundry	4
Cleaning	3
Sprinkling	3
Auto washing	1
Miscellaneous	3

Estimated Potable Water Use (39)

Type of Use	Quantity Used (gpcd)
Drinking, Cooking	1-2
Dishwashing	1-4
Garbage disposal unit	0-4
Laundering, cleaning	3-7
Bathing	10-25
Total	15-42

Estimated Distribution of Sewage (90)

Waste	Volume of Waste, gpcd				
Tot. flow, (gal.)	30	40	50	75	100
Kitchen wastes	0	7	10	10	15
Toilet wastes	15	15	20	25	30
Showers, wash basins, etc.	15	18	20	25	35
Laundry wastes	0	0	0	15	20

Toilet Flushing (Family of Four) (14)

Day of Week	Water used for toilet flushing % of total daily intake
Monday	44.7
Tuesday	66.9
Wednesday	47.0
Thursday	61.5
Friday	61.9
Saturday	68.5
Sunday	74.4

G. W. Reid (73) published the following estimate for the use of water in the home of an average family of the future consisting of four members in a house with two bathrooms, a garbage disposal, a dishwasher and an automatic washer:

Item	Daily Family Use, gal.	Daily per Capita Use, gal.
Drinking and Kitchen	8	2.0
Dishwasher	15	3.75
Toilet	96	24.0
Bathing	80	20.0
Laundering	34	8.5
Autowashing	10	2.5
Lawn watering	100	25.0
Garbage disposal unit	3	0.75
Total	346	86.5
All uses except toilet and lawn watering	150	37.5

Waste Water Flows (65A)

Source	gpcd	
Kitchen	13.5	
Showers and lavatory	16.4	
Laundry	2.3	
Toilets	7.	(vacuum toilet 5 flushes)

For the purposes of a standard basis throughout this report, the above data and judgment factors were used to fabricate a "model" home with an "average" family which uses and disposes of water in the "average" way. The home and the values used for water consumption are believed to be typical of a normal family; however, even if the values used are not exceedingly close to reality, they will serve as a standard of comparison to which all schemes for waste treatment or reduction of waste flow can be compared.

The "average" home used as a standard is a three bedroom structure with 1-1/2 bathrooms, having a shower and tub or a shower-tub combination, and a basement or storage room where additional equipment could be installed if necessary. The home has an automatic washing machine and probably a dishwasher and garbage disposal unit. The "average" family occupying this "average" house will consist of two adults and two children who will use water in the "average" way.

The use patterns in this "average" home were assumed to be in accordance with the studies by the Public Health Service and Johns Hopkins University which indicated certain household water using functions are relatively independent of the number of household occupants. Examples of such functions are laundering, dishwashing, and cleaning. The amount of water used for cleaning walls, floors, and fixtures depends primarily on the size of the surface cleaned. Whether done by hand or by automatic dishwasher, the amount of water used for dishwashing is more directly related to the number of times dishes are washed than to the amount of dishes washed. A similar situation occurs with the laundry. White goods, colored goods, and special materials all have to be laundered separately. For small families this often means doing a load of washing for a few articles in the amount of water that would normally be used for a larger load.

In the "model" home, the water for these household uses has been set at 55 gallons per day: 15 gpd for dishwashing, 35 gpd for laundry, and 5 gpd for miscellaneous cleaning. The water required for personal uses is set at 50 gallons per day per person: 3 for drinking and cooking, 20 for bathing, 2 for oral hygiene, and 25 for toilet flushing. Most of the household water and probably at least 75% of the bathing water will be heated.

For the purposes of comparison the following assumptions were made: (1) $0.42 per thousand gallons, (2) an additional cost of $0.67 per thousand gallons of water heated, and (3) a waste water disposal cost of $0.44 per thousand gallons (municipal sewerage). The schematic diagram of the "model" home with the corresponding "average" water uses is shown in Figure 1.

WATER QUALITY REQUIREMENTS

Introduction

This section discusses water criteria and standards: (1) for various household applications and (2) for disposal to underground drainage or to surface waters.

To significantly reduce total household wastewater flow without relinquishing the conveniences of modern plumbing and appliances, wastewater treatment and reuse systems must be considered. However, before treatment requirements for reuse can be determined, standards of water quality needed for the various household uses must be established. Although optimum limits of water quality could be established for each use in a household, simplicity in plumbing and treatment equipment together with the fact that water from any supply point in a household is used for many things, dictates that the number of classes of water quality and the corresponding separate piping systems involved be kept to a minimum.

A new household wastewater system could result in the discharge of a smaller volume, but a much more concentrated final effluent. For that reason, standards of effluents for final disposal are also discussed.

Water quality must be considered from three main points of view: health, aesthetics, and engineering suitability. Table I lists some general aspects to consider in each category. In household water systems health is of prime importance. However, health hazards may be eliminated in many cases merely by disinfection.

It has been said that public policy should never compromise on public health issues, and that the proper philosophy for public water supply planning should not be to take any available water source and by treatment make it safe for human use, but rather to take the best supply available and by treatment make it better. Unfortunately, the demands of modern life in an industrialized nation seldom permit so simple and categorical an approach. For example, it is economically and technically impractical to achieve sterility in public water supplies and human foodstuffs, but experience has shown that the arbitrary standards of sanitation now employed reduce public health risks to a minimal level.

Actual health risks are not the only factor, however. Personal habits and current social customs may affect water conservation and reuse schemes at least as much as the technical limits required for health considerations and engineering feasibility. For example, water must have an acceptable appearance and odor even for such low-level tasks as washing floors.

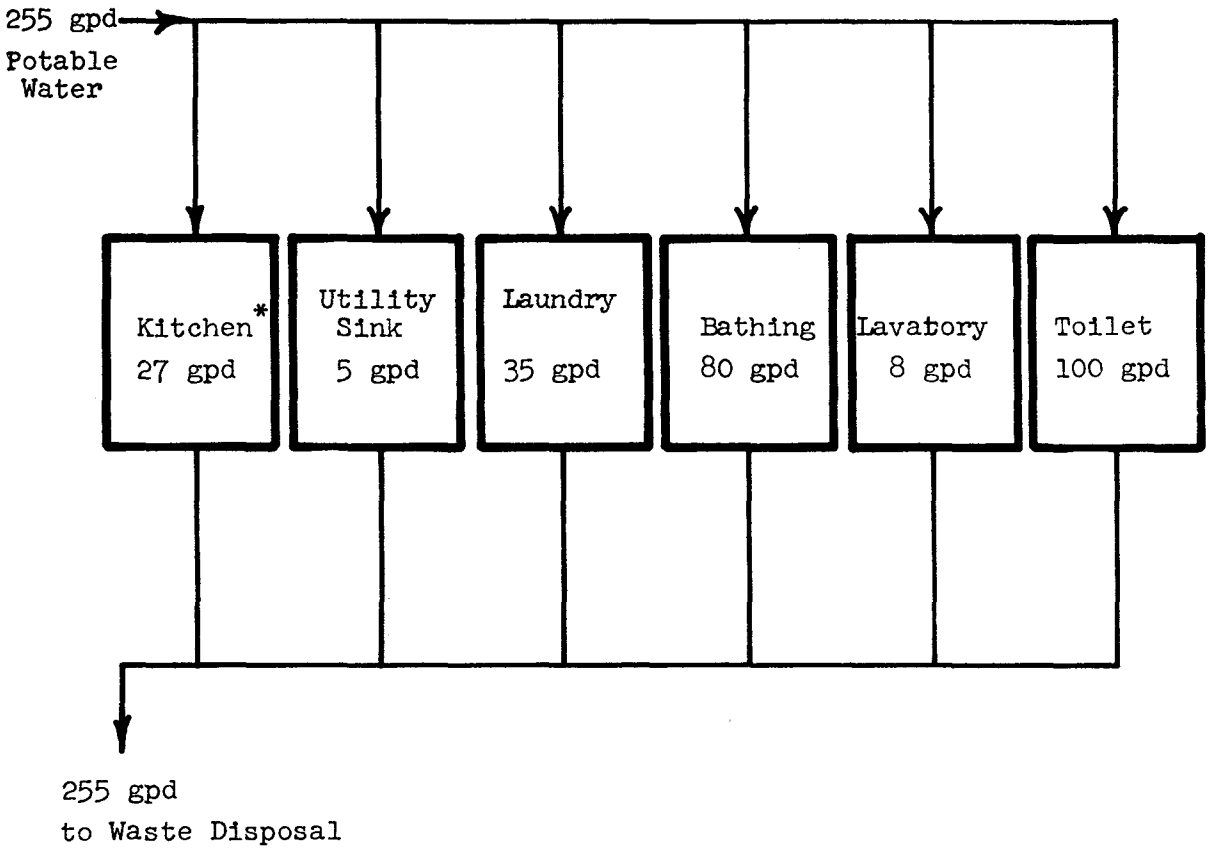

*dishwashing	15 gpd
drinking, cooking	12 gpd

Figure 1. Average Household Water Requirements for a Family of 2 Adults and 2 Children

Table I. Aspects of Water Quality

1.	Health	Chemical quality	
		Microbiological quality	
2.	Aesthetic	Taste	
		Odor	
		Appearance (color and turbidity)	
		Temperature	
		Chemical Qualities (staining)	
3.	Engineering	Corrosiveness	Chemical Content
		Hardness	
		Salinity - Metallic Deposits	
		Abrasiveness	
		Settleable Solids	Turbidity
		Colloid content	
		Temperature Requirements	
		Volume Requirements	

Specific quality requirements for various uses are discussed on subsequent pages. The following figures and tables show the spectrum of household water uses that helped dictate the quality requirements specified. Figure 2 shows a schematic of a typical plumbing system and table II shows the water uses at the various supply points.

Quality Standards for Household Uses

The U. S. Public Health Service has developed water quality standards designed to insure a product satisfactory for all the uses that commonly occur in the household, including drinking, cooking, cleaning, home gardening, and use in heating systems (71). This report uses these water quality standards as the basis of the quality standards for particular household uses. For all purposes related to drinking and cooking, these standards must be rigidly maintained; in this study it is assumed that all drinking and cooking needs will be provided from an acceptable drinking water supply. For most other purposes, certain of these contaminant limits can be relaxed without increasing health hazards or decreasing the suitability of the water for the particular purpose. In all cases, however, the bacterial limits will be maintained to guard against disease and infection; therefore, only chemical and physical standards will be discussed in the following sections.

Bathing Water Standards

Substances injurious to the skin should not be allowed to accumulate in water reused for bathing. For this reason, a pH range is specified for bathing waters. The range of 6.5 to 8.3 was recommended by the National Technical Advisory Committee (NTAC) Report (95) for bathing water standards in order to prevent eye irritations. The physical limits on color and odor should be maintained for aesthetic suitability. Turbidity limits may be relaxed slightly. Limits on the organic contaminants detected by the carbon chloroform extract should be adhered to in order to prevent odor and possible health problems. The chemical limits on cyanide and the heavy metals listed in section 5.22 of the drinking water standards should be maintained because of body contact and the possibility of ingestion, especially by small children. Limits recommended for total dissolved solids in bathing water of 1500 mg/1 are three times the drinking water standards, but well within the range of useful, naturally occurring waters. Hardness limits of 100 mg/1, twice the drinking water standard, are considered reasonable for this use.

Limits on some of the other chemicals can also be somewhat relaxed. The ABS concentration for drinking water is limited to 0.5 mg/1 to prevent frothing problems, but frothing is less objectionable in bathing water than in the drinking supply. Frothing is still very light in concentrations up to 1 mg/1 and this limit is recommended. For drinking, chlorides and sulfates are each limited to 250 mg/1. The chlorides are limited to prevent a salty taste and the sulfates to prevent a cathartic reaction in consumers. Since the water is not to be consumed, the limit of either can be set higher for actual bathing purposes. The requirements of the hot water heating

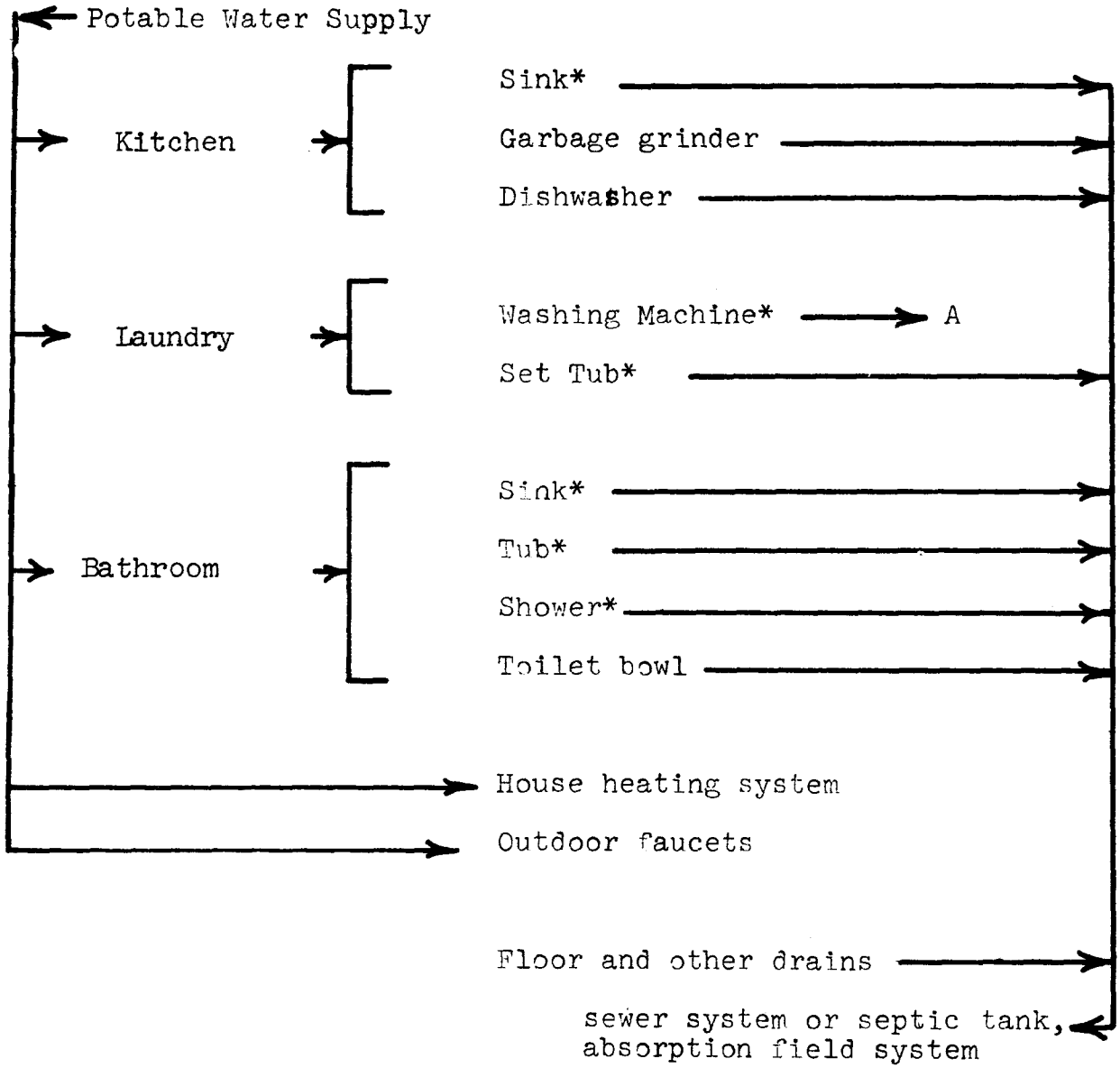

A - Separate Dry Well (forbidden by many local codes)

* - Part of water via hot water heater.

Figure 2. Home Water and Waste Flow Pattern

Table II. Home Water Uses At Various Supply Points

Kitchen

Sink

Drinking
Cooking
Washing - food and equipment
Bathing
Household cleaning
Garbage grinding
Dishwashing - automatic or hand

Laundry

Automatic, Semi-Auto, or Hand

Bathroom(s)

Sink

Drinking
Bathing, toothbrushing
Household cleaning

Toilet - sanitary transport

Shower - Bathing

Bathtub - Bathing

Household cleaning
Occasional Drinking

Heating System

Hot Water Supply

House Heating System (Steam or Hot Water)

Outside Faucet(s)

Lawn and Garden Watering

Car Washing

Pet Washing

Sprinkling Children

Supply to Wading and Swimming Pools

Miscellaneous Cleaning

Occasional Drinking

and piping system, however, limit the combined level to 1500 mg/1. Fluoride levels could be increased to 3 times the values established for drinking. Copper and zinc limits can be doubled with no problem other than a bitter taste which would probably serve a useful purpose by discouraging drinking. Iron levels can also be raised above the 0.3 mg/1 level recommended to prevent taste. It has been recommended that a combined iron and manganese level of 1.0 mg/1 would be sufficient to prevent staining in laundry applications (54). Maintaining a 0.05 mg/1 limit for manganese avoids stains and bacterial growth. Nitrate levels as high as 90 mg/1 should be permissible. The limit of 45 mg/1 (as NO_3) was set to prevent methemoglobinemia in infants fed on formula made with high nitrate waters, but surely no infant young enough to be affected by the high nitrate levels would be given the opportunity to drink even a small amount of bath water, let alone the large quantities required for toxic effects. Significant concentrations of phenols are unlikely to appear in household drainage systems, but concentrations in the bathing water of several times the drinking water limits would cause no problems. The suggested standards for bathing purposes are shown in table III.

General Washing and Cleaning - For general household cleaning and laundering, standards can be further relaxed. The physical standards should still be maintained to make the water aesthetically acceptable to the housewife. Limits on the solids concentrations also must be maintained because of the requirements for heating the water and the fact that water with high dissolved solids will leave deposits on evaporation. The chemical concentration of the other substances can be substantially increased for household cleaning and laundry without increasing the concentrations above the levels normally found in the water to which cleaning and laundering solutions have been added.

Some of the substances will of course linger, on cleaned clothes, for example; but any increase in concentration level will be unnoticeable and non-toxic to children who occasionally chew on their clothes. Chromium levels of 1.5 mg/1 are recommended as permissible for washing and cleaning. Little physiological danger exists even from quite high chromium levels (54). The taste and odor threshold level of chromium are 1.4 mg/1, and the possibility of minor coloration or taste is not deemed unacceptable for this use. Phenol levels of 0.01 mg/1 are 10 times the USPHS (71) drinking water standards. High taste levels make ingestion of dangerous quantities of phenols unlikely. Odor thresholds of phenol in chlorinated water have been reported to range from 0.00001 mg/1 to 0.20 mg/1. The level of 0.01 mg/1 phenol is a reasonable compromise between chance of unpleasant odor and treatment requirements. Although a pH of 6.0-6.8 is recommended for laundry purposes, (54), attempting to achieve such an ideal is unrealistic for home use; the wider range of 6.0 to 8.3 will be acceptable for home laundries. The suggested quality criteria are listed in table IV.

Table III. Suggested Bathing Water Standards

Physical Characteristics	
Turbidity	10 units
Color	15 units
Odor	3 units

Chemical Characteristics	Concentration mg/1
Alkyl Benzene Sulfonate (ABS)	1.0
Arsenic (As)	0.05
Barium (Ba)	1.0
Cadmium (Cd)	0.01
Chloride (Cl)	500.0
Chromium (Cr)	0.05
Copper (Cu	2.0
Carbon Chloroform Extract (CCE)	0.2
Cyanide (CN)	0.2
Fluoride (F)	6.0
Iron (Fe)	1.0
Lead (Pb)	0.05
Manganese (Mn)	.05
Iron and Manganese	1.0
Nitrate (NO_3)	90.0
Phenols	0.005
Selenium (Se)	0.01
Silver (Ag)	0.05
Sulfates (SO_4)	500.0
Total Dissolved Solids (TDS)	1500.0
Zinc (Zn)	10.0
pH	6.5-8.3
Hardness	100.0

Table IV. Suggested Standards For General Washing and Cleaning

Physical Characteristics		Concentration mg/1
Turbidity	10 units	
Color	15 units	
Odor	3 units	
Chemical Characteristics		
Alkyl Benzene Sulfonate (ABS)		2.0
Arsenic (As)		0.05
Barium (Ba)		1.0
Cadmium (Cd)		0.01
Chloride (Cl)		500.0
Chromium (Cr)		1.5
Copper (Cu)		2.0
Carbon Chloroform Extract (CCE)		0.4
Cyanide (CN)		0.2
Fluoride (F)		6.0
Iron (Fe)		1.0
Lead (Pb)		0.05
Manganese (Mn)		.05
Iron and Manganese		1.0
Nitrate (NO_3)		180.0
Phenols		0.01
Selenium (Se)		0.01
Silver (Ag)		0.05
Sulfates (SO_4)		500.0
Total Dissolved Solids (TDS)		500.0
Zinc (Zn)		10.0
pH		6.0-8.3
Hardness		100.0
Alkalinity		60.0

Lawn and Garden Irrigation - Standards for irrigation are less exacting than for household uses. Untreated sewage has successfully been used for crop irrigation, and there have been no reports of plant damage by the materials in domestic sewage. However, the use of untreated sewage on land where human food crops are grown is not recommended.

There have been reports of typhoid and ascaris worm infection caused by sewage treated crops, and harmful organisms have been found in vegetables from sewage irrigated soil. Since all water should be made biologically safe for accidental ingestion, this should be no problem. The tourist facilities at the Grand Canyon have used waste water from an activated sludge plant, followed by polishing with anthracite coal filters and chlorination for toilet flushing and lawn watering for more than thirty years (36).

The use of an individual household effluent for irrigation purposes, however, would require closer supervision to prevent possible plant damage, since the dilution of harmful contaminants by the sewage from other homes would not be possible. Boron, for example, can cause plant damage in very low concentrations. Tolerance ranges run from 0.5 to 1.0 mg/1 for slight to moderate damage for sensitive crops, 1.0 to 2.0 mg/1 for semi-tolerant, and 2.0 to 4.0 mg/1 for tolerant crops. As borates are frequently a constituent in household cleaners, it is conceivable that these concentrations could be occasionally exceeded in wastewaters.

The effects of various concentrations of surface active agents in irrigation waters has not been extensively studied, but, in general, surfactants are not considered beneficial. Foams may be produced at low concentrations (0.7 mg/1) and may prove offensive in a sprinkler system. Non-biodegradable detergents could also pollute ground water if applied to a lawn and garden in sufficient quantities. Limits are therefore recommended for surfactant substances for lawn irrigation.

Sulfates in high concentrations are reportedly injurious to plants; 200 mg/1 is recommended as a standard for irrigation waters by McKee and Wolf (54). They quote a 576 mg/1 limit as permissible, and recommend a 500 mg/1 limit for domestic water supplies. It is therefore recommended that 500 mg/1 be allowed as a limit for lawn irrigation and outside faucet uses.

The limit for copper at the 1.0 mg/1 level of the USPHS standards is retained. McKee and Wolf recommended 0.1 mg/1 for irrigation, but this is a secondary use for water in a household system and it is not necessary to improve on the basic water supply for this purpose.

For irrigation a level of 0.5 mg/1 manganese is permissible.

Chloride must also be limited to a level of 500 mg/1 for lawn irrigation. A lower limit would be better, but this level is not infrequent in some areas. Phenol levels of up to 50 mg/1 have been found to be acceptable for irrigation (54). However,

at these levels strong odors exist. Considering the multiple uses of domestic lawn irrigation water, a phenol limit of 0.05 mg/1 is recommended. This level will create taste in a chlorinated water, but the limit is below the danger level, and taste will help discourage accidental ingestion. Other compounds, such as nitrates which have fertilizer properties, could be further increased, but the stipulation of water not harmful for accidental ingestion suggests limits for these compounds similar to the values used for wash waters. The suggested standards for irrigation are shown in table V.

Toilet Flushing - For toilet flushing, the main requirement of the water is to carry away the wastes. Water is usually the most convenient and economical liquid to use, but under extreme conditions other fluids have served the purpose; for example, fuel oil was used to convey wastes in an arctic installation and then burned along with the waste for fuel. Recently, several attempts have been made to reuse waste waters for flushing toilets. Stored wastewater from laundry and shower has been used successfully for toilet flushing with no treatment other than filtration (55). Detergents caused no foaming problem and the slight gray color was not found objectionable. As mentioned in the previous section, treated wastewater is used for toilet flushing at the Grand Canyon. The use of aerobic treatment effluent for toilet flushing in individual homes was studied at the Ontario Research Foundation in Canada (15).

Commercial jet aircraft use a recycle system in which recycled waste water (filtered, colored, and disinfected) is used for flushing. The use of a dye colored water for this purpose is apparently accepted by the public.

Reasonable criteria for toilet flushing are minimum odor, minimum staining properties and prevention of serious health hazards. Acceptance of color and turbidity is dependent on public education. It is probable that housewives in a community with normal city water would be offended by a reuse system. The reuse system reported by McLaughlin (55) was used in the home of the writer, and therefore the quality of the water was not questioned as it might have been by an uninvolved housewife, nor was the system taxed by introduction of unusual substances through the laundry and shower as it occasionally might be during normal usage.

Levels of 1.0 mg/1 ABS have been reported to cause foaming under favorable circumstances but concentrations of synthetic detergents were probably higher than this in McLaughlin's system and were reported to be no problem. Of course, excessive foaming should be avoided.

Manganese, iron, and copper limits may be imposed to prevent staining. In the studies at the Ontario Research Foundation, this problem was avoided by using a black toilet bowl which didn't show the stains (12). However, this solution may not be accepted by the public because of failure to blend with bathroom decor. The

Table V. Suggested Irrigation Water Standards

Physical Characteristics	
Turbidity	10 units
Color	15 units
Odor	3 units

Chemical Characteristics	Contamination in mg/1
Alkyl Benzene Sulfonate (ABS)	1.0
Arsenic (As)	0.05
Barium (Ba)	1.0
Cadmium (Cd)	0.01
Chloride (Cl)	500.
Chromium (Cr)	0.05
Copper (Cu)	1.0
Carbon Chloroform Extract (CCE)	0.4
Cyanide (CN)	0.2
Fluoride (F)	6.0
Iron (Fe)	1.0
Lead (Pb)	0.05
Manganese (Mn)	0.5
Iron and Manganese	1.0
Nitrate (NO_3)	180.0
Phenols	.05
Selenium (Se)	0.01
Silver (Ag)	0.05
Sulfates (SO_4)	500.
Total Dissolved Solids (TDS)	1000.
Zinc (Zn)	10.0
Boron (Bo)	1.0

necessity of treating flushing water to limit staining may impose economic and physical constraints that would limit the scope of any reuse system. The extent of this problem would depend on the degree of reuse, the number of use cycles before disposal, and the concentrations of staining agents.

The desirability of adding disinfectants to the flushing water will depend on the system. Disinfection was not considered necessary for McLaughlin's wash water reuse system, but the effectiveness of the detergents and bleaches in reducing bacterial populations should be investigated. Bacterial counts for the system reusing aerobic treatment effluent were high, but the addition of disinfectants would disrupt the treatment system. Therefore in this type of system bacterial kill without a residual effect (heat, radiation, or ozone for example) will be required.

The suggested standards for toilet flush water are given in table VI.

Effluent Quality Requirements for Disposal

Criteria promulgated by the USPHS (90) specify that human and domestic wastes be disposed in such a way that:

1. They will not contaminate any drinking water supply.
2. They will not give rise to a public health hazard by being accessible to insects, rodents, or other possible carriers which may come into contact with food or drinking water.
3. They will not give rise to a public health hazard by being accessible to children.
4. They will not violate laws or regulations governing water pollution or sewage disposal.
5. They will not pollute or contaminate the waters of any bathing beach, shellfish breeding ground, or stream used for public or domestic water supply purposes, or for recreational purposes.
6. They will not give rise to a nuisance due to odor or unsightly appearance.

There are, however, no quantitative standards which household effluents, as such, must meet. Normal, generally acceptable disposal methods now include public sewerage systems and individual under ground disposal systems. This section discusses criteria and standards applicable to household effluents for discharge to ground waters, surface waters, and storm sewers.

Estimates of water used in various household appliances and released to drains vary widely. Total wastewater volume from three homes studied (97) ranged from less than 20 to 195 gpd per person. Since wastewater volume varies so widely, the concentration of specific pollutants will also vary widely. A list of normally

Table VI. Suggested Toilet Flushing Water Standards

A. Physical Characteristics

Turbidity	20 units
Color	30 units
Odor	6 units

B. Tentative Limits of Staining Agents

Mn	0.5 mg/1
Cu	1.0
Fe	1.0
Fe + Mn	1.0

C. Disinfection may be Desirable

occurring potential pollutants found in household drains is given in table VII. Although typical concentrations of these substances are quite low, actual concentration may intermittently reach dangerous levels relative to potential reuse with minimal treatment. A system ensuring that all wastewater is subject to a minimum dilution must be used even when reuse is only for lawn irrigation.

Effluent Quality for Release to Ground Water - The prime basis for the design of individual underground disposal systems is that they should have a long life without failure. In practice, failure can be defined simply as refusal of the system to accept waste, resulting in blocking of plumbing facilities or appearance at the ground surface of objectionable fluids. Although much work has been done on the design, installation, and maintenance of septic tank and seepage bed systems to ensure long life without failure, studies of the state of effluent fluids leaving the immediate seepage area are sparse, and their results are inconclusive. However, certain standards of effluent quality are implicit in the codes for underground disposal systems.

Primarily, in the household septic tank system, anaerobic digestion takes place in the septic tank, and a clarified fluid effluent is released to aerobic percolative filtration through at least four feet* of the soil absorption system. Accordingly, after the anaerobic septic tank environment, and the aerobic soil percolation coupled with mechanical filtration effects, water reaching the ground water table from a household septic tank and absorption field operating as designed should be pathogen free, and should contain only minimum amounts of organic substances, ammonia, etc. Thus, the construction requirements for soil absorption systems (particularly requirements regarding location with respect to rock ledges and the water table) are necessary to protect the ground water supply, as well as to insure good operation.

Nitrates, however, which are the normal end products of aerobically digested nitrogenous organic matter, are not removed from deep ground waters by plant life. Thus, water percolating from cesspools and leaching fields can cause dangerous concentrations of nitrates in individual water supplies. Nitrates (the cause of methemoglobinemia) are toxic to infants at concentrations which are harmless to older children and adults. Nitrate concentrations up to 40 mg/1 have been found at a distance of 20 feet from a septic tank disposal field (70). Water containing a combined nitrate plus nitrite level of 45 mg/1 is considered unsafe for the preparation of baby formulas or other bottle feeds. The septic tank code specifications for distance between disposal field and water supplies are intended not only to insure adequate filtration but also to allow for some dilution of wastes not removed.

---

*This figure (4 feet) is derived from the geometry of absorption fields as recommended by the Manual for Septic Tank Practice [90].

Table VII. Potential Household Pollutants

KITCHEN

Sink

Dishwashing Debris - detergents, soaps, greases, food and beverage leftovers, any substance deposited on dishes.

Drain Cleansers

Oven Cleaners

Household Chemicals - Bleaches, ammonia, polishes, floor and furniture waxes, solvents, ink, insect sprays.

Body Soil and Wastes - Sputum, vomitus, etc.

Any liquid or semi-liquid substances found in household.

Dishwasher - Dishwashing debris.

LAUNDRY

Detergents, bleaches, soaps.

Soil from clothing (may include small amounts of any household substance).

BATHROOM

Sink - All substances listed under kitchen sink except dishwashing debris

Toothpaste, saliva, naso-pharyngeal mucus

Body soil - (anything washed from body)

Tub and Shower - All substances listed under kitchen sink except dishwashing debris, body soil, urine, occasionally - vomitus, feces

Toilet - Sanitary Waste

Any liquid found in household and solids small enough to be flushed.

ABS and similar refractory synthetic detergents are extremely persistent in ground water. Their use, however, is decreasing, and biodegradeable substances are taking their place, reducing the magnitude of this problem.

In summary, explicit standards for wastewaters released to ground waters by individual underground disposal systems cannot be specified; requirements will differ in each area. Even the best septic tank soil absorption systems will allow significant concentrations of nitrates to develop in ground water. However, well designed systems of sufficient capacity in relation to loading will prevent pathogenic bacteria and most other contaminants from reaching the ground water table.

Extensive treatment is usually required to enable the water to enter the ground water reservoir. Deep wells for the injection of renovated municipal waste water are planned along the south shore of Long Island. These will reduce ground water draw-down and provide a hydraulic barrier against sea water encroachment. In that area, 27 mgpd of treated wastewater will replace the fresh water now lost in outflow toward the sea (83, 84). The injected waters will conform to the USPHS drinking water standards and to other standards to ensure injectability. Degassing and removal of other constituents which might prevent continued injection will be practiced.

For disposal of wastes to the underground, standards similar to a Pennsylvania regulation are recommended. This regulation prohibits underground disposal except in such cases where it can be demonstrated that no conditions prejudicial to the public interest will result (54). This inherently requires that water reaching ground water reservoirs must at least meet drinking water standards.

Effluent Quality Criteria for Release to Surface Waters and Storm Sewers - Water pollution in the past few years has engendered public demand for stricter surface water standards. Recommendations of various groups, and legislation resulting from these recommendations, are trending toward controls that preserve and enhance the quality of water resources. Although there is some argument for the use of surface waters for waste transport and treatment, this aspect of stream employment is receiving less favor.

The Suggested State Water Pollution Control Act, Revised (1965), of the Federal Water Pollution Control Administration, has the provision as a statement of policy "that no waters be discharged into the waters of the state without first receiving the necessary treatment or other corrective action . . . to provide for the prevention, abatement and control of new or existing water pollution".

In some states, the standards refer to the effluents before discharge into the receiving stream. In others, the standards refer to the streams after having received effluents. In general, at least secondary treatment of wastes (viz., chemical, physical or biological treatment in addition to gravity separation of solids) is required in accordance with federal policy.

Storm sewers, when they discharge into streams, are regulated similarly to other sources of pollution. Most legal restrictions are directed toward "sanitary sewage and industrial wastes". An International Joint Commission on Boundary Waters Control, considering U. S. Canadian boundary waters, included storm waters in their recommendations that effluent waters be treated so as to achieve stated conditions in the open waters. When any sewage waters, even when treated, are discharged into a storm sewer system, by one line of reasoning the storm sewer becomes a sanitary sewer, essentially an extension of a sewage treatment plant outfall. Because of possible health problems associated with sanitary wastes, such discharges of treated or untreated sanitary sewage to surface waters or storm drains are usually prohibited by state or local health authorities, except where constant surveilance is provided by qualified personnel.

Although storm water run-off from urban, suburban, and exurban areas can be as high in BOD as sewage, these waters are not usually as rich in plant nutrients (phosphate and nitrogenous species). Eutrophication of receiving waters, especially impoundments, has become a serious problem, and tertiary treatment for nutrient removal is often required. Disposal of individual household effluents to surface waters and storm drainage systems could accelerate the eutrophication of receiving waters.

Non-degradeable polluting substances such as chlorides, metallic and other dissolved salts, and many toxic, corrosive, colored and taste-producing materials are dependent on dilution for maintenance below acceptable levels. In some streams, these substances and others such as pharmaceutical and agricultural chemicals, pesticides, and synthetic detergents are likely to increase in concentration downstream as the water is reused (33). Broader legislative controls are being recommended in trade literature and by advisory groups.

The demands for high quality surface waters will significantly affect the disposal of effluent from individual household treatment systems. In many states, effluents discharged to surface drainage are the responsibility of state agencies and individual systems may be forced to meet the same effluent standards as municipal treatment plants. The demand for assurance of high effluent quality and the possibility of future demands for removal of nutrients from the effluent could make the surface disposal of individual treatment system effluents impractical.

An inclusive set of water quality limits for public water supplies was recommended in the NTAC Report (95). It is not necessarily suggested that the effluents should meet these standards; however, it is pointed out that multiple stream water reuse causes almost any effluent now released to surface water to be eventually a constituent of a public water supply, and these standards may be eventually recommended for waste-water treatment goals.

Anything short of secondary treatment of effluent for discharge to surface waters will have to be considered marginal, open to probable criticism, and dependent on special local conditions, if indeed it will be permitted at all. Planning and engineering must consider the trend toward tighter control and policies of water resource enhancement.

Conclusions

A summary of the recommended water quality standards is presented in table VIII.

Several final remarks seem pertinent to this discussion. While the concentration levels of some contaminants may increase several times as standards are successively relaxed for various purposes, the allowable concentrations of some substances in each case are still relatively low and continued surveillance is required to see that the limits are not exceeded. The only reuse for which this is not extremely important is toilet flushing. Ultimately engineering considerations will determine if these varying levels of water quality can be practically supplied to the various supply points, or whether only two or possibly only one level of water quality is feasible for a household.

For effluent disposal the standards are being raised. The areas where discharges of less than secondary treatment quality are permitted are decreasing rapidly. In fact, under the influence of the increasing population the trend is toward demands that only water of drinking quality can be disposed to ground or surface water supplies. It is this trend that will eventually make water reuse economically imperative.

Table VIII. Summary of Recommended Water Quality Standards
(Limits in mg/l)

	USPHS Drinking Water Standards (mandatory limit)		Bathing Water	General Washing and Cleaning	Irr. Waters	Toilet Flushing Waters
Turbidity	5		10	10	10	20
Color	15		15	15	15	30
Odor	3		3	3	3	6
ABS	0.5		1.0	2.0	1.0	
Ag		(0.05)*	0.05	0.05	0.05	
As	0.01	(0.05)	0.01(.05)	0.05	0.05	
Ba		(1.0)	(1.0)	1.0	1.0	
Bo					1.0	
Cd		(0.01)	0.01	0.01	0.01	
Cl	250		500	500	500	
Cr^{+6}		(0.05)	0.05	1.5	0.05	
Cu	1		2.0	2.0	1.0	1.0
CCE	0.2		0.2	0.4	0.4	
CN	0.01	(0.2)	0.2	0.2	0.2	
F	(Appendix IA)		6.0	6.0	6.0	
Fe	0.3		1.0	1.0	1.0	1.0
Pb		(0.05)	0.05	0.05	0.05	
Mn	0.5		0.05	0.05	0.5	0.5
Fe + Mn			1	1	1	1.0
NO_3	45		90	180	180	
Phenols	0.001		0.005	0.01	0.05	
Se		(0.01)	0.01	0.01	0.01	
SO_4	250		500	500	500	

Table VIII. (Cont'd)

	USPHS Drinking Water Standards (mandatory limit)	Bathing Water	General Washing and Cleaning	Irr. Waters	Toilet Flushing Waters
TDS	500	500	500	1000	
Zn	5	10	10	10	
Ph		6.5-8.3	6.0-8.3	6.5-8.3	
Hardness		100	100		
Alkalinity		60	60		

*Numbers in parenthesis are considered the maximum allowable limits

III

THE WASTE DISPOSAL PROBLEM OF HOMES NOT CONNECTED TO CENTRAL SEWERAGE SYSTEMS

INTRODUCTION

This section discusses (1) the background of the septic tank problem (2) a review of previous studies on waste disposal for homes not connected to central sewerage systems, (3) a survey of the individual waste disposal systems presently available and (4) the magnitude of the individual waste disposal problem, including an estimation of the present number of homes served by individual waste treatment systems and a discussion of future trends.

BACKGROUND OF THE SEPTIC TANK PROBLEM

Homes that rely on individual household waste treatment units for waste disposal face different and more immediate problems than homes connected to a central sewerage system, since wastes are treated on the homeowner's own lot in his own system. Malfunctions of the waste disposal system become a problem in his own home, not somewhere across town at the sewage plant. It is the homeowner's own yard that has unpleasant odors, his own plumbing fixtures that won't function, and his own backyard that may be torn up. The many and varied household waste products are not diluted and combined with the wastes of hundreds or thousands of other homes, but go directly to the homeowner's own disposal unit and directly affect the treatment efficiency and the useful life of the treatment system. When the treatment device is malfunctioning or must be replaced, the homeowner must face the maintenance or replacement costs himself; it is not a shared community expense. In spite of these problems, it should be pointed out, that the individual waste disposal system is not always a source of trouble; in many cases it is the most practical and economical solution to the waste disposal problem.

The problem of waste disposal from homes not connected to sewerage systems has largely developed since the late 1930's. The clear differentiation between urban and rural society had begun to fade as new technology, new demands, and new jobs began to take effect. Until the development of rural electrification, most rural homes had lacked not only electrical appliances but also modern plumbing due to the absence of a pressurized water supply (100). Thus, the rural electrification program initiated the development of modern rural plumbing and greatly increased the demand for the septic tank soil absorption system which had first been patented by John Louis Mouras and Abbe Moigno in 1881 (102).

These septic tank systems consisted of a tank in which the raw sewage was allowed to anaerobically decompose before being applied to a subsurface soil bed and were usually constructed according to local "rules of thumb" or according to construction guides supplied by the state or federal health departments. In the relatively sparsely populated rural areas these systems apparently worked satisfactorily as health officials received very few complaints. However, the paucity of complaints probably resulted from the relative separation of the systems from populated areas and the tendency of the owners to personally repair or replace their own sewage systems without reporting the trouble to health officials (100).

Following World War II, the economic and social changes that had begun slowly were rapidly accelerated. The years of war had left many domestic supplies and appliances in short supply. This backlog of consumer demand helped to open jobs for the nearly ten million returning servicemen, who further spurred the consumer demand with their suddenly increased buying power. Most of these new jobs were in the cities, and the migration from farms to cities that had begun in the 1800's swelled rapidly, creating new housing demands in the central cities. Because of the higher wages and the availability of easy credit through the Federal Housing Administration, much of this housing demand was for individually financed homes. The percentage of owner occupied homes rose from about 44% in 1940 to more than 60% in 1960.

Since most of the building sites within the area served by city sewerage systems were either occupied or priced out of the speculative home building markets, most of this housing growth occurred on the outskirts of the large cities (24). Also, the enticing claims that the suburban developments combined all the best features of both city and country living were partly true. These suburbs were close enough for the convenience of working, shopping, and enjoying entertainment centers, and far enough to escape the smoke, dirt, and noise of the industries. This trend to locate in the suburbs surrounding the central cities was further accelerated by the superhighway systems which made commuting from the suburbs to the cities much easier. The superhighway construction itself destroyed city housing and created new demands in the suburbs (21). Industries and businesses followed this outward expansion and opened numerous branch offices and local facilities in the developing areas surrounding the central cities in an effort to escape the rising taxes and growing traffic problems.

Water supply for these developing fringe areas was achieved relatively simply through private wells or extensions of the municipal water system (100). Sewage disposal was not as easily supplied, however. Many of these suburbs were well beyond the economic limits of the central sewage disposal system. Providing city sewerage service from the central city would have required expensive sewer extensions with the additional problems of infiltration (7) and probably would have required the construction of pumping stations since many suburbs were located on marginal lands topographically unsuited for gravity drainage of sewage. Besides, in most cities the sewage treatment plants were not prepared to treat the increased volume of sewage from the subdivisions even if a collection system were provided (87). Some state laws also favored individual waste disposal systems. In Connecticut, for

example, the law forbids private institutions to operate sewage treatment plants as a public utility. Thus, systems that may have been more practical for both builder and buyer were never considered.

There was no immediate public concern, however, because the septic tank soil absorption system seemed to offer an adequate solution to the problem. It could be easily installed by the builder, expenses could be accurately charged to the home buyer, and it seemed to offer city-type waste disposal at a relatively low cost, and with little or no maintenance. The soil absorption system was counted on by the central cities to give adequate treatment to the septic tank effluent right on the home-owners lot. Health officials, though dubious of this wide-spread adoption of a relatively untested sewage disposal system, had no real basis on which to forbid septic tank use (100).

REVIEW OF PREVIOUS STUDIES

Unfortunately, the phenomenal increase in the use of septic tank systems after World War II did not occur as uneventfully as had been hoped. As large numbers of individual septic tank systems were put in operation near the cities and relatively close to neighboring homes, failures were readily noticeable. Due to inadequate or improperly constructed systems, many of the septic tank soil absorption systems failed. In some U.S. communities, up to a third of the septic tank systems in the subdivisions failed within three to four years after installation, thus creating an unexpected financial burden for the homeowners and bringing the problem to the attention of the Federal Housing Administration, the principal insurer of housing loans, and to the attention of the Public Health Service, the principal agency in charge of sanitary and health problems (53). These organizations initiated a series of extensive studies to explore the mechanisms of waste water disposal in the soil and the reasons for the eventual failure of the septic tank soil absorption systems. Later research was designed to investigate other waste treatment systems that might be better suited for the fringe areas of the large cities. The review of these studies has been divided into two major groups for the convenience of discussion. These major headings are: studies on septic tank and soil absorption systems and studies on other individual treatment systems and alternatives to individual systems.

Septic Tank Soil Absorption System Research

The common concept of a septic tank soil absorption system is a tank in which to collect and digest sewage solids and a soil absorption system from which the effluent percolates into the ground (see figure 3). The knowledge of the complex biological, chemical, and physical processes that occurred in this type sewage disposal was very limited and there was no good basis for the design of septic tank, soil absorption systems. The purpose of the initial studies was therefore to determine the controlling parameters of septic tank, soil absorption systems for sewage disposal.

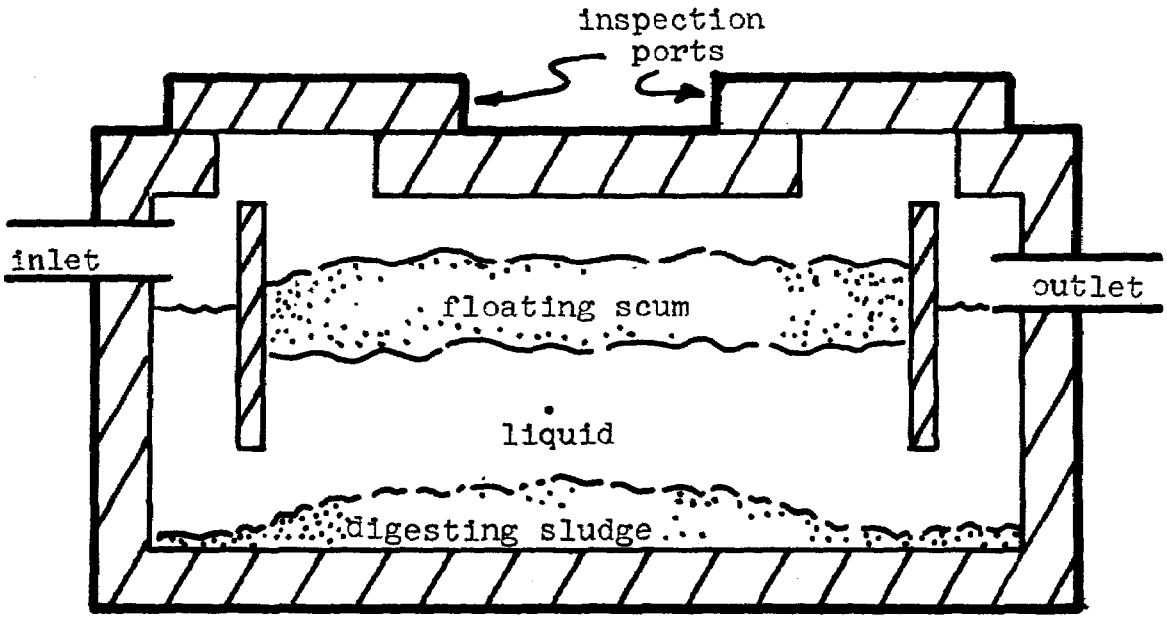

Figure 3. Typical Septic Tank Design

The treatment efficiency of the most commonly used septic tank designs was found not to vary significantly as long as the volumes were comparable. Volume was found to be the single most important factor of the design of the septic tank. The volume is very important in allowing adequate settling time, providing capacity for surge flows as from the bath and laundry, and in providing dilution for possible chemicals that could upset digestion. Compartmentation further improved performance by forcing greater utilization of the tank volume (9). More sophisticated designs could probably be used to improve settling efficiency, but the need for simple construction and ease of cleaning has kept designs simple.

Later studies investigated the addition of chemicals to the septic tank (through the water closet) in an attempt to achieve more complete solids removal in the septic tank (101). Organic and inorganic flocculants were found to achieve significant solids reductions, but the actual benefit of the addition is questionable. In these, tests run at the University of California, Sanitary Engineering Research Laboratory, no overall beneficial effects on the soil absorption system were observed (101).

A major problem connected with the septic tank is maintenance. Not all the material which settles out of the influent sewage is decomposed. Some of the organic material and most of the inorganic materials are essentially unaffected by the biological activity in the septic tank. Therefore, the amount of solid material in the septic tank slowly increases, and contrary to the popular belief in many areas, no chemical or biological additives have proven effective in lessening septic tank maintenance (9, 40). At some time, the accumulated solids will attain sufficient bulk to prevent the attainment of the relatively quiescent conditions which are required for the gravity separation of suspended solids. Thus, as the volume of accumulated sludge reaches a certain level, the efficiency of the solids removal decreases markedly and the amount of solids discharged to the soil absorption system increases. If this solids discharge is allowed to continue, the system will soon fail. To safeguard the system, the level of accumulated sludge and scum (floating solids) must be checked often enough to allow for the timely removal of the accumulated solids. Unfortunately, checking the level of the solids in the septic tank is not easily accomplished. The earth over the septic tank must be removed, the top opened, and some type of measuring device used to physically measure the sludge and scum levels (90). It is time consuming, odorous, and messy hard work which is understandably postponed even by homeowners who realize that the septic tank system does require maintenance. Until trouble erupts, the tendency is to assume that the system is working efficiently.

Probably the most important and expensive, but oddly enough, the most neglected part of the septic tank, soil absorption system is the soil system. It is in the soil that the remaining nutrients in the septic tank effluent must be oxidized and the remaining particles and microorganisms filtered out before the used water reaches the ground water reservoir. The soil absorption system is the final safeguard of ground water quality. It is also the quantity limiting factor of the system since water cannot be discharged through the septic tank faster than it can be absorbed into the soil absorption system. If the soil cannot absorb the septic tank effluent

as fast as it is applied, the excess sewage must either back up into the house waste system or erupt to the surface of the ground. Either case is a serious problem. Sewage stopped drains and sanitary fixtures are not only inconvenient and odorous but present a possible health hazard (75). If the sewage breaks through to the ground surface, there is danger of disease germs being spread with surface drainage, possibly into drinking water supplies, and collecting in puddles with the likely contact of children and animals. However, unlike the septic tank which is a physical item that must be specifically purchased, the soil absorption system appears to simply convey the liquid waste to the soil through a gravel filled hole. Thus, while builders have generally accepted the need for larger capacity septic tanks as water usage has increased, they have been reluctant to increase the size of the soil absorption field (20).

The studies sponsored by the Public Health Service and the Federal Housing Administration have attempted to clarify the mechanisms of treatment in the soil absorption system and the mechanisms by which the soil absorption system becomes clogged. The ultimate aim of the studies was to obtain sufficient information to allow recommendations for changes in the design, construction, and operation of soil absorption systems so that more efficient, safer, and longer lasting service would be promoted.

The magnitude of the task undertaken is awesome. The soil itself varies from gravel, through sand and silt, to clay in size, and from pure sand to humus in organic content, with all manner of variations and combinations between these extremes. The concentration, volume, chemical nature, and rate of sewage applied varies with the geographical location and from household to household. The weather is a very important factor because it influences ground water level, rate of evaporation, and to some extent the rates of water usage. To complicate matters, the amount of sewage applied to the soil is two to ten times as great as normal rainfall and accepted irrigation rates at which water normally seeps into the soil in nature (9). As might be expected under these circumstances, the first attempts to systematically design soil absorption systems were successful only in a limited area. In the 1920's Henry Ryon had established an empirical formula to correlate the percolation rate of pure water to the percolation rate of sewage for some troublesome areas of his jurisdiction. In an attempt to lend some rationality to the design of their own soil absorption systems, other public health officials used Ryon's formula or a slightly modified version of it for design in their own areas. The success of these attempts was understandably limited.

Other more general design systems were also suggested. These attempted to find the rate of percolation of water through the soil at equilibrium rather than at initial conditions (51). However, tests run at the University of California indicate that the long-term sewage infiltration rate is not significantly related to the initial infiltration rate for fresh water which is measured by any of the standard percolation tests (100).

Researchers soon realized the futility of attempting to analyze the disposal parameters prevalent in all the different sections of the country and instead attempted to first define and explain the fundamental mechanisms of disposal in the soil absorption system. Studies to determine how soil clogging began and how it progressed revealed many unexpected facts. Between the very porous coarse sands and gravels, which almost never clogged, and the almost impervious clay soils, which passed no water at all, the type of soil seemed to have no great effect on the clogging by septic tank effluents.

The studies revealed that the percolation of even pure (but not sterilized) water through this middle range of soils resulted in the reduction of the infiltration rate to a relatively low percentage of the initial rate. It also became clear that the infiltration rate, rather than the percolation rate, is the limiting factor. Obviously, the rate at which water can pass through the lower soil is insignificant if it can't get through the surface layers (101). The soil surface, or more accurately, the interface between the waste distribution system and the soil, is the key to clogging problems. Soil grains are consolidated at the surfaces by the passage of even pure water, and particles in the septic tank effluents are filtered out and collect at this interface further reducing infiltration rates. At times of high flow the reduced infiltration rates cause ponding of the effluent over the soil and promote the anaerobic conditions which lead to the accumulation of a ferrous sulfide precipitate. The colloidal ferrous sulfide particles can pass through the surface mat and the insoluble ferrous sulfide collects in the anaerobic conditions deeper in the soil. This gelatinous, black precipitate can soon form an impervious layer completely blocking further infiltration.

However, even this accumulation would not necessarily ruin the system. Further research showed that the ferrous sulfide soil blockage was reversible. Under aerobic conditions, the ferrous sulfide is oxidized to a soluble ferric salt and flushed through the soil, thus allowing infiltration to continue (100). The aerobic conditions also relieve the surface clogging as the organic solids are oxidized more rapidly. Aerobic unsaturated soil is also essential to the removal and oxidation of detergents and other resistant organic compounds (74). The problem is to obtain and maintain these aerobic conditions. The most effective technique for achieving these aerobic conditions was to merely rest the system and apply no more effluents. Unfortunately, the resting period required to restore infiltration effectiveness is much longer than now practical, often several months (68).

Other investigations showed that many misconceptions and errors had persisted in the installation and design of soil absorption systems. Studies showed that the distribution boxes, designed to give equal distribution of septic tank effluent to all parts of the soil absorption system, were not only unnecessary and theoretically unsound, but unworkable in practice. Serial distribution was found to be more efficient and also much less expensive (22). In addition, the researchers found that construction practices often partially destroyed the infiltration capacity of the soil absorption system

before it was even put into service. The use of modern excavating equipment has increased the possibility of smearing and sealing the soil surface so that extra care must be taken in construction, and in the scheduling of the construction, so that wet earth conditions conducive to smearing may be avoided (20, 8).

The summation of the experience and knowledge gained through these studies has been embodied in the 1967 revision of the Public Health Service Publication No. 526, "Manual of Septic Tank Practice". This manual is well written and serves as an excellent text and reference for health officials and septic tank installers. It provides essential information to guide the choice of the system and the design, construction, and maintenance of the system chosen. It only begins to fulfill the basic need for educating the users of septic tank systems, however. It is too long and too detailed to serve the needs of the average homeowner. More brochures such as Public Health Service Publication No. 73, "Septic Tank Care" (91), are needed and wider distribution, possibly through septic tank dealers or installers, Health departments, agricultural extension services, etc. is needed. The septic tank installers themselves have expressed a need for more information on the proper installation and care of septic tank, soil absorption systems (47).

Another item worth investigating would be the design of septic tanks with unobtrusive clean-out and inspection ports on the surface. This would eliminate most of the work in checking the level of floating and settled solids in the tank and promote better maintenance. Septic tank cleaners have reported that in over half the cases in which they are called, the owner has acted too late and the soil absorption field has already been clogged (9).

Other Individual Systems

Even with the best design, construction, and maintenance, septic tank, soil absorption systems cannot be universally employed. In many areas, the soil is not suitable for soil absorption type waste disposal. It has been estimated that less than half the land in the United States is suitable for disposal of waste water and much of the suitable soil is in the valleys desirable for farming rather than on the high ground which is desirable for housing (21). In other areas where the soil itself is suitable, soil absorption systems are undesirable because of high ground water levels such that adequate filtration cannot be achieved before the effluent enters the ground water reservoir. This is particularly important since the areas that use individual waste disposal systems also commonly have individual water supplies and ground water pollution is a major concern.

In some areas where septic tank systems are widely used, the disposal of the sludge which must be periodically removed from the tank is a major problem. The open dumping of these sludges is understandably prohibited near any population centers, and many municipal treatment plants are unwilling or unable to treat an additional organic load. Cases such as these emphatically point out the need for extensive, comprehensive planning before the decisions to permit new housing developments can be made.

Just as the streets and power lines in a new area must be carefully planned to provide the most efficient and most economical service, the method of sewage disposal must be carefully considered. In areas that are sparsely populated and not likely to grow appreciably, central water distribution and sewage collection systems may be more costly than the value of the service they could supply. In these areas the population can be served best by individual systems. In other areas the cost of individual systems may be greater than the cost of equal or superior service supplied on a community basis. Before the sewage disposal system can be specified, preliminary projections of future expansion and development of the community is very important, for the specification of either individual or community systems of waste disposal could mean a great difference in the cost of sewage disposal service. There are numerous cases where individual systems have been installed, only to require replacement with a community system at several times the cost if such a system had been originally installed, rather than after sidewalks, lawns, and streets have already been established. Also homeowners who have recently installed or repaired individual systems usually oppose any movement to establish community service (21). Similarly, the per household cost of operating and maintaining an improperly designed or unnecessary community waste disposal system can be prohibitive. Also, in areas with municipal water supplies where space is available and the soil suitable, individual systems may not only be more economical but help prevent stream pollution. Properly designed and maintained individual waste disposal systems in these areas would probably not burden surface water quality nearly as much as the effluent from a community waste system providing secondary treatment. The importance of planning for the overall requirements of a sewage disposal system in the total community cannot be over emphasized (18).

The choice of waste treatment systems now available is relatively limited. Basically, the choice is limited to aerobic and anaerobic biological systems. Septic tank, soil absorption systems are by far the most inexpensive and dependable individual system. However, they are not suitable in some areas of the country and other methods must be used. One modified version of the septic tank system, involving waste separation and a redesigned soil absorption system, is now being marketed (108).

Individual aerobic treatment systems have been proposed; but while they produce a higher quality effluent than septic tanks, aerobic treatment presents some of the same disposal problems and additionally requires maintenance and power not needed in the septic tank system. The purified liquid effluent from these aerobic treatment plants still contains organic matter, suspended solids, and possibly pathogenic bacteria. In most localities, the effluent from these systems must be discharged to soil absorption systems to provide safe disposal. Even if some means of disinfecting the effluent were provided, disposal to surface drainage would be unacceptable to many health officials, because malfunctions could occur without notice, and it would be very expensive for the regulatory agencies to provide the equipment and personnel needed for even minimum checking of effluent quality. Also many homes are not located adjacent to streams or water courses into which the treated

effluent could be discharged. Future developments and new, more reliable systems of control including service contracts for maintenance and performance checks, may make these devices more readily acceptable to health officials, but at present, if they are to enjoy wide usage, they must enable the effluent to be disposed to the soil more economically than from a septic tank.

The University of California Sanitary Engineering Research Laboratory, conducted a comparative study of a septic tank system and an aerobic treatment system (100). The effluents of the two units were very similar with regard to suspended solids and chemical oxygen demand. The septic tank gave a much more stable performance and was less subject to upsets. The aerobic unit, on the other hand, gave an effluent which clogged the soil less severely. Although these tests gave no clear advantage to either system, it is important to note that the effluent from the septic tank flowed up through a rock filter which, according to the report, was considered only to reduce the volume of the second chamber of the septic tank. This filter probably improved the septic tank effluent measurably.

Studies conducted at the Ohio State University (64) and the Massachusetts Health Research Institute (19) found that the effluent from aerobic units was superior to septic tank effluent in suspended solids and BOD. Thomas (87) suggested that with aerobic treatment units the soil absorption area could be reduced to 1/3 the area required with septic tanks. In some states the permitted rate for applying aerobic effluent to soil absorption systems is substantially higher than for septic effluent.

Much recent work has been done to provide sewage disposal systems compatible with growth areas where continued development is expected, and to develop other systems suitable for isolated population centers where no further development is anticipated. In areas where housing development is expected to continue, it is desirable to install the sewerage system as the homes are built, to avoid the double cost of temporary individual units and the higher installation costs which prevail after development has occurred. Such a system must have very low operating costs, must be expandable, and must fit into the overall plan for sewerage in the area. One solution would thus be an expandable mobile unit or series of units, in which initial collection lines would not be too long, and which could be moved and expanded as population grew. Oxidation or stabilization ponds have begun to receive wider usage in these situations. One plan of development is to build the stabilization pond in a convenient location to serve the first homes constructed. When the builder is ready to construct more homes he simply builds a new pond down stream. The old pond can be drained and reclaimed for building sites at a relatively low cost (23). In spite of the attractive low cost features of the stabilization pond, this method is not completely satisfactory because of the difficulty in controlling and removing algae growths and the detrimental effect on the effluent. Also, there are advocates of temporary schemes with higher unit costs which reduce popular resistance to establishment of a permanent system. Stabilization ponds have been used extensively in warm regions, but they have also been acceptable in the colder climates (50). Whatever the type of treatment chosen for the developing areas, the most important factor is to make sure the initial sewerage scheme is compatible with the overall long range plan.

The problem in isolated population centers is somewhat different. The need is for a permanent treatment system designed to give reliable, low cost treatment. Several types of treatment have been considered, including package aerobic treatment units, small anaerobic units, and oxidation ponds. Package aerobic treatment units are widely used in some areas. Some are merely scaled down versions of a conventional activated sludge plant, but useful variations of the activated sludge process such as extended aeration and contact stabilization have also been developed. There are many reputable manufacturers of package treatment plants, each offering some special treatment feature for aeration, solids separation, etc., and careful study is required to choose the type that best meets the requirements of a specific situation. A problem with many of these systems is the relatively uncontrolled discharge of aeration tank solids during periods of treatment upset. Stabilization ponds have also given excellent sewage treatment for permanent installations when they have been properly designed and are adequately maintained.

Anaerobic treatment systems have been used for sewage treatment for many years. The Imhoff tank was used for many years before activated sludge and trickling filters became popular. Recently, the Public Health Service has investigated the use of an anaerobic contact process in which the incoming sewage is filtered upward through a bed of anaerobic sludge (104). Private studies of anaerobic sludge treatment units are also being conducted (28). The choice of community treatment plants is again dependent on the circumstances. The number of people served, the money available, the quality of effluent required, and the maintenance force available will govern the final selection.

EQUIPMENT CURRENTLY MARKETED FOR TREATMENT OF WASTE FROM INDIVIDUAL HOMES

In this section, the devices currently marketed for individual home waste treatment are evaluated and compared as to first cost (equipment cost and installation expenses), operating cost, and effluent quality. The evaluation was conducted solely from information in the literature and from data supplied by the manufacturers; no actual testing was performed on any of the devices. For convenience in comparing the various systems, we assumed the treatment devices to be installed at "average" homes with three bedrooms, four "average" family members, and located on soil with poor, average, or good (classification according to Thomas (87))permeability. The discussion of anaerobic devices and aerobic devices is separate.

ANAEROBIC SYSTEMS NOW MARKETED

Conventional Septic Tank

The septic tank is the most commonly used individual waste disposal system. It consists simply of a container in which wastes are accumulated and digested under anaerobic conditions. Capacity and hydraulic design are the most important factors influencing septic tank performance. The capacity is important to allow quiescent conditions and sufficient time for sedimentation. The capacity must also be sufficient to dilute chemicals harmful to the digestion process and absorb surge flows from laundry and bathing without discharging digesting solids. Additional capacity is required for storage of the digesting solids. The hydraulic design determines storage efficiency and the extent of short circuiting and thus determines the percentage of the capacity that is effectively used. Figure 3 showed the principal septic tank features and figure 4 shows some of the common septic tank designs. The sewage itself contains the bacteria which catalyze the anaerobic decomposition of the solids which settle out. The septic tank system has no moving parts and the only maintenance required is the removal of solids which resist anaerobic decomposition and slowly accumulate in the tank. The solids must be removed before the effective liquid capacity of the tank becomes too small to allow solid particles to effectively settle out. Empirical formulas have been suggested for the volume of solids in the tank, but the rate of solids accumulation depends on too many factors (number of people, type of wastes, design, size of tank, etc.) for such formulations to be generally applicable. Thus, the time between required cleanings must be determined by periodic examinations of the solids accumulated. The average period between cleanings is usually two to four years.

The septic tank is usually constructed of precast concrete or steel, but brick, tile and other materials are also used. The steel tanks are the least expensive, but usually have a shorter life expectancy (seven to ten years). Many concrete, tile and brick tanks, on the other hand, are still operating after more than twenty years service.

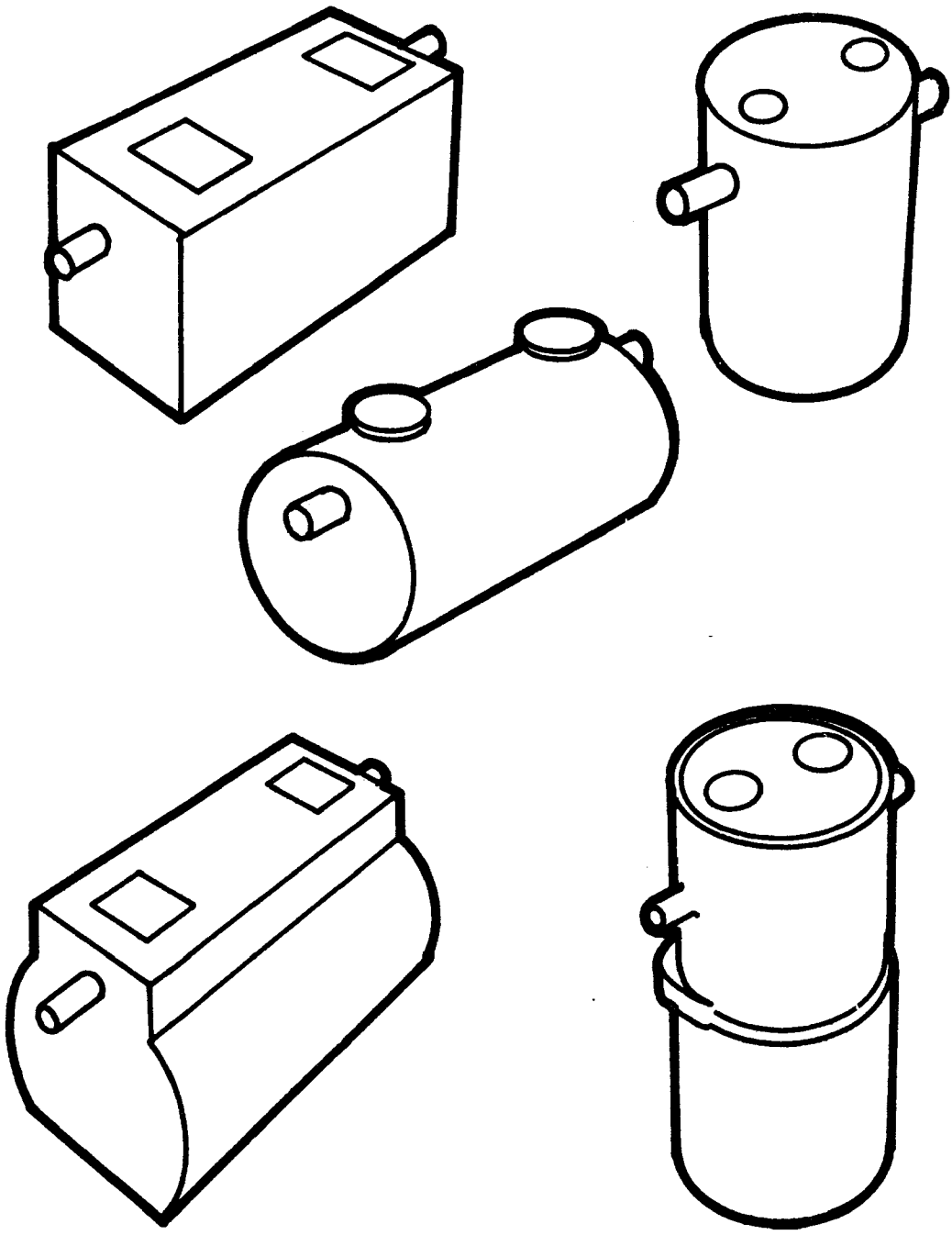

Figure 4. Common Septic Tank Shape (from Manual of Septic Tank Practice)

Treatment Costs - An adequately sized concrete tank can be obtained for less than $120; installation of the tank may cost over $250. The effluent from the septic tank must be discharged to a subsurface soil absorption field for final treatment because the septic tank effluent is still not fit for surface disposal. The cost of the soil absorption system cannot be accurately estimated unless the absorption system design, soil conditions, type of home and labor costs, are known. For purposes of this discussion we will assume, as mentioned in the introduction, a three-bedroom home with a four member family and we will theoretically design for a 20-year soil absorption system life (23) and will use some average cost figures. In a soil with poor permeability, approximately 1600 square feet of soil interface costing approximately $1600 to $2400 would be required. For a fair soil, only 500 square feet at $500 to $750 would be needed. In good soils, 170 square feet at $200 to $300 may be sufficient. Then, with a $14 per year maintenance charge (cleaning every 2 to 4 years), the yearly cost for waste disposal would be $112 to $152 in poor soils, $57 to $70 in fair soils, and $42 to $47 in good soils. (Basic data from references 87 and 90). These costs can also be approximately reported as a cost of $1.42 per 1000 gal. in poor soils, $0.68 per 1000 gal. in fair soils, and $0.47 per 1000 gal. in good soils.

Effluent Quality - The following table lists a few treatment parameters for the experimental septic tank used in studies at the Sanitary Engineering Center at the University of California. Effluent values are compared to the influent sewage values in terms of mg/1. (Recall that this system had a rock filter which probably increased removal percentages). Aesthetically, the anaerobic effluent may be more offensive than the raw sewage that enters the tank, because the products of anaerobic oxidation are commonly odorous compounds. Also, the bacterial content is often higher than that of the influent sewage.

Parameter	Raw Sewage	Septic Tank Effluent	% Removal
BOD	150	75	50
COD	310	160	48.4
Suspended Solids	185	50	73
Volatile solids	265	160	39.6

The coliform count of the effluent may be higher than 10^6 per milliliter, a number which is 10,000 times the permissible level of 10^2 organisms per milliliter in the recommended standards for surface water used for bathing (95).

A Variation of the Anaerobic System

A fiberglass septic tank system now being marketed boasts two significant changes purported to make it advantageous over the common system. The proper operation of the system requires that wash waters be separated from sanitary and kitchen

wastes. The sanitary and kitchen wastes can thus be held in the upper compartment for a longer period of anaerobic digestion. Under this arrangement, the sanitary wastes receive more concentrated treatment and the bactericidal effects of some detergents and household cleaning agents are avoided. The waste wash waters are conducted to a lower chamber where they are mixed with the effluent from the upper compartment and undergo a somewhat shorter period of treatment.

This system is sold as a package unit including the soil absorption system which is designed to be independent of the natural soil characteristics. It is claimed that sufficient sand and gravel fill is placed around the tank to allow all the effluent to evaporate to the atmosphere if necessary. Tests reported by the Sanitary Engineering Research Company (108) indicated that the system can work even in impervious soil. This system, like normal septic tanks, has no moving parts, and the only maintenance required is periodic solids removal. Another feature available with this unit is a 20-inch inspection and cleaning port which is extendable to the ground surface and gives access to both compartments.

Treatment Costs - The unit itself costs $445.41 plus shipping costs which will vary with location. The cost of the piping, installation labor, and the material for the soil dispersion system would raise the total system cost to approximately $1100. These systems have been in operation for only a few years and no actual data is available for estimating maintenance and life expectancy. However, based on the manufacturer's claims, a soil system and tank life of 20 years with cleaning required every four years is believed to be reasonable. Thus, an approximate yearly cost of the system is $65.00. These systems reportedly require the same seepage area no matter what the soil conditions, so there is no recommended differentiation for soil conditions. It seems certain, however, that the life of the rock filter system would increase in good soil locations.

Effluent Quality - This system is designed to produce no effluent to surface waters, and it is claimed to be operable with no liquid discharge from the rock filter at all. The testing data in the reports from the Sanitary Engineering Research Company list only the suspended solids; reported removal of the suspended solids varied roughly from 50% to 90%, a range not significantly different from the values reported for the experimental septic tank used by the Sanitary Engineering Research Center of the University of California, but probably considerably better than the normal septic tank.

Conclusions - The major advantages of the anaerobic systems are their simplicity and the resultant low maintenance costs. Of the anaerobic systems considered, the data indicate that the conventional system is more economical in good to fair soils, while the new system becomes competitive in fair soils and definitely more economical in poor soils. Thus the choice depends on the soil conditions. Either method should be reliable for use. The reliability of the conventional septic tank, soil absorption system, when well designed and properly maintained, is reflected by its wide acceptance and use. Such a record is not available for the new system, but the fact that it has recently been approved by the Federal Housing Administration testifies to its performance.

SURVEY OF AEROBIC SYSTEMS

Several types of treatment plants using aerobic, rather than anaerobic, stabilizing processes to reduce solids and improve effluent quality are now being marketed for individual home use. The aerobic oxidation system consists essentially of a compartmented tank containing an aeration section and a settling section. Most units are designed for continuous flow, but a few operate on a batch basis to avoid flow surges in the aeration compartment. In the aeration compartment, the raw sewage is mixed with the oxygen in the air for relatively long periods of time. Under the aerobic conditions, the bacteria in the sewage utilize the organic materials for growth and produce a flocculent bacterial sludge which rapidly absorbs nutrients from influent sewage. In the settling chamber the bacterial matter is settled leaving a clarified effluent from which both dissolved and particulate organics have been removed. Figure 5 shows a typical aerobic treatment unit. Many of the marketed units include extra treatment processes before and after the basic aeration and settling sections.

Aerobic treatment systems do not remove unoxidizable and inert waste constituents, unless provision is made to periodically remove solids from the aeration section or subsequent treatment step. However, unoxidized and inert solids are not necessarily discharged from the settling section on an even basis. There is a tendency for solids to build up to an unstable level, followed by periodic discharge from the system.

The effluent of the aerobic system is generally better than that from an anaerobic system. Most units claim treatment comparable to municipal secondary treatment (approximately 90% BOD reduction and 80% reduction of suspended solids). A major advantage of the aerobic effluent compared to the septic tank effluent is its lesser clogging effect in soil absorption systems (87). Disadvantages of the system are higher operating costs, greater susceptibility to shock loadings of concentrated wastes and to harmful chemicals, and the variations in effluent quality due to such treatment upsets (100).

In the survey of individual treatment units as many manufacturers as possible were contacted (the manufacturers supplying information on individual home treatment units are listed in the appendix (table 1A)). According to one manufacturer, the individual home treatment market has been in a constant state of flux. He reported that there had been twenty-five entries into the home waste treatment field since 1955 and that of these only fourteen were still in business. Eight of these fourteen had entered the market in the last three years. These figures indicate that there is a great interest in and a need for an individual treatment system to serve certain areas, but also that many of the treatment systems marketed have been unacceptable and probably have created a poor public opinion of the industry.

Most manufacturers were reluctant to release sales figures, but from the data obtained we estimated that approximately 20 to 30 thousand of the aerobic units have been installed, primarily by a few of the more reliable manufacturers. The correspondence and catalogues received from the various manufacturers have been

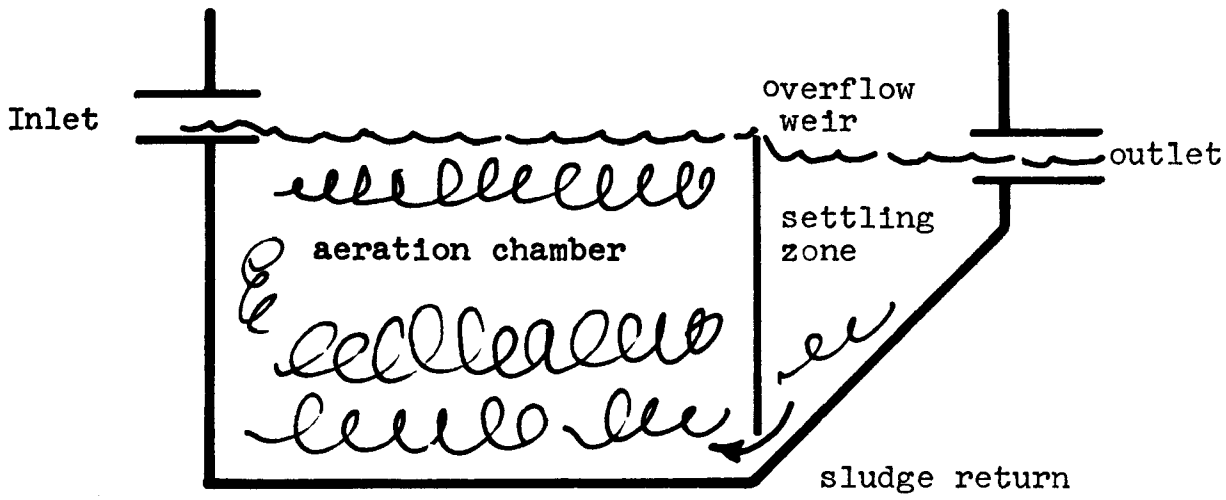

Figure 5. Basic Design of Aerobic Treatment Units

studied in detail, and the salient design, construction, and treatment features are discussed below.

Pretreatment

Pretreatment of the sewage is not essential for aerobic treatment, but several of the manufacturers do provide a pretreatment before aeration. One manufacturer uses a grinder to reduce the waste material to small particles which are more rapidly oxidized in the aeration chamber. Another manufacturer uses an anaerobic chamber in which solids are settled and organics are partially digested before the aeration chamber is reached.

Aeration Chamber

All the units attempt to mix air with the sewage, but the means of mixing vary considerably. The greatest number of units installed utilizes mechanical mixers which physically mix the air with the wastes and at the same time provide continuous mixing of the liquid. Many of the remaining units blow a fine stream of compressed air bubbles into the sewage to provide oxygen, and one system uses a vacuum aspirator system to draw air into the waste fluid which is mixed by the same pump that creates the vacuum. A Swedish unit (not yet marketed) utilizes a helix in a half cylinder trough for aeration and agitation. The rough surfaces of the helix pick up a thin film of waste which is exposed to the air and oxygenated during half of each evolution. The bacterial scum produced on the surfaces is similar to activated sludge solids.

Solids Separation

There are also many variations in the method of separating the bacterial solids from the effluent. The most common system is a continuous flow-through tank in which there is no agitation and the solids settle to the bottom while the clarified liquid flows out. There is usually a baffle to prevent floating solids from entering the effluent. The settled solids are usually returned to the aeration chamber by gravity or by a pump. One system which has been developed and patented but is not currently marketed provides for completely quiescent settling. Another patented system (not currently used in individual units though apparently adaptable) uses a slanted tube system in the settling chamber (27) to provide better settling. Two manufacturers enclose the aeration section in a bag filter which allows only solids smaller than the filter mesh to escape from the aeration system. Another unit has a submerged, fixed biological filter which effluent flows up through following the settling chamber.

Final Treatments

Many of the treatment units come equipped with or have available a variety of post treatment systems designed to make the effluent more amenable to disposal. The most common post treatments are disinfection of the effluent and removal of suspended solids by filtration. Chlorine, ozone, and other chemicals as well as pasteurization have been suggested for disinfecting the final effluent. One unit relies heavily on

super chlorination to make its effluent acceptable for disposal. In another system, the effluent is filtered through a particulate and carbon adsorption filter and then re-used as a toilet flushing liquid.

Economics of Aerobic Treatment Systems

Obviously, the many different aerobic treatment designs vary as to purchase price installation and operation. However, the systems have sufficient characteristics in common to allow an approximate table of purchasing and operating costs to be established. All the systems are designed to provide aerobic oxidation of household wastes, a process that is time-dependent. Therefore, each system must provide an aeration chamber in which the sewage is detained long enough for the oxidation to occur. In most cases, this requirement is simply met by a tank large enough to provide the required detention. The National Academy of Sciences Report on "Individual Household Aerobic Sewage Treatment Systems" (60) recommended a volume in the aeration compartment of 67 gal. per person (no garbage grinder) or 100 gal. per person with a garbage grinder. Since most systems are planned for at least a six-member family, the volume of the aeration chamber is usually 4 to 6 hundred gallons.

Oxygen requirements can also be treated in general terms. For design purposes, the raw sewage is generally considered to have some average oxygen consuming value which requires a certain amount of oxygen. Although the efficiencies of supplying this oxygen necessarily differ, the variance is probably small in a well-maintained system. Therefore, it is assumed that, in general, the installation and operating costs as derived from several of the reliable systems are approximately comparable for the basic aeration, solids-separation system. The approximate costs of aerobic systems are listed below. Values are also included for some of the common means of final treatment.

TREATMENT COSTS

Purchase and Installation Cost	$800 to $1600
Operating Costs (per year)	
Electricity	$ 25 to $ 100
Service and Maintenance	$ 30 to $ 50
Filtration	
Initial Cost	$150 to $ 200
Yearly Operating Cost	$ 10
Disinfection	
Initial Cost	$150 to $ 600
Yearly Operating Cost	$ 20 to $ 50.

Using the lower estimated costs without including post treatment costs, the basic cost of treatment is $95 per year or abour $1.02 per 1000 gal.; inclusion of filtration and disinfection would increase this rate to $1.34 per 1000 gal. Thus except in poor soil areas aerobic treatment is more costly than anaerobic waste treatment without even considering disposal of the aerobic effluent.

Discussion of the Aerobic Treatment Systems

A comprehensive review of aerobic treatment systems, including a general review of treatment unit objectives, general construction and operating criteria, and a discussion of the conditions wherein aerobic systems should be used, is presented in the National Academy of Sciences report "Individual Household Aerobic Sewage Treatment Systems" (60).

High costs are a major problem with the aerobic treatment systems and discharging the effluent to surface drainage rather than to a subsurface soil absorption system has been suggested as a means of cost reduction. Some of the treatment units do consistently produce an effluent suitable for surface drainage. However, other units obviously have not met acceptable standards and in many areas surface disposal of aerobic effluent is not legally permitted. The reluctance of public officials to permit surface disposal is easily understood. Even for treatment units consistently producing a good effluent it takes only one malfunction to release contaminated water which could endanger the health of the community. Health officials do not have specific criteria at this time to evaluate the many different types of treatment units, their expected performance, or the maintenance problems that might be encountered; and rather than permit the development of a possible health hazard, a common reaction has been to prohibit all surface discharges from individual treatment units. Also, health officials realize that they could not adequately police the number of surface discharges that could occur. The quality of effluents discharged to storm drains, the most convenient disposal method, would be even more difficult to monitor.

Sludge disposal is also a problem with aerobic systems. When the extended aeration system was first proposed it was believed by many that all organic material would be eventually oxidized to gaseous products and water. However, just as in the septic tank some organic materials resist digestion, as do nearly all the inorganic solids, so that there is a gradual build up of solids which must be removed to prevent the periodic discharge of slugs of sludge particles in the effluent. As with anaerobic systems the rate of accumulation depends on the system design and operation. Thus regular inspection is a necessity.

The further growth of the market for individual home aerobic systems thus seems dependent on the inclusion of adequate safeguards against unattended malfunctions through better instrumentation, better service contracts, and greater cooperation among the homeowners, the equipment manufacturers, and the public officials. The information supplied by the manufacturers indicates that they are attempting to achieve this goal. No completely satisfactory system has yet been proposed, but

many advancements have been made and surface discharge is gaining acceptance in more areas as system improvements and safeguards are supplied.

Each treatment system has features which make it more suitable for certain applications and each situation will demand a careful examination of specific requirements before a particular treatment unit can be chosen.

DISCUSSION OF THE FUTURE DEMAND FOR INDIVIDUAL WASTE DISPOSAL SYSTEMS

PRESENT STATUS OF INDIVIDUAL HOME SYSTEMS

The wide-spread growth in the use of the septic tank soil absorption system continued until today more than twenty-five percent of the 60 million individual housing units in the country depend on septic tank, soil absorption type sewage disposal. Of the approximately two hundred million people living in the United States, roughly one hundred twenty-six million are connected to central sewerage systems, while about seventy-four million use individual disposal systems (92). Using the national average of three persons per household, (89) these seventy-four million persons can be roughly equated to approximately twenty to twenty-five million individual disposal systems.

The first nationwide data on the numbers and types of household water and waste disposal systems was collected by the Housing Census of 1960 for communities of twenty-five thousand or less. These data showed a total of nearly fourteen million septic tank or cesspool systems. Including the approximately 1.4 million new homes equipped with septic tanks that have been constructed since 1960 (reports from the Federal Housing Administration), and allowing for a small percentage of septic tank installations that are still operating in cities of more than twenty-five thousand people, the number of septic tank or cesspool installations now in use can be roughly fixed between fifteen and seventeen million.

A relatively small number of individual aerobic type treatment devices are now in operation. The total number of these installations is considerably less than fifty thousand. The five to ten million remaining households use primitive waste disposal methods or discharge the untreated wastes directly into adjacent water courses. The number of households reportedly having no plumbing at all, and specifically no flush toilets, roughly coincides with this number of five to ten million remaining households. This indicates that most of these homes use a primitive waste disposal method such as the pit privy.

Future Projections for Individual Home Systems

The population of the United States has increased at a uniformly high rate since the sudden growth surge following World War II and the demand for housing has increased correspondingly. However, the actual demand for new homes is primarily a function of new family formation (21) and the preference of the new family for an apartment or an individual home. The children born in the high birth rate period of the late forties are now coming to marriageable age and the rate of new family formation is

rising. At the same time, the percentage of multifamily dwellings is increasing. Of course, many of the newly formed families have chosen apartment dwelling from financial necessity, but the number of families who actually prefer apartment living seems to be increasing. This is partly a result of the growing mobility of our society. Many families move frequently as jobs change or better opportunities become available in other cities and other states. The task of repeatedly buying, selling, and maintaining property becomes very burdensome. Apartments also provide other advantages, such as recreational facilities which are not available to most homes. Also, modern apartments are providing the privacy and work space severely lacking in older apartments. This trend toward permanent apartment living is reflected in the increasing construction of apartments with two or more bedrooms as more families continue to choose apartment living as their families grow larger. The percentage of apartments constructed with two or more bedrooms rose from 47% in 1964 to 58% in 1967 (Economic News Notes, Sept. 1968).

If these trends continue, the demand for individual housing will probably not increase as rapidly as the population. However, recent trends indicate that most of the individual homes that are constructed will probably be built beyond the reach of existing central sewerage systems. Nearly all the recent population gains have taken place in metropolitan areas as rural population has actually decreased. However, most of the metropolitan growth has been on the fringes of the cities. From 1950 to 1960,76% of the metropolitan growth was outside the central cities. From 1960 to 1966 this figure increased to 87% (88).

However, the percentage of those new individual homes that will use individual treatment systems will be difficult to estimate. The knowledge gained in the many studies on septic tanks and soil absorption systems and the development of alternative methods of community waste treatment have helped to decrease the rate at which new septic tank soil absorption systems are being installed. Records of the Federal Housing Administration show that the percentage of new homes built with septic tank, soil absorption systems has steadily decreased. In 1960, the percentage of new individual homes with septic tank, soil absorption type systems was approximately 18 percent. By 1967 the percentage had dropped to approximately 10 percent. Housing developers and public health officials now recognize that septic tank soil absorption systems are not suitable for all areas. Also developers are recognizing the economic advantages of comprehensive planning. It is important to emphasize, however, that the actual number of septic tank soil absorption systems and other individual systems being installed is still very large, and will continue to be for some time in the future. The need for more research on treatment systems for isolated households and the distribution of the information on individual systems to the homeowners will increase rather than decrease in the future.

Individual aerobic systems will probably gain a larger share of the home waste treatment market in the near future as their overall economic superiority over septic tank systems for certain soil conditions (87) becomes more widely known. Any

large gains, however, will depend on the development of reliable automatic controls, fool-proof systems for effluent disinfection, the development of low cost service contracts, and above all, the confidence of health authorities.

Although the rate of increase of individual systems should decline, the number is already very high and as water quality requirements become more exacting the problems of individual treatment will be much greater. Thus, future research cannot be concentrated only on the types of sewage treatment now commonly used. Other scientific disciplines should be surveyed for possible processes and technology to help meet the requirements of the future (59). Some of the advanced waste treatment techniques that are now being tested are reviewed in a later section (section V).

IV

HOUSEHOLD PLUMBING FIXTURES TO REDUCE WATER USAGE REQUIREMENTS

INTRODUCTION

This section presents a study and engineering evaluation of possible changes in household plumbing fixtures to reduce water usage requirements, and hence reduce the flow of waste water from households (Task I). Specifically, the following program was undertaken: (a) a review of previous studies, (b) a survey of plumbing fixtures that have the potential of saving water, and (c) evaluation of the feasibility of using these fixtures in the household on the basis of quantity of water saved and cost (fixture cost plus installation labor).

REVIEW OF PREVIOUS STUDIES

The Cornell University study "Bathroom - Criteria for Design" was reviewed (45). While this report was very interesting, it was slanted more toward physiological, psychological, and aesthetic improvements in design (i.e., human engineering) rather than towards a reduction in water usage. For example, the report encourages the use of the urinal for reasons of convenience and aesthetics, but does not mention its potential for water savings. Many of the design concepts presented would use more water rather than less.

Very little information was found in the open literature on water savings to be realized by the installation of special valves or fittings. In most cases, these fixtures are designed primarily to conserve hot water and reduce fuel costs. Reduced hot water use is particularly helpful where the hot water supply is heated instantaneously from a house heater.

The British have been very interested in economizing on the use of hot water in lavatory basins since fuel costs are high in the United Kingdom. In one series of tests run in large office buildings, wash basins were fitted with thermostatically-controlled, single outlet spray taps (26, 78). Test results showed one-half to two-thirds reduction in water consumption for washing as compared to standard basins fitted with 2 faucets and a drain plug.

The British have developed a dual cycle water closet, one flush cycle for urine, the other for solid wastes (26, 70). The water closets operate on a syphon system with a very shallow trap seal. The flush for solid waste is 2.5 gal. (2 Imperial gal.) as compared with 5 to 6 gal. in the standard American fixture. The urine cycle uses only 1-1/4 gal. These cycles are actuated by a short sharp stroke or pull for the smaller amount of water, or a longer sustained pull for solid's flushing (see fig. 6).

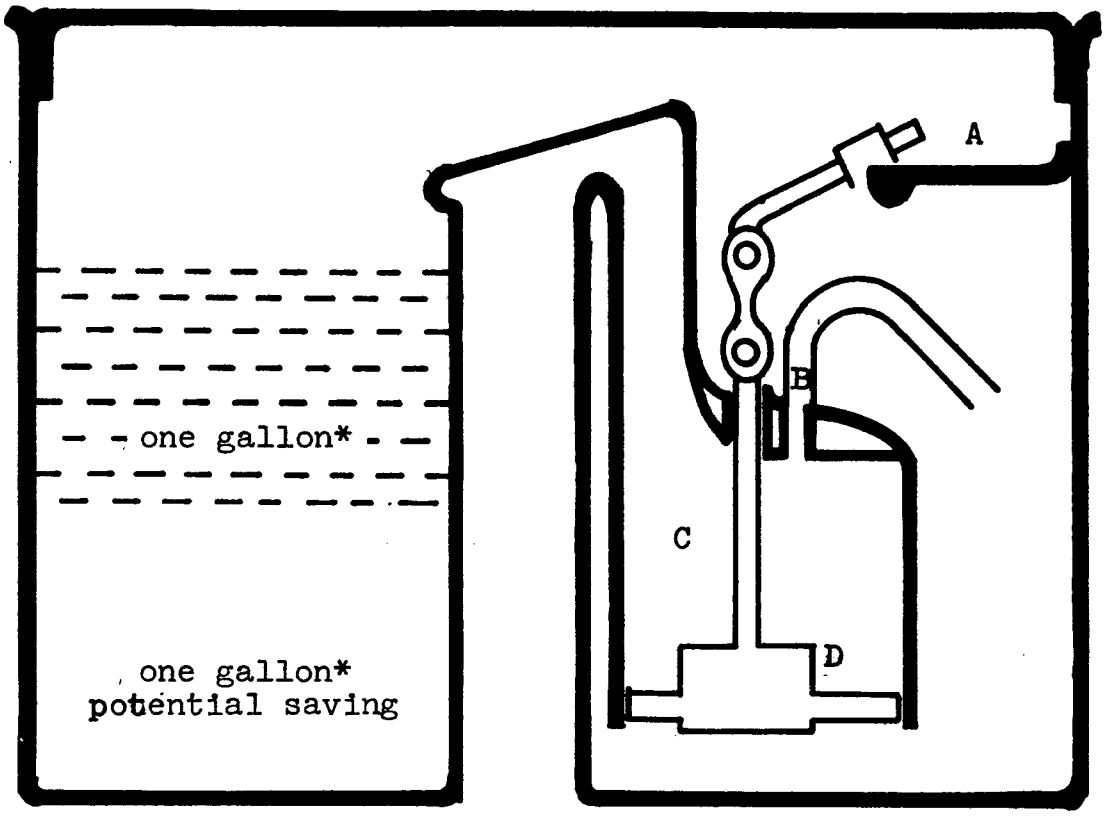

A-handle, B-air intake, C-siphon, D-piston

When the piston (D) is held open, the air intake (B) is closed and the whole contents of the tank are siphoned.

When the piston is opened, then released, the air intake is open and the siphon breaks when half the tank is empty.

* Imperial gal.

Figure 6. Dual Flush Toilet Tank

The test results using this dual flush cycle in low income flats showed a mean saving of 27% of the normal water used. (It should be noted that "normal" for water closets in England is only 2 Imperial gal. per flush).

These studies have been going on in the United Kingdom since 1956, and the reports noted above are quite detailed. However, as noted, the tests have been directed towards large office buildings or multiple family apartments rather than individual homes.

The reason for this greater concern for water economy in Europe is the higher water costs and the greater public awareness of these costs. Most services in the United Kingdom are metered. In the United States, however, public water supplies in big cities (especially in the older sections) are not metered, and water is wasted because so much of it seems available at no direct cost to the user.

SURVEY OF PLUMBING FIXTURE MANUFACTURERS

A survey of manufacturers of plumbing fixtures and household appliances was made to determine the availability (commercial or under development) of hardware devices that have the potential of reducing water consumption. The companies responding are listed in Appendix IIA. The information furnished leads us to believe that the manufacturers of plumbing fixtures and equipment are cognizant of the problems requiring reduction of water consumption and waste water flow reduction in households. The results of this survey are summarized below.

Faucet Flow Reduction Devices

Several manufacturers currently market limiting flow valves and mixing valves that restrict the maximum flow rate (29, 67, 46). These valves provide maximum water savings with showers although they can also be used in kitchen sinks and bathroom lavatories. One company offers an inexpensive flow reduction device which is pressure compensating, fits in the supply lines to faucets or showers and reduces the flow from conventional fittings.

For shower heads, the flow rate with a limiting flow valve is usually restricted to about 3 gpm. A water savings (for showers) of 50 to 70% is claimed, but independent test data are not available. Obviously, the quantity of water saved will be dependent on many factors, including the water pressure available and the habits of the user.

For lavatory and kitchen sink fittings, the flow is usually restricted to 2.5 gpm for each valve. Water savings are claimed to be "up to 50%", but again test data for households is not available.

An important advantage of the flow reduction devices for showers and sinks is the savings in fuel for hot water heating. A reduction in total hot water consumption of 25 to 40% is claimed; this can provide a reduction in fuel cost that is the same order of magnitude as the total savings in water cost.

A very simple water-saving device already in wide use is the aerator used on faucets. Although intended principally as an anti-splash device, it does provide some water savings. It is estimated that the faucet aerator reduces water consumption at kitchen and lavatory sinks by approximately 25%.

Another plumbing device which promotes some water savings is the thermostatic mixing valve, a device which permits mixing of hot and cold water to attain a desired temperature level. Once adjusted, the proportion of hot and cold water is varied automatically by a bi-metallic coil as the temperature or pressure of the incoming water is varied. Thus, the bather is not in danger of being suddenly scalded or doused with cold water as others in the household stop using or begin using water at other fixtures. This diminishes the danger of falls as bathers try to avoid the sudden changes in water temperature while standing on slippery tub or shower floors. Besides advantages in safety and convenience, the thermostatic mixing valve offers the opportunity for moderate savings in water consumption. This device enables the bather to turn the shower off while soaping and to be able to have the same temperature when the water is turned on for rinsing. This saves the water that would be wasted as the water temperature is readjusted before rinsing or the water that would be wasted if the shower were left on in order to avoid the problem of adjusting the temperature again.

Water Closets

A standard U. S. water closet with a 4 gal. tank will, in most cases, deliver about 5 to 6 gal. of water from the time the handle is tripped to the time the tank refills. This is considerably more water than is really necessary. U. S. manufacturers now market shallow-trap toilets that use about one-third less water, i.e., about 3.5 gal./flush (99). One such unit is shown in figure 7.

As noted earlier, the British have pioneered in the use of dual flushing cisterns (2-1/2 gal. or 1-1/4 gal./flush). This is now a mandatory requirement in certain parts of the United Kingdom and has been included in the revision to British Standard 1125 (41). This same reference states:

> "With regard to U. K. type closets, you will note that these are designed to clear the pans with one 2-gallon flush. There would be no difficulty in designing a syphon closet, suitable for the American bottom outlet requirements, which will also work efficiently with a 2-gallon (Imperial) flush. We would also mention that in England cisterns are operated by syphons which prevent the water running away to waste into the W.C. pan."

Figure 7. Shallow Trap Water Closet

This dual cycle water closet would provide a 70 to 75% reduction in water usage (as compared to the common U. S. toilet). However, it should be noted that this design may not meet the requirements of the plumbing codes in some U. S. localities.

Batch-type flush valves (instead of a tank) are widely used in commercial buildings and apartments, and these could also be used in homes. They can be set to deliver from 0.5 gal. to 4 gal./cycle (66). However, they would require a larger diameter water line than is now used to supply a flush tank.

One of the most interesting developments in water closets is the Liljendahl* system (Swedish) which is being investigated for use in this country by the Eljer Plumbing Company (103). This system uses air (rather than water) as the transport fluid and requires only 0.5 gal. water/flush. Plastic pipe (2" dia.) is used for the drain lines, and a waste receiving tank and vacuum pump are needed. The system is in use in hotels, motels, apartment houses, and other large buildings in Sweden and in the Caribbean Islands; it has not , as yet, been used in individual homes. (See figure 8).

Urinals

Wall type urinals of compact design for home installations are available (99). These urinals have batching-type flush valves set at 1.5 gal. water per use.

The use of urinals in the home would have two obvious disadvantages:

1. additional bathroom space would be required, and
2. the units would serve male household members only.

Female urinals are used on a limited basis in a few office buildings and factories, but their use in homes is not warranted.

Automatic Clothes Washers

Water requirements for washing machines vary considerably, depending on design, from about 20 to 33 gal./cycle.

One of the features used with automatic washing machines to save water (and detergent) has been to store and reuse the wash water. However, this feature has not proved popular with the consumer as indicated by the following quote (72):

> "The automatic washer is but one element in the home laundry process. Fabrics, detergents and laundry aids have far more effect on water than the machine does. For some time we have marketed what we call "Suds Miser" models of our washers. These utilize water twice and at one time represented a significant share of sales. In recent years homemakers have more or less rejected the suds saver feature . . . Changes in fabrics and detergent technology have meant the need for more water. Permanent press items, for instance, require more water for washing because they must go through a gradual cool down. There is nothing that we, as manufacturers of equipment, can do to lessen the need for water in the washing process because of developments in fabrics and laundry aids."

*Mention of a commercial product does not imply endorsement by the Federal Water Pollution Control Administration.

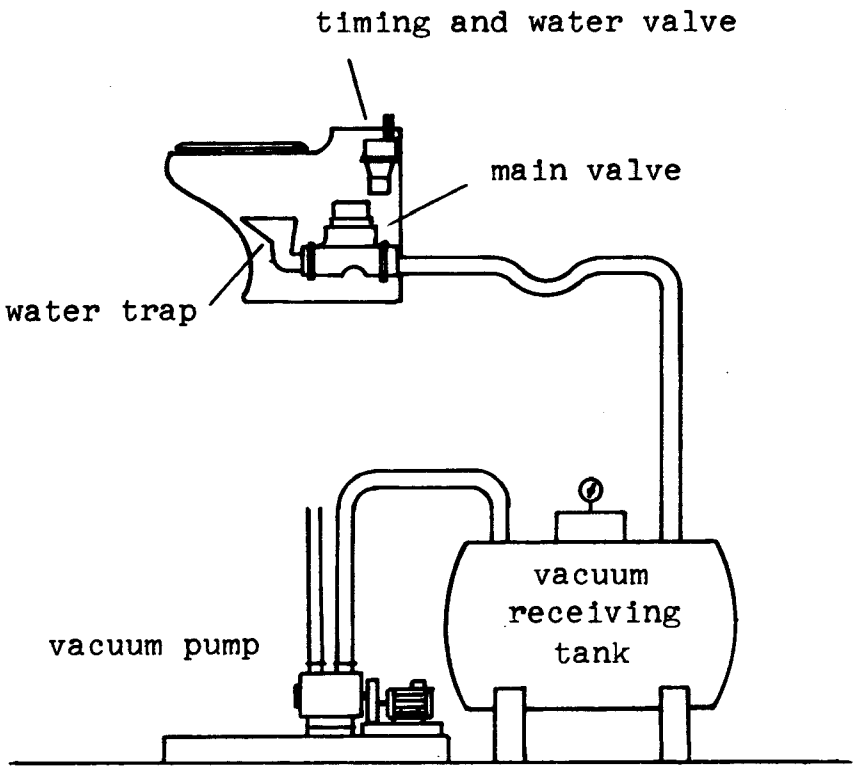

(may be located above or below toilet)

Figure 8. Vacuum Toilet System

Another feature now being marketed is a loading door which acts as a weighing scale to measure the amount of clothes to be washed. Knowing the weight of the clothes, the user then selects only the amount of water required to wash a particular load size. In other words, a water level control is provided which can be set to avoid using unnecessary extra amounts of water (34).

Another means of reducing the amount of water is by the use of front loader washers. The washer tub rotates on a horizontal axis and tumbles the clothes through the water. This type of washer uses approximately half as much water for a particular load size as compared to the top loading washers and costs about the same. Early homewashers (patterned after commercial laundry washers) were of this type, but consumer acceptance was poor.

Automatic Dishwashers

In recent years the number of homes with automatic dishwashers has been increasing fairly rapidly. Depending on the design, water requirements vary considerably, i.e., from about 6 gal. to 19 gal./cycle (30). Based on studies that indicated an average of 1-1/3 uses/day, the average household uses 13 to 19 gal./day in their automatic dishwasher (96). These values do not include water used in rinsing the dishes before putting them in the dishwasher or the water used in washing particular items. None of the manufacturers contacted indicated any design features specifically intended to reduce water consumption.

Garbage Disposals

No information on potential water savings for food waste grinders was received from manufacturers. This is understandable since published information indicates that total water consumption in the home is not significantly increased by the use of garbage disposals (16).

Other Fixtures

Except for the devices and features previously described, none of the manufacturers contacted indicated any plans to market fixtures or appliances designed to reduce water consumption. If anything, the comments received indicated that water requirements for household appliances would increase rather than decrease.

HOUSEHOLD FEASIBILITY OF PLUMBING FIXTURES

Cost Estimates

Cost estimates for each type of water savings device were made for both old construction (remodeling) and for new home construction. For old homes, the purchase price of the hardware device, as determined from manufacturers' prices, was used. For new homes the difference in price between the water savings device and the conventional hardware was used.

Installation costs were also estimated for old and new construction. A labor rate of $7.50/hr was used. Installation material (e.g., piping) was included under

material costs. Again, for old homes the total installation labor was used, while for new homes the difference in labor (between the water savings device and the conventional hardware) was used. The cost estimates are summarized in table IX.

Costs for the Liljendahl vacuum flush system were estimated by Eljer (103) for individual homes and for groups of 100 homes. These cost estimates are shown in Appendix IIIA and were used in table IX. This system is not currently being marketed for use by single homes and would require a waste storage tank (about 50 gal.) and a vacuum pump for each home. The tank would be discharged periodically into the main drain line.

The plumbing devices listed in table IX are the following:

1. Shower with limiting flow valves used in place of conventional shower. Maximum flow rate would be 3.5 gpm.
2. Bathroom lavatory with limiting flow valves (hot and cold water) in place of conventional faucets.
3. Kitchen sink with limiting flow valves (hot and cold water) in place of conventional faucets.
4. Aerator faucets for bathroom lavatory and kitchen sink.
5. Water closet with one batch-type flush valve (3.5 gal./flush) in place of the conventional tank. A 3/4" copper tube water line is used in place of a 1/2" line.
6. Water closet with two batch-type flush valves (3.5 gal./flush for solids or 2.5 gal./flush for urine) in place of conventional tank. Again, a 3/4" water line is used.
7. Urinal with batch-type flow valve (1.5 gal./flush) in addition to conventional water closet.
8. Water closet with shallow trap (3.5 gal./flush) in place of conventional water closet.
9. Dual cycle water closet (2-1/2 gal./flush for solids or 1-1/4 gal./flush for urine) in place of conventional water closet.
10. Liljendahl-type vacuum flush toilets (0.5 gal./flush) in place of conventional water closet. Drain lines are 2" plastic pipe. A central collection tank with dual vacuum pumps is used for a group of 100 homes.
11. Same as No. 10 but with tank and vacuum pump for each home.
12. Washing machine with water savings feature such as weighing device and level control for partial loads.
13. Thermostatic mixing valve used in tub and shower.

Water Savings

The quantity of water saved by various hardware devices (as compared to a conventional fixture) was estimated. Results are summarized in table IX. The use of limited flow control valves for showers would give a savings up to 6 gal./person/day, or 24 gal./day for a 4 member household. (Item 1). Limiting flow control valves for the lavatory or kitchen sink result in a relatively small water savings (Items 2 and 3). Aerator faucets for kitchen and lavatory (assuming no dishwasher) could give a savings of 2 gal./day for a 4 member household (Item 4).

The use of batch-type flush valves for toilets (rather than tanks) would result in an average water saving of 1.5 gal./operation. In a household of 4 with 5 uses/day/person, this would give a savings of 30 gal./day (Item 6).

The use of urinals in the home with a batch-type flush valve, assuming 2 male members, and 4 uses per male household member would result in a savings of 3.5 gal. per use or 28 gal./day (Item 8).

The use of the shallow-trap water closet would give a water savings of 7.5 gal./person/day (Item 9).

A dual flush cycle water closet (British type) would result in a savings of 17.5 gal./person/day or 70 gal./day for a 4 member household (Item 10). The Liljendahl vacuum flush system would save 23 gal./person/day (Items 11 and 12).

A washing machine with the suds savings feature or with a level control for small loads could save an estimated 5 gal./cycle. Based on 6-7 loads/week, water savings would be about 5 gal./day (Item 13). The savings with the thermostatic mixing valve would probably amount to less than two gallons per shower which is equivalent to approximately $1.00 per year per person in water, fuel and sewage costs. Since thermostatic mixing valves presently cost about $80.00 and installation would be about $20.00, the thermostatic mixing valve cannot be recommended on the basis of water savings alone. Selection of this device should be for comfort, convenience, and safety; water savings are just a side benefit.

Cost Evaluation of Plumbing Devices

In order to evaluate the relative merit of the various plumbing devices presented in table IX, the following ratios were calculated for each plumbing device:

$$\frac{\text{Total Cost (New Construction)}}{\text{Water Savings (gpcd)}}$$

Obviously, the lower the ratio, the more desirable the plumbing device. Results are presented in table X (in order of decreasing desirability).

Table IX. Water Savings vs Cost For Plumbing Devices

Hardware Device	Water Savings gpcd +	Water Savings gpd*	New Construction Estimated Cost Matl.	New Construction Estimated Cost Installed Cost	Old Construction Estimated Cost Matl.	Old Construction Estimated Cost Installed Cost
1. Limiting Flow Valves for Shower	6	24	15	15	35	50
2. Limiting Flow Valves for Lavatory	0.5	2	25	25	45	68
3. Limiting Flow Valves for Kitchen Sink	0.5	2	25	25	45	68
4. Aerator for Lavatory and Kitchen Sink	0.5	2	2	2	2	2
5. Thermostatic Mixing Valve	2	8	80	90	80	100
6. Batch-type Flush Valve (1) for Water Closet	7.5	30	25	40	75	105
7. Batch-type Flush Valves (2) in Dual Cycle	15.5	62	55	70	120	158
8. Urinal with Batch-Type Flush Valve	7	28	125	148	150	175
9. Shallow Trap Water Closet	7.5	30	20	20	80	110
10. Dual Cycle Water Closet	17.5	70	10	10	100	130
11. Vacuum Flush Toilet (100 Homes)	22.5	90	-	(110)**	-	295

\+ gal/capita-day (gal/person/day)
* 4 member household
** Negative cost, i.e., cost reduction

Table IX. (Cont'd)

Hardware Device	Water Savings gpcd +	Water Savings gpd*	New Construction Estimated Cost Matl.	New Construction Estimated Cost Installed Cost	Old Construction Estimated Cost Matl.	Old Construction Estimated Cost Installed Cost
12. Vacuum Flush Toilet (Single Homes)	22.5	90	-	1115	-	1520
13. Washing Machine with Level Control	1.2	5	35	35	35	35

\+ gal/capita-day (gal/person/day)

* 4 member household

** Negative cost, i.e., cost reduction

From these results the following conclusions are drawn:

1. Limiting flow valves appear to be justified for showers and should be further considered.

2. The vacuum flush water closet can only be justified (economically) for groups of homes or multi-family dwellings.

3. Of the various water closets and urinals considered, the dual cycle water closet appears to be the best approach for sanitary waste and should be further considered.

4. Aerator faucets, where not already in use, should be required.

5. The other plumbing devices listed do not appear to be warranted.

The above conclusions are tentative in that they are based on the cost/water savings ratio only. Obviously, there are other important considerations, e.g., consumer acceptability (see section VII). The most desirable plumbing devices are discussed further in section VI and compared with other alternatives, such as water treatment and reuse.

Although the available data indicate that the vacuum flush toilet system has many economic and water conservation advantages, the group application of the vacuum flush system will not be considered further in this study since our primary concern is for problem solutions that can be undertaken by individual homeowners. It is, however, recommended that further studies be conducted and the results made available to contractors and real estate developers who work with multiple dwelling unit systems.

Table X. Cost Evaluation Ratio

$$R = \frac{\text{Total Cost (New Const.)}}{\text{Water Savings (gpcd)}}$$

Item No. (From table IX)	Hardware Device	R
11.	Vacuum Flush Toilets (100 Homes)	(4.9)*
10.	Dual Cycle Water Closet	0.6
4.	Aerator Faucets for Sinks	1
1.	Limiting Flow Orifice for Shower Head	2.5
9.	Shallow Trap Water Closet	2.7
7.	Batch-type Flush Valves (2) in Dual Cycle	4.5
6.	Batch-type Flush Valve (1) for Water Closet	5.3
8.	Urinal with Batch-Type Flush Valve	21
13.	Washing Machine with Level Control	29
5.	Thermostatic Mixing Valves	45
2.	Limiting Flow Valves for Lavatory	50
3.	Limiting Flow Valves for Kitchen Sink	50
12.	Vacuum Flush Toilet (Single Homes)	50

*Negative Cost, i.e. cost reduction

V

POSSIBLE TECHNIQUES FOR IMPROVEMENT OF HOUSEHOLD WASTE TREATMENT

There was little progress in water and waste treatment technology for thousands of years. The ancient Egyptians knew the principles of most of our present methods for purifying drinking water such as filtration, carbon adsorption, exposing to sun light, and filtration. Although sewage was generally not even treated until after the middle of the nineteenth century, the water and waste treatment methods most common today (filtration, sedimentation, disinfection and biological treatment) were all in practical use by the early 1900's.

Today these methods are no longer sufficient to treat the large quantities and high concentrations of wastes from our cities and industries. Many locations already require almost complete waste water renovation to prevent nuisance conditions in the surrounding waters.

To meet these more stringent treatment demands, additional technology is being developed and borrowed from other disciplines. The government has initiated many of the new developments through its own research laboratories and the sponsorship of private research and development. The government has been instrumental in many developments through its support of aerospace and ocean exploration programs which require exacting water and waste management systems and through sponsorship of research on advanced waste treatment techniques and in the demineralization of saline waters.

The marine industry has long been confronted with the problem of limited fresh water and the disposal of wastes. For years, the practice in all sizes and types of watercraft was simply to discharge sanitary wastes overboard and depend on the dilution capacity of the body of water to render the wastes harmless and inoffensive. Although this practice was acceptable at first when there were very few boats and relatively little waste matter, the numbers of watercraft have increased rapidly, especially in the recreational field, and the wastes discharged are no longer negligible. Also, watercraft waste discharges are usually concentrated in certain areas and at particular times (summer, weekends, holidays) which usually coincide with the heaviest water usage for fishing, swimming, and other water contact sports. The marine industry has attempted various methods for solving this problem. These methods range from relatively simple methods (closing marine toilets and not using them, the grinding and disinfection technique, and simple holding tanks) to complex combination electrochemical treatment devices (38).

The aerospace industry has also been concerned with water supply and waste disposal, and the demanding requirements for forced long term isolation have spurred intensive efforts for the development of self-contained water supply and waste disposal systems. Water is the heaviest single item required for man's survival (approximately 2500 g. per man per day) and soon becomes a limiting factor unless the water is reused (76). Thus the very feasibility of space exploration is dependent on water reuse.

Although most of the devices and processes discussed are presently too complicated and too expensive for the average household, it is believed that a brief presentation is warranted because this status may be greatly changed in the next ten to twenty years. The Ontario Research Foundation of Canada conducted a study on the use of some of these techniques for the complete renovation and reuse of water in a housing complex for one thousand persons. The technical and economic study indicated that such a system would be feasible at the present time in water short isolated areas or areas with very rough terrain (12). The United States Army is developing portable water and waste management systems utilizing many of these techniques for use in a mobile field hospital, and for use in advance military headquarters (37, 52). It must be remembered, however, that in such large housing complexes and in special service units, skilled personnel should be available at all times, and that the same economics would not prevail in smaller units. However, continued progress in instrumentation and automatic control could make some of these processes feasible for the individual home in the near future.

Applicable advanced treatment processes are discussed briefly below. They are, for convenience, grouped as change of phase processes, membrane processes, electrolytic processes, and miscellaneous processes. The processes are first described and then discussed as to their feasibility for household use. In the following sections, the feasibility of using these techniques for household treatment, either as a total process or as a means of improving the effluent from current treatment units (septic tanks and aerobic treatment devices) will be explored.

CHANGE OF PHASE PROCESSES

Liquid to Vapor Phase Changes

In distillation and evaporation processes, the separation of the water from the impurities is effected by the change of phase from liquid to vapor and back to liquid again. Only those substances that significantly vaporize at the pressure and temperature of the distillation or evaporation apparatus undergo the same phase changes and appear as significant pollutants in the product water.

Actually, evaporation and distillation are identical processes but they have slightly different connotations in practice. In both cases, separation occurs due to the changes in the relative composition of the liquid and vapor. The rate at which the liquid enters the vapor phase is dependent on the rate of heat transfer, the rate at which the vapor is removed, and the relative composition of the liquid phase.

An air evaporation technique utilizing waste equipment heat has been studied by several investigators. McNeil (56) investigated an evaporator system to dispose of urine aboard aircraft, but the product was still corrosive (93). Since then, other investigators have reported a considerably better product which could be rendered potable by varying degrees of auxiliary treatment with chemicals, ion exchange, and activated carbon (76, 69). In a 60-day manned test of a closed life support system an air evaporation unit successfully reclaimed water from urine and humidity condensate for a crew of four men (43). For aerospace applications, the major disadvantages of the air evaporation system are the large surface areas (3.5 sq. ft. per man reported by Wallman and Barnett (93) required for sufficient heat transfer and the storage and disposal of the wicks used to provide these large surface areas.

For the household use of an air evaporation system, the problems of weight and storage space which were considered limiting for aerospace applications do not seem to be as significant. However, it must be remembered that the systems considered for aerospace use were designed to process less than one gallon per man per day, whereas we are contemplating a use of more than sixty gallons per person each day. Also, one of the major advantages of the system for spacecraft, the use of waste cabin and equipment heat which would otherwise be expelled to space, is not possible in most homes. Thus in the normal household, rather than 3.5 square feet of wick area per person, approximately 220 square feet would be required and power would be used at the rate of 338 watt-hours per pound of water produced ($56.50 per 1000 gal.) (69). The water evaporated from raw wastes could be easily disposed of, but would require further treatment (e.g. filtration, adsorption, sterilization) before any reuse because of possible microbial contamination and probably odors. A household system would additionally require a collection tank, a blower, and heating and condensing equipment.

The wastes from this process should be solid and easily handled though they would probably have a disagreeable odor.

Distillation can be carried out at various interdependent temperature and pressure combinations depending on the product desired. Generally, low pressures are utilized to permit low temperatures and limit the decomposition and volatilization of organics. In some units, the vapor is compressed without cooling so that the heat of vaporization can be more easily utilized in the distillation unit (vapor compression distillation). As with air evaporation, however, the product water still requires additional treatment before it is judged potable. Membrane vapor diffusion is another distillation process in which a semi-permeable membrane is used to contain and separate the impure liquid from the vapor phase. The heated liquid diffuses through the membrane and evaporates on the outer surface. An important advantage with this system for aerospace use is its operability at zero gravity. With further membrane improvements, the membrane vapor diffusion system should be competitive with vapor compression (48). One method of additional treatment is to catalytically

oxidize the vapor before it is condensed (6, 32). The major disadvantages of the distillation schemes for aerospace use are the high power and weight requirements (relatively speaking) and the danger of gas leaks in systems that operate at other than ambient pressure (82).

A household system for distillation would require a collection tank, a solids separator (possibly included in the storage tank), and probably a final filtration, adsorption unit which would render the effluent suitable for all uses except drinking. A vapor compression distillation system which conserves the heat of vaporization required 35.3 watt hours per pound of water produced, (69) or $5.90 per thousand gallons of water. Steele (82) reported a power expenditure of 42.8 watt hours per pound or $7.15 per thousand gallons. Studies on a vapor compression unit designed for household use by Dr. Hickman of Rochester Institute of Technology reported operating costs of about $1.30 to $2.00 per thousand gallons (10). The yield from this unit which is limited to dilute wastes, is only about 1/3 to 1/2 the input. Operation of a distillation unit would depend on the close control of a number of variables and would probably present household problems. The waste from a distillation system would be a dry sterile residue which could be easily handled or a concentrated liquid. There would also be the problem of disposing of the solids separated from the waste water in the initial treatment step. These could probably be treated similarly to septic tank solids.

Liquid-to-Solid Phase Changes

Pure water freezes at a higher temperature than a mixture of water and wastes. Thus when the water-waste mixture is slowly cooled, pure crystals of water form. The problem is to separate the crystals of pure water from the waste mixture entrapped in the crystal interstices. Various techniques to obtain this separation are being investigated. Multi-stage counter-current washing has been effective in large scale operations, but at present, the technique appears uneconomical for aerospace application (106, 82). Zone refining is another variation of the freezing process in which a column of water, waste mixture is frozen; then a moveable heating element forms a band of liquid which is moved along the column concentrating impurities in the liquid phase (76). The process may be repeated for increased purification. Other freezing processes that have not been significantly developed are column crystallization and counter current crystallization (82). The major objections to these techniques are the low percentage of water recovered and the problems of separating the ice from the water-waste mixture.

In addition to cooling equipment the processes involving solid liquid separation will require elaborate separation equipment. Work with freezing techniques involving liquid solid separation for waste water renovation has been relatively unsuccessful due to the difficulty of separating the pure ice from the waste water. Studies at the Robert A. Taft Sanitary Water Research Center on freezing techniques for the renovation of waste water were halted because of the relatively high process costs. Besides the high costs, the freezing techniques require constant control and supervision to insure quality. Most homes could not supply this supervision.

Solid-to-Vapor Phase Changes

At low temperatures and pressures, water can be changed directly from a solid to a vapor without passing through the liquid phase. This sublimation or freeze drying process is rapidly becoming an important food preservation process. The low temperatures limit organic decomposition and volatilization to insure a relatively high quality product. Virtually all the water is recoverable, and the waste materials remain in the solid state, thus facilitating waste handling and reducing leakage problems (82).

The processes involving vapor sublimation from the solid ice will require vacuum apparatus and vapor condensing equipment.

The system involving the solid to vapor phase change has demonstrated the capability of producing a good quality water. Energy equal to the energy difference between the solid and liquid must be removed from the waste water to produce ice, and then just enough energy must be added to change the solid to a vapor from which the water is then condensed. The household cost of these processes is estimated to be at least (assuming 80% power recovery) $10.90 per thousand gal. and would yield water suitable for any use but drinking.

The waste residues from the process could be easily handled and stored until centrally collected.

MEMBRANE PROCESSES

Membrane processes require no phase change; they depend on membrane selectivity to separate the water from the wastes. The membrane acts as a filter to exclude all particles larger than its pores, and as a diffusion medium which governs the rate at which soluble substances pass through it. By altering the structure and composition of the membrane the substances passed by the membrane can be selectively controlled. The membrane mechanically restricts the passage of any substance and a force is necessary to drive a substance through the membrane. Additional energy is required to overcome the concentration dependent osmotic pressure. Mechanical, electrical, thermal, and concentration gradients have been successfully used as the driving force in various applications. One major problem with the membrane purification process is that the practical limit to which the wastes can be concentrated is much lower than the concentration at which the wastes can be easily handled and disposed of. However, membrane processes theoretically require less energy than the phase change processes, and much water treatment research is directed toward solving or by-passing the problem areas of membrane technology. Spectacular results are also being predicted for the application of membranes in many different fields: medical technology (artificial organs), photographic equipment, batteries, etc. (57). The concentrated efforts in these varied fields could hasten the discovery of solutions to membrane problems.

Reverse Osmosis

Originally, ultrafiltration was used to denote microstraining and reverse osmosis was used for the process utilizing activated diffusion. Ultrafiltration membranes are rapidly clogged, however, and there is a tendency to use reverse osmosis membranes for ultrafiltration. As a result, the two terms are sometimes used interchangeably to describe the forced solvent flow through a membrane from a high solute concentration to a low concentration in opposition to the natural concentration gradient. Considerable research is being conducted to perfect reverse osmosis techniques for industrial processing and for treatment of various industrial and municipal waste streams (65).

Although reverse osmosis has the capability of removing non-ionic material as well as ionic species, probably its first household usage will be for the removal of ionic species. A household unit for demineralizing water and which operates on the water line pressure has already been developed and is projected to be sold for approximately $125 and to treat the water at a cost of about $8.20 per thousand gallons (63). One manufacturer has begun promotion of its version of a small reverse osmosis system to remove taste, odor, color and sediment. Costs are estimated at seven cents per gallon ($70.00 per 1000 gal.). The cost of treating more concentrated wastes would be significantly higher because of the higher osmotic pressure of the wastes and the additional equipment that would be required. The wastes from a reverse osmosis treatment unit would be a concentrated liquid with properties dependent on the wastes being processed. The product water could be used for all household purposes except drinking.

Electrodialysis

Electrodialysis is a membrane technique in which the driving force is electrical potential. Membranes can be prepared to pass only cations or anions, and a solution placed between an anion permeable membrane and a cation permeable membrane and subjected to an electrical potential can be effectively depleted of ionic solutes. However, nonionic species are not affected. The main disadvantages of electrodialysis are the additional purification processes that must be used to remove uncharged particles and particles too large to pass through the membrane (81). A variation of electrodialysis, the osmionic process, utilizes ion permeable membranes to produce electricity for electrodialysis. Ions flow from a concentrated salt solution to dilute solutions through cation and anion selective membranes, creating an electrical potential between the dilute solutions which is then used for conventional electrodialysis. This process requires large quantities of the salt solutions, and like electrodialysis produces dilute wastes, and a product that still requires additional treatment (83, 11).

Thermo-osmosis utilizes a temperature gradient to drive the water through the membrane. When solutions of different temperatures are placed on opposite sides of

a semi-permeable membrane, there is usually some transport of water from one solution to the other. The rate of water transport is determined by the temperature difference and the thermal characteristics of the membrane itself (93).

Electrodialysis or related techniques could only be a part of a water treatment scheme since they remove only ionic species. The power required for such a system is a function of the quantity of ions in solution. The cost of power has been estimated at $8.50 per thousand gallons for the electrodialysis of treated urine and at approximately $1.00 per thousand gallons (extrapolation of data by Smith, (77) for the effluent of a secondary treatment plant. The wastes to be disposed of will be concentrated salt solutions.

ELECTROLYTIC PROCESSES

Electrolytic waste treatment plants attracted a great deal of interest in the late 1800's and early 1900's. The most famous process was the Landreth method in which the waste water was heavily dosed with lime and then subjected a direct electrical current. The effluent was described as clear, odorless and non-putrescent. There was some question as to whether the same degree of treatment could be obtained with the concentrated lime dosage alone (58).

The Pennsalt Chemical Corporation, under contract to the Public Health Service, completed an extensive study of electrochemical treatment of secondary treatment effluent. This study concluded that the system was uneconomical (a cost in a 10 mgd plant of $.90 to 2.40 per 1000 gal.) because of the low conductivity of the water.

The electrolytic process is being investigated for treatment of raw sewage by chemical coagulation of suspended solid material and chemical treatment of the liquid in Norway and Italy. The sewage and sea water are mixed and electrolytically decomposed. As hydrogen is released, the increasing hydroxyl concentration permits stable formation of practically insoluble magnesium ammonium phosphate and calcium phosphate precipitates and the flocculent precipitate of magnesium hydroxide. The magnesium hydroxide flocs occlude other suspended solids, and the flocs are floated to the surface by the hydrogen gas formed. The oxygen and chlorine released at the cathode also help to disinfect the product water (35).

The equipment required for this electrolytic treatment would include a rectifier to supply direct current power, electrodes, a waste collection system, and a sludge collection and disposal system. In an attempt to avoid the high power costs for water of low conductivity, the idea of adding chemicals to approximate the conditions used in the Norwegian and Italian studies was briefly investigated. However, the cost of chemical addition would again raise the operating cost to at least the $2.00 per thousand gallons of waste treated as quoted for the low salt domestic wastes. The effluent from the pilot plants constructed in Norway (35) was apparently high

quality with a very low number of bacteria. After filtration the effluent could possibly be used for all household purposes except drinking. The sludge produced could probably be handled similarly to septic tank solids.

The U.S. Navy is testing a device which mechanically separates and incinerates waste solids, which are transported by a seawater flush, and electrolytically treats the remaining liquid. Electrolysis produces minute bubbles of hydrogen, oxygen, and chlorine which float suspended solids to the surface where they are skimmed off. The chlorine and oxygen additionally act as oxidants and are effective in the control of disease causing microorganisms (44). This unit has been extensively tested and when not plagued by minor mechanical difficulties has bettered effluent standards of 1000 coliform/100 ml, 50 ppm BOD, and 150 ppm suspended solids.

An electrolytic method is also being investigated by the space agency as one of the steps in the processing of urine for reuse. This method utilizes an electrochemical oxidation process to decompose urea and other organics into hydrogen, nitrogen, and carbon dioxide. It is expected that a combination of this method with electrodialysis can produce acceptable product water from urine at a total operating cost of about 190 watt-hours per pound (approximately $31.70 per thousand gallons). The equipment would also be relatively expensive (5).

In another electrolytic process proposed for an aerospace system, the water and waste mixture is electrolytically decomposed to hydrogen at the cathode and oxygen at the anode. When the oxygen and hydrogen are recombined, pure water is formed. When the two gases are combined by combustion, the high temperatures attained are sufficient to completely oxidize any volatile organics. Another approach is to recombine the oxygen and hydrogen in a fuel cell to obtain useable electrical power, which would partially offset the power required for electrolysis, (4, 6).

Such an electrolysis system would require a waste collection system, a source of direct current, and a device to recombine the hydrogen and oxygen to produce water. A fuel cell could be used to recombine the hydrogen and oxygen and recover some of the power, or if the hydrogen and oxygen were recombined by combustion, heat recovery could be practiced to conserve power. Suitable equipment is not readily available but operating costs can be roughly estimated (assuming 75% power recovery) to be approximately $70.00 per thousand gallons. The recovered water could be used for all purposes and the waste would be relatively easy to handle; but the excessive power requirements and present inefficiencies in power recovery apparatus should make further analysis of this system unnecessary in this study.

MISCELLANEOUS PROCESSES

Oxidation

Oxidation is the process which currently dominates the domestic waste treatment field. Biological oxidation is used in sewage treatment almost exclusively and chlorine chemical oxidation is the most popular method of water disinfection. Organic wastes

are oxidized to carbon dioxide, water, and oxides of nitrogen and other elements. New techniques of inducing oxidation and new or less expensive oxidants may permit more effective water and waste treatment in the future. A comprehensive listing of oxidants for waste treatment is included in the series of studies for Advanced Waste Treatment by the Federal Water Pollution Control Administration (1). One company has reportedly developed a system utilizing gamma radiation to induce oxidation for a home sewage treatment unit (Chemical and Engineering News, April 21, 1969). We have no additional information on this unit, but the AWTR-19 Summary Report (2) estimated that in large installations the cost would be least $0.50 per 1000 gal.

At high temperatures and pressures organic material in a liquid suspension can be rapidly oxidized by oxygen in a pressurized apparatus. This technique, wet oxidation, is gaining acceptance for the treatment of municipal sewage sludges and is being tested as a method of shipboard sewage treatment (38, Marine Engineering Log, 1967). The process has also been tested for aerospace use in the treatment of waste solids collected from other water purification systems and for the recovery of water in feces (98).

Simple incineration has been successfully used to oxidize human wastes in isolated locations and has been suggested for use on watercraft. However, an air pollution problem could be expected if the use of incineration became common. The problem may not, however, be much more acute than the air pollution from individual heating units.

For the household, the oxidation techniques that seem most likely to be used in the near future are the oxidation of waste solids by incineration and chemical oxidation for disinfection of treated water. Incinerator toilets capable of disposing the sanitary wastes from an eight member family are commercially available; some can even accommodate the rinsing of diapers. The incinerator toilets can effectively eliminate water pollution problems but introduce the possible danger of air pollution. Using manufacturers' data on fuel and power consumption and assuming normal usage, the operation of the incinerator toilet would average slightly more than $17 per person per year and cost $400 to $600 for purchase and installation.

The use of the wet oxidation technique to treat wastes of the nature and volume of household wastes would cost about $40.00 per thousand gallons. The effluent would be stable but not fit for any reuse without extensive additional treatment.

Chemicals have been widely used for disinfection and many different types of equipment are available to dispense disinfecting chemicals. Chlorinators, for example, can be purchased for $150 to $600 and operated for approximately $0.08 per thousand gallons of water treated.

Chemical-Mechanical Removal of Contaminants

Many of the mechanical means of water and waste treatment such as sedimentation, filtration, and adsorption can be aided by the addition of proper chemicals. Lime and soda ash are used to precipitate the ions causing hardness in water. Aluminum and iron salts are used to coagulate suspended and colloidal solids prior to sedimentation or filtration. Still other chemicals, such as activated silica and various polyelectrolytes, are used to aid coagulation by stimulating the formation of floc particles. Activated carbon is commonly used in the removal of taste, odor, and color by adsorption. The series of publications by the Taft Sanitary Engineering Center on advanced waste treatment research provides an extensive discussion on the use of these chemical-mechanical techniques in the treatment of waste water.

Chemical coagulation and activated carbon adsorption were the treatments chosen in a study for the U. S. Army on the renovation and reuse of kitchen, laundry and shower wastewaters for all purposes except drinking and food preparation (37).

A system utilizing coagulation, sedimentation, filtration, and carbon adsorption has been developed to treat the waste water from coin operated laundries, (85). A similar system installed in the Virgin Islands is reportedly treating the laundry waste water for reuse.

New innovations are also being applied in simple filtration. Multimedia filter beds have been developed to achieve longer filter life and more efficient utilization of the filter depth. New filter systems have been developed to remove even bacterial sized particles. A study of water reclamation techniques for aerospace use showed a multifilter system (particulate removal, carbon adsorption, and ion exchange) to be most suitable for reclamation of the wash waters and dehumidification condensate on space voyages of intermediate lengths (94).

Most of the chemical-mechanical contaminant removal techniques are relatively inexpensive when applied on the scale of community water treatment plants, but become increasingly costly in small installations because of the chemical handling costs and the supervision required. To date, few automatically controlled systems have been marketed for household use. Filtration is practiced in rural areas to treat water supplies of uncertain quality for household use. Slow sand filtration and filtration through commercially available pressure filters of sand, carbon and prefabricated cartridges were evaluated in a study at the Ohio Agricultural Experiment Station (42). A slow sand filtration apparatus could be supplied for approximately $120.00 and could be operated for 1¢ to 2¢ per thousand gallons (not including the cost of pumping water from the filter). Pressure sand filters require less space than slow sand filters but are more expensive to operate and produce a lower quality effluent. Pressure sand filters are sold for about $120.00 and process the water at approximately 10¢ per thousand gallons. Cartridge filters are available for many filtration tasks. Swimming pool filters including pump are available at $130.00 and filter gross solids at a cost of approximately $.07 per thousand gallons. Other cartridge filters are available to remove various solids down to 0.5 microns in size.

Collection and Storage

Collection and storage of wastes until a disposal site is available has been practiced by airlines and watercraft for years. The wastes are merely stored until they can be disposed of. Obviously, as the volume to be disposed decreases, the time between dumping increases and the economy is greater. One commercial company now offers a water closet which recycles disinfected flushing water and reportedly collects and stores wastes from 80 to 100 uses when primed with only four gallons of water (38). Systems for collection and storage of waste are widely used for boats, travel trailers, and long distance trains, busses, and aircraft. Removal and disposal of the collected wastes is a nuisance most people would not tolerate in their homes. Any system for the home should therefore be designed for direct discharge to sewer or septic tank. Such a recycle toilet with a discharge pump can be purchased for approximately $280.00 and can be operated for about $.01 per flush including disinfection (a yearly cost of $18 to $19 per person). Laboratory tests indicated that the chemical used for disinfection would not hinder either anaerobic or aerobic treatment of the collected wastes.

Solvent Extraction

Solvent extraction is a process in which the water, but not the contaminants, is dissolved in a solvent. The water-solvent solution is then separated from the mixture and separated from each other by distillation (103). Solvent extraction does not appear suitable for adaptation to household use. The method requires an extraction column which must be maintained at the proper temperature, a tank in which to separate the water-solvent solution from the waste mixture, and distillation apparatus to remove the water and recover the solvent. Also, pilot plant installations have experienced difficulty in completely removing the solvent after treatment. Preliminary cost estimates for the solvent extraction technique in large installations approach $.50 per thousand gallons. Household operation would be much more costly.

Solid Hydrate Formation

Certain hydrocarbons will form addition compounds with water which are called hydrates. The hydrates are solids that can be separated from the water-waste mixture by filtration. This process thus depends on a fine straining process following the hydrate formation. As in the freezing process temperature and pressure control and separation of the solid phase from the mother liquid pose significant problems which are being studied at industrial and institutional laboratories (76, 62).

The hydrate technique of water purification involves most of the same problems encountered in the conventional freezing processes. In addition, provisions must be made to recover and recycle the hydrocarbon after it has been removed from the water. Temperature and pressure control are also essential in the hydrate formation. Operating costs would probably be at least as high as those of the freezing techniques.

Maceration-Disinfection

Maceration-disinfection is a technique with little value for the prevention of pollution by treatment of wastes, and its capability for disease prevention through disinfection is often questionable. Maceration disinfection has been used to treat wastes from watercraft by grinding the wastes to small sizes and adding a disinfectant to kill bacteria. The process has been only partially successful in that the grinding is not always complete and the disinfection is not completely effective. In addition, the treatment does not remove or effectively change any of the polluting substances (38).

VI

ENGINEERING STUDY AND EVALUATION OF PROCESSES FOR WATER CONSERVATION AND WASTE TREATMENT

This section explores the practicality of the various combinations of current water and waste treatment techniques which appear promising for the flow reduction or treatment of household waste waters. Rather than making a detailed examination of all the possible systems, the large number of treatment or flow reduction techniques was first reduced by a qualitative evaluation. Then a technique for the comprehensive analysis and evaluation of household water and waste systems is developed and applied to some of the treatment schemes already discussed.

Tables XI and XII list the various means discussed for reducing water usage and the various techniques for treating the wastes produced. There are hundreds of different ways in which the water conserving devices and the various treatment techniques could be integrated into a household water and waste handling system. To facilitate the screening of all the possible systems for water and waste handling, the problems associated with possible changes in the present water and waste water systems were analyzed. The typical home plumbing system (figure 2), the uses made of water at each of the supply points (table II), and the pollutants introduced at each drain (table VII) were evaluated to determine a relative order for the quality of water required at each supply point (table XIII). A comparison was then made of the quality of the various effluent streams and the quality required at the supply points so that the treatment required for reuse could be estimated.

Figure 9 shows the whole realm of reuse possibilities for household water-waste systems. Technically, the reuse of waste water from any appliance or drain is possible, though possibly not economically or aesthetically feasible, at any supply point or for any purpose if it is given suitable treatment and a suitable piping system. In the figure, we have used explicit criteria for the decision as to the feasibility of using waste waters from the various sources at the various points of use. For example, water from the bathtub or shower drain for reuse in the washing machine is coded S_A, the S meaning suitable with a minor degree of physical and chemical treatment, and the subscript A indicating that there may be aesthetic grounds for not using this reuse combination.

Assumptions used throughout this evaluation section were (1) that reclaimed water would not be used for drinking and cooking, (2) that water from any outlet may occasionally be ingested, and (3) that homeowner acceptance of dirty looking water will be low even though it might be suitable for its intended use. Thus, the water

Table XI. Water Savings Plumbing Devices

Hardware Device	Water Savings gpcd +	Estimated Installation Costs Matl. $	Labor $	Total $
1. Limiting Flow Valves for Shower	6	35	15	50
2. Limiting Flow Valves for Lavatory	0.5	45	23	68
3. Limiting Flow Valves for Kitchen Sink	0.5	45	23	68
4. Aerator for Lavatory and Kitchen Sink	0.5	2	0	2
5. Batch-type Flush Valve (1) for Water Closet	7.5	75	30	105
6. Batch-type Flush Valves (2) for Water Closet	15.5	120	38	158
7. Urinal with Batch-Type Flush Valve	7	150	25	175
8. Shallow Trap Water Closet	7.5	80	30	110
9. Dual Cycle Water Closet	17.5	100	30	130
10. Vacuum Flush Toilet (for 100 Homes)	22.5	-	-	295
11. Vacuum Flush Toilet (for Single Homes)	22.5	-	-	1520
12. Washing Machine with Level Control	1.2	35	0	35
13. Recycle Toilets	24.7	300	25	325

+ gal/capita-day (gal/person/day)

Table XII. Techniques For Treatment Of Waste Waters

Technique	Estimated Average Costs (from data in the literature): Equipment & Installation Cost	Operating Costs per Thousand Gallons Not Including Amortization	Comment
Anaerobic Treatment	$1100	Less than $0.01	Most common method of waste disposal
Aerobic Treatment	1200	$ 0.60	
Air Evaporation	700 *	56.00	Treatment of all Wastes
Distillation	1000	4.00	Cost for mineral removal only
Freezing	1000 *	8.00	
Electrodialysis	150	1.50	Mineral removal only.
Reverse Osmosis	150	8.00	Cost for mineral removal only
Electrolytic Treatment	500 *	2.00	
Electrolysis	300 *	70.00	
Incinerator Toilets	500	17.00 per person/yr.	
Wet Oxidation	1000 *	40.00	Usually used for concentrated wastes
Disinfection	200	0.05	
Gravity Sand Filtration	120	0.02	
Pressure Sand Filtration	120	0.10	
Cartridge Filtration	130	0.10	
Solvent Extraction	----	10.00	Unsuitable

*household sized systems not commercially available.

Table XII. (Cont'd)

Estimated Average Costs (from data in the literature)

Technique	Equipment & Installation Cost	Operating Costs per Thousand Gallons Not Including Amortization	Comment
Gas Hydrate Formation	$----	$ 10.00	Unsuitable
Maceration Disinfection	110	50.00 per person/yr.	Unsuitable
Coagulation, filtration	600 *	3.30	Treatment of all wastes
Carbon filtration adsorption	600 *	1.60	Cost for treatment of non sanitary wastes only

*household sized systems not commercially available.

Table XIII. Relative Levels Of Water Quality Requirements

Order of Water Quality Requirements (Highest Quality First)

1. Drinking and Cooking
2. Dishwashing
3. Bathing
4. Clothes Washing
5. Household Cleaning and General Purpose
6. Toilet Flushing

Order of Supply Points as Related to Water Quality Requirements

1. Kitchen and Bathroom Sinks, Hot Water Heater
2. Dishwasher
3. Shower, Bathtub, Set Tub
4. Washing Machine
5. Outdoor Faucet, House Heating System
6. Toilet Bowl

Potential Household Water Sources

		Potable Supply	Sink (Kitchen)	Sink (Bathroom)	Dishwasher	Laundry	Shower or Bath	Toilet	Point of Water Use
		✓	X_{HA}	X_{HA}	X_{HA}	X_{HA}	X_{HA}	X_{HA}	Sink (Kitchen)
		✓	X_{HA}	X_{HA}	X_{HA}	X_{HA}	X_{HA}	X_{HA}	Sink (Bathroom)
		✓	X_{HA}	X_{HA}	X_{HA}	X_{HA}	X_{HA}	X_{HA}	Water Heater
		✓	X_{HA}	X_{HA}	S_{HA}	X_{HA}	X_{HA}	X_{HA}	Dishwasher
		✓	SD_{HA}	SD_{HA}	SD_{HA}	SD_{HA}	SD_{HA}	X_{HA}	Shower or Bath
		✓	S_A	S_A	S_A	S_A	S_A	X_{HA}	Laundry
		✓	SD_{HA}	SD_{HA}	SD_{HA}	SD_{HA}	SD_{HA}	X_{HA}	Outdoor Faucet
		✓	SD_E	SD_E	SD_E	SD_E	SD_E	X_E	House Heating Sys.
		✓	S_A	S_A	S_A	S_A	S_A	X_{EA}	Toilet

Treatment Required Before Use:

✓ No treatment required
D Disinfection
S Minor chemical and physical treatment
X Complete renovation

Reasons for Treatment:

H Health
E Engineering
A Aesthetic

Figure 9. The Reuse Potential of Household Waste Water

for any reuse must be biologically safe and contain no chemical substances considered dangerous to health when accidentally consumed. Also the water supplied to any point in the system where drinking or cooking water is commonly drawn must be connected to a drinking water supply. For example, both hot and cold water supplied to the bathroom and kitchen sinks must be taken from a safe drinking water supply.

Present practices would dictate that only two classes of water could be used in the household. Most people have at some time obtained water for drinking from every supply point in the house (bathtub, shower, laundry, outside faucet) except from the water closet; and, therefore, if present practices are to continue, the only purpose for which non-potable water could be used would be toilet flushing. Present practices could be changed, however. People could be educated not to use all the supply points for drinking. Dual quality water systems have been used in some areas for years. In sections of the West brackish water systems are used for many non-critical purposes to conserve a limited fresh water supply. Many ships use a seawater system for toilet flushing, deckwashing, and fire fighting. To encourage the safe use of multiple quality water systems, a reminder of the lower quality, such as color, odor, or taste, could be added to the water; in addition the outlets themselves could be colored or shaped differently. Some people may point out that small children may not recognize these danger signals; but this danger would be no greater than in the present situation in which the water supply most accessible to small children is in the toilet.

PRELIMINARY ECONOMIC ANALYSIS

After review of the problems and the requirements that must be met, the various systems were then subjected to a preliminary economic evaluation. Most people are interested in pollution abatement and are willing to encourage the spending of government money in the pollution abatement program. However, they are much less willing to spend their own money for a private pollution control measure when their neighbors are not also compelled to do so. Thus, few homeowners are likely to put any device into their homes that is not specifically required by law, unless it can be shown that the device will cost less (or at least not more) and will require very little, if any, more maintenance than their present system.

For this reason, all the treatment techniques considered in the previous sections were examined from an order-of-magnitude cost viewpoint to eliminate those schemes that would be economically unacceptable to the average homeowner. Each proposed treatment or waste reduction system is compared to the cost of the present water and sewerage system at homes with central water and sewerage and at homes with septic tank systems on good, fair, or poor soils.

The cost figures were taken from many sources including reports from the Office of Saline Water, the Public Health Service and the Federal Water Pollution Control Administration. All assumptions were slanted toward making the processes less expensive, so that no process would be unnecessarily eliminated.

The general assumptions used throughout the comparison were:

a. Each system will be installed in an "average" home as described on page 8 with a four member family having an "average" water use of 255 gallons per day distributed as follows:

   27 gal. kitchen & drinking

   88 gal. bathing & hygiene

   40 gal. laundry & cleaning

   100 gal. toilet flushing

b. Electrical energy - $0.02/KWH

c. Fuel oil - $0.15 per gal.

d. Water rate - $0.42 per 1000 gal.

e. Sewerage rate - $0.44 per 1000 gal.

f. Cost of septic tank soil absorption - as discussed on page 42.

The results of the cost comparison are shown in table IVA included in the appendix.

In this table, column (1) represents the annual per person cost of purchasing, installing, operating, and maintaining the waste treatment or flow reduction system. Column (2) is the average annual cost of the water used per person, column (3) is the average annual per person cost of disposing of the waste water; and column (4) is the total yearly cost of water and the disposal of waste water for one person. Column (5) compares the total cost of the system being considered with the cost of the conventional systems now being used. (Item 1).

Each new system evaluated is considered for installation in comparison with four generalized conventional systems: (a) in areas having sewer service and average water costs, (b) in areas having soil absorption systems in good soil, (c) in areas having soil absorption systems with fair soil, and (d) in areas having soil absorption systems with poor soil. (soil classifications according to Thomas (87)). In addition (e) shows effect of a low water rate ($0.20/1000 gal.) and (f) shows the effect of a very high water rate ($1.50/1000 gal.) for the system with sewers.

This brief economic analysis provided many enlightening comparisons and permitted recommendations for the further investigation or the elimination of various schemes. The information from the cost comparison table is summarized below:

1. Reduction of water usage appears to be economically the most feasible means of reducing waste flow from the home.

2. Flow control faucets are of marginal value when replacing workable faucets, but are definitely warranted for new homes and for necessary replacements. Faucet aerators would apparently be a useful addition to all faucets for convenience as well as water savings.

3. Flow control showers are an inexpensive means of economically saving considerable quantities of water.

4. The use of pressure flush valves to reduce water flow does not appear as advantageous as the redesign of the toilet bowl to allow adequate flushing with less water.

   The pressure flush valve could be advantageously used with the redesigned toilet bowl. Siphons, as used in the English water closets, would also provide better volume control than the system presently used in the United States.

5. The vacuum flush toilet for the individual home is too expensive because of the high cost of the accompanying equipment when used for single homes. As mentioned on page 64 the use of the vacuum flush system for groups of dwellings or multiple dwelling units was considered to be outside the scope of this study.

6. The major economic disadvantage of the recycle toilets is the high cost of the chemical used for disinfecting the recycled flush water. Development of a suitable, lower cost disinfectant could make their use much more practical. There could be a problem with acceptance of reused flush water in the home, but this objection does not appear insurmountable.

7. Incinerator toilets are excessively costly to operate and maintain for family use. For certain applications, such as weekend cabins which are used sporadically, the incinerator may be the most economical system, but for normal continuous use, the incinerator toilet can not economically compete with conventional systems.

8. The analysis of the system to reuse wash waters for toilet flushing reveals several very significant facts. The treatment and the quality standards required for flushing water are minimal and the costs are thus relatively low in comparison with those for any other reuse. Yet this treatment and reuse is economical only in fair and poor soil areas.

9. The additional treatment of the non sanitary waste waters by distillation, reverse osmosis,carbon adsorption, or a multifilter system for use as laundry and bathing water as well as toilet flushing does not appear economically feasible.

10. The treatment of all waste waters by distillation and reuse for all purposes but drinking is also economically unattractive.

11. Aerobic treatment is competitive with anaerobic systems in poor soil areas. In such poor soil areas, some reuse may also be warranted.

12. Electrolytic treatment for disposal is not economical for most areas because of the low conductivity of the water.

Based on these observations from table IVA, the systems that warrant further discussion are the various means of restricting water usage, reuse of wash waters for toilet flushing, and the use of aerobic treatment systems in poor soil areas with the possibility of treating and reusing portions of the aerobic effluent.

ADDITIONAL ANALYSIS OF PROPOSED SYSTEMS

From the information available in the literature and the limited information supplied by the equipment manufacturers there is not enough actual data to perform an accurate and detailed examination for most of the proposed water reduction or waste treatment schemes. We have, however, developed criteria suitable for an actual detailed evaluation and have presented examples pertinent to this discussion.

Criteria For A Semi-Quantitative System Evaluation

Definite evaluation criteria were established to facilitate an objective comparison of the possible flow reduction and treatment schemes. The criteria chosen and their relative values are given in the following table. The reasons for this selection are then discussed.

	Criteria	Weighted Value (%)
1.	Initial Cost	20
2.	Operating Cost	20
3.	Reduction in Waste Volume	20
4.	Effluent Quality	10
5.	Operating Attention	10
6.	Aesthetics	10
7.	Safety	5
8.	Compatibility with home plumbing	5

All the evaluation criteria can be grouped under cost, utility, or household acceptability. These main groups are further broken down to make evaluation easier. Cost is represented by initial cost and operating cost; utility is represented by reduction in waste volume and effluent quality; household acceptability is represented by operating attention required, aesthetic factors, safety, and compatibility with home plumbing. Thus, of the total evaluation 40% is based on costs, 30% on utility, and 30% on household acceptability.

Cost, utility, and household acceptability are all essential for the success of a household waste treatment or volume reduction system, but cost was given the greatest weight because of its tendency to override the others. For example, excessive costs would readily cause a system of great utility and desirability to be rejected, while low costs could induce acceptance of systems with some undesirable features and of limited utility.

Under the heading of cost, initial cost and operating cost were given equal weight. Reduction of waste volume was considered of somewhat greater value than effluent quality because all cases produce some waste, requiring treatment either at the source or in a municipal system, and reduced volume allows greater efficiency in this treatment. Safety is the most important factor for household consideration, but we are assuming that all systems considered will provide adequate safeguards against disease or accidents. Thus, in this discussion safety is considered secondary to operating attention and aesthetic factors. Compatibility with present systems is also given a lesser value, since it is already a factor in the initial cost and is a lesser problem in new installation where such systems are most likely to be accepted.

1. Initial Cost - Initial cost is meant to include all expenses of installing and preparing a system of waste volume reduction or waste treatment for reuse. This initial cost will include the purchase cost of equipment required and installation costs, including the cost of alterations in the present system needed to allow the installation and use. Costs should not include items normally in the home. Items which are normally included in a household system but are not required with the proposed system should be counted as savings. The initial cost rating of systems will be determined as follows:

$$\text{Initial Cost Rating} = \frac{\text{Initial Cost of Present System}}{\text{Initial Cost of Proposed System}} \times 20$$

2. Operating Cost - Operating cost includes all direct material, power, and labor expenses incurred in the operation of the proposed system. Operating cost does not include a cost for the duties which would normally be performed by the homeowner; these are accounted for under the heading of "Operating Attention". Operating costs will include the cost of water used and the cost of disposing of any waste water.

$$\text{Operating Cost Rating} = \frac{\text{Present Operating Cost}}{\text{Operating Cost of Proposed System}} \times 20$$

3. Reduction in Waste Volume - Reduction in waste volume is very simply computed as the decrease in water requirements, since normally all water taken in (not including water for irrigation) is eventually discarded to the waste disposal system.

$$\text{Reduction in Waste Volume Rating} = \left(1.0 - \frac{\text{water used in proposed system}}{\text{water used in normal system}}\right) \times 20$$

4. Effluent Quality - The quality of the effluent which is discarded as waste from the system is very important in that it accounts for possible difficulties of transporting the waste to the final treatment center (including problems with corrosion, solids, viscosity, etc.), and the difficulty of treating this final waste at the treatment center.

   Definite values for these parameters are not readily available and will depend on the system and the type of final treatment proposed. Thus each system must be individually considered. For the examples presented the systems are given a subjective rating from 1 to 10 which is then discussed.

5. Operating Attention - Operating attention refers to the time that the home-owner must spend in the normal operation and maintenance of the system for reducing waste volumes or treating wastes. It does not include maintenance work that is normally hired through service firms or contractors. Such maintenance is included in operating cost.

$$\text{Rating for Operating Attention} = \frac{\text{Hours per yr with present system}}{\text{Hours per yr with proposed system}} \times 10$$

6. Aesthetics - Aesthetics refers to the personal reaction of household members to the use of the proposed technique for treating wastes or reducing the volume of waste water discharged. This also is a rather subjective and individually variable rating which will be discussed for each of the examples.

7. Safety - Safety is the term included as a measure of possible health hazards associated with the presence and use of the various devices for treating wastes or reducing the volume of wastes produced. All devices considered should be designed to eliminate unusual safety hazards, but the remote possibility of a disease or accident will of course exist. This rating will therefore be an evaluation of the risk involved. The rating of each process assigned will be individually discussed.

8. Compatibility With Present Designs - This term refers mainly to problems that may arise from changes required in the way homes and utilities are currently designed and built. It does not refer to simple rearrangements in plumbing fixtures since these are included as part of the initial cost for installation. It does refer to such things as changes in the requirements for power, sewage lines, and home or lot sizes. Each process will be given a subjective rating from 1 to 5.

Evaluation Examples

This section presents some brief examples (using the remaining waste reduction and treatment schemes) of the evaluation process and illustrates the kinds of problems that need to be considered. Also included are two comparative examples of a distillation process that had been previously eliminated because of high costs. In these examples, the water reduction or waste treatment device is compared with the device it would replace in the present household. Faucets with aerators are compared to faucets without aerators, shallow trap toilets are compared with the normal toilet, etc. In each case a schematic diagram is used to represent the water use in the household. Unless stated otherwise, the items in these examples are considered to be installed in older homes with municipal water and sewerage service. In homes with private waste disposal systems, the evaluation process would be unchanged, but the emphasis shifts from the waste volume to the treatability and the disposal of wastes. The evaluation emphasis might also have to be shifted in areas where water or sewage rates are very high.

Faucet Aerators - Faucet aerators are now very common and are manufactured as part of most faucet combinations because of the smooth even flow and the lack of splashing. Aeration helps remove objectionable tastes and odors, and the aerated stream of water is more efficient for rinsing than an unaerated stream. It should be noted, however, that the splashless characteristics considered desirable and convenient may actually result in the use of more water, even though the aerated stream itself is more efficient. This results from the tendency to use a higher flow rate and often to let the water run between rinsing operations when there is less splashing.

The use of aerators in the bathroom lavatory and the kitchen sink can save about two gallons of water each day. Probably half of this water is heated and an estimation of costs involved should include this fuel savings. It should also be specifically noted that these savings cannot be considered additional since they are already common in most homes.

Aerators increase the cost of faucets only slightly and they reduce operating costs and waste volume. Aerators do require some maintenance in the removal of mineral deposits which accumulate in some areas. There is no effect on effluent quality, safety or compatibility and the aerated stream is aesthetically more pleasing than the unaerated stream. Cost estimates are shown on figure 10.

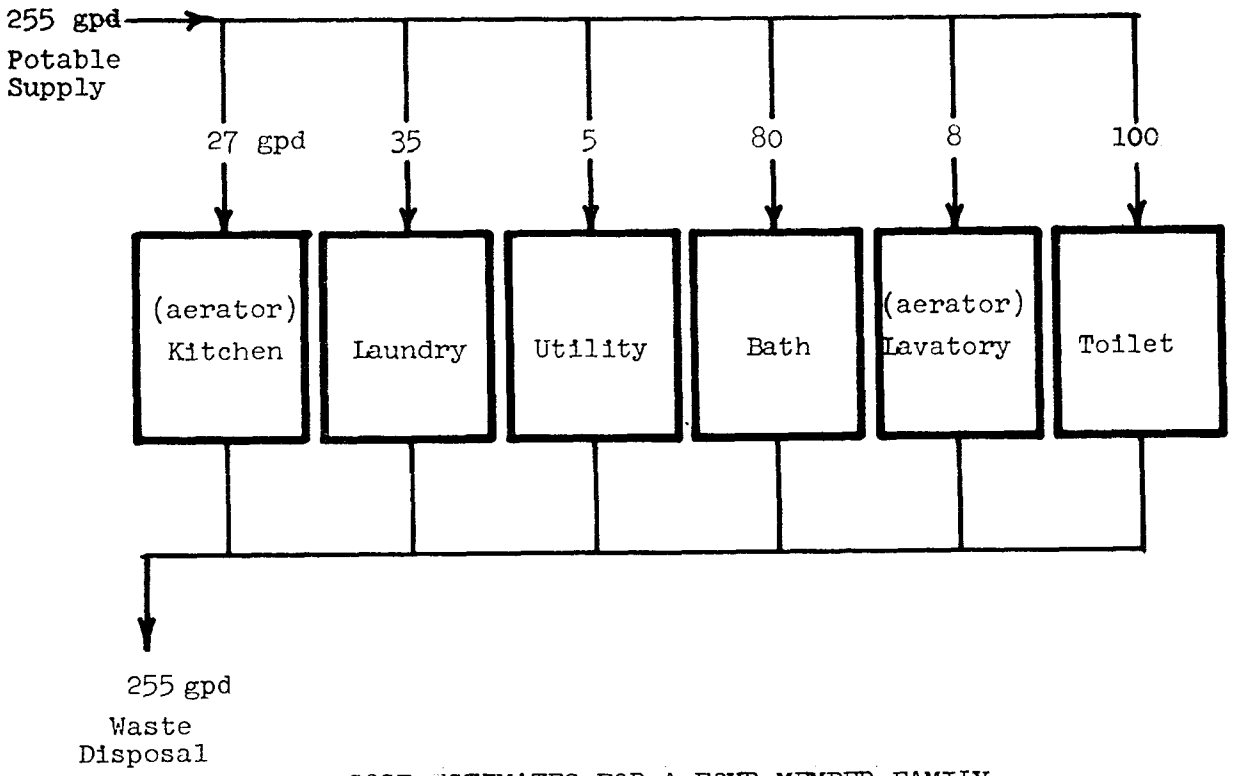

COST ESTIMATES FOR A FOUR MEMBER FAMILY

Material Cost 2 aerators $1.50	$3.00
Labor Cost 1/6 hr. (non professional)	0
Total Installation Cost	$3.00
Expected Life 15 yr.	
Cost Per Year	$ .20
Maintenance and Power Cost Per Year	0
Cost of Water Saved Per Year 2 gpd (365 day/yr) x $.42/1000 gal	.31
Cost of Power Saved Per Year (1/2) (2 gpd) (365 day/yr) x $.67/1000 gal	.24
Cost of Sewerage Saved Per Year 2 gpd (365 day/yr) x $.44/1000 gal	.32
Total Savings Per Year	$ .87
Net Savings Per Year $.87-$.20	$ .67

Figure 10. Household with Faucet Aerators

Rating for Aerators

Initial Cost	19.2
Operating Cost	21.2
Reduction in Waste Volume	1.1
Effluent Quality	10.0
Operating Attention	7.0
Aesthetics	10.0
Safety	5.0
Compatibility with Present Designs	5.0
Rating	78.5

Flow Control Shower Heads - Flow control shower heads are merely more economical replacements for the conventional type of shower heads. They can reduce the water consumption from the usual 5 to 15 gallons per minute to about 3 gallons per minute of showering. The total amount of water saved will depend on the water pressure of the system and the personal habits of the bather. Using the values for our "average" home where the present shower is assumed to deliver 5 gallons per minute and to last 3 to 5 minutes, the flow control shower heads will save 6 to 10 gallons of water per shower. If showering is the method of bathing sixty percent of the time, the water saved is approximately 2200 gallons per year for each person. At least three-fourths of the water saved would have been heated and the cost of heating the water is an additional savings. Assuming that fuel oil ($0.15 per gallon) is the source of heat this saving is approximately $0.67 per 1000 gallon and the total savings in water, sewage, and heating from flow control shower heads is thus about $3.00 per person or $12.00 per "average" family for each year.

Flow control shower heads are manufactured by several leading manufacturers and marketed at prices varying from $3.00 to $15.00. Installation varies from simply screwing a new showerhead in place of the old one to complete replacement of the piping back to the supply line. The first case can be easily handled by the home owner in 5 to 10 minutes while a plumber would probably charge $10.00 to $15.00 in the second case. Using the higher costs mentioned above, the total cost of converting to flow control shower heads would be $30.00, and the water and fuel savings in the "average" home would amortize the purchase and installation expenses in two and a half years. Thereafter the family would save twelve dollars per year. For new homes, the increase in cost over conventional devices would be much less than the cost of conversion in an older home, and savings would be correspondingly greater.

The flow control showerheads cost approximately 10% more than the conventional shower heads but cost less to operate (reduced water and heating costs) and demand no additional maintenance or operating attention. The quality of the shower effluent is unchanged except for a slight increase in contaminant concentration. The reduced volume fixture does provide a pleasant and adequate shower for cleansing. There may, however, be some aesthetic objection to the reduced flow rate because many people particularly enjoy a shower at full force (such a shower often consumes more water than a tub bath). Safety and compatibility are unchanged.

Rating for Flow Control Showers

Initial Cost	18.0
Operating Cost	26.7
Reduction in Waste Volume	5.0
Effluent Quality	10.0
Operating Attention	10.0
Aesthetics	8.0
Safety	5.0
Compatibility with Present Design	5.0
	87.7

Low Trap Water Closets - The conventional household water closet uses 4 to 6 gallons of water per flush and flushing water can amount to more than one third of an individual's daily water usage. The amount of water required for flushing is governed by aesthetic criteria for sufficient water to effectively remove the wastes from the toilet. Be redesigning the toilet bowl and the water trap various manufacturers are producing toilets which require only about 3-1/2 gallons for an adequate flush, thus saving an average of 1-1/2 gallons per flush or for the "average" individual, about 7-1/2 gallons per day, 2740 gallons per year. Again assuming the "average" rates this is equivalent to a savings of $2.35 per person per year or $9.40 for the "average" four member family.

The low trap toilets are no different than the normal toilets in operation or appearance and the only evaluation parameters that would change are initial cost, operating cost, and waste volume.

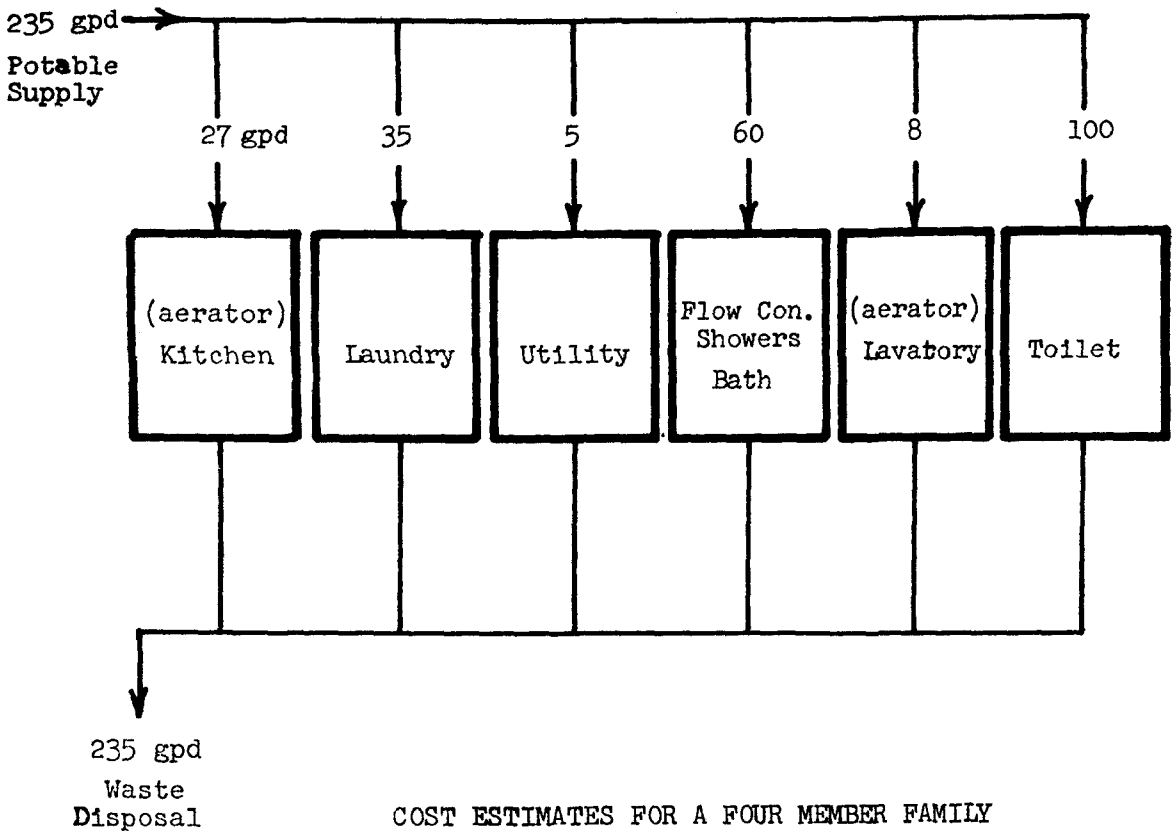

COST ESTIMATES FOR A FOUR MEMBER FAMILY

Material Cost flow control shower head $15.00	$15.00
Labor Cost 2 hr. $7.50/hr.	15.00
Total Installation Cost	$30.00
Expected Life 15 yr.	
Cost Per Year	2.00
Maintenance and Power Cost Per Year	0
Cost of Water Saved Per Year	3.70
Cost of Power Saved Per Year	4.40
Cost of Sewerage Saved Per Year	3.90
Total Savings Per Year	$12.00
Net Savings	$10.00 yr.

Figure 11. Household with Flow Control Showers

Rating for Low Trap Water Closets

Initial Cost	16.5
Operating Cost	28.6
Reduction in Waste Volume	6.0
Effluent Quality	10.0
Operating Attention	10.0
Aesthetics	10.0
Safety	5.0
Compatibility with Home Plumbing	5.0
Total	91.1

Automatic Flush Valve Water Closets - The automatic flush valve offers several advantages for conservation of water and for design changes in the bathroom. The flush valve operates directly from the water supply line and requires no tank. The absence of a tank could allow the utilization of additional space in the bathroom. Flush valve operation demands larger piping for the household, at least to the water closet, in order to supply water at a sufficient rate to start the flush siphon. Therefore, installation of flush valves would require replacement of existing piping in older homes and the use of larger piping for new homes in addition to the cost of purchasing and installing the valves.

The system offers the advantage of more controlled volumes of flush water. The flush mechanism can be set to deliver a volume of water sufficient for flushing and no more. Unlike the conventional flush mechanism, where additional water is lost as the tank refills, water flow stops when the flushing action is over. Also, with the tanks water often leaks continuously and unnoticed between flushes. If the automatic flush valve begins malfunctioning it is immediately apparent and repairs can be made. The flush valve offers a ready means of providing a dual flush, which would use less water to flush away liquid wastes. This could be accomplished simply by mounting two valves in a parallel circuit. The automatic flushing valves are also adaptable to and could be advantageously used with the shallow trap toilets.

Initial costs would be higher because of the flush valve cost and the larger size piping that would be required. Despite possible maintenance costs, the total operating cost would be lower because of the savings in water and sewerage. Initial cost and volume reduction vary with the use of single flush or dual flush systems. Effluent quality, operating attention, aesthetics, safety, and compatibility remain unchanged.

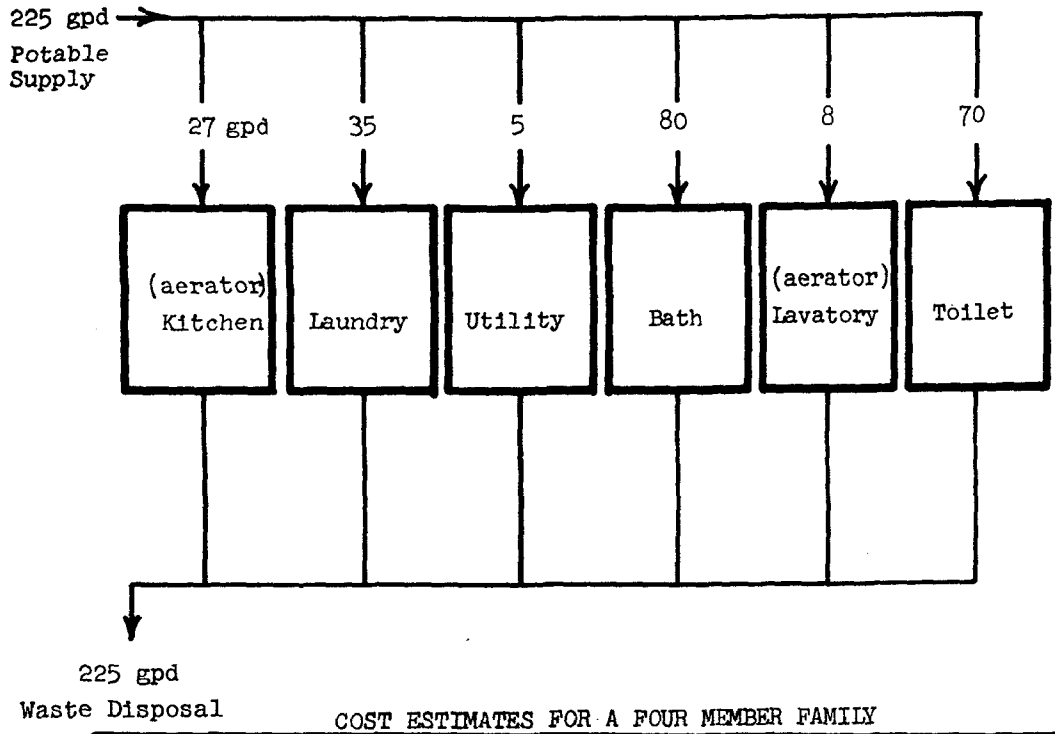

COST ESTIMATES FOR A FOUR MEMBER FAMILY

Material Cost (1 shallow trap water closet) $70.20	$ 70.20
Labor Cost 4 hrs. $7.50	30.00
Total Installation Cost	$100.20
Expected Life 20 years	
Cost Per Year	5.01
Maintenance and Power Cost Per Year	0
Cost of Water Saved Per Year	4.60
Cost of Power Saved Per Year	0
Cost of Sewerage Saved Per Year	4.80
Total Savings Per Year	$ 9.40
Net Savings	$ 4.39

Figure 12. Household with Shallow Trap Water Closets

Rating for Automatic Flush Valve Water Closets

	Single Flush	Dual Flush
Initial Cost	9.3	7.4
Operating Cost	27.6	33.9
Reduction of Waste Volume	6.0	9.2
Effluent Quality	10	10
Operating Attention	10	10
Aesthetics	10	10
Safety	5	5
Compatibility with Home Plumbing	5	5
	82.9	90.5

Reuse of Wash Water for Toilet Flushing - The reuse of wash waters for flushing toilets is a scheme in which the water from the laundry and from bathing is collected and used as the flushing liquid in the water closet, thus saving the amount of water normally used for toilet flushing. This use of waste wash waters for toilet flushing is one of the simplest and least expensive methods of conserving water through reuse. The water for reuse for flushing toilets does not require high standards, because it is not to be ingested or to come in contact with the body. It does not have to be heated, and therefore requirements of a heating system need not be considered. The detergents from laundry operations should make the water safer from a health viewpoint since many detergents are bactericidal. Also, the bad taste of soaps and detergents should discourage small children who might accidentally ingest the water. The main treatment problem is to make the water aesthetically acceptable to the average housewife.

Possible aesthetic parameters for rejection would be foaming, suspended solids, odor, and color. Suspended solids can be removed by filtration; if odor, foaming, and color are problems, the causative agents could be removed by activated carbon. In the experimental unit used by McLaughlin (55), odor, color, and foaming were no problem and suspended solids were removed by filtration through a swimming pool (cartridge type) filter.

The physical requirements of the system are collection of the waste waters, storage of this water until usage, and a means of supplying the water to the water closet for use. To collect the water, existing drains must be rerouted or replaced,

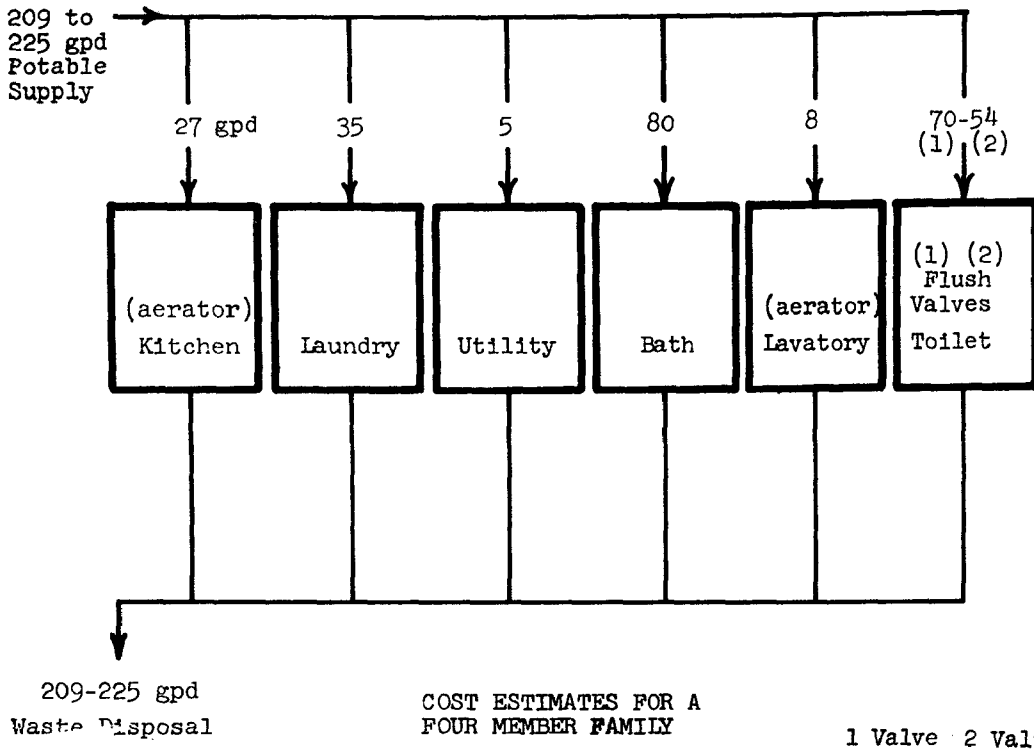

COST ESTIMATES FOR A FOUR MEMBER FAMILY

	1 Valve	2 Valves
Material Cost 1 or 2 flush valves $40, piping $20	$60.00	$100.00
Labor Cost 5-6 hr. $7.50/hr.	37.50	45.00
Total Installation Cost	$97.50	$145.00
Expected Life 15 yr.		
Cost Per Year	$ 6.50	$ 9.65
Maintenance and Power Cost Per Year	.75	1.50
Cost of Water Saved Per Year	4.60	7.05
Cost of Power Saved Per Year	0	0
Cost of Sewerage Saved Per Year	4.80	7.40
Total Savings Per Year	$ 9.40	$ 14.45
Net Savings	$ 2.15	$ 3.30

Figure 13. Households with Automatic Flush Valves for Water Closets

and a tank provided for storage. A filter is required to protect the flushing system and the pump used to lift the water to the water closet from abrasive solids. Also, a pressure tank is required to supply pressurized water to the water closet. The pressure tank could possibly be eliminated by slight modifications of the pump and water closet.

Initial cost, operating cost, and operating attention will increase with this system, while waste volume will be substantially decreased. Effluent quality and safety will not change appreciably, but aesthetic and compatibility factors will depend on the particular circumstances.

Initial Cost	4.2
Operating Cost	17.4
Reduction in Waste Volume	20.0
Effluent Quality	10.0
Operating Attention	9.5
Aesthetics	9.5
Safety	5
Compatibility with Home Plumbing	4.5
	80.1

Aerobic Treatment of Wastes - Several manufacturers of aerobic treatment systems offer maintenance contracts with their treatment units so that no more homeowner attention is required than for a septic tank. This service costs additional money, but helps make the aerobic devices more acceptable to the health authorities who recognize both the need for periodic maintenance and service and the tendency of most home owners to neglect maintenance and service so long as possible. The treatment system of many of the companies contacted is designed to be buried out of sight like the septic tank with a similar soil absorption system for disposal of the treated effluent. Many of the companies claim that the effluent from their treatment plant is suitable for disposal to storm sewers or small water courses. However, many health officials do not currently permit such disposal, and we have assumed the necessity of using a soil absorption system in this analysis. The advantages of the aerobic treatment are the greater absorption capacities that most soils exhibit toward aerobic over septic effluents. Thus the absorption field can be made smaller or assumed to last a longer period of time. In this example an absorption field 1/3 the size required for a septic tank effluent (87) is assumed to be adequate.

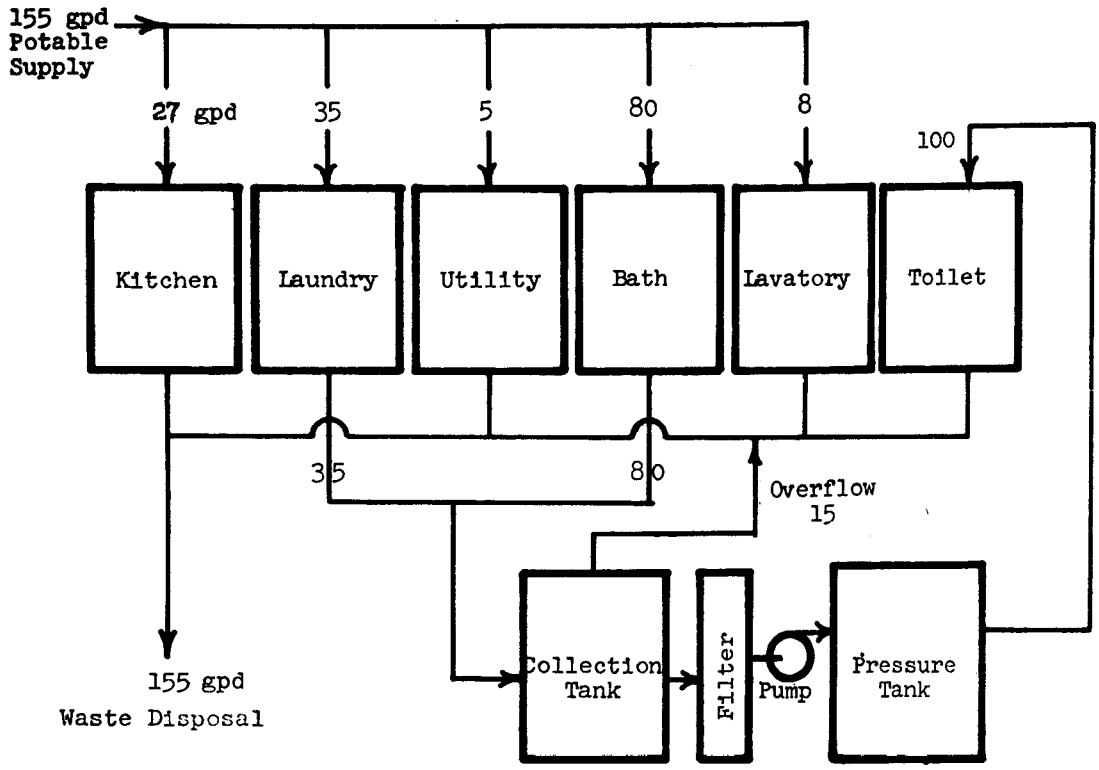

COST ESTIMATES FOR A FOUR MEMBER FAMILY

Material Cost tanks and piping $95, pump & filter $140	$235.00
Labor Cost 12 hrs $7.50/hr.	90.00
Total Installation Cost	$325.00
Expected Life 10 yr. (main components)	
Cost Per Year	32.50
Maintenance and Power Cost Per Year	3.65
Cost of Water Saved Per Year	16.10
Cost of Power Saved Per Year	
Cost of Sewerage Saved Per Year	15.30
Total Savings Per Year	31.40
Net Savings	-$ 4.75

Figure 14. Households with Reuse of Washwater for Toilet Flushing

In poor soils, the initial cost of the aerobic system may be substantially less than an anaerobic system. The aerobic system requires power roughly equivalent to a home freezer. There is no reduction of volume but the effluent is of high quality. Assuming the use of a manufacturers service contract, operating attention increases only slightly. Aesthetically, an aerobic plant is more operationally acceptable than a septic tank, but the greater accessibility required for maintenance may make the aerobic system more offensive to some home owners. Safety and compatibility are relatively unchanged.

(Note that the aerobic system is compared to a septic tank in poor soil where the size of the absorption field for aerobic effluent is assumed to be 1/3 that required for a septic effluent)

Initial Cost	27.7
Operating Cost	4.8
Reduction in Waste Volume	0.0
Effluent Quality	15.0
Operating Attention	9.5
Aesthetics	4.5
Safety	5.0
Compatibility with Home Plumbing	5.0
	71.5

Distillation of Wastes with Reuse for all but Drinking and Cooking - Although this treatment scheme has already been eliminated by the preliminary cost analysis, it is presented again as a comparative example of one of the more complicated treatment schemes.

Available distillation devices cannot handle solid materials effectively without excessive scaling. The most inexpensive method of removing and treating the solids would be by sedimentation and filtration. These could be supplied by a septic tank and a commercially available pressurized sand filter. This clarified liquid would then be fed to the distillation apparatus. For simplicity it was assumed that the use of a vapor compression device such as the Hickman still would be used and that the significant operating problems had been solved. Also, it was assumed that 85% of the feed water will be recoverable in the distillation process without significantly increasing operating costs.

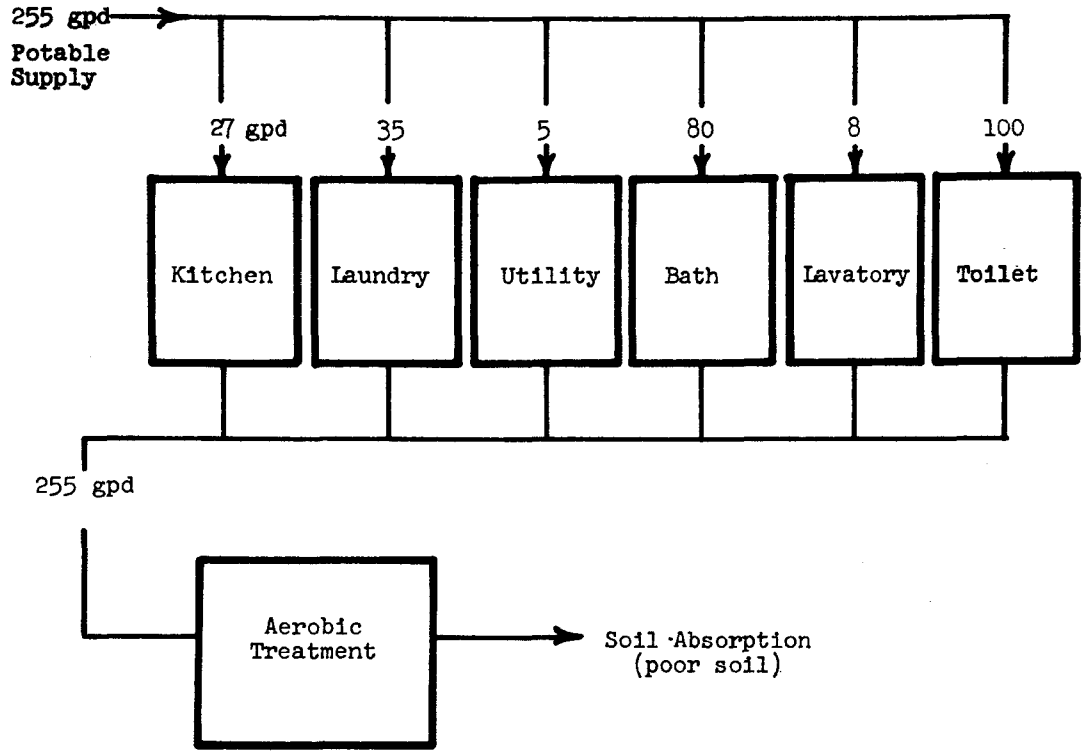

COST ESTIMATES FOR A FOUR MEMBER FAMILY

Material Cost aerobic plant $1200, soil absorption system $800	$2000
Labor Cost included above	
Total Installation Cost	$2000
Expected Life 20 yr.	
Cost Per Year	$ 100
Maintenance and Power Cost Per Year	51
Cost of Water Saved Per Year	
Cost of Power Saved Per Yea	
Cost of Sewerage Saved Per Year (Cost of Septic Tank System in Poor Soil)	152
Total Savings Per Year	
Net Savings	1

Figure 15. Aerobic Treatment in Place of Septic Tank in Poor Soil Areas

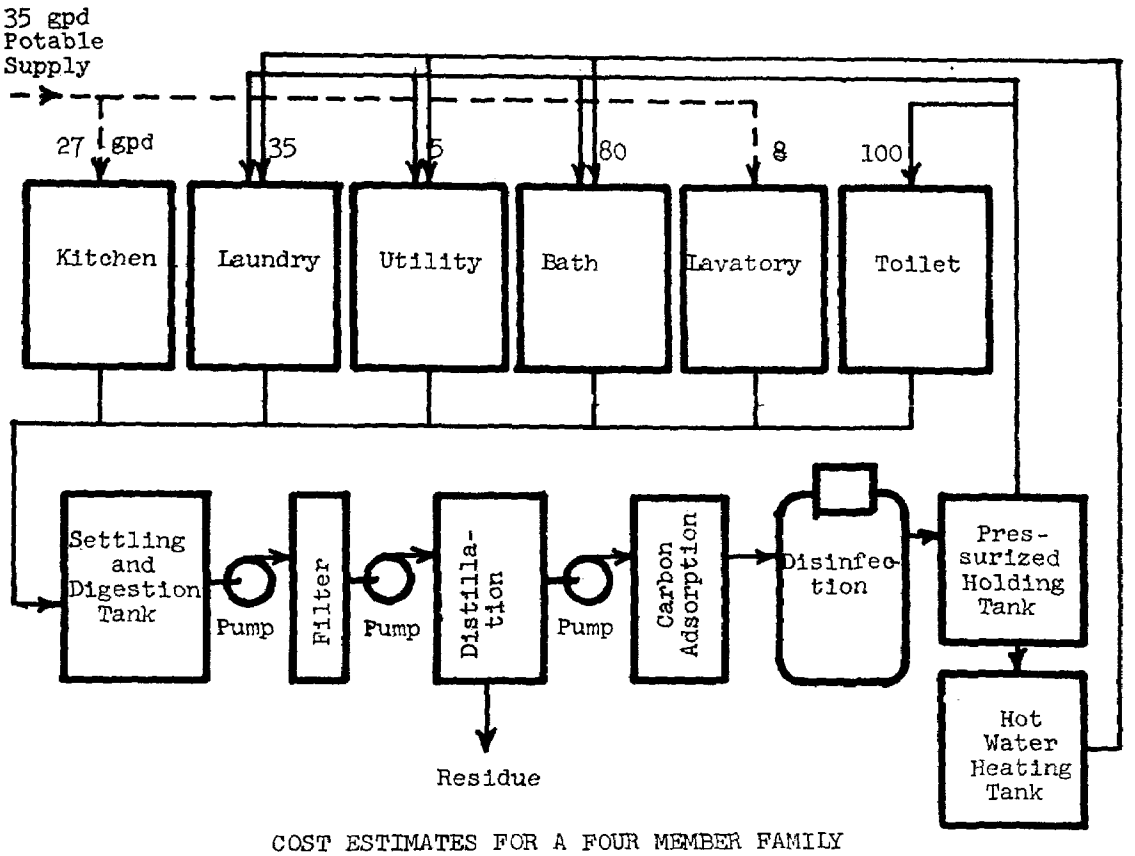

COST ESTIMATES FOR A FOUR MEMBER FAMILY

Material Cost pumps & pressure tanks $290, pretreatment $520, distillation unit $1500, final treatment $250	$2560.00
Labor Cost	200.00
Total Installation Cost	$2760.00
Expected Life 15 yr.	
Cost Per Year	184.00
Maintenance and Power Cost Per Year pumping $22, pretreatment $12, distillation $160, final treatment $30	224.00
Cost of Water Saved Per Year	34.00
Cost of Power Saved Per Year	0
Cost of Sewerage Saved Per Year	114.00
Total Savings Per Year	148.00
Net Savings	-$ 260.00

Figure 16. Distillation and Reuse: All Water in Poor Soil Areas

The low temperature operation of this still would prevent the volatilization of many organic materials but the product water would still require disinfection and carbon adsorption treatment to make the effluent acceptable for health and aesthetic standards.

The initial cost and the operating costs of such a system are much higher than under present systems and the cost savings in water and sewerage are small in comparison with the costs. The parameters of operating attention, aesthetics, safety and household acceptability would also be adversely affected. The additional equipment requires additional homeowner surveilance and maintenance. Under normal conditions, the safety of the water should be insured by the multiple steps of filtration, distillation, adsorption and disinfection but the chance of malfunction exists, and the knowledge of possible malfunction would cause some aesthetic reaction in addition to the normal dislike for directly reusing waste water. There would be no major design problems with such a system, but just the bulk of the equipment could cause some concern.

Rating for Distillation and Reuse of All Wastes

Initial Cost	0.5
Operating Cost	8.2
Reduction in Waste Volume	17.3
Effluent Quality	10.0
Operating Attention	3.3
Aesthetics	8
Safety	3
Compatibility with Home Plumbing	4.5
Total	54.8

According to the ratings just presented, the order of desirability of the waste reduction and treatment schemes is shown below followed by a similar ordering as to net savings per "average family" per year.

Order of Rating	Rating
1. Shallow Trap Toilets	91.1
2. 2 flush valves with toilet	90.5

Order of Rating (Cont'd)	Rating
3. Flow control showers	87.7
4. 1 flush valve with toilet	82.9
5. Reuse of wash waters for toilet flushing	80.1
6. Aerators	78.5
7. Aerobic treatment (poor soil areas)	71.5
8. Distillation and reuse of all wastes	54.8

Order of Net Yearly Savings ($)	
1. Flow control showers	$ 10.00
2. Shallow trap toilets	4.39
3. 2 flush valves with toilet	3.30
4. 1 flush valve with toilet	2.15
5. Aerators	0.67
6. Reuse of wash waters for toilet flushing	-4.75
7. Aerobic treatment	1.00 (in poor soils)
8. Distillation and reuse of all wastes	-260.00 (in poor soils)

When the rating order and the savings order are combined, the listing of the processes in order of practicality becomes:

1. Shallow trap toilets
2. Flow control showers
3. 2 flush valves with toilet
4. 1 flush valve with toilet
5. Aerators
6. Reuse of wash waters for toilet flushing
7. Aerobic treatment
8. Distillation and reuse of all wastes

Figures 17 and 18 show the probable costs and savings that would correspond to two of the possible combinations of these devices. Each actual application would be a different and individual problem which could be solved in the manner outlined at the beginning of this section.

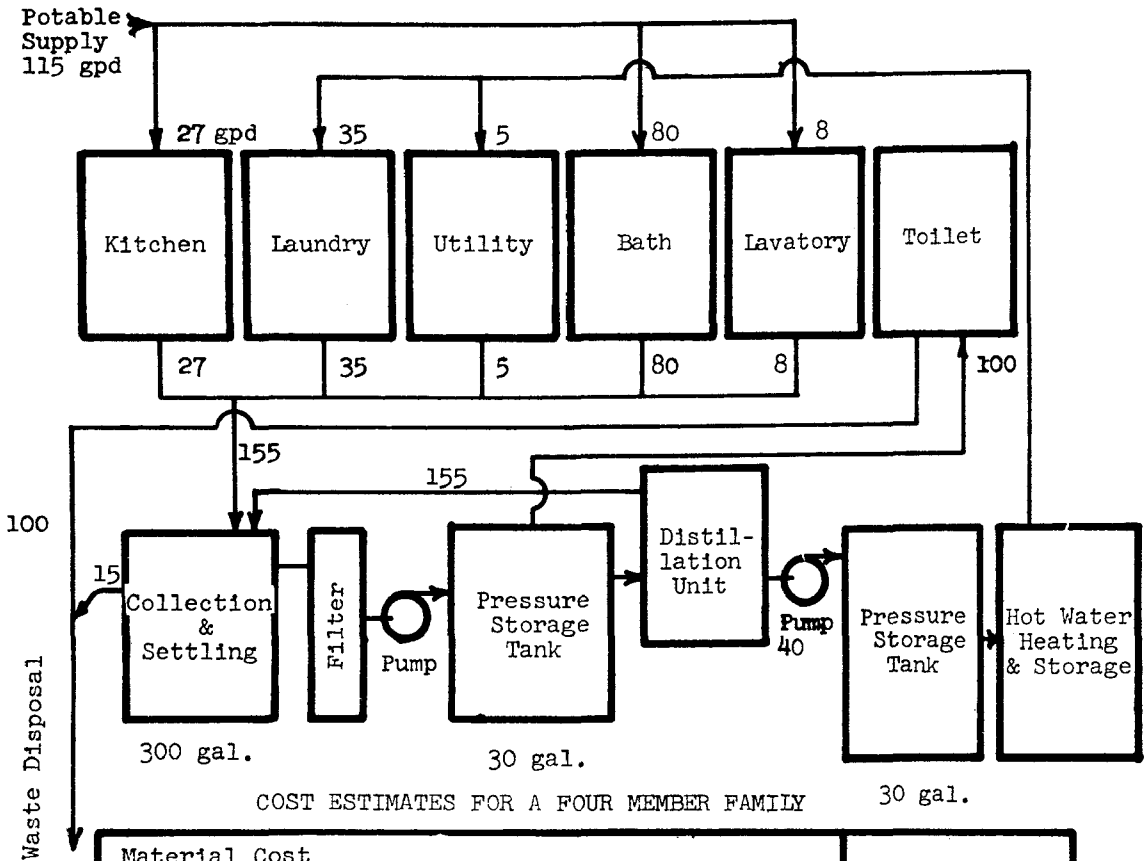

COST ESTIMATES FOR A FOUR MEMBER FAMILY

Material Cost pumps & pressure tanks ($250), pretreatment $270, distillation $1000	$1520
Labor Cost	200
Total Installation Cost	1720
Expected Life 15 yr.	
Cost Per Year	114
Maintenance and Power Cost Per Year	34
Cost of Water Saved Per Year	22
Cost of Power Saved Per Year	
Cost of Sewerage Saved Per Year	23
Total Savings Per Year	45
Net Savings	-$103

Figure 17. Reuse of Non-Sanitary Wastes for Toilet Flushing After Filtration, and for Laundry After Distillation

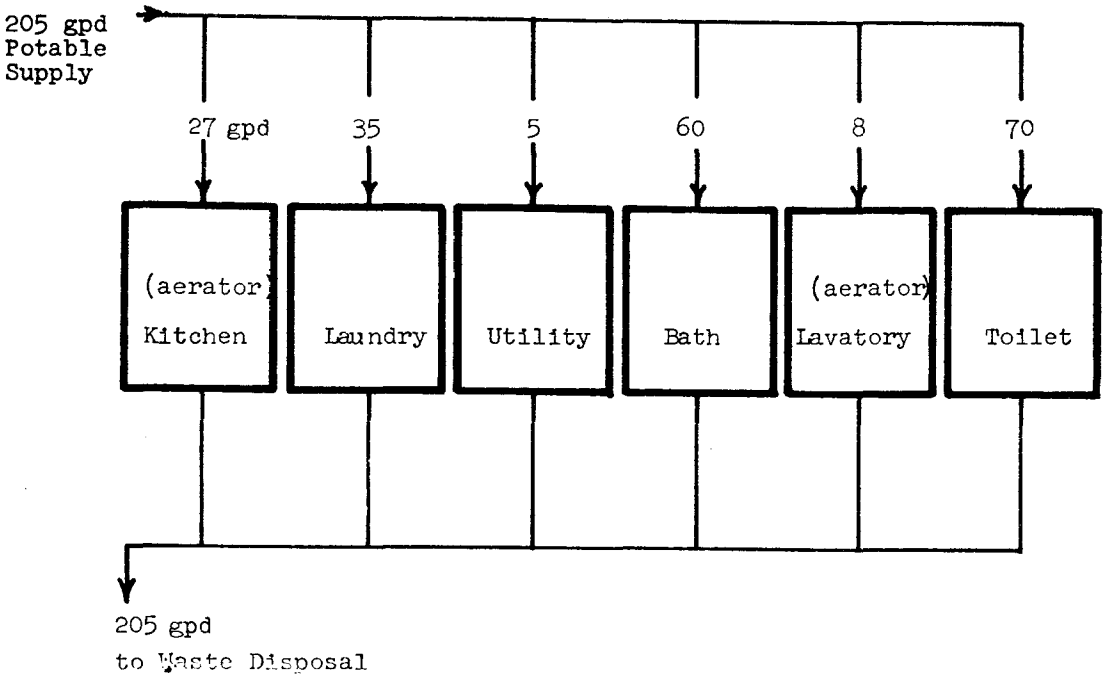

COST ESTIMATES FOR A FOUR MEMBER FAMILY

Material Cost 1 shallow trap W.C. $70.20, 1 flow control shower $15, 2 aerators at $1.50	$ 88.20
Labor Cost 6 hr. $7.50/hr.	$ 45.00
Total Installation Cost	133.20
Expected Life	
Cost Per Year	6.45
Maintenance and Power Cost Per Year	0
Cost of Water Saved Per Year	8.10
Cost of Power Saved Per Year	4.37
Cost of Sewerage Saved Per Year	8.62
Total Savings Per Year	$ 21.09
Net Savings	$14.64

Figure 18. Use of Flow Control Showers, Shallow Trap Toilets, and Aerators

VII

SURVEY RESULTS

A postal survey of homeowners, architect-engineers, plumbers, and plumbing equipment manufacturers was conducted to obtain representative reactions from the people who would control the actual use of any schemes for reducing water usage or improving waste treatment and to ensure that the opinions formed from the literature survey were not contrary to popular practice or beliefs. The questionnaires were prepared and distributed throughout the country so that any peculiarities or radical differences in the replies caused by climatic or cultural variations in different areas of the country could be recognized.

The response to the survey was relatively good as 387 homeowners, 40 plumbers, 29 architect-engineers, and 8 plumbing equipment manufacturers, representing 50% of the equipment manufacturers contacted, 52% of the homeowners, 21% of the architect-engineers, and 18% of the plumbers, filled out and returned the questionnaires. The higher return from the equipment manufacturers and homeowners was probably due to the fact that many from these groups were personally contacted by phone or in person by personnel from the different General Dynamics divisions around the country. Many of the survey participants submitted additional suggestions and comments on the environmental pollution problem in general and on particular points in the different questionnaires. In addition, slightly more than half of the cooperating homeowners asked to receive a summary of the survey results and conclusions.

The responses received showed no major differences in the opinions of the people; from the various sections of the country; nor did the responses differ significantly with the cost of the homes. Comparison of the answers from homeowners with sewer connections with the answers and comments from homeowners with individual waste disposal systems also revealed no significant differences.

The questionnaire distribution schedule and samples of the questionnaires with the tabulated results of the survey are included in the appendix (tables VA through IXA). The pertinent results related to the use of the water reduction devices and techniques are shown in table XIV, and the following section presents a brief discussion of all the survey results.

WATER SAVING FAUCETS AND SHOWERHEADS

As shown by table XIV, all of the groups surveyed were favorable toward the use of the flow restricting faucets and showerheads. Most of the objections to these devices seemed to stem from aesthetic rather than functional or economic considerations.

Table XIV. Summary Of Survey Results

Water Saving Device or Technique	Percent of Responses Which Indicate Acceptance for the Use of These Techniques or Devices			
	Homeowners	Plumbers	Architect-Engineers	Equipment Manufacturers
Water Saving Faucets or Shower Heads	87	87	90	75
Direct Flush Toilet Valves	92	49	79	72
Toilets with Separate Flush Cycles for Urine and Feces	79	56	90	43
Home Urinals	37	24	77	43
Toilets that Disinfect and Reuse Flush Water	46	21	68	
The Reuse of Wash Waters				
a. For Toilet Flushing	82		86	
b. For Lawn Irrigation	82		86	

Some seemed to fear that showering enjoyment would be curtailed by the reduced flow. One of the architects surveyed was opposed because he thought the flow reduction was to be achieved through spring loaded, rather than flow restricting valves.

The equipment manufacturers and plumbers predicted that the flow reduction devices would be 10% to 30% more expensive to purchase and possibly somewhat more costly to install, although no particular installation problems were foreseen.

DIRECT FLUSH TOILET VALVES

Direct flush toilet valves received the highest percentage (92%) of homeowner approval of all the water saving devices. However, architect-engineers, plumbers, and plumbing equipment manufacturers gave the direct flush valves a lower rating.

Noise and the requirements for higher water pressure or larger pipe sizes were the main objections. Although many plumbers mentioned noise, only two of the 387 homeowners mentioned noise as a problem. The pressure or pipe size requirement can be alleviated rather simply by increasing the pipe size. To some plumbers and homeowners, the direct flush valves were considered to be preferable to the tank type because of their dependability and waste flow reduction.

Toilets with Separate Flush Cycles for Urine and Feces

Toilets with separate flush cycles for urine and feces are a relatively new concept in this country and its unfamiliarity was probably the cause for the lower percentages favoring their use. Comments from plumbing equipment manufacturers indicated that the major problems anticipated are more costly installation and maintenance requirements. Also, they suggested that if it is difficult to change cycles, the cycle using the most water will be used exclusively. One of the plumbers objected because he felt that the reduced flush for urine would not properly cleanse the toilet bowl. Homeowners also seemed to fear that a dual flush system would be difficult to use and expensive to maintain. However, judging from some of the European designs and their public acceptance, most of these objections appear unfounded and most objections could be apparently removed by simple demonstrations and explanations.

HOME URINALS

Home urinals were considered objectionable by 63% of the homeowners, 23% of the architect-engineers, 57% of the equipment manufacturers, and 76% of the plumbers. The major objections stated were the extra cost and bathroom space required for the urinal; however, the study by Kira (45) indicated that the major objections against the use of urinals are actually psychological in origin and as a result household acceptance will probably not be readily induced by practical and economic considerations. The feasibility of this explanation is somewhat strengthened by the greater homeowner approval of recycle toilets which are sanitarily, aesthetically, economically, and operationally less acceptable than the urinal.

RECYCLE TOILETS

Most survey participants objected to the household use of recycle toilets. The major objections were the initial expense and the fear that unsanitary conditions would develop. Handling the wastes when the holding tank is filled could be avoided by connecting the discharge directly to the sewer, but the problem of higher initial and operating costs would remain, as would the possibility of odor if the device is not properly maintained.

REUSE OF WASTE WASH WATERS

The reuse of waste wash waters appears to be generally acceptable to architect-engineers and homeowners, although many questioned the degree of treatment to be given the waste waters and some named specific limits to what they would accept. For example, the water for toilet flushing must not appear dirty, be odorous, or stain the toilet bowl and require more frequent cleaning; for irrigation water many mentioned the necessity of removing soaps, bleaches, and other substances potentially harmful to plants. One of the architect-engineers stated that he had already designed wash water reuse systems for water short areas, and several others mentioned that they had designed systems using municipal aerobic treatment effluent.

INDIVIDUAL TREATMENT SYSTEMS

Of the 149 homeowners with individual treatment systems, 90% used a septic tank and soil absorption system and 10% used a cesspool soil absorption system. In most of the treatment systems (68%) the laundry and bathing waters are treated in the same system as the sanitary wastes as suggested by the "Manual of Septic Tank Practice" (90).

It was surprising to note that although 67% of the maintenance schedules reported by the homeowners were inadequate according to recommendations in the Public Health Service manual, only 40% experienced any recent need for service or repair and 60% of those requiring service needed only routine removal of accumulated solids. Generally, the homeowners and the architects seemed satisfied with the operation of the septic tank soil absorption system. Apparently, this acceptance of the septic tank system is based on satisfactory performance rather than merely low costs, as the average costs reportedly allocated for individual sewage treatment by the architect-engineers and which the homeowners indicated they would be willing to pay were not low enough to encourage the use of unworkable systems. Only 40% of the homeowners indicated desire for a more effective system and only 50% felt that even a trouble-free system was worth more money. Many felt their present system was already trouble-free.

Aerobic treatment systems were not used by any of the 387 homeowners responding and only 17% of the architect-engineers had found it necessary or convenient to even consider aerobic treatment rather than a septic tank. One architect said he had installed several units which operated quite successfully, although the initial costs were high.

VIII

CONCLUSIONS AND RECOMMENDATIONS

This report presents a useful composite of available waste treatment information for individual households and introduces an area of household water and waste management (waste prevention) which has previously received little attention in this country. The conclusions of the study are presented below and then discussed along with appropriate recommendations for additional activities.

CONCLUSIONS

Household Water Use

1. Quality requirements for specific household tasks can be safely lowered.

   Many household tasks do not require water of drinking quality. Many of the established standards are related to taste or odor, and water of lower quality could be used for practically all purposes except those associated with drinking or food preparation. Standards are suggested for bathing, general cleaning, and toilet flushing. The practicality of using differing water qualities for various tasks depends on the availability and cost of the alternate water systems.

2. Household water usage can be significantly reduced.

   There are many household functions in which water is used wastefully. Water for bathing, toilet flushing, and laundry could be economically reduced approximately 35% by use of presently available devices and technology. In a city of 100,000 these savings could amount to more than two million gallons of water per day that would not have to be supplied to the users and eventually treated in the waste treatment plant.

   The reduction in household water use is an attractive and practical way of aiding the fight against water and waste problems. Waste prevention is one method of pollution control that will not become obsolete as new treatment technology is developed. No matter what the method of treatment either for large installations or for individual homes, handling and treatment of the waste will be more efficient and less expensive when it is concentrated in a smaller volume. For example, septic tank treatment efficiency depends on the residence time of the sewage in the septic tank, a factor inversely proportional to the waste flow to the system. The soil absorption system will also perform more efficiently since the septic tank effluent will have been more completely settled and treated, and the soil will have a greater

opportunity to rest and regain infiltrative capacity because of the reduced flow. Reduced flow would also enhance the performance of aerobic treatment units by allowing longer periods for oxidation in the aeration chamber and more efficient settling in the settling compartment.

Some manufacturers have anticipated the demand for plumbing devices that use less water. Valves which restrict flow for faucets and showers, toilets which use reduced flushing volumes, and washing machines which allow just the required amount of water to be used are already available. A new toilet with flushing quantities similar to the United Kingdom toilets has just been introduced (House and Home, April, 1969). Other innovations such as the dual flush cycle toilet will probably be introduced in this country in the near future.

3. A limited public opinion survey showed little opposition to the use of flow reducing devices.

The survey of the homeowners, plumbers, architect-engineers, and equipment manufacturers substantiated most of the opinions formed during the study and indicated ready acceptance for all the water reduction devices except the home urinal and the recycle toilets. The relatively good response to the survey showed that public interest in protecting and preserving the environment is high. Most of the survey participants seemed to favor the concept of flow reduction devices but were somewhat hesitant to accept them in their own homes. Many of the architect-engineers and plumbers seemed interested, but skeptical, and said they lacked data on most of the devices.

In addition to the indication of which water reduction devices and techniques would be most acceptable in the home, the survey showed the interest most people have in reducing environmental pollution. An increasing number of people are aware of the environmental pollution problems and of the economic and aesthetic effects that these problems have on their own lives. In a national public opinion survey for the National Wildlife Federation, George H. Gallup, Jr. reported that three of four Americans from all income groups are willing to pay more taxes to improve their natural environment (Air/Water Pollution Report, p. 72, March 3, 1969). In the Niagara peninsula of Ontario, interested citizens have organized The Committee of a Thousand, a group of dues-paying citizens who are personally involved in the effort to discover and terminate all sources of pollution in their area (Watertalk, 1969).

Household Treatment and Possible Reuse

1. There is no simple solution to the problem of waste treatment for individual households.

   Individual household waste treatment will continue to be a problem in the foreseeable future. Individual treatment units are being installed at a

decreasing rate, but the numbers being installed and the number already in use are very large. Household aerobic treatment units are presently the only available alternative to the septic tank system and are practically competitive with the septic tank only in areas of poor soil. Surface disposal of aerobic effluents, which would help reduce aerobic treatment costs, cannot be recommended without the provision of adequate safeguards to ensure an effluent that will not endanger health or degrade the surrounding environment. Requirements for nutrient removal from effluents could further increase the cost of disposing effluents to surface drainage.

The problem of individual household treatment will be of great importance for many years and the development of a more efficient, more economical system would be very profitable. The increasing population densities and the greater demands for high quality recreational waters are making operation of inadequate individual treatment units more noticeable and objectionable.

Besides the need for better treatment, there is a need for better maintenance of equipment and better understanding of the treatment process by the homeowners. Many homeowners would give their treatment system proper care if they had a better understanding of its operation. Information is available from many government agencies, but builders, septic tank installers, and possibly even an agency such as the Welcome Wagon could help to make sure all homeowners with individual treatment systems had the necessary information.

2. Advanced waste treatment schemes other than simple filtration and disinfection are generally not practical for a normal household.

   Most households could not meet the operating expenses or provide the operating attention required by the majority of the advanced treatment systems. Even when an extensively treated water is reused for all purposes but drinking, the costs are prohibitive. The only economical and practical reuse is the filtration and reuse of wash waters for toilet flushing, and in areas where aerobic treatment is economical, the filtration and reuse of the aerobic effluent for toilet flushing. Where possible, the reuse of wash waters is preferable to the reuse of effluent from a septic tank or an aerobic treatment unit. With wash waters the treatment is much simpler and the danger of disease infection is more easily avoided.

   While advanced waste treatment schemes do not seem generally practical for individual home usage under the restrictions of present technology, progress may depend on a single development which could occur at any time. One of the advanced treatment techniques (oxidation by activated oxygen produced through gamma radiation) which was considered unsuitable for

household use earlier in this study has reportedly been developed as a household treatment process (Chemical and Engineering News, p. 61, April 21, 1969). A chemical treatment process, reportedly applicable for households, is being tested at Washington State University. Changes in treatment requirements and developments in other areas such as in automatic controls could make other treatment systems acceptable in the household.

Similarly, developments which could make the advanced treatment processes suitable for household use would make reuse schemes possible.

RECOMMENDATIONS FOR ADDITIONAL ACTIVITIES

Household Water Use

1. Studies on water quality and contaminant detection should be continued.

   Although household water systems utilizing different levels of water quality for different uses do not appear generally practical for the common household, more work should be sponsored in the area of water standards and their measurement. The presence of many new chemicals which are difficult to treat or remove and which may be dangerous in very small concentrations is increasing the need for higher standards of water quality control. The present level of waste recycling in many of the river systems as well as a growing number of intentional reuses will intensify this need in the near future. More knowledge is needed on the effect of many chemicals and the means of detecting and removing those chemicals which may be found harmful.

2. Flow reduction concepts should be more extensively promoted and publicized.

   Many persons contacted in the public opinion survey, including many plumbers and architect engineers, had not heard of the various flow reduction devices and had received no information on them. Manufacturers should provide the architect-engineers and plumbers with factual information on the design, operation, and cost of these items as well as data on the potential savings available to customers and to society in the form of better water and waste management. It would also be advantageous for the manufacturers to directly contact large businesses, industries, and public institutions where many water and waste systems are often concentrated in one or two locations and where additional per unit savings are possible in material and labor costs.

   An impartial demonstration of the use and water saving capabilities of these water reduction devices would also be very beneficial in securing public support and in providing data which could be used for design purposes as these devices become more common. At first, it might seem that such a study would be redundant in that equipment manufacturers probably already

have extensive data on the operation of the particular device which they market. However, household usage does not always correspond to the manufacturers' criteria; nor do homeowners always use equipment exactly as directed. The proposed evaluation should not only reveal possible difficulties, but more importantly, provide data for typical costs (installation, maintenance, repair, etc.) and typical savings in water and fuel that could be expected in a normal home. Such information would be very useful to architect-engineers, plumbers, homeowners, and the equipment manufacturers themselves. It would also provide the data for an analysis of any conflicts with local plumbing codes and where necessary should provide adequate data for changes in antiquated legislation.

In the first phase of the recommended study, a representative group of families should be chosen for the tests and their present water using system thoroughly surveyed as to the frequency of usage and the amount of water used in each of the household functions. For the second phase of the study the flow reducing devices would be installed and the same data would be recorded. In addition, the reactions of the families to the use of these devices would be carefully examined.

3. The use of community schemes for more efficient water and waste handling should be further investigated.

   Waste collection and water distribution systems must be studied on a community, rather than an individual, basis. Two potentially lower cost waste collection systems have been proposed; both systems, a pressure system and a vacuum system, allow smaller diameter waste lines and eliminate the need for the excessively deep trenches required with gravity sewers. In the pressure system, the sewage is ground and pumped through a check valve from each household into small diameter pressurized sewer lines. In the vacuum system wastes are transported from specially designed water closets by a central vacuum system. This system has the added advantage of using only a tenth as much flushing water. Each system requires special equipment in the household and each would therefore require some additional maintenance. Potentially these schemes could substantially reduce the cost of sewer lines and, for the vacuum system, reduce water requirements; but more information is needed before either of these systems or a combination of the two can be recommended. Consideration must also be given to the effect such changes would have on the water system, the waste treatment system, and on other utilities such as power.

Household Treatment and Reuse

1. Additional studies should be conducted to clarify the effect of a higher quality sewage effluent on a soil absorption system.

Previous studies have not clearly substantiated claims for a greater soil absorption capacity with aerobic effluents. Further information is needed to permit effective regulation of the soil absorption systems for aerobic treatment.

2. Criteria for the design, construction, operation, and effluent quality of household treatment systems must be developed before the surface discharge of treated effluents can be permitted.

   Individual household treatment systems are administered primarily by local officials who often do not have the background to adequately check individual household systems without the aid of such detailed criteria. The criteria developed should be general enough to apply throughout the country and to all types of treatment systems and should include provisions requiring safeguards to prevent the discharge of inadequately treated effluent.

3. Research on improved individual waste treatment systems should be continued.

   The large number of homes depending on individual treatment systems, and the sometimes less than adequate service of available treatment units insure a ready market for an improved treatment system, whether it is a completely new system or a modification of existing systems. Because of the septic tank's low maintenance and generally acceptable service, further improvement of septic tank design would seem a logical starting place. Most present designs have been related more closely to construction ease than to treatment efficiency, but new materials and new fabrication techniques may permit designs that encourage higher treatment efficiency and better maintenance. As an example, one possible design change which would theoretically improve septic tank digestion and solids removal would be the combination of the principles of the anaerobic contact process and the anaerobic filter (105). Improvement of aerobic treatment systems and the development of entirely new concepts should also be encouraged. Potentially, the aerobic treatment units can provide better waste treatment than anaerobic units; however, safety requirements indicate that subsurface filters are still desirable. The development of controls to economically monitor and control the effluent quality would encourage acceptance of aerobic treatment units with surface disposal.

4. An effort should be made to channel the high public interest in environmental protection into constructive public action.

   One possibility for extending and exploiting present public interest would be an effort to involve youth organizations in the program to combat deterioration of the environment. Many youth organizations, especially those like scouting with many outdoor activities, should welcome and actively support programs to cleanse and protect our polluted land and water resources. The ideas and practices fostered by such activities could also stimulate interest and activity in the adult segment of the population.

REFERENCES CITED IN THE TEXT

1. Advanced Waste Treatment Research Basic & Applied Sciences Branch, Division of Water Supply and Pollution Control. Summary Report, The Advanced Waste Treatment Research Program, January 1962-June 1964. P.H.S. Publ. No. 999-WP-24, 1965.

2. Advanced Waste Treatment Research, Federal Water Pollution Control Administration. Summary Report, Advanced Waste Treatment, July 1964-July 1967. FWPCA Publication No. WP-20-AWTR-19, 1968.

3. Anderson, J. S. and Watson, K. S. "Patterns of Household Usage", Journal American Water Works Association. Vol. 59, No. 10, Part 1, October 1967.

4. Badger, W. L. and Associates, "A Study of the Processes for the Production of Potable Water from Aqueous Wastes Developed in a Shelter." Report prepared for the Office of Civil Defense under Contract No. OCD OS 62-120, October 1962.

5. Barry, J. P., Bishop, H. K., and Guter, G. A., "Development of Design Criteria for an Electrochemical Water Reclamation System", prepared for Langley Research Center, NASA, August 1968.

6. Belasco, N. and Perry, D. M., "Waste Management and Personal Hygiene for Extended Space Craft Missions", paper presented to the American Industrial Hygiene Conference in Philadephia, Pa., April 1964.

7. Bell, G. S., "Residential Use and Misuse of Sanitary Sewers", JWPCF Vol. 35, No. 1, January 1963.

8. Bendixen, T. W. Individual Sewage Disposal Systems. Robert A. Taft Sanitary Engineering Center, November 1959.

9. Bendixen, T. W. and Weibel, S. R., Study on Septic Tanks and Septic Tank Disposal Systems. Agricultural Engineering, Vol. 32, No. 9, p. 449, September 1951.

10. Bialecki, A., Blecharzyk, S., and Oetken, E. R., "Progress on Saline Water Demineralization and Evaluation of the Hickman Still", General Dynamics Internal Report, 1957.

11. Brown, D. L., Lindstrom, R. W., and Smith, J. D., The Recovery of Water From Urine by Membrane Electrodialysis. AMRL-TDR-63-30, April 1963.

12. Campbell, L. A., Director Dept. of Applied Microbiology, Ontario Research Foundation, Ontario, Canada. Letter to V. T. Boatwright, Jr., September 1968.

13. Campbell, L. A., "A Feasibility Study of a Completely Recycled Water System in an Apartment Complex with a Population of 1,000 People." Report AM-6803 for Central Mortgage and Housing Corporation, March 1968.

14. Campbell, L. A., and Smith, D. K., "The Use of Water Within a Single Household, Canadian Municipal Utilities, February 1964.

15. Campbell, L. A. and Smith, D. K., "An Investigation of Individual Household Aerobic Sewage Treatment Units", Canadian Municipal Utilities, November-December 1963.

16. Clark, C. M., and Watson, K. S., "Garbage Grinders Add Only 30%", The American City, June 1962.

17. Clark, J. W., and Viessman, W., Jr., Water Supply and Pollution Control, International Textbook Company, Scranton, Pennsylvania, 575 pp.

18. Committee on Public Health Activities of the Sanitary Engineering Division, "A Study of Sewage Collection and Disposal in Fringe Areas", Journal of the Sanitary Engineering Division, Proceedings of the American Society of Civil Engineers. Paper 1613, Paper 1686, April 1958, and June 1958, respectively.

19. Cougan, G. J., Rosenthal, B. L., and O'Brien, J. E., "Aerobic Treatment of Household Wastes", Department of Public Health Experiment Station Report, February 1962.

20. Coulter, J. B., "Notes on the Use of Septic Tank Soil Absorption Systems", presented at the 1958 Home Sewage Disposal Conference, Michigan State University, January 1958.

21. Coulter, J. B., "The Septic Tank System in Suburbia", Public Health Reports, Vol. 73, No. 6, June 1958.

22. Coulter, J. B., Bendixen, T. W., "Serial Distribution, An Improved Design for the Septic Tank", Robert A. Taft Sanitary Engineering Center, October 1958.

23. Coulter, J. B., Bendixen, T. W., "Sewage Treatment Plants for the Suburban Sewerage System" paper presented at Iowa Sewage and Industrial Wastes Association Meeting, June 1960.

24. Coulter, J. B., Bendixen, T. W., and Thomas, H. A., Jr. "Metropolitanism and Sewage Handling Technology, Sewage and Industrial Wastes, p. 900, August 1959.

25. Crisp, J. and Sobolev, A., "Water and Fuel Economy - The Use of Spray Taps for Ablutions in Buildings", Journal of the Royal Institute of British Architects, July 1950.

26. Crisp, J. and Sobolev, A., "An Investigation of the Performance of Lavatories Using Spray-Taps and of Sanitary Accommodation in an Office Building", Reprint of Article from Journal of Institution of Water Engineers, 1959. Vol. 13, pp. 513-525.

27. Culp, G. L., "High Rate Clarification of Waste Waters", paper presented at the University of Kansas Sanitary Engineering Conference, January 1968.

28. Dague, R. R., McKinney, R. E., and Pfeffer, J. T., "Anaerobic Activated Sludge", JWPCF, Vol. 38, No. 2, February 1966.

29. Degen, R. A., "Product Manager Brass Fittings", Kohler Co., Kohler, Wisconsin". Letter to J. L. Dodson, General Dynamics, Electric Boat division, August 7, 1968.

30. Dorn, J. E., "Product Safety Director", Frigidaire Div. of General Motors Corp., Dayton, Ohio 45401, Letter to J. L. Dodson, July 31, 1968.

31. Duncan, D. L., "Individual Household Recirculating Waste Disposal System for Rural Alaska", JWPCF, Vol. 36, No. 12, December 1964.

32. Esten, H., Murray, R. W., and Cooper, L., "Vacuum Distillation, Vapor Pyrolysis Water Recovery System Utilizing Radioisotopes for Thermal Energy", AMRL-TR-67-80, WPAFB, November 1967.

33. Flaherty, W. F., "The Effect of Water Reuse on Water Quality", Water and Sewage Works, 114:8 354-357, August 1968.

34. Fox, J. J., Engineering Manager, Laundry Equipment Division, Westinghouse Electric Corp., 146 E. 4th St., Mansfield, Ohio 44901. Letter to J. L. Dodson, October 11, 1968.

35. Foyn, E., "Removal of Sewage Nutrients by Electolytic Treatment", Verh. Internat. Verein. Limnol., XV, 569-579, February 1964.

36. Garthe, E. C., and Gilbert, W. C., "Wastewater Reuse at the Grand Canyon", JWPCF, Vol. 40, No. 9, p. 1582, September 1968.

37. Geinopolos, A., Wullschleger, R. E., and Mason, D. G., "Engineering Design Study for the Development of a Self-Contained, Air-Transportable Wastewater Treatment Prototype (U)", report prepared for the U. S. Army Mobility Equipment Research and Development Center, Ft. Belvoir, Virginia, February 1968.

38. Hall, E. P. (Chairman Committee on Water Pollution from the Operation of Vessels), Wastes from Watercraft, A Report to the Congress, U. S. Dept. of the Interior, June 1967.

39. Haney, P. D. and Hamann, C. L., "Dual Water Systems", JAWWA, Vol. 57, No. 9, p. 1073, September 1965.

40. Hanna, G. P., Jr. and Shumate, K. S., "Evaluation of Effects of Enzyme Products on Overloaded Anaerobic Digestion Systems", Final Report to Rohm & Haas Company, April 1966.

41. Harrison, F. E., Managing Director, Cisterns Limited Addingham, Ilkley, Yorks, U. K., Letter to V. T. Boatwright Jr., September 1968.

42. Hill, R. D., Schwab, G. Q., Maleney, G. W., and Weiser, H. H., "Filtration and Disinfection of Farm Pond Water", Research Bulletin 966, Ohio Agricultural Experiment Station, August 1964.

43. Jackson, J. K., Bonura, M. L., and Putnam, D. F., "Evaluation of a Closed Life-Support System During a 60-Day Manned Test", paper presented to 1968 S. A. E., Aeronautic and Space Engineering Meeting at Los Angeles, California, October 1968.

44. Kinney, E. T., and Singerman, H. H., "The Navy's Technological Progress in Water Pollution Abatement", Fifth Annual Technical Symposium, Naval Ship Systems Command.

45. Kira, A., "The Bathroom, Criteria for Design", Research Report No. 7, Center for Housing and Environmental Studies, Cornell University, 1966.

46. Knight, B. M., General Manager, Richard Fife, Inc., 1140 Broadway, New York, N. Y. 10001, Letter to J. L. Dodson, General Dynamics, Electric Boat division, October 17, 1968.

47. Kolega, J. J., Wheeler, W. C., and Hawkins, G. W., Jr., "Current Septic Tank System Installation Practices in Connecticut", JWPCF, Vol. 38, No. 10, October 1966.

48. Kolnsberg, H. J., and Dudarevitch, M. D., "Water Reclamation by Membrane Vapor Diffusion", Transactions of the ASME Journal of Engineering for Industry, November 1968.

49. Linaweaver, F. P., Jr., "Report on Phase One, Residential Water Use Research Project", The Johns Hopkins University, Dept. of Sanitary Engineering, October 1963.

50. Ling, J. T., "Pilot Study of Treating Chemical Wastes With an Aerated Lagoon", JWPCF, Vol. 35, No. 8, p. 963, August 1963.

51. Ludwig, H. F., and Stewart, J., "Equilibrium Percolation Test for Estimating Soil Leaching Capacity", paper presented at the San Francisco National Meeting of the APHA, October 29-November 2, 1951.

52. Mason, D. G., "Engineering Evaluation of Reverse Osmosis and Ion Exchange Demineralization for Use in a Self-Contained, Air-Transportable Waste Water Renovation Unit (U)", Report prepared for U. S. Army Mobility Equipment Research and Development Center, Ft. Belvoir, Virginia, July 1968.

53. McGauhey, P. H. and Winneberger, J. H., "Studies of the Failure of Septic Tank Percolation Systems", Journal Water Pollution Control Federation, Vol. 36, p. 593, 1964.

54. McKee, J. E., and Wolf, H. W., Water Quality Criteria. Second Edition. Resources Agency of California, State Water Quality Control Board Publication 3-A, 548 pp., 1963.

55. McLaughlin, E. R., A Recycle System for Conservation of Water in Residences. Water & Sewage Works 115:4, April 1968, 175-176.

56. McNeil, W., "Urine Evaporator", USAF Aero Medical Laboratory, Wright Air Development Center, Technical Report No. 54-94, February 1954.

57. Michaels, A., Membranes, the Thin Difference. Industrial Research, April 1969, p. 48.

58. Miller, H. C., and Knipe, W., "Electrochemical Treatment of Municipal Waste Water", P. H. S. Publication No. 999-WP-19, 1965.

59. Morris, J. C., "Conventional Approaches Not Enough", Chemical Engineering Progress, Vol. 59, No. 4, November 1963.

60. National Academy of Sciences - National Research Council, Report on Individual Household Aerobic Sewage Treatment Systems, Publication 586, February 1958.

61. National Association of Home Builders, "Economic News Notes", Housing Starts Bulletin, September 17, 1968.

62. Office of Saline Water, U. S. Department of the Interior, "1966 Saline Water Conversion Report", 1966.

63. Office of Saline Water, U. S. Department of the Interior, "1967 Saline Water Conversion Report".

64. Ohio State University Engineering Experiment Station, "A 23-Month Study of Individual Household Aerobic Sewage Treatment Systems", July 1961.

65. Okey, R. W., and Stavenger, P. L., "Industrial Waste Treatment with Ultrafiltration Processes", Paper Presented to Symposium on Membrane Processes for Industry, Sponsored by the Southern Research Institute at Birmingham, Alabama in May 1966.

65A. Olsson, E., Karlgren, L., and Tullander, V., "Household Waste Water", The National Swedish Institute for Building Research, Report 24: 1968.

66. Parker, U. R., Installation Engr., Sloan Valve Co., 4300 West Lake Street, Chicago, Ill. 60624, Letter to J. L. Dodson, July 26, 1968.

67. Pecis, J. C., Vice President Research & Development, Speakman Co., Wilmington, Delaware 14899, Letter to J. L. Dodson, General Dynamics, Electric Boat division, July 22, 1968.

68. Popkin, R. A., and Bendixen, T. W., "Improved Subsurface Disposal", JWPCF, Vol. 40, No. 8, Part 1, August 1968.

69. Popma, D. C., and Collins, V. G., "Space Vehicle Water Reclamation Systems", paper presented at the 55th National Meeting of the American Institute of Chemical Engineers, Houston, Texas, February 1965.

70. Preul, H. C., "Underground Movement of Nitrogen", JWPCF, Vol. 38, No. 3, March 1966.

71. Public Health Service, "Public Health Service Drinking Water Standards". Revised 1962. U. W. Department of Health, Education and Welfare; Public Health Service, Washington 25, D. C. Public Health Service Publication No. 956, 1962.

72. Ranum, J. M., Executive Director, Corporate Public Affairs, Whirlpool Corp., Benton Harbor, Michigan 49022, Letter to J. L. Dodson, September 11, 1968.

73. Reid, G. W., "Projection of Future Municipal Water Requirements", Southwest Water Works S. 46:18, 1965.

74. Robeck, G. G., Cohen, J. M., Sayers, W. T., and Woodard, R. L., "Degradation of ABS and other Organics in Unsaturated Soil", JWPCF, Vol. 35, No. 10, p. 1225, October 1963.

75. Scott, J. A., "Health Considerations Involved in the Treatment and Disposal of Sewage from Isolated Dwellings", The Sanitarian, December 1952.

76. Slonim, A. R., Hallam, A. P., Jensen, D. H., and Kammermeyer, K., "Water Recovery from Physiological Sources for Space Applications", Life Support Systems Laboratory, Wright-Patterson Airforce Base, Ohio, July 1962

77. Smith, R., "Cost of Conventional and Advanced Treatment of Wastewaters", JWPCF, Vol. 40, No. 9, September 1968.

78. Sobolev, A., Building Research Station, Garsten, Watford, Herts. U.K., "Spray Traps", Reprint of Paper Published in Heating, Vol. 22, 1960.

79. Sobolev, A., and Lloyd, C. J., Building Research Station, Garsten, Watford, Herts, U.K., "Trials of Dual Flush Cisterns", Reprint from Journal of Institution of Water Engineers, Vol. 18, No. 1, February 1964.

80. Steele, James A., "Waste Management System Evaluation for Space Flights of One Year Duration", Report Prepared by General Dynamics/Astronautics for Langley Research Center, Hampton, Va., Contract NAS1-2934, October 1963.

81. Steele, J. A., Lubitz, J. A., Wallman, H., Benoit, R. J., Speziali, V. A., and Bolles, T. V., "A Study of Water Reclamation Systems for Space Stations", Research and Development Department, General Dynamics, Electric Boat division, Groton, Connecticut, Dec ember 31, 1962.

82. Steele, J. A., Lubitz, J. A., Wallman, H., Miner, H., and Speziali, V., "Water Reclamation Subsystems for Space Stations", Contract NAS 1-2208, July 1963.

83. Stevens, D. B., "Wastewater Reuse", JWPCF 40-4-677-683, April 1968.

84. Stevens, D. B., and Peters, J. H., "Long Island Recharge Studies", JWPCF 38:12, 2009, December 1966.

85. Technical Report No. LWT-68-1, "The Development, Design and Performance of Model No. 1100-10", Met-Pro Water Treatment Corporation, 1968.

86. Thomas, R. E., and Bendixen, T. W., "Domestic Water Use in Suburban Homes", Final Report to the Federal Housing Administration by the Robert A. Taft Sanitary Engineering Center, June 1962.

87. Thomas, H. A., Jr., Coulter, J. B., Bendixen, T. W., and Edwards, A. B., "Technology and Economics of Household Sewage Disposal Systems", JWPCF, Vol. 32, No. 2, February 1960.

88. U. S. Department of Commerce, Bureau of the Census, "Statistical Abstract of the United States", 1968. 80th Edition.

89. U. S. Department of Commerce, Bureau of the Census, "1960 U. S. Housing Census, Volume I".

90. U. S. Department of Health, Education, and Welfare, "Manual of Septic-Tank Practice", Public Health Service Publication No. 526, 1967.

91. U. S. Department of Health, Education, and Welfare, "Septic Tank Care", Public Health Service Publication No. 73, 1967.

92. U. S. Department of the Interior, Federal Water Pollution Control Administration, "Problems of Combined Sewer Facilities and Overflows 1967", WP-20-11.

93. Wallman, H., and Barnett, S. M., "Water Recovery Systems (Multi-Variable)", Prepared by General Dynamics Corporation for the Aerospace Medical Laboratory at Wright-Patterson Air Force Base under Contract AF 33 (616) - 6425, 1959.

94. Wallman, H., Steele, J. A., and Lubitz, J. A., "Multi-Filter System for Water Reclamation", Aerospace Medicine, Vol. 36, No. 1, January 1965.

95. Water Quality Criteria, "Report of the National Technical Advisory Committee to the Secretary of the Interior", 234 pp. April 1, 1968. Federal Water Pollution Control Administration, Washington, D. C.

96. Watson, K. S., "Water Requirements of Dishwashers and Food Waste Disposers", Journal American Water Works Association, Vol. 55, No. 5, May 1963.

97. Watson, K. S., Farrell, R. P., Anderson, J. S., "Contribution from the Individual Home to the Sewer System", JWPCF 39:12, 2039-2054, December 1967.

98. Wheaton, R. B., Brown, J. R. C., Ramirez, R. V., and Roth, N. G., "Investigation of the Feasibility of Wet Oxidation for Space Craft Waste Treatment", Report Prepared for National Aeronautics and Space Administration under Contract NAS 1-6295, by Whirlpool Corporation, 1966.

99. Williams, R. W., Manager Product Planning, American Std. Plumbing & Heating Division, 40 West 40th Street, New York, N. Y. 10018. Letter and phone conversation, July 29, 1968, to J. L. Dodson.

100. Winneberger, J. H., Francis, L., Klein, S. A., and McGauhey, P. H., "A Study of Methods of Preventing Failure of Septic-Tank Percolation Fields, Fourth Annual Report", Sanitary Engineering Research Laboratory, University of California, Berkeley, August 1960.

101. Winneberger, J. H., and McGauhey, P. H., "A Study of Methods of Preventing Failure of Septic-Tank Percolation Fields, Fourth Annual Report", Sanitary Engineering Research Laboratory, University of California, Berkeley, SERL Report No. 65-16, October 1965.

102. Winneberger, J. H., Menar, A. B., and McGauhey, P. H., "A Study of Methods of Preventing Failure of Septic-Tank Percolation Fields, Third Annual Report", Sanitary Engineering Research Laboratory, University of California, Berkeley, SERL Report No. 63-9, December 1963.

103. Witchger, E. S., Director Special Projects, Elger Plumbingware Div., Wallace Murray Corp., 650 Washington Rd., Pittsburgh, Pa. 15228. Letter to H. Wallman, October 21, 1968.

104. Witherow, J. L., Coulter, J. B., and Ettinger, M. B., "Suburban Sewage Treatment by the Anaerobic Contact Process", Robert A. Taft Sanitary Engineering Center, December, 1957.

105. Young, J. C., and McCarty, P. L., "The Anaerobic Filter for Waste Treatment", JWPCF, Vol. 41, No. 5, Part 2, May 1969.

106. Zeff, J. D., and Bambenek, R. A., "Development of a Unit for Recovery of Water and Disposal or Storage of Solids from Human Wastes", American Machine and Foundry Company Contract No. AF 33(616)-5783, January 1959.

107. Zeitoun, M. A., Davison, R. R., White, F. B., and Hood, D. W., "Solvent Extraction of Secondary Wastewater Effluents: Heterogeneous Equilibrium of Organic and Inorganic Compounds", JWPCF, Vol. 38, No. 4, April 1966.

108. Ziemke, N. R., and Allen, G. S., "Functional Testing Reports, The Armon System", Tests by Sanitary Engineering Research Company, 1966.

ADDITIONAL REFERENCES

Ames Research Center, "The Closed Life-Support System", report prepared by National Aeronautics and Space Administration, April 1966.

Aquatic Life Advisory Committee of the Ohio River Valley Water Sanitation Commission, "Aquatic Life Water Quality Criteria", JWPCF - Vol. 32, No. 1, January 1960.

Baffa, J. J., and Bartilucci, N. J., "Waste Water Reclamation by Ground Water Recharge on Long Island", JWPCF Vol. 39, No. 3, March 1967.

Barduhn, A. J., "Where Do the Chemical Engineers Come In?", Chemical Engineering Progress, Vol. 59, No. 11, November 1963.

Bendixen, T. W., Thomas, R. E., and Coulter, J. B., "Study of Seepage Pits", Robert A. Taft Sanitary Engineering Center, May 1963.

Clark, B. D., "Houseboat Wastes, Methods for Collection and Treatment", Federal Water Pollution Control Administration, June 1967.

Coulter, J. B., and Bendixen, T. W., "A Study of Serial Distribution for Soil Absorption Systems", Robert A. Taft Sanitary Engineering Center, April 1959.

Committee on Rural Sanitation, "Rural Sanitation", American Journal of Public Health, Vol. 30, No. 5, May 1949.

Coulter, J. B., Bendixen, T. W., and Edwards, A. B., "Study of Seepage Beds Part I", Robert A. Taft Sanitary Engineering Center, February 1960.

Coulter, J. B., and Bendixen, T. W., "Report to Federal Housing Administration on Study to Determine if Distribution Boxes can be Eliminated Without Inducing Increased Failure of Disposal Fields", Robert A. Taft Sanitary Engineering Center.

Coulter, J. B., "Limitations on the Use of Septic Tank Systems", Robert A. Taft Sanitary Engineering Center.

Coulter, J. B., Bendixen, T. W., and Edwards, A. B., "Study of Seepage Beds", Report to the Federal Housing Administration by the Robert A. Taft Sanitary Engineering Center, December 1960.

Coulter, J. B., "Sewage Disposal Systems Applicable to Subdivisions", paper presented to National Association of Home Builders Convention - Exposition at Chicago, Illinois, January 1957.

Coulter, J. B., Soneda, S., and Ettinger, M. B., "Preliminary Studies on Complete Anaerobic Sewage Treatment", Journal of the Sanitary Engineering Division. Proceedings of the American Society of Civil Engineers. Proceedings Paper 1089, March 1957.

Coulter, J. B., Bendixen, T. W., and Edwards, A. B., "Study of Seepage Beds, Part II", Robert A. Taft Sanitary Engineering Center, May 1960.

Eastman, "Municipal Wastewater Reuse for Irrigation", Journal of the Irrigation and Drainage Division, Proceedings of the American Society of Civil Engineers 93:IR3, 25 (1967).

Evans, D. M., "Man-made Earthquakes in Denver", Geotimes 10:9, 11-18, May-June 1966.

Federal Water Pollution Control Administration, U. S. Dept. of the Interior, The Cost of Clean Water. October 1967.

Gallagher, E., "Water Reuse as a Method of Water Supply and Pollution Reduction", Water and Sewage Works, August 1968, p. 356.

General Atomic Division of General Dynamics, "Reverse Osmosis for Waste Water Treatment", March 1967.

Gerster, J. A., "Cost of Purifying Municipal Waste Waters by Distillation", prepared for The Advanced Waste Treatment Research Program. U. S. Dept. of Health, Education, and Welfare, November 1963.

Hickey, J. L. S., and Duncan, D. L., "Performance of Single Family Septic Tank Systems in Alaska", JWPCF, Vol. 38, No. 8, August 1966.

Hickman, K. C., "A Study of Distillation Processes for Potable Water Recovery and Residue Disposal", paper presented at the seminar on Advanced Waste Treatment Research in Cincinnati, Ohio, May 1962.

Horowitz, H., "The Effect of Automatic-Sequence Clothes Washing Machines on Individual Sewage Disposal Systems", Report No. 5 to the Federal Housing Administration by the Building Research Advisory Board. National Academy of Sciences - National Council Publication 442, March 1956.

Hydo, C. G., "The Beautification and Irrigation of Golden Gate Park with Activated Sludge Effluent", Sewage Works Journal, Volume 9, No. 6, November 1937.

Inglefinger, A. L., Secord, L. C., and Arndt, W. F., "Life Support System Manned Testing with Oxygen and Water Recovery". McDonnell Douglas Corporation.

Ingram, W. T., Cardenas, R., Broglie, J., and Slate, L., "Space Capsule Waste Treatment and Potable Water Recovery", Journal Water Pollution Control Federation, p. 38, January 1964.

Jones, J. H., and Taylor, G. S., "Septic Tank Effluent Percolation Through Sands Under Laboratory Conditions", Soil Science, Vol. 99, No. 5.

Ledbetter, J. O., "Can We Afford Zero Health Risks", Water and Sewage Works, Vol. 115, No. 9, p. 438, September 1968.

LeGrand, H. E., "A Broad View of Waste Disposal in the Ground", Water and Sewage Works, Vol. 114, R. N., P. R-179.

LeGrand, H. E., "Management Aspects of Ground Water Contamination", JWPCF, Vol. 36, No. 9, September 1964.

Lubitz, J. A., Benoit, R. J., Wallman, H., and Adamson, T. E., "Wash Water Reclamation for Extended Duration Space Voyages", paper presented at 1st American Institute of Aeronautics and Astronautics Annual Meeting at Washington, D. C., June 1964.

Mattson, R. J., and Tomsic, V. S., "Improved Water Quality", Chemical Engineering Progress, Vol. 65, No. 1, January 1969.

McGauhey, P. H., and Winneberger, J. H., "A Study of Methods of Preventing Failure of Septic Tank Percolation Systems", booklet published by Department of Housing and Urban Development, Federal Housing Administration, October 1967.

McKee, J. E., "Reclaimed Sewage Water Socially Okay", Environmental Science and Technology, Vol. 3, No. 1, January 1969.

McMahan, A. A., and Bendixen, T. W., "Report to the Federal Housing Administration on the Frequency of Occurrence of Water-Using Appliances in Suburban Homes Having Individual Sewage Disposal Systems", March 1961.

Merten, U., "Reverse Osmosis", General Atomic Division of General Dynamics, May 1965.

Merten, U., Nusbaum, I., and Miele, R., "Organic Removal by Reverse Osmosis", paper presented at the American Chemical Society Symposium on Organic Residue Removal from Waste Waters, September 1968, Atlantic City, N. J.

Metzger, C. A., Hearld, A. B., and McMullen, B. G., "Water Recovery from Human Waste During Prolonged Confinement in the Life Support System Evaluator", Aerospace Medical Research Laboratory, Wright-Patterson Air Force Base, Ohio, April 1966.

Metzger, C. A., Hearld, A. B., and McMullen, B. G., "Evaluation of Water Reclamation Systems and Analysis of Recovered Water for Human Consumption", AMRL-TR-66-137 WPAFB, February 1967.

Michaels, A. S., "New Separation Technique for the C. P. I.", Chemical Engineering Progress, Vol. 64, No. 12, December 1968.

National Academy of Sciences, National Research Council, "Alternatives in Water Management", 1966.

Neale, J. H., "Advanced Waste Treatment by Distillation", report for the Advanced Waste Treatment Research Program, U. S. Dept. of Health, Education, and Welfare, March 1964.

Nichols, D. C., "Water Reclamation from Urine Thermoelectric System", AMRL-TR-65-29, WPAFB, March 1965.

Nuccio, P. P., and Jasionowski, W. J., "Automatic Water Recovery System", AMRL-TR-67-155, WPAFB, March 1968.

Oakley, H. R., and Cripps, T., "British Practice in the Treatment of Waste Water", JWPCF, Vol. 41, No. 1, January 1969.

Pecoraro, J. R., Pearson, A. O., Drake, G. L., and Burnett, J. R., "Contributions of a Developmental Integrated Life Support System to Aerospace Technology", paper presented at American Institute of Aeronautics and Astronautics, 4th Annual Meeting and Technical Display at Anaheim, California, October 1967.

Porges, R., and Morris, G. L., "Extended Aeration Sewage Treatment, A Preliminary Evaluation", publication of the U. S. Public Health Service, Robert A. Taft Sanitary Engineering Center 1960.

Robeck, G. G., Bendixen, T. W., Swartz, W. A., and Woodward, R. L., "Factors Influencing the Design and Operation of Soil Systems for Waste Treatment", JWPCF, Vol. 36, No. 8, August 1964.

Ryan, M. J., and Edgerley, E., "Water Recovery from Human Liquid Wastes by Distillation and Chemical Oxidation", USAF School of Aerospace Medicine, Brooks Air Force Base, Texas, December 1967.

Slonim, A. R., "Rapid Procedures to Monitor Water for Potability", Aerospace Medicine, Vol. 39, No. 11, November 1968.

Stanford Research Institute, "Long Range Planning Report: "Water", Report No. 16, September 1959.

Stephan, D. G., and Weinberger, L. W., "Waste Water Reuse -- Has It 'Arrived'", paper presented at 40th Annual Conference of the Water Pollution Control Federation, New York, N. Y., October 1967.

Stevens, D. B., "Wastewater Reuse, Status in New York State", paper presented at the 40th Annual Meeting of the Water Pollution Control Federation in New York City, N. Y., October 1967.

Sudak, R. G., and Nusbaum, I., "Pilot Plant Operation of Spiral Wound Reverse Osmosis Systems", paper presented at the Western Water and Power Symposium, April 1968, at Los Angeles, Calif.

Table A-1. Waste Treatment Manufacturers*

Manufacturer Contacted	Location	Type Process
1. Fifer Industries Inc.	Louisville, Ky.	"Fiferator" Aerobic Stabilization
2. DuPont	Wilmington, Del.	Reverse Osmosis
3. Gulf General Atomic	San Diego, Calif.	Reverse Osmosis
4. Hamilton Southern Assn.	Hickory, N. C.	Aerobic Stabilization
5. Jet Aeration Co.	Cleveland, Ohio	Aerobic Stabilization
6. Valdespino Labs	Orlando, Fla.	Aerobic Stabilization
7. Dorr Oliver	Stamford, Conn.	No Process
8. Rex Chain Belt	Milwaukee, Wis.	No Process
9. Yeomans	Melrose Park, Ill.	Aerobic Stabilization
10. General Electric Co.	Schenectady, N. Y.	Aerobic Stabilization
11. Cromaglass Corp.	Williamsport, Pa.	Aerobic Stabilization
12. Converto Co.	Montreal, P. Q.	Aerobic Stabilization
13. Wilson Water Purif. Company	Buffalo, N. Y.	Hypochlorination
14. BIO_2 Systems Inc.	Kansas City, Mo.	Aeration Stabilization Trickle Filter
15. Svenska Interpur Ab	Stockholm, Sweden	Spiral Bio-Filter
16. Allenaire, Inc.	Warren, Ohio	Aerobic Stabilization
17. Convert-All, Inc.	Brunswick, Maine	Aerobic Stabilization
18. Microphor, Inc.	Willits, Calif.	Aerobic Stabilization
19. Sewerless Toilet Co.	Lafayette, Indiana	Aerobic Stabilization

Of the nineteen manufacturers listed above fourteen made individual home treatment units or contemplated making them. These fourteen are:

1. Fifer Industries
2. Yeomans (Cavitette)
3. Cromaglass Corp.
4. Converto Co.
5. Jet Aeration Corp.
6. Valdespino Labs
7. Hamilton Southern
8. Wilson Water Purification Co.
9. BiO_2 Systems
10. Svenska Interpur Ab
11. Allenaire, Inc.
12. Convert-All, Inc.
13. Microphor, Inc.
14. Sewerless Toilet Co.

*Mention of a commercial product or manufacturer does not imply endorsement by the Federal Water Pollution Control Administration.

Table A-II. Manufacturers Supplying Information On Plumbing Fixtures*

Plumbing Valves & Fittings

Harcraft Brass, Torrance, Cal.

Speakman Company, Wilmington, Del.

Water Saver Faucet, Chicago, Ill.

Mueller Brass Company, Port Huron, Mich.

Sloan Valve Company, Chigago, Ill.

Milwaukee Faucets, Inc., Milwaukee, Wis.

Beacon Valves, Waltham, Mass.

Plumbing Fixtures and Water Closets

Kohler Company, Kohler, Wis.

Eljer Plumbingware Co., Pittsburg, Pa.

American Standard Controls Div., NYC, N. Y.

Monogram Industries, Inc.

Incinomode Inc., Garland, Texas

LaMere Industries, Walworth, Wis.

Major Appliances

Norge

Westinghouse

Whirlpool

General Electric Co., Schenectady, N.Y.

Kelvinator Division

Kitchen Aid Hobart, Troy, Ohio

*Mention of a commercial product or manufacturer does not imply endorsement by the Federal Water Pollution Control Administration.

Table A-III. Cost Data For Liljendahl* Vacuum Toilet

COST COMPARISON NO. 1

Estimated cost including a comparison of conventional versus vacuum closets in a single home:

1. Home with conventional closets:

A.	3" plastic pipe and vents for closets, lavatories, baths and sink	$280.00
B.	2-conventional closets @ $25,00 each	$ 50.00
C.	Labor (Installation)	$165.00
	Total	$495.00

2. Home with vacuum closets:

A.	2" plastic pipe and vents for lavatories, baths and sink	$175.00
B.	1-1/2" plastic pipe for closets	$ 60.00
C.	2-vacuum closets @ $57.00 each	$114.00
D.	Labor (Installation)	$175.00
	Total	$524.00

3. Cost of vacuum collection system for single home installation, including vacuum pumps, tank, miscellaneous piping, gages, electrical equipment and sludge transport unit. $1300.00

4. Cost of vacuum collection system for 100 homes, including vacuum pumps, tanks, miscellaneous piping, gages, electrical equipment, sludge pump and shelter $7500.00

*Mention of a commercial product or manufacturer does not imply endorsement by the Federal Water Pollution Control Administration.

COST COMPARISON NO. 2

The cost of water used by the conventional closet versus the vacuum closet was evaluated based on the following information received from private industry, government, state and local authorities:

1. People per home - 4.5
2. Total gallons per day per person - 75
3. Water rates (national average)
4. Gallons per day per person used by conventional closet - 30
5. Gallons per day per person used by vacuum closet - 2-1/4 (based on present design)

A.	Cost of water used in home per month with conventional closet	$6.29
B.	Cost of water used in home per month with vacuum closet	$3.71
	Savings per month	$2.58

COST COMPARISON NO. 3

The additional cost of electricity to operate the vacuum pump was estimated based on $.015 per K.W.H.:

1.	Additional cost for single home vacuum collection system with 1/4 HP pump per month	$ .837
2.	Additional cost per home in allotment of 100 homes with vacuum collection system with 5 HP pump per month	$ .183

Table A-IV. Preliminary Cost Comparisons (Annual Cost in Dollars per Person)

System		Annual Equipment and Operating Cost	Water Cost	Waste Disposal Cost	Total Annual Cost	Annual Savings; (-) Indicates Increased Costs
1. Conventional Systems						
(a) Sewers (average water cost)			$10.00	$10.50	$20.50	------
(b) Septic tank, good soil		(avg. water cost)	10.00	11.20	21.20	------
(c) Septic tank, fair soil		(avg. water cost)	10.00	16.10	26.10	------
(d) Septic tank, poor soil		(avg. water cost)	10.00	33.70	43.70	------
(e) Sewers (low water cost)			4.80	10.50	15.30	------
(f) Sewers (high water cost)			28.60	10.50	39.10	------
2. Flow Control Showers	(a)	$0.50	9.10	9.50	19.10	$1.40
	(b)	0.50	9.10	10.20	19.80	1.40
	(c)	0.50	9.10	14.70	24.30	1.80
	(d)	0.50	9.10	30.80	40.40	3.30
	(e)	0.50	4.30	9.50	14.30	1.00
	(f)	0.50	26.00	9.50	36.00	3.10
3. Flow Control Faucet (Kitchen or Lavatory)	(a)	0.80	9.70	10.10	20.60	-0.10
	(b)	0.80	9.70	10.80	21.30	-0.10
	(c)	0.80	9.70	15.60	26.10	0.00
	(d)	0.80	9.70	32.70	43.20	0.50
	(e)	0.80	4.60	10.10	15.50	-0.20
	(f)	0.80	27.70	10.10	38.60	0.50

Table A-IV. (Cont'd)

System		Annual Equipment and Operating Cost	Water Cost	Waste Disposal Cost	Total Annual Cost	AnnualSavings; (-) Indicates Increased Costs
4. Faucet Aerators	(a)	$0.05	$ 9.92	$10.42	$20.39	$0.11
	(b)	0.05	9.92	11.10	21.07	0.13
	(c)	0.05	9.92	16.00	25.97	0.13
	(d)	0.05	9.92	33.40	43.37	0.33
	(e)	0.05	4.70	10.42	15.17	0.13
	(f)	0.05	28.30	10.42	38.77	0.33
5. Automatic Flush Valve Toilets	(a)	1.65	8.90	9.40	19.95	0.55
	(b)	1.65	8.90	10.10	20.65	0.55
	(c)	1.65	8.90	14.50	25.05	1.05
	(d)	1.65	8.90	30.00	40.55	3.15
	(e)	1.65	4.20	9.40	15.25	0.05
	(f)	1.65	25.40	9.40	36.45	2.65
6. Automatic Flush Toilets (2 Cycles)	(a)	2.60	8.30	8.80	19.70	0.80
	(b)	2.60	8.30	9.50	20.40	0.80
	(c)	2.60	8.30	13.60	24.50	1.60
	(d)	2.60	8.30	29.10	40.00	3.70
	(e)	2.60	3.90	8.80	15.30	0.00
	(f)	2.60	23.70	8.80	35.10	4.00

Table A-IV. (Cont'd)

System		Annual Equipment and Operating Cost	Water Cost	Waste Disposal Cost	Total Annual Cost	Annual Savings; (-) Indicates Increased Costs
7. Shallow Trap Toilets	(a)	$ 1.60	$ 8.70	$ 9.10	$ 19.40	$ 1.10
	(b)	1.60	8.70	9.80	20.10	1.10
	(c)	1.60	8.70	14.20	24.50	1.60
	(d)	1.60	8.70	29.70	40.00	3.70
	(e)	1.60	4.10	9.10	14.80	0.50
	(f)	1.60	24.80	9.10	35.50	3.60
8. English Style Toilets	(a)	1.20	7.90	8.30	17.40	3.10
	(b)	1.20	7.90	9.10	18.20	3.00
	(c)	1.20	7.90	13.10	22.20	3.90
	(d)	1.20	7.90	27.30	36.40	7.30
	(e)	1.20	3.80	8.30	13.30	2.00
	(f)	1.20	22.50	8.30	32.00	7.10
9. English Style (Dual Flush)	(a)	1.40	7.20	7.50	16.10	4.40
	(b)	1.40	7.20	8.30	16.90	4.30
	(c)	1.40	7.20	12.00	20.60	5.50
	(d)	1.40	7.20	25.10	33.70	10.00
	(e)	1.40	3.40	7.50	12.30	3.00
	(f)	1.40	20.50	7.50	29.40	9.70

Table A-IV. (Cont'd)

System		Annual Equipment and Operating Cost	Water Cost	Waste Disposal Cost	Total Annual Cost	Annual Savings; (-) Indicates Increased Costs
10. Vacuum Flush Toilet Single Home	(a)	$ 40.00	$ 6.40	$ 6.70	$ 53.10	$ -32.60
	(b)	40.00	6.40	7.50	53.90	-32.70
	(c)	40.00	6.40	10.90	57.30	-31.20
	(d)	40.00	6.40	22.70	69.10	-25.40
	(e)	40.00	3.00	6.70	49.70	-34.40
	(f)	40.00	18.30	6.70	65.00	-25.90
11. Recycle Toilets	(a)	26.30	6.00	6.30	38.60	-18.10
	(b)	26.30	6.00	7.20	39.50	-18.30
	(c)	26.30	6.00	10.40	42.70	-16.60
	(d)	26.30	6.00	21.60	53.00	-10.20
	(e)	26.30	2.90	6.30	35.50	-20.20
	(f)	26.30	17.10	6.30	49.70	-10.60
12. Incinerator Toilets	(a)	24.00	5.70	6.00	35.70	-15.20
	(b)	24.00	5.70	6.80	36.50	-15.30
	(c)	24.00	5.70	9.90	39.60	-13.50
	(d)	24.00	5.70	20.60	50.30	- 6.60
	(e)	24.00	2.70	6.00	32.70	-17.40
	(f)	24.00	16.30	6.00	46.30	- 7.20

Table A-IV. (Cont'd)

System		Annual Equipment and Operating Cost	Water Cost	Waste Disposal Cost	Total Annual Cost	Annual Savings; (-) Indicates Increased Costs
13. Reuse of Wash Water for Toilet Flushing	(a)	$ 9.10	$ 5.90	$ 6.70	$ 21.70	$ -1.20
	(b)	9.10	5.90	7.50	22.50	-1.30
	(c)	9.10	5.90	10.60	25.60	.50
	(d)	9.10	5.90	21.30	36.30	7.40
	(e)	9.10	2.80	6.70	18.60	-3.30
	(f)	9.10	16.80	6.70	32.60	6.50
14. Multifiltration (All Non-Sanitary Wastes)	(a)	34.00	4.10	4.30	42.40	-21.90
	(b)	34.00	4.10	5.30	43.40	-22.20
	(c)	34.00	4.10	7.60	44.70	-18.60
	(d)	34.00	4.10	15.90	54.00	-10.30
	(e)	34.00	2.00	4.30	40.30	-25.00
	(f)	34.00	11.70	4.30	50.00	-10.90
15. Reverse Osmosis	(a)	118.00	4.10	4.30	126.40	-105.90
	(b)	118.00	4.10	5.30	127.40	-106.20
	(c)	118.00	4.10	7.60	129.70	-103.60
	(d)	118.00	4.10	15.90	138.00	- 94.30
	(e)	118.00	2.00	4.30	124.30	-109.00
	(f)	118.00	11.70	4.30	134.00	- 94.90

Table A-IV. (Cont'd)

System		Annual Equipment and Operating Cost	Water Cost	Waste Disposal Cost	Total Annual Cost	Annual Savings; (-) Indicates Increased Costs
16. Distillation (All Non-Sanitary Wastes)	(a)	$ 80.00	$ 4.10	$ 4.30	$ 88.40	$ -67.90
	(b)	80.00	4.10	5.30	89.40	-68.20
	(c)	80.00	4.10	7.60	91.70	-65.60
	(d)	80.00	4.10	15.90	100.00	-56.30
	(e)	80.00	2.00	4.30	86.30	-71.00
	(f)	80.00	11.70	4.30	96.00	-56.90
17. Distillation (All Wastes - Reuse Except Drinking)	(a)	100.00	1.50	1.60	103.10	-82.60
	(b)	100.00	1.50	2.70	104.20	-83.00
	(c)	100.00	1.50	3.90	105.90	-79.80
	(d)	100.00	1.50	8.00	109.50	-65.80
	(e)	100.00	0.70	1.60	102.30	-87.00
	(f)	100.00	4.30	1.60	105.90	-66.80
18. Aerobic Treatment	(a)	23.00	10.00	10.50	43.50	-23.00
	(b)	23.00	10.00	3.70	37.70	-16.50
	(c)	23.00	10.00	5.40	38.40	-12.30
	(d)	23.00	10.00	10.40	43.40	.30
	(e)	23.00	4.80	10.50	38.30	-23.00
	(f)	23.00	28.60	10.50	62.10	-23.00

Table A-IV. (Cont'd)

System		Annual Equipment and Operating Cost	Water Cost	Waste Disposal Cost	Total Annual Cost	Annual Savings; (-) Indicates Increased Costs
19. Electrolytic Treatment (In Place of Septic Tank)	(a)	$ 53.00	$ 10.00	$ 2.60	$ 65.60	$ -45.10
	(b)	53.00	10.00	2.80	65.80	-44.60
	(c)	53.00	10.00	4.00	67.00	-40.90
	(d)	53.00	10.00	8.40	71.40	-27.70
	(e)	53.00	4.80	2.60	60.40	-45.10
	(f)	53.00	28.60	2.60	84.20	-45.10
20. Biological Treatment (Reuse Except for Drinking)	(a)	57.00	1.50	1.60	60.10	-39.60
	(b)	57.00	1.50	2.70	61.20	-40.00
	(c)	57.00	1.50	3.90	62.40	-36.30
	(d)	57.00	1.50	8.00	66.50	-23.20
	(e)	57.00	0.70	1.60	59.30	-44.00
	(f)	57.00	4.30	1.60	62.90	-23.80
21. Coagulation Sedimentation and Filtration (All Wastes, Reuse for Toilet Flush)	(a)	35.00	5.70	6.00	46.70	-26.20
	(b)	35.00	5.70	6.80	47.50	-26.30
	(c)	35.00	5.70	9.90	50.60	-24.50
	(d)	35.00	5.70	20.60	61.30	-18.40
	(e)	35.00	2.70	6.00	43.70	-28.40
	(f)	35.00	16.30	6.00	57.30	-18.20

Table A-IV. (Cont'd)

System		Annual Equipment and Operating Cost	Water Cost	Waste Disposal Cost	Total Annual Cost	Annual Savings; (-) Indicates Increased Costs
22. Coagulation Sedimentation, Filtration Adsorption (Reuse Except for Drinking)	(a)	$ 80.00	$ 1.50	$ 1.60	$ 83.10	$ -62.60
	(b)	80.00	1.50	2.70	84.20	-63.00
	(c)	80.00	1.50	3.90	85.40	-59.30
	(d)	80.00	1.50	8.00	89.50	-45.80
	(e)	80.00	0.70	1.60	82.30	-67.00
	(f)	80.00	4.30	1.60	85.90	-46.80
23. Carbon Filtration and Adsorption of Non-Sanitary Wastes (Reuse Except for Drinking)	(a)	30.00	4.10	4.30	38.40	-17.90
	(b)	30.00	4.10	5.30	39.40	-18.20
	(c)	30.00	4.10	7.60	41.70	-15.60
	(d)	30.00	4.10	15.90	50.00	- 6.30
	(e)	30.00	2.00	4.30	36.30	-21.00
	(f)	30.00	11.70	4.30	46.00	- 6.90

Table A-V. Questionnaire Distribution

Localities in which questionnaires have been distributed:

1. San Diego, California
2. Rochester, New York
3. Avenel, New Jersey
   Newark, New Jersey
   New York, New York
4. Tulsa, Oklahoma
   Dallas, Texas
   Oklahoma City, Oklahoma
   Ft. Worth, Texas
5. Chicago, Illinois
6. Ft. Walton Beach, Florida
   Cocoa Beach, Florida
7. District of Columbia
8. New London, Connecticut
9. Pomona, California

Approximate number of questionnaires distributed in each locality:

Home Owner Questionnaires	55
Plumbing Contractor Questionnaires	25
Architect-Engineer Questionnaires	15

Sixteen (16) questionnaires were sent to a representative group of plumbing equipment manufacturers throughout the country.

Table A-VI. Results of the Survey of Homeowners

No. of Response

(387) 1. Approximately what is the market value of your home?
24 less than $15,000 241 $15,000 to $30,000 122 over $30,000

(387) 2. How many people live in your home? ___ adults ___ children under 21 (no correlation)
(include non-family members of household).

(387) 3. Where do you get the water for your home? (check one)
285 city water system 66 private well 38 community well

(387) 4. Do you have city sewer service? 247 yes 140 no
If your answer is yes, go to question 15. If your answer is no, complete entire questionnaire.

(149) 5. How do you dispose of bathroom and kitchen waste waters?

a. septic tank, soil absorption 134

b. cesspool 15

c. other, please specify _____

(167) 6. What maintenance do you give your sewage disposal system? (please check)

a. Pump out septic tank when plumbing is sluggish 47

b. Add chemicals to septic tank when plumbing is sluggish 26

c. Pump out septic tank every three years 24

d. Check tank every year and pump out when needed 32

e. Other, please describe 38

(139) 7. How do you dispose of laundry waste water?

a. With bathroom and kitchen waste waters 94

b. In a separate system 45 what type? Soil Absorption (90%)

8. Has your waste disposal system needed service or repair in the past three years?

53 yes 33 minor (less than $50) 80 no

20 major (over $50)

(133) 9. How many years has the system been in operation? average 10.9 yr.

(141) 10. Do you think that you need a more effective system? 57 yes 84 no

(133) 11. Would you be willing to pay more for a trouble-free system? 66 yes 67 no

(136) 12. Would you prefer an individual household treatment system or a community treatment system?

55 individual household system 81 community system

(134) 13. Septic tank systems cost between $500 and $2000 to install. Would you consider the same price range to be a reasonable cost for obtaining a system that would provide service comparable to that provided by city sewers? 110 yes 24 no

(127) 14. The city sewer service charge (often included in property taxes or collected with water charges) varies from about $25 to more than $200 per year. Would you be willing to pay a comparable price for similar service for your home? 77 yes 50 no

15. Would the reuse of treated waste water from bathing or laundering be acceptable to you for:

(374) a. Toilet flushing 306 yes 68 no

(371) b. Lawn or garden watering 303 yes 68 no

16. Would you object to using any of the following water saving devices in your home? (Please check one column for each device)

		Would Object	Would Not Object
(376)	a. Water saving faucets and shower heads that deliver adequate, but not excessive water.	51	325
(378)	b. Direct flush toilets such as are found in most public restrooms and which use only about 1/2 the water of the common tank type toilet.	32	346
(365)	c. Toilets with separate flush cycles for liquid and solid sanitary wastes.	78	287
(366)	d. Home urinals.	231	135
(366)	e. Toilets that disinfect and reuse flush water many times, such as those found on the planes of major airlines.	197	169

(370) 17. Do you feel that your water and waste disposal systems prevent your family from being exposed to disease? 312 yes 58 no

(387) 18. Do you wish to have a summary of the information obtained from this questionnaire sent to you? 196 yes 191 no

If yes, please provide your name and address on the separate sheet of paper enclosed.

Table A-VII Results of The Survey of Plumbing Contractors

No. of Responses		In Private Homes Yes	In Private Homes No	In Commercial Applications Yes	In Commercial Applications No
	1. Have you ever installed any of these devices? Check "yes" or "no" for each use.				
(38)	a. Water saving faucets or shower heads.	27	11	24	13
(39)	b. Direct flush valves for toilets	18	15	35	4
(36)	c. Toilets with separate flush cycles for urine and feces	4	31	5	31
(39)	d. Urinals	12	16	35	4
(36)	e. Toilets that disinfect and reuse flushing water many times, such as those found on jet aircraft	1	34	2	34
	f. Other, please specify_____	___	___	___	___

2. Do you foresee particular installation difficulties with any of these devices?

		No Installation Problem (check)	Possible Installation Problem (Please Describe)
(38)	a. Water saving faucets or shower heads	37	1
(42)	b. Direct flush valves for toilets	25	17
(26)	c. Toilets with separate flush cycles for urine and feces	16	10
(35)	d. Urinals	30	5
(24)	e. Toilets that disinfect and reuse flushing water many times, such as those found on jet aircraft	14	10
	f. Other, please specify _____	___	_____

(Use additional page if necessary)

Table A-VII (Cont'd)

No. of Responses

3. If, in your opinion, the installation of these devices would require increased costs, do you think homeowners would accept these costs? (Check one column for each device.)

		No Increase Required	Increase Required And Acceptable	Increase Required But Not Acceptable
(40)	a. Water saving faucets or shower heads	8	24	8
(39)	b. Direct flush valves for toilets	6	18	15
(31)	c. Toilets with separate flush cycles for urine and feces	2	14	15
(34)	d. Urinals	5	10	19
(29)	e. Toilets that disinfect and reuse flushing water many times, such as those found on jet aircraft	1	4	24
	f. Other, please specify_____	___	___	___

4. Would you recommend installation of any of these devices in private homes? (Please check)

		Yes	No
(38)	a. Water saving faucets or shower heads	33	5
(37)	b. Direct flush valves for toilets	18	19
(32)	c. Toilets with separate flush cycles for urine and feces	18	14
(34)	d. Urinals	8	26
(33)	e. Toilets that disinfect and reuse flushing water many times, such as those found on jet aircraft	7	26
	f. Other, please specify _____	___	___

5. Without considering cost, how would you rate public acceptance of these devices in single family homes? (Check one column for each device.)

		Favorable	Neutral	Opposed
(40)	a. Water saving faucets or shower heads	27	9	4
(42)	b. Direct flush valves for toilets	12	13	17
(38)	c. Toilets with separate flush cycles for urine and feces	13	16	9
(38)	d. Urinals	8	9	21

Table A-VII. (Cont'd)

No. of Responses		Favorable	Neutral	Opposed
(36)	e. Toilets that disinfect and reuse flushing water many times, such as those found on jet aircraft	5	10	21
	f. Other, please specify _____	___	___	___

6 Additional *comments or suggestions:*

Table A-VIII. Results of the Survey of Architects and Engineers

No. of Responses

(29) 1. Please indicate your major design interest:

housing	single family	apartments and
11 developments	7 homes	29 commercial buildings

(29) 2. Various devices designed to minimize water consumption and waste water volume (e.g., water saving faucets and shower heads, direct flush toilet valves, home urinals) are now commercially available. In your present designs for private and development housing do you ever specify the use of such devices? 9 yes 20 no

If answer is yes, please specify _____

3. Would you object to specifying any of the following water saving devices:

		Would Object	Would Not Object
(29)	a. Water saving faucets or shower heads	3	27
(28)	b. Direct flush toilet valves	6	22
(29)	c. Toilets with separate flush cycles for urine and feces	3	26
(26)	d. Home urinals	6	20
(28)	e. Toilets that disinfect and reuse flush water many times such as those found on the planes of major airlines	9	19

f. Other, please specify _____

(21) 4. Approximately what cost do you usually figure for waste disposal systems (not including internal plumbing) for homes that will not be connected to a city sewer system? average $1100; Range $500 to 2000.

5. What cost do you usually figure for connecting to the municipal sewer system (not including internal plumbing)? average $325; Range $25 to 900.

Table A-VIII. (Cont'd)

No. of Responses		Initial Cost	Annual Operating Cost
	6. What maximum cost for either a private or community waste disposal system do you think would be acceptable to a home buyer?		
(14)	In homes valued at less than $15, 000	$410	$45
(14)	In homes valued at $15, 000 to $29, 999	645	65
(13)	In homes valued at $30, 000 and up	900	75

(28) 7. In your designs would you find acceptable the reuse of treated waste water from bathing and laundering for toilet flushing or for lawn and garden irrigation? 24 yes 4 no

Please comment.

(25) 8. In your designs have you considered replacing septic tanks with individual household aerated treatment units? 5 yes 25 no

Please comment.

(16) 9. In housing developments of more than twenty-five homes do you usually specify community sewers and sewage treatment? 9 yes 7 no

Please comment.

Table A-VIII. (Cont'd)

No. of Responses		Most Others Would Object	Most Others Would Not Object
	10. Do you think that others in your profession would object to the following proposals?		
(28)	Specification of water saving plumbing devices	0	28
(23)	Specification of aerobic treatment systems	1	22
(25)	Specification of water reuse systems	2	23

11. What leeway does the plumbing contractor have in selecting substitutes for the systems specified in the contract?

12. Additional comments or suggestions:

Table A-IX. Results of the Survey of Plumbing Equipment Manufacturers

No. of Responses		Yes	No
	1. Does your company manufacture any of the following water saving devices at the present time? (please check)		
(8)	a. Water saving faucets or shower heads	5	3
(6)	b. Direct flush toilet valves	2	4
(6)	c. Toilets with separate flush cycles for urine and feces	0	6
(7)	d. Home urinals	1	6
	e. Other, please specify _____	—	—
	2. Do you anticipate an increased demand from homeowners and contractors for any of these devices in the near future? (please check)		
(8)	a. Water saving faucets or shower heads	3	5
(6)	b. Direct flush toilet valves	1	5
(7)	c. Toilets with separate flush cycles for urine and feces	1	6
(7)	d. Home urinals	2	5
	e. Other, please specify _____	—	—
	Comments:		
	3. If you are not now manufacturing any of these devices, do you have plans to manufacture any of them in the near future? (please check)		
(6)	a. Water saving faucets or shower heads	1	5
(5)	b. Direct flush toilet valves	1	4
(6)	c. Toilets with separate flush cycles for urine and feces	1	5
(6)	d. Home urinals	0	6
	e. Other, please specify _____	—	—

Table A-IX. (Cont'd)

No. of Responses		Yes	No
	4. Would you begin manufacturing any of these devices if increased water rates, sewage rates, or fuel rates for water heating made water conservation more attractive? (please check)		
(5)	a. Water saving faucets or shower heads	1	4
(5)	b. Direct flush toilet valves	0	5
(7)	c. Toilets with separate flush cycles for urine and feces	1	6
(7)	d. Home urinals	1	6
	e. Other, please specify _____		

	5. Please estimate selling cost of these devices if manufactured on a mass production basis. Again, it is stressed that only estimates are asked for and that these figures will be used only to approximate a total for system cost.	
(5)	a. Water saving faucets or shower heads	$10-20; $18; 50-80% more; 10% more; 30% more
(3)	b. Direct flush toilet valves	$8; $25; 20% more
(3)	c. Toilets with separate flush cycles for urine and feces	$88, $60, 50% more
(3)	d. Home urinals	$40, $40, 10% less
	e. Other, please specify _____	

		Less Expensive	More Expensive	No Significant Change
	6. How would these costs compare with the present retail cost of the systems now used?			
(6)	a. Water saving faucets or shower heads	0	3	3
(5)	b. Direct flush toilet valves	0	4	1
(5)	c. Toilets with separate flush cycles for urine and feces	0	5	0
(5)	d. Home urinals	2	0	3
	e. Other, please specify			

Table A-IX. (Cont'd)

No. of Responses		Yes	No
	7. Do you think these devices would be more difficult for plumbers to install than conventional hardware?		
(8)	a. Water saving faucets or shower heads	0	8
(6)	b. Direct flush toilet valves	0	6
(6)	c. Toilets with separate flush cycles for urine and feces	2	4
(6)	d. Home urinals	0	6
	e. Other, please specify _____		
	Comments:		

8. How would you rate public acceptance of these devices in private homes.

		Favorable	Neutral	Opposed
(8)	a. Water saving faucets or shower heads	4	2	2
(7)	b. Direct flush toilet valves	3	2	2
(7)	c. Toilets with separate flush cycles for urine and feces	2	1	4
(7)	d. Home urinals	3	0	4
	e. Other, please specify			

9. Additional comments or suggestions:

☆ U. S. GOVERNMENT PRINTING OFFICE : 1970 O - 405-432