United States
Environmental Protection
Agency

Office of Water
WH-552
Washington, DC 20460

July 1986

Water

EPA

Low BTU Gasifier Wastewater

Technical Support Document

LOW-BTU GASIFICATION WASTEWATER

TECHNICAL SUPPORT DOCUMENT

Lee M. Thomas
Administrator

Lawrence J. Jensen
Assistant Administrator
for the Office of Water

William Whittington
Director for the
Office of Water Regulations and Standards

Deveraux Barnes
Acting Director
Industrial Technology Division

William Telliard
Energy and Mining Branch

July 1986

U.S. Environmental Protection Agency
Washington, D.C. 20460

DISCLAIMER

This Technical Support Document was primarily based on the EPA Office of Water sampling and analysis program. No proprietary or confidential data have been used in the preparation of this document. Although this document addresses various wastewater treatment technologies, no process developer or process licensee was involved in the development of this manual. Mention of trade names or commercial products does not constitute endorsement or recommendation for use.

FOREWORD

This Technical Support Document is an assimilation of process and effluent data on the low-Btu coal gasificatin industry that were collected and analyzed by the EPA from 1979 to 1981. This document presents the data in summarized form for the use of permit writers, developers, and other interested parties. Examples of applicable wastewater pollution control technologies are also presented, both as individual process units and as integrated control systems. None of the examples are intended to convey an Agency endorsement or recommendation but rather are presented for informational purposes. The selection of control technologies for application to specific plants is the exclusive function of the designers and permitters who have the flexibility to utilize the lowest cost and/or most effective approaches. It is hoped that the readers will be able to relate their waste streams to those presented in this document to enable them to better understand the extent to which various technologies may control specific waste streams and utilize the information in making control technology selections for their specific needs.

The reader should be aware that this document contains no legally binding requirements or guidance and that nothing contained in this document relieves a facility from compliance with existing or future environmental regulations or permit requirements.

TABLE OF CONTENTS

	Page
Disclaimer	ii
Foreword	iii
List of Figures	vi
List of Tables	viii
Section 1 - Introduction	1
1.1 General	1
1.2 Technology Overview	2
1.3 Regulatory Background	4
1.4 Industry Overview	7
1.5 Data Collection Methodology	7
1.6 Document Organization	8
Section 2 - Industry Profile	9
2.1 Process Description and Definition	9
2.2 Process History	11
2.3 Industry Status	12
2.4 Coal Preparation	12
2.5 Gasification	12
2.6 Gas Purification	21
2.7 Commercially Available Technologies	23
2.8 General Process Chemistry	26
2.9 Product	29
2.10 Uses	29
Section 3 - Sampling and Analysis Program	32
3.1 Purpose	32
3.2 Scope	32
3.3 Site Selection Criteria	33
3.4 Plants Sampled	35
3.5 Pollutants Analyzed	35
3.6 Sampling Episodes	45
Section 4 - Wastewater Characterization	48
4.1 General	48
4.2 Gas Quench Water	48
4.3 Ash Sluice Water	62
4.4 Acid Gas Removal	73
Section 5 - Treatment Technology	74
5.1 Scope of the EPA Treatability Study	74
5.2 The EPA Treatability Study Site	75
5.3 Pilot Plant Description	75
5.4 Sampling and Analysis	81
5.5 Results	84

TABLE OF CONTENTS (Continued)

	Page
Section 5 - Treatment Technology (Continued)	
5.6 Problems Encountered	88
5.7 Treatability Study Conclusions	90
5.8 Other Studies	90
Section 6 - Conclusions	99
Bibliography	100
Appendix A - Descriptions of Plants SAmpled and Summaries of SAmpling Data	A-1
Appendix B - Sections 4 and 6 of Low-Btu Gasification Generic Sampling Program for Multimedia Development of Regulatory Support Data . .	B-1

LIST OF FIGURES

Figure		Page
2-1	Basic Features of Low-Btu Gasification Processes	10
2-2	Four Basic Designs of Coal Gasifiers	18
2-3	Pyrolysis of Coal	27
3-1	Liquid Waste Streams Generated at a Typical Low-Btu Gasification Facility	36
5-1	Schematic Flow Diagram	77
5-2	Roughing Section Filter	78
5-3	Dephenolizer	79
5-4	Ammonia Still	80
5-5	Activated Sludge	82
5-6	Effluent Polishing	83
5-7	Performance of Pretreatment Units	85
5-8	Percent Reduction in BOD, TOC & COD Across Bio-Units @ 50% Gasifier Dilution	86
5-9	Block Diagram of GFETC Wastewater Sludge Generation System (Phase 1)	91
5-10	GFETC Gasifier Wastewater Pretreatment Train (Phase 2)	92

LIST OF TABLES

Table		Page
1-1	The Clean Water Act Amendments of 1977	6
2-1	U.S. Commercial and Pilot Low-Btu Gasification Facilities	13
2-2	Typical Composition of Low-Btu Gas from Bituminous Coals and Lignite	30
2-3	Past Users of Gas Produced	31
3-1	Operating Characteristics of Gasifiers Sampled	37
3-2	Gas Purification Processes of Gasifiers Sampled	38
3-3	Pollutant Parameters to be Analyzed in Wastewater Samples	40
3-4	Annotated Outline for Sampling Plan	46
4-1	Priority Organic Pollutants in Gas Quench Wastewater (ug/l) Found in More Than One Sample	50
4-2	Priority Organic Pollutants Detected Only Once in Gas Quench Water	51
4-3	Priority Organic Pollutants Not Detected in Gas Quench Water	52
4-4	Synfuels Nonconventional Organic Pollutants and Appendix C Compounds in Gas Quench Water (ug/l)	53
4-5	Priority Metals in Low-Btu Gas Quench Wastewater (ug/l)	54
4-6	Conventional Pollutants in Gas Quench Wastewater (mg/l)	55
4-7	Nonconventional Pollutants in Low-Btu Gas Quench Wastewater (mg/l)	57
4-8	Water Quality Parameters for Three Coal Conversion Aqueous Process Wastewaters	59
4-9	Comparison of High Pressure and Low Pressure Pollution Levels	61

LIST OF TABLES (Continued)

Table		Page
4-10	Priority Organic Pollutants Detected in the Ash Sluice Water (ug/l)	63
4-11	Priority Metals Detected in the Ash Sluice Water (ug/l)	64
4-12	Nonconventional Organic and Appendix C Pollutants Detected in the Ash Sluice Water (ug/l)	65
4-13	Nonconventional Pollutants Detected in the Ash Sluice Water (mg/l)	66
4-14	Conventional Pollutants Detected in the Ash Sluice Water (mg/l)	67
4-15	Priority Organic Pollutants Detected in the Cyclone Quench Water (ug/l)	68
4-16	Priority Metals Detected in the Cyclone Quench Water (ug/l)	69
4-17	Nonconventional Organic and Appendix C Pollutants Detected in the Cyclone Quench Water (ug/l)	70
4-18	Conventional Pollutants Detected in the Cyclone Quench Water (mg/l)	71
4-19	Nonconventional Pollutants Detected in the Cyclone Quench Water (mg/l)	72
5-1	Effect of Overall Treatment System	88

SECTION 1

INTRODUCTION

1.1 GENERAL

The purpose of this document is to present the process and effluent data that were collected and analyzed by the EPA from 1979 to 1981 on the low-Btu gasification industry. It is hoped that this information will be useful to permit writers, industry, and the general public when determining appropriate wastewater pollution control systems for the low-Btu gasification industry. Information is provided on the status of the low-Btu gasification industry, wastewater characterization, production process descriptions, and wastewater treatment technologies.

The term low-Btu gasification in this document concerns air blown gasifiers using coal as the primary feedstock and producing a gas with a heating value of approximately 150 Btu/SCF. In the United States, gasification of coal originated in 1816, many years before natural gas production was com- mercialized. The gas product was used principally as a fuel source for space heating and for streetlights. Gasification was in widespread use by the turn of the century. By the 1930's, almost 12 million tons per year of coal were gasified in some 14,000 producer gas units. However, as World War II opened, synthetic gas production was diminishing rapidly because of the increased use of natural gas. Some gasifiers continued to operate after World War II; all of these are small and located in northern Appalachia.

The energy shortages and imbalances of the 1970's brought a renewed interest in domestic energy production. Government agencies, trade associations, and private industry were actively pursuing synthetic fuels technology development. Coal gasification in foreign countries has been developed also. In fact, at least 95 commercial coal gasification plants were operating in over 27 different countries as of 1981.

In 1979 the Environmental Protection Agency (EPA) began gathering data to determine the need for environmental regulations on the synthetic fuels industries. In January 1981, the Federal government cut back on financial assistance for these industries. This action, along with a more stable supply of petroleum resources, resulted in a steep cutback of synthetic fuel research and production. In early 1982, EPA decided not to issue formal

regulations on pollutant discharges in the low-Btu gasification industry.

Thus, this document presents the data obtained by EPA on the low-Btu industry for informational purposes. In no way does it contain legally binding requirements or regulatory standards, nor does it include preferences for process technologies or controls. Nothing within this document binds a facility to accept the example control technology(ies) nor relieves a facility from compliance with existing or future environmental regulations or permits.

1.2 TECHNOLOGY OVERVIEW

1.2.1 GENERAL DESCRIPTION

Low-Btu gas production involves the reaction of coal with air and steam at high temperatures to produce a gaseous product that can be used as a fuel source. The temperature of the gasifier is maintained by partial combustion of the coal with air. Depending upon the pressure, temperature, air/coal ratio, coal rank, and the reactor configuration, the resulting gas will have varying amounts of hydrogen (H_2), carbon monoxide (CO), carbon dioxide (CO_2), methane (CH_4), water (H_2O), and nitrogen (N_2) and the heating value will range from 100 to 200 Btu/std ft^3. The presence of high levels of nitrogen, introduced as a component in the air and the presence of CO_2, makes the gas from air fired processes low-Btu gas.

The major processing steps required for low-Btu gas production are:

- Coal Preparation: crushing and/or grinding, drying, and size classification.
- Gasification: reaction of the coal carbon with steam and oxygen to form H_2, CO, CO_2, and CH_4.
- Gas Purification: quench and clean up involving cooling and removal of particulates, oils, and tars. In some cases, removal of hydrogen sulfide (H_2S), carbonyl sulfide (COS), and other sulfur compounds from the gas.

In addition to these operations, supporting services and utilities are required. These include steam generation, cooling water supplies, water and wastewater treatment, solid waste disposal, and sulfur recovery (conversion of H_2S to sulfur for sale or disposal).

1.2.2 COAL PREPARATION

Run-of-mine coal is cleaned to remove unwanted constituents by screening or other separation processes. The coal is crushed or ground to meet the requirements of the gasifier.

1.2.3 GASIFICATION

The gasification process is relatively simple. Coal falls by gravity feed from an overhead storage bunker into the upright cylindrical gasifier. There it reacts with roughly one-sixth of the air required for complete combustion. This partial combustion generates heat and converts the solid coal to a gaseous stream rich in carbon monoxide and hydrogen. Steam is added to the air entering the gasifier to control the temperature of this partial combustion process and to produce a product with greater quantities of hydrogen.

Because the air and steam are fed to the gasifier countercurrent to the coal, conversion of the coal is essentially complete, and thermal efficiencies of the process can exceed 90 percent.

The product streams from the gasifier consist of a solid ash for disposal and a product gas having a higher heating value of about 150 Btu/cubic foot. The ash is removed from the bottom of the gasifier and is transported for disposal. Some applications can use the hot product gas directly from the gasifier. However, applications requiring gas compression and distribution require further gas treatment to remove condensible hydrocarbons derived from the volatile matter in the original coal.

1.2.4 GAS PURIFICATION

The gas stream leaving a gasifier can contain components that make it unsuitable as a final product or for further processing. These undesirable constituents include water vapor, ammonia, oil, tar, and particules as well as hydrogen sulfide. Depending on the concentrations of these constituents, product gas specifications, and/or in-process constraints, any or all of these constituents may be removed from the gasifier exit gas. A typical process scheme consists of particulate removal and quenching.

Particulate removal is generally achieved using some combination of cyclones, wet scrubbers, or electrostatic precipitators. Cyclones placed at the end of the gasifier can remove particulates in the hot exit gas from the reactor. These units are commonly operated at high temperature and/or high pressure conditions.

Gas quenching is the first cleanup step after particulate removal. This process removes many of the volatiles, such as tars, oils, and phenolics, that are released from the coal. The gas is cooled by direct contact or indirect cooling with water. The condensed wastewater stream (called gas quench liquor or process condensate) contains toxic pollutants at high levels relative to other wastewater streams from these facilities. Quenching also removes particulates, and a specific particulate removal set is sometimes omitted where quenching is used.

1.3 REGULATORY BACKGROUND

1.3.1 WASTEWATER REGULATIONS

The Federal Water Pollution Control Act of 1972 established a comprehensive program to "restore and maintain the chemical, physical, and biological integrity of the Nation's waters" [Section 101(a)]. By 1 July 1977, existing point source industrial dischargers were required to achieve "effluent limitations requiring the application of the best practicable control technology currently available" (BPT) [Section 301(b)(A)]. Further, by 1 July 1983, these dischargers were required to achieve "effluent limitations requiring the application of the best available technology economically achievable (BAT) which will result in reasonable further progress toward the national goal of eliminating the discharge of all pollutants" [Section 301(b)(2) (A)]. New industrial direct dischargers were required to comply with Section 306 new source performance standards (NSPS), based on best available demonstrated technology (BAD), and new and existing dischargers to publicly owned treatment works (POTWs) were subject to pretreatment standards under Sections 307(b) and (c) of the Act. While the requirements for direct dischargers were to be incorporated into National Pollution Discharge Elimination System (NPDES) permits issued under Secion 402 of the Act, pretreatment standards were made enforceable directly against dischargers to POTWs (indirect dischargers).

Although Section 402(a)(1) of the 1972 Act authorized the setting of requirements for first dischargers on a case-by-case basis, Congress intended that, for the most part, control requirements would be based on regulations promulgated by the Administrator of the EPA. Section 304(b) of the Act required the Administrator to promulgate regulations providing guidelines for effluent limitations setting forth the degree of effluent reduction attainable through the application of BPT and BAT. Moreover, Sections 304(c) and 306 of the Act required promulgation of regulations for NSPS, and Sections 304(f), 307(b), and 307(c) required promulgation of regulations for pretreatment standards. In addition to these regulations for designated industry

categories, Section 307(a) of the Act required the Administrator to promulgate effluent standards applicable to all dischargers of toxic pollutants. Finally, Section 501(a) of the Act authorized the Administrator to prescribe any additional regulations "necessary to carry out his functions" under the Act.

On 27 December 1977, the President signed into law the Clean Water Act of 1977 (P.L. 95-217). Although this law makes several important changes in the Federal water pollution control program, most significantly it incorporates several of the basic elements of the Settlement Agreement program for toxic pollution control into the Act. Sections 301(b) (2)(A) and 301(b)(2)(C) of the Act now require the achievement, by 1 July 1984, of effluent limitations requiring application of BAT for toxic pollutants which Congress declared toxic under Section 307(a) of the Act. Likewise, the EPA's programs for new source performance standards and pretreatment standards are now aimed principally at toxic pollutant controls. Section 306(b) includes a list of industrial categories for which these performance standards should be developed. Moreover, to strengthen the toxics control program, Congress added Section 304(e) to the Act, authorizing the Administrator to prescribe "best management practices" (BMPs) to prevent the release of toxic and hazardous pollutants from plant site runoff, spillage or leaks, sludge or waste disposal, and drainage from raw material storage associated with, or ancillary to, the manufacturing or treatment process.

In keeping with its emphasis on toxic pollutants, the Clean Water Act of 1977 also revised the control program for nontoxic pollutants. Instead of BAT for "conventional" pollutants identified under Section 304 (a)(4) (including biochemical oxygen demand, total suspended solids, fecal coliform, pH, and oil and grease), the new Section 301(b)(2)(3) requires achievement, by 1 July 1984, of "effluent limitations requiring the application of the best conventional pollutent control technology" (BCT). The factors considered in assessing BCT for an industry include the costs of attaining a reduction in effluents and the effluent reduction benefits derived compared to the costs and effluent reduction benefits from the discharge of publicly owned treatment works [Section 304(b)(4)(B)]. For nontoxic, nonconventional pollutants, Sections 301(b)(2)(A) and (b)(2)(F) require achievement of BAT effluent limitations within three years after their establishment or 1 July 1984, whichever is later, but not later than 1 July 1987. Table 1-1 summarizes these levels of technologies, sources affected, and deadlines for promulgation and compliance.

BCT, BAT, and NSPS have not been developed for the low-Btu gasification industry. This industrial category was not listed in Section 306(b) of the Clean Water Act. Yet in 1979, when it appeared that the industry was growing at a rate requiring

Table 1-1

THE CLEAN WATER ACT AMENDMENTS OF 1977

Level of Technology	Section of Act	Sources Affected	Deadline for EPA for Promulgation	Deadline for Operator Compliance
BPT	301, 304	Existing sources	1 yr. after passage	1 July 1977
BAT	301, 304	Existing sources	1 yr. after passage	1 July 1983
BCT	301, 304	Existing sources	1 yr. after passage	1 July 1984
BADT	306	New sources	1-1/3 yrs. after passage	Effective upon promulgation
PSES	307	Existing sources discharging to POTW	270 days after passage	No later than 3 years after promulgation
PSNS	307	New sources discharging to POTW	1-1/3 yrs. after passage	Effective upon promulgation

regulatory control, the Agency initiated a regulation development program. However, by 1981, when projected growth of the industry substantially declined, the Agency decided not to develop regulations. Thus, this document simply provides information on EPA's data collection effort that permit writers and industrial developers can use (among other sources) in their determination of appropriate pollution control measures.

1.4 INDUSTRY OVERVIEW

Most commercial low-Btu gas facilities produce gas for consumption on the site. Typically, the gas is used in process heating where solid fuel is not suitable, as in the case of brick kilns. The low-Btu gas industry over the period from 1975 to 1985 has consisted of 32 facilities: 16 commercial and 16 pilot plants or process development units. Many of the commercial facilities employ fixed bed, atmospheric pressure gasifiers.

1.5 DATA COLLECTION METHODOLOGY

Wastewater characterization data for the low-Btu gasification industry were primarily obtained from seven sampling visits at four operating low-Btu gasifiers (one plant was sampled twice, and another three times). Individual wastewater streams produced at these facilities were sampled in order to determine raw wastewater pollutant loadings.

The data were analyzed to determine concentrations of priority pollutants, Appendix C compounds, nonconventional and conventional pollutants, and a number of organic pollutants specifically for the synfuels industry.

Following wastewater characterization, methods to treat the wastewater were investigated. This investigation consisted of the following procedures:

- A comparison of raw wastewater characteristics of low-Btu gasification to those of other analogous industries (such as petroleum refining and coke plants) to determine applicable wastewater treatment technologies.

- An on-site pilot scale wastewater treatability study at a commercially operating low-Btu gasifier.

- A review of other studies and literature pertaining to wastewater treatability for gasification processes.

1.6 DOCUMENT ORGANIZATION

This Technical Support Document is presented in six sections and two appendices. Following this introductory section are:

Section 2 - Industry Profile - The industry profile contains information on the history of low-Btu gas production, process descriptions, and developmental status of the low-Btu gasification industry.

Section 3 - Sampling and Analysis Program - Selection of plants for sampling and selection of parameters for analysis is reviewed in Section 3.

Section 4 - Waste Stream Characterization - The data collected on the levels of pollutants in wastewaters from low-Btu gas facilities is summarized and evaluated. Included are the test results from seven EPA sampling programs. Also included is a discussion of the major sources of effluents.

Section 5 - Wastewater Treatment and Control Technology - This section discusses applicable in-plant and end-of-pipe technologies that can be used to reduce or eliminate the pollutants of concern. The achievable effluent pollutant reductions are discussed using treatability information from a pilot-plant treatability study, and information collected from available literature.

Section 6 - Conclusions - A brief discussion of the information presented in this document.

References

Appendix A - Plant and Data Summaries - This appendix describes the plants sampled, discusses the sampling locations and procedures, and gives the results of sample analysis.

Appendix B - Sampling and Analytical Methods - This appendix gives information on methods used to provide quality control on sampling and sample analysis.

SECTION 2

INDUSTRY PROFILE

2.1 PROCESS DESCRIPTION AND DEFINITION

The processes considered in this report are for the production of low-Btu gas from coal or other solid fuels. Coal gasification is the process whereby coal, in the presence of steam and air or oxygen, is heated and undergoes a series of reactions (gasification followed by devolatization of volatile matter) to produce a gas consisting primarily of carbon monoxide and hydrogen. For the purpose of this report, low-Btu gasification uses air with steam in the reaction to produce a product gas that usually ranges from 100 to 200 Btu/scf. Medium- to high-Btu gases (300-1000 Btu/scf) are produced using oxygen instead of air.

Depending upon the pressure, temperature, use of air or oxygen, coal rank, and the reactor configuration, the resulting gas will have varying amounts of hydrogen (H_2), carbon monoxide (CO), carbon dioxide (CO_2), methane (CH_4), water (H_2O) and nitrogen (N_2) and the heating value will range from 100 to 200 Btu/std ft^3. In practice the composition of synthetic gas from any process would vary over some range as a result of the factors previously mentioned. The presence of high levels of nitrogen, introduced as a component in the air and the presence of CO_2, makes the gas from air fired processes low-Btu gas.

The gaseous product from the gasifier has a higher hydrogen to carbon ratio than that in the coal itself, and to achieve this, hydrogen must be added. Hydrogen is supplied by steam. Different methods of contacting solid coal with the gaseous streams (or gasifier bed type) are used.

A general schematic is shown in Figure 2-1. Each process (both commercially available and under development) has specific variations that affect the composition and heating value of the product, and the applicability of the process to individual uses. Coal rank and preparation requirements, supporting services and utilities, and equipment capacities are also affected. Several low- and medium-Btu processes can be used to produce high-Btu gas by using oxygen instead of air and including additional operations.

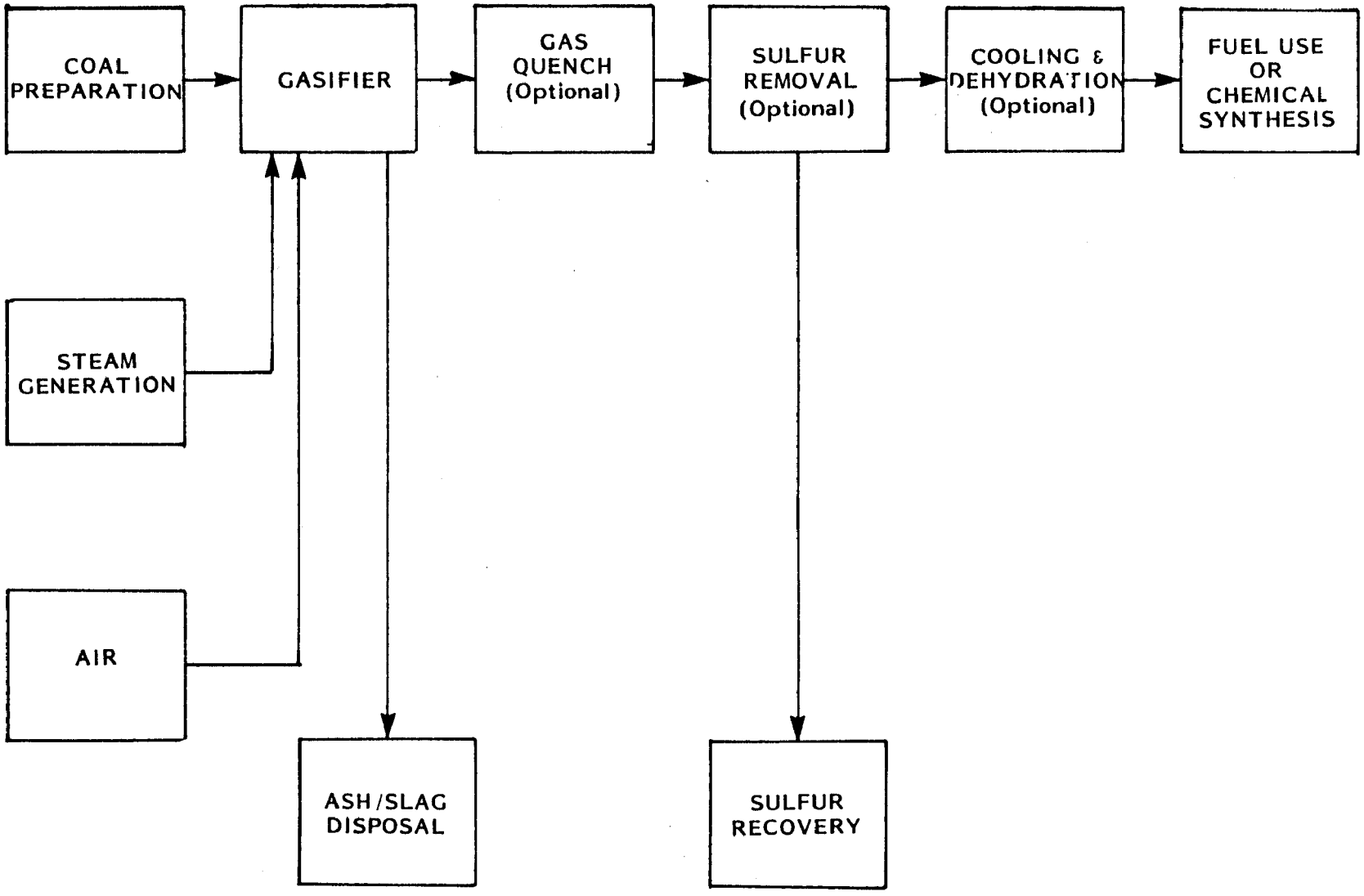

Figure 2-1. Basic Features of Low-Btu Gasification Processes

The major processing steps required for low-Btu gas production are:

- Coal Preparation: crushing and/or grinding, drying, and size classification

- Gasification: reaction of the coal carbon with steam and oxygen to form H_2, CO, CO_2, and methane (CH_4)

- Gas Purification: quench and clean up involving cooling and removal of particulates, oils, and tars. In some cases, removal of hydrogen sulfide (H_2S), carbonyl sulfide (COS), and other sulfur compounds from the gas.

In addition to these operations, supporting services and utilities are required. These include steam generation, cooling water supplies, water and wastewater treatment, solid waste disposal, and sulfur recovery (conversion of H_2S to sulfur for sale or disposal).

EPA's data collection program focused on the actual gasification process and the wastewaters produced from it. Auxiliary processes such as coal handling, coal preparation, steam generation, and cooling tower operation are processes used common to other industries as well and information on them can be obtained from other sources.

2.2 PROCESS HISTORY

In the United States, gasification of coal originated in 1816, many years before natural gas production was commercialized. Principal uses of the gas product were as fuel sources for space heating and for streetlights. Gasification was in widespread use by the turn of the century. By the 1930's, almost 12 million tons per year of coal were gasified in some 14,000 producer gas units. However, as World War II opened, synthetic gas production diminished rapidly due to increased use of natural gas. Some gasifiers continued to operate after World War II, although all of these are small and located in one geographic region (northern Appalachia).

The energy shortages and imbalances of the 1970's brought a renewed interest in domestic energy production. Government agencies, trade associations, and private industry are pursuing synthetic fuels technology development but commercialization has been limited. In contrast to fluctuating development of the American synfuels industry, coal gasification in foreign countries has been consistently pursued. At least 95 commercial coal gasification plants are operating in over 27 different countries.

2.3 INDUSTRY STATUS

All commercial low-Btu gas facilities produce gas for consumption on the site. Typically, the gas is used in process heating where solid fuel is not suitable, such as in the case of brick kilns. The low-Btu gas industry over the period from 1975 to 1985 has consisted of 32 facilities--16 commercial and 16 pilot/development units. At the end of 1985 the industry was canvassed.* In commercial facilities, 3 were in operation, 9 shut down, and 4 in stand-by condition. In pilot/development facilities, 4 were in operation, 7 shut down, 3 dismantled, and 2 in stand-by condition. Table 2-1 gives a listing of units as developed in 1979 and updated as of early 1986. There are currently no units known to be under construction or in the planning stages. Many of the commercial facilities employ fixed bed, atmospheric pressure gasifiers.

2.4 COAL PREPARATION

Run-of-mine coal is washed using water and/or chemicals to remove unwanted constituents. This process also sizes the coal by crushing and grinding to meet user specifications of the gasifier.

2.5 GASIFICATION

This step is the principal focus of low-Btu gas production. Coal gasifiers can be classified according to:

- Bed Type
- Temperature
- Pressure
- Number of stages
- Oxidant
- Ash removal process

2.5.1 BED TYPE

Coal feed is the principal characteristic used to classify gasifiers. Gasifiers are categorized according to this parameter as fixed-bed, fluidized bed, entrained bed, or molten media. These are depicted in Figure 2-2. The typical fixed-bed reactor

---

*Data collection on this industry was completed in 1981. However, prior to publication of this document in early 1986, an update of the industry status was performed and included in this section. Based upon this new information, a reevaluation of the 1981 data was not deemed necessary.

Table 2-1

U.S. Commercial and Pilot Low-Btu Gasification Facilities

Technology	Funding/Owner	Location	Type of Coal	Size	Status of Technology	Gas Cleanup	Status/ Age
Westinghouse	DOE; Westinghouse Corporation	Waltz Mill, PA	Illinois #6	15 TPD 1 MMSCF/hr	PDU	o Cyclone o Scrubber	o Operating o Start-up 1975
Molten Salt Process	Atomics International-Rockwell	Santa Susana, CA	Illinois #6	24 TPD	PDU		o Start-up 1978 o Dismantled
Slagging Fixed Bed Gasifier	DOE; Grand Forks Energy Technology Center; Stearns-Rogers, Inc.	Grand Forks, ND	Lignite		PDU	o Wash Cooler	o Not operating
Bell Aerospace High Mass Flux	Bell Aerospace	Buffalo, NY			PDU		o Not operating
BCR	DOE, BCRI	Monroeville, PA	o Bituminous, o Subbituminous o Illinois #6	1.2 TPD	PDU		o Start-up Oct. 1977 o Operation through Oct. 1980 o Not operating
Kilngas	Allis-Chalmers; State of IL	Wood River, IL (East	Bituminous	820 TPD (460-575 MM SCF/D design)	Demonstration Plant	o Quench o Sulfur Removal (Stretford)	o Operational
Combustion Engineering	Combustion Engineering	Lake Charles, LA		120 TPD Coal	Demonstration Plant		o Not operating

Table 2-1 (Continued)

U.S. Commercial and Pilot Low-Btu Gasification Facilities

Technology	Funding/Owner	Location	Type of Coal	Size	Status of Technology	Gas Cleanup	Status/ Age
In-Situ Gasification	DOE - Laramie Energy Technology Center	Hanna, WY	Low-Rank Coal		Pilot		Field Tests since 1972 Last test 1983
Riley Morgan	Riley Stoker Co.	Worchester, MA	Bituminous Lignite	(1 unit)	Demonstration Plant	o Cyclone	o Dismantled
Advanced Fixed Bed Coal Gasifier with Air Oxidant	General Electric and DOE	Schenectady, NY	Illinois #6	2.8 MMSCF/D 25 TPD Coal	Pilot		o Test runs began in 1976 o Periodic Operation
Kilngas	Allis Chalmers State of IL, Gilbert/Commonwealth Associates, Inc., and numerous facilities	Oak Creek, WI	o Illinois No. 6 o Pittsburgh	6.9 MMSCF/D 60 TPD Coal	Pilot		o In Operation since 1975 o Shut down 1983
Fast Fluidized Bed Gasification	DOE Hydrocarbon Research, Inc.	Lawrence Township, NJ	Bituminous Anthracite	0.6 MMSCF/D 9 TPD Coal	Pilot		o Start-up in June 1981 o Shut down 1983

Table 2-1 (Continued)

U.S. Commercial and Pilot Low-Btu Gasification Facilities

Technology	Funding/Owner	Location	Type of Coal	Size	Status of Technology	Gas Cleanup	Status/ Age
Chemically Active Fluid Bed (Exxon)	EPA-funded Central and Southwest Corporation	San Benito, TX	Lignite	33 MSCF/D	Pilot		o Startup in Spring 1979 o Shut down
Combustion Engineering	Combustion Engineering, EPRI; DOE	Windsor, CT	Pittsburgh Seam Coal	120 TPD 0.6 MMSCF/hr	Pilot	o Cyclone o Quench o Sulfur Removal (Stretford)	o Start-up June 1978 Dismantled 1985
METC (Advanced Pressurized Wellman-Galusha)	Morgantown Energy Technology Center	Morgantown, WV	Subbituminous Bituminous		PDU	o Wash cooler o Sulfur removal (Stretford)	o Periodic Operation
Wellman-Galusha	Can-Do, Inc., DOE Funded	Hazelton, PA	Anthracite, Low Sulfur	(2 units) 50 TPD	Commercial	o Cyclone o Gas Quench	o Start-up 1981 o Operating
Wellman-Galusha	Howmet Aluminum Corporation	Lancaster, PA	Anthracite Low Sulfur	85 TPD	Commercial	o Cyclone	o Gasifier Installed Summer 1980 o Standby
Wellman-Galusha	Binghamton Brick Co.	Binghamton, NY	Anthracite Low Sulfur	(2 units)	Commercial	o Cyclone	o Not operating
Wilputte (Chapman)	Holston Army Ammunition Plant	Kingsport, TN	Bituminous, Low Sulfur	720 TPD (design)	Commercial (12 units)	o Cyclone o Gas Quench	o Operating o Start-up 1940

Table 2-1 (Continued)

U.S. Commercial and Pilot Low-Btu Gasification Facilities

Technology	Funding/Owner	Location	Type of Coal	Size	Status of Technology	Gas Cleanup	Status/ Age
Wellman Incandescent	Caterpillar Tractor, Inc.	York, PA	Bituminous	130 TPD	Commercial (2 units)	o Cyclone o ESP o Sulfur removal (Stretford)	o Start-up August 1979 o Shut down
Foster-Wheeler Stoic	University of Minnesota (50% DOE funding)	Duluth, MN	Bituminous, Low Sulfur (WY)	8.3 MMSCF/D 72 TPD	Commercial	o Cyclone o ESP	o Start-up Oct. 1978 o Standby
Foster-Wheeler Stoic	General Motors	Saginaw, MI	Various	3 TPD Coal	Demonstration Plant	o Cyclone o Quench	o Start-up 1979 o Shut down
Car-Mox Gasifier	Fike Chemicals	Nitro, VA		2.3 - 3.5 MMSCF/D 25 TPD Coal	Commercial Plant		o Start-up Sept. 1979 o Shut down
Wellman-Galusha	National Lime and Stone Co.	Carey, OH	Bituminous, Low Sulfur	24 TPD	Commercial (2 units)	o Cyclone	o Start-up in 1955 o Presently shutdown
Wellman-Galusha	Hazelton Brick Co., Webster Brick Co., Roanoke, VA	Hazelton, PA	Anthracite Low Sulfur	20 TPD	Commercial (4 units)	o Cyclone	o Start-up 1940's o Shut down
Wellman-Galusha	Olin Chemical New Jersey Zinc	Ashtabula, OH	Coke	170 TPD	Commercial (2 units)	o Cyclone	o Installed in 1963 o Standby

Table 2-1 (Continued)

U.S. Commercial and Pilot Low-Btu Gasification Facilities

Technology	Funding/Owner	Location	Type of Coal	Size	Status of Technology	Gas Cleanup	Status/ Age
Wellman-Galusha	Glen-Gery Corp.	Reading, PA	Anthracite Low Sulfur	3.65 MSCFD 24 TPD Coal	Commercial	o Cyclone	o Shut down
Wellman-Galusha	Glen-Gery Corp.	Shoemakersville, PA	Anthracite Low Sulfur	3.65 MSCFD 24 TPD Coal (per unit)	Commercial (2 units)	o Cyclone	o Operating
Wellman-Galusha	Glen-Gery Corp.	Watsontown, PA	Anthracite	7.3 MSCFD 48 TPD (per unit)	Commercial (2 units)	o Cyclone	o Shut down
Wellman-Galusha	Glen-Gery Brick Co.	New Oxford, PA	Anthracite Low Sulfur		Commercial	o Cyclone	o Shut down
Wellman-Galusha	50% Aerotherm Corp., 50% DOE - Operated by Glen-Gery Corp.	York, PA	Anthracite Low Sulfur	3.65 MSCFD 24 TPD (per unit)	Commercial (2 units)	o Cyclone	o Start-up Oct. 1977 o Shut down
Wellman-Galusha	Bureau of Mines DOE; American Natural Resources and 17 other industrial partners	Fort Snelling, MN	o Bituminous (KY) o Subbituminous (CO) o Lignite (MD)(TX) o Simplex briquettes	48 TPD	Commercial	o Cyclone o Temporary Gas Quench Unit o Electrostatic precipitation to be installed	o Standby

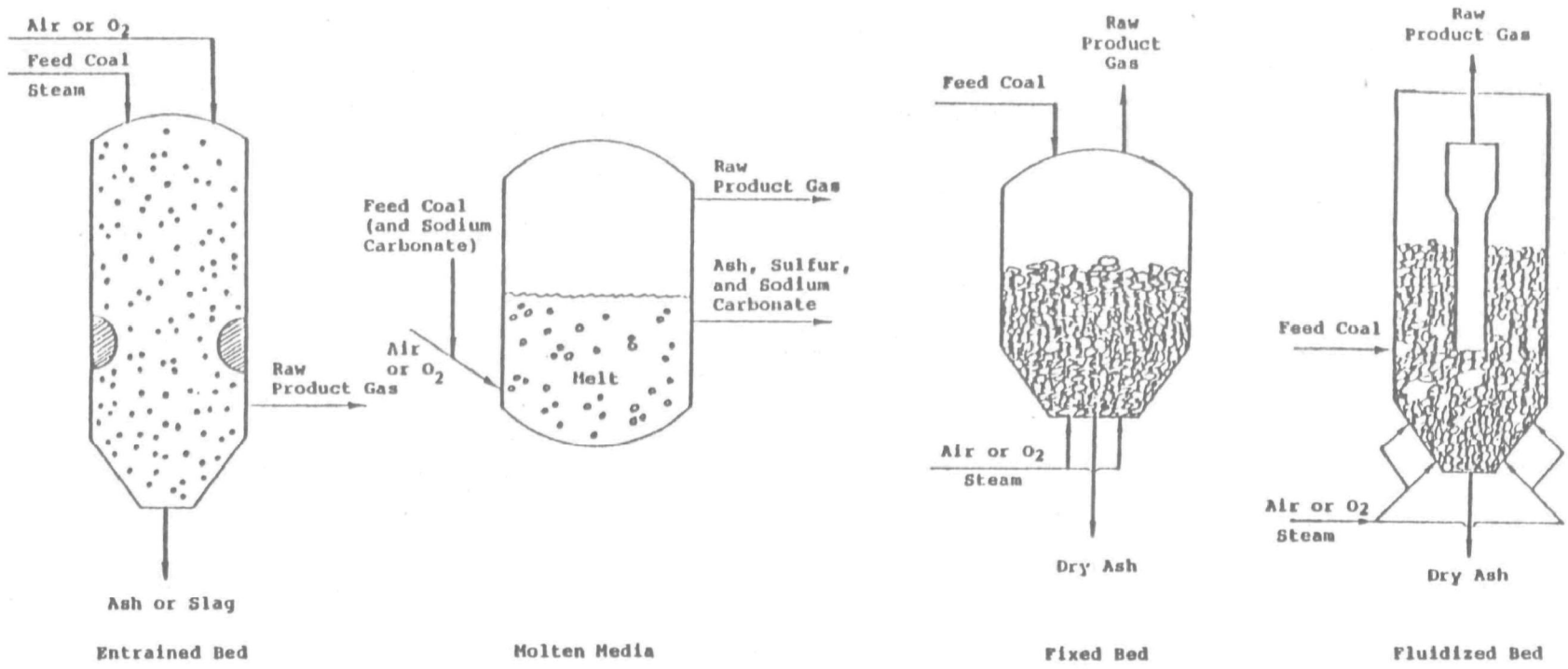

Figure 2-2

FOUR BASIC DESIGNS OF COAL GASIFIERS

feeds coal from the top of the gasifier where it contacts rising hot product gas. The lowest temperature of the gasifier is in this region. There a majority of the volatile matter is driven off (devolatilization). The volatile matter consists of aliphatic (straight or branched chain hydrocarbons), alicyclic (cyclic hydrocarbons), and aromatic compounds (cyclic hydrocarbons with at least one benzene ring). The devolatilized coal particles then descend into the gasification zone where reaction occurs with the steam to produce a mixture of gases containing primarily carbon monoxide and hydrogen. The third and lowest zone in a fixed-bed gasifier is the combustion zone, where the coal and oxygen react to produce heat for the gasification and devolatilization.

In a fluidized bed gasifier, coal is ground more finely prior to injection through nozzles usually located in the walls of the reactor. Gases flow upward in the bed, concurrent with the coal feed, maintaining a steady state suspension of the solids in a turbulent condition. Very rapid mass and heat transfer occur in the fluidized bed; therefore, little temperature variation occurs. The volatile matter is driven off but is broken down (reformed) into primarily carbon monoxide and hydrogen. Combustion occurs near the injection ports, and gasification occurs throughout the bed.

In an entrained bed gasifier, the coal particles travel through the reactor at roughly the same velocity as the gaseous reactants and products. Coal can be fed from under the gasifier or from the top. Because temperatures are much higher in this gasifier (3,200°F in the combustion zone), shorter reaction times are required. Thus, residence time is short in this reactor, and devolatilization and gasification occur rapidly, such that at the gasifier exhaust port, all reactions are complete and the gas exits at approximately 1,700°F.

In a molten media gasifier, crushed coal is blended with the molten medium (e.g., sodium carbonate) and introduced into a molten melt which acts as a heat source for the process. These gasifiers are generally operated at approximately 1,800°F and slightly elevated pressure.

2.5.2 TEMPERATURE

Fixed bed gasifiers have the lowest average temperature, entrained bed the highest, with fluidized beds and molten media in between. The temperature is an important factor in reaction rates, energy consumption, and ash removal techniques.

2.5.3 PRESSURE

Gasifiers can be operated at atmospheric or pressurized conditions. The operating pressure is an important factor in a product gas that is piped significant distances from the gasifier. Gaseous reaction rates are also a sensitive function of pressure. Any of the reactor designs can be operated at atmospheric pressure or greater.

2.5.4 NUMBER OF STAGES

In fixed bed reactors, the devolatilization zone and the gasification zone produce different gaseous products. Multiple stages can be utilized in a gasifier to withdraw these gases at different locations, thus reducing the cost of gas cleanup. The stages are all part of the same reactor vessel, but simply define multiple exhaust ports.

2.5.5 OXIDANT

Only air is used for oxidation in low-Btu gas production. Either air or oxygen can be injected into the gasifier to produce medium- or high-Btu gas. This reactant combusts with the coal to provide process heat for gasification. Because air is approximately 79 percent nitrogen, a product gas from an air blown gasifier will contain large quantities of nitrogen, consequently reducing the thermal content of the product gas. Oxygen injection permits a higher Btu content of the product gas than an air blown process. However, oxygen must be cryogenically separated from air for use in the gasifier; this is a significant contributor to plant capital and operating costs.

Air blown gasifiers produce a low-Btu gas containing a heating value of 100 to 200 Btu/stdft^3. Oxygen blow gasifiers produce a medium-Btu gas containing approximately 300 Btu/stdft^3 which can be upgraded by reactions called shift conversion and methanation to a high-Btu gas of approximately 1,000 Btu/stdft^3. This high-Btu gas is also called synthetic natural gas (SNG) or pipeline gas.

2.5.6 ASH REMOVAL MECHANISM

The temperature at which the ash fuses or becomes molten is referred to as the ash fusion temperature (this temperature, even for one type of coal, actually represents a melting range). For many coals, melting begins to occur betwen 1,800 to 1,900°F. Those gasifiers that operate at higher temperatures are called slagging gasifiers because of the removal of the molten slag from

the bottom of the reactor. Below this temperature, the gasifier is termed a dry-bottom (except in the case when a molten medium is used), and the ash is removed as a solid.

2.6 GAS PURIFICATION

2.6.1 GENERAL

The gas stream leaving a gasifier contains components that in some cases make it unsuitable as a final product or for further processing. These undesirable constituents include water vapor, ammonia, oil, tar, and particulates as well as hydrogen sulfide. Depending on the concentrations of these constituents, product gas specifications, and/or in-process constraints, any or all of these constituents may be removed from the gasifier exit gas.

A typical process scheme consists of particulate removal and quenching with acid gas removal added in some cases. Gas purification is what ultimately results in this industry's principal wastewater stream.

2.6.2 PARTICULATE REMOVAL

Product gas from the gasifier is first routed to a particulate removal device for removal of elutriated (carried over) unreacted coal and ash particles. The collected solids are then disposed of or reinjected into the gasifier for additional efficiency. After the gas is essentially free of particulates, it may be used as a fuel gas or feedstock material. This is often the case for current commercial low-Btu gas.

Particulate removal is generally achieved using some combination of cyclones, wet scrubbers, or electrostatic precipitators. Cyclones placed at the end of the gasifier can remove particulates in the hot exit-gas from the reactor. These units are commonly operated at high temperature and/or high pressure conditions. A cyclone is essentially a settling chamber in which gravitational acceleration is replaced by centrifugal acceleration. The particulate-laden gas generally enters the cyclone tangentially at one or more points and leaves through a central opening at the top of the cylindrical or conical chamber of the unit. The dust particles move toward the outside wall from which they are dropped to a collection bin. Cyclone dust is generally collected dry but is transported in quench water for cooling and ease of transport.

2.6.3 QUENCHING

Gas quenching is the first cleanup step after particulate removal. This process removes many of the volatiles, such as tars, oils, and phenolics, that are released from the coal. This is effected by direct or indirect cooling with water. This condensed wastewater stream (called gas quench liquor or process condensate) contains toxic pollutants at high levels relative to other wastewater streams from these facilities. Quenching also can be used to remove particulates.

2.6.4 ACID-GAS REMOVAL (SULFUR REMOVAL)

In all current acid gas removal processes, the acid gases are selectively dissolved in a liquid passed countercurrent to the gas. This absorption process is generally coupled with a stripping process that regenerates the absorbent. Many of the absorption processes used commercially operate at high pressure and low temperature conditions. A variety of chemical and physical absorption systems are available.

Regeneration of the absorbent is generally accomplished through thermal action. The acid gas removal process has a significant effect on the overall efficiency of energy conversion because of the energy requirements of boiling during the regeneration of the solvent. Between 5.5 to 6 percent of the heating value of the coal can be lost in this process.

Gas production units employing carbon dioxide removal from gas have been classified in this work as producing medium- or high-Btu gas; thus, this processing step is not considered here. In such systems, carbon dioxide and hydrogen sulfide are removed in the same processing step. However, processes to remove sulfur containing gas are usually only employed to make low-Btu gas.

The systems currently available for acid gas removal may be classified in five groups:

- Chemical absorption processes using amines as solvents
- Chemical absorption processes using alkali salts as solvents
- Physical absorption processes
- Specialized combinations of physical and chemical absorption processes
- Adsorption processes

These processes have limited use in low-Btu gas manufacturing as they are applied for removal of sulfur containing gases only. Chemical absorption using alkali salts and adsorption processes can be used for removal of sulfur containing gases only. Processes are available for recovery of the removed sulfur as elemental sulfur.

2.7 COMMERCIALLY AVAILABLE TECHNOLOGIES

These gasifiers include the following technologies:

Single Stage	Dual Stage
o Wellman-Galusha	o Woodall-Duckham
o Wilputte (Chapman)	o Wellman Incandescent
o Riley Morgan	o Foster-Wheeler

2.7.1 SINGLE STAGE

Wellman-Galusha

The Wellman-Galusha process was developed initially in 1896 and is the most prevalent type of gasifier in use in America as of 1979. The process has been commercialized for over 35 years. Approximately 150 such gasifiers have been operated worldwide in many different industrial applications.

The gasification step can be carried out in one of two types of Wellman-Galusha gasifiers: standard or agitated. The latter process employs an agitator that maintains uniformity in the combustion zone of the fixed bed. Use of the agitator also permits the processing of more volatile, caking bituminous coals and increased gasifier capacity. Coal is continuously fed from the top of the water jacketed gasifier and enters the devolatilization zone. Product gas flowing upward (countercurrent) contacts the coal particles and volatilizes organic compounds known collectively as tars and oils, which then exit the gasifier. As the devolatilized coal particles descend further, gasification occurs according to the endothermic reactions discussed under General Process Chemistry. Steam for the reactor is produced by vaporization of cooling water in the jacket of the reactor and is consumed in a typical Wellman-Galusha gasifier at approximately 0.4 to 0.7 pound of steam per pound of coal feed. The lowest zone is the combustion zone where inlet air exothermicly combines with carbon in the coal to produce the heat required for gasification. This air, used at a rate of approximately 3.5 pounds per pound of coal feed, is preheated by passage over the water jacket; the resulting

steam/air mixture is then injected from beneath the ash grate. The residence time for bituminous coal in this gasifier is about four hours. The sole liquid/solid effluent from gasification is ash, which may be handled wet or dry.

Product gas purification for Wellman-Galusha facilities consists of particulate removal with a number of subsequent, optional treatment steps. The raw flue gas exits from one outlet port at the top of the gasifier at approximately 1,100°F. The gas leaving the gasifier is passed through a cyclone where the devolatilized coal dust and ash particles are removed and reinjected or wasted. After solids are removed, many facilities route the gas directly to furnaces for combustion and process heat. Other facilities further treat the gas by quenching (cooling) to remove tars, oils, and some ammonia. The methods used to accomplish this include direct injection of water into product gas mains and gas cooling in spray or packed towers. The temperature of the outlet gas from quenching operatings is typically 110°F. Depending on the tar/oil content, the sensible heat from the product gas can be recovered in a waste heat boiler. Sixty to seventy percent of the tars and oils are removed by wet scrubbing systems. Further cleanup of residual tars can be accomplished by collection in an electrostatic precipitator. The waste stream from this purification step is called quench liquor. Typically, this stream undergoes gravity separation; the tars are often combusted and the aqueous phase is reused or routed to biological treatment. The tars produced from Wellman-Galusha gasifiers amount to approximately 120 pounds per ton of coal feed.

Wilputte (Chapman) and Riley-Morgan

These gasifiers are similar to Wellman-Galusha except for differences in steam feed and ash removal. Steam is fed to these gasifiers and metered into the air stream. In the Wellman-Galusha gasifier air is blown through the jacket-boiler and carries the desired steam with it. Ash removal in these units is via a pan where the ash is dampened and carried by a plow to overflow into an ash hopper.

2.7.2 DUAL STAGE

The primary difference between the single- and two-staged gasifiers is in the number of product gas outlets. Each of the above systems provides for the withdrawal of the main product gas stream from a port located at the top of the gasification zone, and volatile-containing gas outlet port near the top of the gasifier. This design permits an initial separation of tars and oils from the main product gas. The overhead gas is called

top gas, while the main product stream is more commonly called clear gas.

Woodall-Duckham

Woodall-Duckham technology was developed by Il Gas Integrale in Milan, Italy. The process has been operated for over 30 years producing principally industrial fuel gases. Although over 100 commercial Woodall-Duckham gasifiers have been installed worldwide, no commercial or pilot facilities are operating in the United States.

The gasifier is composed of a lower gasification zone and an upper distillation and drying zone. Sized coal is fed to the drying zone at the top of the gasifier where surface and most inherent moisture in the coal is evaporated by heat transfer from upward moving hot (approximately 250°F) gases. The coal is then gradually heated and volatiles driven off in the distillation zone. The water vapor, hot gases, and volatiles constitute the top gas withdrawn from the head of the gasifier. Caking coals will exhibit extremely viscous fluid behavior in this zone, presenting potential problems in operation. In the gasification zone, steam and air are reacted at approximately 2,200°F with the descending coal to produce the clear gas withdrawn from this zone. Ash is removed via lock hopper beneath the distribution grate.

Steam is supplied at 0.52 pounds per pound of coal by passage of the hot inlet air over the gasifier jacket cooling water.

Gas processing differs slightly from single stage technologies. The clear gas is routed to a cyclone where entrained coal and ash particles are removed as cyclone dust. The cleaned gas is then cooled before final use. The top gas is ducted to an electrostatic precipitator where some of the tars and oils are removed along with any particulates. The gas is cooled for additional organics removal prior to blending with the clean gas for final use.

Wellman Incandescent and Foster Wheeler/Stoic

The Wellman Incandescent and Foster Wheeler/Stoic gasifiers are very similar to the Woodall-Duckham design. All three produce top and clear gases of similar quality, and remove ash with a plow mechanism. Therefore, additional detail will not be elucidated here. One commercial facility exists in the United States for each of these technologies; the Wellman Incandescent in Pennsylvania and the Foster Wheeler/Stoic in Minnesota.

2.8 GENERAL PROCESS CHEMISTRY

Coal gasification involves the reaction of coal with air or oxygen and steam to produce a gaseous product that can be used as an energy source or a feedstock material for subsequent chemical processing.

The first step in gasification is pyrolysis or carbonization. The pyrolysis step may be represented by:

$$\text{Heat} + \text{Coal} \rightarrow CO,\ CO_2,\ CH_4,\ \text{other hydrocarbons}$$

The chemical theory of coal pyrolysis indicates that the coal decomposes according to the following steps (shown in Figure 2-3):

(1) As the temperature is raised, the carbon-to-carbon bonds break first.

(2) Carbon to hydrogen bonds sever as the temperature then rises and exceeds 600°C (1,100°F).

(3) The heterocyclic structures decompose as a result of steps 1 and 2 and result in compounds with increased aromaticity.

(4) The average molecular weights of the intermediate products decreases as the temperature rises. This results in evolution of water, carbon monoxide, hydrogen, methane, and other hydrocarbons.

(5) Final decompositions are at a maximum between 600 and 800°C (1,100 and 1,470°F).

These steps take place without the influence of air, oxygen, or steam in a short time frame. These steps are essentially the same as those that occur in coke production, and as discussed in the wastewater characterization sections, one would expect to find many of the same contaminants in water used in gasification as found in coke production.

The subsequent chemistry of gasification is quite complex but may be represented by the following five reactions:

Combustion

$$C + nO_2 \rightarrow (2-2n)\ CO + (2n-1)\ CO_2 \quad (1/2 \leq n \leq 1)$$

Carbon-Steam Reaction

$$C + H_2O\ (\text{steam}) \rightarrow CO + H_2$$

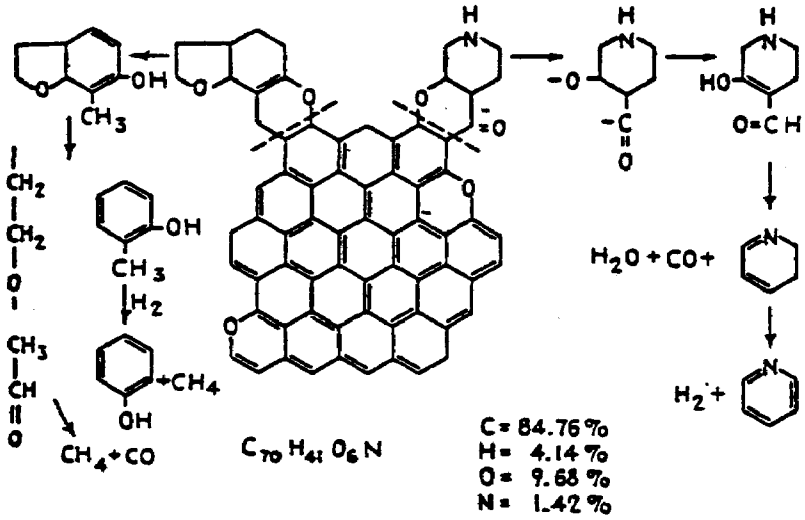

Figure 2-3

PYROLYSIS OF COAL

Carbon-Hydrogen or Hydrogasification Reaction

$$C + 2H_2 \rightarrow CH_4$$

Water-Gas Shift Reaction

$$CO + H_2O \text{ (steam)} \rightarrow H_2 + CO_2$$

Methanation Reaction

$$CO + 3H_2 \rightarrow CH_4 + H_2O$$

The composition of the gas leaving the gasifier is a function of the relative contribution of each reaction to the overall process. Thus, the rate of each reaction, the residence time of the reactants, and ratios of reactants are the controlling factors. The rate of the pyrolysis reaction is controlled by temperature and the manner in which the coal is fed into the gasifier relative to the steam and air or oxygen. If the coal is fed into the gasifier such that it is exposed to high temperatures for a period of time prior to exposure to steam and oxygen or air then the pyrolytic reaction will have a longer relative contribution to the overall product blend than if the coal, steam, and air or oxygen were fed into the gasifier together.

The combustion reaction is the only reaction which goes to completion; all the other reactions reach equilibria above 2,000°F with short residence times. The carbon-steam reaction is endothermic; all the other reactions are exothermic. In addition, the reaction rates may be increased by increasing the amounts of reactants in the feed. For example, increasing the amount of steam in the feed shifts the equilibrium of the carbon steam reaction.

Temperature affects the reaction rates of the reactions subsequent to pyrolysis. At low temperatures, the value of n in the combustion reaction approaches one, so that CO_2 is the principal product. When higher temperatures are utilized, n approaches a value of 1/2, and CO is the principal product. Fluidized and entrained bed gasifiers operate at higher temperatures, thus, carbon monoxide is the favored product. Also, very few devolatilized organic compounds survive the high temperature conditions; they are rapidly pyrolyzed to carbon oxides and methane. In general, reaction rates increase exponentially with temperature as long as the reactants are capable of diffusing to the reaction sites such that the reactants are present in stoichometric quantities.

2.9 PRODUCT

The major components of low-Btu gas are nitrogen, carbon monoxide, hydrogen, and carbon dioxide. Methane is generally present at 1 to 3 percent with higher organic compounds totaling less than 1 percent. The composition depends on coal used and the processing conditions. A general range of composition is shown in Table 2-2.

Other significant components in low-Btu gas include sulfur compounds and ammonia. Sulfur compounds include hydrogen sulfide, carbon oxysulfide, and carbon disulfide. Their content depends on the sulfur content of the coal and, of course, on any removal process.

Low-Btu gas is produced at a quantity of about 130,000 std ft^3/t of coal consumed with considerable variation depending on coal type and process.

2.10 USES

Since low-Btu gas has been produced for many years, it has been used for many purposes. In general, low-Btu gas has been used where natural gas was not available and a gaseous fuel is required. A list of processes which have used low-Btu gas is shown in Table 2-3. Most of these uses involve heat treating as in brick manufacture or ore processing. Boiler firing for steam production also has been a major use. Low-Btu gas also has been used for ammonia (fertilizer) production with further processing in the ammonia plant operation.

A potential future use of low-Btu gas is in the direct manufacture of electricity by the use of fuel cells. Such systems can use both medium and low-Btu gas.

Other future uses of low-Btu gas facilities are envisioned to include central gas generation facilities for a group of manufacturing processes located near the gas production site. Such facilities would provide steam and fuel gas to a group of processors, which might include a number of heat treating type operations. Such arrangements would produce the economy of scale needed for the gas production operation and at the same time allow the sizing of the consuming plants based on an optimum for that industry.

Table 2-2

Typical Composition of
Low-Btu Gas
From Bituminous Coals and Lignite

Component	Volume Percent, dry basis
N_2	40-55
CO	20-35
H_2	15-20
CO_2	3-10
CH_4	1-3
C_2T	0.1-0.5
Btu/scf	100-200

Source: 16 and 28

Table 2-3

Past Users of Gas Produced

- Chemical plants
- Glass plants
- Steel mills
- Magnesium plants
- Silk mills
- Bakeries
- Wire mills
- Foundries
- Potteries
- Aluminum and stainless steel plants
- Ordnance plants
- Tin plate mills
- Lime plants
- Brick plants
- Zinc smelters
- Iron ore processors
- Fertilizer plants

SECTION 3

SAMPLING AND ANALYSIS PROGRAM

3.1 PURPOSE

The objective of the low-Btu gas on-site sampling and analysis program was to develop a wastewater characterization data base as widely applicable to the industry as possible. Operating conditions of low-Btu technology, such as pressure, bed type, coal feed, and gas cleanup systems, can vary considerably from one facility to another. These are factors that may subsequently have an influence on the characteristics of the wastewater produced. Therefore, the sampling program attempted to cover a broad range of these operating conditions.

Individual wastewater streams produced at low-Btu gas facilities were sampled in order to determine pollutant loadings expected prior to wastewater treatment. Typically, in wastewater sampling programs such as this, pollutant concentrations are also analyzed for samples taken between treatment steps (in addition to untreated wastewater) to determine treatment performance. Yet, this industry did not employ treatment technologies (other than evaporation or recycle) at the time of sampling.

Thus, in addition to obtaining an industry-wide representation of raw wastewater characterization, it was hoped that the data could provide information necessary to determine appropriate treatment technologies.

Because of the small number of commercially operating facilities, pilot plants were included in the sampling program. Pilot plants are constructed for the purpose of developing data for the final design of commercial facilities and thus were deemed appropriate for sampling in this program. Pilot plant equipment is designed and built at a size that can be scaled-up to commercial scale with a high degree of confidence.

3.2 SCOPE

The low-Btu gas process can be broken down into basically four areas:

- Ancillary Processes
  - Coal storage, handling, and preparation
  - Steam and power production

- Gas Production
  - Gasification
  - Ash handling

- Gas Purification
  - Quenching
  - Acid gas removal

- End Use.

This sampling and analysis program characterized only those wastewaters associated with the gas production and purification processes. Ancillary operations, such as those listed above, are processes that may be similar to other industrial operations that are regulated by the Environmental Protection Agency's existing effluent limitations guidelines. Wastewaters produced by the end use applications of low-Btu gas are not addressed in this study.

No wastewater treatment existed at these facilities. Therefore, effluent samples from treatment units were not obtainable.

3.3 SITE SELECTION CRITERIA

As of 1981 (as opposed to the more updated industry status presented in Section 2), the low-Btu gasification industry was composed of approximately 12 commercially operating facilities, three commercial facilities in indefinite shutdown, six operational pilot plants, two pilot plants in shutdown, and six process development units. In addition to accessibility, these facilities were compared with respect to the following characteristics to determine which were the most appropriate for sampling:

- Coal feed type

- Process technology
  - Pressure
  - Temperature
  - Bed type (fixed, fluidized, entrained)
  - Ash handling mechanism

- Gas purification process

- Effluent sources

- Industrial application

The selection of facilities sought to provide variations in each of these factors. These factors can influence the characterization of wastewater sources as described below.

3.3.1 COAL TYPE

All major ranks of coal (lignite, subbituminous, bituminous, and anthracite) have been gasified by at least one facility in the U.S. It can be anticipated that a fully developed coal gasification industry will use a wide variety of coal types. These coals differ widely in composition, with commensurate variation in gasifier operation, and ultimately in the flow and composition of wastewater and solid waste streams. Of particular significance is the volatile matter content of the feed coal. For instance, a fixed-bed gasifier utilizing anthracite will generate a quench water containing less organic material than a bituminous coal. Also important is the trace element concentrations in the coal. This will have a substantial impact on the gasifier ash composition and thus potentially affect the metals content of water used to handle the ash.

3.3.2 PROCESS TECHNOLOGY

Three basic types of bed geometries are employed in commercial gasifiers (molten-media gasifiers are not commercialized in the U.S.):

- Fixed
- Fluidized
- Entrained

Associated with each of these is a characteristic operating temperature and pressure that effects product gas composition. In turn, this will cause variation in the characteristics of the wastewater streams generated by cleaning the gas and in combustion products of the gas.

Entrained bed and fluid bed systems are in general run at higher temperatures than fixed bed systems. Fixed bed gasification produces a raw gas that is laden with elutriated ash, unburned coal particulates, volatile matter, ammonia, and sulfur compounds. For fluidized and entrained beds, the raw gas will contain relatively lower amounts of tars and oils because these substances are reacted within the gasifier at higher temperatures.

3.3.3 GAS PURIFICATION

Quenching of the gas for particulate removal and for removal of oils and tars produces a highly contaminated wastewater stream. While overall concentration of materials in the stream may be a function of the quenching process, the contaminants present are primarily a function of the gasification conditions and the coal used. If sulfur is removed from the raw gas, then an additional wastewater stream may be produced. Ash from the gasifier may be removed dry or carried in a suspension of water (slurry or sluice) which will also cause an additional wastewater stream.

3.3.4 EFFLUENT SOURCES

The major sources of wastewater from the production of low-Btu gas are:

- Ash or dust sluice/quench water
- Gas quench/cooling condensate
- Sulfur removal condensate blowdown

Not all facilities generate all of these sources of waste streams. The selection of facilities for sampling sought to find those with at least one or more of these sources. Figure 3-1 is a generic diagram of wastewater sources sampled during the program.

3.3.5 INDUSTRIAL APPLICATION

Low-Btu gas can be used for a number of different purposes such as chemical feedstocks, power supply, and fertilizer production. Associated with each end use may be different production processes which in turn may produce different wastewater streams.

3.4 PLANTS SAMPLED

After consideration of the above factors, four low-Btu gas facilities were determined good candidates for sampling. These four facilities and their operating characteristics are shown in Tables 3-1 and 3-2. Appendix A describes each facility in detail, including their operating characteristics, waste streams, and sample points.

3.5 POLLUTANTS ANALYZED

The following classes of pollutants were analyzed in wastewater samples taken from low-Btu facilities:

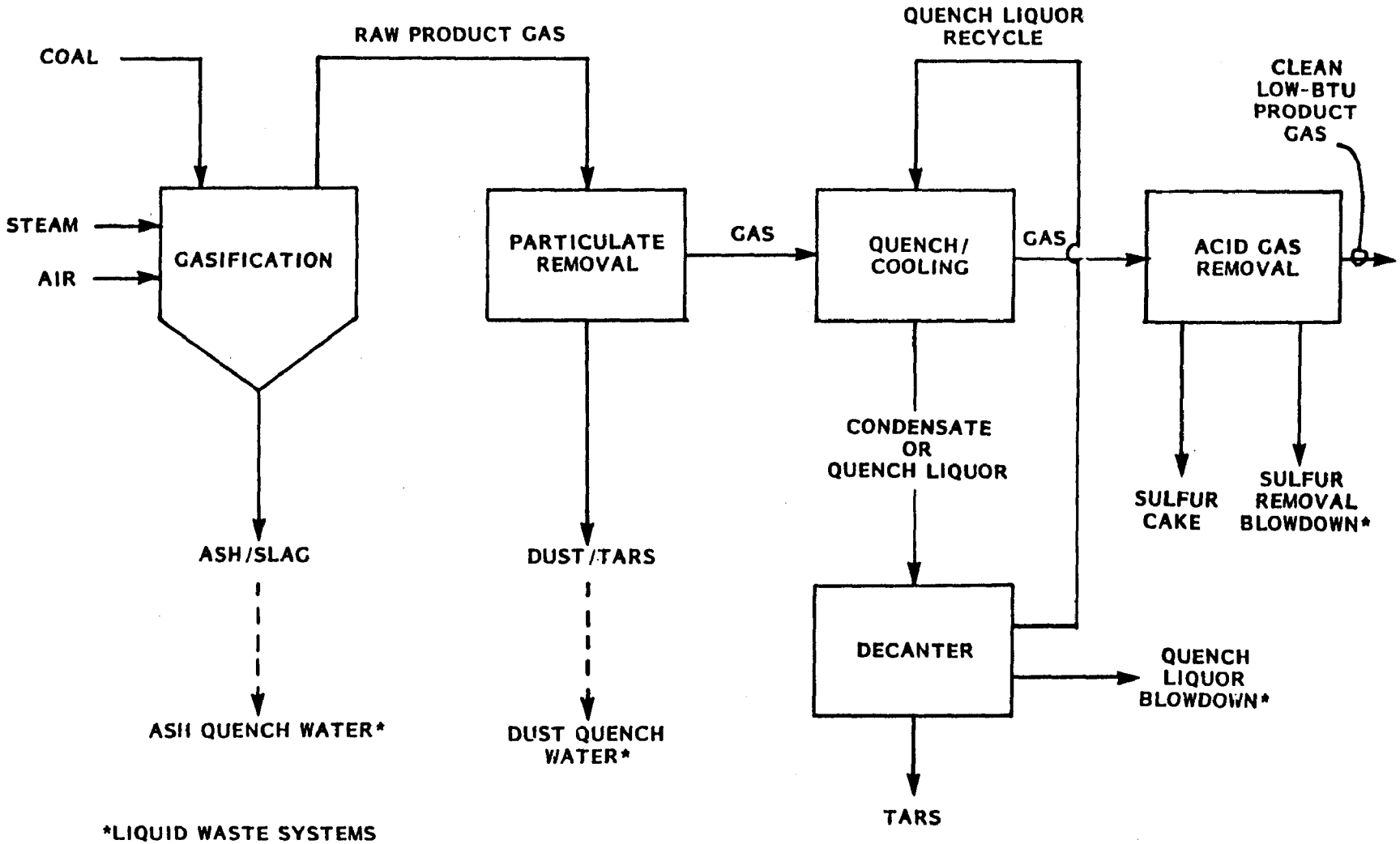

Figure 3-1. Liquid Waste Streams Generated at a Typical Low-Btu Gasification Facility

Table 3-1

Operating Characteristics of Gasifiers Sampled

Technology	Coal Feed Type	Coal Feed Rate TPD*	Gasifier Temp+ °F	Gasifier Pressure psig
Pressurized, advanced, mechanically stirred fixed bed (General Electric)	Ill#6 bituminous	24	1100	300
Single stage, fixed bed** (Wilputle-Chapman)	Virginia bituminous	22	1050-1250	atm
Single stage, fixed bed*** (Wellman-Galusha)	ND lignite	12-24	1000-1000	atm
	Texas lignite	14-34	850-1200	atm
	Colorado subbituminous	15-44	850-1200	atm
Pressurized single stage, fixed bed (Wellman-Galusha)	Pittsburgh no. 8 bituminous	22	1000-1100	200

* TPD = Tons per day of coal.

** This facility sampled twice but operating conditions remained the same.

*** This facility sampled three times during test runs using different coal types.

\+ The off-gas temperature from the gasifier - this temperature is relatively close to the devolatization temperature which, in the case of fixed bed gasifiers, has an effect on the amount of organics present in the off gas.

Table 3-2

Gas Purification Processes of Gasifiers Sampled

Technology	Location	Gas Use	Purification Process
Pressurized, advanced, mechanically stirred, fixed bed	General Electric Research Center Schenectady, NY	Test Burning	Water quench --> Venturi scrubber Benfield --> Saturator
Single stage, fixed bed	Holston Army Ammunition Plant Kingsport, TN	Process Furnaces	Cyclone(hot)--> Tray scrubbers--> Spray scrubbers
Single stage, fixed bed	Fort Snelling Minnesota	Pelletizing Kiln	Dry cyclone --> Water scrubbers
Pressurized, single stage, fixed bed	Morgantown Energy Technology Center Morgantown, WVA	Process Testing Stretford unit	Cyclone --> Humidifier -->Cyclone Venturi scrubber --> Cooler -->

- o Priority pollutants
- o Appendix C pollutants
- o Conventional pollutants
- o Noncoventional pollutants

Conventional Pollutants

The conventional pollutants, listed in Table 3-3, were defined in Section 304(b)(4) of the 1977 Amendments to the Clean Water Act and at 44 FR 44501 (30 July 1978). Fecal coliform was not selected for this list since there is no reason to believe that any fecal matter would be present in synfuels wastewater samples.

Priority Pollutants

The priority pollutants, also presented by category in Table 3-3, are a list of toxic organics and metals that are defined in the Clean Water Act (see Table 1 of Section 301) as well as the 1979 Settlement Agreement.* The specific compounds were selected by reviewing the Organic Chemical Producers Data Base, reviewing the frequency of occurrence of the compounds in water, and determining whether or not a standard was commercially available. The data base used for these determinations is found in an Agency publication entitled, Frequency of Organic Compounds Identified in Water by Shackelford and Keith (Environmental Research Laboratory, EPA-600/4-76-062, Athens, Georgia, 1976).

Appendix C Compounds

The same data base was used for selection of the Appendix C compounds, which also are listed in Table 3-3. This set of pollutants derives its name from Appendix C of the 1976 Settlement Agreement. As with the priority pollutants, the specific compounds in Table 3-3 are actually representatives of broad classes of pollutants. For example, a-terpineol and camphor represent the class of compounds called aliphatic terpenes. The same criteria were used to determine the specific Appendix C pollutants as were exercised in the selection of the priority pollutants. These are summarized below:**

---

*Natural Resources Defense Council, Inc. vs. Train (1979).

**Rational for Synfuel Protocol, preliminary draft, Radian Corporation, EPA Contract No. 68-01-5163, June 1981.

Table 3-3

Pollutant Parameters to be Analyzed in Wastewater Samples

CONVENTIONAL POLLUTANTS

Biochemical Oxygen Demand (BOD_5)*
pH[1]
Oil and Grease
Total Suspended Solids (TSS)

*Total and Dissolved BOD_5

PRIORITY POLLUTANTS

Pesticides	Volatiles
Aldrin	Acrolein
Dieldrin	Acrylonitrile
Chlordane	Benzene
4,4'-DDT	Carbon tetrachloride
4,4'-DDE	Chlorobenzene
4,4'-DDD	1,2-Dichloroethane
-Endosulfan	1,1,1-Trichloroethane
-Endosulfan	1,1-Dichloroethane
Endosulfan sulfate	1,1,2-Trichloroethane
Endrin	1,1,2,2-Tetrachloroethane
Endrin aldehyde	Chloroethane
Heptachlor	bis (Chloromethyl) ether*
Heptachlor epoxide	2-Chloroethylvinyl ether
-BHC	Chloroform
-BHC	1,1-Dichloroethylene
-BHC	1,2-trans-Dichloroethylene
-BHC	1,2-Dichloropropane
PCB-1242	1,2-Dichloropropylene
PCB-1254	Ethylbenzene
PCB-1221	Methylene chloride
PCB-1232	Methyl chloride
PCB-1248	Methyl bromide
PCB-1260	Bromoform
PCB-1016	Dichlorobromomethane
Toxaphene	Trichlorofluoromethane*
	Dichlorodifluoromethane*
	Chlorodibromomethane
	Tetrachloroethylene
	Toluene
	Trichloroethylene
	Vinyl chloride

Table 3-3 (Continued)

Pollutant Parameters to be Analyzed in Wastewater Samples

PRIORITY POLLUTANTS

Base/Neutral Compounds

Acenaphthene
Benzidine
1,2,3-Trichlorobenzene
Hexachlorobenzene
Hexachloroethane
bis (2-Chloroethyl) ether
1,2-Dichlorobenzene
2-Chloronaphthalene
1,3-Dichlorobenzene
1,4-Dichlorobenzene
3,3'-Dichlorobenzidine
2,4-Dinitrotoluene
2,6-Dinitrotoluene
1,2-Diphenylhydrazine (as azobenzene)
Fluoranthene
4-Chlorophenyl phenyl ether
4-Bromophenyl phenyl ether
bis (2-Chloroisopropyl) ether
bis (2-chloroethoxy) methane
Hexachlorocyclopentadiene
Isophorone
Naphthalene
Nitrobenzene
N-Nitrosodimethylamine
N-Nitrosodiphenylamine
N-Nitrosodi-n-propylamine
bis (2-Ethylhexyl) phthalate
Butyl benzyl phthalate
Di-n-butyl phthalate
Di-n-octyl phthalate
Diethyl phthalate
Dimethyl phthalate
Benzo(a)anthracene
Benzo(a) pyrene
3,4-Benzofluoranthene
Benzo(k)fluoranthene
Chrysene
Acenaphthylene
Anthracene
Benzo (g,h,i)perylene
Fluorene
Phenanthrene
Dibenzo(a,h)anthracene
Indeno(1,2,3-c,d)pyrene
Pyrene
2,3,7,8-Tetrachlorodibenzo-p-dioxin

Acid Compounds

2,4,6-Trichlorophenol
p-Chloro-m-cresol
2-Chlorophenol
1,4-Dichlorophenol
2,4-Dimethylphenol
2-Nitrophenol
4-Nitrophenol
2,4-Dinitrophenol
4,5-Dinitro-o-cresol
Pentachlorophenol
Phenol

Metals

Antimony
Arsenic
Beryllium
Chromium
Cadmium
Copper
Lead
Mercury
Nickel
Selenium
Silver
Thallium
Zinc

Other

Cyanide

*These compounds have been recently removed from the priority pollutant list (see 46 FR 2266 and 46 FR 10723).

Table 3-3 (Continued)

Pollutant Parameters to be Analyzed in Wastewater Samples

APPENDIX C COMPOUNDS

1. Acetone
2-21. n-Alkanes (C_{10}-C_{30})(C_{12}*)
22. Biphenyl
23. Camphor*†
24. Chlorine[1]
25. Cumene*
26. Dibenzofuran*
27. Di-n-butylamine†
28. Diethylamine*†
29. Diethyl ether†
30. Dimethylamine†
31. Diphenylamine*†
32. Diphenyl ether*
33. Methyl ethyl ketone
34. Nitrites
35. Styrene
36. -Terpineol*†

*Candidate for Stable Label Standards.
†Tentatively chosen compounds to represent general classes.

SYNFUELS GENERAL NONCONVENTIONAL WASTEWATER POLLUTANTS

Acidity	Aluminum
Alkalinity	Barium
Total Solids (TS)	Bismuth
Total Volatile Solids (TVS)	Boron
Total Dissolved Solids (TDS)	Calcium
Chemical Oxygen Demand (COD)	Cobalt
Ammonia	Gold
Total Kieldahl Nitrogen	Indium
Total Phosphorus	Iron
Total Organic Carbon (TOC)	Lithium
Total Phenolics (4AAP)	Magnesium
Settleable Solids (SS)[1]	Molybdenum
Thiocyanate	Platinum
Sulfate	Potassium
Sulfite	Silicon
Sulfide	Sodium
Nitrates	Strontium
Dissolved Oxygen (DO)[1]	Tellurium
Temperature[1]	Tin
Volatile Dissolved Solids (VDS)	Titanium
	Tungsten
	Uranium
	Vanadium
	Yttrium

[1]On-site analysis.

Table 3-3 (Continued)

Pollutant Parameters to be Analyzed in Wastewater Samples

SYNFUELS ORGANIC NONCONVENTIONAL

Benzoic Acid
Hexanoic Acid
-Naphthylamine
-Picoline
Dibenzothiophene
Formates

- The compound chosen had to have been identified in water with a frequency of 5 percent or more with respect to other members of that chemical class that had been identified in water.

- The compound chosen had to have a source of commercially available standards. The standards furthermore had to be available in reasonable purity (>90 percent) and at reasonable prices.

- To help prioritize choices with a chemical class, the "Organic Chemical Producers Data Base" was checked. An updated 28 November 1979 version was used for the present criteria choices.

- To further help prioritize choices within a chemical class, the U.S. EPA Toxic Substances Control Act Chemical Substances Inventory, Volumes II and III (May 1979), were also used. This information was not available in 1976, but was used now because of its relationship to the Agency's interest in toxic chemicals and its data on what toxic chemicals are being manufactured or imported in the U.S.

Nonconventional Pollutants

Existing information on the low-Btu industry was screened to determine what other pollutants could appear at concentrations warranting potential concern. As a result, six organic pollutants and a more extensive list of inorganic pollutants and water quality parameters were selected for analysis. The organic nonconventionals, listed in Table 3-3, were selected after review of results from several synthetic fuels industry environmental assessments and a review of the current literature in the area of synthetic fuels wastewater analysis. From these classes, specific compounds were selected to be representative of the class. The individual selections were based on: (1) representativity of class, (2) frequency of occurrence in synthetic fuels related wastewater, (3) availability of pure standards, and (4) detection using existing screening protocols (EPA Methods 624 and 625). Additional detail is provided in the previously cited Rational for Synfuel Protocol.

The remaining nonconventional pollutants also are listed in Table 3-3. The compounds in the list from acidity to total phenolics (4AAP) are often referred to as water quality parameters. They are indicators of the presence of general classes of compounds (e.g., total phenolics - indicates the presence of phenolic-type compounds) and general properties of streams (e.g., alkalinity -

is the capacity of water to neutralize a strong acid to a designated pH).

The measurement of settleable solids (SS) is an indicator of the amount of solid material that will settle in a relatively short period of time (i.e., approximately one hour). It is a particularly useful parameter for streams representing runoff from storage and disposal areas.

Sulfur and nitrogen compounds are gasification products that can appear in wastewater and solid waste streams associated with synfuels processing. Formation of sulfate, thiosulfate, carbonyl sulfide, and thiocyanate during synfuels processing is important to operation of sulfur recovery technologies. As these compounds accumulate in a sulfur recovery liquor, the effectiveness of sulfur removal and recovery is reduced. As such, a periodic release (blowdown) of the liquor is required. Knowledge of the levels of these inhibitors in liquid streams from facilities without sulfur recovery will provide input for design of sulfur recovery units and estimation of blowdown quantity and quality.

The nonconventional metal wastewater pollutants listed in Table 3-3 are those (exclusive of the priority metal pollutants) that are capable of quantitative determination by Inductively-Coupled Argon Plasma Emission Spectroscopy (ICAPES). Although many of these are not likely to be found in low-Btu gasification waste streams, both the nature of this study and the economics of ICAPES analysis provided incentive for determination of these elements.

3.6 SAMPLING EPISODES

Sampling of the individual gasifier facilities was based on a sample plan for each site. The creation of the sampling plan came from procedures developed in a generic sampling program. The annotated outline of the sampling plan is shown in Table 3-4.

Generally, each sampling visit lasted about three days. The Holston Army Ammunition Plant facility was sampled twice and the Ft. Snelling facility was sampled three times. Together with the other two gasifiers (each sampled once), this totalled seven individual sampling episodes.

Measures were incorporated to ensure quality sampling in compliance with the procedures documented by EPA. Whenever possible, established protocols were used to perform the sampling. When situations existed where estabished protocols could not be used, a detailed description of the sampling procedure was documented in a bound, paginated field or laboratory notebook. In these cases, guidance will be provided by the ASTM manual for water and wastewater sampling.

Table 3-4

Annotated Outline for Sampling Plan

1.0 Introduction

- o Background, including EPA's mandate for sampling
- o Purpose of effort
- o Brief summary of planned activities on site
- o Brief summary of any needed cooperation of facility personnel
- o Planned schedule for major activities

2.0 Sample Plan

- o Flow diagram and discussion of processes at site with energy and material flows where applicable
- o Plant operting conditions--discuss operating schedule and number of plant conditions to be characterized
- o Brief explanation of process variabilities including how these affect sample timing and how to interpret resulting data
- o Sampling point selection
  - Water
  - Solids and slurries
- o Summary matrix of sampling location, type, frequency, and volume
- o Summary table of number and preservation of samples
- o Expected conditions at each sample point and definition of special equipment or procedures to be used
- o Chain-of-custody documentation
- o Summary table of pollutants to be analyzed

3.0 Sample Team Organization

- o Identification of sample crew chief
- o Identification of sample crew size
- o Listing of sample crew

4.0 Quality Control/Quality Assurance Program

- o Approach which includes assignment of responsibility for QC/QA
- o Sampling collection program
- o Sampling transportation QC program
- o Sample analyses QC program

Addendum

- o Reason site was selected under this program

The sampling and analytical procedures used were based on the EPA Manual, Sampling and Analysis Procedures for Screening of Industrial Effluents for Priority Pollutants, April 1979. Additional information is found in the 3 December 1979 and 18 December 1979 issues of the Federal Register.

SECTION 4

WASTEWATER CHARACTERIZATION

4.1 GENERAL

The data that were gathered during the sampling of the four low-Btu gas plants are summarized and discussed in this section. These data are believed to be applicable to raw wastewater streams for the low-Btu gas industry in general because of the different operating characteristics represented by each of the four plants (see Section 3). Since no wastewater treatment processes were being used, there are no data in this section on treated effluents from these plants.

In most cases, there will be only one effluent from a coal gasifier although there may be one, two, or three sources of wastewater. The largest stream is quench liquor from cooling or scrubbing the low-Btu gas. There also can be ash sluice (or ash quench) water. Quench liquor can be used for ash sluice and recycled or if fresh makeup water is used, it can be put into the quench liquor. Also there are effluents from acid gas removal processes. During the testing of the four plants, however, there was no effluent from the sulfur removal or recovery units.

The information presented in this section is a summary of the wastewaster data for all four plants by waste stream. The data for each sampling episode are in Appendix A along with a description of the processes and of the sampling activities. The general methods of sampling are described in Section 3.

4.2 GAS QUENCH WATER

All four facilities produced a gas quench condensate. Samples from the Ft. Snelling facility were taken from the gas scrubber water, which was not recycled. The METC facility produced a scrubber recycle and a direct cooler recycle, both of which were sampled. The GE facility produced a quench recycle and the Holston facility produced a scrubber recycle, both of which were sampled also. The data from all these streams are presented individually by facility in Appendix A but are combined here and presented in the following sections.

4.2.1 PRIORITY ORGANIC POLLUTANTS

Twenty priority organics were detected in more than one sample. The data on these materials are summarized in Table 4-1. Since eleven of these compounds were found in samples from all four of the facilities, these materials are likely to be present in any low-Btu gas raw wastewater. The compounds present are cyclic and heterocyclic compounds of the type frequently associated with coal processing operations, such as coking. Phenol and 2,4-dimethylphenol are the compounds present in the highest concentration.

There were 25 other priority organic pollutants which were detected in only one sample. These are listed in Table 4-2. Another 57 priority organic pollutants were not detected in any samples and are listed in Table 4-3. These compounds will probably not be significant in raw wastewater from low-Btu gas production. The data from the analysis of one sample has been rejected because the sample appeared to have been contaminated with laboratory organic solvents and plasticizers.

Analyses also were performed for Synfuels Organic Nonconventional Pollutants and for Appendix C compounds. The results of these analyses are shown in Table 4-4. Ten compounds were detected and of these three were found in only one sample. Since the other seven compounds were detected in a number of samples, they are likely to be present in low-Btu gas raw wastewater. The highest concentrations were benzoic acid and hexanoic acid.

4.2.2 PRIORITY METALS

Significant amounts of the metals present in the coal are carried over into the quench water. Nineteen samples were analyzed for 13 priority metals. The analytical results are summarized in Table 4-5. Most of the priority metals were present in detectable levels. Those present at the highest concentration were arsenic, selenium, and zinc. These metals are present in sufficient concentration that they should be considered in the treatment and disposal of the raw wastewaters from low-Btu gas production.

4.2.3 CONVENTIONAL POLLUTANTS

The conventional pollutants analyses are shown in Table 4-6. Of these, the most significant is the BOD_5 which ranged as high as 25,000 ppm with 8 samples reported as greater than 2,000 ppm. With the high organic content of the streams as shown by total organic carbon analysis and by analyses of priority organic pollutants, high BOD_5 analyses would be expected. The oil and

Table 4-1

Priority Organic Pollutants in
Gas Quench Wastewater (ug/l)
Found in More Than One Sample

	No. of Samples	No. of Detects	Min	Mean	Median	Max
Acenaphthene	20	11	4	547		2580
Benzene	20	9	288	1240		2780
2,4-Dimethylphenol	19	16	34	24900		197400
2,4-Dinitrotoluene	20	2	257			1570
2,6-Dinitrotoluene	20	2	2			124
1,2-Diphenylhydrazine	20	4	1	76		214
Ethylbenzene	20	6	21	2570		14900
Fluoranthene	20	13	26	2180		3490
Naphthalene	20	16	378	16400		82400
N-nitrosophenylamine	20	7	62	242		504
Phenol	19	19	3220	161000		754000
Benzo(a)anthracene	20	10	13	8870		88000
Benzo(a)pyrene	20	4	5	20		54
Chrysene	20	9	9	9680		86600
Acenaphthaline	20	10	122	1230		2820
Anthracene	20	16	14	560		2830
Fluorene	20	7	10	316		936
Phenanthrene	20	16	28	1780		10300
Pyrene	20	9	17	1180		9540
Toluene	20	8	135	698		1350

Table 4-2

Priority Organic Pollutants Detected Only Once
In Gas Quench Water

Acrylonitrile
Carbontetrachloride
1,2,4-Trichlorobenzene
Hexachlorobenzene
Hexachloroethane
1,1,2,2-Tetrachloroethane
Chloroethane
2-chloro ethyl vinyl ether
2-chloronaphthalene
Chloroform
1,3-Dichlorobenzene
1,1-Dichloroethylene
1,2-trans-dichloroethylene
1,3-dichloropropylene
4-Bromophenyl phenyl ether
Bis(2-chloroethoxy)methane
Methyl bromide
Bromoform
Dichlorobromomethane
Trichlorofluoromethane
Chlorodibromomethane
Pentachlorophenol
Tetrachloroethylene
Trichloroethylene
Vinyl chloride

Table 4-3

Priority Organic Pollutants Not Detected
In Gas Quench Water

Acrolein
Benzidine
1,2-dichloroethane
1,1,1-trichloroethane
1,1-dichloroethane
1,1,2-trichloroethane
Bis(chloromethyl)ether
Bis(2-chloroethyl)ether
2,4,6-trichlorophenol
2-chlorophenol
1,2-dichlorobenzene
1,4-dichlorobenzene
3,3-dichlorobenzidine
2,4-dichloro phenol
1,2-dichloro propane
4-chlorophenyl phenyl ether
Bis(2-chloroisopropyl)ether
Dichlorodifluoromethane
Hexachlorobutadiene
Hexachlorocyclopentadiene
Isophorone
2-nitrophenol
2,4-dinitrophenol
4,6-dinitro-o-cresol
N-nitrosodimethylamine
N-nitroso-n-propylamine
Dimethyl phthalate
3,4-Benzofluoranthene
Benzo(k)fluoranthene
Benzo(ghi)perylene
Dibenzo(a,h)anthracene
Indeno(1,2,3-Cd)pyrene
Aldrin
Dieldrin
Chlordane
4,4'-DDT
4,4'-DDE
4,4'-DDD
-endosulfan
-endosulfan
endosulfan sulfate
endrin
endrin aldehyde
heptachlor
heptachlor epoxide
-BHC
-BHC
-BHC
-BHC
PCB-1242
PCB-1254
PCB-1221
PCB-1232
PCB-1248
PCB-1260
PCB-1016
Toxaphene

Table 4-4

Synfuels Nonconventional Organic Pollutants
and Appendix C Compounds
In Gas Quench Water (ug/l)

	No. of Samples	No. of Detects	Min	Mean	Median	Max
Methyl ethyl ketone	19	13	41	1574		5860
Acetone	19	14	166	8550		10300
Diethyl ether	19	1	10900	10900		10900
Benzoic Acid	19	8	7590	19700		32500
Hexanoic Acid	19	7	10200	13100		14600
Dibenzofuran	19	11	38	4350		16600
n-Dodecane	19	5	914	2270		3210
-Terpinol	19	1	26	26		26
Dibenzo thiophene	19	1	309	309		309
Biphenyl	19	9	30	508		2090

Table 4-5

Priority Metals in Low-Btu Gas Quench Wastewater (ug/l)

	No. of Samples	No. of Detects	Min	Mean	Median	Max
Sb	19	14	5	148		1100
As	19	19	8	3128		35500
Be	19	9	11	12		14
Cr	19	16	6	177		2250
Cd	19	15	3	22		100
Cu	19	14	6	89		301
Pb	19	4	8	92		200
Hg	19	10	0.4	13		21
Ni	19	13	7	206		391
Se	19	17	10	6690		51900
Ag	19	5	3	14		45
T TL	19	11	2	98		200
Zn	19	18	25	637		6600

Table 4-6

Conventional Pollutants in Gas Quench Wastewater (mg/l)

	No. of Samples	No. of Detects	Min	Mean	Median	Max
pH	20	20	6.8	8.2		9.3
BOD_5	20	20	340	*		25000
Oil and Grease	19	19	142	796		1490
TSS	20	20	11.6	534		5060

*8 values reported as >2000.

grease content of the stream also is expected based on the nature of the waste streams where tars and organics are reported by decantation. The raw wastewater appears to be a significant source of BOD_5.

The total suspended solids which averaged 534 mg/l and the pH which ranged from 6.8 to 9.3 should not present any problems for handling or treating of the raw wastewater.

4.2.4 NONCONVENTIONAL POLLUTANTS

The results of the nonconventional pollutants analyses are summarized in Table 4-7. The results in general are as expected based on comparison to similar tests in coke manufacture and in high-Btu gas manufacture. Most of the analyses can be related to the source of the wastewater.

Since the gas being quenched contains 3 to 10 percent carbon dioxide, the concentrations of carbonates and bicarbonates found are to be expected. These materials also are largely responsible for the acidity and alkalinity present. The total organic carbon and chemical oxygen demand reflect the carbon compounds which are being removed from the gas stream in the quench process. This large content of organic compounds is, of course, a major factor which must be considered in the treatment and disposal of the raw wastewater.

Phenolics average 927 mg/l in the samples. Since phenol and 2,4-dimethylphenol were found to be the highest concentration of priority organic pollutants, high levels of phenolics are to be expected. Phenolics are present in sufficient concentrations that they must be considered in the treatment and disposal of the wastewater.

The analysis of total solids, total volatile solids, total volatile suspended solids, and total dissolved solids all reflect the organic material present in the samples.

Ammonia averaged 8960 mg/l which is in sufficient concentration to warrant its removal from the wastewater. The Kjeldahl nitrogen includes both ammonia nitrogen and nitrogen present in organic nitrogen compounds. The difference between the Kjeldahl nitrogen and ammonia analyses indicates that significant quantities of nitrogen containing organic compounds are present.

Thiocyanates and chlorine are high, which probably contributes to the difficulty in treating this wastewater by biological oxidation (see Section 5).

The presence of sulfur compounds is expected because of the sulfur content of the coal.

Table 4-7

Nonconventional Pollutants in Low-Btu Gas Quench Wastewater (mg/l)

	No. of Samples	No. of Detects	Min	Mean	Max
Acidity	20	9	1590	4220	10200
Alkalinity	20	20	1140	16600	37500
HCO_3	19	19	754	15200	32000
CO_3	19	12	7	3490	9810
TOC	18	18	207	12800	34900
COD	19	19	11500	62300	88000
Phenolics	20	20	0.66	927	6330
Pn	18	1		0.46	
Cl-	17	15	26.3	10300	24000
F-	19	19	1.78	1030	3000
TS	20	20	1220	41800	82300
TVS	19	19	89	33400	72800
TVSS	19	19	11.2	267	980
TDS	20	20	578	38300	81700
CN	19	16	0.16	106	269
SCN	19	19	18	1440	3340
CN/Cl_2	17	15	0.02	309	1130
Kjeldahl Nitrogen	19	19	978	9830	15800
NH_3	19	19	37	8960	13700
NO_3	17	12	1.43	132	357
NO_2	18	5	0.56	1.4	3.5
PO_4	20	18	0.051	10	100
SO_4	19	17	49	3610	15100
SO_3	19	19	25	545	4300
$S^=$	20	19	3	243	924
Total Organic Nitrogen	18	18	50	1460	5600
Ca	17	17	2.22	12.6	66.9
Mg	17	17	0.175	6.8	35.1
Na	18	18	1.51	31.2	73.3
Al	17	17	0.261	13.6	36.1
Mn	18	15	0.007	0.64	2.59
V	17	12	0.003	0.08	0.21
B	17	17	0.63	132	374
Ba	17	14	0.046	0.23	0.4
Mo	17	4	0.036	0.10	0.143
Sn	17	9	0.05	0.64	1.63
Y	17	1		0.01	
Co	17	8	0.01	0.06	0.08
Fe	18	18	0.146	74.2	230
Ti	17	15	0.004	0.23	0.52

4.2.5 COMPARISON TO OTHER SOURCES

The average data on general quality parameters from effluents in this study are compared to effluents from other processes in Table 4-8. Data on the Chapman, the synthetic process which is similar to low-Btu gas production, have similar effluents. The Lurgi process also is similar but somewhat lower in concentration. Coke oven operation is lower as would be expected because of low volatile coal and higher air usage.

4.2.6 EFFECT OF OPERATING PARAMETERS

As discussed in Section 3, operating parameters such as temperature, pressure, bed type, steam/air ratio, air/coal ratio, and coal type will effect the constituents in the raw product gas and thus the quench/scrubbing waters and ash sluice waters. In general, these parameters will not have a significant enough effect on the wastewater quality so as to change the general treatment requirements. It would not be expected, for example, that phenol concentrations could be reduced to the point that dephenolization was not necessary or that ammonia concentration could be reduced so that ammonia removal was not needed, although there might be considerable variation in concentration.

Since operating variables interact, they can be fully discussed by mathematical modeling of the reaction system. However, some trends are generally accepted and are discussed here along with observation from the sampling data.

Temperature

As temperature is increased, the rate of decomposition of high molecular weight materials is increased and lower concentration of these constituents can be expected. The operating temperature range of most is not sufficient to have a major effect.

Pressure

High pressure favors the formation of hydrogen cyanide. Also, high pressure should improve the efficiency of the quench scrubbing system removing a high percentage of high boiling organics from the gas resulting in slightly higher concentrations in the wastewater.

The low-Btu gas effluent sampling program was set up to obtain data from gasifiers operating at atmospheric pressure and at elevated pressures. Two gasifiers tested were at atmospheric pressure and two at 100-300 lb/in^2g.

TABLE 4-8

WATER QUALITY PARAMETERS FOR THREE COAL CONVERSION AQUEOUS PROCESS WASTEWATERS

Water Quality Parameters (mg/l)	Aqueous Process Wastewaters				
	Lurgi*	Chapman*	Synthane**	Coke Oven*	Low-Btu Gas
BOD	12,200	15,900	--	3,420	25,000-2,000
COD	20,200	28,500	15,000	4,860	62,300
TOC	6,490	9,430	--	6,160	12,800
NH_3-Nitrogen	4,340	8,130	--	2,850	8,960
Total Kjeldahl Nitrogen	4,010	9,420	8,100	3,160	9,830
Phenol	3,030	2,130	2,600	1,140	927
Oil and Grease	917	540		700	1,490
Cyanide	<0.02	59	--	69	106
Thiocyanate	83	1,450	152	570	1,440
Sulfide	<10	207	--	241	243
TDS	2,010	48,600	--	4,870	38,300

*Source: Reference No. 3

**Source: Reference No. 24

The quantity of data and the variability preclude making a definitive comparison of the wastewaters from the two pressures. However, comparison of the data does indicate that low pressure gasifiers may have more dilute wastewaters. Table 4-9 compares the data for selected parameters for high and low pressure gasifiers. For a number of parameters the low pressure samples are less concentrated. It is probable that this reflects operation of the low pressure systems at higher steam-to-carbon ratios thus producing a greater quantity of condensate which would have lower concentrations. It also appears possible that pressurized systems will condense a greater percentage of the organics present.

Air/Coal Ratio

The increased addition of air will result in a higher combustion of organics resulting in a lower concentration of high molecular weight materials in the wastewater.

Steam/Air Ratio

Excess steam is condensed in the quench water so that steam/air ratio has a significant effect on the concentration of pollutants in the quench water.

Bed Type

The bed type can have a significant effect on wastewater. In fixed bed gasifiers, volatile components are driven off of the coal before oxidation takes place. Thus, little of these materials are oxidized and they largely go into the wastewater in the quench step. In fluid bed or entrained bed gasifiers, the coal is dispersed and more volatile materials are burned in the gasifier resulting in lower quantities in the quench water.

Coal Feedstock

In general, coals with lower volatiles will result in lower levels of pollutants; anthracite coal pollutants are less than bituminous, bituminous is less than subbituminous, and subbituminous is less than lignite. Data from the Fort Snelling gasifier for two lignite coals and one subbituminous coal support this general relationship.

Table 4-9

Comparison of High Pressure and Low Pressure Pollutant Levels

	High Pressure Range (mg/l)		Low Pressure Range (mg/l)	
	Minimum	Maximum	Minimum	Maximum
BOD	340	72000	1300	25000
Oil and Grease	145	1355	275	1490
TSS	28	5130	17	1030
TOC	6000	28200	207	10100
COD	25000	124000	11500	78200
Phenolics	20	6330	0.7	1900
Cl	6280	24300	26	2200
TS	48200	83900	2310	67600
TVS	6720	72800	89	56900
TDS	46000	83000	978	61800
CN	7	6970	0.2	35
NH_3	402	23800	37	10300
$S^=$	101	305	4	924
Benzene	2130	2780	288	1050
2,4-Dimethylphenol	1820	12600	32	16700
Naphthalene	514	82700	378	36300
Phenol	44400	355000	322	90000
Anthracene	123	2830	14	310
Phenanthrene	329	10300	28	824

4.3 ASH SLUICE WATER

Ash sluice or ash quench water is the overflow liquid from wetting the ash which has been removed from the gasifier as a solid. This stream usually has a high level of total and dissolved solids from the large amount of inorganic salts in the ash. Metals concentrations, in general, reflect the metals content of the coal. The volume of water generated is low.

The only facility that quenched the ash was Ft. Snelling. Here ash from the gasifier is sluiced for disposal. Also, the dust collected by a cyclone was removed in a water bath below the cyclone. Both waste streams were sampled during all three sample episodes. Data are presented in Tables 4-10 through 4-19.

The Ft. Snelling sluice waters are much lower in organics than the gas quench waters - generally by a factor of 10^3 or 10^4. Mean values are generally less than the detection limit.*

Organic concentrations in the cyclone quench water are somewhat higher than the ash sluice waters but still generally lower than the gas quench liquor - generally by a factor of 10^3.

Metals are not much different in concentration between the ash sluice and the gas quench waters. Cyclone quench waters are lower (by a factor of 10) in metals concentration than either of the other waste streams.

BOD is much lower (close to that of domestic sewage) in both the ash sluice and cyclone quench waters than in the gas quench liquor.

While the pH's of all waste streams tend to be slightly basic, the ash sluice water is more so - averaging 11.4 units. TSS of course is much higher for the ash sluice waters - ranging from 281-15,700 mg/l.

Other nonconventional concentrations for the cyclone quench and the ash sluice are somewhat similar. These wastewaters are generally lower in the organic parameters (such as COD, phenolics, and TVS) than are the quench waters. These wastewaters are also low in nitrogen.

---

*The detection limit for organic priority pollutants is 10 mg/l. This level is the minimum concentration below which the signal-to-noise ratio was of sufficient magnitude to give a quantifiable value for the specie concentration.

Table 4-10

Priority Organic Pollutants Detected
In the Ash Sluice Water (ug/l)

Pollutant	No. of Samples	No. of Detects	Min	Mean	Max
2,4,6 Trichlorophenal	14	2		2	
p-chloro-m-cresol	14	4	1	2	5
2,4,Dimethyl Phenol	14	4	1	10	30
2,4,Dimitrotolnone	14	3	1	1	1
Fluoranthene	14	1		1	
Methylene Chloride	14	13	1	79	317
Isophorone	14	1		1	
Naphtalene	14	2	1		4
2-Nitrophenol	14	2		2	
4-Nitrophenol	14	1		38	
4,6-Dinitro-o-cresol	14	2	3		38
N-nitrosophenylamine	14	2		2	
Pentachlorophenol	14	2	18		19
Phenol	14	11	3	26	171
Bis (2-ethylhexyl) phthalate	14	2	4		373
Di-n-butyl phthalate	14	4	1	1	2
Di-n-octyl phthalate	14	3	2	5	10
Diethyl phthalate	14	3	2	2	2
Benzo(a)anthracene	14	3	1	1	2
Chrysene	14	1		1	
Anthracene	14	2	1	1	1
Phenonthrene	14	3	1	1	1
Pyrene	14	1		1	
Trichloroethylene	14	1		50	
Tetrachloroethylene	14	10	1	10	21

Table 4-11

Priority Metals Detected in the Ash Sluice Water (ug/l)

Pollutant	No. of Samples	No. of Detects	Min	Mean	Max
Sb	14	6	2	48	250
As	14	13	3	898	3500
Be	14	12	1	17	50
Cr	14	11	33	212	890
Cd	14	8	7	19	41
Cu	14	14	30	353	972
Pb	14	10	3	122	350
Hg	14	7	0.1	0.6	2.1
Ni	14	12	5	520	1750
Se	14	8	2	51	144
Ag	14	8	1	2	4
Tl	14	3	1	2	3
Zn	14	14	23	410	1110

Table 4-12

Nonconventional Organic and Appendix C Pollutants Detected in the Ash Sluice Water (ug/l)

Pollutant	No. of Samples	No. of Detects	Min	Mean	Max
Methyl ethyl ketone	14	6	<1	1	3
Acetone	14	9	<1	9	23
Benzoic Acid	14	1		19	
n-Dodecand	14	2	1		15
x-picoline	14	1		43	
Biphenyl	14	2	<1		2

Table 4-13

Nonconventional Pollutants Detected in the Ash Sluice Water (mg/l)

Pollutant	No. of Samples	No. of Detects	Min	Mean	Max
Acidity	14	5	75	550	1520
Alkalinity	14	14	151	1570	3270
HCO3	14	3	24	462	1310
CO3	14	14	111	846	1860
TOC	14	12	2.8	12.5	30.6
COD	13	13	32	276	1010
Phenolics	12	1		2.8	
Br	14	1		0.2	
Cl	13	13	3.2	30	112
F	14	14	0.6	1.3	239
Total Solids	14	14	2520	25900	77400
Total Volatile Solids	14	14	129	930	3700
Total Volatile Susp. Solids	14	14	26	351	930
Total Dissolved Solids	14	14	272	18000	60590
CN	14	2	0.02	0.02	0.02
SCN	14	9	1	3.6	8.4
CN/Cl2	12	6	0.02	0.03	0.1
Kjeldahl Nitrogen	14	13	1	5.5	11
NH3	14	11	1	3	6
NO3	13	8	0.02	1.7	5.9
NO2	13	9	0.03	0.05	0.12
PO4	14	13	0.09	11.4	101
SO4	14	14	52	23400	85000
SO3	14	11	7	297	870
S	14	13	3	36	139
Total Organic Nitrogen	14	11	0.1	4.3	11
Ca	14	14	104	845	1790
Mg	14	14	5.8	156	753
Na	14	14	10.7	4800	15700
Al	14	14	7.5	282	1100
Mn	14	14	0.062	1.55	4.09
V	14	14	0.012	0.48	1.07
B	14	14	1.97	16.8	50.6
Ba	14	14	0.3	1.65	4.77
Mo	14	9	0.15	1.80	5.27
Sn	14	8	0.14	0.39	0.73
Y	14	9	0.007	0.103	0.30
Co	14	7	0.069	0.157	0.30
Fe	14	14	7.7	293	1340
Ti	14	14	0.32	11.8	32.7

Table 4-14

Conventional Pollutants Detected in the Ash Sluice Water (mg/l)

Pollutant	No. of Samples	No. of Detects	Min	Mean	Max
pH	14	14	9.6	11.4	12.5
BOD5	14	14	<1	150	570
Oil and Grease	14	14	<1	17	91.8
TSS	14	14	281	4820	15700

Table 4-15

Priority Organic Pollutants Detected
In the Cyclone Quench Water (ug/l)

Pollutant	No. of Samples	No. of Detects	Min	Mean	Max
Acenaphthene	16	7	<1	1	4
Benezene	16	3	60	121	162
2,4,6-Trichlorophenol	16	2	<1		49
p-chloro-m-cresol	16	5	6	15	31
Chloroform	16	1		21	
2,4-Dichlorophenol	16	1		11	
2,4,Dimethylphenol	16	16	34	483	1540
2,4,Dinitrotoluene	16	3	<1	4	8
2,6-Dinitrotoluene	16	1		2	
1,2-Diphenylhydrazine	16	3	5	11	19
Ethylbenzene	16	6	<1	4	8
Fluoranthene	16	9	<1	77	655
Methylene chloride	16	15	5	116	1020
Methyl chloride	16	1		24	
Isophorone	16	3	9	15	18
Naphtalene	16	15	10	139	1550
4-Nitrophenol	16	4	<1	1	3
2,4-Dinitrophenol	16	1		41	
4,6-Dinitro-o-cresol	16	4	<1	16	55
N-nitrosophenylamine	16	6	4	11	23
Pentachlorophenol	16	4	<1	42	152
Phenol	16	16	170	2570	5760
Bis (2-ethylhexyl) phthalate	16	3	<1	2	4
Di-n-butyl phthalate	16	9	<1	6	23
Di-n-octyl phthalate	16	3	31	66	86
Diethyl phthalate	16	4	2	5	9
Benzo(a)anthracene	16	5	<1	4	10
Benzo(a)pyrene	16	3	<1	2	4
Chrysene	16	6	<1	2	5
Anthracene	16	11	2	7	36
Fluorene	16	14	2	11	34
Phenanthrene	16	12	2	11	41
Pyrene	16	12	<1	4	2
Toluene	16	3	<1	20	59

Table 4-16

Priority Metals Detected in the
Cyclone Quench Water (ug/l)

Pollutant	No. of Samples	No. of Detects	Min	Mean	Max
Sb	16	7	1	1	
As	16	15	4	24	4
Cr	16	15	3	14	100
Cd	16	8	2	27	23
Cu	16	12	6	18	100
Pb	16	10	7	48	30
Hg	16	4	0.1	0.1	164
Ni	16	5	8	36	0.2
Se	16	15	1	28	76
Ag	16	10	1	2	150
Zn	16	13	39	72	3

Table 4-17

Nonconventional Organic and Appendix C
Pollutants Detected in the Cyclone
Quench Water (ug/l)

Pollutant	No. of Samples	No. of Detects	Min	Mean	Max
Methy ethyl ketone	15	15	7	100	533
Acetone	15	15	76	320	3600
Dibensofuran	15	15	4	67	180
n-Dodecane	15	15	7		19
-Terpinol	15	15	8		10
-Picoline	15	15	19	88	347
Biphenyl	15	15	2	13	70
Hexanoic Acid	15	15		1	

Table 4-18

Conventional Pollutants Dectected in the Cyclone Quench Water (mg/l)

Pollutant	No. of Samples	No. of Detects	Min	Mean	Max
pH	16	16	6.4	7.3	8.6
BOD	16	13	46	160	540
Oil & Grease	16	7	2.9	20	59
TSS	16	16	16	309	1468

Table 4-19

Nonconventional Pollutants Detected
In the Cyclone Quench Water (mg/l)

Pollutant	No. of Samples	No. of Detects	Min	Mean	Max
Acidity	16	6	8	72	150
Alkalinity	16	16	35	141	392
HCO3	16	16	35	136	392
CO3	16	2	16		41
TOC	16	16	3	67	258
COD	16	16	32	250	506
Phenolics	16	13	0.006	1.96	22.7
Br	16	1		1.03	
Cl	16	15	1.32	10.5	47
F	16	16	1.2	2.22	7.3
Total Solids	15	15	248	728	2656
Total Volatile Solids	15	15	35	352	1032
Total Volatile Susp. Solids	16	16	10	214	964
Total Dissolved Solids	15	15	156	338	784
CN	16	12	0.03	0.09	0.34
SCN	16	8	1	4.2	8.6
CN/Cl2	16	16	0.02	0.1	0.265
Kjeldahl Nitrogen	15	15	8	18	38
NH3	15	15	1	8.3	25
NO3	15	11	0.15	1.3	2.7
NO2	14	8	0.02	0.09	0.45
PO4	16	16	0.04	0.74	3.68
SO4	13	13	17	70	182
SO3	16	6	1.1	3.8	14
S=	16	16	2	5.7	32
Total Organic Nitrogen	15	15	2	9	23
Ca	16	16	19.8	31.2	89.1
Mg	16	16	3.69	6.89	18.2
Na	16	16	5.13	35.2	104
Al	16	16	0.6	5.55	23.2
Mn	16	16	0.042	0.072	0.216
V	16	14	0.003	0.013	0.038
B	16	14	0.144	0.546	1.2
Ba	16	15	0.075	0.842	3.8
Mo	16	4	0.036	0.16	0.5
Sn	16	10	0.035	0.056	0.082
Y	16	1		0.007	
Co	16	0			
Fe	16	16	1.48	7.22	30.8
Ti	16	16	0.009	0.177	0.472

4.4 ACID GAS REMOVAL

Operation of the four gasifiers sampled did not generate effluents appropriate for sampling from the acid gas removal systems as these operations were not purged on a steady state basis. Pollutants from acid gas removal systems largely depend on the degree of gas clean-up before entering the acid gas removal system and on the type of system used. In general, if a clean gas is used, there is no effluent from the process (8).

SECTION 5

TREATMENT TECHNOLOGY

Low-Btu gasification wastewaters present treatment problems not routinely encountered by normal wastewater treatment plants. As shown by the four gasifiers sampled and presented in Section 4, low-Btu gasifier wastwaters contain high concentrations of phenolics, ammonia, sulfur compounds, and organics (some of which are priority pollutants) as well as high solids and trace concentrations of heavy metals.

This section describes the treatment of low-Btu gasification gas quench waters. The information is based primarily on the results from an EPA wastewater treatability study performed on-site at a low-Btu gasifier. After a complete literature search, bench scale study, and application of information from other industries, the treatment units in this study were designed, constructed, and operated.

This section also lists those studies that have been or are being performed on low-Btu gasification wastewaters after completion of this treatability study (after 1981).

5.1 SCOPE OF THE EPA TREATABILITY STUDY

The low-Btu gasifier wastewater treatability study was conducted in three phases. Phase I was a comparison of low-Btu wastewater characteristics with those of analogous industries to determine applicable treatment technologies (12). Phase II was a six-week operation of a bench-scale system, the results of which were used to derive design and operating specifications for the pilot-scale unit (48).

Phase III was the construction and operation of an on-site pilot-scale wastewater treatment plant at a commercial low-Btu gasifier (30). Operation of this plant was for two months. An extensive sampling and analysis program was conducted during the pilot plant operation in order to monitor pollution removal efficiencies of each treatment unit. The data from Phase III confirmed the position, developed during the study of analogous industries, that low-Btu gasifier wastewater is similar to that produced at coke plants and the basis for the treatment of the two is similar.

Certainly all treatment technologies have not been explored and others may be applied with equal or better success. The purpose of using the selected treatments is to demonstrate the levels of removal that can be achieved by technologies proven in commercially operating industries.

5.2 THE EPA TREATABILITY STUDY SITE

The pilot plant treatability study was performed at the Holston Army Ammunitions Plant low-Btu gasifier (described in Appendix A). This facility was commercially operating at the time the study was perfomed and employed the Wilputte-Chapman gasification technology. It is also one of the four gasifiers sampled and discussed in Section 3. The wastewater for this study was recycled quench liquor from a series of three gas scrubbers. The scrubber water was collected in a decanter tank where tars settle to the bottom of the tank and are removed periodically. Excess quench liquor is periodically sent to an evaporator for disposal. However, during the treatability study, ths excess (which amounted to approximately 300-1,000 gpd) was routed to the wastewater pilot plant for treatment.

5.3 PILOT PLANT DESCRIPTION

The treatment systems were sized for the minimum daily volume of water that would be available from the gasifier during the study period (about 300 gpd). Consequently, those units to be operated continuously were sized for a flow of 300 gpd or 0.2 gpm. Units that could operate on a batch basis were sized larger to more closely reflect larger commercially operating systems. These units, described below, were the ammonia columns and dephenolization units sized at 3 gpm.

The processes selected for use in the pilot plant were:

Pretreatment

- Roughing Filter
- Dephenolization
- Ammonia Stripping

Secondary/Tertiary Treatment

- Biological Oxidation
- Multi-Media Filtration
- Carbon Adsorption Polishing

Each of these treatments is described in detail in Reference No. 30: Low-Btu Gasifier Wastewater Treatability: Phase III Pilot

Plant Study at Holston Army Ammunitions Plant. The treatment processes are described here briefly. The schematic flow is shown in Figure 5-1.

5.3.1 ROUGHING FILTER

The roughing filter consisted of a cylindrical bed of coal used primarily to remove globules of tar and or pitch. The raw wastewater is passed through the bed. When the bed ceases to remove material from the stream (due to clogging by the tar), it is removed and disposed of by feeding the coal into the gasification process. Thus, the advantage to this treatment step is that there is no secondary waste created. The operation is shown in Figure 5-2.

5.3.2 DEPHENOLIZATION

Phenols were removed using a solvent extraction process. In the first stage the phenol laden wastewater comes in contact with a countercurrent flow of solvent, benzol in this case. The solvent extracts most of the phenol and some other organics. In the second stage the phenol-laden solvent comes in contact with a caustic solution which extracts the phenols so that the solvent can be recycled. Other solvents can be used besides benzol. The system is shown schematically in Figure 5-3.

5.3.3 AMMONIA STRIPPING

Ammonia stripping removes ammonia from the wastewater by vaporization. The wastewater is passed through a column countercurrent to a stream of steam. Ammonia is stripped from the liquid and taken off with the vapor. In the pilot plant the vapors were condensed forming a concentrated ammonia solution. Some organic material is also volatilized and removed with the ammonia.

In water, ammonia exists both as free ammonia and as ammonium ion (fixed ammonia). The ratio of free ammonia to ammonium ion is determined by the pH. At low pH, essentially all of the ammonia is present as ammonium ion (fixed ammonia.) At high pH (above 9.8), essentially all of the ammonia is present as free ammonia. Only the free ammonia can be removed by stripping which is why the pH must be raised.

In the pilot plant, ammonia stripping was done in two stages as shown in Figure 5-4. The first stage stripped the wastewater without adjustment of the pH. This free ammonia still removed that portion of the ammonia that was free in the wastewater

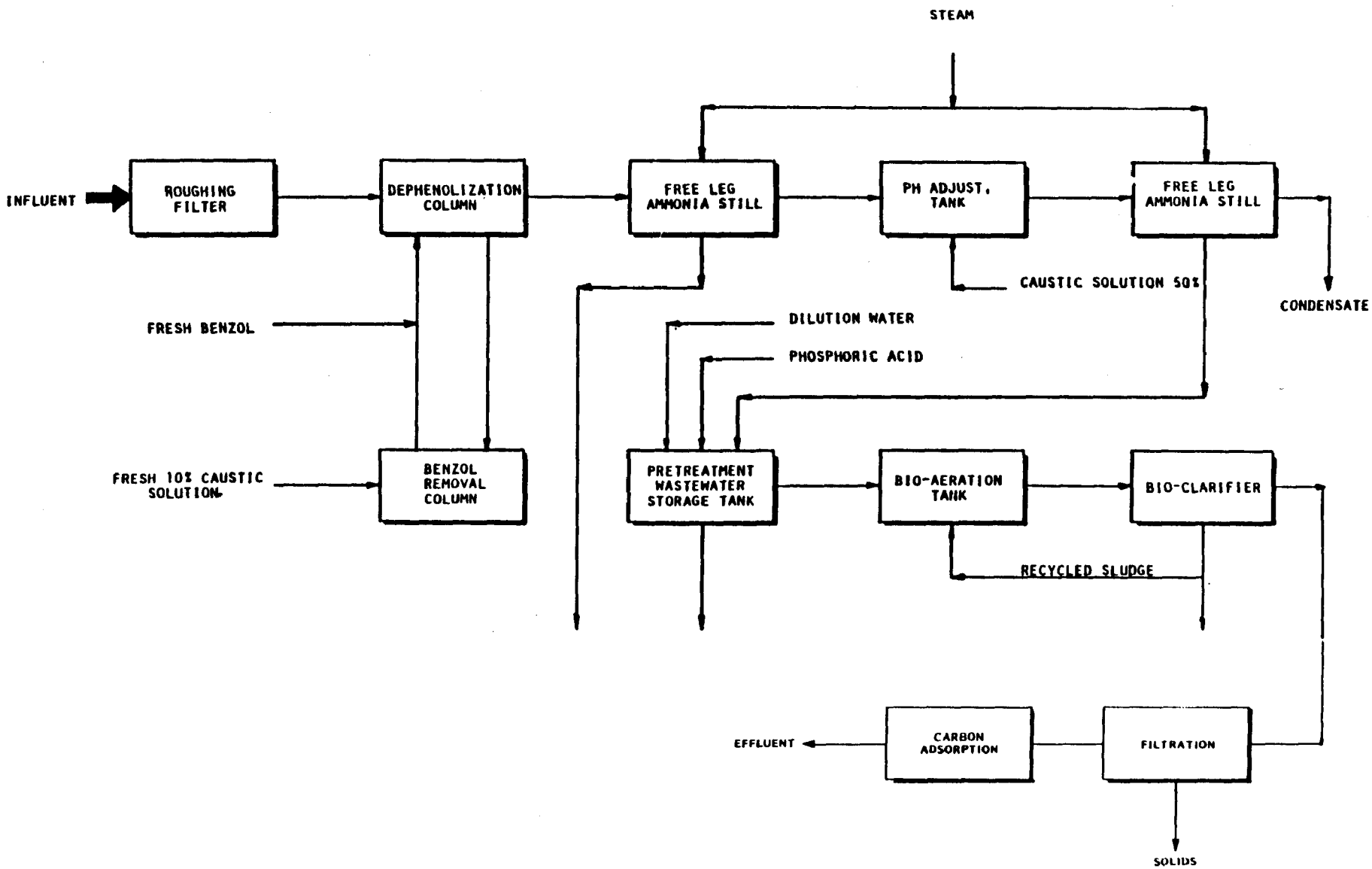

Figure 5-1. Schematic Flow Diagram

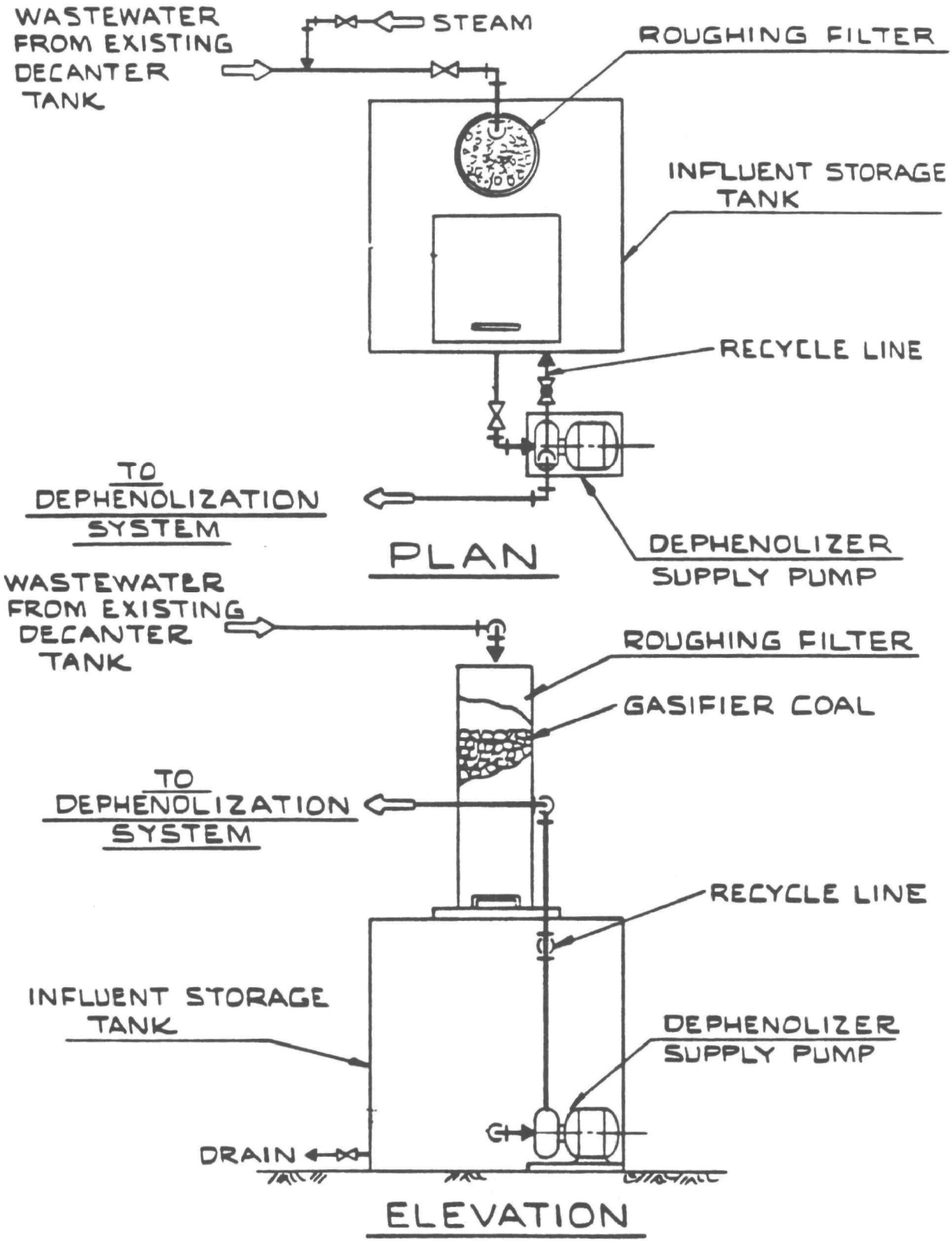

Figure 5-2. Roughing Section Filter

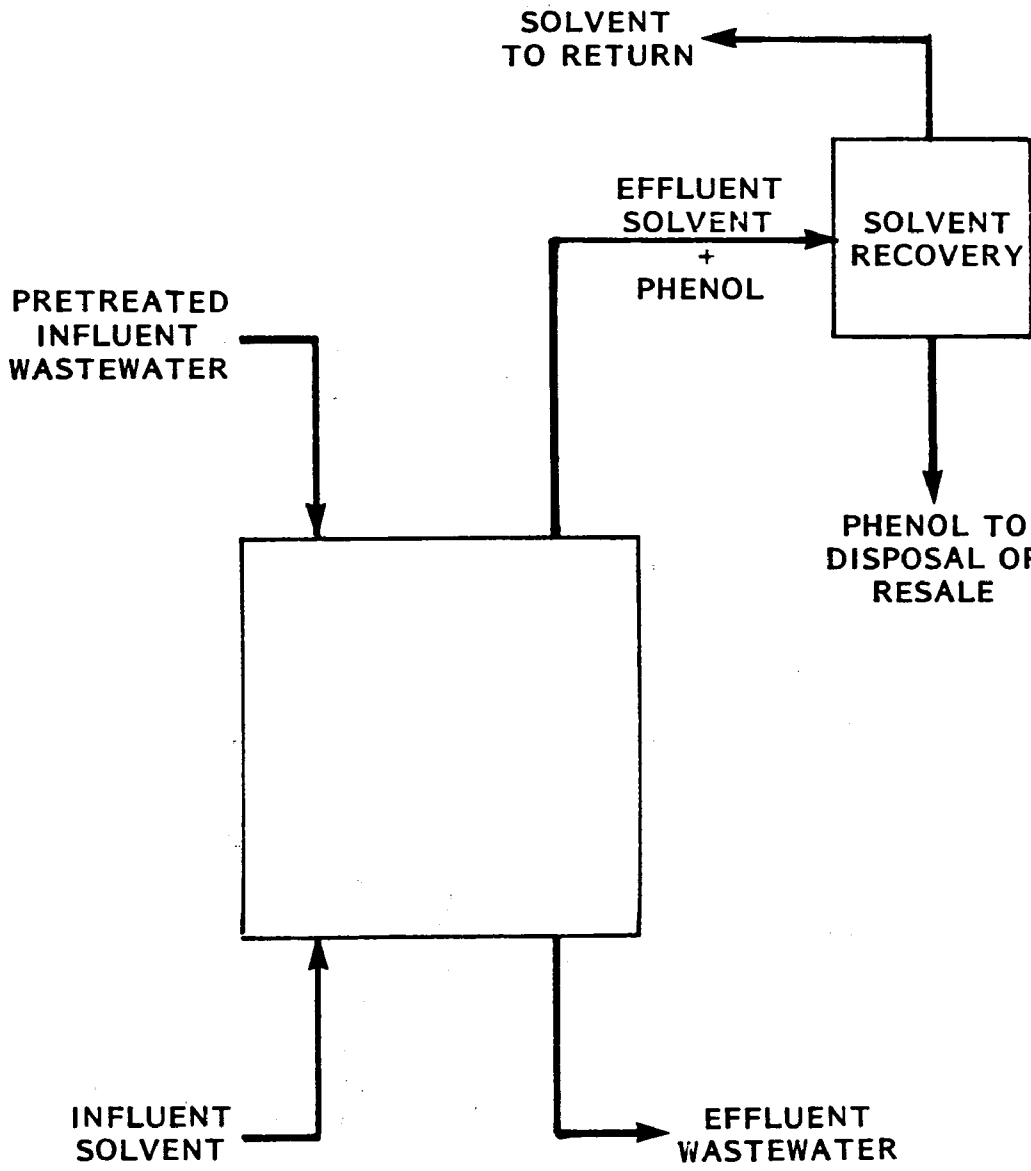

Figure 5-3. Dephenolizer

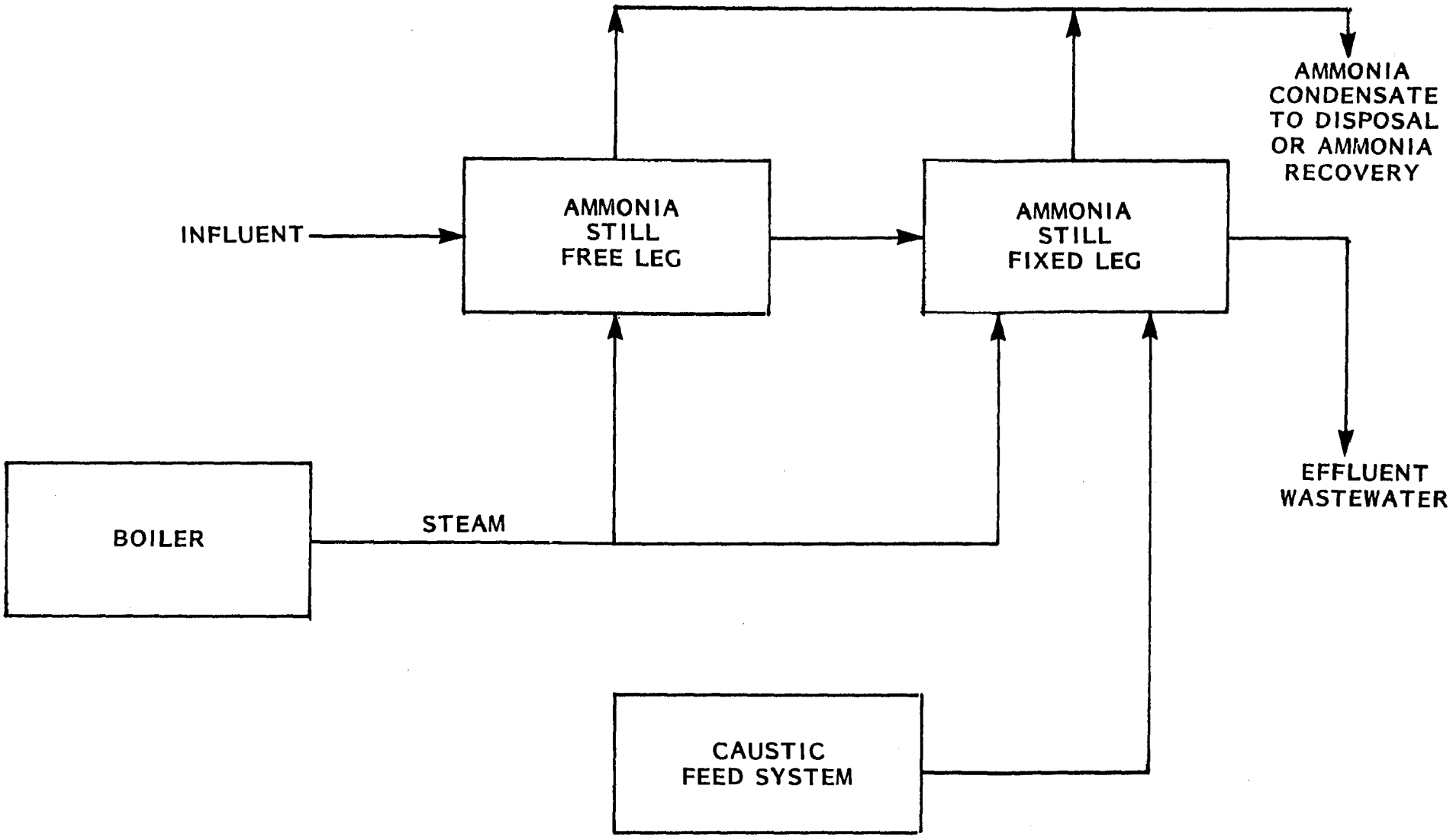

Figure 5-4. Ammonia Still

before pH adjustment. The pH of the wastewater was then raised releasing the fixed ammonia. A second stripping was then performed removing the fixed ammonia.

5.3.4 BIOLOGICAL OXIDATION

The biological oxidation unit was an activated sludge unit consisting of an aeration tank and a settler. The wastewater is brought into the aeration tank where the biomass digests biologically oxidizable organic matter. The settled solids from the settler are recycled to the aeration tank with any excesses purged. The unit is shown schematically in Figure 5-5. The raw wastewater was introduced into the "seed" sludge at 10 percent dilution intervals until a 50 percent dilution was reached. This was done in an attempt to slowly stabilize the system.

5.3.5 GRANULAR - MEDIA FILTRATION

Granular media filtration consisted of a filter column filled with gravel, sand, and anthracite coal in three separate layers. The wastewater was passed through the filter to remove suspended solids that existed after settling from biological oxidation. When flow rates reduced, the filter was backwashed and agitated with compressed air. The backwash was collected and recycled to the feed. The unit is shown in Figure 5-6.

5.3.6 CARBON ADSORPTION

The carbon adsorption unit, used to remove residual organic pollutants, consisted of a column filled with activated carbon. When the activity of the carbon is reduced, it is replaced with reactivated material. Absorption resin was also tested instead of activated carbon. The activated carbon unit is shown in Figure 5-6 with the multimedia filtration.

5.4 SAMPLING AND ANALYSIS

Sample points were established before and after each treatment step. On-site analyses for process control included pH, alkalinity, TSS, TDS, settleable solids, phenol, ammonia, TOC, COD, and chlorides. These were taken daily. In addition to these, the priority pollutants, and other parameters such as TVS, TKN, nitrate, phosphorus, TCN, SCN, sulphates, and sulphites, were collected twice a week and sent off-site to EPA contract laboratories for analysis.

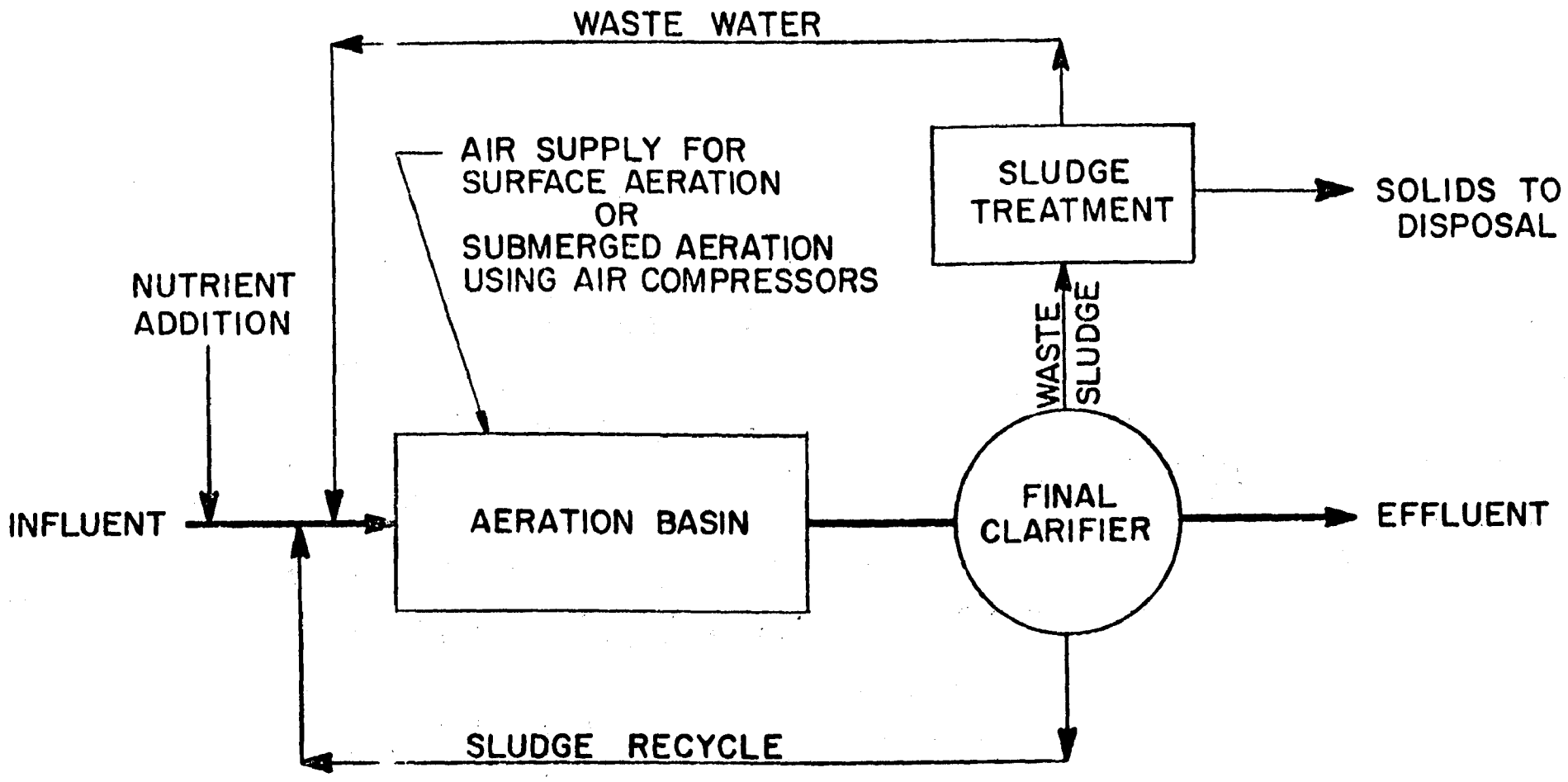

Figure 5-5. Activated Sludge

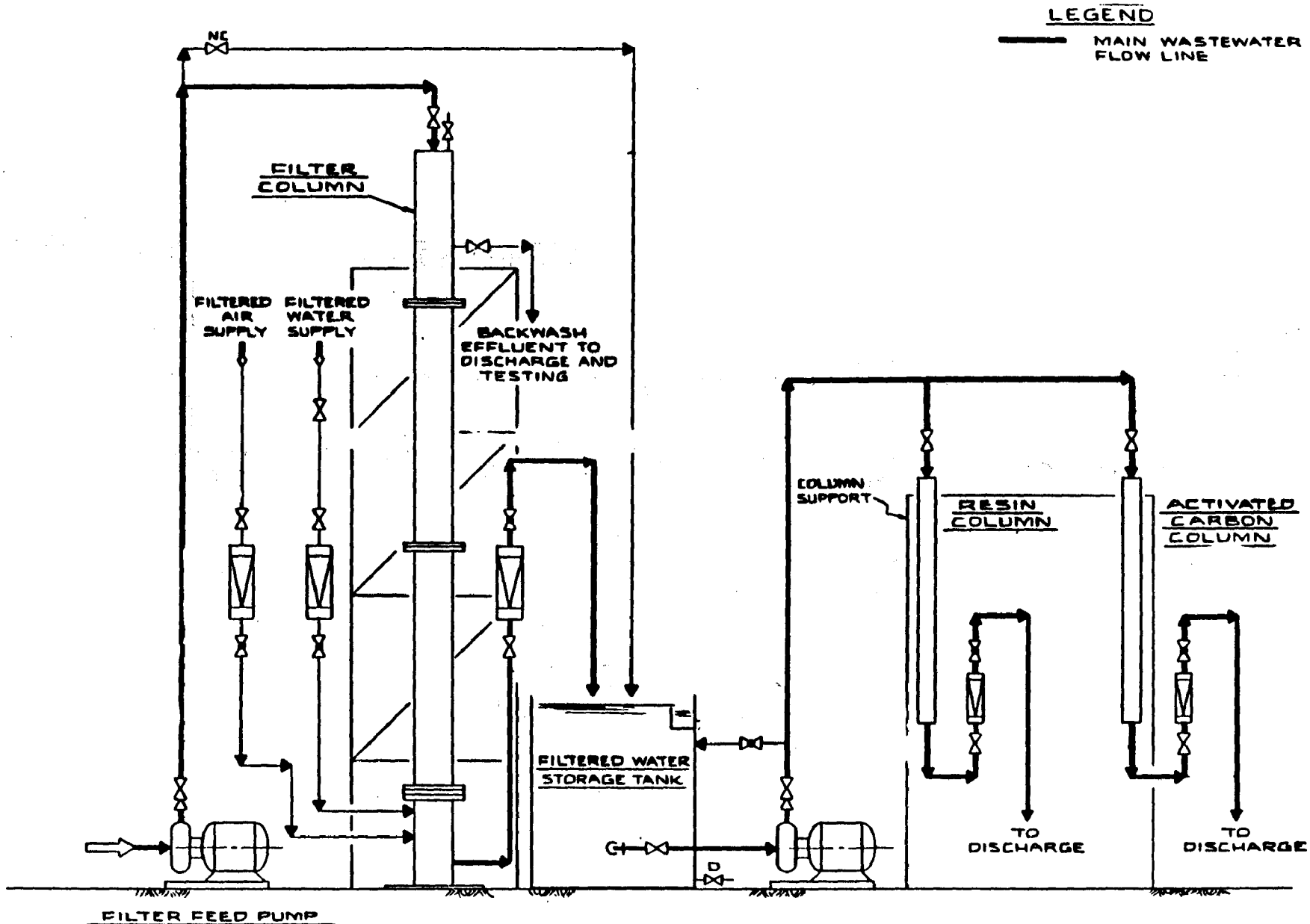

Figure 5-6. Effluent Polishing

5.5 RESULTS

The effect of the pretreatment system is evaluated in terms of chemical oxygen demand (COD), total organic carbon (TOC), ammonia and phenols. The secondary treatment system is evaluated in terms of biochemical oxygen demand (BOD), TOC, and COD.

5.5.1 PRETREATMENT

The effect of the pretreatment operations is shown graphically in Figure 5-7 which shows the average effect of each step and the overall effect of the combined treatment. Overall, the pretreatment train was quite successful.

5.5.2 BIOLOGICAL OXIDATION

A graphical presentation of pollutant removals across the bio unit is shown in Figure 5-8. Considerable reduction in BOD and other parameters was obtained, yet full stabilization was not achieved, even at 50 percent dilution. However, as shown by Figure 5-8, BOD reductions began to increase with time, indicating that stabilization might have been achieved with additional operation time.

Phenols were reduced by an average of 88 percent and thiocyanate was reduced by an average of 52 percent. COD and TOC removals were very erratic, ranging from no removal to 44 percent and 64 percent reduction, and averaging 35 percent and 24 percent reduction, respectively. Ammonia concentrations increased across the system in 42 percent of the analyses. This may be partially attributable to the breakdown of cyanide compounds, including thiocyanate, which is typical in the treatment of this type of wastewater.

Average suspended solids in the effluent (after reaching 50 percent dilution) were 265 mg/l and the average suspended solids in the effluent were 674 mg/l. This was due to poor settling in the clarifier, primarily a result of the suspended colloidal nature of the solids as discussed in Section 5.6, entitled "Problems Encountered."

MLSS in the aeration tank ranged from 490 mg/l (on December 29) to 6280 mg/l (on November 27), averaging 2774 mg/l. This average solids concentration was less than the target level of 5000 mg/l due to the lack of proper solids settling in the clarifier, which, consequently, produced insufficeint solids in the recycled sludge. Average sludge age was 21 days based on the equation:

$$\text{Sludge age} = \frac{\text{MLSS x Aeration Period (days)}}{\text{Influent SS}}$$

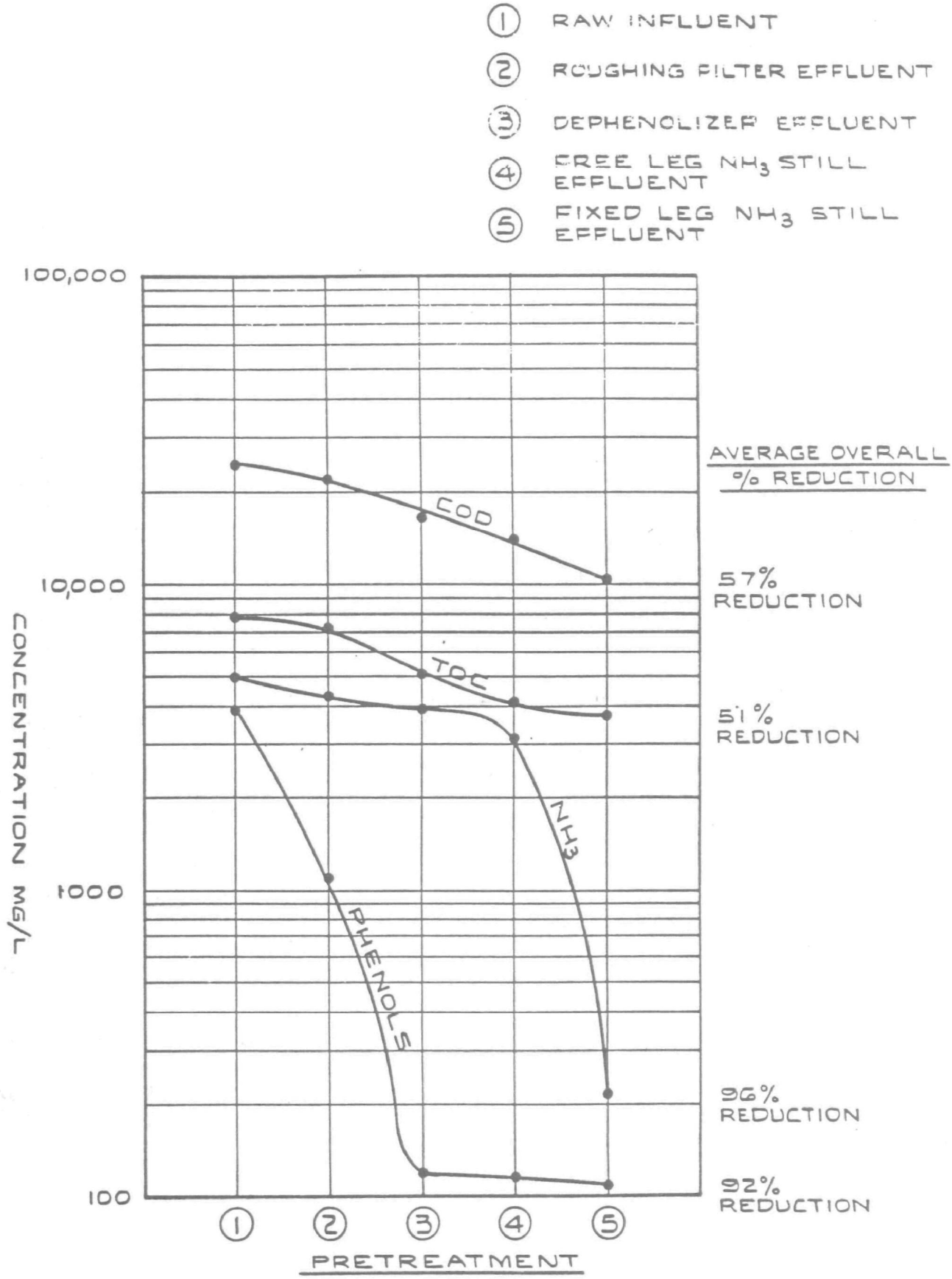

Figure 5-7. Performance of Pretreatment Units

Figure 5-8. PERCENT REDUCTION IN BOD, TOC & COD ACROSS BIO-UNIT @ 50% GASIFIER DILUTION

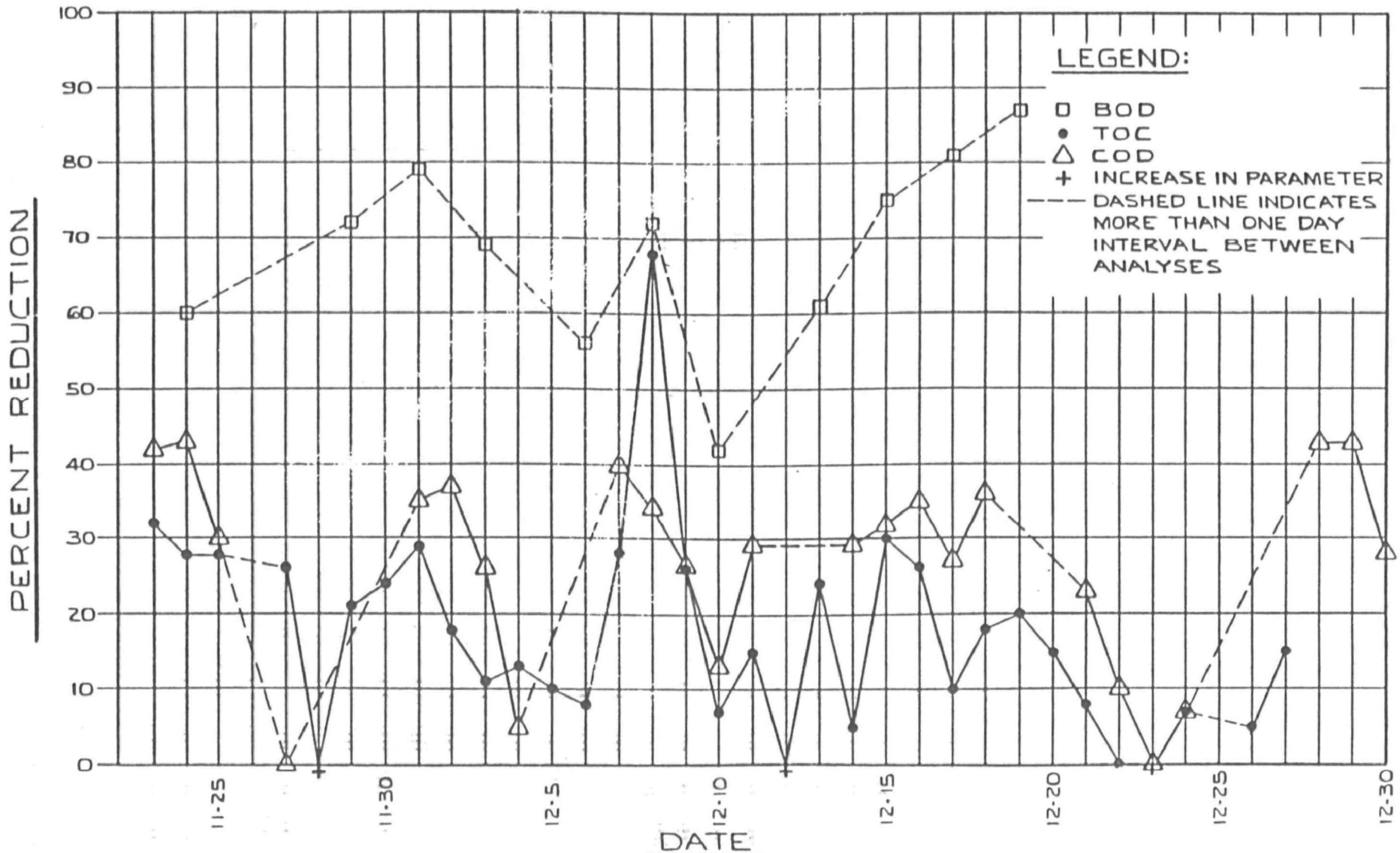

When considering this parameter, it should be noted that problems occurred with the sludge used for seed and with foaming, which affected the MLSS concentrations. These problems, their causes and possible solutions, are also presented in Section 5.6.

5.5.3 GRANULAR-MEDIA FILTRATION

The granular-media filter was not effective in reducing total suspended solids to less than 20 mg/l, the target level. Average filter effluent TSS were 304 mg/l, which is a 43 percent reduction. TOC and COD reductions averaged 30 percent and 14 percent, respectively.

The difficulty in filtering the solids also was attributed to the nature of the influent suspended particles rather than problems with the operation of the filter.

5.5.4 ADSORPTION

The carbon and resin coolums were both effective in further reduction of the TSS remaining in suspension after filtration by 41 percent and 61 percent, respectively. However, the removal of TSS is not the function of adsorption units and the presence of high TSS in the influent to these units normally interferes with their proper operation.

The color of the wastewater was not noticeably affected by the adsorption system and remained the same brownish/black color of the influent wastewater. This was attributed to the colloidal suspended material remaining in the effluent.

Overall, the activated carbon was slightly more effective in reducing TOC and COD than the resin.

5.5.5 OVERALL TREATMENT EFFICIENCY

The color of the treated wastewater was not significantly different from the raw Holston wastewater and remained a dark brownish/black. Average suspended solids had increased in the treated water, presumably due to the poor settleability of the wastewater discharging the biological unit. Since the solids did not settle in the biological system clarifier, they were of a nature that precluded their effective removal in the granular-media filter. However, the concentration of dissolved solids in the final effluent was reduced by about 77 percent.

Table 5-1 shows parameter reductions across the entire pilot plant. They do not represent either minimum, maximum, or average treatment levels that should be expected, but are a presentation of the actual performance obtained during the treatability study.

Table 5-1
Effect of Overall Treatment System

Parameter	% Reduction(1)
TSS	72 (increase)
TDS	77
TOC	88
COD	92
Ammonia	99
Phenols	99.8

(1) Reduction in parameter concentration, feed concentration less final effluent concentration divided by feed concentration times 100.

5.6 PROBLEMS ENCOUNTERED

Several problems were encounterted during the operation of the pilot plant which impaired the removal of pollutants. These problems are summarized below:

- TSS increased across the roughing filter - This increase may have been due to the breakdown of the media (coal) used for the filter. However, bench scale tests performed to investigate this problem were inconclusive. Attempts to correct this problem for commercial operation may be either to use a different filter medium or to install a settling tank or clarifier after the filter.

- Tar deposited on the media in the dephenolizer columns - Apparently, tar remaining even after rough filtration was enough to agglomerate on the dephenolization columns. While the build-up was not enough to impair efficiency of the columns during its operation, it may cause difficulties in longer operating commercial operations. Scheduled backwashing may be necessary or cooling of the raw waste-

water before or after rough filtration followed by precipitation of additional tar-like substances may be performed.

- Foaming in the ammonia still - This caused a carryover of wastewater in the steam condensate, particularly in the free leg. This problem only occurred when the pH was high from the dephenolization units. Proper pH control should eliminate this problem.

- Biological oxidation stabilization - The most perplexing difficulty encountered during operation of this pilot plant was the stabilization of the biological oxidation units. Due to problems with several of the sludges used for seed, the unit had to be restarted twice during the pilot plant period. Sufficient time to completely stabilize the unit was not available as a result.

  The adaptability of the final sludge used for seed was evidenced by the increased BOD removal at the end of the pilot plant operation. In future operations, much more time should be allocated to stabilizing the units.

- Foaming - Foaming was a consistent problem throughout the pilot plant operations. Aside from the pH problems in the ammonia stills, it is believed to be due to various foaming compounds in the wastewater such as naphthalene. Foaming was present in the biological oxidation aeration tank, the ammonia stills, the final clarifier, and the holding tanks. Future operations should include provision for a continuous fine spray to be applied over the tanks to suppress the foam (which worked in the pilot plant operations), or research should be done to investigate possible removal of foam-causing agents in the wastewater.

- Bio-unit solids carryover - Large quantities of suspended solids were present in the effluent from the bio-unit. It was determined by passing the wastewster through a Millipore filter that the solids were of a colloidal nature, which would not settle and could not be removed by normal filtration. These solids severely interferred with proper operation of the resin and activated carbon adsorbents because they clogged the media. This, in turn, impaired proper operation of the tertiary treatment units. By using jar tests, it was determined that these colloidal solids could be removed via polyelectolytes in combination with chemical addition (such as lime, ferrous sulfate, or alum). Further research on this is needed.

Sludge produced from the bioreactors may contain polycyclic aromatic hydrocarbons and heterocyclic compounds (49). The sludge should be disposed of, and two possible methods are incineration and wet oxidation. Due to the high moisture content of the sludge, incineration may be very expensive. Wet oxidation is investigated further in Reference No. 49.

5.7 TREATABILITY STUDY CONCLUSIONS

The pretreatment units in the pilot plant worked quite successfully in removing certain precursors to the biological treatment units. Recovery of ammonia from the ammonia strippers, and phenol from the dephenolizers, are a secondary benefit from these systems. Also, the spent roughing fiter media, in this case coal and tar and pitch, can be reused in the gasifier.

The biological oxidation unit needed more time for stabilization, yet problems that arose from its operation have revealed specific research needs and/or operational corrections that can lead to highly successful future technologies.

5.8 OTHER STUDIES

In addition to studies listed in EPA's original literature search on coal gasification (29), and studies listed in the bibliography of this report, this section lists more recent reports or ongoing studies since the completion of the treatability study in 1981. There are many studies on the treatability of gasification wastewaters but few specifically limited to those of low-Btu gasifiers. Most of the work performed on low-Btu gasification wastewaters in recent years has been funded by the Department of Energy and performed by various universities or DOE's Energy Technology Centers. In particular, much work has been performed at DOE's Grand Forks Energy Technology Center, which operates a small slagging fixed-bed, low-Btu gasifier for research purposes. Information on the treatability of wastewaters from this study is reported in Reference No. 22 and briefly summarized below.

5.8.1 SLAGGING FIXED-BED GASIFIERS

Two combinations of treatments were examined. The system used in Phase I is shown in Figure 5-9 and that in Phase II in Figure 5-10. The steps involved are compared below:

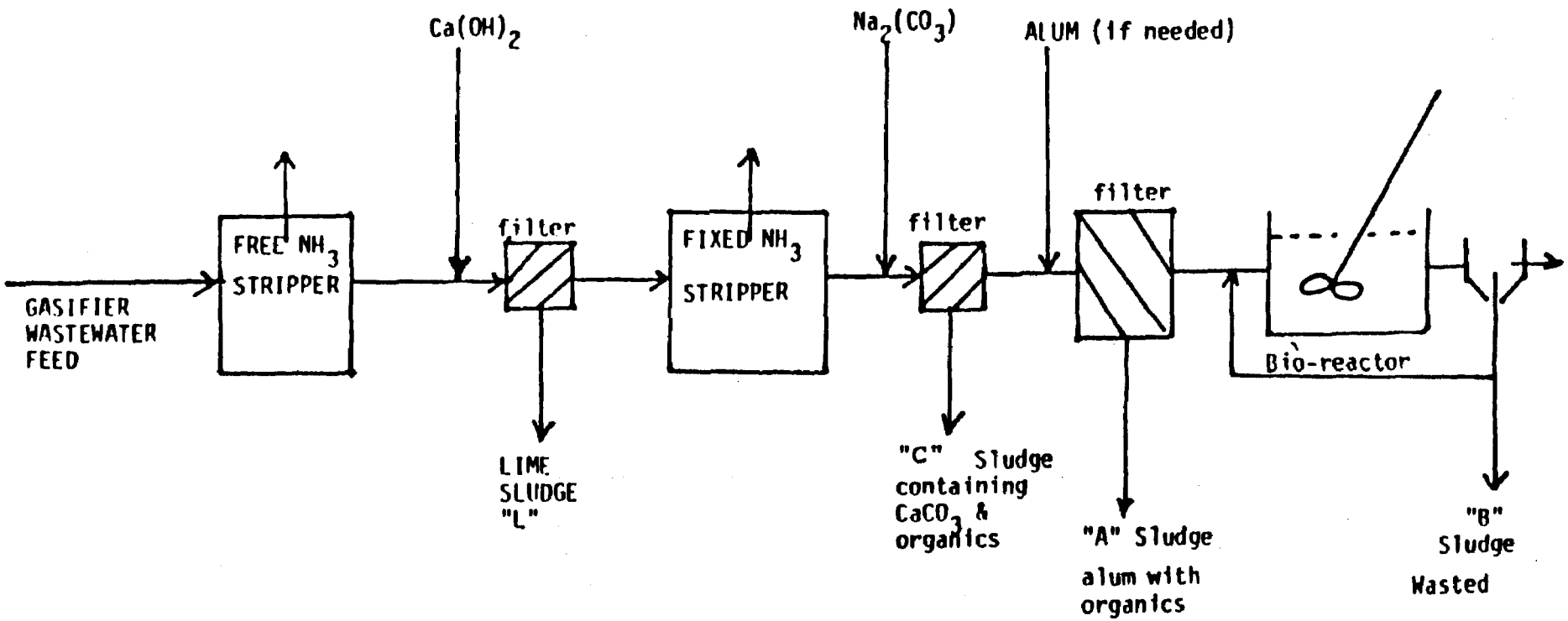

Figure 5-9. Block Diagram of GFETC Wastewater Sludge Generation System (Phase 1)

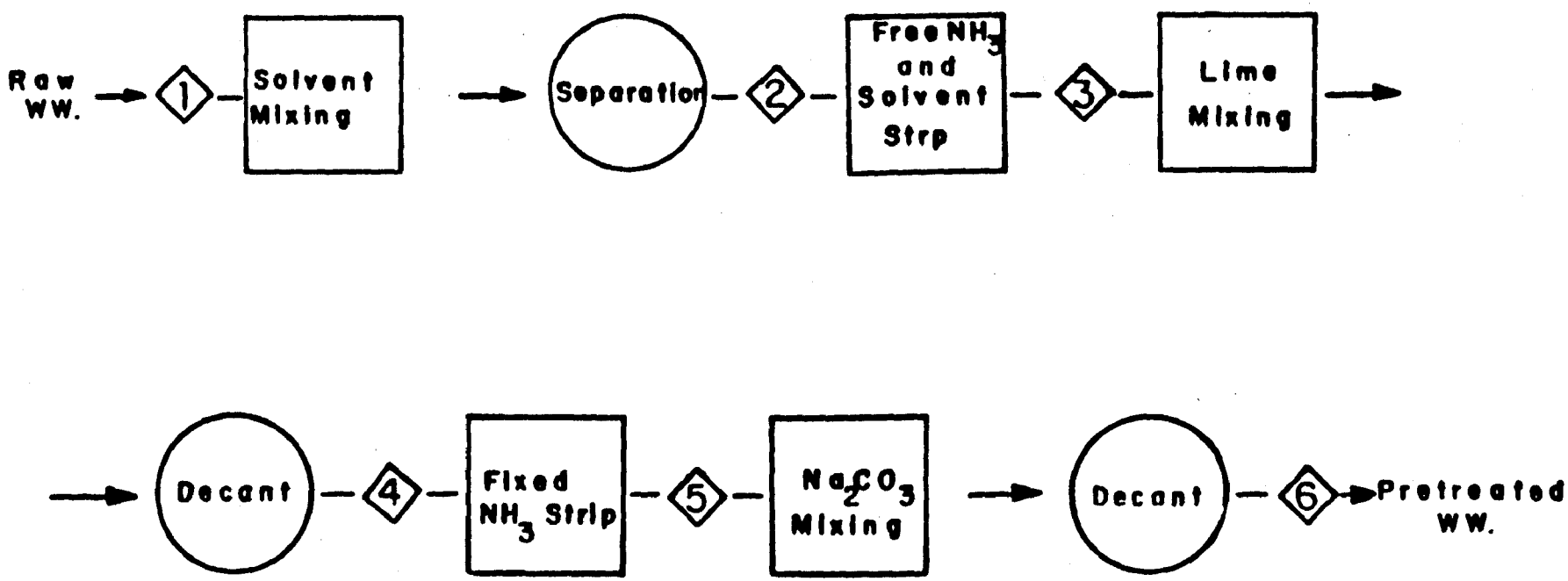

Figure 5-10. GFETC Gasifier Wastewater Pretreatment Train (Phase 2)

Phase I	Phase II
Free Ammonia Stripping	Solvent Extraction
Lime Addition	Free Ammonia Stripping
Sludge Removal	Lime Addition
Fixed Ammonia Stripping	Sludge Removal
Sodium Carbonate Addition	Fixed Ammonia Stripping
Sludge Removal	Sodium Carbonate Addition
Alum Addition	Sludge Removal
Filtration	Biological Treatment
Biological Treatment	

The biological treatment unit removed 98 percent of the BOD and 80 percent of the TOC. Such removals reflect the careful control conditions of the study and not commercial operation. Ammonia removal was about 83 percent in the combined sripping operations. The ammonia stripping was done with air at 170°F rather than steam in a countercurrent stripping column.

The effect of solvent extraction with methylisobutylketone (MIBK) at a ratio of one volume MIBK to 25 volumes of waste as used in Phase II. In the extraction step, 53 percent of the phenol was removed. Combined free and fixed ammonia stripping removed 91 percent of the ammonia. Biological oxidation of Phase II wastewater was similar to that in Phase I.

The advantage of using lime instead of sodium hydroxide to raise the pH for ammonia stripping is that dissolved inorganic salts are not increased significantly. In addition to avoiding the discharge of the dissolved sodium, it is believed that the lower inorganic solids content improved the settleability of the sludge in the biological operation.

Other more recent studies (as of May, 1986) pertaining to wastewater treatment from this gasifier are listed below along with their abstracts.

- Hendrikson, J. G., and G. G. Mayer, "Gasification Wastewater Treatment and Reuses," August, 1984, Low Rank Coal Research Quarterly Technical Progress Report, April-June, 1984.

  ABSTRACT: Results from the Phase II test showed that aqueous gasifier effluent treated by solvent extraction, steam stripping, AS processing, GAC adsorption, and multimedia filtration was not suitable as feed to a cooling tower operated at 10 cycles of concentration. This water was high corrosive to carbon steel, with corrosion rates of 19 to 65 mpy measured during this test. This water caused severe fouling of carbon steel,

resulting in large pressure drop increases and decreases in heat transfer coefficients for carbon steel heat exchanger tubes. These results indicate that for this water to be used successfully as makeup to a cooling tower, the addition of chemicals for the control of corrosion and the associated fouling will be necessary, or substitution of stainless steel or some other corrosion resistant material for all carbon steel will be required. This water did not appear to support any substantial level of biological activity. Exhaust air from the tower was free from organics, but a substantial amount of ammonia was stripped from in the tower (65 percent of the influent quantities). Adsorption geotherm studies have been completed for the biologically treated and dual-media filtered SGL to determine the feasibility of using GAC to adsorb nonbiodegradable substances, such as hydantoins. A batch kinetic experiment was performed to determine the equilibrium time. Fourteen figures and 18 tables.

- Paulson, L. E., et al., "Utilization of Powdered Activated Carbon in Activated Sludge Process in Treating Coal Gasification Wastewater," AIChE Summer Nat. Mtg., Detroit, MI, Paper No. 386, August 16-19, 1981.

  ABSTRACT: A laboratory study was conducted to examine the biological treatability of wastewaters produced from the slagging fixed-bed gasification of North Dakota lignite using powdered activated carbon (PAC) activated sludge process. Four bench-scale continuous completely mixed activated sludge reactors were monitored for contaminant removal efficiencies and kinetic coefficient determinaation. At a hydraulic detention time of one day, effluent COD concentration decreased with the increasing level of PAC in the reactors up to 34 percent decrease at 6 g/l PAC concentration.

- Turner, C., and T. Towers, "Installation, Operation, and Analysis of Gasification Wastewater Treatment PDU's," University of North Dakota, project currently in progress.

  ABSTRACT: The objective of this research is to model the wastewater treatment scheme planned for the GPGA gasification plant being constructed in western North Dakota. To model GPGA's wastewater treatment process, the following approach was planned: (1) a pilot-plant scale (1 GPM) wastewater treatment train borrowed from the EPA and installed at the Grand Forks Energy Technology Center, as well as a cooling tower leased by DOE from Resources Conservation Co. and also installed at Grand Forks Energy Technology Center; (2) wastewater produced in the Grand Forks Energy Technology Center fixed-bed slagging gasifier

processed through the treatment train, solvent extracted and ammonia stripped; (3) pretreated wastewater was to be used as the cooling water in a test cooling tower loop. Wastewater was successfully treated as a result to achieve phenol (150 mg/l) and ammonia (500-600 mg/l) concentrations similar to those expected in GPGA's cooling tower make-up water.

5.8.2 OTHER LOW-BTU GASIFICATION PROCESS WASTEWATERS

Two studies have recently been completed concerning the Westinghouse gasification process (low-Btu, ash agglomerating fluidized-bed coal gasification). These are listed below:

- Winton, S. L., et al., "Process Wastewater Treatability Study for Westinghouse Fluidized-Bed Coal Gasification," July, 1985 (available through NTIS--PC A02/MF A01).

  ABSTRACT: The paper discusses a joint program (U.S. DOE, The Gas Research Institute, and U.S. EPA) to develop performance data, design parameters, conceptual designs, and cost estimates for treating wastewaters from a fluidized-bed coal gasification plant. Preliminary results indicate that wastewater can be effectively treated by current technology. At this time the unit operations being evaluated are performing according to expectations. Results from bench-scale studies represent a first step in the development of a basis of design for treating these wastewaters. These data will also be used to develop conceptual designs from which cost estimates for wastewater treatment for a commercial-scale fluidized-bed coal gasification facility will be prepared.

- Winton, S. C., et al., "Treatment of Aqueous Waste Streams from KRW Energy Systems Coal Gasification Technology," International Gas Research Conference, Washington, D.C., Sept. 10, 1984.

  ABSTRACT: Ash agglomerating fluidized-bed coal gasification technology has developed to the point where commercial-scale systems are being planned. The KRW Energy Systems (KRW) coal gasification process (formerly called the Westinghouse gasification process) is representative of this technology and has been the subject of extensive environmental, health, and safety evaluations. The Department of Energy (Morgantown Energy Technology Center), The Gas Research Institute, and the Environmental Protection Agency (Industrial Environmental Research Laboratory, Research Triangle Park, North Carolina) have sponsored a bench-scale evaluation to

determine the extent to which process wastewaters from the KRW gasification process are treatable using commercially proven wastewater treatment technology. The program was conducted in cooperation with KRW which provided wastewater samples, process information, and technical review. The treatment processes considered in this evaluation were suspended solids removal, steam stripping, cyanide conversion, and biological oxidation.

Further research is currently being performed on the Morgantown Energy Technology's gasifier wastewaters. (This gasifier is one of the four sampled in EPA's study.) The study is listed below:

- French, W. E., "Anaerobic Wastewater Treatment," U.S. DOE, Morgantown Energy Technology Center, Morgantown, WV, study currently in progress.

  ABSTRACT: The project objective is to evaluate the performance of the completely mixed, expanded-bed, granular activated carbon anaerobic filter in treating coal gasification wastewater. Activities are (1) to study treatability of low-Btu, elevated pressure, fluid-bed Wellman-Galusha gasifier wastewater with the completely mixed, expanded-bed, granular activated carbon (GAC) anaerobic filter; (2) to determine the interactions between the feed wastewater strength, process loading, GAC replacement sched- ule, and process performance; (3) to identify major contributors to microbial inhibition through the use of a chemically synthe- sized coal gasification wastewater; and (4) to evaluate the loading potential of the GAC anaerobic filter during the treatment of a simulated wastewater monohydric phenols.

Three other studies that apply to wastewater treatment for gasifiers in general (not necessarily to low-Btu gasifiers) are listed below also:

- Castaldi, F. J., and S. L. Winton, "Treatment-System Design for Process Wastewaters from Non-Tar-Producing Coal Gasification Technology," June 1985 (available through NTIS, PCA10/MF A01).

  ABSTRACT: The report documents a study of the treatment of wastewaters from non-tar-producing coal-gasification processes and indicates that the aqueous wastes are treatable with conventional technology. Wastewater-management scenarios for treated-effluent discharge and wastewater reuse as cooling tower makeup were examined. A technology evaluation incorporating wastewater characterization and treatability data for the treatment of wastewaters from non-tar-producing coal gasifiers established a

single wastewater treatment system to meet both the discharge and reuse water-management scenarios. The example treatment system includes steam stripping, equalization, cyanide/thiocyanate conversion for treatment of stripper overheat condensates, biooxidation, and final effluent filtration. This study was performed to expand the existing wastewater data base to include characterization, treatability, and basis-of-design information. The results of laboratory and desk-top evaluations of alternative wastewater-treatment technologies produced conceptual designs for wastewater-treating facilities to meet discharge and water-reuse needs at non-tar-producing coal-gasification plants.

- Donaldson, T. L., et al., "Fixed-film, Fluidized-bed Bioreactors for Biooxidation of Coal Gasification Wastewaters," 1984, Am. Inst. Chem. Eng., Spring National Meeting, Anaheim, CA, 20 May 1984.

  ABSTRACT: Fixed-film, fluidized-bed bioreactors have been used successfullly to treat dilute synthetic wastewaters on a continuous basis for more than 1 year and dilute actual coal conversion wastewaters for 9 months. The bioreactors have exhibited stable biological activity, and no difficult operating problems have been encountered. Effluent phenol concentrations of less than or equal to 1 mg/l have been obtained using synthetic wastewater containing 30 to 40 mg/l of phenol. Volumetric reaction rates in the bioreactors are substantially higher than those in suspended growth systems because of the high concentration of retained cells on the support particles. Bioreactor performance, batch kinetic studies, and development, characterizaton, and preservation of the microbial culture are described.

- King, C. J., "Condensate Wastewater Treatment," Lawrence Berkeley Laboratory, University of California, study currently in progress.

  ABSTRACT: Large volumes of condensate water are formed when reactor effleunts from coal gasification are cooled. The project objective is to provide basic understanding so as to develop improved physiochemical processing methods for these condensate waters. Particular attention has been given to solvent-extraction and stripping processes and the determination of the chemical make-up of real water samples. Research is focused on (1) determination of individaul components contributing to the measured chemical oxygen demand (COD) and total organic carbon (TOC); (2) extraction with both conventional and novel chemically associating solvents, which enables effective

removal of COD and TOC with low energy consumption; (3) fractionation and removal of solutes by evaporation and sorption processes; (4) combining extraction of ammonia with stripping of acid gases in an innovative process that can recover ammonia as an isolated product, and (5) hydantoin-formation chemistry.

SECTION 6

CONCLUSIONS

As shown by Section 4, the raw wastewaters from low-Btu gasifiers contain a vast array of pollutants ranging from priority pollutants, Appendix C pollutants, nonconventional pollutants and metals, to conventional pollutants. Ammonia, a nonconventional pollutant, is present in significant quantities as are phenols. The raw wastewater contains materials that inhibit biological treatment.

Pretreatment of the raw wastewater is necessary to remove tars and oils, pheonols, and ammonia primarily to make the wastewater suitable for biological treatment. Phenol removal by solvent extraction, when combined with ammonia stripping, removes a major portion of the organic compounds and has been demonstrated to produce a wastewater that can be biologically treated. However, it is most likely that bilogical treatment of gasifier quench waters will require dilution. Further research, primarily on biological oxidation stabilization and the solids formation and/or removal after biological oxidation, is necessary.

Many additional methods of treatment used in similar industries, such as coking and medium-Btu or high-Btu gasification, would appear to be usable as the raw wastewater is of similar quality. In practice, numerous combinations of treatments can be expected.

BIBLIOGRAPHY

1. ANR Technology Company, Performance of a Quench/ESP Tar Scrubber on Producer Gas, D.O.E. Project Report, January 1983.

2. Buividas, L. J., "Coal to Ammonia: Its Status", Chemical Engineering Progress, v.77, N.5, May 1981, pp 44-53.

3. Collins, Robert V., Kenneth W. Lee and D. Scott Lewis, Comparison of Coal Conversion Wastewaters, Radian Corp, no date.

4. Electric Power Research Institute, Coal Gasification Systems A Guide to Status, Applications and Economics, Palo Alto, California, June 1983. (AP-3109).

5. Felder, R. M., et.al., "How clean Gas is Made from Coal," Environmental Science and Technology, v. 14, n. 6, June 1980, pp 658-666.

7. Foster, David H., Richard D. Noble and O. T. Abudu, "PACT Treatment of Synfuel Retort Waters. I. Influence of Process Water Components on Oxygen Uptake Rates", in Industrial Waste, Proceedings of the Thirteenth Mid-Atlantic Conference, Newark, Delaware, June 29-30, 1981, Ann Arbor Science Publishers, 1981, pp. 217-227.

8. Ghassemi, M., et.al., Applicability of Petroleum Refinery Control Technologies to Coal Conversion, Washington, D.C., U.S. Environmental Protection Agency, October 1978, (EPA-600/7-78-190).

9. Green, C. R., "Synfuels: What's Economical?", Hydrocarbon Processing, v. 61, N. 6, June 1982, pp. 77-82.

10. Hicks, R. E., et.al., Wastewater Treatment in Coal Conversion, Washington, DC, U.S. Environmental Protection Agency, June 1979 (EPA-600/7-79-133).

11. Hung, Yung - Tse, et.al., "Assessment of Activated Sludge Process in Treating Solvent - Extracted Coal Gasification Wastewaters", in Industrial Waste, Proceedings of the Thirteenth Mid-Atlantic Conference, Newark, Delaware, June 29-30, 1981, Ann Arbor Science Publishers, 1981, pp. 228-238.

12. Hydrotechnic Corporation, Technical Memorandum: Synfuels Industry, Analogous Industries Wastewater Treatment, New York, January 21, 1981.

13. Iglar, Albert F., Final Report: Study of the Treatability of Wastewater from a Coal Gasification Plant, Pittsburgh Energy Technology Center, U.S. Department of Energy, 1980. (DOE/ET/00234/31).

14. Jones, Fred L., "Low BTU Coal Gasification: Bringing Back an Old Workhorse," presented at Joint Power Generation Conference, ASME-IEEE, Denver, Colorado, October 17-21, 1982.

15. Jones, Fred L., "Low BTU Coal Gasification, Yesterday's Industrial Fuel for Tomorrow," Presented at 1983 Energy-Sources Technology Conference, Houston, TX, January 30 - February 3, 1983.

16. Jones, Fred L., "Low BTU Gas - A Fuel for Industry," presented at 10th Energy Technology Conference, Washington, DC, February 28 - March 2, 1983.

17. Jones, Fred L., "Performance of a Baffle Plate Burner on Low BTU Gas from Coal," presented at International Conference on Combustion of Tomorrow's Fuels, Santa Barbara, California, November 7-12, 1982.

18. Luthy, Richard G. and James T. Fallon, "Biological Treatment of a Coal Gasification Process Wastewater," Water Research, v. 14, 1980, pp. 1269-1282.

19. Luthy, Richard G., et.al., "Cyanide and Thiocyanate in Coal Gasification Wastewaters," Water Pollution Control Federation Journal, v. 51, n. 9, September 1979, pp. 2267-2281.

20. Luthy, Richard G., "Treatment of Coal Coking and Coal Gasification Wastewaters," Water Pollution Control Federaation Journal, v. 53, n. 3, March 1981, pp. 325-339.

21. Neufeld, Ronald D., L. Mattson and P. Lubon, Bio-oxidation of Thiocyanates Typical of Coal Conversion Effluents, Pittsburgh, PA, Univ. of Pittsburgh, Jan. 8, 1981 (DOE/ET/04502-7).

22. Neufeld, Ronald D., et.al., GFETC Lignite Coal Gasification Wastewater Treatment Techniques and Sludges: Chemical and Health Effects, Grand Forks Energy Technology Center, U.S. Department of Energy, April 15, 1982 (DOE/ET/10299-2).

23. Neufeld, Ronald D., et.al., Influence of Solvent Extraction on Fixed Bed Gas Producer Wastewater, Morgantown Energy Technology Center, U.S. Department of Energy, April 15, 1982, (DOE/ET/16528-2).

24. Neufeld, Ronald D., et.al., Pretreatment and Biological Digestion of METC Stirred Fixed Bed Gas Producer Wastewaters, Morgantown Energy Technology Center, U.S. Department of Energy, Sept. 30, 1981, (DOE/ET/14372-7).

25. Neufeld, Ronald D., The Treatment of Wastes from Synthetic Fuels, Pittsburgh, PA, Univ. of Pittsburgh, Jan. 15, 1982, (SETEC-CE-81-027).

26. Patterson, R. D. and S. L. Darling, "A Low BTU Coal Gasification Scheme," Chemical Engineering Progress, v. 76, n. 3, March 1980, pp. 55-60.

27. Radian Corporation, Background Docuemnt for Environmental Performance Goals: High BTU Gasification, Washington, DC, U.S. Environmental Protection Agency, March 12, 1980.

28. Radian Corporation and Burns and Roe Industrial Services Corporation, Industry Profile: Synfuels Industrial Category (Draft), Washington, DC, U.S. Environmental Protection Agency, Dec. 1980.

29. Radian Corporation, Literature Review Report: Synfuels and Related Industries, Washington, DC, U.S. Environmental Protection Agency, Sept. 1980.

30. Ruggiero, Dominick D. and Harold J. Kohlman, Low-BTU Gasifier Wastewater Treatability: Phase III, Pilot Plant Study at Holston Army Ammunition Plant, U.S. Environmental Protection Agency, Dec. 1983.

31. Synfuels Handbook, by the Editors of Coal Week, New York, McGraw-Hill, 1980.

32. U.S. Department of Energy, Environmental Control Technology Division, Processing Needs and Methodology for Wastewaters from the Conversion of Coal, Oil Shale and Biomass to Synfuels, Washington, DC, May 1980, (DOE/EV-0081).

33. U.S. Environmental Protection Agency, Estimated Theoretical Treatability of Organic Priority Pollutants: The Relationship with Solubility Parameters (Part E), Draft, Washington, DC, May 1979 (EPA 440/1-79/100).

34. U.S. Environmental Protection Agency, Pollution Control Technical Manual: Lurgi-Based Indirect Coal Liquefaction and SNG, Washington, DC, April 1983 (EPA-600/8-83-006).

35. U.S. Environmental Protection Agency, Pollution Control Technical Manual: Lurgi Oil Shale Retroting With Open Pit Mining, Washington, DC, April 1983 (EPA-600/8-83-005).

36. U.S. Environmental Protection Agency, Pollution Control Technical Manual: Modified In-Situ Oil Shale Retorting Combined with Lurgi Surface Retorting, Washington, DC, April 1983 (EPA-600/8-83-004).

37. U.S. Environmental Protection Agency, Pollution Control Technical Manual: TOSCO II Oil Shale Retorting With Underground Mining, Washington, DC, Spril 1983 (EPA-600/8-83-003).

38. Willson, Warrack G., et.al., "Pilot Plant Wastewater Treatment Project Status at the Univ. of N. Dakota Energy Research Ctr," presented at 12th Biennial Lignite Symposium, May 18-19, 1983, Univ. of N. Dakota, Grand Forks, No. Dakota.

39. Winton, S. L. and M. D. Matson, Lurgi Process Wastewaters Projected Characteristics and Treatment Alternatives, Radian Corporation, Austin, TX, Technical Note 218-001-15-02, June 13, 1980.

40. UOP/SDC,. Technical Analysis of Advanced Wastewater Systems for Coal Gasification Plants, Preliminary Print (D-TR-80/041-001).

41. Benson, J. M., et.al., "Toxicological and Chemical Characterization of Process and Waste Streams of a Low Btu Gasifier," Annual Report, Inhalation Toxicology Research Institute, October 1, 1981 - September 30, 1982, pp. 125-128.

42. Booz, Allen and Hamilton, Inc., Markets for Low- and Medium-Btu Coal Gasification: An Analysis of 13 Site Specific Studies, September 1981, (DOE/RA/02625-T1).

43. Newton, G. J., et.al., Editors, "Physicochemical Characteristics of Process Streams of an Experimental Low Btu Gasifier," Annual Report, Inhalation Toxicology Research Institute, October 1, 1979 - September 30, 1980, pp. 375-383.

44. Royer, R. E., et.al., Editors, "Chemical and Toxicological Characterization of Waste Stream Effluents of an Experimental Low-Btu Gasifier,"Annual Report, Inhalation Toxicology Research Institute, October 1, 1979 - September 30, 1980, pp. 429-431.

45. Singh, S.P.N., J. F. Fisher and G. R. Peterson, Evaluation of Eight Environmental Control Systems for Low-Btu Coal Gasification Plants, Washington, D.C., U.S. Department of Energy, March 1980, (ORNL-5481).

46. Witmer, F. E. and C. D. Livengood, Pollution Control Costs: A Status Report, Washington, D.C., U.S. Department of Energy, May 1982, (CONF-8205161-1).

47. Radian Corporation, Low-Btu Gasification Generic Sampling Program for Multimedia Development of Regulatory Support Data, Washington, DC, U.S. Environmental Protection Agency, 11 June 1981.

48. Hydrotechnic Corporation, Phase II - Bench Scale Treatment Program for Holston Army Ammunition Plant; Low-Btu Gasifier Wastewater, Washington, D.C., U.S. Environmental Protection Agency, August 1981.

49. Harris, M. T., et.al., Wet Oxidation of Phenol and Naphthalene (As a Surrogate PAH) in Aqueous and Sludge Solution: Application to Coal Conversion Wastewater and Sludge Treatment, Oak Ridge National Laboratory, Oak Ridge, TN, May 1983.

APPENDIX A

DESCRIPTIONS OF PLANTS SAMPLED AND SUMMARIES OF SAMPLING DATA

TABLE OF CONTENTS

INTRODUCTION A-1

FORT SNELLING LOW-BTU GASIFICATION FACILITY A-2

MORGANTOWN ENERGY TECHNOLOGY CENTER A-48

GENERAL ELECTRIC CORPORATE RESEARCH AND DEVELOPMENT CENTER A-61

HOLSTON ARMY AMMUNITION PLANT A-75

INTRODUCTION

This Appendix describes the four low-Btu gasification facilities that were sampled.* The following lists the items included in the descriptions:

A) Selection Rationale - Reasons for selection of the facility for sampling

B) Process Description - A description of the gasification process unique to each facility

C) Sample Episodes - A description of sample points and sampling procedures

D) Operating Parameters - A detailed description of operating conditions at the time of sampling

E) Pollutant Data - A listing of analytical data obtained from the sampling at each sample point

---

*As discussed in this appendix, samples were taken both for the Office of Solid Waste and for the Office of Water (particularly the Effluent Guidelines Division or EGD). For the reader's information, EGD is currently entitled the Industrial Technology Division but references to EGD are left, as is, in the text.

Also note that while sample points for both the Office of Solid Waste and for the Office of Water are described, only analytical data for samples taken for the Office of Water are presented in this report.

FORT SNELLING LOW-BTU GASIFICATION FACILITY

SELECTION RATIONALE

The Fort Snelling low-Btu gasification facility was selected for sampling for the following reasons:

- The gasifier is a commercial sized unit.
- It provides the ability to evaluate the effects of various feed coals and coal sizes.
- Both gas quench and ash quench wastewaters can be sampled.

PROCESS DESCRIPTION

The gasification facility includes a single-stage, 6.5-foot, fixed-bed atmospheric gasifier with a water cooled agitator. The U.S. Bureau of Mines attempts to operate the gasifier at maximum capacity.

Coal fed to the gasifier is first transported by conveyor belt to a vibrating screen where coal fines less than 3/4 inch are removed for disposal. From the screen, the coal is transported to the top of the gasifier facility via a bucket elevator to a 10-ton storage bin. The storage bin is supported on precision load cells to determine the coal feed rate. Coal from the storage bin gravity flows through two pipes to a 3-ton feed bin. Two sliding disc valves, one valve per pipe, control the flow of coal to the feed bin. The valves are opened only when the feed bin is low in coal. The feed bin is divided into two chambers each of which simultaneously gravity feeds the gasifier via two 10-inch feed pipes. Each feed pipe has two sliding rotary valves, one located just below the feed bin and one located just above the gasifier. The valves are opened alternately allowing for a continuous feed of coal and to reduce the quantity of emissions escaping through the feeding system. The valves below the feed bin are opened to fill the feed pipes only when the pipes are empty of coal and the valves above the gasifier are closed.

The ash produced by the gasification process falls through the grate openings into an ash bin where it is sluiced by water into a truck for landfilling.

The low-Btu gas produced by the gasifier is passed through a refractory-lined, dry cyclone to remove most of the particulate carryover which consists of approximatley 90 percent carbon. These carbon particles are sluiced with water out of the cyclone

and trucked for storage. After passing through the cyclone, the low-Btu gas is transmitted by a 24-inch I.D. duct to a combustion chamber and an 8-inch I.D. duct to the pelletizing kiln. The 8-inch duct exists off the 24-inch duct that leaves the cyclone. Both ducts are lines with 4 inches of refractory.

The combustion chamber is designed to utilize the full capacity of the gasifier because at maximum output the pelletizing kiln would use only 3.5 to 4 million Btu or 10 to 15 percent of the product gas. Exhaust gas from the combustion chamber is cleaned with an impingement tray-type scrubber before entering the combustion stack. The exhaust gas from the kiln is also passed through a venturi scrubber before entering the stack. An incinerator is installed on the gasifier vent stack to ignite gases during startup and banking.

There are venturi orifices located in the pipelines to the combustion chamber and the kiln to determine gas flow rates. The feed bin and ash bin are on load cells to determine the amount of coal fed and ash removed respectively.

A flow diagram of the U. S. Bureau of Mines coal gasification facility is illustrated in Figure A-1. Table A-1 lists all of the sample points for both OSW and EGD sampling.

SAMPLE EPISODES

The Fort Snelling facility was sampled on three separate occasions:

- June 17-June 24, 1981 - North Dakota Lignite;
- July 22-July 31, 1981 - Texas Lignite; and
- August 12-August 21, 1981 - Colorado Subbituminous.

The three visits allowed for sampling of the gasifier during utilization of three separate feedstocks. Each feedstock was also fed using at least two different sizes. Wastewater characteristics were impacted by the different coal types but did not exhibit appreciable differences due to changes in feed size. As discussed in more detail later in the section on wastewater characteristics, the primary differences in the wastewaters were related to the foreign matter in the coals, i.e. TSS and metals content. The organic material in the wastewaters from the three episodes did not show significant differences related to feed material.

SAMPLE EPISODE NO. 1--NORTH DAKOTA LIGNITE

The test burn of North Dakota "Indianhead" Lignite ran as scheduled from June 16 through June 25, 1981. Table A-2 lists

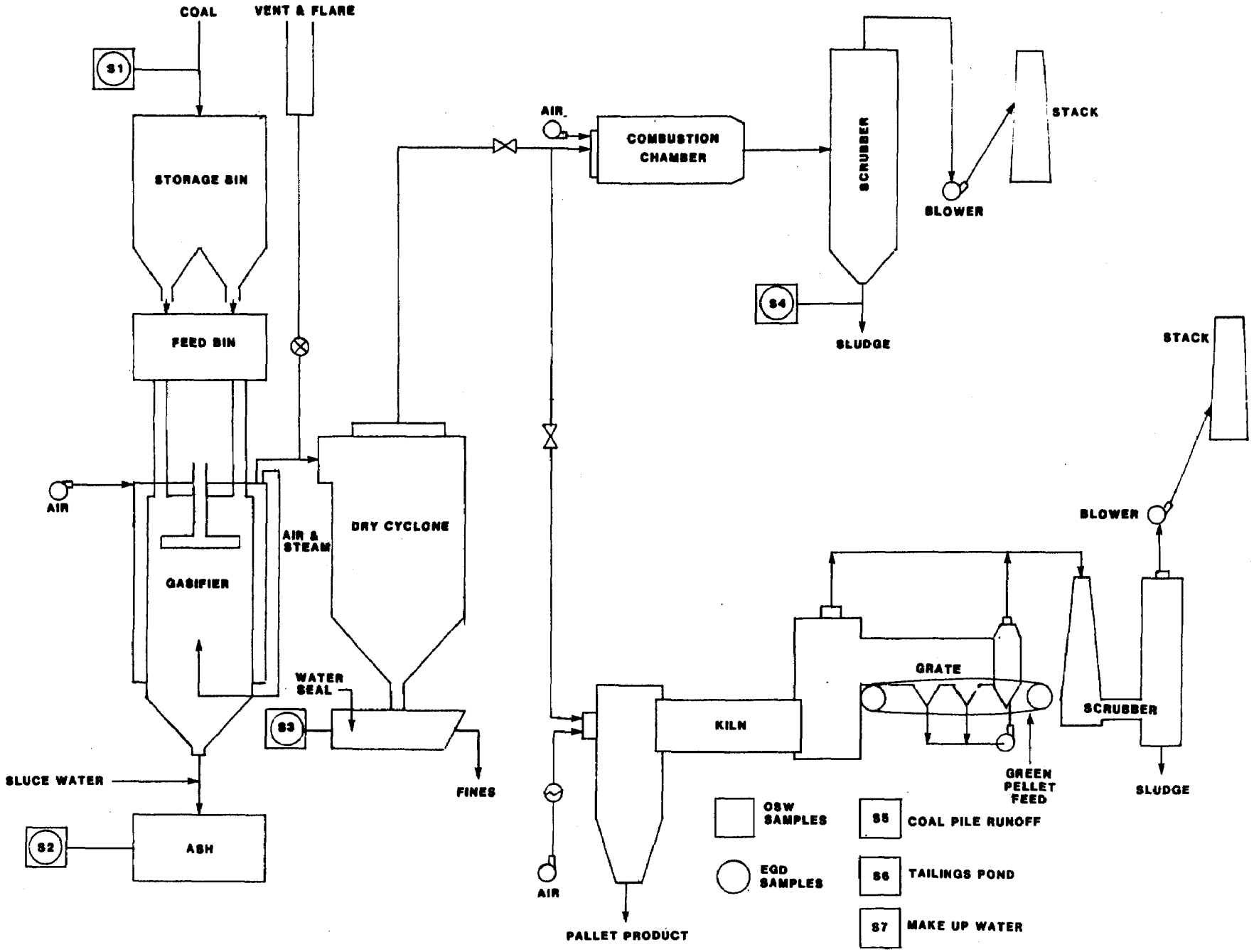

Figure A-1. Process Flow Diagram of U.S. Bureau of Mines Gasification Facility and Pelletizing Plant

Table A-1

Sample Points at the Fort Snelling Gasification Facility

Source	Sample Point
Coal Feed	S1
Gasifier Sluice Water	S2
Gasifier Ash	S2
Cyclone Quench Water	S3
Cyclone Dust	S3
Gas Scrubber Water	S4
Scrubber Float Tar	S4
Scrubber Sink Tar	S4
Coal Pile Runoff	S5
Tailings Pond	S6
Make-Up Water	S7

TABLE A-2
SUMMARY OF KNOWN OPERATIONAL EVENTS DURING SAMPLING

Date	Time	Description
6/16	1300	Startup with charcoal and kerosene, gasifier burning coke and produced gas vented
	0400-2400*	Gas to combustor.
6/17	0000-0800*	Feed switched to 2 x 3/4 inch lignite
	1415	EGD/OSW coal feed sample taken
	1530-1545*	Gasifier sluice water and ash samples taken.
6/18	0800	Rate=1.1 ton/h of 2 x 3/4 inch lignite
	0830	Scrubber water samples taken
	0930	Cyclone quench water sample taken
	1000	Cyclone dust sample taken
	1300*	Rate=2.0 ton/h of 2 x 3/4 inch lignite.
6/19	0700	Rate=2.0 ton/h of 2 x 3/4 inch lignite
	0714-0750	Samples of gasifier sluice water and ash, and cyclone quench water
	1200*	Feed switched to 2 x 1/2 inch lignite
	1330	Scrubber water, scrubber float and sink tars samples taken
	1930	Gasifier sluice water and ash samples taken
	2300	Samples taken of cyclone quench water and dust, and scrubber water, float and sink tars.
6/20	0000-0500*	Feed switched to 2 x 1/4 inch lignite
	1845	Scrubber water, tars samples taken
	1900-1915	Gasifier sluice water and ash samples taken
	1920	Cyclone quench water sample taken.
6/21	10263	Coal pile runoff sample was taken. 0.35 inches of rain fell.
6/22	0500*	Feed switched to 3/4 x 1/4 inch lignite. Rate=1.3 ton/h
	0930	Rate dropped to 1 ton/h - unstable bed
	0945-1000	Cyclone quench water and dust samples taken
	1100	Gasifier sluice water and ash samples taken
	1400	Scrubber fan went down, scrubber shut off
	1545	5 tons of lignite (3/4 x 1/4 inch) will be burned then coke added to stabilize the bed.
6/23		Feed switched to 2 x 3/4 inch lignite
	0300	Agitator down. No coal was loaded until 0700 2 x 3/4 inch feed from 2 year old stockpile of North Dakota lignite.
6/24	0730-0740	Samples of cyclone quench water and dust taken
	0800	Intake water sample taken
	0830-0845	Gasifier sluice water and ash samples taken.

*Approximate times

information on gasifier operations. This information was obtained through informal discussions with gasifier operators and on observations of the field crew. Tables A-3 and A-4 list the samples taken during the North Dakota Lignite test burn for wastewater samples and solid waste samples respectively.

The ash from the gasifier was removed after approximately 500 pounds had accumulated in the hopper. Water was added for 30 seconds, and the slurry was dropped into a portable bin. The ash settled out immediately. The ash consistency ranged from fine particles through large chunks of unburned lignite.

Samples of the sluice water were taken immediately after the slurry was dropped into the bin. If the water depth permitted, all fraction bottles were filled directly except the VOAs, which were filled via a stainless steel beaker. If the water depth was not sufficient, a stainless steel beaker was used to fill the fraction bottles.

The ash samples were taken after the sluice water was decanted off. Samples were grabbed with a stainless steel beaker and deposited into a clean one gallon jug.

The product gas passed through the cyclone dust collector after exiting the gasifier. Particulate material was removed and collected in a water bath below the cyclone. The level of the quench water controlled by a float was maintained above the dust discharge oriface. The water overflowed through a screen and was discharged. The dust settled to the bottom of the bin and was manually scraped out whenever the operators felt it was necessary. The dust scraped out of the bin fell through a chute to a 55-gallon drum on the floor below.

Samples of the quench water were taken directly from the bin. A stainless steel beaker was used to fill the VOA vials. The quench water samples were taken near the time of the gasifier sluice water/ash sampling.

The cyclone dust samples were taken from the 55-gallon drum in which the dust collected after it was scraped out of the bin. Very little dust accumulated in the bin during the first days of the burn. The dust accumulation increased as the lignite feed size decreased. Dust particles taken for the last grab sample (6/24) had the consistency of moist concrete whereas the dust on the first grab (6/18) sample contained larger and drier solids.

The blowdown of the scrub water and sink tar was scheduled on an hourly basis while the float tar was scheduled four times per day. The blow down aliquots were wasted to 55-gallon drums except for the 0700 and 1900 aliquots which were saved for analyses.

TABLE A-3

SUMMARY OF EGD - WASTEWATER SAMPLES

Date - Time (Hr.)	SCC Code	Points
6/17 - 1415	SO482	Coal Feed
- 1530	10240/86569*	Sluice Water
6/18 - 0930	10241/86570	Quench Water
- 0830	10242/86571	Scrubber Water
6/19 - 0715	10243/86572	Sluice Water
- 0750	10244/86573	Quench Water
- 1330	10245/86574	Scrubber Water
- 1930	10246/86575	Sluice Water
- 2330	10247/86576	Quench Water
- 2300	10248/86577	Scrubber Water
6/20 - 1900	10249/86578	Sluice Water
- 1920	10250/86579	Quench Water
- 1845	10251/86580	Scrubber Water
6/21 - 1530	10263/86592	Coal Pile Runoff
6/22 - 1100	10252/86581	Sluice Water
- 0945	10253/86582	Quench Water
6/24 - 0830	10255/86584	Sluice Water
- 0730	10256/86585	Quench Water
- 0850	10261/86590	Plant Intake Water

* Sample Control Center Sample Codes for Dissolved Metals

TABLE A-4

SUMMARY OF OSW - SOLID WASTE SAMPLES

Date - Time (Hr.)	Sample Codes	Points
6/17 - 1415	SO482	Coal Feed
- 1530	10240	Sluice Water
- 1545	99001	Ash
6/18 - 0930	10241	Quench Water
- 1000	99002	Dust
- 0830	10242	Scrubber Water
6/19 - 0715	10243	Sluice Water
- 0730	99003	Ash
- 1330	10245	Scrubber Water
- 1330	99003	Float Tar
- 1330	99004	Sink Tar
- 1930	10246	Sluice Water
- 1935	99008	Ash
- 2300	10247	Scrubber H_2O
- 2300	99006	Float Tar
- 2300	99007	Sink Tar
6/20 - 1900	10249	Sluice H_2O
- 1915	99011	Ash
- 1845	10251	Scrubber Water
- 1845	99009	Float Tar
- 1845	99010	Sink Tar
6/21 - 1530	10261	Coal Pile Runoff
6/22 - 1100	10252	Sluice Water
- 1110	99014	Ash
- 0945	10253	Quench Water
- 1000	99015	Dust
6/24 - 0830	10255	Sluice Water
- 0835	99018	Ash
- 0730	10256	Quench Water
- 0740	99019	Dust

EGD/OSW samples were originally scheduled to be taken beginning at 1300 on the days that the gasifier ash and sluice water were taken. The scheduled time was selected as not to interfere with the facility's own sampling schedule. EGD/OSW grab samples were to be taken from the blowdown aliquots taken by the scrubber operators.

The field crew discovered that they were able to draw samples directly from the scrubber since the blowdown schedule was not being strictly followed.

Solid waste samples were not taken for the flot and sink tars for Grab No. 1 (6/18) since there was no accumulation in the reservoir. No samples (scrub water or tar) were taken on 6/22 or 6/24 due to operational difficulties with the scrubber.

Grab samples of the scrub water were tapped off the side of the reservoir. The fraction containers were filled directly. Samples of the float tar were skimmed off the top of the reservoir using a pan supplied and used by scrubber operators. The sink tar was taken from the sampling tap at the bottom of the reservoir.

A grab sample of the coal feed was taken from the feed bin above the gasifier. A 10-pound container was filled from both the north and south feed chute. The sample was taken on 6/17 at 1415 hours.

On 6/21, 1530 hours, a grab sample was taken of the coal pile runoff. The runoff was collected in one-gallon containers at the end of the concrete pad. The sample was then transferred to individual fraction containers. It was discovered after the sample was taken that caustic being used in an adjacent area was spilled and may have contaminated the runoff.

No samples were taken of the tailings pond since the plant discharge was not contained but continuously ran off the property.

SAMPLE EPISODE NO. 2--TEXAS LIGNITE

The test burn of the Texas Elgin/Butler Brick Co. lignite ran as scheduled from July 22 through July 31, 1981. The test plan proved too ambitious as the operators experienced problems controlling the burn characteristics in the gasifier. They found this lignite too friable which caused the fine bed in the gasifier to become unstable. On Friday, July 24, officials of the BOM and represented companies revised the plan to as follows:

- Hold rate (1.1 ton/hr) until Sunday, 7/26.
- Then increase rate to 1.3 to 1.4 tons/per hr and hold there until Tuesday, 7/28.
- Decide on Tuesday whether to switch to 2 x 1/4 inch feed.

As it turned out, this schedule could not be followed either. Table A-5 summarizes, chronologically, gasifier operating conditions, difficulties, and failures as well as sampling times. Table A-5 shows that the saturation air flow and lignite feed rate to the gasifier fluctuated throughout the 10 day burn as the operators tried to control the burn. Early Thursday, 7/30, the gasifier switched to coke to stabilize the fine bed. The coke was burned until Friday morning when 2 x 1/4 inch lignite was burned until the end of the test at noon.

In addition to the instability in the gasifier bed, the operators had to contend with problems with the boiler and combustor. Twice during the 10 day period (7/23, 0130-0345 and 7/26, 2030 to 2230) the gasifier was banked as personnel worked on the boiler. The combustor shut down and gas had to be flared twice during the burn on 7/29 at 0730 and 7/30 at 1900. The crew waited to take samples only after it was determined that the operating conditions were relatively stable and the produced gas was flowing through the cyclone to the combustor long enough for the samples to be representative of the operating conditions.

Mechanical problems with the gas scrubber prevented the operators from running the unit during much of the periods of gas flow to the combustor. As outlined in Table A-5, the scrubber was down 7/24 with fan problems and 7/27 through 7/30 with broken fan housing gaskets. Consequently, only one set of samples could be grabbed from the scrubber unit during the 10 day period. Tables A-6 and A-7 list the samples taken for the Texas Lignite test for wastewater samples and solid waste samples respectively.

It was apparent during the June burn that the scrubber entrainment water temperature was too high. This caused much of the tar to be carried over and condensed out in the fan housing or pass through the unit completely. The operators decided that the scrubber would work more efficiently if the temperature remained between 75-100°F. To accomplish this during the July burn, the operators maintained a continuous blowdown of the water while they constructed a cooling coil. The coil was not installed until 7/30. While the continuous blowdown of the scrubber water reduced the water temperature and improved the tar removal, the water was discharged to a drain and eventually to the tailings pond.

TABLE A-5
SUMMARY OF OPERATIONAL EVENTS DURING SAMPLING

Date	Time	Event
6/25-7/22		Banked on coke.
7/22	0930	Fired up gasifier, burning coke, gas to vent.
	1420	Loaded 2 x 3/4" lignite.
	2400	Began burning lignite, gas to vent. Rate: 123 ton/hr; saturation air flow: 608 cfm.
7/23	0130-0345	Boiler trouble, gasifier banked.
	0800	Rate=1.1 ton/hr, saturation air flow=700 cfm, gas to vent.
	1030*	Fire on top of bed in gasifier, rate less than 1 ton/hr, saturated air flow = 450 cfm, gas vented.
	1430	Gas to combustor. Rate=0.9 ton/hr, saturation air flow = 400 cfm.
	1600	Coal feed sample taken.
	1600-2400*	Scrubber started.
7/24	0000-0800*	Scrubber down - fan not balanced.
	0700	Rate=1.1 ton/hr, saturation air flow=450 cfm.
	0730	Gasifier ash sample taken. Ash absorbed 40 sec. flush of sluice water.
	0745	Cyclone quench water and dust sampled.
	1025	Sluice water sample taken 60 sec. flush used.
	1030	Rate=1.1, saturation air flow=499 cfm.
	0930-1100*	Meeting held to adjust test plan.
	1600	Coal pile runoff sample, moderate to heavy rain for 3/4 hr.
	1600-2400*	Scrubber restarted.
7/25	0830	Rate=1.3 ton/hr. Saturation air flow=450 cfm.
	0850	Cyclone quench water sampled.
	0930	Scrubber water and float tar samples taken.
	1200	Gasifier sluice water sampled, 90 sec flush used. Rate = 1.22 ton/hr, saturation air flow = 450 cfm.
7/26	0730	Rate=0.67 ton/hr, saturation air flow = 200 cfm. Rate reduced since 0430 due to uneven burning of bed. No samples taken 7/26.
	2230	Gasifier banked, boiler trouble, gas to vent.
7/27	1030	Rate=.7 ton/hr, saturation air flow = 200 cfm, gas to vent.
	1530	Combustor restarted. Rate = 1.0 ton/hr, saturation air flow = 320 cfm.
	1700	Scrubber restarted.
	1800-2400*	Scrubber down - gasket on fan housing slipped.

TABLE A-5
SUMMARY OF OPERATIONAL EVENTS DURING SAMPLING (cont'd)

Date	Time	Event
7/28	0800	Rate=1.15 ton/hr, saturation air flow = 390 cfm.
	0840	Cyclone quench water sampled.
	0905	Gasifier sluice water and ash samples taken, 90 sec. flush used.
	1500	Rate=1.3 ton/hr, saturation air flow = 390 cfm., scrubber still down.
7/29	0730	Combustor down, gas to vent.
	0800	Rate=0.57 ton/hr, saturation air flow = 206 cfm.
	1800	Plan to run out 2 x 3/4" lignite, switch to coke, then to 2 x 1/4" lignite.
7/30	0200	Rate=0.57 ton/hr (coke) gas to vent.
	0900	Rate=.75 ton/hr, saturation air flow, 500 cfm, burning coke, gas to vent.
	1600	Combustor restarted.
	1900	Combustor down.
7/31	0000-0300*	Switched to 2 x 1/4" lignite, gas to vent.
	0700	Rate=1.01 ton/hr, saturation air flow = 392 cfm, gas to vent.
	0730	Intake water sample taken.

*Approximate times

TABLE A-6

SUMMARY OF EGD - WASTEWATER SAMPLES

Date - Time (Hr.)	SCC Code	Point
7/23 - 1600	SO553	Coal Feed
7/24 - 1025	10355/86640*	Sluice Water
- 0745	10356/86641	Quench Water
- 1600	10377/86662	Coal Pile Runoff
7/25 - 0930	10357/86642	Scrubber Water
- 1200	10358/86643	Sluice Water
- 0850	10359/86644	Quench Water
7/28 - 0905	10361/86646	Sluice Water
- 0840	10362/86647	Quench Water
7/31 - 0730	10376/86661	Tap Water

*Sample Control Center Sample Codes for Dissolved Metals

TABLE A-7

SUMMARY OF OWS - SOLID WASTE SAMPLES

Date - Time (Hr).	SCC Code	Point
7/23	SO553	Coal Feed
7/24	10355	Sluice Water
	99026	Gasifier Ash
	10356	Quench Water
	99027	Cyclone Dust
	10377	Coal Pile Runoff
7/25	10357	Scrubber Water
	99028	Float Tar
	10358	Sluice Water
	99030	Gasifier Ash
7/28	10361	Sluice Water
	99033	Gasifier Ash

Due to the operating and mechanical difficulties, only three of the seven planned sets of gasifier sluice/ash and cyclone quench/dust samples were taken. Sluice water could only be taken after 7/24 when more water was used in sluicing the ash. Previous to 7/24 all of the sluice water was absorbed into the ash. Only one sample was taken of the scrubber water and the float tar. Since the scrubber was continuously blown down, no sink tar was collected and consequencly no sink tar samples were taken.

SAMPLE EPISODE NO. 3--COLORADO SUBBITUMINOUS

The test burn of Colorado subbituminous coal ran as scheduled from August 12 through August 21, 1981. During the 10-day burn, the scheduled rates were reached, and the operators experienced no major operating problems in the gasifier. Table A-8 summarizes, chronologically, gasifier operating conditions, difficulties and failures of auxiliary equipment in relationship to sampling times. Table A-9 lists the samples taken during the Colorado subbituminous test for wastewater samples. No solid waste samples were taken during this operating period.

The operators were able to increase the saturation air flow to above 1500 cfm on 8/18 using 2 x 3/4-inch subbituminous feed and to 1200 cfm with 2 x 1/4-inch feed on 8/21. The gasifier was banked twice during the burn - 8/15, 2100 to 2315, to grease the agitator and from 8/20, 2330 to 8/21, 0130. In general, the operators were pleased with the operation of the gasifier.

- A leak in the gasifier water jacket caused additional water to be mixed with the ash. This will affect the accuracy of the sluice water samples.

- The scrubber was scheduled to operate only from 0800 to 2400 each day due to a manpower shortage. Operating and mechanical problems with the scrubber caused down times during operational periods. The cooling coal, constructed and installed by the scrubber crew at the end of the July burn, was used until it broke down. The scrubber then was run without water temperature adjustments or blowdowns. The operators found the high gas temperatures raised the water temperature too much for the coils to be effective.

- The scrubber operators had to contend with tar passing through the venturi and dropping out in the fan housing. No solution to this problem was determined. On July 20, during the daily scrubber

TABLE A-8

SUMMARY OF OPERATIONAL EVENTS DURING SAMPLING

Date	Time	Event
8/12	0930	Start-up burning Coke, gas to vent.
	1430	Loaded 2 x 3/4" subbituminous coal.
	1930	Gas to combustor.
	2130	Began burning subbituminous coal.
8/13	0930	Rate 0.62 ton/hr, Sat. Air Flow=600 cfm.
	1230	Coal Feed sample taken.
	1340	Scrubber started.
	1350	Cyclone Quench Water sampled.
	1445	Gasifier Sluice Water samples taken. Gasifier water jacket leaking - adding unknown amount of water. Rate = 0.72 ton/hr Sat. Air Flow = 650 cfm.
	2000*	Scrubber down, not removing tar.
	2230-2250	Combustor down, gas to vent.
8/14	0930	Rate=0.92 ton/hr, Sat. Air Flow=800 cfm. Scrubber still down.
	1030	Coal Pile Runoff sample taken.
	1330	Scrubber restarted.
	1440	Cyclone Quench Watrer sampled.
	1540	Gasifier Sluice Water sample taken, water jacket still leaking. Rate=0.98 ton/hr, Sat. Air Flow = 809 cfm.
8/15	0900	Rate=1.03, Sat. Air Flow = 1000 cfm.
	1020	Cyclone Quench Water sampled.
	1015	Gasifier Sluice Water sample taken, 30 sec. of water added. Rate=1.05, Sat Air Flow = 1000 cfm.
	2100-2315	Gasifier banked to grease agitator, gas vented.
	2315	Combustor restarted.
8/16	0530-1300	Combustor down, gas vented.
	0830	Rate=1.06 ton/hr, Sat. Air Flow = 824 cfm. No samples taken today.
8/17	0830	Rate=1.30 ton/hr. Sat. Air Flow=1200 cfm.
	0930	Gasifier Sluice Water sample taken, 60 sec of water added to ash.
	1040	Scrubber Water sample taken.
	1100	Cyclone Quench Water sample taken
	1600	Rate=1.05 ton/hr, Sat. Air Flow-1200 cfm.

*Approximate times.

TABLE A-8

SUMMARY OF OPERATIONAL EVENTS DURING SAMPLING (cont'd)

Date	Time	Event
8/18	0830	Rate=1.83 ton/hr, Sat. Air Flow=1400 cfm.
	0930	Scrubber shut down immediately after morning restart, watch glasses in venturi cracked.
	1030	Cyclone Quench Water sampled.
	1050	Gasifier Sluice Water sampled, 45 sec. of water added. Rate=1.84 ton/hr, Sat. Air Flow - 1410 cfm.
	2400	Rate=1.78 ton/hr, Sat. Air Flow=1550 cfm.
8/19	0830	Rate=1.65 ton/hr, Sat. Air Flow=1400 cfm.
	1220	Start loading 2 x 1/4 inch subbituminous coal.
	1230-1330	Combustor down, gas to vent.
	1530	Rate=1.0 ton/hr, Sat. Air Flow=850 cfm.
	1600	Scrubber restarted after replacing watch glasses. No samples taken today.
8/20	0830	Rate=1.05 ton/hr, Sat. Air Flow=1000 cfm.
	0945	Cyclone Quench Water sampled.
	1110	Scrubber Water sampled. No Sluice Water sample, ash absorbed all the water.
	1600	Rates=1.37 ton/hr, Sat. Air Flow=1120 cfm.
	2330	Gasifier banked.
8/21	0130*	Gasifier start-up.
	0900	Rate=1.39 ton/hr, Sat. Air Flow=1200 cfm Cyclone Quench Water sampled.
	0915	Intake Water sample taken.
	1200*	Gasifier shut down.

*Approximate times.

TABLE A-9

SUMMARY OF WASTEWATER SAMPLES

Date - Time (Hr.)		SCC Code	Description
8/13	1230	SO560	Coal Feed
	1445	10487/86666	Sluice Water
	1350	10488/86667	Quench Water
8/14	1030	10509/86688	Coal Pile Runoff
	1540	10490/86669	Sluice Water
	1440	10491/86670	Quench Water
8/15	1115	10489/86668	Scrubber Water
	1120	10493/86672	Sluice Water
	1150	10494/86673	Quench Water
8/17	1040	10492/86671	Scrubber Water
	0930	10496/86675	Sluice Water
	1100	10497/86676	Quench Water
8/18	1130	10499/86678	Sluice Water
	1030	10500/86679	Quench Water
8/20	1110	10495/86674	Scrubber Water
	0945	10503/86682	Quench Water
8/21	0900	10508/86685	Quench Water
		10508/86687	Intake Water

start-up at 0930, it was discovered that the watch glasses on the venturi had cracked and caused a negative pressure to be drawn. The scrubber was shut down until 8/19, 1600 when the glass was replaced.

POLLUTANT DATA

The samples collected during each of the three episodes at Fort Snelling were analyzed as described in the sampling plan. A summary of the results of these analyses are given in Tables A-10 through A-24. Grab samples and composite sample analytical data are treated alike in the summaries.

TABLE A-10

PRIORITY ORGANIC POLLUTANTS DETECTED IN THE ASH SLUICE WATER (ug/l)

Pollutant	NORTH DAKOTA LIGNITE							TEXAS LIGNITE						
	Intake	No. of Samples	No. of Detects	Min	Mean	Med	Max	Intake	No. of Samples	No. of Detects	Min	Mean	Med	Max
2,4,6 Trichlorophenal		6	1		2				3	0				
p-chloro-m-cresol		6	4	1	2	1	5		3	0				
2,4,Dimethyl Phenol	200	6	4	1	10		30		3	0				
2,4,Dimitrotolnone		6	3	1	1	1	4		3	0				
Fluoranthene		6	1		1				3	0				
Methylene Chloride	22	6	5	1	65		276	35	3	3	14	36		69
Isophorone		6	1		1				3	0				
Naphtalene		6	2	1			4		3	0				
2-Nitrophenol		6	0						3	2		2		
4-Nitrophenol		6	1		38				3	0				
4,6-Dinitro-o-cresol		6	2	3			38		3	0				
N-nitrosophenylamine		6	0						3	2		2		
Pentachlorophenol		6	1		19				3	0				
Phenol		6	5	6	13		32	2	3	3	3	10		23
Bis (2-ethylhexyl) phthalate		6	2	4			373		3	0				
Di-n-butyl phthalate		6	3	1	1	1	2		3	2	1			1
Di-n-octyl phthalate		6	2	2			4		3	0				
Diethyl phthalate		6	3	2	2	2	2		3	0				
Benzo(a)anthracene		6	2	1			2		3	0				
Chrysene		6	1		1				3	0				
Anthracene		6	2	1	1	1	1		3	0				
Phenonthrene		6	3	1	1	1	1		3	0				
Pyrene		6	1		1				3	0				
Trichloroethylene		6	1		50				3	0				
Tetrachloroethylene		6	4	2	4		8		3	3	13	17		21

TABLE A-10 (Continued)

PRIORITY ORGANIC POLLUTANTS DETECTED IN THE ASH SLUICE WATER (g/l)

Pollutant	COLORADO SUBBITUMINOUS							ALL SAMPLES						
	Intake	No. of Samples	No. of Detects	Min	Mean	Med	Max	Intake	No. of Samples	No. of Detects	Min	Mean	Med	Max
2,4,6 Trichlorophenal		5	1		2				14	2		2		
p-chloro-m-cresol		5	0						14	4	1	2		5
2,4,Dimethyl Phenol		5	0						14	4	1	10		30
2,4,Dimitrotolnone		5	0						14	3	1	1	1	1
Fluoranthene		5	0						14	1		1		
Methylene Chloride	50	5	5	20	117		317		14	13	1	79		317
Isophorone		5	0						14	1		1		
Naphtalene		5	0						14	2	1			4
2-Nitrophenol		5	0						14	2		2		
4-Nitrophenol		5	0						14	1		38		
4,6, Dinitro-o-cresol		5	0						14	2	3			38
N-nitrosophenylamine		5	0						14	2		2		
Pentachlorophenol		5	1		18				14	2	18			19
Phenol	6	5	3	6	65		171		14	11	3	26		171
Bis (2-ethylhexyl) phthalate		5	0						14	2	4			373
Di-n-butyl phthalate		5	0						14	4	1	1	1	2
Di-n-octyl phthalate	35	6	1		10				14	3	2	5		10
Diethyl phthalate		6	0						14	3	2	2	2	2
Benzo(a)anthracene		5	1		1				14	3	1	1	1	2
Chrysene		5	0						14	1		1		
Anthracene		5	0						14	2	1	1	1	1
Phenonthrene		5	0						14	3	1	1	1	1
Pyrene		5	0						14	1		1		
Trichloroethylene		5	0						14	1		50		
Tetrachloroethylene		5	3	1	10		16		14	10	1	10		21

TABLE A-11
NONCONVENTIONAL ORGANIC AND APPENDIX C POLLUTANTS DETECTED
IN THE ASH SLUICE WATER (ug/l)

	NORTH DAKOTA LIGNITE							TEXAS LIGNITE						
Pollutant	Intake	No. of Samples	No. of Detects	Min	Mean	Med	Max	Intake	No. of Samples	No. of Detects	Min	Mean	Med	Max
Methyl ethyl ketone		6	5	<1	<1		2		3	0				
Acetone	2	6	5	<1	5		12	183	3	3	4	16		23
Benzoic Acid		6	1		19				3	0				
n-Dodecane		6	0						3	1		15		
x-picoline		6	0						3	0				
Biphenyl		6	2	<1			2		3	0				

	COLORADO SUBBITUMINOUS							ALL SAMPLES						
Pollutant	Intake	No. of Samples	No. of Detects	Min	Mean	Med	Max	Intake	No. of Samples	No. of Detects	Min	Mean	Med	Max
Methyl ethyl ketone		5	1		3				14	6	<1	1	<1	3
Acetone		5	1		7				14	9	<1	9		23
Benzoic Acid		5	0						14	1		19		
n-Dodecane		5	1		1				14	2	1			15
x-picoline		5	1		43				14	1		43		
Biphenyl		5	0						14	2	<1			2

TABLE A-12
PRIORITY METALS DETECTED IN THE ASH SLUICE WATER (μg/l)

Pollutant	NORTH DAKOTA LIGNITE							TEXAS LIGNITE						
	Intake	No. of Samples	No. of Detects	Min	Mean	Med	Max	Intake	No. of Samples	No. of Detects	Min	Mean	Med	Max
Sb	<5	6	1		250			<1	3	3	7			16
As	<1	6	5	950	2220		3500	2	3	3	88	155		219
Be	<10	6	4	10	33		50	<1	3	3	12	19		25
Cr	<10	6	3	40	63		90	2	3	3	240	363		495
Cd	100	6	0					<2	3	3	26	36		41
Cu	<10	6	6	30	385		580	<2	3	3	462	750		972
Pb	<50	6	2	300			350	<5	3	3	108	168		221
Hg	<0.1	6	4	0.1	0.2		0.2	<1	3	0				
Ni	<30	6	6	120	935		1750	<5	3	3	111	181		248
Se	<1	6	0					9	3	3	105	123		144
Ag	5	6	0					2	3	3	2	3		4
Th	<3	6	0					<1	3	3	1	2		3
Zn	20	6	6	50	730		1110	20	3	3	330	347		520

Pollutant	COLORADO SUBBITUMINOUS							ALL SAMPLES						
	Intake	No. of Samples	No. of Detects	Min	Mean	Med	Max	Intake	No. of Samples	No. of Detects	Min	Mean	Med	Max
Sb	<1	5	2	2			2		14	6	2	48		250
As	<1	5	5	8	23		34		14	13	3	898		3500
Be	<1	5	5	1	3		6		14	12	1	17		50
Cr	<1	5	5	33	212		890		14	11	33	212		890
Cd	<2	5	5	7	10		13		14	8	7	19		41
Cu	2	5	5	47	77		150		14	14	30	353		972
Pb	<5	5	5	7	14		24		14	10	3	122		350
Hg	<0.5	5	3	0.5	1.3		2.1		14	7	0.1	0.6		2.1
Ni	12	5	3	5	28		54		14	12	5	520		1750
Se	<1	5	5	2	8		14		14	8	2	51		144
Ag	4	5	5	1	2		4		14	8	1	2		4
Th	<1	5	0						14	3	1	2		3
Zn	<20	5	5	23	64		121		14	14	23	410		1110

TABLE A-13
CONVENTIONAL POLLUTANTS DETECTED IN THE ASH SLUICE WATER (mg/l)

Pollutant	NORTH DAKOTA LIGNITE							TEXAS LIGNITE						
	Intake	No. of Samples	No. of Detects	Min	Mean	Med	Max	Intake	No. of Samples	No. of Detects	Min	Mean	Med	Max
pH	7.8	6	6	10.5	11.4		12.5	7.2	3	3	12.3	12.4		12.5
BOD5	1.8	6	6	12	360		570	<1	3	3	<1	<1	<1	<1
Oil and Grease	7.8	6	6	11.4	36.3		91.8	<1	3	3	5.6	7.6		9.5
TSS	2	6	6	448	5170		8908	1.8	3	3	2940	8030		15700

Pollutant	COLORADO SUBBITUMINOUS							ALL SAMPLES						
	Intake	No. of Samples	No. of Detects	Min	Mean	Med	Max	Intake	No. of Samples	No. of Detects	Min	Mean	Med	Max
pH	6.99	5	5	9.6	10.8		11.8		14	14	9.6	11.4		12.5
BOD5	<1	5	5	<1	<1	<1	<1		14	14	<1	150	<1	570
Oil and Grease	2	5	5	<1	<1	<1	1		14	14	<1	17		91.8
TSS	17	5	5	281	2470		5710		14	14	281	4820		15700

TABLE A-14

NONCONVENTIONAL POLLUTANTS DETECTED IN THE ASH SLUICE WATER (mg/l)

Pollutant	NORTH DAKOTA LIGNITE							TEXAS LIGNITE						
	Intake	No. of Samples	No. of Detects	Min	Mean	Med	Max	Intake	No. of Samples	No. of Detects	Min	Mean	Med	Max
Acidity	<1	6	5	75	550		1520	<1	3	0				
Alkalinity	46.5	6	6	789	1787		3270	36.3	3	3	2480	2870		3100
HCO3	46.5	6	1		1310			36.3	3	0				
CO3	4	6	6	556	890		1740		3	3	1448	1700		1860
TOC	7.3	6	6	8.3	13.4		30.6	6.3	3	2	3	15.1		27.2
COD	385	5*	5	156	618		1010	33.7	3	3	62	115		177
Phenolics	<0.005	6	0					<0.005	1	1		2.8		
Br		6	1		0.2			<0.01	3	0				
Cl	0.3	5*	5	6.5	47		112	1.58	3	3	3.2	11		17.9
F	1.38	6	6	0.6	1.1		2.1	1.26	3	3	1.22	1.8		2.39
Total Solids	198	6	6	6750	49700		77400	188	3	3	8360	15100		26500
Total Volatile Solids	40	6	6	392	1020		1516	36	3	3	482	850		1488
Total Volatile Susp. Solids	1	6	6	65	515		930	<0.5	3	3	219	434		818
Total Dissolved Solids	188	6	6	5818	39100		60590	160	3	3	3490	4160		4910
CN	<0.02	6	0					<0.01	3	0				
SCN	<1	6	6	2.2	4.7		8.4	<1	3	3	1	1		2
CN /Cl2	<0.02	5	2	0.02	0.02	0.02	0.02	0.006	3	2	0.026			0.039
Kjeldahl Nitrogen	6	6	6	1	6		11	8.8	3	3	6.1	7.6		9.7
NH3	0	6	4	1	3		6	2.8	3	3	2.5	4.3		6
NO3	0.7	6	3	0.02	0.03		0.04	<2	2	2	2.6			5.9
NO2	<0.01	5	3	0.03	0.04		0.06	<0.01	3	1		0.12		
PO4	0.03	6	5	0.09	0.53		0.83	<0.035	3	3	0.67	1.14		2.01
SO4	3400	6	6	11000	53700		85000	31.7	3	3	778	1180		1570
SO3	<1	6	6	55	484		870	1.8	3	3	78	115		177
S=	41	6	5	12	75		139	0.5	3	3	6.8	25		35
Total Organic Nitrogen	6	6	5	1	6		11	6		3	0.1	3.4		7.2

TABLE A-14 (continued)
NONCONVENTIONAL POLLUTANTS DETECTED IN THE ASH SLUICE WATER (mg/l)

	NORTH DAKOTA LIGNITE							TEXAS LIGNITE						
Pollutant	Intake	No. of Samples	No. of Detects	Min	Mean	Med	Max	Intake	No. of Samples	No. of Detects	Min	Mean	Med	Max
Ca	25.5	6	6	403	979		1790	21.1	3	3	1310	1470		1630
Mg	3.21	6	6	48	326		753	3.32	3	3	26	47		74
Na	3.2	6	6	1130	11050		15700	7.3	3	3	43	124		278
Al	<0.2	6	6	14.8	541		1100	0.575	3	3	95	153		215
Mn	0.006	6	6	0.33	2.36		4.09	0.015	3	3	1.54	2.33		3.70
V	<0.005	6	6	0.012	0.62		1.04	<0.001	3	3	0.56	0.82		1.07
B	0.13	6	6	4.39	31.1		50.6	0.143	3	3	7.6	11.4		13.7
Ba	<0.01	6	6	0.3	1.13		2.3	0.013	3	3	1.21	1.78		2.08
Mo	0.4	6	1		1.4			<0.035	3	3	3.09	4.30		5.27
Sn	<0.06	6	0					<0.025	3	3	0.59	0.67		0.73
Y	<0.01	6	1		0.02			<0.003	3	3	0.17	0.24		0.30
Co	<0.05	6	4	0.1	0.18		0.30	<0.05	3	3	0.069	0.125		0.157
Fe	0.175	6	6	14.3	653		1340	0.051	3	3	28.3	45.5		61.9
Ti	<0.004	6	6	0.32	8.95		21.1	0.002	3	3	22.7	32.7		42

TABLE A-14 (Continued)
NONCONVENTIONAL POLLUTANTS DETECTED IN THE ASH SLUICE WATER (mg/l)

	COLORADO SUBBITUMINOUS							ALL SAMPLES						
Pollutant	Intake	No. of Samples	No. of Detects	Min	Mean	Med	Max	Intake	No. of Samples	No. of Detects	Min	Mean	Med	Max
Acidity	<1	5	0						14	5	75	550		1520
Alkalinity	39	5	5	151	533		1310		14	14	151	1570		3270
HCO3	39	5	2	24			53		14	3	24	462		1310
CO3		5	5	111	285		852		14	14	111	846		1860
TOC	3	5	4	2.8	10		17		14	12	2.8	12.5		30.6
COD	16	5	5	32	32		32		13	13	32	276		1010
Phenolics	<0.005	5	0						12	1		2.8		
Br		5	0						14	1		0.2		
Cl	18	5	5	18	25		37		13	13	3.2	30		112
F	2.4	5	5	0.6	1.3		2.1		14	14	0.6	1.3		239
Total Solids	200	5	5	2520	3800		6920		14	14	2520	25900		77400
Total Volatile Solids	186	5	5	129	860		3700		14	14	129	930		3700
Total Volatile Susp. Solids	14	5	5	26	104		240		14	14	26	351		930
Total Dissolved Solids	188	5	5	272	936		2390		14	14	272	18000		60590
CN	<0.02	5	2	0.02	0.02	0.02	0.02		14	2	0.02	0.02	0.02	0.02
SCN	<1	5	0						14	9	1	3.6		8.4
CN /Cl2	0.11	4	2	0.02			0.1		12	6	0.02	0.03	0.02	0.1
Kjeldahl Nitrogen	3	5	4	1	3.2		6		14	13	1	5.5		11
NH3	1	5	4	1	2		4		14	11	1	3		6
NO3		5	3	0.9			2.5		13	8	0.02	1.7		5.9
NO2	0.04	5	5	0.03			0.06		13	9	0.03	0.05		0.12
PO4		5	5	0.24	28.4		101		14	13	0.09	11.4		101
SO4	<2	5	5	52	300		605		14	14	52	23400		85000
SO3		5	2	7			17		14	11	7	297		870
S=	1	5	5	3	5		8		14	13	3	36		139
Total Organic Nitrogen	2	5	3	1	2		3		14	11	0.1	4.3		11

TABLE A-14 (continued)
NONCONVENTIONAL POLLUTANTS DETECTED IN THE ASH SLUICE WATER (mg/l)

Pollutant	COLORADO SUBBITUMINOUS							ALL SAMPLES						
	Intake	No. of Samples	No. of Detects	Min	Mean	Med	Max	Intake	No. of Samples	No. of Detects	Min	Mean	Med	Max
Ca	19.6	5	5	104	309		533		14	14	104	845		1790
Mg	3.5	5	5	5.8	16.4		36		14	14	5.8	156		753
Na	5.05	5	5	10.7	103		294		14	14	10.7	4800		15700
Al	0.702	5	5	7.5	49		89		14	14	7.5	282		1100
Mn	0.016	5	5	0.062	0.11		0.192		14	14	0.062	1.55		4.09
V	0.002	5	5	0.024	0.10		0.13		14	14	0.012	0.48		1.07
B	0.062	5	5	1.97	3.04		4.52		14	14	1.97	16.8		50.6
Ba	0.004	5	5	0.64	2.17		4.77		14	14	0.3	1.65		4.77
Mo	<0.035	5	5	0.15	0.38		0.648		14	9	0.15	1.80		5.27
Sn	<0.025	5	5	0.141	0.22		0.291		14	8	0.14	0.39		0.73
Y	<0.03	5	5	0.007	0.038		0.076		14	9	0.007	0.103		0.30
Co	<0.05	5	0						14	7	0.069	0.157		0.30
Fe	0.035	5	5	7.7	11.6		20.1		14	14	7.7	293		1340
Ti	<0.002	5	5	0.36	2.61		4.79		14	14	0.32	11.8		32.7

TABLE A-15
PRIORITY ORGANIC POLLUTANTS DETECTED IN THE CYCLONE QUENCH WATER (μg/l)

Pollutant	NORTH DAKOTA LIGNITE							TEXAS LIGNITE						
	Intake	No. of Samples	No. of Detects	Min	Mean	Med	Max	Intake	No. of Samples	No. of Detects	Min	Mean	Med	Max
Acenaphthene		6	5	<1	1		2		3	2	1			4
Benezene		6	1		60				3	1		142		
2,4,6-Trichlorophenol		6	2	<1			49		3	0				
p-chloro-m-cresol		6	4	6	17		31		3	1		6		
Chloroform		6	1		21					0				
2,4-Dichlorophenol		6	1		11					0				
2,4,Dimethylphenol		6	6	243	608		1180		3	3	34	76		110
2,4,Dinitrotoluene		6	3	<1	4		8		3	0				
2,6-Dinitrotoluene		6	1		2					0				
1,2-Diphenylhydrazine		6	3	5	11		19			0				
Ethylbenzene		6	1		<1					1		2		
Fluoranthene		6	6	<1	111		655		3	3	2	8		18
Methylene chloride		6	6	5	195		1020		3	2	10			37
Methyl chloride		6	1		24				3	0				
Isophorone		6	2	9	14		18		3	1		17		
Naphtalene		6	6	14	310		1550		3	3	32	36		40
4-Nitrophenol		6	4	<1	1	<1	3		3	0				
2,4-Dinitrophenol		6	1		41				3	0				
4,6-Dinitro-o-cresol		6	4	<1	16		55		3	0				
N-nitrosophenylamine		6	2	8			16		3	3	4	6		8
Pentachlorophenol		6	3	<1	52		152		3	0				
Phenol		6	6	170	584		1080		3	3	780	2720		5760
Bis (2-ethylhexyl) phthalate		6	2	<1			4		3	0				
Di-n-butyl phthalate		6	4	<1			6		3	2	2			21
Di-n-octyl phthalate		6	0						3	3	31	66		86
Diethyl phthalate		6	3	2	6		9		3	1		2		
Benzo(a)anthracene		6	2	3			10		3	1		2		
Benzo(a) pyrene		6	1		3				3	1		<1		
Chrysene		6	3	<1	2		5		3	1		2		
Anthracene		6	6	2	11		36		3	3	2	3		4
Fluorene		6	6	4	18		34		3	2	8			11
Phenanthrene		6	6	4	18		41		3	3	2	4		6
Pyrene		6	6	<1	5		11		3	3	1	2	2	2
Toluene		6	2	<1			2		3	1		59		

TABLE A-15 (Continued)
PRIORITY ORGANIC POLLUTANTS DETECTED IN THE CYCLONE QUENCH WATER (g/l)

Pollutant	COLORADO SUBBITUMINOUS							ALL SAMPLES						
	Intake	No. of Samples	No. of Detects	Min	Mean	Med	Max	Intake	No. of Samples	No. of Detects	Min	Mean	Med	Max
Acenaphthene		7	0						16	7	<1	1		4
Benezene		7	1		162				16	3	60	121		162
2,4,6-Trichlorophenol		7	0						16	2	<1			49
p-chloro-m-cresol		7	0						16	5	6	15		31
Chloroform		7	0						16	1		21		
2,4-Dichlorophenol		7	0						16	1		11		
2,4,Dimethylphenol		7	7	104	551		1540		16	16	34	483		1540
2,4,Dinitrotoluene		7	0						16	3	<1	4		8
2,6-Dinitrotoluene		7	0						16	1		2		
1,2-Diphenylhydrazine		7	0						16	3	5	11		19
Ethylbenzene		7	4	3	4		8		16	6	<1	4		8
Fluoranthene		7	0						16	9	<1	77		655
Methylene chloride		7	7	23	76		118		16	15	5	116		1020
Methyl chloride		7	0						16	1		24		
Isophorone		7	0						16	3	9	15		18
Naphtalene		7	6	10	21		43		16	15	10	139		1550
4-Nitrophenol		7	0						16	4	<1	1	<1	3
2,4-Dinitrophenol		7	0						16	1		41		
4,6-Dinitro-o-cresol		7	0						16	4	<1	16		55
N-nitrosophenylamine		7	1		23				16	6	4	11		23
Pentachlorophenol		7	1		13				16	4	<1	42		152
Phenol		7	7	710			5470		16	16	170	2570		5760
Bis (2-ethylhexyl) phthalate		7	1		3				16	3	<1	2		4
Di-n-butyl phthalate		7	3	1	9		23		16	9	<1	6		23
Di-n-octyl phthalate		7	0						16	3	31	66		86
Diethyl phthalate		7	0						16	4	2	5		9
Benzo(a)anthracene		7	2	<1			3		16	5	<1	4		10
Benzo(a)pyrene		7	1		4				16	3	<1	2		4
Chrysene		7	2	2			3		16	6	<1	2		5
Anthracene		7	2	2	5		3		16	11	2	7		36
Fluorene		7	6	3	5		7		16	14	2	11		34
Phenanthrene		7	3	3	5		7		16	12	2	11		41
Pyrene		7	3	2	2	2	3		16	12	<1	4		2
Toluene		7	0						16	3	<1	20		59

TABLE A-16
NONCONVENTIONAL ORGANIC AND APPENDIX C POLLUTANTS DETECTED
IN THE CYCLONE QUENCH WATER (ug/l)

	NORTH DAKOTA LIGNITE							TEXAS LIGNITE						
Pollutant	Intake	No. of Samples	No. of Detects	Min	Mean	Med	Max	Intake	No. of Samples	No. of Detects	Min	Mean	Med	Max
Methy ethyl ketone		6	6	28	146		533		2	2	7			64
Acetone		6	6	712	2240		3600		2	2	76			384
Dibenzofuran		6	6	4	18		23		3	3	150	167		180
n-Dodecane		6	0						3	1		19		
-Terpinol		6	1		10				3	1		8		
Picoline		6	1		20				3	0				
Biphenyl		6	6	4	19		70		3	3	2	3	2	4
Hexanoic Acid		6	1		1				3	0				

	COLORADO SUBBITUMINOUS							ALL SAMPLES						
Pollutants	Intake	No. of Samples	No. of Detects	Min	Mean	Med	Max	Intake	No. of Samples	No. of Detects	Min	Mean	Med	Max
Methy ethyl ketone		7	7	25	80		141		15	15	7	100		533
Acetone		7	7	83			557		15	15	76	320		3600
Dibensofuran		7	0						15	15	4	67		180
n-Dodecane		7	1		7				15	15	7			19
-Terpinol		7	0						15	15	8			10
-Picoline		7	5	19	101				15	15	19	88		347
Biphenyl		7	1		2				15	15	2	13		70
Hexanoic Acid		7	0						15	15		1		

TABLE A-17
PRIORITY METALS DETECTED IN THE CYCLONE QUENCH WATER (ug/l)

Pollutant	NORTH DAKOTA LIGNITE						TEXAS LIGNITE					
	Intake	No. of Samples	No. of Detects	Min	Mean	Med	Max	Intake	No. of Samples	No. of Detects	Min	Mean	Med	Max
Sb		6	0						3	2	1	1	1	1
As		6	5	20	60		100		3	3	4	9		17
Be		6	0						3	0				
Cr		6	5	10	16		20		3	3	2	6		10
Cd		6	2	100	100	100	100		3	2	2	2	2	2
Cu		6	2	30	30	30	30		3	3	12	13		15
Pb		6	1		50				3	2	7	7	7	7
Hg		6	4	0.1	0.1	0.1	0.2		3	0				
Ni		6	1	60					3	0				
Se		6	5	40	74		150		3	3	4	8		12
Ag		6	0						3	3	1	2	2	2
Th		6	0						3	0				
An		6	6	45	68		105		3	0				

Pollutants	COLORADO SUBBITUMINOUS							ALL SAMPLES						
	Intake	No. of Samples	No. of Detects	Min	Mean	Med	Max	Intake	No. of Samples	No. of Detects	Min	Mean	Med	Max
Sb		7	5	1	2		4		16	7	1	1	1	4
As		7	7	4	6		9		16	15	4	24		100
Be		7	0						16	0				
Cr		7	7	10	17		23		16	15	3	14		23
Cd		7	4	2	2	2	3		16	8	2	27	2	100
Cu		7	7	6	17		29		16	12	6	18		30
Pb		7	7	20	59		164		16	10	7	48		164
Hg		7	0						16	4	0.1	0.1	0.1	0.2
Ni		7	4	8	30		76		16	5	8	36		76
Se		7	7	1	3		6		16	15	1	28		150
Ag		7	7	1	2	2	3		16	10	1	2	2	3
Th		7	0						16	0				
Zn		7	7	39	76		154		16	13	39	72		154

TABLE A-18
CONVENTIONAL POLLUTANTS DETECTED IN THE CYCLONE QUENCH WATER (mg/l)

Pollutant	NORTH DAKOTA LIGNITE							TEXAS LIGNITE						
	Intake	No. of Samples	No. of Detects	Min	Mean	Med	Max	Intake	No. of Samples	No. of Detects	Min	Mean	Med	Max
pH		6	6	7.5	8.0		8.6		3	3	6.8	7.3		7.7
BOD		6	6	68	135		230		3	3	120	271		540
Oil & Grease		6	5	2.9	27		59		3	2	2.9			5.8
TSS		6	6	18	430		1468		3	3	16	105		264

Pollutants	COLORADO SUBBITUMINOUS							ALL SAMPLES						
	Intake	No. of Samples	No. of Detects	Min	Mean	Med	Max	Intake	No. of Samples	No. of Detects	Min	Mean	Med	Max
pH		7	7	6.4	6.8		7.4		16	16	6.4	7.3		8.6
BOD		7	4	46	114		155		16	13	46	160		540
Oil & Grease		7	0						16	7	2.9	20		59
TSS		7	7	35	292		958		16	16	16	309		1468

TABLE A-19
NONCONVENTIONAL POLLUTANTS DETECTED IN THE CYCLONE QUENCH WATER (mg/l)

	NORTH DAKOTA LIGNITE							TEXAS LIGNITE						
Pollutant	Intake	No. of Samples	No. of Detects	Min	Mean	Med	Max	Intake	No. of Samples	No. of Detects	Min	Mean	Med	Max
Acidity		6	6	8	72		150		3	0				
Alkalinity		6	6	67	172		279		3	3	41	52		58
HCO3		6	6	67	160		237		3	3	41	52		58
CO3		6	2	16			41		3	0				
TOC		6	6	42	93		127		3	3	28	118		258
COD		6	6	234	421		506		3	3	62	102		130
Phenolics		6	5	0.02	4.57		22.7		3	1		2.55		
Br		6	0						3	1		1.03		
Cl		6	6	2.9	4.8		10		3	3	1.32	5.68		13.1
F		6	6	1.4	1.55		1.77		3	3	1.32	1.34		1.35
Total Solids		6	6	260	1164		2656		3	3	1248	282		314
Total Volatile Solids		6	6	62	465		1032		3	3	76	146		268
Total Volatile Susp. Solids		6	6	10	279		964		3	3	10	19		24
Total Dissolved Solids		6	6	296	541		784		3	3	156	199		254
CN		6	3	0.04	0.05	0.05	0.05		3	3	0.03	0.07		0.1
SCN		6	6	2.7	5.3		8.6		3	1		1		
CN /Cl2		6	6	0.02	0.07		0.13		3	3	0.067	0.14		0.265
Kjeldahl Nitrogen		6	6	9	23		38		2	2	10.7			16.4
NH3		6	5	1	10		25		2	2	6.3	6.3	6.3	6.3
NO3		6	4	0.15	0.35		0.8		3	2	2.0			2.7
NO2		6	2	0.03			0.45		3	2	0.03			0.04
PO4		6	6	0.04	0.68		2.7		3	3	0.046	0.055		0.06
SO4		6	5	84	132		182		2	2	41			75
SO3		6	3	2.1	6.4		14		3	3	1.1	1.3		1.6
S=		6	6	2	10.6		32		3	3	2	3.1		5.2
Total Organic Nitrogen		6	6	7	14		23		2	2	4.3			10.1

TABLE A-19 (continued)
NONCONVENTIONAL POLLUTANTS DETECTED IN THE CYCLONE QUENCH WATER (mg/l)

Pollutant	NORTH DAKOTA LIGNITE							TEXAS LIGNITE						
	Intake	No. of Samples	No. of Detects	Min	Mean	Med	Max	Intake	No. of Samples	No. of Detects	Min	Mean	Med	Max
Ca		6	6	19.8	41.1		89.1		3	3	26	27.9		30.8
Mg		6	6	4.7	10.2		18.2		3	3	3.69	4.28		4.68
Na		6	6	17	78.2		104		3	3	7.65	11.6		15
Al		6	6	0.6	10.4		23.2		3	3	0.806	1.27		2
Mn		6	6	0.043	0.073		0.216		3	3	0.042	0.051		0.065
V		6	5	0.007	0.025		0.038		3	2	0.003	0.003	0.003	0.003
B		6	6	0.15	0.66		1.15		3	3	0.144	0.188		0.21
Ba		6	5	0.8	1.83		3.8		3	3	0.075	0.185		0.343
Mo		6	1		0.5				3	0				
Sn		6	0						3	3	0.035	0.039		0.044
Y		6	0						3	0				
Co		6	0						3	0				
Fe		6	6	2	14.9		30.8		3	3	1.79	2.05		2.33
Ti		6	6	0.009	0.206		0.433		3	3	0.024	0.045		0.06

TABLE A-19 (Continued)
NONCONVENTIONAL POLLUTANTS DETECTED IN THE CYCLONE QUENCH WATER (mg/l)

	COLORADO SUBBITUMINOUS							ALL SAMPLES						
Pollutant	Intake	No. of Samples	No. of Detects	Min	Mean	Med	Max	Intake	No. of Samples	No. of Detects	Min	Mean	Med	Max
Acidity		7	0						16	6	8	72		150
Alkalinity		7	7	35	153		392		16	16	35	141		392
HCO3		7	7	35	153		392		16	16	35	136		392
CO3		7	0						16	2	16			41
TOC		7	7	3	23		35		16	16	3	67		258
COD		7	7	32	165		288		16	16	32	250		506
Phenolics		7	7	0.006	0.017		0.023		16	13	0.006	1.96		22.7
Br		7	0						16	1		1.03		
Cl		7	6	7	18.7		47		16	15	1.32	10.5		47
F		7	7	1.2	3.1		73		16	16	1.2	2.22		7.3
Total Solids		*6	6	234	516		994		15	15	248	728		2656
Total Volatile Solids		*6	6	35	342		958		15	15	35	352		1032
Total Volatile Susp. Solids		7	7	10	241		838		16	16	10	214		964
Total Dissolved Solids		*6	6	156	204		258		15	15	156	338		784
CN		7	6	0.04	0.13		0.34		16	12	0.03	0.09		0.34
SCN		7	1		1				16	8	1	4.2		8.6
CN /Cl2		7	7	0.03	0.10		0.15		16	16	0.02	0.10		0.265
Kjeldahl Nitrogen		7	7	8	15		21		15	15	8	18		38
NH3		7	7	4	9		14		15	15	1	8.3		25
NO3		6	5	1.3	1.6		1.9		15	11	0.15	1.3		2.7
NO2		5	4	0.02	0.05		0.07		14	8	0.02	0.09		0.45
PO4		7	7	0.23	1.08		3.68		16	16	0.04	0.74		3.68
SO4		5	5	17	27		40		13	13	17	70		182
SO3		7	0						16	6	1.1	3.8		14
S=		7	7	2	2.7		4		16	16	2	5.7		32
Total Organic Nitrogen		7	7	2	6		9		15	15	2	9		23

TABLE A-19 (continued)
NONCONVENTIONAL POLLUTANTS DETECTED IN THE CYCLONE QUENCH WATER (mg/l)

	COLORADO SUBBITUMINOUS							ALL SAMPLES						
Pollutant	Intake	No. of Samples	No. of Detects	Min	Mean	Med	Max	Intake	No. of Samples	No. of Detects	Min	Mean	Med	Max
Ca		7	7	21.3	24.0		29.3		16	16	19.8	31.2		89.1
Mg		7	7	4.44	5.16		6.36		16	16	3.69	6.89		18.2
Na		7	7	5.13	8.41		13.8		16	16	5.13	35.2		104
Al		7	7	1.28	3.23		7.04		16	16	0.6	5.55		23.2
Mn		7	7	0.047	0.064		0.076		16	16	0.042	0.072		0.216
V		7	7	0.004	0.007		0.013		16	14	0.003	0.013		0.038
B		7	5	0.266	0.624		1.2		16	14	0.144	0.546		1.2
Ba		7	7	0.211	0.415		0.904		16	15	0.075	0.842		3.8
Mo		7	3	0.036	0.047		0.058		16	4	0.036	0.16		0.5
Sn		7	7	0.038	0.064		0.082		16	10	0.035	0.056		0.082
Y		7	1		0.007				16	1		0.007		
Co		7	0						16	0				
Fe		7	7	1.48	2.85		5.9		16	16	1.48	7.22		30.8
Ti		7	7	0.072	0.208		0.472		16	16	0.009	0.177		0.472

TABLE A-20

PRIORITY ORGANIC POLLUTANTS DETECTED IN THE SCRUBBER WATER (ug/l)

Pollutant	NORTH DAKOTA LIGNITE							TEXAS LIGNITE						
	Intake	No. of Samples	No. of Detects	Min	Mean	Med	Max	Intake	No. of Samples	No. of Detects	Min	Mean	Med	Max
Acenaphthene		4	0						1	1		55		
Benezene		4	0						0	1		288		
p-chloro-m-cresol		4	1		84				1	0				
2,4-Dimethyl phenol		4	4	1130	55300		197000		1	1		1140		
2,4-Dinitrotoluene		4	2	257			1570		1	0				
2,5-Dinitrotoluene		4	1		2				1	0				
1,2-Diphonylhydrazine		4	3	1	32		50		1	0				
Ethylbenzene		4	1		14880				1	0				
Methylene chloride		4	4	53	216		531		1	1		122		
Methyl chloride		4	1		36				1	0				
Naphtalene		4	4	378	559		836		1	1		998		
Nitrobenzene		4	1		737				1	0				
4-Nitrophenol		4	1		33				1	0				
N-Nitrosodiphenylamine		4	2	286			482		1	1		75		
Phenol		4	4	3220	93000		286000		1	1		34200		
Bis(2-ethylhexyl)phthalate		4	2	48			269		1	0				
Butylbenzyl phthalate		4	1		7				1	0				
Di-n-Butyl phthalate		4	3	78	118		151		1	0				
Di-n-Octyl phthalate		4	3	560	1080		1850		1	1		5		
Diethyl phthalate		4	2	4			31		1	0				
Benzo(a)anthracene		4	1		399				1	1		29		
Benzo(a)pyrene		4	0						1	0				
Chrysene		4	1		284				1	1		59		
Acenaphthalene		4	3	146	479		1010		1	1		168		
Anthracene		4	4	69	152		280		1	0				
Fluorene		4	1		378				1	0				
Phemanthrene		4	4	171	296		570		1	0				
Pyrene		4	1		180				1	0				
Toluene		4	0						1	1		292		

TABLE A-20 (Continued)

PRIORITY ORGANIC POLLUTANTS DETECTED IN THE SCRUBBER WATER (ug/l)

	COLORADO SUBBITUMINOUS							ALL SAMPLES						
Pollutant	Intake	No. of Samples	No. of Detects	Min	Mean	Med	Max	Intake	No. of Samples	No. of Detects	Min	Mean	Med	Max
Acenaphthene		3	0	567	738		896		8	1		55		
Benezene		3	3						8	4	288	625		896
p-chloro-m-cresol		3	0	12300			130000		8	1		84		
2,4-Dimethyl phenol		2	2						8	7	1130	52100		197000
2,4-Dinitrotoluene		3	0						8	2	257			1570
2,5-Dinitrotoluene		3	0						8	1		2		
1,2-Diphonylhydrazine		3	0						8	3	1	32		50
Ethylbenzene		3	0						8	1		14880		
Methylene chloride		3	3	32	48		70		8	8	32	141		531
Methyl chloride		3	0						8	1		36		
Naphtalene		3	0						8	5	378	669		998
Nitrobenzene		3	0						8	1		737		
4-Nitrophenol		3	0						8	1		33		
N-Nitrosodiphenylamine		3	0						8	3	75	281		482
Phenol		2	2	34000			754000		8	7	3320	214000		754000
Bis(2-ethylhexyl)phthalate		3	0						8	2	48			269
Butylbenzyl phthalate		3	0						8	1		7		
Di-n-Butyl phthalate		3	0						8	3	78	118		151
Di-n-Octyl phthalate		3	0						8	4	5	812		1850
Diethyl phthalate		3	0						8	2	4			31
Benzo(a)anthracene		3	0		<50				8	2	29			399
Benzo(a)pyrene		3	1		<50				8	1		<50		
Chrysene		3	0						8	2	59			284
Acenaphthalene		3	1		1810				8	5	146	683		1810
Anthracene		3	1		1310				8	6	69	374		1310
Fluorene		3	1		394				8	2	378			394
Phemanthrene		3	1		473				8	5	171	272		570
Pyrene		3	1		179				8	2	179			180
Toluene		3	3	398	448		490		8	4	292	409		490

TABLE A-21
NONCONVENTIONAL ORGANICS DETECTED IN THE SCRUBBER WATER (ug/l)

Pollutant	NORTH DAKOTA LIGNITE							TEXAS LIGNITE						
	Intake	No. of Samples	No. of Detects	Min	Mean	Med	Max	Intake	No. of Samples	No. of Detects	Min	Mean	Med	Max
Methyl ethyl ketone		4	4	929	1240		1590		1	1		1730		
Acetone		4	4	10200	14000		17400		1	1		3570		
Dibensofuran		4	1		33				1	1		400		
n-Dodecane		4	0						1	1		3060		
_-Terpinol		4	1		<20				1	0				

Pollutant	COLORADO SUBBITUMINOUS							ALL SAMPLES						
	Intake	No. of Samples	No. of Detects	Min	Mean	Med	Max	Intake	No. of Samples	No. of Detects	Min	Mean	Med	Max
Methyl ethyl ketone		3	3	279	2650		4400		8	8	279	1670		4400
Acetone		3	3	1060	12500		21700		8	8	1060	12200		21700
Dibensofuran		3	0						8	2	33			400
n-Dodecane		3	0						8	1		3060		
_-Terpinol		3	0						8	1		<20		

TABLE A-22
PRIORITY METALS DETECTED IN THE SCRUBBER WATER (ug/l)

Pollutant	NORTH DAKOTA LIGNITE							TEXAS LIGNITE						
	Intake	No. of Samples	No. of Detects	Min	Mean	Med	Max	Intake	No. of Samples	No. of Detects	Min	Mean	Med	Max
Sb		4	0						1	0				
As		4	4	47	55		64		1	1		8		
Be		4	0						1	0				
Cr		4	4	20	35		50		1	1		6		
Cd		4	0						1	0				
Cu		4	0						1	1		6		
Pb		4	0						1	0				
Hg		4	0						1	0				
Ni		4	4	40	40	40	40		1	0				
Se		4	2	10			120		1	1		170		
Ag		4	0						1	1		5		
Th		4	0						1	0				
Zn		4	4	40	49		65		1	0				

Pollutant	COLORADO SUBBITUMINOUS							ALL SAMPLES						
	Intake	No. of Samples	No. of Detects	Min	Mean	Med	Max	Intake	No. of Samples	No. of Detects	Min	Mean	Med	Max
Sb		3	3	5	30		74		8	3	5	30		74
As		3	3	8	35		80		8	8	8	42		80
Be		3	0						8	0				
Cr		3	3	16	28		38		8	8	6	29		50
Cd		3	2	3	3	3	3		8	2	3	3	3	3
Cu		3	3	29	107		260		8	4	6	81		260
Pb		3	3	36	57		69		8	3	3.6	57		96
Hg		3	3	0.7	2.4		5.4		8	3	0.7	2.4		5.4
Ni		3	1		9				8	5	9	34		40
Se		3	3	52	216		422		8	6	10	159		422
Ag		3	2	3			4		8	3	3	4		5
Th		3	1		2				8	1		2		
Zn		3	3	73	187		360		8	7	40	108		360

TABLE A-23
Conventional Pollutants Detected in the Scrubber Water (mg/l)

Pollutant	NORTH DAKOTA LIGNITE							TEXAS LIGNITE						
	Intake	No. of Samples	No. of Detects	Min	Mean	Med	Max	Intake	No. of Samples	No. of Detects	Min	Mean	Med	Max
pH		4	4	8.3	8.3		8.4		1	1		6.8		
BOD		4	4	1300	3000		4100		1	1		2240		
Oil & Grease		3	3	576	1110		1375		1	1		1000		
TSS		4	4	46	576		1030		1	1		240		

Pollutant	COLORADO SUBBITUMINOUS							ALL SAMPLES						
	Intake	No. of Samples	No. of Detects	Min	Mean	Med	Max	Intake	No. of Samples	No. of Detects	Min	Mean	Med	Max
pH		3	3	8.4	8.5		8.7		8	8	6.8	8.2		8.7
BOD		3	3	9450	15800		25000		8	8	1300	7710		25000
Oil & Grease		3	3	418	846		1490		7	7	418	980		1490
TSS		3	3	17	76		186		8	8	17	346		1030

TABLE A-24
NONCONVENTIONAL POLLUTANTS DETECTED IN THE SCRUBBER WATER (mg/l)

Pollutant	NORTH DAKOTA LIGNITE							TEXAS LIGNITE						
	Intake	No. of Samples	No. of Detects	Min	Mean	Med	Max	Intake	No. of Samples	No. of Detects	Min	Mean	Med	Max
Acidity		4	0						1	0				
Alkalinity		4	4	2400	3140		3550		1	1		1160		
HCO3		4	4	2400	3140		3550		1	1		754		
CO3		4	0						1	1		315		
TOC		3	3	315	6080		10100		1	1		207		
COD		4	4	12500	55800		78200		0	0				
Phenolics		4	4	28.7	35.5		43		1	1		0.66		
Br		4	0						1	0				
Cl		3	3	100	423		1070		1	1		26.3		
F		4	4	7.3	19.5		33.6		1	1		1.78		
Total Solids		4	4	9440	12300		18600		1	1		2310		
Total Volatile Solids		4	4	89	6430		9127		1	1		2220		
Total Volatile Susp. Solids		4	4	39	518		980		1	1		235		
Total Dissolved Solids		4	4	5112	7410		12000		1	1		978		
CN		4	4	0.49	0.88		1.4		1	1		35		
SCN		4	4	590	1150		1900		1	1		18		
CN /Cl2		4	4	0.02	0.74		1.5		1	1		1.98		
Kjeldahl Nitrogen		4	4	9509	1210		1630		0	0				
NH3		4	4	37	1060		1560		0	0				
NO3		4	4	1.43	11.2		36		1	0				
NO2		4	3	0.56	2.02		3.5		1	0				
PO4		4	4	0.17	0.67		1.08		1	1		0.157		
SO4		4	2	880			4400		1	1		1310		
SO3		4	4	190	210	210	230		1	1		400		
S=		4	3	250	303		340		1	1		220		
Total Organic Nitrogen		4	4	70	152		358		0	0				

TABLE A-24 (continued)
NONCONVENTIONAL POLLUTANTS DETECTED IN THE SCRUBBER WATER (mg/l)

	NORTH DAKOTA LIGNITE							TEXAS LIGNITE						
Pollutant	Intake	No. of Samples	No. of Detects	Min	Mean	Med	Max	Intake	No. of Samples	No. of Detects	Min	Mean	Med	Max
Ca		4	4	10500	15800		23200		1	1		21100		
Mg		4	4	10500	12700		17100		1	1		3300		
Na		4	4	8500	19500		31400		1	1		8600		
Al		4	4	2800	3850		5200		1	1		2200		
Mn		4	4	46	75		106		1	0				
V		4	0						1	1		9		
B		4	4	630	762		930		1	1		725		
Ba		4	4	200	300		400		1	1		114		
Mo		4	0						1	1		36		
Sn		4	0						1	1		50		
Y		4	0						1	0				
Co		4	0						1	0				
Fe		4	4	6600	7160		8100		1	1		146		
Ti		4	2	4			9		1	1		434		

TABLE A-24 (Continued)
NONCONVENTIONAL POLLUTANTS DETECTED IN THE SCRUBBER WATER (mg/l)

	COLORADO SUBBITUMINOUS							ALL SAMPLES						
Pollutant	Intake	No. of Samples	No. of Detects	Min	Mean	Med	Max	Intake	No. of Samples	No. of Detects	Min	Mean	Med	Max
Acidity		3	0						8	0				
Alkalinity		3	3	2210	2550		2740		8	8	1160	2670		3550
HCO3		3	3	1830	2190		2730		8	8	754	2480		3550
CO3		3	3	7	383		672		8	4	7	366		672
TOC		3	3	1150	4130		6570		7	7	207	4380		10100
COD		3	3	24000	35200		49600		7	7	12500	46900		78200
Phenolics		3	3	17.8	23.2		29.8		8	8	0.66	26.5		43
Br		3	0						8	0				
Cl		3	1		75				7	5	26.3	274		1070
F		3	3	276	971		1740		8	8	1.78	374		1740
Total Solids		3	3	4300	4900		5970		8	8	2310	8260		18600
Total Volatile Solids		3	3	3490	3710		4140		8	8	89	4880		9127
Total Volatile Susp. Solids		3	3	14	69		170		8	8	14	314		980
Total Dissolved Solids		3	3	4110	4810		5480		8	8	978	5630		12000
CN		3	3	0.16	5.2		8.09		8	8	0.16	6.77		35
SCN		3	3	440	857		1070		8	8	18	896		1900
CN /Cl2		3	3	0.19	0.35		0.56		8	8	0.02	0.75		1.98
Kjeldahl Nitrogen		3	3	987	1370		1860		7	7	987	1280		1860
NH3		3	3	932	1300		1770		7	7	37	1160		1770
NO3		3	2	75			80		8	6	1.43	33.3		80
NO2		3	0						8	3	0.56	2.02		3.5
PO4		3	1		1.12				8	6	0.157	0.66		1.12
SO4		3	3	811	1280		1770		8	6	811	1740		4400
SO3		3	3	25	267		575		8	8	25	255		575
S=		3	3	4	14		23		8	7	4	130		340
Total Organic Nitrogen		3	3	55	72		100		7	7	55	118		358

TABLE A-24 (continued)
NONCONVENTIONAL POLLUTANTS DETECTED IN THE SCRUBBER WATER (mg/l)

Pollutant	COLORADO SUBBITUMINOUS							ALL SAMPLES						
	Intake	No. of Samples	No. of Detects	Min	Mean	Med	Max	Intake	No. of Samples	No. of Detects	Min	Mean	Med	Max
Ca		3	3	6830	29100		66900		8	8	6830	21400		66900
Mg		3	3	5130	16700		35100		8	8	5130	13000		35100
Na		3	3	33400	40400		51000		8	8	8500	25900		51000
Al		3	3	1530	4610		8420		8	8	1530	3930		8420
Mn		3	1		12				8	5	0.012	62		106
V		3	3	3	7		10		8	4	0.003	0.008		10
B		3	3	4480	17800		35500		8	8	630	7140		35500
Ba		3	0						8	5	114	263		400
Mo		3	0						8	1		36		
Sn		3	3	55	110		155		8	4	50	95		155
Y		3	0						8	0				
Co		3	0						8	0				
Fe		3	3	190	358		515		8	8	146	3730		8100
Ti		3	3	35	61		102		8	6	4	105		434

MORGANTOWN ENERGY TECHNOLOGY CENTER (METC) LOW-Btu GASIFICATION

SELECTION RATIONALE

The METC low-Btu gasification facility was selected for sampling for the following reasons:

- The METC low-Btu gasifier is a pilot unit; however, the gasificaiton process, gas cleanup, and the waste streams are representative of those to be used in future combined cycle applications;
- It is one of the few low-Btu gasification facilities which has a sulfur removal train; and
- It utilizes pressurized (200 psig) fixed bed gasification technology.

PROCESS DESCRIPTION

The low-Btu gasification facility at METC consists of an elevated pressure (200 psig), fixed-bed Wellman-Galusha gasifier operated with a mechanical stirrer. This pilot unit has been producing a desulfurized product gas (150 Btu/scf) using agglomerating high swelling bituminous coals. A flow diagram of the gas production and cleanup system is shown in Figure A-2. The gasifier is of 1967 vintage, while the full flow gas cleanup system is approximately one year old. The product gas if flared or combusted in an erosion/corrosion test facility.

Coal is transported from storage piles to silos via a vibrating feeder, conveyor belt, and bucket elevator. It is discharged from silos to overhead hoppers before routing to the gasifier. Coal passes from the coal hoppers to a screw type feeder which introduces the coal into the gasifier. Ash is collected wet from the bottom of the gasifier and conveyed from an ash hopper to drums for final disposal.

The product gas flows out the top of the gasifier into a cyclone to remove fines and particulates. The gas is cooled and tars are condensed and removed in the humidifier (spraytower). In addition, there are cyclones and a venturi scrubber just downstream of the humidifier for removing additional tar. There is an electrostatic precipitator downstream of the venturi scrubber, however, it has not been successfully operated to date. The direct cooler provides final cooling and condensing of any higher boiling point residual tars and oils.

METC has a Holmes-Stretford system for removing and recovering sulfur from the product gas stream. Residual hydrogen sulfide

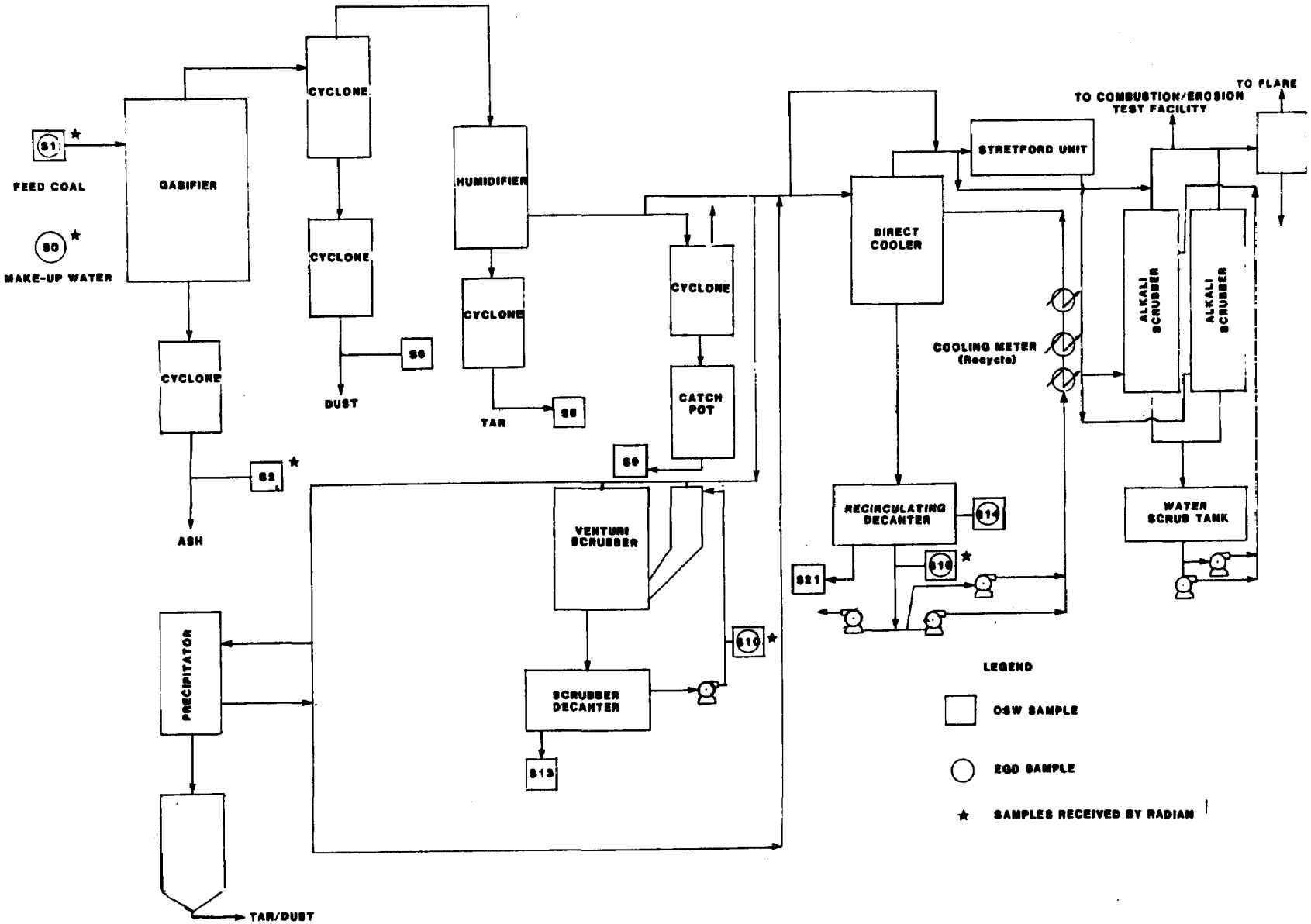

Figure A-2. Sample Locations and Numbering System
METC Gasification Facility Run 98

concentrations of less than 10 ppm in the product gas have been achieved; however, long-term stabilized operation has not been achieved. Prior to introducing the product gas into the combustor in the corrosion/erosion facility or to the flare, the gas flows through alkali scrubbers, a knock-out drum, and a muffler as final cleanup.

SAMPLING EPISODES

The sampling locations are indicated in Figure A-2 by numbered circles and squares. Sample points designated by numbered circles indicate samples were taken for the Effluent Guidelines Division under authority of the Clean Water Act. Sample points designated by numbered squares indicate samples taken for the Office of Solid Waste under the authority of the Resource Conversation and Recovey Act (RCRA). A list of all the sample points and the numbered samples which were planned to be taken each day is presented in Table A-25. METC personnel limited the sampling effort to sampling points listed below:

- Source water (SO)
- Feed Coal (S1)
- Gasifier Ash (S2)
- Venturi Scrubber (S10)
  Recycle Water (S36/S37)
- Direct Cooler
  Recyle Water

Because plant personnel advised the sampling crew that the gasifier would only be operated for 24 hours, the above schedule was modified.

In addition to the 24-hour composite samples of the aqueous streams (S-10 and S-37) for Day 1, additional grab samples of these streams would be collected at 4-hour intervals. This decision was based on the concern for obtaining samples during steady-state operation. The original intent was to sample the system at steady state; however, the quality of the water in the recirculating gas cooling and scrubbing system might not be in a steady-state condition at the beginning of the 24-hour compositing period (because of the shutdown). The additional grab samples would help to document changes in the quality of the recirculating water over the 24-hour period if steady state was not achieved.

The grab samples which were collected in addition to the four hour aliquots for the 24-hour composites and the regular four

TABLE A-25

SAMPLE POINTS AT THE METC GASIFICATION FACILITY

SOURCE	SAMPLE POINT
Source Water	S0
Feed Coal	S1
Gasifier Ash	S2
Cyclone Dust	S6
Humidifier Tar	S8
Cyclone Tar	S9
Venturi Scrubber Recycle Water	S10
Venturi Scrubber Tar	S13
Direct Cooler Recirculating Decanter Oil	S21
Decanter Oil	S34
Direct Cooler Recycle Water	S36 *

○ SOLID WASTE SAMPLES

□ WATER SAMPLES

* The sample point labeled S-36 on the flow diagram was changed to S-37 by METC. These two points are synonymous.

hour grab samples for volatile organics are listed in Table A-26. These samples were not included in the original sampling schedule outlined in the test plan. Additional grab samples were not collected at 5:00 a.m. in an effort to conserve glassware. Also, no additional grab samples were collected for dissolved metals, and additional grabs for total metals analysis were collected only at S-10 (venturi scrubber recycle liquor) and only at eight-hour intervals (5:00 p.m., 1:00 a.m., and 9:00 a.m.).

At the end of the first 24-hour sampling period, the gasifier was still running and a second 24-hour compositing period was initiated. At this time the gasifier was scheduled to run for 48 additional hours because personnel were being reassigned to work at the gasification area on the evening and night shifts. An inventory of glasswre indicated that there were enough bottles for two more 24-hour composites from each of the two process water sample points (S-10 and S-37), as well as the source water sample (S-0); however, it would not be possible to collect the duplicate sample of the direct cooler recyle liquor (S-37) which was originally planned during the second 24-hour compositing period for quality control purposes. The gasifier continued to run through Friday and three 24-hour composite samples were obtained from S-10 and S-37.

The source water sample was collected on Day 2 rather than Day 1 as originally planned. The collection of this sample on Day 2 rather than Day 1 should have no significant effect on the data. The source water which is used as makeup water was collected from a tap. EG&G personnel explained that this was not potable water but was part of a recirculating utility water system which includes the plant's cooling water with added corrosion inhibitors, and recycled water from a pond which receives intermittent discharges from the gasification area.

OPERATION DATA

Operating data was obtained periodically during the sampling visit in the form of graphic printouts from the facility's on-line computer systems. This data is summarized in Table A-27.

POLLUTANT DATA

The samples collected were analyzed as described in the sampling plan. A summary of the results of these analyses are given in Tables A-28 through A-37. Grab samples and composite sample analytical data are treated alike in the summary. Source problems are suspected in the 4AAP Phenol analyses.

TABLE A-26

MATRIX OF ADDITIONAL FOUR HOUR GRAB SAMPLES OF AQUEOUS STREAMS
COLLECTED FOR EGD AND OSW AT METC DURING FIRST 24 HOUR SAMPLING PERIOD

Date :	8/4/81		8/4/81		8/5/81		8/5/81		8/5/81	
Time :	5:00 pm		9:00 pm		1:00 am		5:00 am		9:00 am	
Sample Point:	S-10	S-27	S-10	S-37	S-10	S-37	S-10	S-37	S-10	S-37
SCC Number :	10273	10271	10274	10278	10275	10279			10276	10512
Extractable Organics	X	X	X	X	X	X			X	X
Pesticides	X	X	X	X	X	X			X	X
Group 1	X	X	X	X	X	X			X	X
Group 2	X	X	X	X	X	X			X	X
Phenolics	X	X	X	X	X	X			X	X
Cyanide	X	X	X	X	X	X			X	X
Oil & Grease	X	X	X	X	X	X			X	X
Sulfide	X	X	X	X	X	X			X	X
Total Metals	X				X				X	

TABLE A-27

PROCESS DATA COLLECTED AT THE METC LOW-Btu GASIFICATION FACILITY
4 August 1981 - 6 August 1981

Date:	8/4/81	8/4/81	8/5/81	8/5/81	8/5/81	8/5/81	8/5/81
Time	1848	2304	0049	1144	1149	2239	0137
Air Flow (SCFH)	48703	50341	48846	50017	48465	53695	50400
Steam Flow (#/1 hr)	808	806	808	818	813	745	746
Exit Gas Press. (PSIG)	125	123	125	126	125	123	124
Exit Gas Temp (^oF)	1099	1000	1029	1061	1042	1024	1076
Venturi Recycle Flow (GPM)	5.0	4.9	4.8	4.9	5.0	5.0	4.9
Venturi Recycle Temp (^oF)	257	252	250	255	250	249	252
Venturi Recycle Press. (PSIG)	99	100	100	101	100	99	101
Direct Cooler Flow (GPM)	133	137	133	135	131	140	137
Direct Cooler Temp (^oF)	110	106	104	109	109	98	96
Direct Cooler Press. (PSIG)	100	100	101	100	100	99	100
Gas Composition							
H_2 %	17.7	17.6	17.3	17.5	17.5	17.7	16.7
CO %	21.9	22.5	22.9	23.0	21.5	22.2	20.9
CO_2 %	9.1	7.5	8.1	8.2	8.0	7.8	8.4
N_2 %	46.0	46.1	45.7	45.5	47.0	46.4	48.7
Heating Value (BTU)	156	162	161	163	158	163	151

Table A-28

Priority Organic Pollutants Detected in the Direct Cooler Recycle (μg/l)

	No. of Samples	No. of Detects	Min	Mean	Median	Max
Acenaphthene	7	7	157	817		2580
Benzene	7	3*	2130	2430		2780
2,4-Dimethylphenol	7	5	584	2837		7670
Ethylbenzene	7	3*	65	67		70
Fluoranthene	7	1		469		
Methylene chloride	7	1		13		
Naphthalene	7	6	15000	36000		82400
Phenol	7	7	25500	70300		133000
Bis(2-ethylhexyl)phthalate	7	1		91		
Di-n-butyl phthalate	7	1		52		
Acenaphthalene	7	3	127	325		465
Anthracene	7	6	253	1020		2830
Fluorene	7	7	891	3730		11200
Phenanthrene	7	7	891	3580		10300
Pyrene	7	2	110			176
Toluene	7	3*	1150	1270		1350

Table A-29

Nonconventional Organic Pollutants Detected in the Direct Cooler Recycle (μg/l)

	No. of Samples	No. of Detects	Min	Mean	Median	Max
Methyl ethyl ketone	7	3*	54	97		183
Acetone	7	3*	1340	2100		3430
Hexanoic Acid	7	3	2210	2470		2650
Dibenzofuran	7	7	2220	6710		16600
n-Dodecane	7	4	914	2070		3210
Dibenzo thiophene	7	1		309		
Biphenyl	7	7	111	640		2090

Table A-30

Priority Organic Pollutants Detected in the Venturi Scrubber Recycle (µg/l)

	No. of Samples	No. of Detects	Min	Mean	Median	Max
Acenaphthene	7	1		130		
2,4-Dimethylphenol	7	5	139	3000		12000
Naphthalene	7	3	99	247		324
N-nitrosodiphenylamine	7	1	150			
Pentachlorophenol	7	1	857			
Phenol	7	7	18900	79300		302000
Bis(2-ethylhexyl)phthalate	7	1		127		
Benzo(1)anthracene	7	3	65	75		90
Acenaphthalene	7	3	2190	2550		2820
Chrysene	7	2	12			25
Fluorene	7	1		220		
Phenanthrene	7	1		771		

Table A-31

Nonconventional Organic Pollutants Detected in the Venturi Scrubber Recycle (µg/l)

	No. of Samples	No. of Detects	Min	Mean	Median	Max
Methyl ethyl ketone	7	2	41			392
Acetone	7	2	166			2330
Benzoic Acid	7	7	7590	21300		32500
Hexanoic Acid	7	7	10200	12000		14600

Table A-32

Priority Metals Detected in the Venturi Scrubber Recycle (µg/l)

	No. of Samples	No. of Detects	Min	Mean	Median	Max	Intake Water
Sb	6	6	40	76		142	
As	6	6	1800	2390		3320	
Be	6	6	11	12		14	<0.002
Cr	6	6	33	48		91	<0.008
Cd	6	6	16	20	21	21	<0.010
Cu	6	6	46	59		71	0.021
Pb	6	0					<0.04
Hg	6	6	8	12		18	<0.004
Ni	6	6	284	362		391	0.014
Se	6	6	487	10900		51900	<0.004
Ag	6	0					<0.005
Th	6	6	76	96		115	<0.063
Zn	6	6	90	1510		6600	0.027

Table A-33

Priority Metals Detected in the Direct Cooler Recycle (µg/l)

	No. of Samples	No. of Detects	Min	Mean	Median	Max	Intake Water
Sb	3	3	8	9		12	<0.004
As	3	3	117	206		291	<0.003
Be	3	0					<0.002
Cr	3	3	11	18		40	<0.008
Cd	3	0					<0.010
Cu	3	3	12	24		35	0.021
Pb	3	0					<0.04
Hg	3	3	11	17		21	<0.004
Ni	3	3	7	33		50	0.014
Se	3	3	810	1290		1540	<0.004
Ag	3	0					<0.005
Th	3	2	65			73	<0.063
Zn	3	3	112	140		193	0.027

Table A-34

Conventional Pollutants Detected in the Venturi Scrubber Recycle (mg/l)

	No. of Samples	No. of Detects	Min	Mean	Median	Max	Intake Water
pH	7	7	7.55	8.13		8.9	7.99
BOD5	7	7	<2000	<2000		<2000	<1
Oil and Grease	6	6	155	271		398	<0.002
TSS	7	7	11.6	752		5060	<0.008

Table A-35

Conventional Pollutants Detected in the Direct Cooler Recycle (mg/l)

	No. of Samples	No. of Detects	Min	Mean	Median	Max	Intake Water
pH	7	7	8.53	8.65		8.71	7.99
BOD5	7	7	340			<2000	<1
Oil and Grease	6	6	549	841		1200	3.69
TSS	7	7	18.8	46.7		77.3	6

Table A-36

NONCONVENTIONAL POLLUTANTS DETECTED IN THE VENTURI SCRUBBER RECYCLE (mg/l)

Pollutant	No. of Samples	No. of Detects	Min	Mean	Med	Max	Intake
Acidity	5	5	1590	5270		10200	<1
Alkalinity	7	7	5310	7820		9480	41
HCO3	7	7	5310	7820		9480	41
CO3	0						
TOC	7	7	15500	17800		22600	<5
COD	7	7	19800	71100		88000	3.5
Phenolics	7	7	0.77	1630		6330	<0.005
Br	3	1		1.16			0.18
Cl	7	7	18000	20000		24000	16.4
F	7	7	379	2190		3000	1.3
Total Solids	6	6	59600	68500		82300	196
Total Volatile Solids	5	5	50500	62000		72800	15.3
Total Volatile Susp. Solids	6	6	11.2	31.4		60	<0.5
Total Dissolved Solids	6	6	58300	66400		81700	188
CN-	7	7					0.56
SCN	6	6	2360	2610		3340	<1
CN /Cl2	6	6	304	344		412	0.37
Kjeldahl Nitrogen	7	7	2080	10700		15800	229
NH3	6	6	8840	10900		13700	152
NO3	6	6	29	166		357	<1
NO2	7	0					<0.01
PO4	7	7	0.17	2.08		9.1	0.45
SO4	1	1		1420			44
SO3	7	7	110	270		361	<0.5
S=	7	7	3	13.5		27	1.9
Total Organic Nitrogen	7	7	50	1230		2200	77
Ca	6	6	2.22	3.24		4.22	25.5
Mg	6	6	0.89	1.31		1.64	4.94
Na	6	6	13.6	47.8		73.3	15.5
Al	6	6	25.8	29.8		36.1	0.315
Mn	6	6	0.58	1.47		2.59	0.013
V	6	6	0.08	0.13		0.21	<0.01
B	6	6	270	321		374	1.1
Ba	6	6	0.18	0.20		0.22	0.035
Mo	6	0					<0.015
Su	6	3	1.49	1.55		1.63	<0.020
Y	6	1		0.01			<0.010
Co	6	6	0.06	0.07		0.08	<0.009
Fe	6	6	154	202		230	0.407
Te	6	6	0.39	0.43		0.52	<0.005

Table A-37

Nonconventional Pollutants Detected in the Direct Cooler Recycle (mg/l)

Pollutants	No. of Samples	No. of Detects	Min	Mean	Median	Max	Intake Water
Acidity	7	0					<1
Alkalinity	7	7	31200	33800		37500	
HCO_3	7	7	27500	28900		32000	
CO_3	7	7	2580	4990		7460	
TOC	7	7	5590	6190		6720	<5
COD	6	6	19700	31500		69100	3.5
Phenolics	7	7	0.99	713		4420	<0.005
Br	6	1		0.46			0.18
Cl	6	6	250	362		575	16.4
F	7	7	7.8	19.0		33	1.3
Total Solids	7	7	1120	1590		1960	19.6
Total Volatile Solids	6	6	1180	1490		1800	15.3
Total Volatile Suspended Solids	7	7	13.6	31.4		56	<0.5
Total Dissolved Solids	7	7	578	1000		1530	188
CN	6	6	112	200		269	0.56
SCN	6	6	240	405		500	<1
CN/Cl_2	6	6	24	357		1130	0.37
Kjeldahl Nitrogen	7	7	7590	9770		13100	229
NH_3	7	7	3200	7810		11600	152
NO_3	6	5	53.3	65.8		87.3	<1
NO_2	7	2	0.59			0.78	<0.01
PO_4	7	6	.051	0.301		0.948	0.45
SO_4	7	7	49	539		865	44
SO_3	7	7	111	172		220	<0.5
S	7	7	98	144		295	1.9
Total Organic Nitrogen	7	7	100	1960		5600	77
Ca	3	3	2.23	3.40		4.1	25.5
Mg	3	3	0.175	0.377		0.609	4.94
Na	3	3	1.51	2.32		3.20	15.5
Al	3	3	0.261	0.308		0.377	0.315
Mn	3	3	0.086	0.133		0.218	0.013
V	3	0					<0.01
B	3	3	4.63	5.78		7.77	1.1
Ba	3	3	0.046	0.076		0.117	0.035
Mo	3	0					<0.015
Sn	3	0					<0.020
Y	3	0					<0.010
Co	3	1		0.01			<0.009
Fe	3	3	13.5	20.7		33.3	0.407
Ti	3	1		0.04			<0.005

GENERAL ELECTRIC CORPORATE RESEARCH AND DEVELOPMENT CENTER

SELECTION RATIONALE

The GE low-Btu gasification facility was selected for sampling for the following reasons:

- While the GE system is a pilot unit, the gasification process, gas cleanup and resultant condensates and waste streams are representative of those expected in future commercial combined cycle applications; and
- The gas cleanup train is extensive and provides an opportunity to evaluate potential solid and aqueous wastes from several stages of gas cleanup.

PROCESS DESCRIPTION

Figure A-3 is a schematic diagram of the Gasifier and Gas Cleanup System. The GE gasifier is a pressurized fixed bed refractory lined gasifier which produces a low-Btu gas of 150 to 180 Btu/scf. The gasifier typically runs at a pressure of approximately 300 psig. The present feedstock to the gasifier is Illinois #6 coal with an average sulfur content of two percent. The coal is sized (1/4 inch to 2 inches) and delivered to the site by truck. Coal is fed to the top of the gasifier at a rate of 24 tons per day by an auger feeder and steam and air are injected into the bottom of the gasifier. Ash is discharged from the bottom of the gasifier through an ash lock hopper.

The hot raw gas exits the top of the gasifier at 1,100^{0}F and enters a water quench where tars and particulates are knocked out and the gas is cooled to 330^{0}F. The quench liquor then passes through a cartridge filter and is recycled back to the quenching operation. The solids which are retained in the filter are removed through a sludge lock and discharged to a drum. These solids consist primarily of condensed organics and coal fines. The gas is then scrubbed in a venturi scrubber to remove particulates and tars carried over from the quench step. The scrubber liquor flows to a separator from which tars are manually removed. The decanted scrubber liquor flows to an underground tank and is eventually used as makeup to the initial gas quenching step.

The cleaned gas passes through two shell and tube heat exchangers in series labeled E_1 and E_2 where the gas is cooled to 180°F. The condensate stream from E_1 flows to a separator labeled V_2 where tar is separated from the water and light oil phases. The combined condensate and low-Btu gas stream exiting

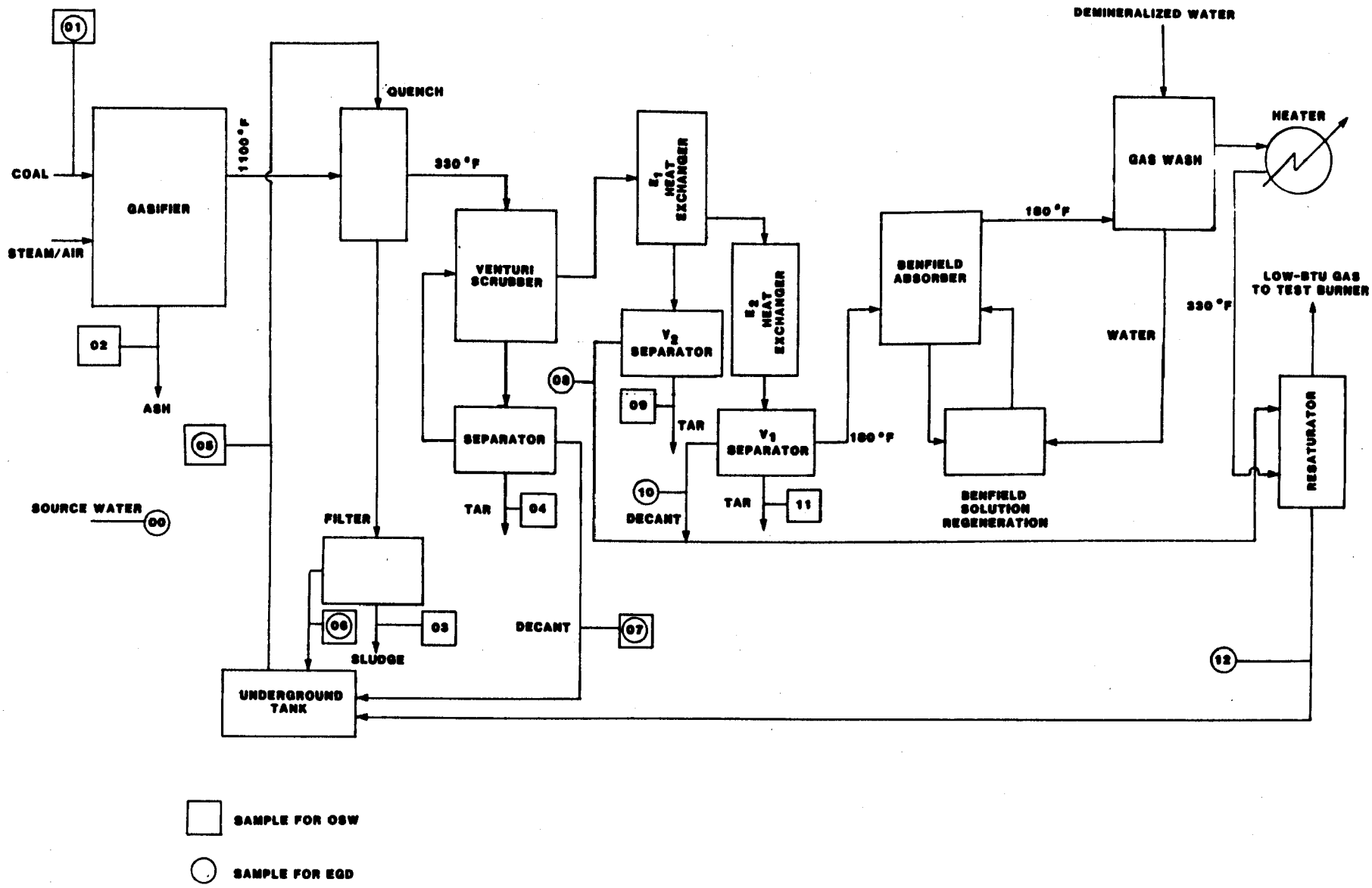

Figure A-3. Schematic Diagram of General Electric Low-Btu Gasification and Gas Cleanup Train Showing Proposed Sample Locations

E_2 enter a separator labeled V_1 where the gas, tar, and water and light oil phases are separated. Both of the separators (V_2 and V_1) are equipped with a tar boot from which tar is periodically withdrawn.

The cooled gas exiting the V_1 separator is scrubbed with a potassium carbonate solution in a Benfield H_2S absorber. The gas is then washed with demineralized water to remove any alkali metals which might be present in the gas and cause corrosion problems in a gas turbine. The demineralized water from the gas washer is used as makeup water to the Benfield solution regeneration process. The low-Btu gas which exists the washer is reheated and saturated with water and light hydrocarbons (decanted water and light oils from separators V_1 and V_2) in a resaturator. The liquor from the resaturator is routed to an underground tank and eventually used as makeup water to the initial quenching operation. The final saturated low-Btu gas is then combusted in the test burner.

SAMPLING EPISODES

Table A-38 lists all of the sample points selected for either water or solid waste sampling. Samples were collected at sample points 00 through 05, however, the operator and DOE did not grant permission to sample the other points. At the time of sampling, the quench liquor sample which was planned to be collected at sample point 05 was changed to the quench liquor filtrate at sample point 06. The quench liquor filtrate is a more representative sample because it is collected directly downstream of the intiial gas quench step.

Also, the sampling episode for the GE facility was restricted for GE only one 24-hour compositing period rather than the three which had been planned.

The 24-hour sampling period began at 2:00 a.m., 21 October 1981. Time composites were collected of the quench liquor (sample point 06) and quench liquor duplicate, gasifier ash (sample point 02), and quench blowdown sludge (sample point 03) and quench blowdown sludge duplicate. Aliquots for these composites were collected at four-hour intervals at the following times on 21 October 1981:

2:00 a.m.
6:00 a.m.
10:00 a.m.
2:00 p.m.
6:00 p.m.
10:00 p.m.

Grab samples for volatile organics were also collected at these times. Grab samples of the source water, feed coal, and

Table A-38

Sample Points and Rationale for Selection for Aqueous and Solid Stream Characterization at General Electric

Sample Point Number	Sample Point Description	Rationale for Selection
00	Makeup Water	The source water was chosen for sampling to provide background characteristics for comparison with data from other streams.
01	Feed Coal	The feed coal was chosen to provide background charactertics for comparison with data from other streams.
02	Gasifier Ash	This source was selected because it is representative of the ash that would be disposed of from a commercial facility.
03	Quench Blowdown Sludge	This stream was selected because it represents a solid waste stream which would require disposal at a commercial low-Btu facility.
04	By-Product Tar	This stream was selected because it is believed to be representative of tar streams which would be found at a commercial facility. It also represents a stream which may be stored on-site prior to combustion which may require combustion which may require compliance with certain Office of Solid Waste regulations depending on the chemical nature of the material.
05	Quench Liquor Recycle	This stream was selected for sampling because it represents the sole wastewater discharge to treatment and is representative of wastewater discharges which would be expected from commercial low-Btu gasification facilities.

Table A-38 (continued)

Sample Points and Rationale for Selection for Aqueous and Solid stream Characterization at General Electric

Sample Point Number	Sample Point Description	Rationale for Selection
06	Quench Liquor Filtrate	The remaining streams were selected in ordr to determine the origin and fate of pollutants in the gasification and gas cleanup train. In a generic sense, it is also possible that certain of these streams could be representative of effluent streams from a commercial facility.
07	Scrubber Liquor Decant	
08	E_1 Heat Exchanger Condensate Liqupr	
09	E_1 Heat Exchanger Condensate Tar	
10	E_2 Heat Exchanger Condensate Liquor	
11	E_2 Heat Exchanger Condensate Tar	
12	Saturator Liquor	

○ - Samples for EPA/EGD

□ - Samples for EPA/OSW

by-product tar were also collected on 21 October 1981. Table A-39 lists the samples collected for EPA/EGD along with the corresponding Sample Control Center identification numbers. Table A-40 lists the samples collected for EPA/OSW.

The by-product tar (sample point (04)) samples was originally planned to be a time composite with aliquots collected every four hours. The GE personnel indicated, however, that they would rather collect this sample all at once sometime near the end of the 24-hour sampling period because the tar needed to be heated before it could be pumped from the tank where it accumulated.

At the time of sampling, the sample crew was informed that the system would be operated at set points which were unique to any operating conditions utilized to date. These unique set points were (1) a steam/air ratio of approximatly 0.6 and (2) a coal throughput of approximately 1,800 pounds per hour. The sample crew was informed that the normal operation parameters which would demonstrate potentially more commercial representation of the GE process are (1) steam/air of 0.2 and (2) coal throughput of 2,000 pounds per hour. The effect that this change may have resulted in was a potentially more dilute water sample in regard to the pollutant species of interest.

OPERATING DATA

Operating data was obtained periodically during the sampling visit in the form of printouts from the facility's on-line computer system. This data is presented in Table A-41.

POLLUTANT DATA

The samples collected were analyzed as described in Appendix B. The results of these analyses are presented in Tables A-42 through A-45. No statistical evaluations were performed on the GE data because of the single sampling episode.

Table A-39

EPA/EGD SAMPLE MATRIX
GENERAL ELECTRIC LOW-BTU GASIFICATION FACILITY

Parmeter	SP 00 Source Water	SP 05 Quench Recycle Liquor	SP 05 Quench Recycle Liquor Duplicate
C1-Base/Neutral, Acid	10646	10648	10648
C2-Pesticides	10646	10648	10648
M1-Metals (AA)			
Total	10646	10648	10648
Dissolved	10647	10649	10649
M2-Metals (ICAP)			
Total	10646	10648	10648
Dissolved	10647	10649	10649
I - Group I Water Quality Parameters	10646	10648	10648
II - Group II Water Quality Parameters	10646	10648	10648
V1-V4 - VOA Preserved	10646	10648	10648
V1R-V4R - VOA Unpreserved Replicates	10646	10648	10648
VB - VOA Trip Blank	10646	10648	10648
P-PH - Phenolics	10646	10648	10648
O/G - Oil and Grease	10646	10648	10648
SS - Sulfide	10646	10648	10648
CN - Cyanide/Thiocyanate	10646	10648	10648
Residual Waste Sample		SP 01 Feed Coal	
EPA/EGD Residual Waste Analyses		S0623 S0623	

Table A-40

EPA/OSW SAMPLE MATRIX
GENERAL ELECTRIC LOW-BTU GASIFICATION FACILITY

Sample Point		Sample Identification Number	
		Main Sample	Duplicate Sample
01	Feed Coal	01	
02	Gasifier Ash	02	
03	Quench Blowdown Sludge	03	03D
04	By-Product Tar	04	04D
05	Quench Recycle Liquor	05	

Table A-41

PROCESS DATA COLLECTED AT GENERAL ELECTRIC
LOW-BTU GASIFICATION FACILITY
21 OCTOBER 1981

Time	Process Data		
12:38 am	Air Flow	(PPS)	1.228
	Steam Flow	(PPS)	.71333
	Blast Temp.	(°F)	374.26
	Vessel Pres.	(PSI)	287.67
	Hot Gas Temp.	(°F)	1196.9
	QU Exit Temp.	(°F)	365.63
	Bed Level	(FT)	10.409
2:40 am	Air Flow	(PPS)	1.2243
	Steam Flow	(PPS)	.66662
	Blast Temp.	(°F)	374.39
	Vessel Pres.	(PSI)	298.93
	Hot Gas Temp.	(°F)	1205.8
	QU Exit Temp.	(°F)	363.15
	Bed Level	(FT)	10.021
6:07 am	Air Flow	(PPS)	1.2121
	Steam Flow	(PPS)	.72638
	Blast Temp.	(°F)	375.14
	Vessle Pres.	(PSI)	298.03
	Hot Gas Temp.	(°F)	1162.7
	QU Exit Temp.	(°F)	362.84
	Bed Level	(FT)	10.017
2:29 pm	Air Flow	(PPS)	1.2028
	Steam Flow	(PPS)	.74602
	Blast Temp.	(°F)	377.22
	Vessel Pres.	(PSI)	301.12
	Hot Gas Temp.	(°F)	1174.2
	QU Exit Temp.	(°F)	373.51
	Bed Level	(FT)	10.619
6:23 pm	Air Flow	(PPS)	1.2173
	Steam Flow	(PPS)	.7119
	Blast Temp.	(°F)	376.87
	Vessel Pres.	(PSI)	306.69
	Hot Gas Temp.	(°F)	1176.5
	QU Exit Temp.	(°F)	367.26
	Bed Level	(FT)	10.663

Table A- 41 (Continued)

PROCESS DATA COLLECTED AT GENERAL ELECTRIC
LOW-BTU GASIFICATION FACILITY
21 OCTOBER 1981

Time	Process Data		
10:07 pm	Air Flow	(PPS)	1.2736
	Steam Flow	(PPS)	.72563
	Blast Temp.	(°F)	375.32
	Vessel Pres.	(PSI)	302.91
	Hot Gas Temp.	(°F)	1207.1
	QU Exit Temp.	(°F)	365.01
	Bed Level	(FT)	10.465

Table A-42

PRIORITY ORGANIC POLLUTANTS
DETECTED IN THE QUENCH LIQUOR FILTRATE

Pollutant	ug/l
Acenaphthene	24
2,4 - Dimenthyl Phenol	4850
Fluoranthene	248
Naphthalene	514
Phenol	335000
Di-n-butyl phthlate	69
Benzo(a) anthracene	43
Chrysene	15
Acenaphthalene	131
Anthracene	123
Fluorene	117
Phenanthrene	329
Pyrene	159

No organics found in intake water

Table A-43

PRIORITY METALS DETECTED
IN THE QUENCH LIQUOR FILTRATE (ug/l)

	No. of Samples	No. of Detects	Mean	Intake Water
Sb	1	1	200	800
As	1	1	2200	<100
Be	1	1	10	<10
Cr	1	1	2250	<10
Cd	1	1	100	100
Cu	1	1	10	960
Pb	1	1	<200	<50
Hg	1	1	0.1	<0.1
Ni	1	1	30	<30
Se	1	1	100	<100
Ag	1	1	12	4
Tl	1	1	200	100
Zn	1	1	25	15

Table A-44

CONVENTIONAL POLLUTANTS DETECTED IN THE QUENCH LIQUOR FILTRATE (mg/l)

	Intake Water	Quench Liquor Filtrate	
		(Duplicate)	
pH	7.8	9.4	9.2
BOD_5	<1	>2000	>2000
Oil and Grease	4	142	148
TSS	<1	389	445

TABLE A-45

NONCONVENTIONAL POLLUTANTS DETECTED IN THE QUENCH LIQUOR FILTRATE (mg/l)

	Intake Water	Quench Liquor Filtrate	(Duplicate)
Acidity	<1	<1	<1
Alkalinity	154	12280	11500
HCO_3	154	6430	6390
CO_3	<1	5840	5110
TOC	<1	5880	6120
COD	21	28200	21800
Phenolics	<0.005	19.3	25.5
Cl	14.2	6440	6130
F	2.3	430	195
Total Solids	276	48612	47930
Total Volatile Solids	65	6906	6531
Total Volatile Suspended Solids	<1	271	298
Total Dissolved Solids	282	46173	45680
CN	<0.02	434	380
SCN	<1	404	485
CN/Cl_2	<0.02	424	424
Kjeldahl Nitrogen	<1	587	555
NH_3	<1	383	422
NO_3	0.3		
NO_2	0.02		
PO_4	0.02	<0.05	0.4
SO_4	30		
SO_3	<2	300	350
S	2	135	132

HOLSTON ARMY AMMUNITION PLANT

SELECTION RATIONALE

The Holston facility was selected because it represents one of the three commercially operating facilities that practice gas quenching for product gas cleanup. It also generates by-products and solid waste streams that are typical of current and projected fixed bed gasifiers. Finally, it is the only U.S. facility that employs Wilputte gasification technology.

PROCESS DESCRIPTION

A schematic diagram of the Holston gasification facility is presented in Figure A-4. The various samples which will be taken during the visit are listed in Table A-46. Results from the samples collected under this program will fulfill the data base requirements for both the Office of Solid Waste and the Effluent Guidelines Division. As indicated in Figure A-4 and Table A-46, some of the samples were collected for analysis by both offices (denoted by a circle within a square). This is in keeping with the different objectives of the Clean Water Act and the Resource Conservation and Recovery Act.

The gas producers are single-stage, atmospheric, fixed-bed, air-blown Chapman gasifiers. The coal feedstock enters the top of each gasifier through a rotating feeder and is spread across the bed by a distribution arm. Steam and air are introduced into the bottom of the gasifier and pass through a grate which distributes these gases evenly and also supports the coal bed. Ash from the gasifier is collected in a water-sealed ash pan and removed from the unit using an ash plow. The ash plowed from the pan falls into a hopper and then into a drag chain trough. The ash is conveyed to a storage silo and is hauled from the site daily by truck. The hot raw gas exits the top of the gasifier at 1,050 to 1,250°F and enters a cyclone.

Particulate matter is removed from the hot, raw, low-Btu gas in refractory-lined cyclones that operate at a temperature slightly lower than the gasifier overhead temperature. Each gasifier at the Holston facility is equipped with a cyclone. The particulates removed by the cyclones consist of devolatilized coal dust, ash, and tar entrained in the raw gas. The particulates collect at the bottom of the cyclones. The dust is emptied once per shift into the same hopper used for the gasifier ash.

The hot gas leaving the cyclones is quenched by spraying water into the exit lines from each cyclone. Excess quench water is collected in a pitch trap (one trap for each gasifier/cyclone). Pitch (a lighter-than-water, tarry material) and agglomerated

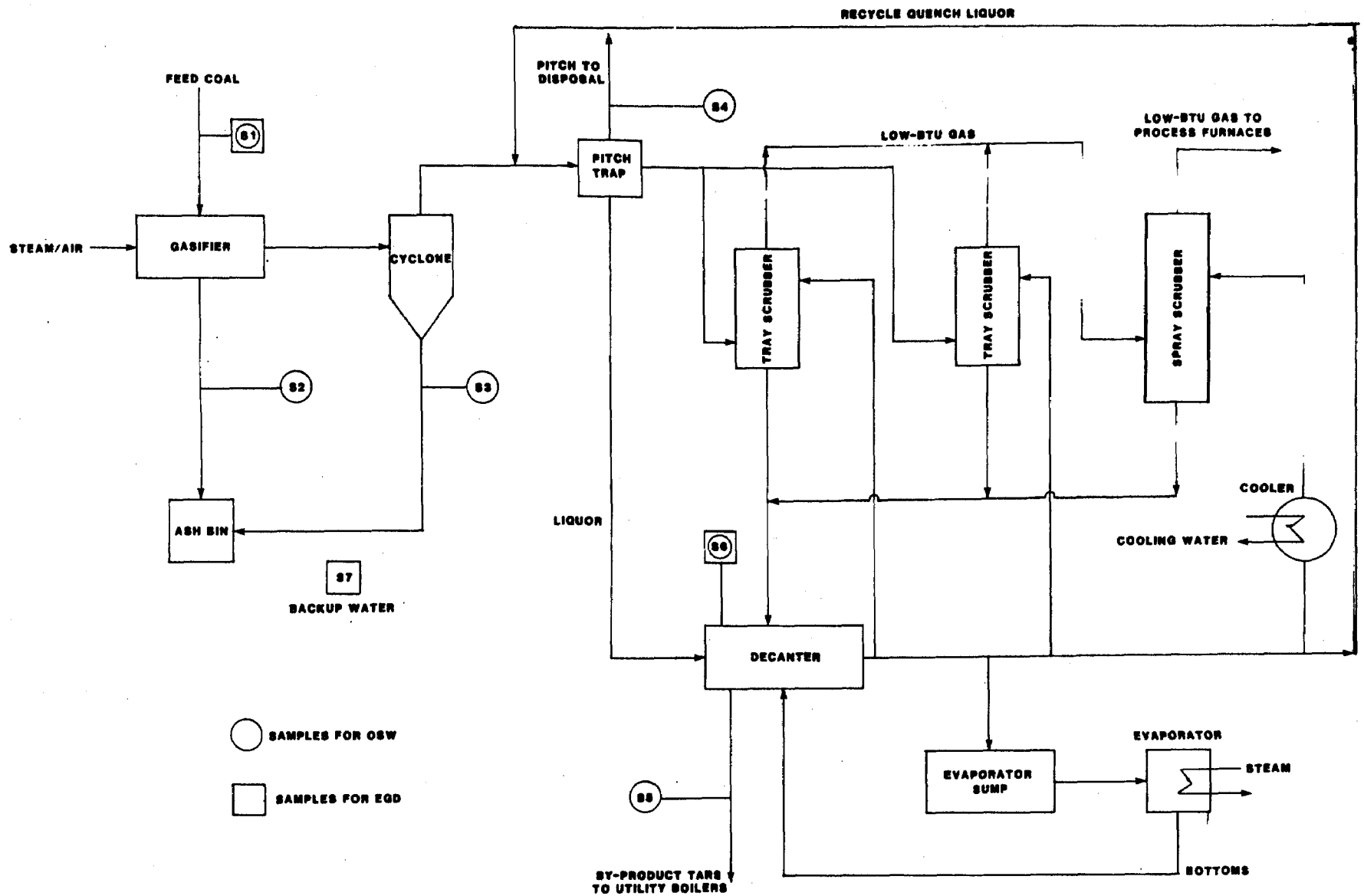

Figure A-4. Process Flow Diagram of the Holston Gasification Facility Showing Sample Points

Table A-46

Sample Points at Holston Low-Btu Gasification Facility

Slurry Solids

Source	Sample Point
Gasifier Ash	S2
Cyclone Dust	S3
By-Product Pitch	S4
By-Product Tars	S5

Water

Decanter Recycle Liquor	S6

Coal Feed and Makeup Water

A sample of the coal feed S1 and of makeup water S7 to the Holston gasification system were obtained.

particulates which accumulate in the pitch traps are collected for periodic off-site disposal. After the initial quenching step, the gas is cooled further with water in two primary tray scrubbers which are operated in parallel. Here, most of the tars and particulates are scrubbed from the gas as it is cooled to approximately 135°F.

The gases exiting the tray scrubbers are recombined and compressed before entering a spray scrubber. In the spray scrubber, residual tars and particulates are removed as the gas is further cooled to about 120°F. The effluent scrubbing liquor from both the spray and tray scrubbers is sent to the decanter.

The decanter at Holston is a large concrete tank (16 x 40 x 6 feet). Process condensate from the pitch trap and the condensed tars from the quenching/scrubbing steps enter at one end of the tank. A series of baffles minimizes the turbulence caused by the incoming liquor. The tars settle to the bottom of the decanter and are removed periodically for use as an auxilliary fuel in a coal-fired boiler. A portion of the water from the liquor separator is cooled in a set of heat exchangers before being reused in the spray scrubber. The remainder of the water is recirculated to the other quenching and scrubbing steps. Excess quench liquor which accumulates in the decanter is periodically sent to an evaporator for disposal.

SAMPLING EPISODES

The HAAP was sampled on two occasions. The first was a 1-day sampling episode which occurred on 25 March 1981 and was combined with an engineering visit to gather information for costing and to explore the site as a potential site for a treatability study. The second sampling visit was conducted between 29 June and 2 July 1981; it was a 3-day effort with wastewater samples taken on each day.

The streams sampled at Holston include the following: (the numbers in parenthesis refer to Figure A-4).

<u>Process Water</u>

- o Decanter recycle liquor (S6)

<u>Solid Waste</u>

- o Cyclone dust (S3)
- o Gasifier ash (S2)

By-Product Streams

- o Pitch from pitch trap (S4)
- o Tars from liquor separator underflow (S5)

Other

- o Feed coal (S1)
- o Source intake water (S7)

On the 25 March visit all samples taken were instantaneous grab samples. The feed coal, make-up water and by-product pitch were not sampled on this visit.

On the second visit the recycle decanter liquor was manually composited by collecting samples every six hours for a 24-hour period. The final grab sample for the previous days composite was taken simultaneously with the first grab for the next 24-hour composite. This procedure resulted in five six-hour grab samples going into each composite. Duplicate samples were taken of the cyclone dust, the by-product pitch, the by-product tar and the decanter recycle liquor.

OPERATIONAL DATA

Operating data at HAAP is sparse due to the lack of instrumentation. The operating data available are presented in Table A-47.

POLLUTANT DATA

The samples collected during these two sampling episodes were analyzed as described in Appendix B. A summary of the results of these analyses are given in Tables A-48 through A-52. Each sampling episode is listed separately even though operating conditions at the facility were essentially the same during both visits. The sampling procedures were different as noted above. The duplicate samples results were averaged and treated as a single data entry. The HAAP Phenolics data is suspect.

Table A-47

Operating Data Collected at Holston Army Ammunition Plant

Parameter	Value
Coal Feed rate (each gasifier)	11 tons/day
Pressures	
-No. 2 raw gas	0.2" H_2O
-No. 3 raw gas	0.2" H_2O
-No. 2 steam inlet	6" H_2O
-No. 3 steam inlet	5.4" H_2O
-No. 1A scrubber outlet	1.2" H_2O
-No. 1B scrubber outlet	0.6" H_2O
-No. 1C scrubber outlet	2.2" H_2O
-No. 1 collector main	1.6" H_2O
Temperatures	
-No. 2 raw gas	1,200°F
-No. 3 raw gas	1,200°F
-No. 2 steam inlet	145°F
-No. 3 steam inlet	145°F
-No. 1A scrubber outlet	141°F
-No. 1B scrubber outlet	145°F
-No. 1C scrubber outlet	122°F
-No. 1 collector main	159°F

NOTES: No. 2 = Number 2 gasifier
No. 3 = Number 3 gasifier
No. 1A = First of two parallel tray scrubbers
No. 1B = Second of two parallel tray scrubbers
No. 1C = Spray scrubber

Table A-48

Priority Organic Pollutants Detected in the Decanter Recycle Liquor (ug/l)
29 June - 2 July Sample

Pollutant	Intake Water	25 March Sample	No. of Samples	No. of Defects	Min	Mean	Median	Max
Acemaphthene			3	2	6			84
Acrylonitrite			3	1		16		
Benzene		1050	3	1		314		
Carbon-Tetrachloride		<1	3	1		82		
Chlorobenzene		36	3	1		282		
1,2,4-Trichlorobenzene			3	1		746		
Hexachlorobenzene			3	1		232		
1,2-Dichloroethane		5	3	0				
1,1,1-Trichloroethane		<1	3	0				
1,1,2-Trichloroethane		<1	3	0				
1,1,2,2-Tetrachloroethane		30	3	0				
Chloroethane			3	1		23100		
2-Chloroethylvinyl ether			3	1		4810		
Chloroform		180	3	0				
1,1-Dichloroethylene		<1	3	1		134		
1,2-trans-Dichloroethylene			3	1		9320		
1,3-Dichloropropylene			3	1		7380		
2,4-Demethylphenol			3	3	32	147		250
2,6-Denitrotoluene			3	0				
1,2-Diphenylhydrazine			3	1		208		
Ethylbenzene		136	3	1		224		
Fluoranthene		3490	3	3	26	195		416
4-Bromophenylphenyl ether			3	1		201		
Bis(2-chloroethoxy)methane			3	1		211		
Methylene chloride		1050	3	3	16	26		42
Methyl chloride			3	1		900		
Methyl bromide			3	1		29200		
Bromoform		120						
Dichlorobromomethane			3	1		11300		
Trichlorofluoromethane			3	1		14500		
Chlorodibromomethane			3	1		7020		
Naphthalene		36300	3	1	513	2050		3940
-Nitrosophenylamine			3	3	62	234		504
Phenol		73200	3	3	6300	32000		90,000
?tylbenzyl phthalate		12200	3	2	27			43
?-n-Butyl phthlate			3	2	5			44
?-n-Octyl phthalate			3	3	509	850		1170
?ethyl phthalate			3	2	150			205
?anzo(a)anthracene		88000	3	3	13	45		94
??uzo(a)pyrene			3	2	5			14
Chrysene		86600	3	3	9	40		99
Acenaphthalene			3	1		124		
Anthracene			3	3	14	157		394
Fluorene			3	3	32	367		936
Phenanthrene			3	3	28	324		824

Table A-48 (Continued)

Priority Organic Pollutants Detected in the Decanter Recycle Liquor (ug/l)
29 June - 2 July Sample

Pollutant	Intake Water	25 March Sample	No. of Samples	No. of Defects	Min	Mean	Median	Max
Pyrene		9540	3	3	17	96		259
Tetrachloroethylene			3	1		6560		
Toluene		<1	3	1		135		
Trichloroethylene			3	1		121		
Vinyl chloride			3	1		16700		
Hexachloroethane			3	1		202		
?chloronaphthalene			3	1		216		
3-Dichlorobenzene			3	1		154		
?-Dinitrotoluene			3	1		124		

Table A-49

Non-Conventional Organic Pollutants
Detected in the Decanter Recycle Lignor (μg/l)
29 June - 2 July Samples

Pollutant	Intake Water	25 Mar. Sample	No. of Samples	No. of Detects	Min	Mean	Median	Max
Methylethyl ketone		ND	3	2	222			5860
Acetone		ND	3	3	2340	4425		10300
Diethylether		ND	3	1		10900		
Benzoic Acid		ND	3	1		8800		
Dibensofuran		ND	3	2	30			385
-Terpinol		ND	3	1		26		
Biphenyl		ND	3	2	30			60

Table A-50

Priority Metals Detected in the Decanter Recycle Lignor (μg/l)
29 June - 2 July Samples

Pollutant	Intake Water	25 Mar. Sample	No. of Samples	No. of Detects	Min	Mean	Median	Max
Sb	<4	1100	3	3	57	68		80
As	<3	35500	3	3	1350	2150		2550
Be	<2	<1.0	3	3	11	12		13
Cr	<10	<40	3	1		9		
Cd	44	<10	3	1		57		
Cu	39	<30	3	3	53	152		301
Pb	<40	<40	3	0				
Hg	<1	0.4	3	0				
Ni	125	<30	3	2	59	121		183
Se	<4	27900	3	3	3450	4950		7620
Ag	<4	<2	3	1		45		
Th	<63	<3	3	3	9	55		78
Zn	40	50	3	3	240	381		560

Table A-51

Conventional Pollutants Detected in the Decanter Recycle Lignon (mg/l)
29 June - 2 July Samples

Pollutants	Intake Water	25 Mar. Sample	No. of Samples	No. of Detects	Min.	Mean	Median	Max
pH	7.94	7.3	3	3	7.57	7.7		7.83
Bod_5	<1	4410	3	3	2100	2170		2300
Oil & Grease	<0.005	450	3	3	275	333		422
TSS	1	42	3	3	543	639		800

Table A-52

Nonconventional Pollutants in the
Decanter Recycle Liquor (mg/l)

-29 June - 2 July Samples-

Pollutants	Intake Water	25 March Sample	No. of Samples	No. of Detects	Min	Mean	Median	Max
Acidity	51	4080	3	3	1700	2530		4075
Alkalinity	57	1140	3	3	1530	1800		1990
HCO_3	57		3	3	1530	1800		1990
CO_3	<1		3	0				
TOC	<1	7130	2	2	8780	9040		9810
COD	23	11500	3	3	31500	33300		34900
Phenolics	<0.005	1900	3	3	1.86	3.6		8.4
Br	0.1		3	0				
Cl	<0.01		2	2	2200	2200	2200	2200
F	0.2		3	3	143	285		331
Total Solids	148	56200	3	3	51700	58200		67600
Total Volatile Solids	6	53600	3	3	45600	51400		56900
Total Volatile Suspended Solids	0		3	3	501	611		780
Total Dissolved Solids	138	52000	3	3	43800	50700		61800
CN	<0.02	33	3	0				
SCN	<1		3	3	330	560		700
CN/Cl_2			2	0				
Kjeldahl Nitrogen	7	2100	3	3	9780	10600		11200
NH_3	2	1100	3	3	9310	9900		10300
NO_3			3	0				
NO_2	<0.01		3	0				
PO_4	0.02	100	3	3	18.8	20		23.2
SO_4	46	4300	3	3	12700	13700		15100
SO_3	<2		3	3	1560	1630		1690
S	7.2	4.6	3	3	710	822		924
Total Organic Nitrogen	5	1000	3	3	470	707		1100
Ca	23.8		3	3	3.42	4.35		4.89
Mg	5.3		3	3	0.95	1.07		1.24
Na	5.78	13	3	3	6.27	15.6		27.9
Al	0.257		3	3	4.16	6.76		11.1
Mn	0.024	0.063	3	3	0.007	0.016		0.031
V	0.032		3	2	0.032	0.081		0.13
B	0.121		3	3	71.1	79.8		93.8
Ba	0.031		3	3	0.149	0.162		0.182
Mo	0.018		3	3	0.086	0.122		0.143
Sn	0.017		3	2	0.328	0.332		0.336
Y	<0.01		3	0				
Co	<0.01		3	2	0.015	0.026		0.036
Fe	0.09	13.3	3	3	5.6	6.18		7.28
Ti	0.005		3	3	0.021	0.053		0.109

APPENDIX B

SECTIONS 4 AND 6

OF

LOW-BTU GASIFICATION GENERIC

SAMPLING PROGRAM FOR MULTIMEDIA

DEVELOPMENT OF REGULATORY SUPPORT DATA

11 June 1981

4.0 WASTEWATER SAMPLING AND ANALYTICAL PROTOCOLS

This section presents the rationale for the selection of pollutant parameters, the details of the sampling procedures and the analytical procedures to be used for water samples.

4.1 Wastewater Pollutant Parameter Selection Rationale

The objectives of this subsection are to identify and present the rationale for the selection of pollutant parameters to be analyzed in LBG wastewater samples. In general, pollutants were selected based on provisions set forth in the Federal Water Pollution Control Act of 1972, the 1977 Amendments and the Settlement Agreement in Natural Resources Defense Council, Inc. vs. Train (1979). Certain nonconventional pollutants were selected after reviewing analytical results collected under previous studies.

4.1.1 Wastewater Pollutant Parameters

Using the criteria described above, a tentative list of wastewater parameters and compounds of interest has been developed. These are expected to cover the entire LBG industry; however, some revisions may be necessary during the course of the program as unforeseen situations arise. The list will undergo constant scrutiny to ensure that all reasonable and prudent concerns are taken into account. The list is currently categorized as follows:

- Conventional pollutants
- Priority pollutants
- Appendix C pollutants
- Nonconventional pollutants

Conventional Pollutants

The conventional pollutants, listed in Table 4-1, were defined in Section 304(b)(4) of the 1977 Amendments to the Clean Water Act and at 44 FR 44501 (30 July 1978). Fecal coliform was not selected for this list since there is no reason to believe that there will be any fecal matter present in any synfuels wastewater samples.

Priority Pollutants

The priority pollutants, listed by category in Table 4-1, were also defined in the Clean Water Act (see Table 1 of Section 301) as well as the 1979 Settlement Agreement. The specific compounds were selected by reviewing the Organic Chemical Producers Data Base, reviewing the frequency of occurrence of the compounds in water, and determining whether or not a standard was commercially available. The data base used for these determinations is found in an Agency publication entitled, "Frequency of Organic Compounds Identified in Water" by Shackelford and Keith (Environmental Research Laboratory, EPA-600/4-76-062, Athens, Georgia, 1976).

Appendix C Compounds

The same data base was used for selection of the Appendix C compounds, which are listed in Table 4-1. This set of pollutants derives its name from Appendix C of the 1976 Settlement Agreement. As with the priority pollutants, the specific compounds in Table 4-1 are actually representatives of broad classes of pollutants. For example, α-terpineol and camphor represent the class of compounds called aliphatic terpenes. The same criteria were used to determine the specific Appendix C

Table 4-1

POLLUTANT PARAMETERS TO BE ANALYZED IN WASTEWATER SAMPLES

CONVENTIONAL POLLUTANTS

Biochemical Oxygen Demand (BOD_5)*
pH[1]
Oil and Grease
Total Suspended Solids (TSS)

*Total and Dissolved BOD_5

PRIORITY POLLUTANTS

Pesticides
Aldrin
Dieldrin
Chlordane
4,4'-DDT
4,4'-DDE
4,4'-DDD
α-Endosulfan
β-Endosulfan
Endosulfan sulfate
Endrin
Endrin aldehyde
Heptachlor
Heptachlor epoxide
α-BHC
β-BHC
γ-BHC
δ-BHC
PCB-1242
PCB-1254
PCB-1221
PCB-1232
PCB-1248
PCB-1260
PCB-1016
Toxaphene

Volatiles
Acrolein
Acrylonitrile
Benzene
Carbon tetrachloride
Chlorobenzene
1,2-Dichloroethane
1,1,1-Trichloroethane
1,1-Dichloroethane
1,1,2-Trichloroethane
1,1,2,2-Tetrachloroethane
Chloroethane
bis (Chloromethyl) ether*
2-Chloroethylvinyl ether
Chloroform
1,1-Dichloroethylene
1,2-trans-Dichloroethylene
1,2-Dichloropropane
1,2-Dichloropropylene
Ethylbenzene
Methylene chloride
Methyl chloride
Methyl bromide
Bromoform
Dichlorobromomethane
Trichlorofluoromethane*
Dichlorodifluoromethane*
Chlorodibromomethane
Tetrachloroethylene
Toluene
Trichloroethylene
Vinyl chloride

SYNFUELS ORGANIC NONCONVENTIONAL WASTEWATER POLLUTANTS

Benzoic Acid
Hexanoic Acid
β-Naphthylamine
α-Picoline
Dibenzothiophene
Formates

PRIORITY POLLUTANTS

Base/Neutral Compounds
Acenaphthene
Benzidine
1,2,3-Trichlorobenzene
Hexachlorobenzene
Hexachloroethane
bis (2-Chloroethyl) ether
1,2-Dichlorobenzene
2-Chloronaphthalene
1,3-Dichlorobenzene
1,4-Dichlorobenzene
3,3'-Dichlorobenzidine
2,4-Dinitrotoluene
2,6-Dinitrotoluene
1,2-Diphenylhydrazine (as azobenzene)
Fluoranthene
4-Chlorophenyl phenyl ether
4-Bromophenyl phenyl ether
bis (2-Chloroisopropyl) ether
bis (2-Chloroethoxy) methane
Hexachlorocyclopentadiene
Isophorone
Naphthalene
Nitrobenzene
N-Nitrosodimethylamine
N-Nitrosodiphenylamine
N-Nitrosodi-n-propylamine
bis (2-Ethylhexyl) phthalate
Butyl benzyl phthalate
Di-n-butyl phthalate
Di-n-octyl phthalate
Diethyl phthalate
Dimethyl phthalate
Benzo(a)anthracene
Benzo(a) pyrene
3,4-Benzofluoranthene
Benzo(k)fluoranthene
Chrysene
Acenaphthylene
Anthracene
Benzo (g,h,i)perylene
Fluorene
Phenanthrene
Dibenzo(a,h)anthracene
Indeno(1,2,3-c,d)pyrene
Pyrene
2,3,7,8-Tetrachlorodibenzo-p-dioxin

SYNFUELS GENERAL NONCONVENTIONAL WASTEWATER POLLUTANTS

Acidity
Alkalinity
Total Solids (TS)
Total Volatile Solids (TVS)
Total Dissolved Solids (TDS)
Chemical Oxygen Demand (COD)
Ammonia
Total Kjeldahl Nitrogen
Total Phosphorus
Total Organic Carbon (TOC)
Total Phenolics (4AAP)
Settleable Solids (SS)[1]
Thiocyanate
Sulfate
Sulfite
Sulfide
Nitrates
Dissolved Oxygen (DO)[1]
Temperature[1]
Volatile Dissolved Solids (VDS)
Aluminum
Barium
Bismuth
Boron
Calcium
Cobalt
Gold
Indium
Iron
Lithium
Magnesium
Molybdenum
Platinum
Potassium
Silicon
Sodium
Strontium
Tellurium
Tin
Titanium
Tungsten
Uranium
Vanadium
Yttrium

[1]On-site analysis.

APPENDIX C COMPOUNDS

1. Acetone
2-21. n-Alkanes (C_{10}-C_{30}) (C_{12}*)
22. Biphenyl
23. Camphor*†
24. Chlorine[1]
25. Cumene*
26. Dibenzofuran*
27. Di-n-butylamine†
28. Diethylamine*†
29. Diethyl ether†
30. Dimethylamine†
31. Diphenylamine*†
32. Diphenyl ether*
33. Methyl ethyl ketone
34. Nitrites
35. Styrene
36. α-Terpineol*†

*Candidate for Stable Label Standard:
†Tentatively chosen compounds to represent general classes.

PRIORITY POLLUTANTS

Acid Compounds
2,4,6-Trichlorophenol
p-Chloro-m-cresol
2-Chlorophenol
1,4-Dichlorophenol
2,4-Dimethylphenol
2-Nitrophenol
4-Nitrophenol
2,4-Dinitrophenol
4,5-Dinitro-o-cresol
Pentachlorophenol
Phenol

Metals
Antimony
Arsenic
Beryllium
Chromium
Cadmium
Copper
Lead
Mercury
Nickel
Selenium
Silver
Thallium
Zinc

Other
Cyanide

*These compounds have been recently removed from the priority pollutant list (see 46 FR 2266 and 46 FR 10723)

pollutants as were exercised in the selection of the priority pollutants. These are summarized below and discussed at length elsewhere:*

(1) The compound chosen had to have been identified in water with a frequency of five percent or more with respect to other members of that chemical class that had been identified in water.

(2) The compound chosen had to have a source of commercially available standards. The standards furthermore had to be available in reasonable purity (>90 percent) and at reasonable prices.

(3) To help prioritize choices with a chemical class, the "Organic Chemical Producers Data Base" was checked. An updated 28 November 1979 version was used for the present criteria choices.

(4) To further help prioritize choices within a chemical class, the U.S. EPA "Toxic Substances Control Act Chemical Substances Inventory," Volumes II and III (May 1979), were also used. This information was not available in 1976, but was used now because of its relationship to the Agency's interest in toxic chemicals and its data on what toxic chemicals are being manufactured or imported in the U.S.

Nonconventional Pollutants

The potential set of nonconventional pollutants represents all compounds that are neither conventional or priority pollutants. Each industrial category is screened to determine which of the nonconventional pollutants would appear at concentrations warranting potential concern. For the LBG segment of the synfuels industry, this includes a brief list of six organic pollutants and a more extensive list of inorganic pollutants and

*Rational for Synfuel Protocol, preliminary draft, Radian Corporation, EPA Contract No. 68-01-5163, June 1981.

water quality parameters. The organic nonconventionals, listed in Table 4-1, were selected after review of results from several synthetic fuels industry environmental assessments and a review of the current literature in the area of synthetic fuels wastewater analysis. From these classes, specific compounds were selected to be representative of the class. The individual selections were based on: (1) representativity of class, (2) frequency of occurrence in synthetic fuels related wastewater, (3) availability of pure standards, and (4) detection using existing screening protocols (EPA Methods 624 and 625). Additional detail is provided in the previously cited Rational for Synfuel Protocol.

The remaining nonconventional pollutants are also listed in Table 4-1. The compounds in the list from acidity to total phenolics (4AAP) are often referred to as water quality parameters. They are indicators of the presence of general classes of compounds (e.g., total phenolics - indicates the presence of phenolic-type compounds) and general properties of streams (e.g., alkalinity - is the capacity of water to neutralize a strong acid to a designated pH).

The measurement of settleable solids (SS) is an indicator of the amount of solid material that will settle in a relatively short period of time (i.e., approximately one hour). It is a particularly useful parameter for streams representing runoff from storage and disposal areas.

Sulfur and nitrogen compounds are gasification products that can appear in wastewater and solid waste streams associated with synfuels processing. Formation of sulfate, thiosulfate, carbonyl sulfide, and thiocyanate during synfuels processing is important to operation of sulfur recovery technologies. As these

compounds accumulate in a sulfur recovery liquor, the effectiveness of sulfur removal and recovery is reduced. As such, a periodic release (blowdown) of the liquor is required. Knowledge of the levels of these inhibitors in liquid streams from facilities without sulfur recovery will provide input for design of sulfur recovery units and estimation of blowdown quantity and quality.

The nonconventional metal wastewater pollutants listed in Table 4-1 are those (exclusive of the priority metal pollutants) that are capable of quantitative determination by Inductively-Coupled Argon Plasma Emission Spectroscopy (ICAPES). Although many of these are not likely to be found in LBG waste streams, both the nature of the current study and the economics of ICAPES analysis provide incentive for determination of these elements. A principal objective of the current study is to fill many of the data gaps identified thus far in the LBG wastewater and solid waste data base. This suggests that more complete characterization of samples that might specifically be required for development of environmental regulations is warranted. Also, the cost of analyzing additional elements by ICAPES does not increase linearly, i.e., running a few elements or all of the elements does not result in a substantial cost difference.

4.2 Wastewater Sampling Procedures

The collection of representative samples is essential in obtaining quality data. Improper sampling techniques can result in contamination of the samples and inaccurate results. Therefore, measures have been incorporated to ensure quality sampling in compliance with the procedures documented by EPA. Whenever possible, established protocols will be used to perform the sampling. When situations arise where established protocols cannot be used, a detailed description of the sampling procedure

will be documented in a bound, paginated field or laboratory notebook. In these cases, guidance will be provided by the ASTM manual for water and wastewater sampling.

The primary EPA reference for sampling effluent streams is in "Sampling and Analysis Procedures for Screening of Industrial Effluents for Priority Pollutants," April 1979. Additional information is found in the 3 December 1979 and 18 December 1979 issues of the Federal Register. The sampling procedures described below are based on these three references.

Each water sample consists of a number of blank, grab, and composite sub-samples as illustrated in Table 4-2. Depending on which parameters are determined at each site, and on the effluent stream composition some of these sub-samples may not be collected. Additional parameters such as pH, temperature, dissolved oxygen, and settleable solids are performed on-site.

4.2.1 Composite Samples

For composite samples, compositing time is typically 24 hours. Samples will be composited automatically utilizing ISCO Model 1580 Automatic Samplers using the guidelines listed below:

- Maximum time interval between aliquot samples is 30 minutes;
- Minimum aliquot size is 100 ml;
- Minimum composite volume is 9.5 liters (approximately two and one-half gallons);
- A single composite jug is used;
- The composite sample is stored in an iced bottle during collection (4°C);
- All parts of the sampling system are cleaned with hot detergent water and rinsed with blank water;

Table 4-2

COMPOSITION OF A WASTEWATER SAMPLE SET

Parameter	Sample Type	Sample Container	Sample Volume	On-Site Preservative	Laboratory	Frequency of Collection
C/G Extractable Organics						
C_1 - Base/Neutrals, Acids	Composite/Grab	Glass Bottle Teflon Lid Liner	1000 ml	Stable label isotopes, 4°C	Organics-IFB	24 hour composite
C_2 - Pesticides	Composite/Grab	Glass Bottle Teflon Lid Liner	1000 ml	4°C	Organics-IFB	24 hour composite
CB - Composite Blank[1]	Blank	Glass Bottle Teflon Lid Liner	3000 ml	4°C	Organics-IFB	first day of sampling
M-1 - Metals, Task 1	Composite/Grab	Plastic Bottle				
Total			1000 ml	HNO_3, to pH < 2	Metals-IFB	24 hour composite
Dissolved			500 ml	HNO_3, to pH < 2	Metals-IFB	24 hour composite
M-2 - Metals, Task 2	Composite/Grab	Plastic Bottle				
Total			1000 ml	HNO_3, to pH <2	Metals-IFB	24 hour composite
Dissolved			500 ml	HNO_3, to pH <2	Metals-IFB	24 hour composite
I - Group I Parameters[3]	Composite/Grab	Plastic Bottle	1 liter	4°C	Radian	24 hour composite
II - Group II Parameters[4]	Composite/Grab	Amber Glass Bottle	1 quart	H_2SO_4 to pH < 2, 4°C	Radian	24 hour composite
V1-V4 - VOA Preserved	Grab	Glass vial with Teflon septum	40 ml each	$Na_2S_2O_3$ to remove Cl_2, 4°C	Organics-IFB	every 6 hours
VB - VOA Trip Blank[2]	Blank	Glass vial with Teflon septum	40 ml	4°C	Organics-IFB	one per day
VR_1-VR_4 VOA unpreserved replicates	Grab	Glass vial with Teflon septum	40 ml each	4°C	Organics-IFB	every 6 hours
P-OH - Phenolics (4AAP)	Grab	Amber Glass Bottle	1 quart	H_2SO_4 to pH < 2, 4°C	Radian	1 grab per day
CN-Cyanide, Thiocyanate	Grab	Plastic Bottle	500 ml	$PbNO_2$, Filter, Ascorbic Acid to remove Cl_2, NaOH to pH >12, 4°C	Radian	1 grab per day
O/G - Oil and Grease	Grab	Wide-mouth Glass Bottles, Teflon Lid Liner	1 quart	H_2SO_4 to pH < 2, 4°C	Radian	1 grab per day
Sulfide/Sulfite	Grab	Plastic Bottle	500 ml	Zinc acetate, 4°C	Radian	1 grab per day

[1]Blank water run through sampler prior to initiating sample collection.
[2]Blank water transported to and from site.
[3]Alkalinity, Acidity, BOD, TS, TDS, TSS, TVS, sulfate, nitrite, nitrate.
[4]COD, Total Nitrogen, NH_3, Total Phosphorus, TOC.

- New tubing is used for each sampling line and for each pump at each individual outfall or sample location;

- A field compositer blank is taken the first day at each site by pumping five liters of blank water through the ISCO sampling system before collecting any samples, (the last three liters pumped are analyzed as a blank); and

- When sampling raw discharges, the minimum intake velocity of the sampler is 0.6 m/second (two feet/second).

The composite is blended to a homogeneous state before transfer to the various sample containers.

A portion of the composite sample is transferred to two one liter and two 500 ml plastic bottles for metals analyses. Samples for dissolved metals analysis are filtered, while total metals samples are not. In each case, the sample is preserved by nitric acid addition to a pH of less than two. An additional 1,000 ml is transferred into a graduated cylinder for the acid and base/neutral extractables sample. An amount sufficient to fill a 1,000 ml glass bottle to a level of approximately 1/2 inch is poured from the graduated cylinder. The two glass ampules containing the acid and base/neutral stable lable cocktails are then introduced into the 1,000 ml bottle and crushed with a stainless steel rod. The remaining portion of the sample is then poured over the rod into the 1,000 ml bottle.

The remaining water quality parameters which are determined from the composite sample are collected in two sample containers. A one liter sample in a plastic bottle is collected for those parameters which do not require preservation. A separate one liter sample in a glass bottle is acidified with sulfuric acid (H_2SO_4) for the remaining parameters.

With the exception of the metal samples, all samples are kept at 4°C until analyses are initiated. All glass bottles have Teflon-lined caps.

4.2.2 Grab Samples

Some of the parameters listed in Table 4-2 must be collected as grab samples. Grab samples are obtained at the midpoint of the compositing period in a turbulent, well-mixed section of the effluent stream. Grab sampling is conducted because of rapid change in the parameter of interest (e.g., volatile organics, phenolics, cyanides).

Duplicate purgeable samples (VOAs) are obtained in 40 ml vials with Teflon septa caps. The vial is carefully filled from the water source to be sampled without aeration or overfilling the bottle. A small amount of this water is added until the meniscus is visible above the lip of the vial. The cap with the Teflon septum is screwed on the vial in such a way as to leave no visible bubbles of air when the bottle is inverted.

Sodium thiosulfate ($Na_2S_2O_3$) is used to stabilize VOA samples containing residual chlorine. The production of haloforms continues in such samples if they are not stabilized. Waste streams that have been treated with chlorine are tested on-site to determine whether or not preservation is needed. No such streams are known to exist in the LBG industry. If preservation is needed, both preserved and non-preserved samples are collected.

A one-liter grab samples is collected for cyanide. Oxidizing agents, such as chlorine, may result in the decomposition of many cyanides. At the time of collection, the sample is tested for these agents with orthotoluidine. If needed, ascorbic

acid is added to eliminate the residual chlorine. Then, two ml of 10 N sodium hydroxide is added per liter of sample or until the pH is greater than 12.

A one-quart grab sample is collected in an amber glass bottle for phenolics. Preservation of the sample is accomplished by addition of H_2SO_4 to a pH of less than two.

A one-quart sample is collected for oil and grease analysis. A wide-mouth glass bottle with a Teflon cap liner is employed to collect the sample which is preserved by addition of H_2SO_4 to a pH of less than two. Oil tends to form a film on top of water in quiescent streams. To obtain a representative sample, the sample should be collected in an area of complete mixing.

4.2.3 Bottle Preparation

Organic-free, deionized blank water is prepared at Radian for use in sampling activities. The water is prepared by passing tap water through commercial ion-exchange resin beds, placed in an all-glass still with caustic $KMnO_4$, and distilled at a slow rate (six liters/day) into a closed-glass recipient purged with zero-grade helium.

No organic solvents or materials ever enter this distilling system. The organic-free blank water produced is further treated for volatile organic analysis (VOA) by purging it with zero-grade helium to remove any volatile organic compounds remaining.

In general, bottle preparation consists of washing with detergent and water and rinsing with organic-free deionized

water. However, additional preparation is required for volatile organics and asbestos.

Radian's bottle preparation for volatile organics is as follows. The 40 ml vials for volatile organic samples are washed with detergent and water, rinsed in blank water and placed in a 100°C oven for 30 minutes. The Teflon-lined caps are washed and rinsed and allowed to air dry. The vials are tightly capped and are ready for packing.

Sample containers for asbestos are supplied by EPA's Sample Control Center. These bottles have been rinsed with filtered water to insure no fibers are present. The bottles are not to be opened until the time of collection.

4.2.4 Logbook Recording Procedures

Prior to actual sampling at each of the facilities, pertinent information will be documented in a bound, paginated laboratory notebook. This information will include the name and location of the facility as well as the name and telephone number of key personnel at the facility. Additional information concerning each individual stream sampled will also be documented in the notebook. This additional information will consist of:

- A detailed diagram and description of each sample stream,
- A description of the sampling technique used to collect the sample,
- Documentation of obstacles encountered during sampling,
- Amount and type of preservation chemicals used,
- The date and time samples are collected, and
- The names of individuals comprising the sampling team.

All samples will be given a unique identification number to help with sample traffic control. The numbers will be assigned by the EPA Sample Control Center (SCC). All ensuing references to the sample will be by the SCC sample number. The samples will also be labeled and the following information will be placed on the label:

- Type of sample and facility name,
- Date and time the sample is taken, and
- The initials of the samplers.

The unique identification number will also be documented in the laboratory notebook for cross-referencing purposes. Any mistake made in recording data into the laboratory notebook will be crossed out with a single line and initialed.

4.3 Wastewater Analyses

The purpose of an analytical method is to provide qualitative and/or quantitative data for the analytical parameters identified in the test plan. To achieve this purpose, a wide range of analytical tools, ranging from classical "wet-chemical" techniques to sophisticated instrumental tools must be employed. In the following paragraphs, a brief account of the analytical methods chosen and preliminary treatments or preparations required for the test effort is presented.

Wastewater samples collected at the various facilities will be analyzed for the conventional, 129 priority, Appendix C, and nonconventional pollutants. All priority pollutant analyses are performed by EPA (IFB lab) contract laboratories. These laboratories should follow the protocol outline in "Sampling and Analysis Procedures for Screening of Industrial Effluents for

Priority Pollutants," April 1979 and in the 3 December 1979 Federal Register. Radian is scheduled to perform the remaining conventional and nonconventional analyses. Brief summaries of the analytical methods are presented below by pollutant categories.

4.3.1 Methods of Analysis for Conventional Pollutants

The analysis of samples for the conventional pollutant parameters will be the methods specified in "Methods for Chemical Analysis of Water and Wastes," EPA-600/4-79-020 (March 1979). A summary of the methods and the EPA Method Number are detailed in the following paragraphs.

Biochemical Oxygen Demand, BOD (EPA 405.1)

BOD is a measure of the change in the amount of dissolved oxygen in a sample when incubated in the dark at 20°C for five days. This change in dissolved oxygen is related to the amount of organic matter which is assimilated and oxidized by microorganisms. An initial dissolved oxygen concentration is determined and after five days a final concentration is determined.

pH Value (EPA 150.1)

Hydrogen ion activity is determined on-site and in the lab electrometrically using a glass-referenced electrode pair or a combination glass electrode. This analysis will be performed onsite.

Oil and Grease (EPA 413.2)

Oil and grease is determined by an extraction of an acidified sample with fluorocarbon-113. The oil and grease is determined by comparison of infrared absorbance of the sample extract with standards. This method is particularly applicable to samples with elemental sulfur.

Total Suspended Solids (EPA 160.2)

Total suspended solids are determined by a gravimetric procedure in which an aliquot of sample is filtered through a fine glass fiber filter. The filter and retained solids are dried to a constant weight at 103° to 105°C.

4.3.2 Methods of Analysis for Organic Pollutants

Wastewater samples collected at the various facilities will be analyzed for the 129 priority, organic nonconventional, and Appendix C pollutants. Analyses for the priority pollutant volatiles, base/neutrals, and acid compounds, as well as the organic nonconventional pollutants, will be conducted by the established EPA Methods 1624 and 1625.

Pesticide priority pollutants are to be analyzed by Electron Capture-Gas Chromatography (EC-GC) using the EPA method published in the Federal Register, Vol. 38, Number 125, Part II, pp. 17318-17323.

The Appendix C pollutants will be analyzed by the analytical methods presented in Table 4-3. Except for the colorimetric methods for chlorine and nitrite measurements, the proposed methods for the Appendix C compounds follow the established EPA Methods 1624 and 1625.

Table 4-3

APPENDIX C ANALYTICAL PROTOCOL

Pollutant(s)	Analytical Method	EPA Method Number
Acetone	VOA	1624
n-alkanes (C_{10}-C_{30})	Base/Neutral	1625
Biphenyl	Base/Neutral	1625
Chlorine	Colorimetric	Standard Methods 14th Edition, 1975 Method 409D, p 325
Dialkyl Ethers	VOA	1624
Dimethyl Ether Diethyl Ether		
Dibenzofuran	Base/Neutral	1625
Diphenyl Ether	Base/Neutral	1625
Methylethyl Ketone	VOA	1624
Nitrites	Colorimetric	Standard Methods 14th Edition, 1975 Method 424, p 434
Secondary Amines	Base/Neutral	1625
Dibutyl Diethyl Diphenyl Dimethyl		
Styrene	VOA	1624
Terpenes	Base/Neutral or Acids	1625
Camphor Cumene α-Terpineol		

4.3.3 Priority Pollutant Metals

Priority metal pollutants (with the exception of mercury) are to be analyzed by Atomic Absorption (AA) Spectroscopy and Inductively-Coupled Argon Plasma Emission Spectroscopy (ICAPES). The former is described in 40 CFR Part 136 and the latter can be found in the amendments proposed in the 3 December 1979 Federal Register, page 69559.

Mercury (EPA 245.2)

Mercury analysis is performed by automated cold vapor atomic absorption. This physical method is based on the absorption of radiation at 253.7 nm by mercury vapor. Mercury is reduced to the elemental state and aerated from solution. Absorbance is measured as a function of mercury concentration.

4.3.4 Other Priority Pollutants

Cyanide (EPA 335.2)

Total cyanide is analyzed by a distillation procedure in which the cyanide is removed and concentrated by refluxing the sample with sulfuric acid and magnesium chloride. The liberated hydrogen cyanide is collected in a sodium hydroxide absorbing solution. The concentration of cyanide in the absorbing solution is measured by titration for cyanide concentrations greater than one milligram per liter and by colorimetry for cyanide concentrations less than one milligram per liter.

In the colormetric procedure the cyanide is converted to a cyanogen chloride by the addition of chloromine-T. Cyanogen chloride forms a red-blue dye with the pyridine barbituric acid

reagent. The absorbance of the dye is read at 578 nm and compared to a set of standards.

Cyanide, Amenable to Chlorination [Cyanide-A] (335.1)

Cyanide-A is not a priority pollutant; however, it provides a useful measure of cyanide treatable by chlorine or similar oxidizing agents. Cyanide-A is analyzed by taking two portions of the sample and adding calcium hypochlorite to one portion of the sample. The two portions are then analyzed for cyanide as described above, and cyanide-A is calculated by difference.

4.3.5 Methods of Analysis for Nonconventional Pollutants

The analysis of samples for the nonconventional pollutant parameters will be performed using methods specified in "Methods for Chemical Analysis of Water and Wastes," EPA-600/4-79-020 (March 1979) and "Standard Methods for the Examination of Water and Wastewater," 14th Edition (1975). A brief summary of the methods and the EPA Method Number are detailed in the following paragraphs.

Acidity (EPA 305.1)

Acidity is determined by titration using a dilute sodium hydroxide standard with a pH meter for end point detection at pH 8.2. Acidity is reported in mg/l of calcium carbonate.

Alkalinity (EPA 310.1)

Alkalinity is determined by titration using a dilute sulfuric or hydrochloric acid standard with a pH meter for end point detection at pH 4.5. This measures the acid neutralizing

capacity of the sample and is reported in mg/l of calcium carbonate.

Total Solids (EPA 160.3)

Total solids are determined by a gravimetric method in which an aliquot of the sample is placed in a tared container and evaporated to dryness at 103° to 105°C.

Total Volatile Solids (EPA 160.4)

Total volatile solids are determined by a gravimetric procedure in which the residue from the determination of total solids is ignited in a muffle furnace at 550°C for 15 minutes. The weight loss after heating at 550°C represents the volatile solids.

Total Dissolved Solids (EPA 160.1)

Total dissolved solids are determined by a gravimetric method in which a portion of the sample is filtered through a fine glass fiber filter. A measured aliquot of the filtrate is placed in a tared container and evaporated to dryness at 180°C.

Chemical Oxygen Demand (COD) (EPA 410.1)

Chemical oxygen demand is determined by refluxing the sample with potassium dichromate and sulfuric acid for two hours. After cooling, the excess dichromate is titrated with ferrous ammonium sulfate. The amount of potassium dichromate consumed is proportional to the amount of oxidizable organic matter in the sample.

Ammonia (NH_3-N) (EPA 350.1)

Ammonia is determined by distilling the sample with sodium thiosulfate to remove interfering species, followed by the reaction of alkaline phenol and hypochlorite to form indophenol blue that is measured colorimetrically.

Nitrogen, Total Kjeldahl (EPA 351.3)

Nitrogen which is organically bound in the trinegative state is determined by the Kjeldahl method. Amino nitrogen is digested to ammonium sulfate in the presence of sulfuric acid, potassium sulfate, and a mercuric sulfate catalyst. The digested sample is decomposed by sodium thiosulfate and the ammonia is distilled under alkaline conditions into a boric acid solution. The ammonia in the distillate is titrated with a dilute sulfuric acid standard to the lavender end point of the mixed indicator for concentrations greater than one mg NH_3-N/l or by nesslerization for concentrations less than one mg NH_3-N/l.

Phosphorus, Total (EPA 365.2)

Total phosphorus in water is digested to the orthophosphate form by boiling with sulfuric acid and ammonium persulfate. The pH is adjusted up to pH 7.0 $\pm$ 0.2 with sodium hydroxide and the orthophosphate is determined using a colorimetric method. Orthosphosphate reacts with ammonium molybdate and potassium antimony tartrate in an acidic medium to form a heteropoly acid, phosphomolybdic acid, which is reduced by ascorbic acid to the highly colored molybdenum blue. The absorbance of the sample is measured at 880 nm and compared to a set of standards.

Total Organic Carbon, TOC (EPA 415.1)

Total organic carbon is determined by injection of a small aliquot of sample into an Oceanography International carbon analyzer. The organic matter is oxidized to CO_2 and is measured by means of a nondispersive infrared analyzer. A set of standards is also injected into the analyzer to determine the concentration versus response relationship.

For low-level TOC concentrations, a Dorhmann Model 512D organic carbon analyzer is used. This instrument utilizes a flame ionization detector to provide a linear response up to 10 mg/l carbon concentration.

Total Phenolics (EPA 420.1)

Total phenolics are determined by a distillation procedure to remove interferences followed by a colorimetric measurement. Phenolics in the distillate react with four amino antipyrine at pH 10 in the presence of potassium ferricyanide to form a colored antipyrine dye. The absorbance is read in a spectrophotometer at 510 nm and compared to a set of standards. For phenolic concentrations less than 50 ug/l, the antipyrine dye is extracted into chloroform and the absorbance read at 460 nm. This absorbance is compared to a set of standards.

Settleable Solids (EPA 160.5)

Settleable solids are measured volumetrically with an Imhoff Cone. In samples where separation of settleable and floatable solids occurs, the floating materials are not measured. This analysis will be performed onsite.

Thiocyanate (Standard Methods 413 K)

Thiocyanate analysis is performed spectrophotometrically. At an acidic pH, ferric iron forms an intense red color with thiocyanate. The amount of thiocyanate is proportional to the intensity of the color.

Sulfate (EPA 375.2)

Sulfate analysis is performed by a colorimetric method. The sample is passed through a sodium form cation-exchange column to remove multivalent metal ions. The sample is reacted with an alcohol solution of barium chloride and methylthymol blue (MTB) to form barium sulfate. The pH is raised to react any excess barium with MTB. The amount of uncomplexed MTB is equal to the sulfate present.

Sulfide (EPA 376.2)

Sulfide analysis is performed by titrating an acidified sample containing a starch indicator with a standard potassium iodide-iodate titrant.

Nitrates (EPA 353.3)

Nitrate analysis is performed spectrophotometrically. A filtered sample is passed through a column containing granulated copper-cadmium to reduce the nitrate to nitrite. The nitrite is determined by diazotizing with sulfanilamide and coupling with N-(1-naphthyl)-ethylenediamine dihydrochloride to form a highly colored azo dye which is measured with a spectrophotometer. Separate nitrate-nitrite values are obtained by performing the procedure twice; with and without the Cu-Cd reduction step.

4.3.6 Nonconventional Metals

Wastewater samples will be analyzed for nonconventional metal pollutants by atomic absorption (AA) and inductively-coupled argon plasma emission spectroscopy (ICAPES). The former is described in 40 CFR Part 136 and the latter can be found in the amendments proposed in the 3 December 1979 Federal Register, page 69559.

6.0 PROGRAM QUALITY ASSURANCE/QUALITY CONTROL

The objectives of the quality assurance procedures for this program are to assure, assess, and document the precision, accuracy, and adequacy of data developed during the program and to assure the accuracy of the technical work performed by Radian on the tasks. A well-designed quality assurance/quality control (QA/QC) program is an integral part of this data gathering effort. The QA/QC program can be categorized into three areas:

- Sample collection,
- Sample transportation, and
- Sample analysis.

In addition, quality control for data reporting and review is also necessary to ensure accurate results. The project Technical Director is the QC coordinator for this program. He is responsible for the development and implementation of all phases of the QC activities. The QC coordinator schedules all QC activities, and coordinates the reporting, recordkeeping, and QC data analysis. He is responsible for maintaining mechanisms for problem detection, reporting, and correction of any analytical problems. A QC coordinator in each Radian laboratory will also assist in the implementation of quality control procedures.

6.1 Quality Control for Sample Collection

The objectives of a field quality control program are to:

- Evaluate all aspects of the sampling methodology which affect the quality of the data produced, and
- Identify problems in all areas of the program as they occur.

Specific quality control programs for each sample medium include considerations in the following areas:

- Experimental design review of each site-specific sampling plan to ensure that the samples collected will yield the information required from the visit. This statistical review should include selection of sampling locations, adequate numbers of replicate and control samples, and evaluation of representativeness of samples, and sample allocation to laboratories.

- Training and standardized instructions which ensure the proper implementation of the experimental design, correct use of all equipment, and adherence to the sampling protocols.

- Forms developed for each specific sampling activity to aid in sample documentation and recordkeeping and minimize recording errors and ensure complete data.

- Quality control tests to evaluate sampling, including:

  --blank or control samples to check for interferences and contamination,

  --field spiking of stable label compounds to evaluate recoveries,

  --replicate samples to evaluate sampling variations by parallel sample compositions, and

  --inter-sampling team checks for standardization of equipment and personnel.

- Quality control checks to evaluate calculations and monitor sampling equipment (e.g., flow audits of sampling pumps).

Detailed records of all aspects of the sampling strategy and its implementation will be kept, as well as documentation of the chain-of-custody of all samples collected. Logbooks will be used as a convenient means of permanently recording information on pumps, calibration, source and lot number of sampling media and reagents, sampling sites and times.

Quality control samples included with the samples collected during the site visit will provide the data necessary to evaluate accuracy and precision. Each set of samples collected at each site should include the following minimum QC samples and tests:

- A field blank appropriately handled to simulate sample handling.
- A standard or control sample handled in the same manner as the blank. This control sample should contain known amounts of the parameters of interest in the field samples.
- One or more duplicate samples (sample splits).

After analysis, these quality control samples will be combined with laboratory QC results to provide estimates of background contamination, recoveries, interferences, and variability, and accuracy of the field sample concentrations.

Each field sample is coded with a sample number (field number) and sets of samples will be identified as a group by a sequence number. Samples and sample containers will be identified with the individual field numbers. Copies of the sample documentation sheets will accompany the samples in shipment while the original will remain with the sampling personnel.

6.2 Quality Control for Sample Transportation

An important aspect of quality control for programs with a large number of samples is a system to manage samples collected and analyzed during the various tasks. Detailed recordkeeping and control of samples are essential to a successful laboratory program. The following sample control procedures are modeled after the procedures currently used in Radian's laboratories.

All sampling activities are documented by the use of EPA Traffic Reports. The EPA Sample Control Center issues separate reports for organics, metals, and asbestos. The organics traffic report is employed by the sampling crew to document all additional samples collected. Supplemental information is recorded in a laboratory notebook. Copies of the traffic report are mailed to the Sample Control Center, to the laboratory receiving samples, and a copy is retained by the sampling crew chief. With the exception of metals, all samples are shipped in insulated containers by air express on the day they are collected. The shipping container is labeled:

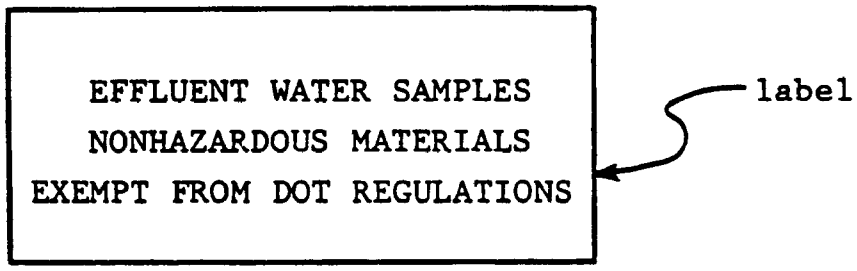

Information regarding sample shipment is forwarded to the Sample Control Center for distribution to the various laboratories. The metal samples are shipped at the completion of sampling at each site.

Several laboratories are scheduled to conduct the analyses. Laboratories under contract to EPA (IFB labs) will conduct analyses for the priority pollutants excluding total cyanide. Radian Corporation will perform all other analyses which included total phenolics, total cyanides, conventionals, and nonconventionals pollutants.

To ensure that the integrity of the samples is maintained, a special pressure-sensitive label is placed across all sample container lids. Access to the sample within the bottle

cannot be obtained without destroying the label. Any visible means of tampering with the sample bottles, detected by the individual laboratories, is documented and the analytical results from the container are noted to be suspect.

When chain-of-custody documentation is required, additional documentation will be necessary. The primary objective of chain-of-custody is to create an accurate written record that can be used to trace the possession of the sample from the moment of its collection through its introduction into evidence. A sample is in custody if it is in any of the following states:

a. In actual physical possession,

b. In view, after being in physical possession,

c. In physical possession and locked up so that no one can tamper with it, or

d. In a secured area, restricted to authorized personnel.

EPA's Handbook for Analytical Quality Control in Water and Wastewater Laboratories (1979, p. 12-3 through 12-10) discusses the detailed requirements for a complete chain-of-custody protocol. This reference should be used if these requirements are imposed on any of the site visits.

6.3 Quality Control for the Laboratory

Sample control, begun in the field, is the responsibility of the laboratory on the day the samples are received. As each sample is received, it is assigned a unique number and logged into the master log book. This log includes date of receipt, sample description (from label), and sample type (i.e., amber gallon jug-water, sealed five-ml ampule, etc.). A laboratory routing sheet (see Figure 6-1) is prepared which includes

SAMPLE ROUTING FOR EPISODE _____

_____ PARTIAL _____ COMPLETE

CONTRACT NO. _____ DATE RECEIVED _____

CLIENT: _____ NOTEBOOK REFERENCE _____

SAMPLE CHARACTERISTICS: _____

_____

BACKGROUND INFORMATION: _____

_____

_____

SPECIAL INSTRUCTIONS: _____

_____

ANALYSES REQUIRED: _____

LABORATORY: _____ RECEIVED BY: _____ DATE: _____

ANALYSIS SCHEDULE _____ NORMAL LAB ROUTINE _____ WITHIN

_____ IMMEDIATE

PROGRAM MANAGEMENT: PM _____ PD _____ IL _____

SAMPLE INVENTORY

SAMPLE NO.	CLIENT I.D.	DATE TO LAB	DATE RETURNED	COMMENT

Figure 6-1

SAMPLE CONTROL ROUTING SHEET

such additional information as special handling instructions, extraction procedures, cleanup and/or special preparation needs, analyses required, time limits, and route (i.e., Extractions Laboratory, Trace Metals Laboratory, Water Laboratory, etc.). An advance copy of this form is forwarded to each of the laboratories that eventually will analyze the sample. This aids the laboratory supervisor in scheduling the workload for maximum efficiency.

The original of this sheet is kept in the master file by sample control. When all analyses are complete, the sample returned, and the analysis request sheets returned, the sample is logged out of the system. Concurrently, the routing sheet is completed, appropriate paperwork filed in the completed master file, and the sample stored or discarded, whichever is appropriate.

Each person working with a sample maintains a bound notebook in which all work done on a sample is recorded. Since this reference is listed on each of the request sheets returned to sample control, a complete history of a sample is thus maintained.

6.4 Quality Control for Analytical Procedures

Routine laboratory quality control procedures will be blended with the specific QA/QC requirements for this program to provide an effective and efficient laboratory protocol capable of defining the quality of the sample concentrations for each set of samples. Standard analytical methods will be used in all cases. Any deviations will have to be approved prior to analysis. The QA/QC program utilized in each laboratory program includes consideration of the following areas:

- Training and method validation;
- Equipment and supplies;
- Calibration and standards;
- Quality control test samples:

  --blanks,
  --replicate extractions and analysis,
  --blind standards, and
  --spiked samples;

- Data handling and reporting;
- Participation in EPA and other check sample programs; and
- Quality assurance audits.

Quality control for the conventional and nonconventional pollutant analyses will include the following:

- Ten percent of each analysis will consist of duplicate and spiked samples.
- For each distillation procedure used, daily distillations of standards for recovery will be made.
- EPA quality-control standards and/or independent "blind" standards will be analyzed.

As quality control measures, 10 percent of the solids will be digested in duplicate and 10 percent of the extractions will be done in duplicate. Certifiable standards of organic material are to be digested alongside the solid samples and analyzed alongside the digested solids. Aqueous standards are to be analyzed alongside the extractions. If the results of these analyses do not fall within the expected limits of concentration, the problem will be resolved and the samples reanalyzed. Blanks will be analyzed alongside samples to provide data as to possible contamination of samples.

The exact QA/QC protocol will depend on the individual laboratory and the particular analytical method. One critical requirement is that the QA/QC procedures in the lab be thoroughly documented. Laboratory QC manuals or instructions from each IFB and subcontractor lab will be appended with the site-specific plan for each plant visit.

6.5 Quality Control for Data Reporting and Review

Data forms as shown in Figures 7-1 to 7-5 will be prepared for each type of analysis performed during a site visit. These forms will be used in each laboratory performing analyses.

Specific reporting requirements will be stated on the form for each parameter requiring analysis. Detection limits will be required for all compounds not detected. Space for comments will be included to document any observations, problems, or deviations from protocol. The laboratory QC Coordinator will review each data form, and will note the review with his/her signature.

When all analyses are complete for a particular sample episode (or a particular site visit) the set of results will be reviewed by a chemist familiar with each of the analyses performed. All QA/QC samples and procedures will be summarized at this time. Percent differences between replicate samples, replicate extracts, and replicate analyses will be computed to evaluate the precision of the analytical results and the important sources of variability. Percent recoveries will be computed for all spikes (including surrogates) to evaluate accuracy of the sampling/analysis protocol. Standard runs will be summarized to estimate analytical accuracy. Blank concentrations will be summarized to estimate sample contamination.

All field sampling forms, sample control forms, and analytical results forms will be reviewed for completeness and unusual comments. All analytical results will be evaluated for reasonableness. For example, a comparison of influent and effluent data from the same time period can be used as a reasonableness check. Any unusual results will be checked back through the analytical laboratory.

*U. S. GOVERNMENT PRINTING OFFICE 1986; 491-191/52938