EPA-R2-73-292a

July 1973

Environmental Protection Technology Series

EXPERIMENTAL COMBUSTOR FOR DEVELOPMENT OF PACKAGE BOILER EMISSION CONTROL TECHNIQUES - PHASE I OF III

American Petroleum Institute
1801 K Street, N.W.
Washington, D.C. 20006

Office of Research and Monitoring
U.S. Environmental Protection Agency
Washington, D.C. 20460

EPA-R2-73-292a

EXPERIMENTAL COMBUSTOR FOR DEVELOPMENT OF PACKAGE BOILER EMISSION CONTROL TECHNIQUES - PHASE I OF III

by

L.J. Muzio and R.P. Wilson, Jr.

Environmental and Applied Science Division
Ultrasystems, Inc.
2400 Michelson Dr.
Irvine, California 92664

Contract No. 68-02-0222
Program Element No. 1A2014

EPA Project Officer: G.B. Martin

Control Systems Laboratory
National Environmental Research Center
Research Triangle Park, North Carolina 27711

Prepared for

AMERICAN PETROLEUM INSTITUTE
1801 K STREET, N.W.
WASHINGTON, D.C. 20006

and

OFFICE OF RESEARCH AND MONITORING
U.S. ENVIRONMENTAL PROTECTION AGENCY
WASHINGTON, D.C. 20460

July 1973

This report has been reviewed by the Environmental Protection Agency and approved for publication. Approval does not signify that the contents necessarily reflect the views and policies of the Agency, nor does mention of trade names or commercial products constitute endorsement or recommendation for use.

ABSTRACT

Harmful emissions from commercial (3-30 x 10^6 Btu/hr) and industrial (30-500 x 10^6 Btu/hr) package boilers are a significant factor in our air pollution problem, contributing 26% of the nitric oxide produced by stationary combustion sources[1]. Evidence indicates that these NO_x emissions are most readily controlled by flame modification, such as flue gas recirculation and staged combustion, rather than attempting to process the stack gases.

In Phase I of the three-phase program, a unique 3.7 x 10^6 Btu/hr oil combustion facility was designed and built to develop NO_x control techniques for small boilers. The facility duplicates the key aspects of the oil flames of representative boilers in the 10^6-10^8 Btu/hr range, and is capable of recycling and injecting any given amount of flue gas or air at unconventional sites on the combustor boundary. The facility is also fully instrumented to measure all flows (air, fuel, flue gas), temperatures along the combustor, and NO_x, CO, O_2, and smoke emissions.

Preliminary tests indicate that emissions from the test combustor (approximately 300 ppm of NO or 4.4 gm NO/Kg fuel), while operating on No. 6 oil, are consistent with emissions from field-tested package boilers operating on No. 6 oil.

TABLE OF CONTENTS

Section		Page
	Abstract	iii
	Summary of Phase I Activities	vi
I.	INTRODUCTION	
	A. Package Boilers as Emissions Sources	1
	B. Some Fundamentals of NOx Formation in Flames	1
	C. Control of NOx by Flame Modification	5
	D. Side Effects of NOx Control	6
	E. Rationale of the 3-Phase Program	8
II.	COMBUSTOR FACILITY	
	A. Summary of Overall Features of the Combustor	10
	B. Burner Furnace and Cooling System	12
	1. Combustor	12
	2. Burner	13
	3. Fuel Supply	13
	4. Convective Section	16
	5. Coolant System	17
	C. Instrumentation and Flame Modification Provisions	18
	1. Air and Flue Gas Distribution System	18
	2. Instrumentation	20
III.	PRELIMINARY SHAKEDOWN AND EMISSIONS TESTING	
	A. System Performance	25
	B. Preliminary Test Results	26
	1. Flame Sampling	26
	2. Emissions Testing with No. 6 Oil	32
IV.	TEST PROGRAM	
	A. General Approach	37
	B. Pollutant Minimization Tests	38
	C. Versatility Tests	42
	D. Plans for Field Testing	43
V.	REFERENCES	44
VI.	TABLE OF CONVERSION FACTORS	45

SUMMARY OF PHASE I ACTIVITIES

Harmful emissions from commercial (3-30 x 10^6 Btu/hr) and industrial (30-500 x 10^6 Btu/hr) package boilers are a significant factor in our air pollution problem, contributing 13% of the nitric oxide produced by all combustion sources and 26% of stationary sources[1]. Typical package units firing heavy oil release nitric oxide in the 100-400 ppm range and particulates in the range 1-4 gpm/kg fuel[2,3]. Yet unlike the mammoth utility boilers which are popular watersheds of public environmental concern, comparatively little attention has been directed to the commercial or industrial size units.

The evidence continues to mount that NO_x is most readily controlled by flame modification rather than attempting to process the stack gases. External flue gas recirculation (adding flue gas to the fresh charge at the burner) and staged combustion (controlling the air/fuel mixing and thus heat release along the combustor) can significantly reduce NO_x in practical combustion systems; on the order of 50% reductions in NO_x have been realized. It is the long range goal of our program to uncover some of the best ways of applying these NO_x reduction techniques to the flames of package boilers: best in the sense of emissions, practical economy of burner/furnace hardware changes, and functional goals such as steam generation and flame stability.

In Phase I of the three phase program a unique oil combustion facility was designed and built especially to serve as a test bed for developing NO_x control techniques for package boilers. Not only does the facility duplicate key aspects of the oil flames representative of boilers in 10^6 - 10^8 Btu/hr range, but unlike these boilers the facility also can perform unusual functions at the experimentor's command. Foremost is the capability of recycling any given amount of flue gas and injecting either this flue gas or a portion of air at unconventional sites on the combustor boundary. The facility is also fully instrumented to measure all flows (air, fuel, flue gas), temperatures along the combustor, and NO_x, CO, O_2 and smoke emissions. All signals are electrical and are collected, scaled, digitized and recorded on magnetic tape by a specially designed data acquisition system. Further, a calorimetric probe has been designed and built which can simultaneously determine the temperature at any

point in the combustor and extract a sample for chemical analysis.

Shakedown tests were completed and the flame related hardware is readily variable over a wide range with excellent control. The following systems are operating as designed:

- modified burner
- combustor thermal and flow instrumentation
- flame probe
- emission sampling and analysis system
- fuel supply systems (No. 6 oil, No. 2 oil, natural gas)
- Dowtherm coolant system
- flue gas recirculation system
- staged air system including rear injection boom

Preliminary tests indicate that the emissions from the combustor (approximately 300 ppm of NO or 4.4 gm NO/Kg fuel) while operating on No. 6 oil are consistent with emissions from field tested package boilers operating on No. 6 oil.

The combustor is presently ready for rigorous testing in Phase II to uncover the optimum techniques of flue gas recirculation and staged combustion to control NO_x emissions. The techniques uncovered during Phase II will then be applied to actual field package boilers during Phase III.

I. INTRODUCTION

A. PACKAGE BOILERS AS EMISSION SOURCES

Harmful emissions from package boilers are a significant factor in our national air-pollution problem, contributing 13% of the nitric oxide produced by all combustion sources, 26% of moving and stationary sources[1]. Package boilers are boilers which can be manufactured at the manufacturer's facility and transported as a package via train to the operating site. The range of operating load is from 3 million to 500 million Btu/hr and these units are used wherever a source of steam is needed; hospitals, schools, industrial plants, large apartment buildings, etc. Typical package units firing heavy oil release nitric oxide in the 1.0 - 15.0 gm NO/kg fuel range, and particulates in the range 1 - 4 gm/kg fuel[2,3]. In Table 1 we present a survey of available results. Yet unlike the mammoth utility boilers which are popular watersheds of public environmental concern, comparatively little attention has been directed to the commercial ($3 - 30 \times 10^6$ Btu/hr) and industrial ($30-500 \times 10^6$ Btu/hr) size units. This uneven distribution of expressed concern has little rational basis. For although these emission rates and the total fuel consumption by commercial and industrial units seem low compared to those of large stationary sources and motor vehicles, these emissions are delivered unavoidably and directly to the near vicinity of schools, small businesses, and hotels with comparatively little chance to disperse before human contact.

B. SOME FUNDAMENTALS OF NO_x FORMATION IN FLAMES

While the exact mechanism for producing NO_x over the entire range of combustion conditions has not been completely defined, the general flame conditions which must exist to form NO_x are reasonably well understood. As most practical combustion systems utilize turbulent diffusion flames, the discussion of NO_x formation will be focused on the processes in this type of flame. Two mechanisms are possible: Thermal Fixation and Fuel-Nitrogen conversion

(a) Thermal Mechanism

The sequence:

TABLE 1

SUMMARY OF EMISSIONS FROM OIL FIRED PACKAGE BOILERS

Ref.	Boiler Type	Burner Type	Rated Output 10^6 Btu/hr	Test Load 10^6 Btu/hr	Fuel	Fuel N % wt	Excess Air %	NO_x gm/Kg Fuel	Particulate gm/Kg Fuel	CO gm/Kg Fuel	HC gm/Kg Fuel
1	Scotch Marine 125 HP	Rotary Cup	5	4	#6	0.44	27	14.2	3.8	0.4	0.05
1	Scotch Marine 150 HP	Air Atomized	6.2	5	#5	0.33	36	8.8	4.7	0.55	0.04
1	Scotch Marine 150 HP		6.2	5	#5	0.16	26	5.7	6.0	0.44	0.04
1	Scotch Marine 150 HP		6.2	5	#5	0.25	19	6.0	2.2	0.43	0.04
1	Scotch Marine 150 HP		6.2	5	#6	0.39	36	10.8	9.5	0.53	0.04
1	Scotch Marine 60 HP	Pressure Atomized	2.8	2.2	#2	0.03	29	1.4			
1	Scotch Marine 350 HP	Air Atomized	14.6	11.7	#4	0.22	23	15.2			
1	Scotch Marine 200 HP	Air Atomized	8.1	7	#4	0.22	27	7.4			
1	Scotch Marine 80 HP	Air Atomized	3.3	2.7	#5	0.21	31	3.1			
4	Cleaver Brooks	Air Atomized	15	10	#6	-	22	6.2	1.5-4.8	0.04	0.15
4	Foster Wheeler (water tube)	Steam Atomized	21	12	#6	-	30	3.1	6.9	0.34	0.04
4	Scotch Marine (Kewance)	Rotary Cup	14.2	9	#6	-	22	2.3	4.6	0.28	0.13
4	Keeler-Water Tube	Pressure Atomized	21	14	#6	-	48	1.5	2.7	0.07	0.02
5	Water Tube	Steam Atomized	23	21	#2	-	58	-			
5	Water Tube	Steam Atomized	30	14.4	#6	-	130	6.0	5.0	1.1	0.03
5	Scotch Marine	Air Atomized	4.2	0.7	#1	-	72	-			
3	Cleaver Brooks	Air Atomized	1.5	1.5	#6	-	10-38	3-6	-	["very low"]	
6	Locomotive Type 120 HP	Steam Atomized	4.8	5.3	PS300	-	68	9.2		-	-
6	Scotch Marine 125 HP	Pressure Atomized	5	3.4	PS300	-	180	5.3		-	-
6	Water Tube 460 HP	Pressure Atomized	18.5	11.8	PS300	-	107	6.1		-	-
6	Water Tube 500 HP	Steam Atomized	20	36	PS300	-	92	7.3		-	-
6	Water Tube 580 HP	Steam Atomized	23	8.5	PS300	-	95	6.0		-	-
6	Water Tube 245 HP	MCL 7-23	9.8	14.7	PS400	-	43	8.3		-	-
6	Water Tube 425 HP	Pressure Atomized	17	23.6	PS400	-	110	8.6		-	-
6	Water Tube 870 HP	Steam Atomized	35	25	PS400	-	73	6.5		-	-
6	Fire Tube 60 HP	Pressure Atomized	2.8	1.3	PS200	-	65	1.2		-	-
6	Water Tube 100 HP	Pressure Atomized	4	0.9	PS200	-	290	2.1		-	-
6	Scotch Marine 200 HP	Centrifugal Atomized	8.1	3.1	Diesel	-	210	1		-	-
6	Water Tube 200 HP	Pressure Atomized	8.1	1.4	Diesel	-	370	4		-	-
6	Water Tube 300 HP	Centrifugal Atomized	12	3.4	PS200	-	115	1.1		-	-
6	Fire Tube 300 HP	Steam Atomized	12	5.8	PS200	-	220	0.7		-	-
6	Scotch Marine 350 HP	Centrifugal Atomized	14.6	12.5	Diesel	-	94	2.1		-	-
7	Scotch Marine 40 HP	-	1.6	-	#2	-	26	1.2		-	-
7	Scotch Marine 90 HP	-	3.7	-	#2	-	30	1.5			
7	Scotch Marine 90 HP	-	3.7	-	#4	-	25	4.8			
7	Scotch Marine 300 HP	-	12	-	#2	-	27	1.4			
7	Scotch Marine 300 HP	-	12	-	#6	-	30	4.9			
7	Scotch Marine 80 HP	-	3.3	-	#2	-	26	2			
7	Scotch Marine 80 HP	-	3.3	-	#5	-	30	5.7			
7	Scotch Marine 100 HP	-	4	-	#2	-	26	2.4			
7	Scotch Marine 100 HP	-	4	-	#6	-	31	5.7			
7	Scotch Marine 600 HP	-	28	-	#2	-	25	2.4			
7	Scotch Marine 600 HP	-	28	-	#6	-	27	5.1			

SUMMARY OF EMISSIONS FROM GAS FIRED PACKAGE BOILERS

Ref.	Boiler Type	Burner Type	Rated Output 10^6 Btu/hr	Test Load 10^6 Btu/hr	Excess Air %	NO_x gm/Kg Fuel	Particulate gm/Kg Fuel	CO gm/Kg Fuel	HC gm/Kg Fuel
5	Fire Tube	Premix	7.2	9.3	>>100	3.2	0.5	0.3	0.07
5	Scotch Marine	Premix	4.2	0.98	85	3.7	0.8	70	1.9
8	Superior	Slit	6	6	22	2.0	-	-	-
6	Tubeless 30 HP	Premix	1.4	0.88	98	1.04	-	-	-
6	Fire Tube 60 HP	Nozzle Mix	2.8	2.14	93	1.1		-	-
6	Scotch Marine 150 HP	Multijet Ring	6.2	7.6	13	0.5		-	-
6	Scotch Marine 200 HP	Multijet Ring	8.1	4.5	94	0.4		-	-
6	Water Tube 200 HP	Multijet Ring	8.1	2.6	135	0.6			
6	Water Tube 245 HP	4 Segment	9.8	14.8(?)	16	0.23			
6	Water Tube 300 HP	Ring	12	5.1	13	0.68			
6	Fire Tube 300 HP	Multijet	12	6.4	124	1.2			
6	Scotch Marine 350 HP	Multijet Ring	14.6	11.3	72	1.5			
6	Water Tube 425 HP	Multijet Nozzle Mix	17	25.8	48	2.6			
6	Water Tube 460 HP	Multijet Ring	18.5	16.2	85	1.2			
6	Water Tube 500 HP	Multijet Nozzle Mix	20	30	84	3.6			
6	Water Tube 580 HP	Multijet Ring	23	11.6	0	1.45			
6	Water Tube 870 HP	Multijet Ring	35	25	73	3.5			
1	Scotch Marine 60 HP		2.8	1.9	17	0.7			
7	Scotch Marine 40 HP		1.6	-	27	1.6			
7	Scotch Marine 90 HP		3.7	-	16	1.7			
7	Scotch Marine 300 HP		12	-	16	2.1			
7	Scotch Marine 80 HP		3.3	-	17	8.8			
7	Scotch Marine 100 HP		4	-	16	1.2			
7	Scotch Marine 600 HP		28	-	15	1.8			

$$O_2 + M \rightleftarrows O + O + M \quad (1)$$

$$O + N_2 \xrightarrow[\text{slow}]{} NO + N \quad (2)$$

$$N + O_2 \rightarrow NO + O \quad (3)$$

which produces thermal NO_x is painfully sensitive to temperature excursions above the 3000°F mark. The adiabatic flame temperature for oil/air flames at 8% excess air is 3600°F; natural gas flames fall in the same general range. For every additional 100°F, the NO production jumps about a factor of 3 . It is this thermal on/off switch, caused by the large activation energy of reaction (2), which controls the overall sequence. These thermo-chemical facts of life amount to one thing--an NO_x disaster occurs whenever near-adiabatic conditions are produced unless very rapid quenching follows.

In addition, typical combustor residence times are short compared to the time to reach equilibrium and therefore the absolute values of NO_x measured in combustors are about an order of magnitude below equilibrium values (see Figure 1) at flame temperature.

(b) Fuel-Nitrogen Mechanism

This mechanism occurs during oil combustion where nitrogen atoms can become available by liberation of nitrogen organically bound in the fuel molecules. Even though the amount of chemically bound nitrogen in oil is small, on the order of 0.05% for a distillate No. 2 fuel oil and 0.4% for a No. 6 residual oil, it is comparable to the concentration of NO formed and can be the controlling factor in some oil-fired units. This effect is clearly shown in Figure 2 where sampling by Battelle of the NO_x emissions from a commercial boiler operating at 80% load are plotted as a function of fuel nitrogen content[1]. At present little is known about the detailed mechanism of fuel bound nitrogen conversion to NO. Limited experimental studies have shown that approximately 40% of the fuel bound nitrogen is converted to NO in package boiler type combustors.*

*The actual conversion fraction depends on the operating conditions of the combustor, load, excess air, etc.

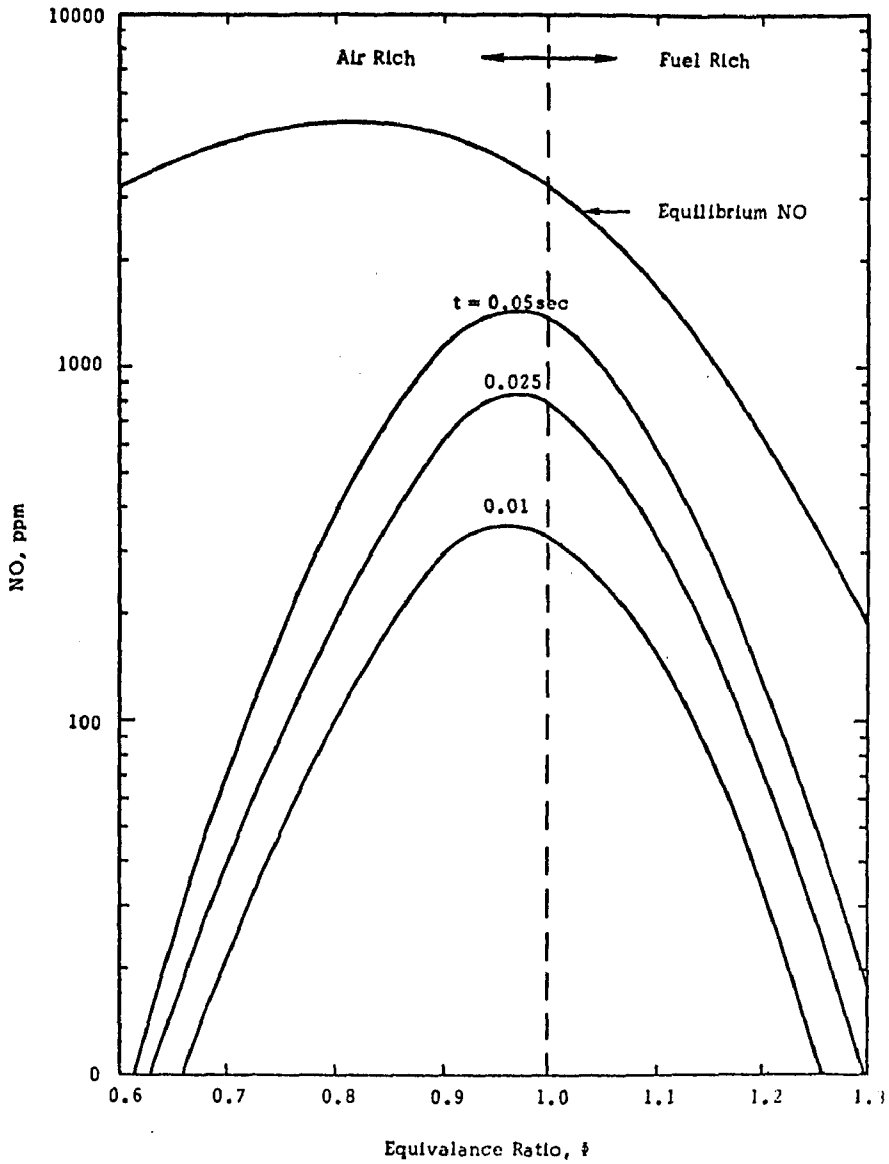

Figure 1.

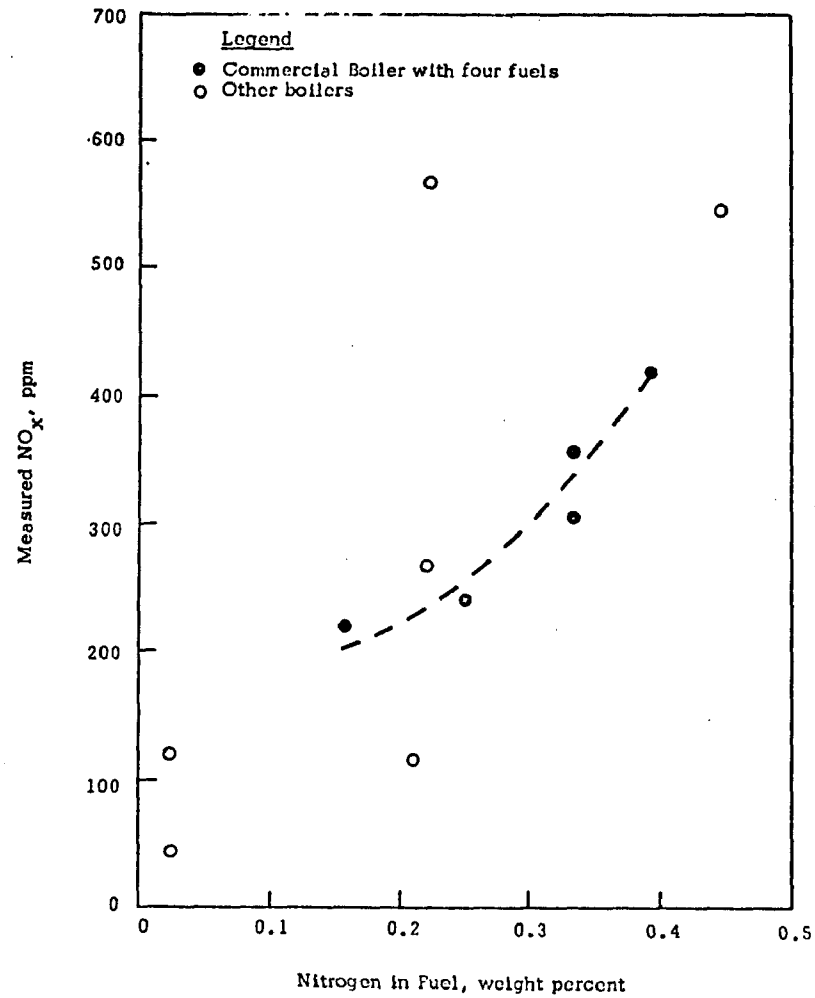

Figure 2.

C. CONTROL OF NO_x BY FLAME MODIFICATION

Both pollutants can be kept low if (1) peak temperatures which otherwise enhance $(NO)_x$ production are avoided and if (2) hot fuel-rich zones are avoided to minimize smoke particle production. Two stage combustion (SC) may be used to delay heat release, dissolve spatial temperature peaks and reduce oxygen availability, thus reducing NO_x. Recirculated flue gas (ER), acts as a thermal ballast to dilute reactants and thereby hold temperatures down, with a subsequent suppression of NO_x.

Some experience has been gained in applying flue gas recirculation and staged combustion to practical combustion systems. In practice, flue gas recirculation cuts nitric oxide emissions significantly. For example, in tests conducted by Martin and Berkau, approximately 22% NO_x reduction was obtained on a laboratory combustor fired with a distillate fuel doped with 1% pyridine, while 85% reductions were realized with the distillate fuel alone[9]. Turner and Siegmund obtained approximately 33% reduction in NO_x in a 50 hp Cleaver Brooks boiler fired with a residual fuel oil[10]. A theoretical predicting assuming a perfectly homogeneous distribution of flue gas into the reacting gases indicate an NO_x reduction of 99%. The difference is attributed to mixing effects and fuel nitrogen which were omitted from the theoretical prediction. In order for ER to be effective, the flue gas must be intimately mixed with the incoming air.

The effects of staged combustion on the NO_x emissions cannot be predicted without a rigorous theory for air entrainment into the oil-spray combustion zone. However, empirical results have been gathered for oil-fired boilers in the 10^9 Btu/hr range[9,10,11], and for a coal-fired test furnace[12]. In the former case, a corner fired unit was operated with one burner tier supplied with air only (25% of stoichiometric requirement) thus forcing the other burner tiers to operate fuel rich (85% of stoichiometric air requirement). In this manner, NO_x reductions of 30-40% were observed at 10% excess air.

Barnhard's results are similar[11]: with 95% of stoichiometric air through the burners and 15% through auxiliary "overfire" ports, NO_x was reduced 27%. When these fractions were shifted to 90%-20%, the reduction increased to 47%.

Selective secondary-air distribution was used by Bienstock, et al.[12] to reduce NO_x by 62% on pulverized-coal fired tests. It was found essential to preheat the downstream air to 1940°F in order to avoid quenching the flame in such a small furnace (rating $\approx .4 \times 10^6$ BTU/hr).

D. SIDE EFFECTS OF NO_x CONTROL

Controlling NO_x with flue gas recirculation or staged comes not without a penalty. There are a number of factors which must be considered in the application of a particular control technique. Exhaust gas recirculation may result in condensation in the lines with associated corrosion problems; flame stability problems may arise.

When staged combustion is employed to control NO_x problems of heat distribution throughout the combustor may prove itself to be a culprit. Another potential problem source may be the complexity of the system required to meter the air to the required points within the combustor.

In addition, reducing NO_x must not result in unacceptable increases in the emissions of carbon monoxide, hydrocarbons or particulates. Due to the reduced temperatures encountered during ER applications, smoke and CO may appear due to the retardation of the oxidation reactions which are exponentially dependent on temperature. During staged combustion one must be certain that the smoke formed in the fuel-rich primary zone is oxidized durther downstream in the combustor. The real challenge then is to exploit these two techniques without interrupting the necessary fuel/air oxidation sequence. To reduce NO_x the flame must be cooled and the oxygen availability reduced without triggering soot-forming reactions which produce slow-burning solid carbon.

Thus, oil combustion with minimum air pollution inevitably is a tradeoff in design and operating configurations. This dichotomy was clear from the work of Wasser, et al., on oil-fired furnace emissions. Particulate, CO, and NO_x emissions are superimposed in Figure 3 to illustrate the tradeoff involved.

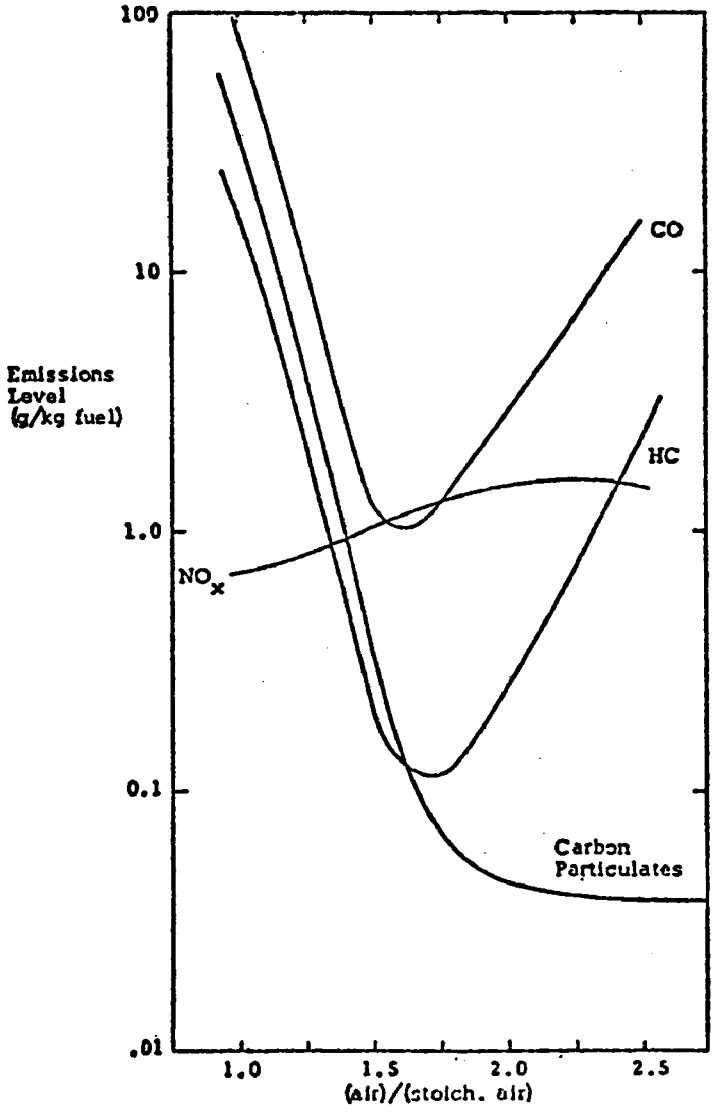

Figure 3.

Emissions Tradeoff

E. RATIONALE OF THE 3-PHASE PROGRAM

The evidence continues to mount that external flue gas recirculation (ER) and staged combustion (SC) can reduce NO_x significantly in practical combustion equipment. It is the long-range goal of our program to uncover some of the best ways of applying these NO_x-reduction techniques to the flames of packaged boilers . . . best in the sense of emissions, best in the sense of practical economy of burner/furnace hardware changes, and best in the sense of functional goals such as steam generation and flame stability.

Unlike abatement of emissions from motor vehicles and utility sources, which may require modifications amounting to 10-20% of capital costs, with package boilers the opportunity exists to make marked abatement progress without severe sacrifice. Some 800 water-tube and 11,000 fire-tube boilers are installed yearly in the United States[13] and many others are refitted with components intended to improve air/fuel mixing. The mixing hardware represents a small fraction of the total cost of package boilers; the major share going to the furnace, water/steam handling system, air blower, fuel pump, and associated controls. Furthermore, the initial capital cost of a package boiler is only about 5% of the operating costs (primarily for fuel) over the boiler lifetime[14]. Thus, modifications to the mixing hardware which cost a fraction of 1% of the total boiler costs (capital plus operating) over the years are reasonable.

Let us define more carefully the scope of the program. In seeking hardware changes which minimize emissions, there is considerably more latitude in developing a fresh redesign intended for new units, than in searching for a simple modification that can be made in the field to convert existing boilers. The larger, expensive water-tube units with high output and high NO_x level are suitable for field modification. The smaller fire-tube units could be practically modified only if the changes were quite simple; and, since some 11-12,000 are sold each year, they invite a complete redesign. To the extent that increasing hardware changes may lead to ever lower emissions, it makes sense to find <u>both:</u>

(i) a simple modification suitable for field conversion, and

(ii) an exhaustive redesign to guide the manufacture of new units

The range of improvement sought is 50-80%.

Essentially, there are two sequential activities in developing a new hardware concept to where it is acceptable to industry - an exploratory activity to uncover promising concepts, and a rigorous field-testing activity to establish the long-term operating validity of the concept. The former calls for experimental inventiveness and disciplined mathematical modeling; the latter calls for engineering and manufacturing experience with problems encountered in the field.

To make the search for optimum ER and SC configurations easier, an experimental facility was needed, and the activities of Phase I were directed to satisfy this need. The goal was a versatile simulated package boiler which provides the experimenter with a selection of air/flue-gas injection options, and allows him to exercise each of these options (or combinations thereof) over a continuous range while the burner is firing. Furthermore, sensors or monitors were to be provided so that the experimenter can keep close quantitative track of operational parameters and of how well the injection scheme is working to reduce emissions. This document describes an experimental facility which meets these goals.

II. COMBUSTOR FACILITY

A. SUMMARY OF OVERALL FEATURES OF THE COMBUSTOR

The objective of Phase I was to bring into existence a unique oil-combustion facility. In order to generate applicable NO_x-control techniques for package boilers, a rather schizophrenic combustor was conceived and built: To the boiler manufacturer, the flame had to be of authentic shape and simulate the heat transfer characteristics found in package boilers. To the combustion experimentalist, the flame had to be a highly controlled and instrumented system with options for modifying the flame at will. Foremost was the capability of recycling any given amount of flue gas and injecting either this flue gas or a portion of air at unconventional sites on the combustor boundary. No existing package boiler in the 20 gal/hr range was nearly versatile enough without overwhelming modifications; a specially designed furnace combustor was built to meet these specifications. All of the flame-related hardware is readily variable over a wide range and with good control, fuel flow, air flow and distribution, staged air, flue gas recirculation. Both the flame and emissions are measurable at any point. Furthermore, the combustion system gives a reproducible and stable flame with consistent emissions behavior.

Given the wide assortment of oil-fired package boilers scattered around the United States, pollutant minimization is best carried out on a single representative unit. In selecting the size of this unit, it makes sense to work on as small a scale as practicable. Although full-scale testing on units in the 10^8 BTU/hr range will ultimately be necessary to demonstrate the effectiveness of ER/SC modification, these modifications are most quickly located and efficiently developed in subscale combustor tests. Lab-scale devices give the opportunity for relatively straightforward experiments, encouraging inventiveness and discovery.

In designing the test facility, attention was paid to providing three commodities: authenticity, versatility, and data-gathering efficiency. Without moving the design away from that of a typical package boiler, an effort has been made to include as many options as possible to the experimenter, both in standard parameters (e.g., fuel type, atomization type, load) and especially in the modes of external flue-gas recirculation and staged combustion.

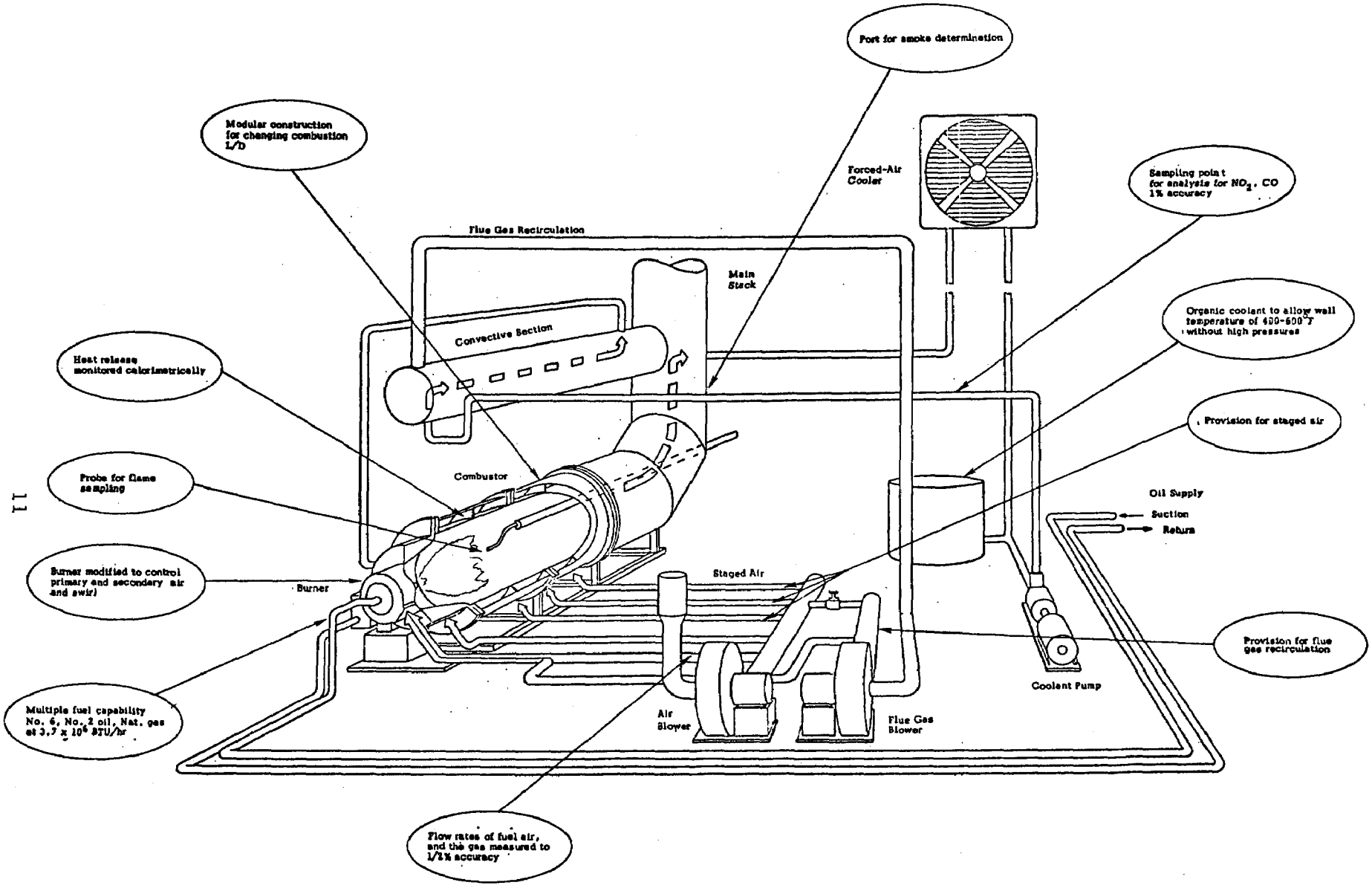

Figure 4.

Diagram of Experimental Combustor

NOMINAL SPECIFICATION

Load: 3.7×10^6 Btu/hr

Combustion Intensity: 1.7×10^5 Btu/hr ft^3

Combustor L/D: 3.9

Wall Temperatures: 450^oF

Fuel: No. 6 Oil, No. 2 Oil or Natural Gas

The overall combustor system is shown in Figure 4.

B. BURNER FURNACE AND COOLING SYSTEM

1. Combustor

The basic furnace is a cylinder of inside diameter 23"and length 90", giving a volume of 21.6 ft^3 and L/D $\approx$ 4. A sketch of the furnace is shown in Figure 5. The reader may wish to refer to complete engineering drawings of the combustor and convective section (Appendix A) of the reference report[15].

The furnace is composed of three cylindrical modules each of 30" length; this presents the option of changing both volume and L/D merely by removing one furnace module. In addition, an 11" throat module connects burner to furnace and provides a portion of the refractory burner cone.

Downstream of the throat, the walls of the three furnace modules are to be cooled to 400-450^oF, and are constructed of steel. Refractory may be added to the furnace as a cylindrical insert.

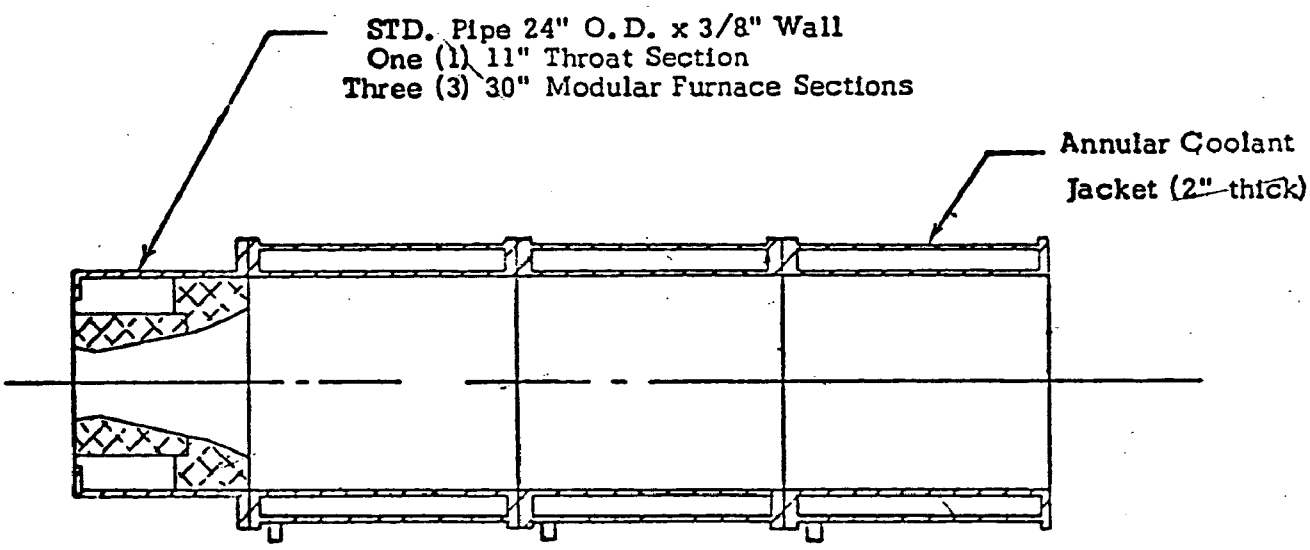

Figure 5.

2. Burner

A commercial 90 HP, dual-fired burner was selected as the skeleton for a research burner. Designed for application in multi-pass scotch marine, water tube, or firebox boilers, the burner is set up for low-pressure atomization of oil and forced-draft operation. Extensive shopping was done before selection of the burner as the burner is significantly more critical to NO_x formation than the combustor section. The specifications are as follows:

Manufacturer	Ray
Model	AECR-144
Size	90 HP
Nominal load	3.7×10^6 Btu/hr (25.1 gph or 3766 CFH)
Fuel	Heavy oil or natural gas
Fuel gas pressure	1.5" w.c. at burner inlet 2.7" w.c. at valve inlet
Atomization	Air, low pressure (15-20 psi)
Oil viscosity	200 SSF at pump 20 SSF at nozzle
Oil heaters	3 KW plus tailpiece
Stock blower	3 HP, 800 scfm
Oil pump	Two stage, gear driven

The adaptation of this burner to a configuration amenable for research included the following changes:

(i) Physical separation of primary and secondary air supplies for independent metering.

(ii) Provision for variable swirl rate.

(iii) Provision for variable fuel/air ratio independent of load.

(iv) Replacing the stock blower with a higher pressure unit capable of distributing air to downstream injectors.

(v) Insertion of precision flow metering devices for fuel and air.

A sketch of the modified burner is shown in Figure 6.

3. Fuel Supply Systems

The fuel supply design was based on burner specifications and manufacturer recommendations for the Ray Burner Model AECR-144. Separate

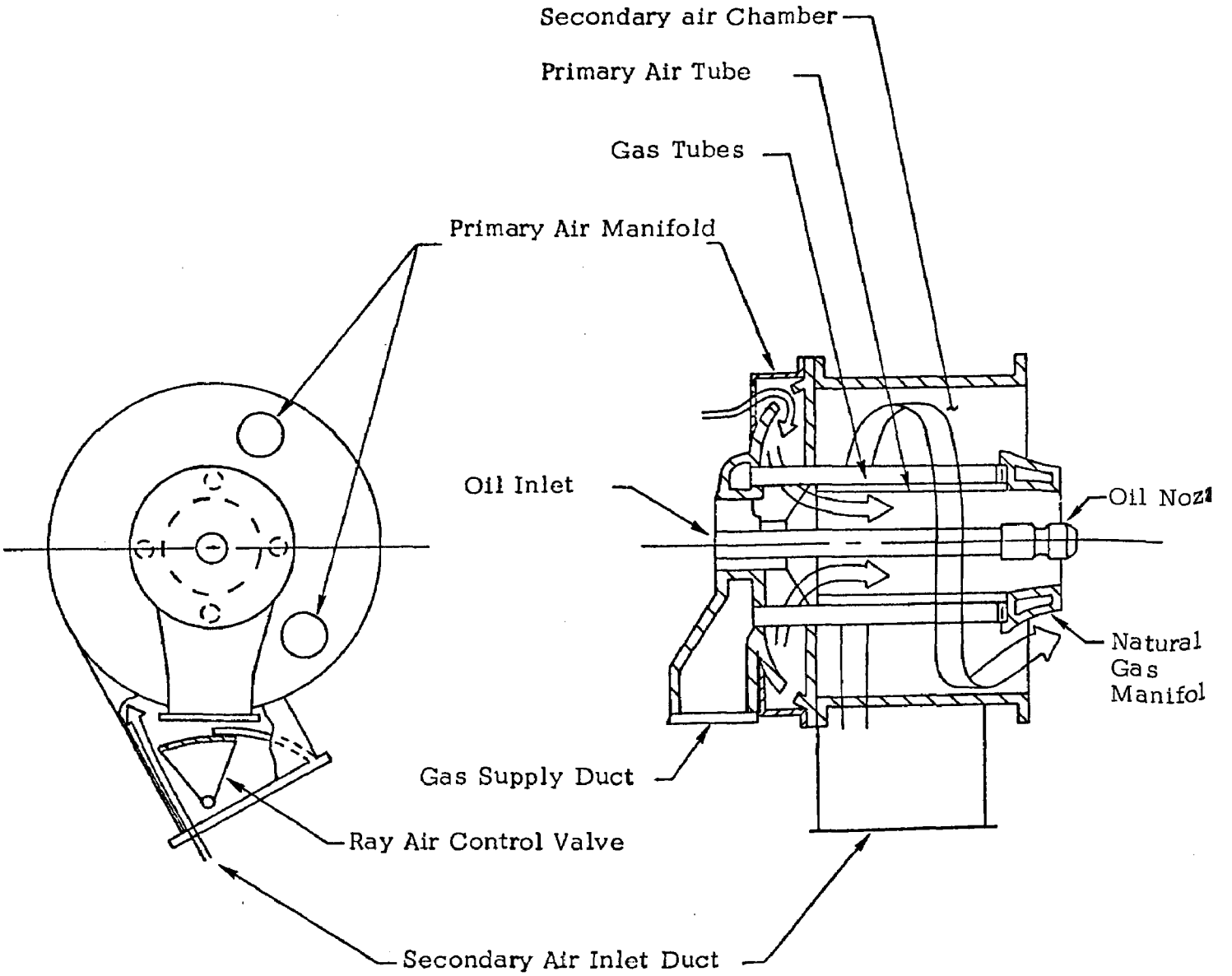

Figure 6.
Modified Burner

systems have been developed for natural gas and No. 6 oil and No. 2 oil. Details are given in the reference report.[15]

No. 6 Oil

The supply system for No. 6 fuel oil is designed to preheat the oil to 120°F at the inlet to the burner pump. The burner itself is equipped with an additional oil heater to raise the oil temperature up to 200°F prior to atomization.

Two underground storage tanks, each of 9940-gallon capacity, were installed. Either tank can be tapped, and a "hot well" is set up within the tank by returning hot oil to the vicinity of the suction inlet.

A uniform supply of oil to be used for the test program was carefully selected by the API representatives. Characteristics of this oil are given below:

Gravity, °API	16.7
Flash Point, PMCC, °F	265
Pour Point, °F	80
Viscosity, SSF at 122°F, sec	97
Heat of Combustion, gross, Btu/lb	17,740
Water and Sediment, %	0.08
Ash, %	0.02
Sulfur, %	0.42
Nitrogen, Kjeldahl, %	0.36
Carbon, %	87.68
Hydrogen, %	11.61

Composition is as reported by Schwarzkopf Microanalytical; the margin of error is ± .02%. Other properties are taken from Union Oil test results.

No. 2 Oil

In addition to operation on No. 6 oil the burner may also operate on a No. 2 distillate oil. During operation on No. 2 oil the No. 6 fuel supply system is bypassed and the No. 2 oil is fed to the burner from 55-gallon drums.

An adequate supply of No. 2 oil from the same base stock as the No. 6 oil was obtained for use throughout the test program. An analysis of the oil is given below:

Carbon, %	86.21
Hydrogen, %	12.68
Sulfur, %	0.24
Nitrogen, Kjeldahl %	0.05

4. Convective Section

The convective section is shown schematically in Figure 7. It is designed to cool up to 40% of the combustion gases at full load from the 1800°F combustor exit temperature to a flue temperature of approximately 400°F. Based on overall design criteria which included heat transfer characteristics, economics and ease of operation and maintenance, a shell-and-tube heat exchanger with one tube pass was selected as the final heat exchanger design configuration. The flue gas enters the tube side of the heat exchanger and is cooled by counterflowing Dowtherm "G" coolant. The liquid Dowtherm is circulated around the tubes by baffles on the shell side of the heat exchanger.

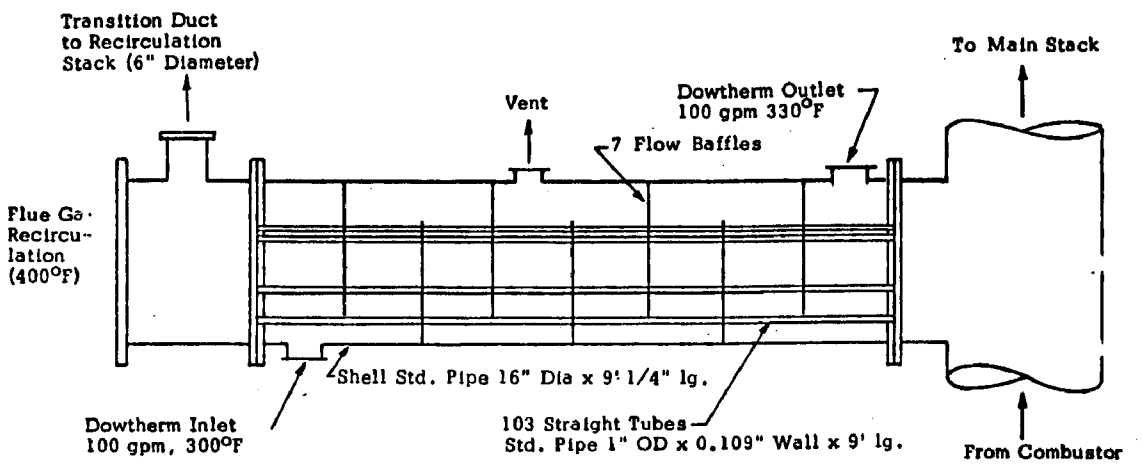

Figure 7. Convective Section

5 Coolant System

During burner operation the coolant distribution system provides a continuous flow of liquid coolant to the flue gas convective section and to the combustor wall cooling jacket. Dowtherm was selected as the working fluid to avoid the high pressures associated with 400-500°F wall temperature when water is used. The heat exchanger components of the cooling system are connected in series with a bypass around the heat sink to control fluid temperature. Dowtherm G, a new liquid phase heat transfer fluid* designed for use between 0-650°F is particularly suited to the present application. It is the most stable low pressure, liquid phase heat transfer fluid available. This stability minimizes the problems resulting from accidental overheating caused by flame impingement, improper firing of the heater, and inadequate circulation. Start-up and shut-down problems are minimized by this fluid's excellent flow characteristics at low temperatures. Dowtherm G remains a liquid and is easily pumped at temperatures down to 0°F. This solves many of the problems of start-up and shut-down and eliminates the need for steam tracing.

The nominal coolant flow rate is approximately 100 gpm. Resistance temperature detectors (RTD's) are located at nine key points in the system to continuously monitor the heat load. At design conditions, the heated Dowtherm is cooled from 390°F at the cooling jacket exit to 300°F by a standard forced-air heat exchanger.

---

* Patent Pending

C. INSTRUMENTATION AND FLAME MODIFICATION PROVISIONS

1. Air and Flue Gas Distribution System

The overall distribution system is presented in schematic form in Figure 8. Basically, eight supply points are fed from two reservoirs of air and flue gas which are at elevated pressure (1 psi) due to centrifugal blowers.

The eight supply points include seven injection points for air, and five for flue gas:

	Provision for flue gas	Provision for air	Symbol
(i) Burner primary	x	x	P
(ii) Burner gas-ports	x		G
(iii) Burner secondary	x	x	S
(iv) Throat injectors	x	x	T
(v)-(vii) Sidewall injectors		xxx	W_1, W_2, W_3
(viii) Axial injection from rear		x	R

The air distribution manifold is designed to deliver combustion air (flow rate controlled) from the blower outlet to the burner/furnace inlets described in the above options. The original blower supplied air at $\sim$ 6-7" H_2O. Because of the extensive piping and valve/flowmeter requirements, the blower size was increased to supply approximately 1000 cfm of air at 1-lb pressure.

The flue gas manifold will recirculate exhaust gases to various supply points. The flue gas fan will circulate up to 500 cfm of gas and compensate for a 1 lb pressure drop through the supply lines.

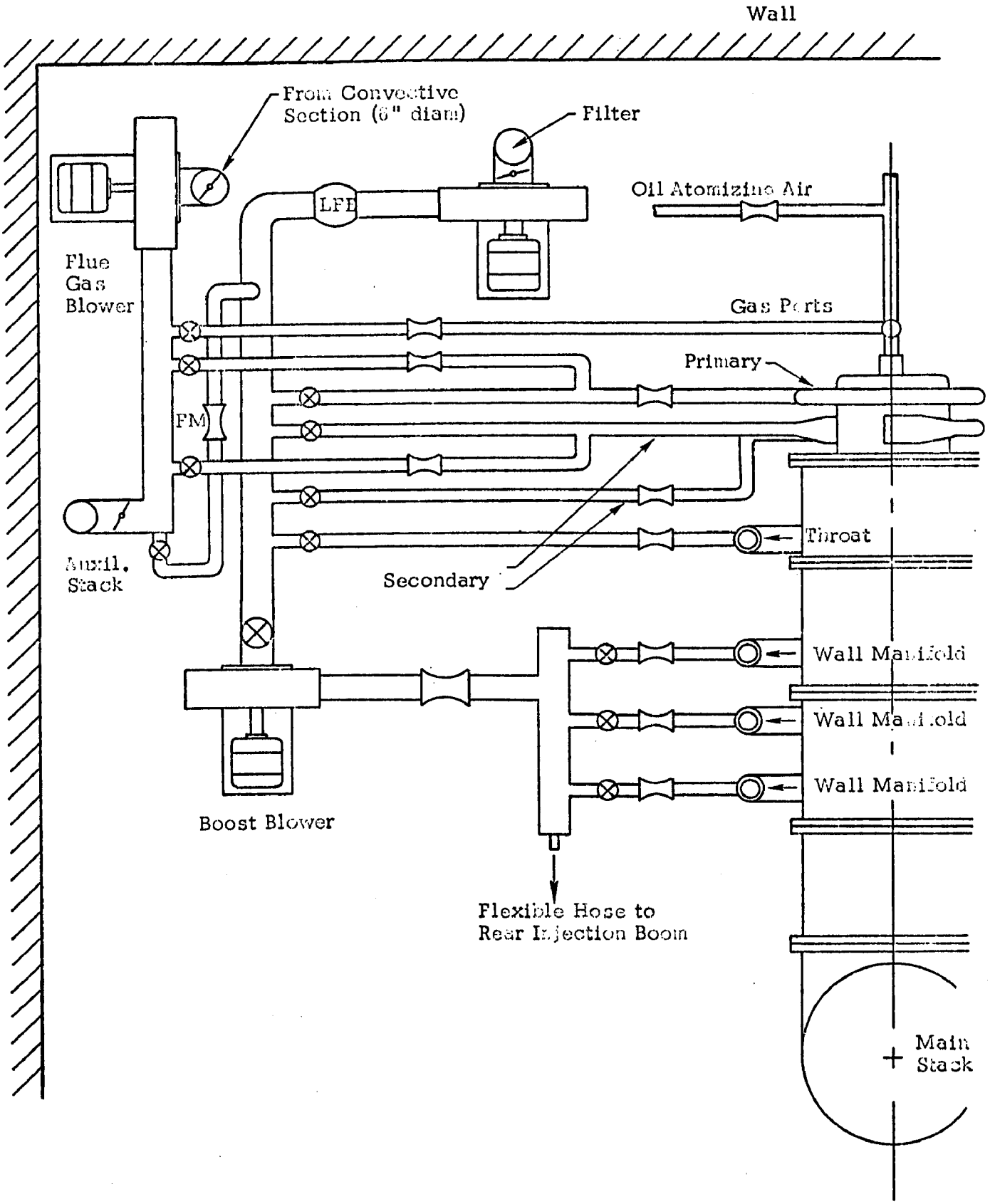

Figure 8. Air and Flue Gas Distribution System.

2. Instrumentation

Summary of Instrumentation

Basically there are four classes of sensors used in the experimental facility:

(i) Air, fuel, and coolant flow rates sensed by differential pressure or turbines

(ii) Temperature sensors for air, flue gas, oil, and coolant

(iii) Emissions analyzers for O_2, CO, NO_x, and smoke

(iv) Calorimetric sensors for aspirating probe

These sensors constitute some 25 channels of data to be recorded for each run. A data logger has been designed to collect, condition, digitize, and store all data upon command from the experimenter, or at preprogrammed intervals. A complete scan is possible within 30 seconds, liberating the test engineer from tedious and time consuming interpolations and chart readings. A second benefit accrues later when the data is to be displayed or manipulated, because the computer can digest the data stored on 1/2" tape. The ranges and accuracy of all sensors is given in table 2.

In addition to monitoring the combustor input-output variable, a double-jacketed calorimetric probe has been developed specifically for boiler flame sampling and manufactured by the Calprobe Company. The probe is shown schematically in Figure 9.

The cooled probe is inserted through the end wall and traverses the flame through various axial and radial positions. This can be done in the flame environment which is characterized by turbulent, low speed, oxidizing flow at 1-atm pressure and up to 3500°F mean temperature. The heat flux to an exposed surface is approximately 0.3 Btu/in^2-sec for an oil flame. Obviously, in the near field of the burner, where heavy concentration of oil droplets exist, the probe may be expected to aspirate droplets.

TABLE 2

SUMMARY OF INSTRUMENTATION

Chan. No.	Display Range	Description of Sensor
1	0 to 1 PSID	Gas flow rates: full scale signal of interest = 0.6PSID supplied by Dynascience* P90D diff. press. transducer and CD10 Signal Conditioner in conjunction with a differential pressure scanning valve; 12 points.
2	0 to 1000 PPM	CO level, Beckman* 315B on 0-500 PPM Range.
3	0 to .100 lb/min	Probe gas flow (Thermosystem Mass Flowmeter Model 1352-3G)
4	0 to 1000 PPM	NO level, Spectra Systems* on 0-300 PPM Range.
5-11	0 to 1000°F	Coolant temp. (platinum RTD, repeatable to 2.5°F). (Measures 100-500°F).
12	0 to 1000°F	Oil temp. (platinum RTD), ±1°F repeatability. (Measures 190-230°F).
13	0 to 100°F	Air temp. (platinum RTD), ±2°F acc. (Measures 50-100°F)
14	0 to 1000°F	Flue temp. (platinum RTD), ±5°F acc. (300-500°F).
15	0 to 1000°F	Probe gas temp. (CU-CO thermocouple), ±5°F acc. (200-400°F).
16	0 to 2000°F	Exit gas temp., (chrome alumuel thermocouple). (Measures 1000-2000°F).
17	0 to 100°F ΔT	Probe water ΔT (CU-CO thermocouples) (Measures 10-60°F).
18	0 to 10%	O2 Level (Beckman* 715 on 0-25% range and Taylor Servomex OA256 on 0-10% range).
19	0 to 10 ft	Potentiometer, boom position z. (0-10 ft).
20	0 to 1000° angle	Potentiometer, boom orientation θ. (0-160°).
21	0 to 1000mg/m^3	Smoke meter (±5% or 10mg/m^3 Resolution ok). Typical range 50-500 mg/m^3.
22	0 to .1 GPM	Probe Water Flow. (Cox LFG-0 turbine flowmeter).
23	0 to 0.5 GPM	Oil Flow (Cox LFG-0 turbine flowmeter).
24	0 to 100 GPM	Coolant Flow. (Potter 2-5426 turbine flowmeter).
25-30	Spare	
	0-9	Smoke (Bacharach smoke tester).

*Mention of specific manufacturer does not constitute endorsement by Ultrasystems or by the program sponsors.

The temperature of the gas as it enters the probe is deduced from how much the gas heats up the coolant before leaving the probe.

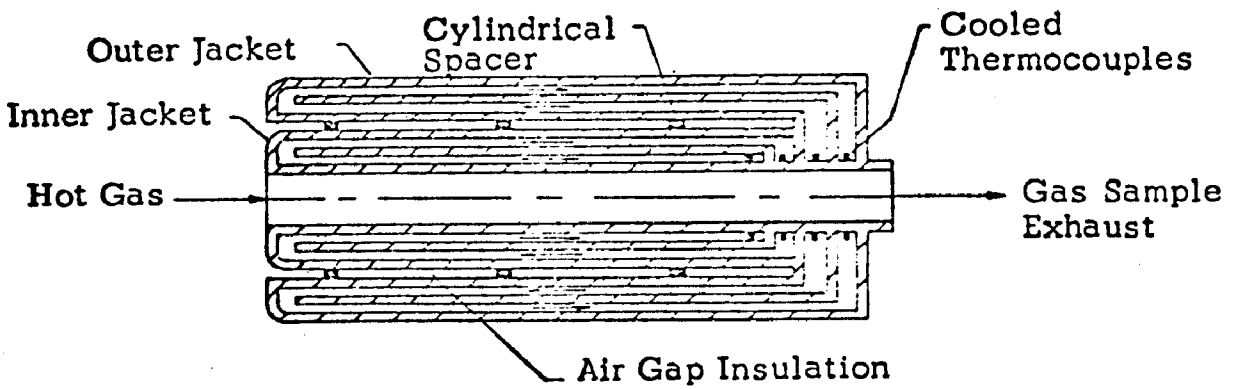

Figure 9. Calprobe Double-Jacketed Probe (3/8" diameter)

The spatial resolution of the temperature measurement is on the order of 10-probe diameters. The time response of the system is set by the flow rates of coolant and aspirated gas, and is about 5 sec. Clearly the fluctuations in temperature will be averaged out, giving the mean temperature $\overline{T}$. Accuracy is $\pm$ 2% or about $\pm$ 60°F.

Emissions Measuring System

Samples taken from the flame through the flame probe as well as from the downstream exhaust gas will be analyzed for CO, NO_x, and O_2. Thus the profiles of mean concentration, $\overline{Y}_i$ (r,z) (where i = CO, NO, and O_2), are established for the same spatial locations as the flame temperature measurements. In particular, it will be of interest to correlate local temperature with local $\overline{Y}_{NO}$, and to probe large eddy structures for unusual pollution-formation behavior.

As shown in Figure 10, sample conditioning includes water separation, filters, dryers, flow meters, and a diaphragm pump which produces the desired flow.

The following instruments are used to analyze for specific gases:

NO_x:	Chemiluminescent, modified EPA design
CO:	NDIR, Beckman #315A
O_2:	Polarographic, Beckman #715 Paramagnetic, Taylor Servomex 0A250
Particulates:	Beta filter
Smoke:	Bacharach smoke tester

The response time is in all cases dependent on the sampling system, so that with a reasonably short sampling time the response times will be from 20 to 40 seconds.

The accuracy of all instruments is normally $\pm$ 1% of full scale and the sensitivity as high as $\pm$ 0.5% of full scale. With a Beckman NDIR 315A, sensitized to 500 ppm CO full scale it is thus possible to determine 100 ppm of CO with an accuracy of $\pm$ 5% of that value ($\pm$ 5 ppm).

The determination of possibly low NO levels (10-50 ppm) will be quite feasible using a chemiluminescent detector. It appears to be the best of all continuous read-out methods and it should at least provide for a good indication of the low pollutant levels achieved.

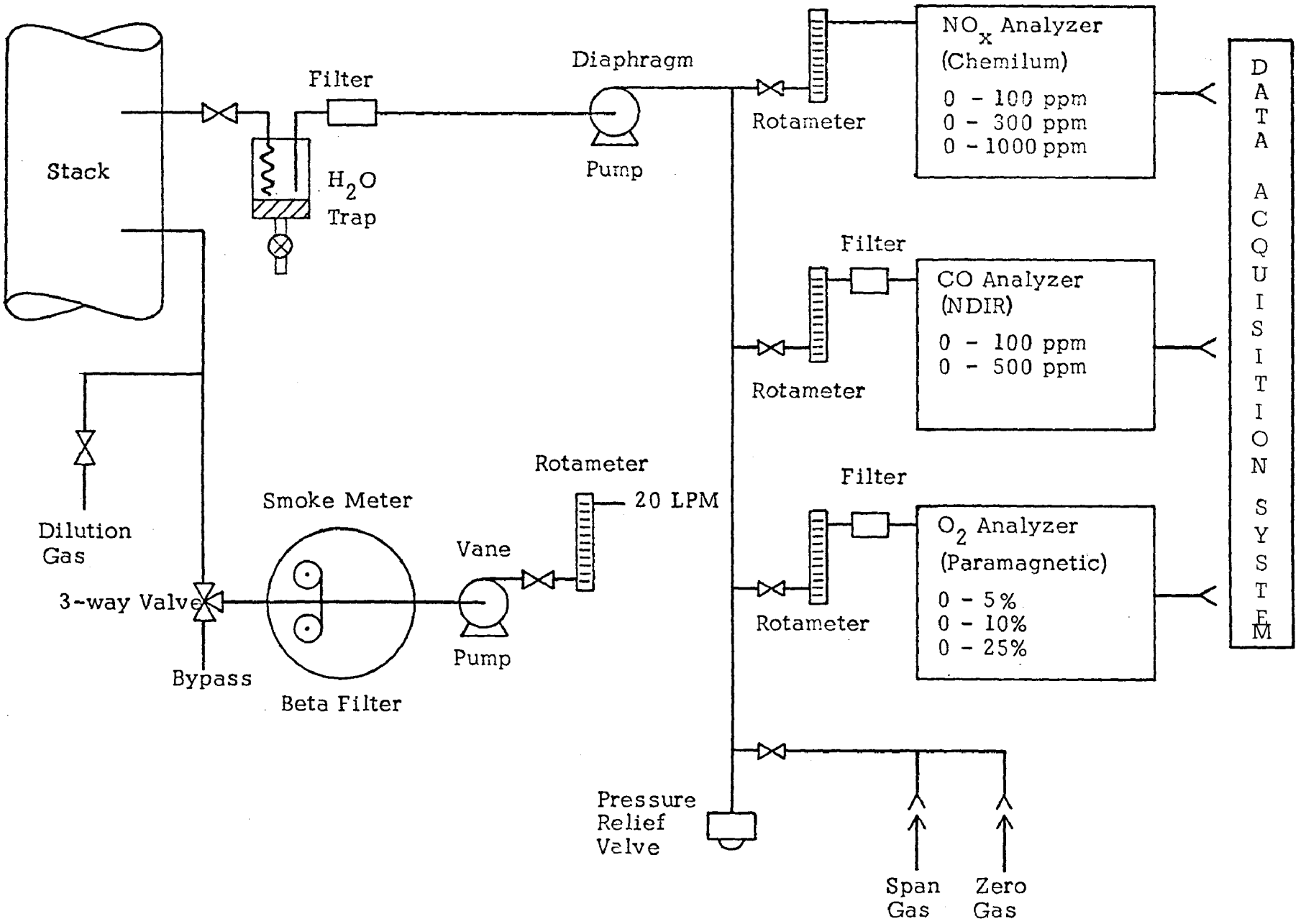

Figure 10.
Emissions Measuring System

III. PRELIMINARY SHAKEDOWN AND EMISSIONS TESTING

A. System Performance

The combustor, air distribution, burner, fuel supply, coolant and flue gas recirculation systems were inspected and operated in a series of shakedown tests. All systems were found to be operating satisfactorily and within the design specifications. Specific details of the shakedown and performance tests are given in the reference report and the results of the system performance is tabulated below:

Load: 20 - 150% rated

Performance at Full Load (3.7×10^6 Btu/hr)

Excess Air	Up to 75%
Primary Air/Total Air	20-80%
Oil Temperature	Up to 200°F
Atomization Air Pressure	10-20 psi
Flue Gas Recirculation*	0-40%
Rear Injection Staged Air/ Total Air	0-50% @ 17% excess Air
Sidwall Injector Air/Total Air	0-50% @ 17% excess Air
Coolant Temperature Rise Along Combustor	≈50°F

*Amount of recirculation is defined as

$$R = \frac{\text{(mass rate of recirculated products)}}{\text{(mass rate of fuel + air)}}$$

B. Preliminary Test Results

1. Preliminary Flame Sampling

The flame sampling probe has been successfully operated in the combustor with both gas and oil firing. During these tests, observations were made of probe coolant flowrates, probe clogging, coolant leaks, excessive probe vibration, and excessive probe heating. It should be noted that during these tests the burner was in an interim stage of development with a swirl vane in the primary air flow passage and the secondary air introduced tangentially and radially. Hence, the sampling was performed in order to test the probe in the hot combustor environment and not to obtain data on the combustor performance.

Tests were performed with the combustor gas fired at 2.6×10^6 Btu/hr with 73% excess air. Radial profiles were obtained for nitric oxide and temperature at two axial locations in the combustor, 88 inches from the burner surface and 32 inches from the burner surface. The results of these tests are shown in Figure 11 and 12. As can be seen in Figure 11, at 88 inches from the burner, the temperature is fairly uniform across the combustor. It should be noted that due to a large uncertainty in the sample flowrate through the probe the absolute temperature levels are uncertain. Due to this uncertainty, the temperatures are presented on an arbitrary scale. Spacial range of the probe in the radial direction is from the combustor axis out to 86% of the combustor radius. Similarly, the nitric oxide profile 88 inches from the burner surface is uniform across the cross section as seen in Figure 12.

The probe was then moved to a position 32 inches from the burner surface. At this location definite variations in nitric oxide and temperature are observed over the cross section. As is seen in Figure 11, the temperature gradually increases from the centerline out to a distance of $r/R = 0.5$ (r/R is the ratio of probe radial position to combustor radius). At $r/R = 0.5$ there is a rather abrupt increase in temperature after which the temperature is fairly uniform. The nitric oxide profile at a distance of 32 inches from the burner surface shows that the NO concentration gradually decreases from a center line value of 55 ppm (corrected to stoichiometric with the local oxygen concentration) to a value of 48 ppm at $r/R = 0.6$. Between r/R of 0.6 and 0.86 there is a

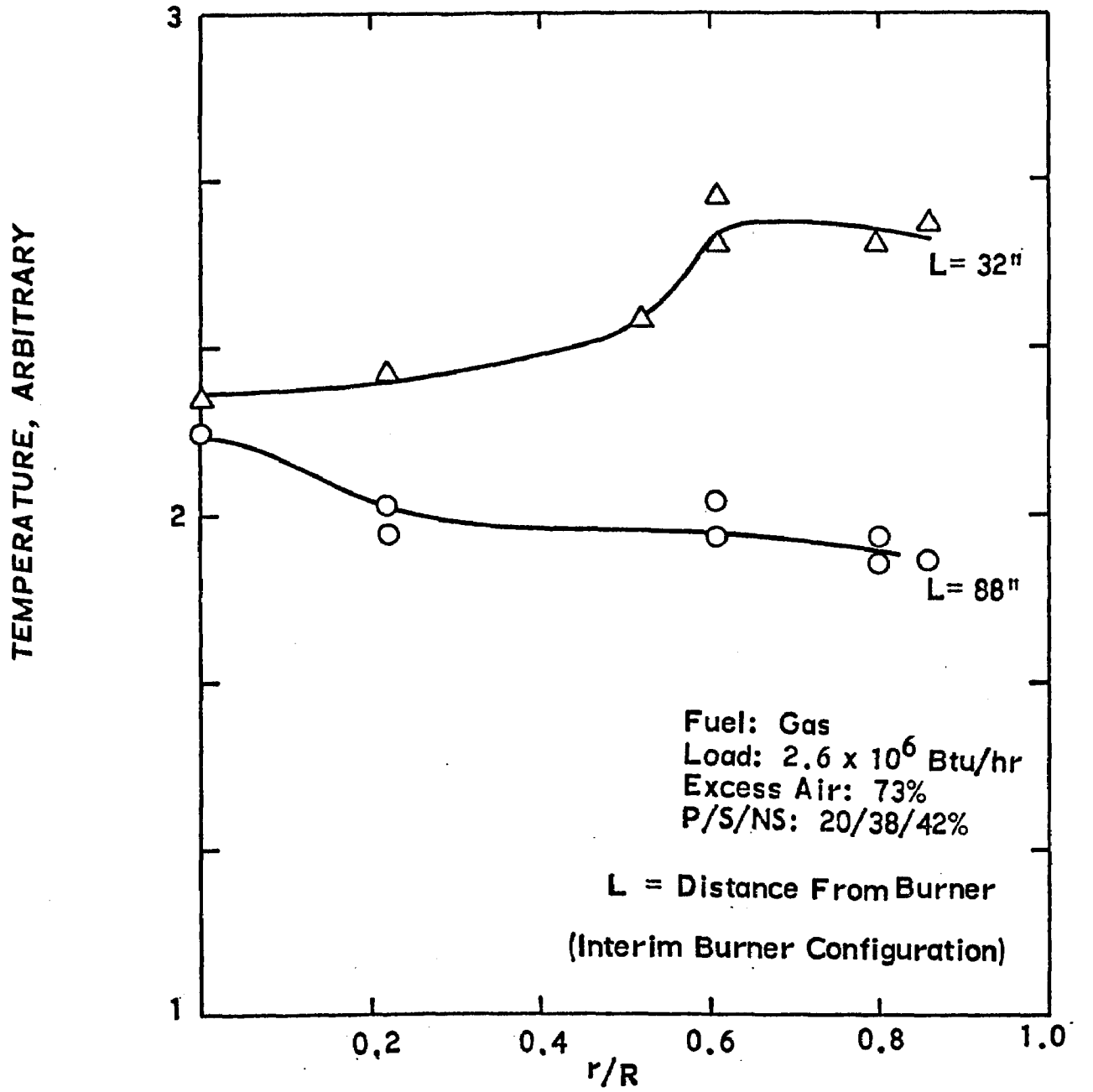

Figure 11. Radial and Axial Variations in Temperature with Gas Firing

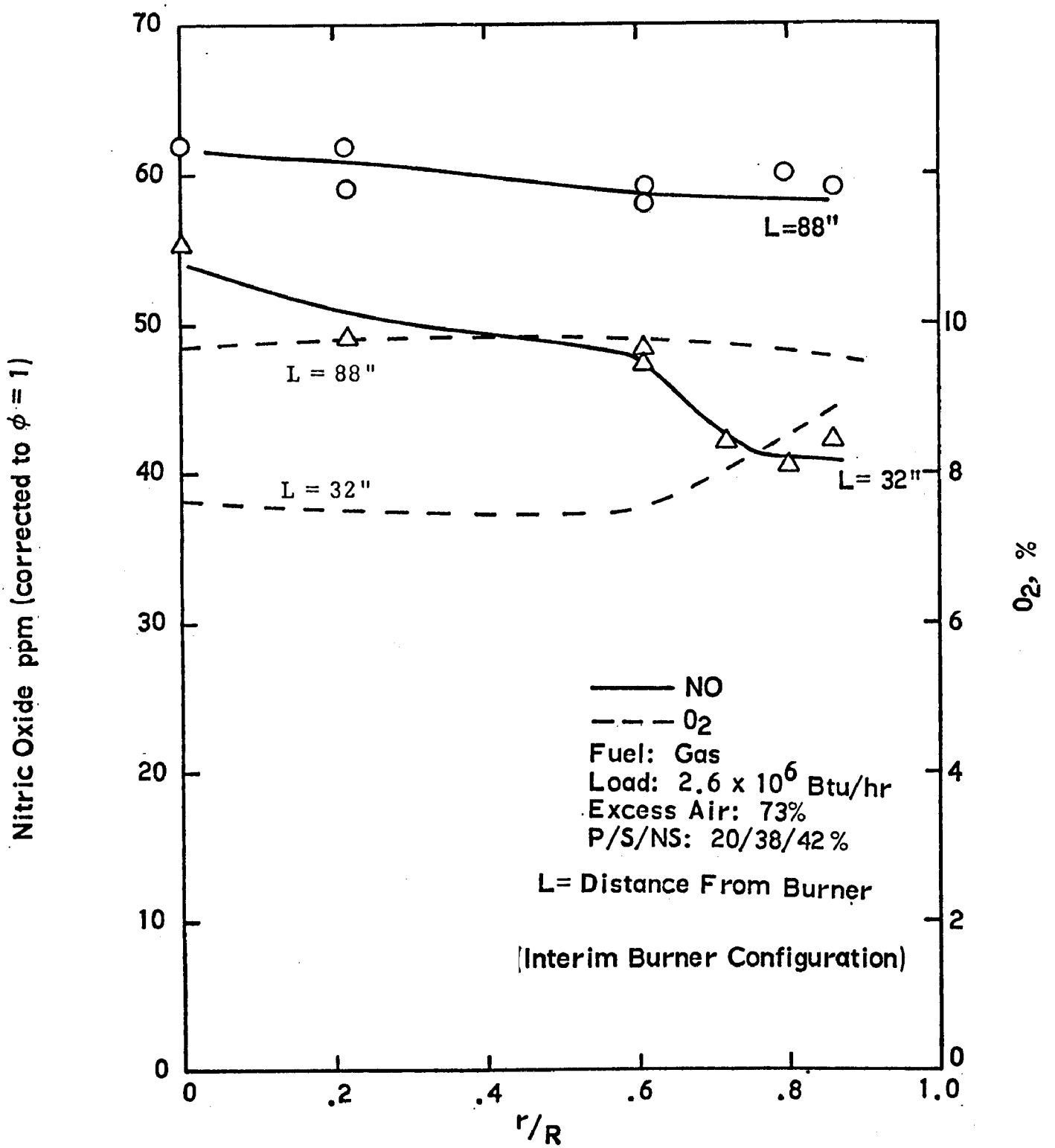

Figure 12. Radial and Axial Variations in Nitric Oxide with Gas Firing

rather abrupt decrease in nitric oxide to a value of 42 ppm. Further, from Figure 12, it is observed that approximately 70%of the NO is formed within a distance of 32 inches of the burner. During sampling with the combustor gas fired no overheating or clogging problems were encountered and the probe could be operated in the flame for extended periods of time.

Following the gas flame sampling, the probe was used to sample an oil flame. During these tests the combustor was oil fired at 2.5×10^6 Btu/hr with 70% excess air. Radial profiles of nitric oxide and temperature were measured at three axial positions; 88 inches, 57 inches, and 32 inches from the oil nozzle. The results of these tests are presented in Figures 13 and 14. The results presented in Figure 13 show a somewhat uniform temperature 32 inches from the burner which extends from the centerline out to about 0.6 of the combustor radius, after which the temperature rises. Farther downstream the temperature profile flattens out as shown in the profiles taken 57 and 88 inches from the oil nozzle. The nitric oxide results for this flame are shown in Figure 14.

During sample of the oil flame, there was significant soot accumulation in the probe and line. At 32 inches from the burner the sample flowrate decreased by 40% after 10 minutes of operation. The sample line and probe were then purged with air after which the sample flowrate increased to its original value. This procedure was then repeated every 10 minutes during sampling. Since the probe was purged and the sample flowrate returned to its initial value it appears that the aspiration and accumulation of oil within the probe is not a problem.

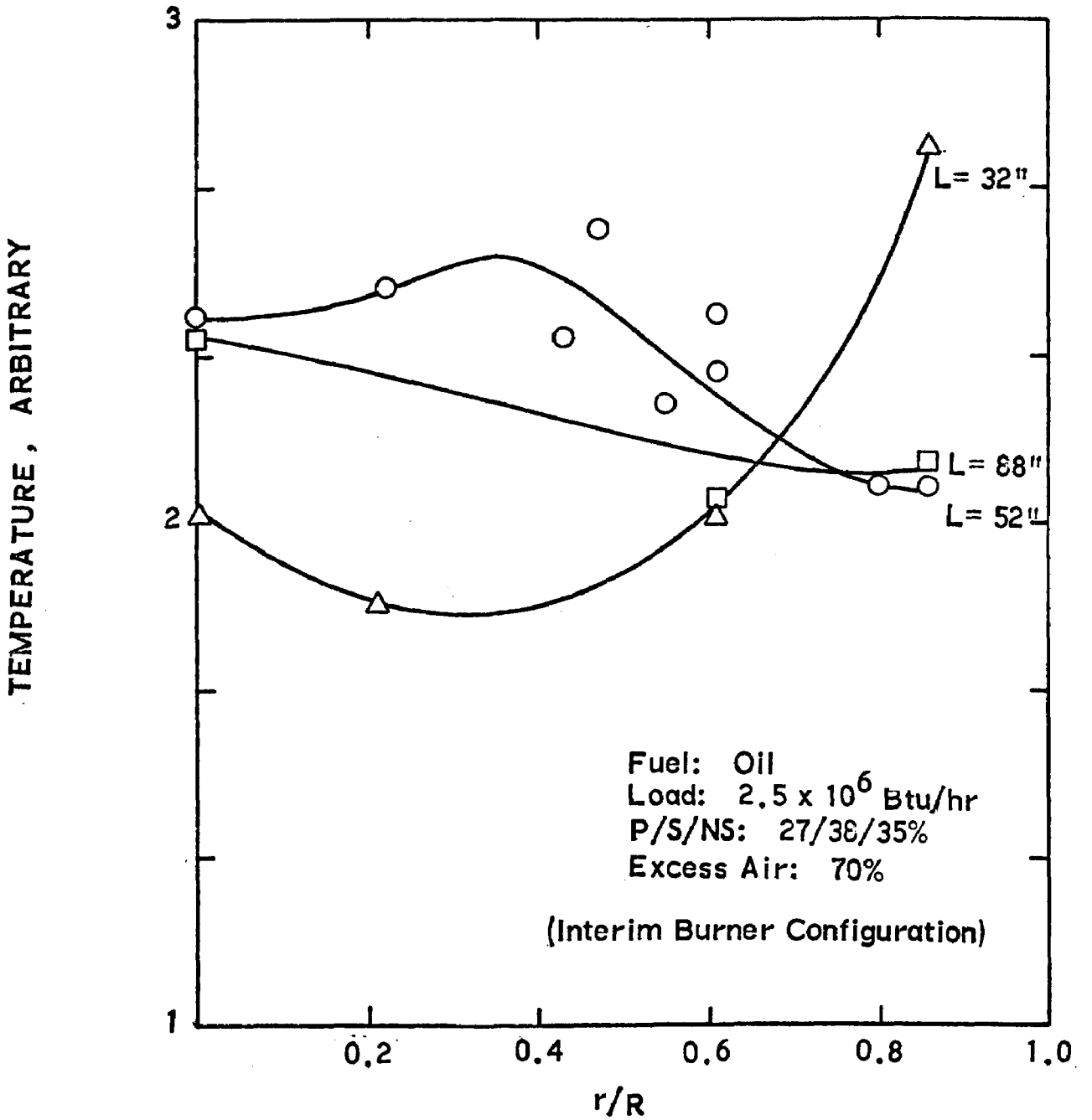

Figure 13. Radial and Axial Variations in Temperature with Oil Firing

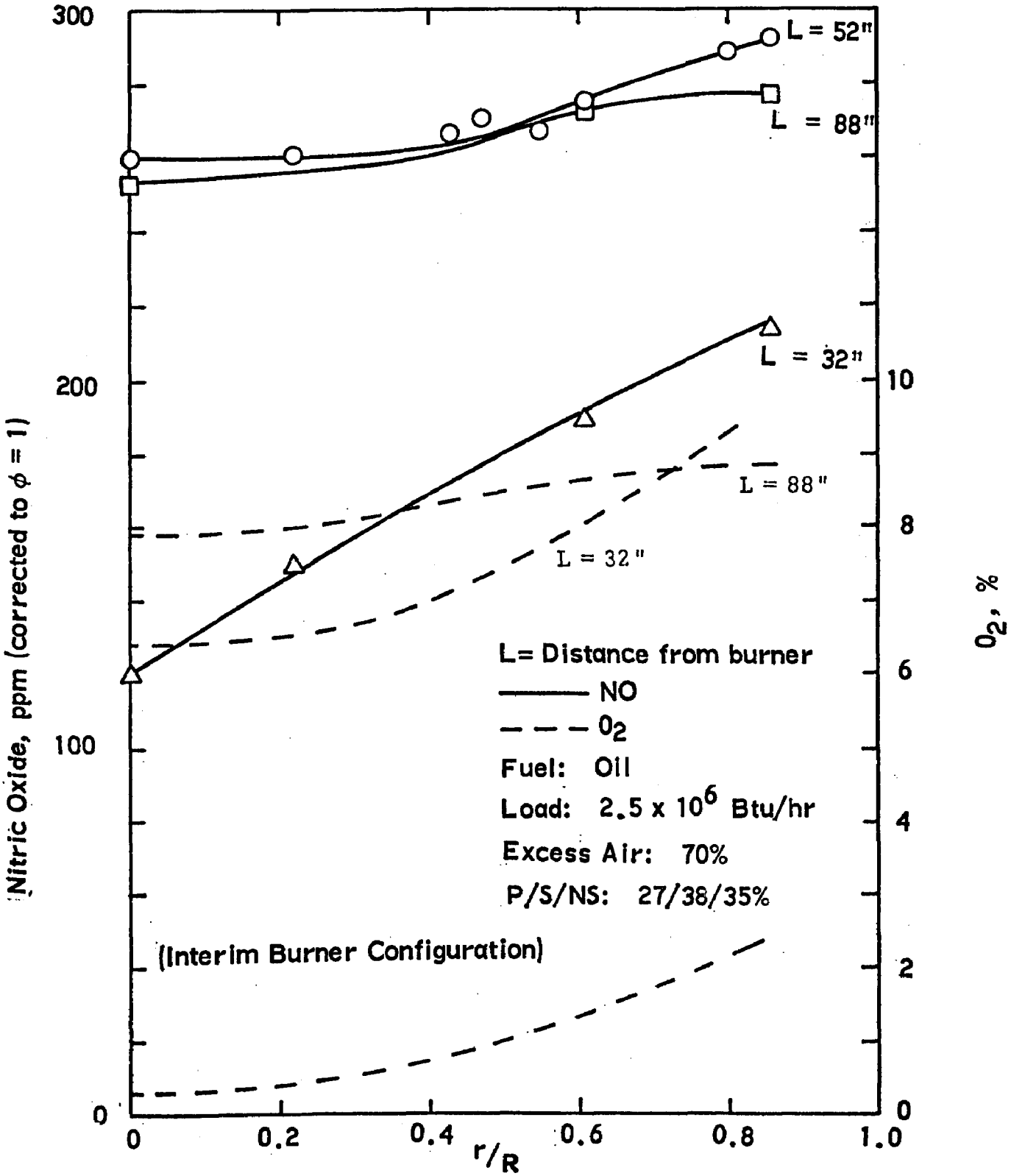

Figure 14. Radial and Axial Variations in Nitric Oxide with Oil Firing

2. Preliminary Emissions Testing with No. 6 Oil

Following completion of the combustor shakedown tests, preliminary emissions tests were conducted. In order to establish an understanding of the emissions behavior of the combustor, tests were performed with No. 6 oil firing at variable load, excess air, primary/secondary ratio. The results of these tests are presented in Figures 15, 16 and 17 with a brief discussion below.

In Figure 15, results are presented of the effect of excess air on nitric oxide and smoke emissions while operating on No. 6 oil. In these tests, the excess air was varied by holding the load constant and varying the total air flow. The results show that varying the excess air from 7% to 50% results in a 12% increase in NO. In terms of mass emissions the combustor is emitting, on the average, 4.4 grams NO/kg fuel which is within the range of typical operation of oil fired package boilers as shown in Table 1.

For comparison purposes, the NO and smoke emissions from an identical combustor operated by the EPA are also shown in Figure 15. The only difference in the two units is that the EPA facility utilizes an unmodified Ray burner. The higher NO emissions obtained from the Ultrasystems facility may be due to the differences in the nitrogen content of the fuels. This may also account for the differences in smoke emissions from the two units: Smoke emissions from the Ultrasystems unit are approximately one bacharach smoke number higher than the EPA combustor.

Next, the effect of the primary to secondary air ratio on NO and smoke emissions was investigated. These results are shown in Figure 16 with the burner operating at 17% excess air and at two loads, 3.5×10^6 Btu/hr and 2.8×10^6 Btu/hr.

The effect of swirl on NO and smoke emissions was investigated and the results are shown in Figure 17. During these tests the burner was operated at a load of 3.5×10^6 Btu/hr, 17% excess air and an air distribution of 50% primary, 50% secondary. The amount of swirl is controlled by varying the inlet velocity of the secondary air. As shown in Figure 6, the secondary air enters the burner tangentially; hence, varying the inlet velocity will vary the inlet angular momentum. Thus the amount of swirl, which is characterized as

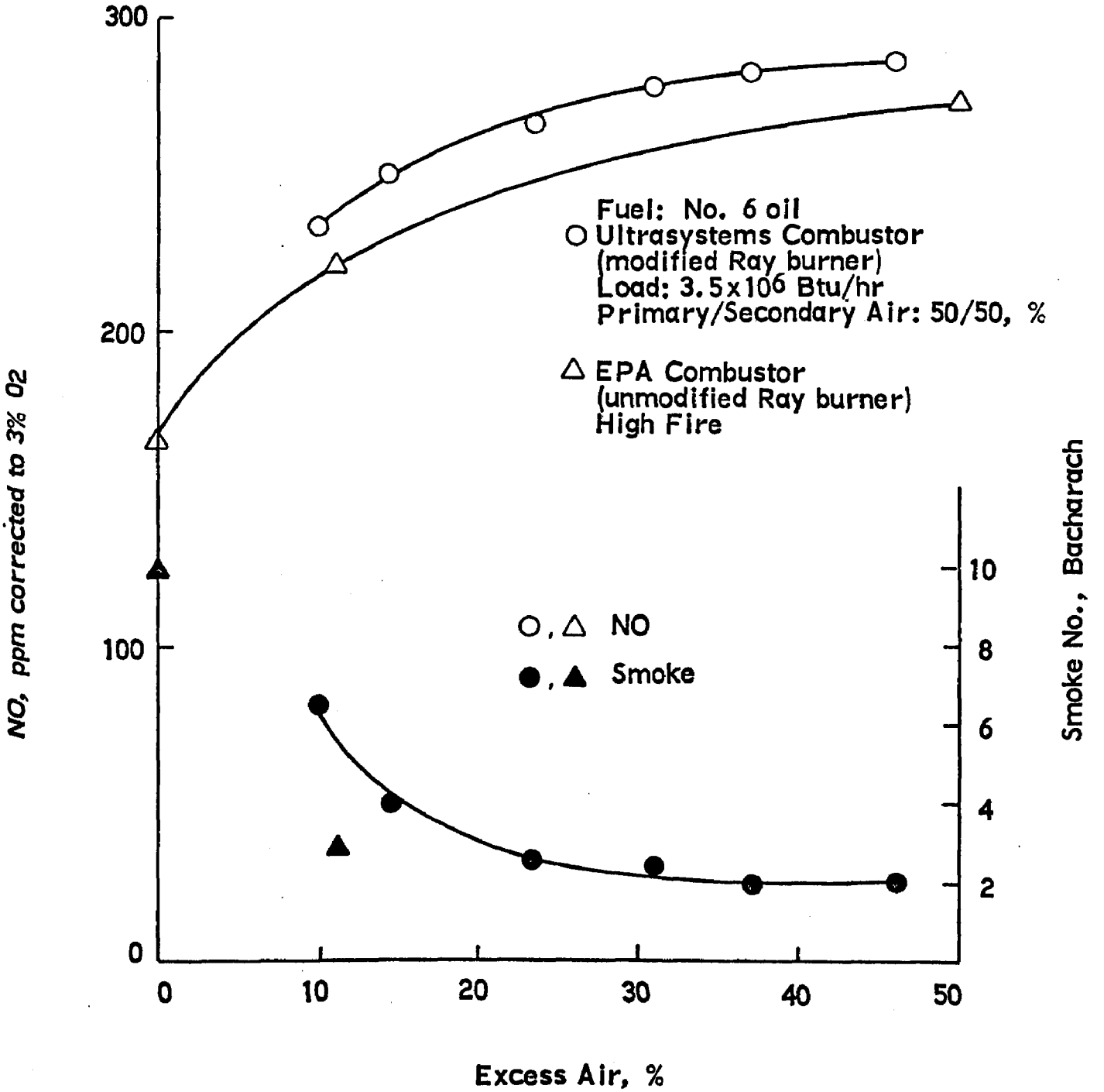

Figure 15. Effect of Excess Air on NO and Smoke Emissions.

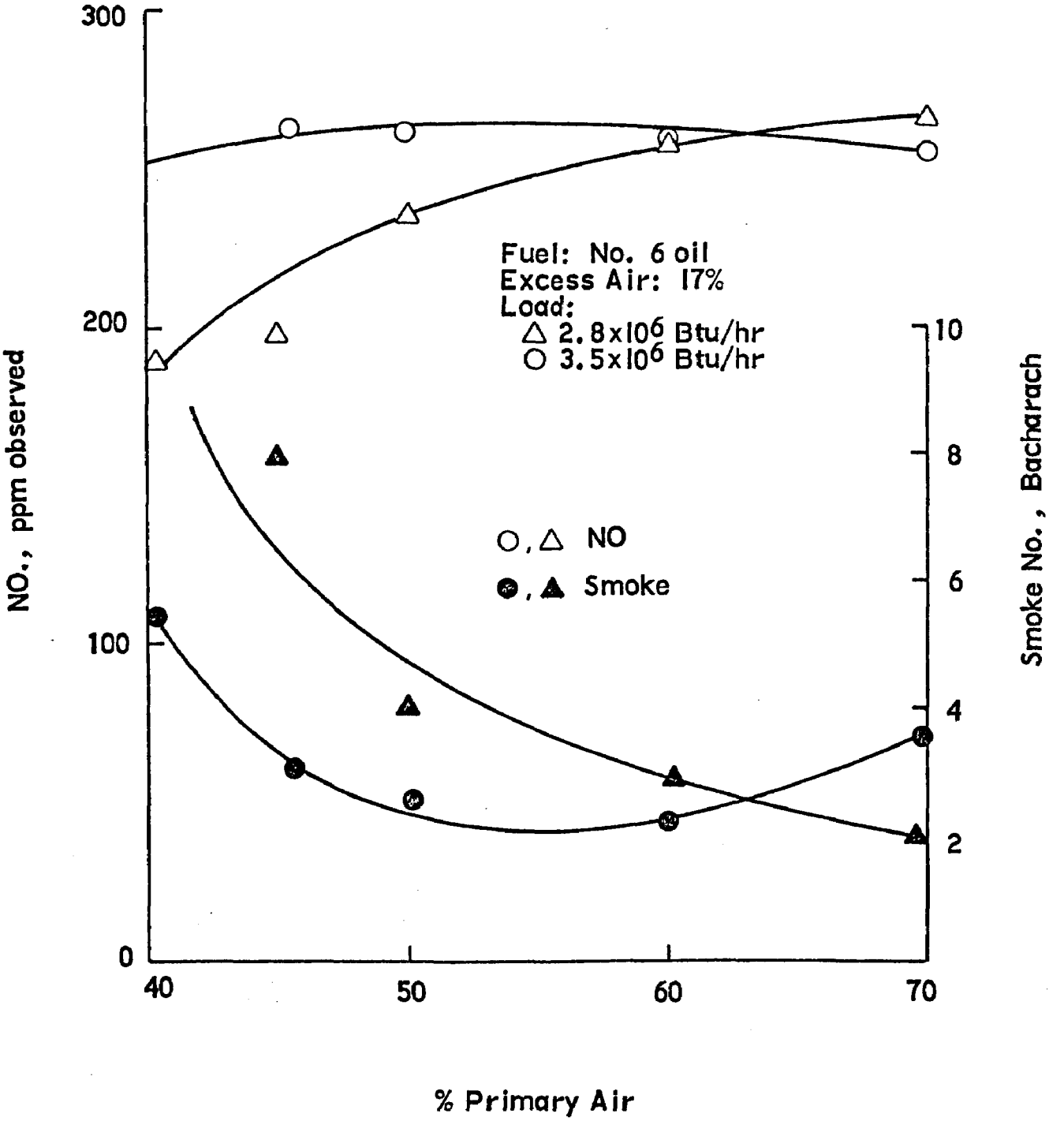

Figure 16. Effect of Primary Air on NO and Smoke Emissions.

$$S = \frac{\text{(Angular momentum)}}{\text{(Axial momentum) (burner radius)}}$$

can be varied.

The combustor is presently ready for rigorous pollutant minimization testing.

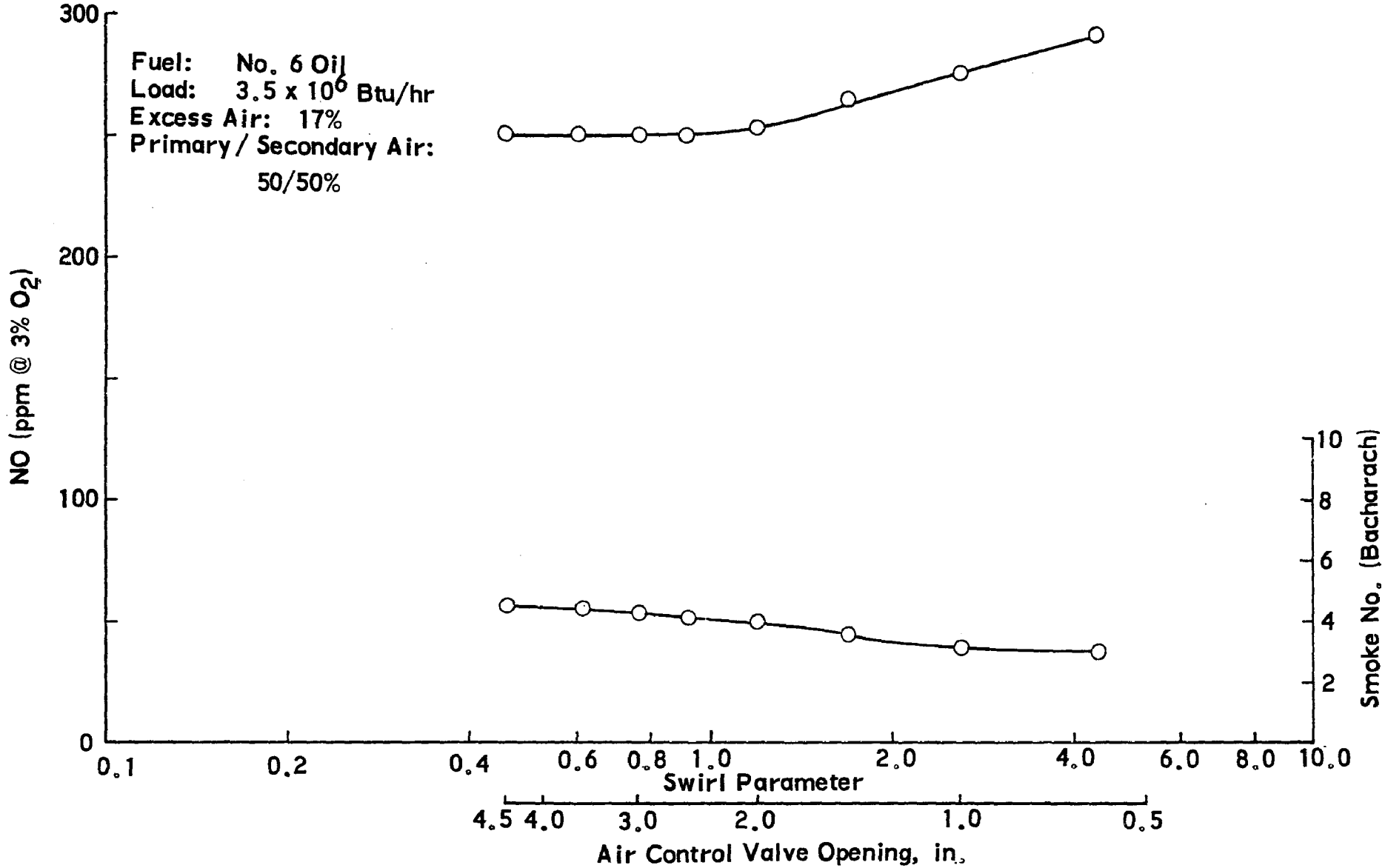
Fuel: No. 6 Oil
Load: 3.5 x 10^6 Btu/hr
Excess Air: 17%
Primary / Secondary Air:
50/50%
NO (ppm @ 3% O2)
300
200
100
0
Smoke No. (Bacharach)
10
8
6
4
2
0.1
0.2
0.4
0.6
0.8
1.0
2.0
4.0
6.0
8.0
10.0
Swirl Parameter
4.5
4.0
3.0
2.0
1.0
0.5
Air Control Valve Opening, in.

IV. TEST PROGRAM

TEST PROGRAM TO UNCOVER OPTIMUM CONFIGURATIONS

A. General Approach

Package boilers are fired under such widely varying conditions (load, fuel type, atomization, L/D) that a technique which controls emissions at condition A may give excessive smoke or NO_x at condition B. Furthermore, there are so many promising ER and SC injection techniques that it is irrational to attempt to test each control technique under each boiler operating variation. This dilemma is portrayed in Figure 18 where the spectre of fifty thousand conceivable tests arises.

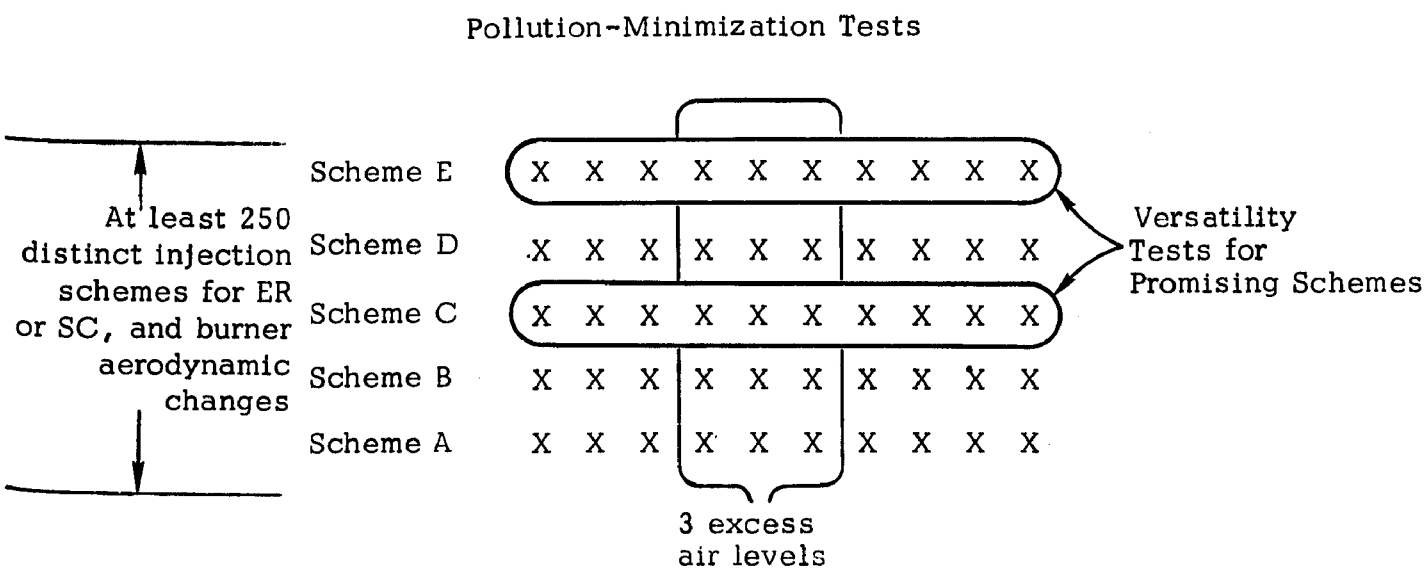

Figure 18. Conceivable Test Matrix Showing 50,000 Possible Tests

The basic approach of the proposed test program is to screen all ER/SC injection schemes at the same restricted representative combustor settings, then expose the most promising ER/SC control schemes to a wide range of combustor settings. These two test series are represented by vertical and horizontal bars in Figure 18. In total, approximately 1000 tests are indicated, distributed as follows:

Pollutant Minimization Tests:	approximately 800
Versatility Tests:	approximately 200

The test facility has been designed with enough versatility to permit not only 3 burner changes but also testing of 5 injection concepts with about 5 distinct parametric variations of each. While the combustor is fired up, a given ER or SC technique may be run through 10 variations in 4 or 5 hours, allowing each run to reach steady state before recording flame and emissions data. Another 3 or 4 hours is allotted for furnace preparation, instrument calibration and clean-up. Thus, tests are executed in sets of about 10 at an average overall rate of 45 minutes per test.

The dual approach described above guarantees a comprehensive treatment of the possibilities in exhaust recirculation and staged combustion. The number of tests is reduced to 1000 from at least 50,000, without severe danger of overlooking a promising technique. Since a control technique should not be considered unless it functions under "standard" operating conditions, the efficient reduction of the test matrix as described in Figure 18 is justified.

The value of the wealth of emissions data to be produced is magnified by a consistent framework of understanding. For this reason, Phase II is composed of acquiring data and explaining it by model development, computerized predictions, and critical interpretation.

B. Pollutant Minimization Tests

All tests to seek air or flue-gas injection schemes giving minimum pollution are to be run on No. 6 fuel oil under standard conditions of firing rate, atomization mode, combustion-chamber L/D. (Versatility tests are run later)

The first tests are run just making simple burner changes with cursory flame sampling to indicate pollutant levels at several areas within the firing tube. Variations will include:

Swirl
Primary/secondary ratio
Oil temperature
Atomization air pressure

In summary, four relatively simple burner modifications will be investigated as means to reduce emissions. In general, these "front-end" modifications call for much less severe hardware changes than the furnace modifications to be described, and therefore are logical candidates for quick field modification. The effectiveness of these burner-oriented techniques relies on the well-known sensitivity of emissions to near-burner mixing patterns. They are so simple, we should try them first. This initial data will be compared with the test results taken during the baseline tests. A simple model will also be composed to explain the baseline emission results. The baseline results establish control data for comparison with combustion modification, and will be repeated periodically throughout the test program to verify standardization of the furnace. Any systematic trends such as soot accumulation will be detected.

The next combustion modification series will utilize exhaust recirculation. Three injection schemes will be used, listed in order of estimated promptness of flame dilution and cooling:

1. Conventional annular injection
2. Injection through fuel gas ports
3. Throat exit injection

The percent of flue gas recirculated and the excess air will be varied for each injection scheme, while monitoring NO_x, CO, O_2, and smoke in the flue gas and recording furnace exit temperature. The range in recirculation will be limited by excessive smoke production and/or combustion instability; and similar extremes will be determined for all injection configurations. Flame sampling will be carried out extensively enough to characterize all the significant changes occurring within the combustion chamber with each

injection profile. When the test series is complete and the data displayed by computer-drawn graphics, the model for pollutant formation will be upgraded to explain the new results.

Tests of staged combustion ("SC") will follow the ER testing. Variations in injection schemes will include the following five locations of introducing air for delayed combustion:

1. Throat exit injection
2-4. Downstream wall jets w_1, w_2, w_3
5. Downstream axial countershower

These concepts are to be tested singly and in combination, so that at least 30 possibilities are there. Five air distribution profiles (e.g., primary vs. secondary, upstream vs. downstream) will be tested for each injection scheme.

Throughout the pollutant minimization tests, a few points will be made using a low nitrogen No. 2 oil. This will allow the assessment of the nitric oxide arising from nitrogen fixation and from fuel nitrogen.

A test program of 828 tests is shown in Table 3.

After the tests of staged combustion and combined ER/SC, the model will be modified to account for axisymmetric mixing. The upgraded model will then be exercised to explain the SC results.

A parametric study will be conducted with the model to indicate the most promising designs for combustion modification. In a parallel effort, other promising designs will be derived from direct correlations and analysis of the test data. These two sources for test planning will be combined with an engineering and economics analysis to determine a final set of tests demonstrating the designs for minimum practical emissions.

TABLE 3

POLLUTANT MINIMIZATION TESTS

Baseline Conditions:

Load (Full - 3.7×10^6 Btu/hr, Part - 2×10^6 Btu/hr
Excess Air (17%, 35%)
Air Distribution (Primary/Secondary - 50/50)
Oil Temperature (200°F)
Atomization (air, 18 psi)
Combustor (L/D = 4)
Coolant Inlet Temperature (350°F)
No. 6 Oil

Focus of Test	Test Conditions	No. Tests
Burner Variations	Primary/secondary - 30/70, 40/60, 50/50, 60/40, 70/30* Secondary swirl - primary = 40%: low swirl, intermediate, high swirl** primary = 50%: low swirl, intermediate, high swirl primary = 60%: low swirl, intermediate, high swirl Oil temperature: Full load: 170, 180, 190, 200°F Part load: 180, 190, 200, 210, 220°F Atomization Air Pressure: 14, 16, 18, 20 psi	88
External Recirculation	3 recycle ratios - 10%, 20%, 30%	168
Staged Combustion	Baseline: 3.7×10^6 Btu/hr, 17 % excess air I. Injection schemes 2 - burner equivalence ratios (Φ=0.7,1.0) 3 - air distribution a) single modification vary vary primary/secondary 40/60, 50/50, 60/40 b) multiple injection vary staged/burner air ratios 20/80,50/50,80/20 II. Side wall Injector Orientation 3 injectors 4 orientations (upstream,downstream,toward and against swirl) 1 load 3.7×10^6 Btu/hr, 1 excess air, 17% 1 burner equivalence ratio	230 12
Combined Stage and Recirculation	2 types of external recirculation, combined with 4 types of staged combustion, 2 levels of ER (10%,30%) 2 levels of staging (Burner Φ=0.7,1.0)	150
Interspersed Standardization	Performed at random to monitor any systematic trends in combustor behavior and for tests with No. 2 oil	50
Final Tests of	1 ER @ 6 levels of ER (5,10,15,20,25,35%) 2 SC @ 2x(% staged, burner Φ=0.8,1.0) @ 2 distribution profiles 2 combinations ER/SC @ 3 ER levels (10,20 30%) @ 3 % staged(burner Φ=0.8,0.9,1.0)	 66 64
	Total	828

* Each point tested over the 8 baseline test conditions.
** For these tests the baseline primary/secondary will be varied.

C. Versatility Tests

Package boilers operate over a considerable range of conditions. In order to evaluate combustion modification techniques for emission control, this entire range must be traversed with the control technique in force. After all, what good is an NO_x-reduction technique if it billows smoke at low load.

A distinct series of the test program is planned to do this. For discussion, let us assume there will be three optimum configurations developed in the pollutant minimization work, for example

(i) One each configuration applicable for simple in-the-field modifications for fire-tube boilers,

(ii) a similar configuration for water-tube package boilers,

(iii) one configuration which is an extensive departure from current package boiler design.

The three designs (which will have performed with minimum pollutant emission at the standard test condition) will be tested in a versatility test series where firing rate, fuel, chamber shape, duty cycle, and atomization mode will be varied. The parameters and number of variations to be tested are proposed in Table 4.

TABLE 4

VERSATILITY TESTS

Parameter	Desired Variations
Load	3
Excess air	3
Fuel (gas, #6 oil, #2 oil)	3
Atomization mode (steam vs. air vs. sonic)	3 (#6 oil only)
#6 oil variations (e.g. Nitrogen content)	2 (oil only)
Total number of combinations tested	126 oil 18 gas

The versatility testing will provide additional empirical data to correlate with the mathematical model.

D. Plans for Field Testing

As part of the concluding work in Phase II, the plans for the Phase III field testing are to be formulated. The ER and SC injection schemes to be tested under practical field conditions are now determined. In coordination with FW, we will plan modifications to fire-tube and water-tube units which are operating in the field. Particularly sensitive repercussions noticed in using SC and ER techniques will be carefully noted to be duly observed in Phase III trial runs.

Some of the aspects of field testing which will be taken into account are:

1. Which emissions must be monitored and what boiler points are best to monitor.
2. Opportunity to shut down and modify existing units.
3. Test plans for comprehensive series of one-hour runs. Competence of the boiler operators at a given location to handle additional controls or monitors in connection with long term field testing.
4. Type and uniformity of fuel available.
5. Type of boiler service such as load level, degree of transient operation, continuity of operation.

V. REFERENCES

1. Levy, A., et al, "A Field Investigation of Emissions From Fuel Oil Combustion for Space Heating," API Publication 4099, 1 November 1971.

2. Bartok, W., Crawford, A. R., and Piageri, G. J., "Systematic Investigation of Nitrogen Oxides Emissions and Combustion Control Methods for Power Plant Boilers," Paper 38c, AIChE Meeting, 70th National (1971).

3. Bahn, G. S., and Burkland, C. V., "Chemical Kinetics in Low Emission External Combustion," Preprint 37a, presented at the 70th AIChE National Meeting, Atlantic City, 24 August-1 September (1971).

4. Tornaras, Z. G. and Reckner, L., "Tests on Burner-Boiler Units, No. 6 Oil", Scott Research Laboratories, Inc., SRL Project 1077, Contract PH 27-00154 NCAPL (1968).

5. Hangebrauck, R. P., Von Lehuden, D. J., and Meeker, J. E., "Emissions of Polynuclear Hydrocarbons and Other Pollutants from Heat Generation and Incineration Processes", JAPCA 14 267 (1964).

6. Chass, R. L., George, R. E., "Contaminant Emissions from the Combustion of Fuels," Paper 59-52 presented at the Air Pollution Control Association 52nd Annual Meeting, June 1959.

7. API SS5 Task Force, Progress Report, 1972.

8. Sommerlad, R. E., Private Communication, March (1971).

9. Martin, G.B., Berkau, E. E., "Preliminary Evaluation of Flue Gas Recirculation as a Control Method for Thermal and Fuel Related Nitric Oxide Emissions," presented at WSSCI Meeting, University of California Irvine, October 1971.

10. Turner, D. W., and Siegmund C. W., "Staged Combustion and Flue Gas Recycle: Potential for Minimizing NO_x from Fuel Oil Combustion," presented at The American Flame Research Committee Flame Days, Chicago, Illinois, September 6-7, 1972.

11. Barnhard, D. H., and Diehl, E. K.,"Control of Nitrogen Oxides in Boiler Flue Gases by Two Stage Combustion," J.APCA, 10, 397 (1960).

12. Bienstock, D., Amsler, R. L., and Bauer, E. R.,Jr., "Formation of Oxides of Nitrogen in Pulverized Coal Combustion," J.APCA, 16, 442 (1966).

13. Downham, A.F., "Trends in Small Boiler Design," presented at the American Power Conference (1964).

14. Andrews, R. L., Siegmund, C. W., and Levine, D. G., "Effect of Flue Gas Recirculation on Emissions from Heating-Oil Combustion," APCA 61st Annual Meeting (1968).

15. "A Versatile Combustor for Developing Emission Control Techniques," Reference Report of Phase I activities for API Task Force SS4.

VI. TABLE OF CONVERSION FACTORS

To Convert		Into	Multiply By
LENGTH	inches	meters	2.54×10^{-2}
	feet	meters	3.048×10^{-1}
	meters	centimeters	1.0×10^{2}
AREA	square inches	square meters	6.452
	square feet	square meters	9.29×10^{-2}
	square meters	square centimeters	1.0×10^{4}
VOLUME	cubic inches	cubic centimeters	1.639×10^{1}
	cubic feet	cubic meters	2.832×10^{-2}
	liters	cubic meters	1.0×10^{-3}
	gallons	liters	3.785
	cubic centimeters	cubic meters	1.0×10^{-6}
MASS	pounds	grams	4.54×10^{2}
	grams	kilograms	1.0×10^{3}
PRESSURE	pounds/in^2	dynes/cm^2	6.9×10^{4}
	pounds/in^2	feet of water	1.60×10^{-2}
ENERGY	Btu	gram-calories	2.52×10^{2}
POWER	Btu/hr	gram-calories/second	7.0×10^{-2}
	kilowatts	gram-calories/hour	8.6×10^{5}
	horsepower	kilowatts	7.46×10^{-1}
	horsepower(boiler)	Btu/hr	3.35×10^{1}
	horsepower(boiler)	kilowatts	9.803
TEMPERATURE	degrees Farenheit (^{o}F)	degrees Celsius (^{o}C)	(^{o}F - 32) $\times 5.56 \times 10^{-1}$
	degrees Rankine (^{o}R)	degrees Kelvin (^{o}K)	5.56×10^{-1}

BIBLIOGRAPHIC DATA SHEET	1. Report No. EPA-R2-73-292a	2.	3. Recipient's Accession No.

4. Title and Subtitle
Experimental Combustor for Development of Package Boiler Emission Control Techniques--Phase I of III

5. Report Date
July 1973

6.

7. Author(s)
L. J. Muzio and R. P. Wilson, Jr.

8. Performing Organization Rept. No.

9. Performing Organization Name and Address
Ultrasystems, Inc.
2400 Michelson Drive
Irvine, California 92664

10. Project/Task/Work Unit No

11. Contract/Grant No.
68-02-0222

12. Sponsoring Organization Name and Address (See Block 15)
EPA, Office of Research and Monitoring
NERC-RTP, Control Systems Laboratory
Research Triangle Park, North Carolina 27711

13. Type of Report & Period Covered
Phase I of III

14.

15. Supplementary Notes This study was co-sponsored by: The American Petroleum Institute, 1801 K Street, NW, Washington, D.C. 20006.

16. Abstracts The report describes Phase I of a program during which a unique 3.7 million Btu/hr oil combustor was designed and built to develop NOx control techniques for small boilers. The facility duplicates key aspects of oil flames of representative boilers in the 1 million to 1 billion Btu/hr range, and can recycle and inject any amount of flue gas or air at unconventional sites on the combustion boundary. The facility can also measure all flows (air, fuel, and flue gas), temperatures along the combustor, and NOx, CO, O2, and smoke emissions. Preliminary tests indicate that emissions from the combustor (approximately 300 ppm of NO or 4.4 gm NO/Kg fuel), operating on No. 6 oil, are consistent with emissions from field-tested package boilers. In Phase II, the combustor will be used to screen many different applications of combustion modification techniques for controlling pollutant emissions. Phase III will include long-term testing of the optimum configurations.

17. Key Words and Document Analysis. 17a. Descriptors

Air Pollution
Boilers
Combustion
Emission
Nitrogen Oxides
Nitrogen Oxide (NO)
Fuel Oil
Carbon Monoxide
Oxygen
Smoke
Test Equipment

17b. Identifiers/Open-Ended Terms

Air Pollution Control
Stationary Sources
Industrial Boilers
Commercial Boilers
Package Boilers
Flame Modification
Flue Gas Recirculation
Staged Combustion
No. 6 Oil

17c. COSATI Field/Group 21B, 21D, 13B

18. Availability Statement	19. Security Class (This Report)	21. No. of Pages
Unlimited	UNCLASSIFIED	46
	20. Security Class (This Page) UNCLASSIFIED	22. Price

FORM NTIS-35 (REV. 3-72) USCOMM-DC 14952-P72