RESEARCH TRIANGLE INSTITUTE

December 1980

HOT METAL DESULFURIZATION, BOF CHARGING AND OXYGEN BLOWING: LEVEL 1 ENVIRONMENTAL ASSESSMENT

by

C. W. Westbrook
Research Triangle Institute
P. O. Box 12194
Research Triangle Park, N. C. 27709

EPA Contract No. 68-02-3152
RTI Project No. 41U-1883-2

Project Officer
R. C. McCrillis

Industrial Environmental Research Laboratory
Office of Energy, Minerals and Industry
U.S. Environmental Protection Agency
Research Triangle Park, N. C. 27711

Prepared for

U.S. ENVIRONMENTAL PROTECTION AGENCY
OFFICE OF RESEARCH AND DEVELOPMENT
WASHINGTON, D. C. 20460

RESEARCH TRIANGLE PARK, NORTH CAROLINA 27709

025143

ABSTRACT

An EPA/IERL-RTP Level 1 environmental assessment of fumes generated at one plant during external hot metal desulfurization (HMDS), hot metal charging to the basic oxygen furnace (BOF), and during oxygen blowing of the BOF was performed. The purpose of the work was to develop preliminary information on the organic and inorganic matter generated in these processes.

Fumes generated (before emission control) during HMDS contain about 0.64 kg of particulate and 1×10^{-3} kg of organic per megagram of metal desulfurized (1.27 and 2×10^{-3} lb/ton, respectively). Although a small amount of possibly carcinogenic polynuclear aromatic hydrocarbons (PNA) were detected, none of the organic categories were found in sufficiently high concentration to be of environmental concern. Sufficiently high concentrations of some metals, e.g., lead, mercury, antimony, and arsenic, were found to require that highly efficient dust capture and environmentally sound disposal be practiced.

Fumes generated (before control) during BOF hot metal charging contain about 5.3×10^{-2} kg of particulate and 5.8×10^{-4} kg of organic per megagram of hot metal charged (10.6×10^{-2} and 11.6×10^{-4} lb/ton, respectively). No PNAs were detected and none of the organic category concentrations are high enough for environmental concern. Sufficiently high concentrations of some metals, e.g., arsenic, lead, mercury, and cadmium, were found to require that good dust capture and disposal be practiced. Dust from the BOF baghouse, which collects fume from hot metal transfer and charging, scrap charging, tapping and slagging, also contained about 100 mg PNA/kg (0.2 lb/ton) of dust. The source of the PNA was not determined.

About 11 kg of particulate and 0.004 kg of organic per megagram of steel (22 and 0.008 lb/ton, respectively) processed in the BOF is captured

by the primary emissions of control scrubber during the oxygen blow period. Although no PNAs were found in the scrubber water, a small amount (<1 mg/kg solids) was found in solid removed from the primary clarifier. None of the organic concentrations are high enough for environmental concern. The concentrations of lead, selenium, manganese, copper, and zinc in the clarified recycle water would be of concern if discharged to surface waters.

TABLE OF CONTENTS

	Page
Abstract	iii
List of Figures	vi
List of Tables	vii
Acknowledgement	ix
1.0 INTRODUCTION	1
2.0 SUMMARY	2
2.1 HOT METAL DESULFURIZATION	2
2.2 BOF HOT METAL CHARGING	4
2.3 BOF OXYGEN BLOWING	6
3.0 CONCLUSIONS	7
4.0 RECOMMENDATIONS	9
5.0 HOT METAL DESULFURIZATION	10
5.1 DESCRIPTION OF FACILITY	10
5.2 TEST DESCRIPTION	12
5.3 TEST RESULTS	14
6.0 BASIC OXYGEN	34
6.1 DESCRIPTION OF FACILITY	34
6.2 BOF HOT METAL CHARGING TEST DESCRIPTION	38
6.3 BOF HOT METAL CHARGING TEST RESULTS	39
6.4 DUST CAPTURED BY BOF SECONDARY EMISSION CONTROL BAGHOUSE	50
6.5 BOF OXYGEN BLOW	57
6.5.1 Description	57
6.5.2 Test Description	57
6.5.3 Test Results	58
References	70
Appendices	72
A. IR ANALYSIS REPORTS	A-1
B. LRMS ANALYSIS REPORTS	B-1
C. LC ANALYSIS REPORTS	C-1
D. SSMS ORIGINAL DATA	D-1

LIST OF FIGURES

Number		Page
1	HMDS reagent addition system	11
2	HMDS emission control system	13
3	Schematic of BOF vessel	35
4	BOF primary fume control system	36
5	BOF shop secondary fume control system	37

LIST OF TABLES

Number		Page
1	HMDS Total Particulate and Organic Matter Summary	3
2	BOF Hot Metal Charging Particulate and Organic Summary . . .	5
3	BOF Oxygen Blowing Water Treatment Samples	6
4	HMDS Process Data	15
5	SASS Test Data, Hot Metal Desulfurization	16
6	Particulates in HMDS Baghouse Inlet Gas Stream	17
7	Organics in HMDS Baghouse Inlet Gas Stream	19
8	Elemental Composition, HMDS-SASS Front Half Particulate . . .	21
9	Elemental Composition HMDS - SASS Impinger	23
10	Total Elemental Composition in HMDS Gas, Before Emission Control	25
11	Organic Extract Summary Table, SASS Particulate, Desulfurization	26
12	Organic Extract Summary Table, Desulfurization - SASS Organic Module	28
13	Organic Extract Summary Table, Desulfurization Baghouse Dust	31
14	Elemental Analysis of HMDS Baghouse Dust	33
15	BOF Charging Process Data	40
16	SASS Test Data, BOF Hot Metal Charging	41
17	Pre-Control Particulates from Hot Metal Charging of BOF . . .	42
18	Organics in BOF Hot Metal Charging Fume	44
19	Elemental Analysis, SASS Particulate, BOF Metal Charging . .	45
20	Elemental Analysis, SASS Impinger, BOF Hot Metal Charging . .	47
21	Summary Elemental Analysis, BOF Hot Metal Charging	49
22	Organic Extract Summary Table, BOF Hot Metal Charge - SASS Organic Module	51
23	Elemental Analysis, BOF Secondary Emissions Control Baghouse Dust	54

List of Tables (continued).

Number		Page
24	Organic Extract Summary Table, BOF Secondary Emissions Baghouse Dust	55
25	Process Information, BOF Scrubber Water Tests	58
26	BOF Scrubber Solids Concentration	58
27	Total Organics in BOF Water Treatment System Samples	59
28	Organic Extract Summary Table, BOF Scrubber Discharge Water	60
29	Organic Extract Summary Table, BOF Scrubber Clarified Recycle Water	62
30	Organic Extract Summary Table, Solids from BOF Scrubber Primary Clarifier	64
31	Organic Extract Summary Table, Solids from BOF Scrubber Secondary Clarifier	65
32	Elemental Analysis, Discharge Water from BOF Scrubber	68
33	Elemental Analysis, Clarified Recycle Water to BOF Scrubber	69
34	Notation and Conversion Factors	70

ACKNOWLEDGEMENT

This report has been submitted by Research Triangle Institute in partial fulfillment of the requirements of EPA Contract No. 68-02-3152. The author is grateful to R. C. McCrillis, the EPA Project Officer, for his advice and technical direction.

RTI also wishes to express their appreciation to the personnel of Acurex Corporation, particularly James Steiner and Ralph Pape, who coordinated and conducted the site sampling. The author also expresses his appreciation to Dr. Robert Handy of RTI, under whose direction most of the analytical work was done.

RTI wishes to extend special appreciation to the management and personnel of Kaiser Steel Company for their cooperation with this study.

1.0 INTRODUCTION

Significant quantities of dusts and fume are generated in the producduction of steel. Substantial efforts and monies have been spent in controlling the emissions and determining the effectiveness of the controls applied. Most of this effort has been directed toward control of particulate matter. In recent years, EPA has also been developing data on the amounts of types of organic compounds generated by many industries, including the steelmaking industry.

This report describes the results of an EPA-IERL/RTP Level 1[1] assessment of fumes generated at one plant (Kaiser Steel Company, Fontana, CA) in three phases of the manufacture of steel. The Level 1 approach, which measures particulates, inorganics, and organics, is a unified approach designed to indicate whether or not significant amounts of hazardous materials may be generated, and possibly emitted, by a process. The data obtained are useful in assessing whether or not the potential for significant environmental problems exist and allows priorities for future research efforts to be established.

The purpose of this study is to determine if the processes involved, not the plant (Kaiser Steel, Fontana, CA is recognized to be one of the best controlled plants in the United States), are potential generators of hazardous materials. Therefore, this work concentrated primarily on characterization of the fumes generated by the processes rather than on measuring discharges to the environment. As such, the results can be extrapolated, with appropriate caution, to similar processes at other plants.

The processes included in this study are external desulfurization of molten metal produced by the blast furnace, charging of hot metal into the basic oxygen furnace, and oxygen blowing of the basic oxygen furnace.

2.0 SUMMARY

Sampling and analysis of fumes generated during external desulfurization of blast furnace produced hot metal, during hot metal addition to the basic oxygen furnace (BOF), and during oxygen blowing of the BOF at Kaiser Steel Company, Fontana, CA were obtained. EPA-IERL/RTP Level 1 protocols[1] were used. Statements regarding the degree of environmental concern are based on comparison of the data obtained with published MEGs data.[2]

2.1 HOT METAL DESULFURIZATION

Molten metal produced by the blast furnace is cast into torpedo railcars. If the metal sulfur content exceeds desirable levels for specific further processing, the sulfur is removed from the metal, while still in the torpedo car, at the hot metal desulfurization station (HMDS). To accomplish this, appropriate amounts of calcium carbide (CaC_2) and calcium carbonate ($CaCO_3$) are blown into the metal (with nitrogen gas) through a lance submerged in the metal. Fumes generated in the process are collected by side draft hoods and collected in a baghouse. One to three cars can be desulfurized simultanteously. All side draft hoods operate during desulfurization regardless of the number of cars being processed.

The Source Assessment Sampling System (SASS) was used to collect samples during four periods of desulfurization. The sample was taken in the duct before the fume entered the baghouse and, thus, represents the amount of fume generated by the process and not the amount emitted to the environment. A sample of the dust collected by the baghouse was also obtained and analyzed.

Given in Table 1 is a summary of the particulate and total organic matter results. Three results are of particular interest; about half of the particulate is greater than 10 microns in size, total particulate generated is about 0.637 kg per megagram (1.274 lb/ton) of steel desulfurized, total organics generated are about 1×10^{-3} kg per Mg (2×10^{-3} lb/ton) of steel desulfurized.

TABLE 1. HMDS TOTAL PARTICULATE AND ORGANIC MATTER SUMMARY

Sample Type	Concentration in Gas mg/Nm^3	Generated, kg/Mg Steel Desulfurized
A. Particulate		
Probe, cyclone washes	175	0.018
>10 μ cyclone dust	3123	0.318
>3 μ cyclone dust	1754	0.179
>1 μ cyclone dust	900	0.092
<1 μ dust (filter)	298	0.030
TOTAL:	6251	0.637
B. Organic		
All particulates	3.8	3.87×10^{-4}
Organic module	6.1	6.21×10^{-4}
TOTAL:	9.9	1.01×10^{-3}

Calculations indicate the dust generated contains about 600 mg total organic per kg (1.2 lb/ton) of dust. Also, the total amount of organic in the gas per kg of dust in the gas is about 1600 mg/kg (3.2 lb/ton).

Organics on the particulate captured by the SASS train were predominately aliphatic hydrocarbons, silicones, phosphates, ketones and esters. No evidence of polynuclear aromatic hydrocarbons (PNA) was found. Organics found in the SASS organic module were predominately aliphatic hydrocarbons and ethers. A small amount of PNAs (possibly indeno(1,2,3-cd)pyrene, dibenzanthracene, and coronene) was detected. Based on comparison with MEG tables, none of the organic category concentrations are high enough to be of environmental concern.

Samples collected by the SASS train were also analyzed for elemental composition by spark source mass spectroscopy (SSMS) and atomic absorption spectroscopy. Concentrations of greater than 1 $\mu g/m^3$ were found for many elements. Significantly high concentrations of lead, mercury, barium, antimony, strontium, arsenic, copper, manganese, and chromium were found.

Therefore, it is important that baghouse dust collection efficiency be high.

Organics found on the HMDS dust collected by the baghouse were only 104 mg/kg (0.2 lb/ton) dust, substantially less than found in the dust before the baghouse. It would appear, therefore, that most (>90 percent) of the organic generated is not captured by the baghouse. The total mass that might be emitted at this plant, however, is probably too low to be of significant environmental concern.

Elemental analysis of the baghouse collected dust showed significant concentrations of strontium, chromium, and arsenic. Comparison of concentrations in the dust before the baghouse with the baghouse dust suggest that a number of elements may be passing through the baghouse (antimony, silver, and copper). The variability in the concentrations of many elements in the two sample types, however, also suggests this indication may only be a measure of the SSMS analytical accuracy.

2.2 BOF HOT METAL CHARGING

After scrap metal is charged into the BOF vessel, molten iron is added. The fumes generated during this addition are collected by two side draft hoods and captured in a baghouse. The baghouse also captures fumes generated during hot metal transfer, reladling, scrap charging, tapping, and slagging.

Samples were taken from one of the charging fume control dusts with the SASS train. Twenty-four periods of hot metal charging were sampled to obtain a reasonable amount of sample. Since the SASS train was not "cleaned up" (samples recovered) between runs, data for individual charges were not obtained. Also obtained and analyzed was a sample of the dust collected by the baghouse. Results from this sample cannot be compared to the SASS samples since fume from other sources enters the baghouse.

Given in Table 2 are the results obtained for particulates and total organics. The data indicate that about 9 kg (20 lb) of particulate and 0.1 kg (0.2 lb) of organic are produced during each hot metal charge. The data further indicate that the particulate matter is about 900 mg organic per kg of particulate. The organic on the particulate was analyzed by LRMS

TABLE 2. BOF HOT METAL CHARGING PARTICULATE AND ORGANIC SUMMARY

Sample Type	Concentration in Gas mg/Nm^3	Average Generated, kg/Mg Hot Metal Added
A. Particulate		
Probe, cyclone washes	98.6	6.65×10^{-3}
>10 μ cyclone dust	274.0	1.85×10^{-2}
>3 μ cyclone dust	205.8	1.40×10^{-2}
>1 μ cyclone dust	123.9	8.42×10^{-3}
<1 μ dust (filter)	85.1	5.77×10^{-3}
TOTAL:	787.4	5.33×10^{-2}
B. Organic		
All particulates	0.7	4.7×10^{-5}
Organic module	7.9	5.4×10^{-4}
TOTAL:	8.6	5.8×10^{-4}

only because of the small sample obtained (2 mg organic recovered from 2.2 grams particulate). No evidence of PNAs was found.

The SASS organic module sample was more completely analyzed. The predominate categories found were esters, ketones, phosphates, and ethers. There was no evidence of PNAs in the sample. The concentrations found for the categories are not high enough for concern. If the baghouse captured none of the organic (highly unlikely), total emissions of organics from hot metal charging would be less than 0.2 kg (0.4 lb) per hour.

The SASS samples were also analyzed for elemental content. Significantly high concentrations of some metals were found (strontium, selenium, arsenic, copper, chromium, lead, mercury, barium, antimony, and cadmium). High efficiency dust collection is, therfore, needed and proper dust disposal if practiced, essential (Kaiser recycles the dust to the steelmaking process).

The baghouse dust was sampled and analyzed. The elemental analysis confirmed that the concentrations of the above metals are high enough to cause concern if the dust were landfilled. The organic content of the dust was about 540 mg/kg (1.1 lb/ton) dust, predominately high boiling point

material. The organic material is predominately aliphatic and aromatic hydrocarbons. The LRMS analysis indicates as much as 20 percent of the organic may be PNAs. Significant concentrations of chrysene, benzo(a)-pyrene, indeno(1,2,3-cd)pyrene, dibenzanthracene, and dibenzpyrene (carcinogens) are indicated (not proved) by the LRMS analysis.

2.3 BOF OXYGEN BLOWING

After hot metal is charged, oxygen is blown into the vessel (fluxes are also added) to reduce the carbon content and produce steel. At Kaiser, a suppressed combustion system is used and results in gas produced during oxygen blowing with a high (>20 percent) carbon monoxide content. Direct sampling of the gas was not done. The gas produced is cleaned in a scrubber. Samples of the water going to and coming from the scrubber and solids removed from the water treatment clarifiers were obtained and analyzed. The results are given in Table 3.

TABLE 3. BOF OXYGEN BLOWING WATER TREATMENT SAMPLES

Sample Type	In Sample, kg/min Solids	In Sample, kg/min Organic	Net Captured, kg/Mg Steel Processed Solids	Net Captured, kg/Mg Steel Processed Organic
Scrubber discharge water	137	0.36	11	0.004
Recycle water	1.5	0.32		

Primary clarifier solids = About 7.1 mg organic/kg solids.

Secondary clarifier solids = About 66.1 mg organic/kg solids.

The organic matter in the water samples was mostly silicones, ethers, alcohols, ketones and similar compounds. No evidence of PNAs was found. The predominate feature found in the LRMS analysis of both samples was a long chain polymer, probably the polymer used to aid suspended solids removal.

3.0 CONCLUSIONS

1. Fumes generated (before emission control) during external hot metal desulfurization (HMDS) contain about 0.64 kg of particulate and 1×10^{-3} kg of organic per megagram (1.27 and 2×10^{-3} lb/ton, respectively) of metal desulfurized.
2. Organics in the HMDS fume are predominately aliphatic hydrocarbons, ethers, ketones, and esters. A small amount of polynuclear aromatic hydrocarbons (possibly including some carcinogens) was detected. None of the organic category concentrations are high enough to be of environmental concern.
3. Significantly high concentrations of lead, mercury, barium, antimony, strontium, arsenic, copper, manganese and chromium were found in the HMDS fume. It is important that fume collection and baghouse dust collection efficiency be high.
4. Dust captured by the HMDS baghouse is sufficiently high in content of strontium, chromium, and arsenic to be of concern for landfill disposal. (The dust is recycled at the plant tested).
5. Only about 10 percent of the organic matter generated by HMDS is captured by the baghouse.
6. Fume generated (before emission control) during hot metal charging to the basic oxygen furnace (BOF) vessel contain about 5.3×10^{-2} kg of particulate and 5.8×10^{-4} kg of organic per megagram (10.6×10^{-2} and 11.6×10^{-4} lb/ton, respectively) of hot metal charged.
7. Organics in the BOF hot metal charging fume are predominately esters, ketones, and ethers. The concentrations found at this point are not high enough for environmental concern.
8. Significantly high concentrations of strontium, selenium, arsenic, copper, chromium, lead, mercury, barium, antimony, and cadmium were found in the BOF hot metal charging fume. It is important that fume collection and capture efficiency be high.

9. Dust captured by the BOF secondary emissions control baghouse is sufficiently high in content of the metals cited in 8 above to be of concern for landfill disposal. (The dust is recycled at the plant tested.)
10. The organic content of the BOF baghouse dust was about 540 mg/kg (1.1 lb/ton) of dust. As much as 20 percent of the organic could be polynuclear aromatic hydrocarbons, and could include some known carcinogens. This suggests possible environmental problems with the disposal of the dust and indicates testing of the baghouse outlet should be done to determine PNA emissions.
11. About 11 kg of particulate and 0.004 kg of organic per megagram (22 and 0.008 lb/ton, respectively) of steel processed in the BOF is captured by the primary emissions control scrubber during the oxygen blowing period.
12. Organics in the BOF scrubber water were mostly silicones, ethers, alcohols, ketones, and similar compounds. No PNAs were found in the scrubber water, however, a small amount (<1 mg/kg solids) of PNA was found in solids removed from the primary clarifier. None of the organic categories, in either the clarified recycle water or scrubber discharge water, were in sufficient concentration to be of environmental concern.
13. The concentrations of lead, selenium, manganese, copper, and zinc in the clarified water would be of concern if discharged to surface waters. (Total recycle of this water is accomplished at the plant tested.)

4.0 RECOMMENDATIONS

Although organic matter is generated during hot metal desulfurization and the data indicate a substantial fraction (possibly >90 percent) of the organic is not captured by the baghouse, the low concentrations found indicate no additional work in this area is needed. Significantly high concentrations of some metals (including lead, mercury, antimony and arsenic) were found in the fume generated and dust captured. Additional testing, e.g., leaching, may be needed to assess the degree of hazard if the dust is landfilled at some locations rather than recycled as for the plant tested.

The data suggest additional work may be needed to assess BOF secondary fume generating processes (hot metal transfer, scrap charge, tapping, etc.) and possibly emissions from this source. About 100 mg PNA/kg secondary emission control baghouse dust was found but PNAs were not detected in fumes from hot metal charging. Testing should include further analysis of the dust to determine if it constitutes a hazardous waste, testing of each process step to determine which is generating the PNA, and testing of the baghouse outlet to determine if unacceptable amounts of PNA are being released to the environment. Significant amounts of some metals, e.g., arsenic, chromium, lead, antimony, and cadmium, were found in both the hot metal charging fume and in the secondary emissions control baghouse dust.

The data suggest little organic matter is generated during BOF oxygen blowing. No additional testing in this area is recommended. The clarified scrubber water (recycled at the plant tested) contains sufficiently high concentrations of lead, selenium, manganese, copper, and zinc to present problems if discharged to surface waters. More accurate quantitation of the concentrations and masses generated may be needed for plants where the water is discharged rather than recycled.

The appropriate EPA offices should be advised of these results.

5.0 HOT METAL DESULFURIZATION

Testing was conducted at this facility to determine the amounts and types of organic and inorganic matter generated during the external (to the blast furnace) desulfurization of molten metal. The dust collected by the fabric filter system was also analyzed to determine if equal capture of all components occur or if fractionation occurs.

5.1 DESCRIPTION OF FACILITY

Molten metal produced in the blast furnace is cast into torpedo railcars. If the sulfur content of the metal exceeds desirable levels for specific further processing, the railcars are moved to the hot metal desulfurization station (HMDS). Calcium carbide (CaC_2) and calcium carbonate ($CaCO_3$) are blown into the molten metal to reduce the sulfur content.

Figure 1 is a schematic showing the basic operation of the system. Nitrogen, from a nearby air separation plant, is brought into the system and oil contained in the gas is removed. The amount of oil separated or remaining in the nitrogen could not be determined. The amounts of CaC_2 and $CaCO_3$ determined to be necessary for the desulfurization of each torpedo car are transferred from the main storage hoppers to the charge hoppers. The splash shield is lowered into position and the lance lowered into the molten metal. Nitrogen, which is used to blanket the storage and feed hoppers, picks up the calcium compounds released from the feed hoppers and carriers it into the hot metal. The combination of chemical reaction and agitation caused by the nitrogen gas flow, mixes the reactants into the molten metal for uniform desulfurization. Depending on the sulfur content and the amount of metal in the torpedo car, this initial reaction period may take from 5 to 30 minutes. After the reactants are blown into the metal, the lance is raised and the metal sampled and analyzed for sulfur. Occasionally the sulfur content is still not low enough and a second reaction period is

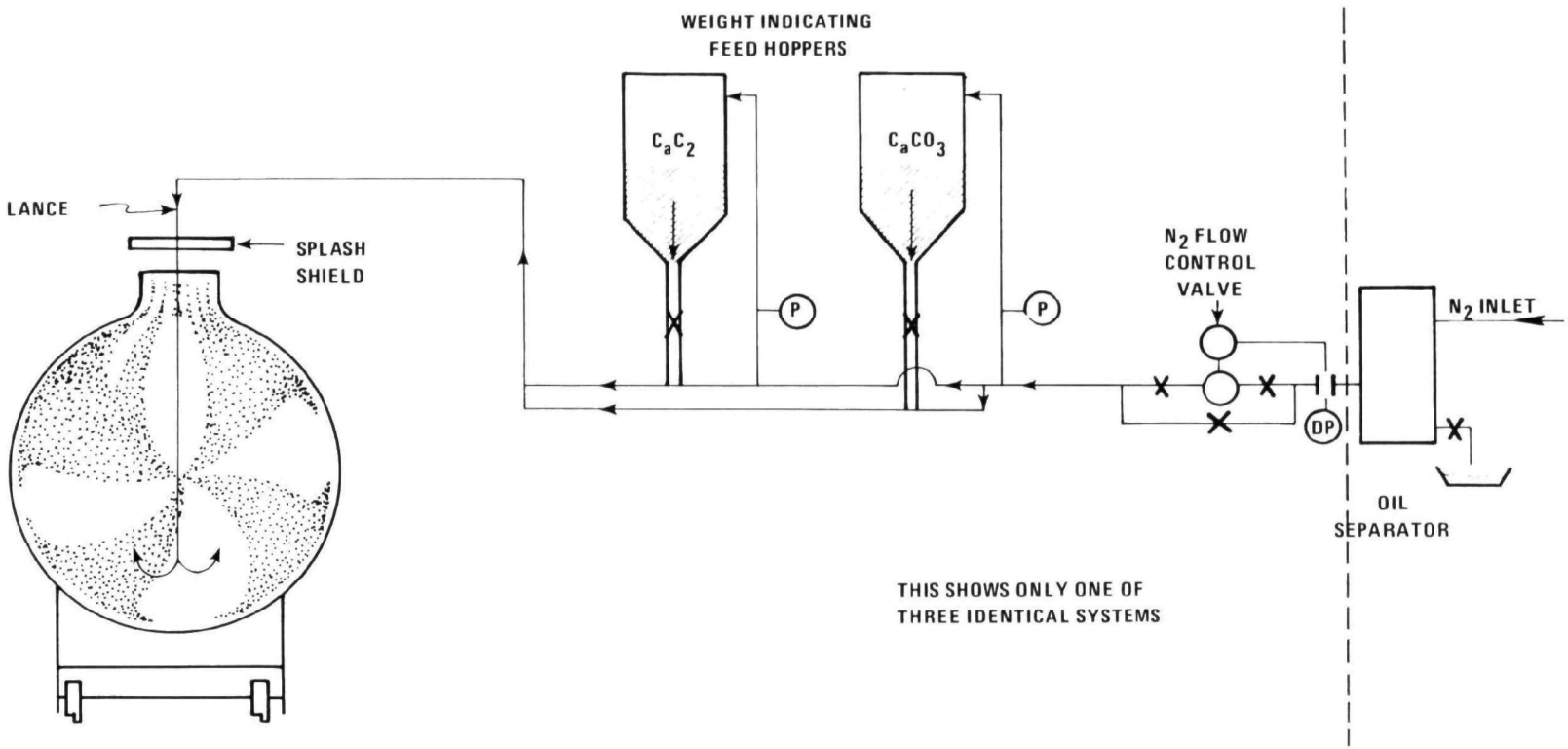

Figure 1. HMDS reagent addition system.

initiated. Desulfurization of one, two, or three railcars can be done at one time.

Shown in Figure 2 is the fume control system for the hot metal desulfurization. The torpedo cars, either one, two or three, are located in the HMDS shed. The shed is open on both ends (a small amount of chain curtain is used but it covers less than 1/3 of the opening). The shed is also open, from ground level to the top of the torpedo cars, on the side away from the control pulpit. Side draft take-off ducts are located at the top of each torpedo car. All ducts are fully open even when only one car is being desulfurized. Originally each duct had a damper which could be closed when not in use, but they were removed after continuing serious maintenance problems. The three offtakes merge into a single duct which extends outside the building. A second duct (from the dekishing station) joins the first duct. The dekishing duct can be closed off with a damper. The duct then separates into two ducts, each with a suction fan. The fans discharge into a baghouse (six compartments). Dust collected by the baghouse is conveyed to a single discharge point and deposited into a small hopper. The hoppers are replaced as required.

5.2 TEST DESCRIPTION

Samples were taken of the gas in the duct before the fans (and emission control equipment) using the Source Assessment Sampling System (SASS) and of the dust collected by the baghouse (taken from the solids hopper). For exact sampling points see Figure 2.

The SASS train samples about 0.11 m^3 (4 cubic feet) of gas during each minute of sampling. Since the hot metal desulfurization lasts about 15 minutes, only about 1.7 m^3 (60 cubic feet) of gas can be collected in a single sampling period. Therefore, to collect a sufficient volume of sample, samples of four desulfurizations over a period of two days were taken. The SASS impinger solutions were recovered at the end of each day and fresh solutions used each day. The rest of the SASS system was sealed (filter changes made as required) between runs. For each test period, the SASS probe was inserted into the duct when the HMDS lance was lowered into the torpedo car and desulfurization begun. Sampling was stopped simultaneously with termination of desulfurization.

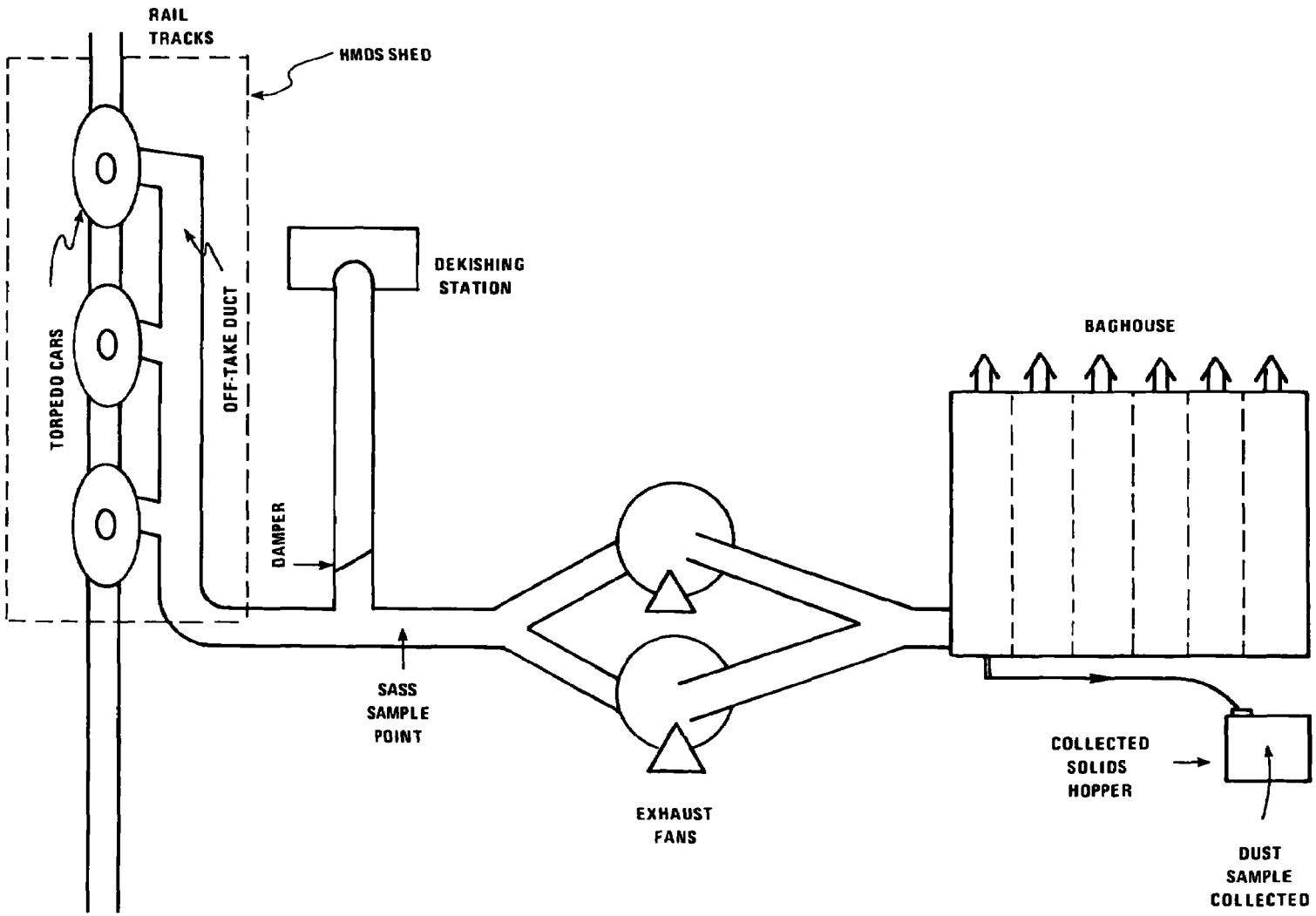

Figure 2. HMDS emission control system.

An empty baghouse dust collecting hopper was put in place on the morning of February 28, 1980. A grab sample of about 0.5 liters (one pint) was taken from about 100 mm (4 inches) below the dust surface late in the afternoon.

As general observations during the test, the following were noted. Collection of fumes appeared to be quite good. Some fume did escape the system when metal was splashed out of the torpedo car (by N_2 gas injected through the lance). Some fume could be seen leaving one of the six stacks on the baghouse (estimated opacity about 10 percent) during the desulfurization. Fewer torpedo cars than normal were being desulfurized at the HMDS because of reduced production of hot metal and low sulfur content of hot metal produced by the blast furnace.

Given in Table 4 are the process data collected for the four periods of SASS sampling. It should be noted that three cars were being simultaneously desulfurized in three of these runs but that only one car was desulfurized in run 4. This is a normal situation since the HMDS system is designed to handle from 1 to 3 cars at one time. Since the exhaust ducts are open to all three stations even when only one car is being desulfurized, the gas concentrations will be somewhat less than if sampling had occurred only when three cars were being desulfurized. However, this mode of operation should have no effect on calculations related to total mass of hot metal processed.

5.3 TEST RESULTS

On-Site Results

Given in Table 5 is the reduced data taken with the SASS train.

Particulates

Particulates collected by the HMDS fume control system were captured in four size fractions by the SASS train. These data are given in Table 6. It should be noted that these results are for particulates in the gas before emission control and do not represent emissions from the baghouse.

The total particulate concentration in the collected gas was 6250.9 mg/Nm^3. About half of the particulate falls in the 10 micron and greater size fraction. There is a uniform decrease in concentration of about 50 percent in each of the succeedingly smaller size fractions.

TABLE 4. HMDS PROCESS DATA

Run No.	Torpedo	Station	Time			Sulfur, %		Reagent Added, kg		N_2 Flow Rate Nm^3/min	Hot Metal Mg
			Start	Stop	Elapsed, min	Initial	Final	CaC_2	$CaCO_3$		
1	5	A	9:55a	10:08	11:41	0.065	0.009	466.7	20.9	5.9	100
2/27/80	25	B	9:55	10:13	15:14	0.065	0.001	493.1	41.3	5.5	109
	15	C	9:55	10:13	15:12	0.068	0.001	519.8	37.2	5.4	91
2	18	A	3:17p	3:29	10:40	0.071	0.030	379.2	21.3	5.9	113
	16	B	3:17	3:28	9:58	0.067	0.013	354.7	29.9	5.5	113
2/27/80	9	C	3:17	3:28	9:58	0.066	0.022	328.9	28.1	5.4	109
3	11	A	1:35p	1:44	8:24	0.051	0.001	445.4	20.4	5.9	104
	9	B	1:35	1:45	9:30	0.046	0.023	423.7	34.9	5.5	95
2/28/80	20	C	1:35	1:44	9:00	0.049	0.000	497.1	26.8	5.4	109
4 2/28/80	12	C	2:16	2:23	6:54	0.051	--	245.4	19.5	5.4	113

TABLE 5. SASS TEST DATA, HOT METAL DESULFURIZATION

Date of Test: 2/27/80 and 2/28/80		
Volume of Gas Sampled:	4.38 Nm^3[a]	154.692 dscf[a]
Stack Gas, Temperature[b]	87.8°C	190°F
Pressure[b]	72.95 cm Hg	28.72 in Hg
Moisture[b]	0.7 %	
Velocity[c]	17.0 meter/sec	55.7 ft/sec
Flow Rate[b]	2440.6 Nm^3/min	86,190 dscfm
Molecular Weight, Dry	28.84	
Molecular Weight, Wet	28.76	
Total Sampling Time	44.1 minutes	
SASS Train Flow Rate	0.99 Nm^3	3.5 dscfm
% Isokinetic	75 %	

[a]20°C (68°F), 76.0 cm Hg (29.92 in. Hg).

[b]Based on velocity and temperature traverse of entire duct using pitot tube rake.

[c]Based on single point SASS train measurement.

TABLE 6. PARTICULATES IN HMDS BAGHOUSE INLET GAS STREAM

Sample Point - In duct upstream of emission control system.

Volume of Gas Sampled - 4.380 Nm^3 (154.692 dscf)

Total Gas Flow Rate in Duct - 2440.6 Nm^3/min (86,190 dscfm)

Total Gas Desulfurized - 1057 Mg (1165 tons)

Sample Type	Weight Collected, gms	Concentration mg/Nm^3	Particulate Generated+ per Mg Steel Desulfurized, kg
Probe, cyclone washes	0.7703	175.9	0.018
>10 μ cyclone	13.6776	3,122.7	0.318
>3 μ cyclone	7.6831	1,754.1	0.179
>1 μ cyclone	3.9418	900.0	0.092
<1 μ filters	1.3061	298.2	0.030
TOTALS:	27.3789	6,250.9	0.637

+Calculation Method: Concentration, kg/Nm^3 x Total gas flow, Nm^3/min x Total sampling time, min ÷ Mg steel desulfurized. Example:

$(175.9 \times 10^{-6})(2440.6)(44.1) \div 1057 = 0.018$ kg/Mg steel.

Also included in Table 6 is an estimate of the amount of particulate generated in each size fraction per megagram of steel desulfurized. This was calculated as follows. The average total flow rate in the duct was determined by temperature and velocity traverses of the duct to be 2440.6 Nm^3/min (86,190 dscfm). Total SASS sampling time was 44.1 minutes (actual maximum desulfurization time from the plant records, Table 5, is 42.3 minutes). The effect of sampling somewhat longer than the process was operating is to make the measured particulate concentration in the gas slightly lower than actually occurring during the desulfurization. To calculate the amount of particulate generated per megagram of steel processed, the time of sampling rather than process time must be used to compensate for the lower measured particulate concentration. The total amount of steel desulfurized in the four runs was 1057 megagrams (1165 tons). The calculation method then is to multiply the particulate concentration in the gas (in kg/Nm^3) by the product of duct gas flow (Nm^3/min) and total sampling time and divide the result by the total megagrams of steel desulfurized. For example, calculations for the >10 micron fraction are: $(3122.7 \times 10^{-6}$ kg/$Nm^3)/(2440.6$ Nm^3/min)(44.1 min) ÷ 1057 Mg steel = 0.318 kg/Mg steel.

Organics

The total amount of organic captured by the SASS train and the calculated amount generated per megagram of steel desulfurized is given in Table 7. The calculation method is the same as given above. The total organic concentration in the collected gas was 9.9 mg/Nm^3. Of this 20.7 percent was TCO (low boiling point material) and 79.3 percent was GRAV (high boiling point material). About 38.4 percent of the total organic captured was found in the particulates. Of the organic on the particulate, 77.8 percent was GRAV material. It should be noted, however, that since the SASS cyclones and filters were maintained about 204°C (400°F), substantially above the duct gas temperature, some of the organic originally on the particulates may have been volatilized and collected in the organic module. As collected, the particulates were 475 mg GRAV organic and 135 mg TCO organic, respectively, per kg of particulate collected (160 mg total organics per kg of particulate.) The data will be useful for comparison to the organics found in the collected baghouse dust which is discussed later in this section.

TABLE 7. ORGANICS IN HMDS BAGHOUSE INLET GAS STREAM

Sample Point - In duct upstream of emission control system.

Volume of Gas Sampled - 4.380 Nm^3 (154.692 dscf)

Total Gas Flow in Duct - 2440.6 Nm^3/in (86,190 dscfm)

Total Steel Desulfurized - 1057 Mg (1165 tons)

Sample Type	Weight Collected, mg TCO	GRAV	Total	Concentration mg/Nm^3	Organic Generated per Mg Steel Desulfurized, kg
Cyclones and filter dust	3.7	13.0	16.7	3.8	3.87×10^{-4}
Organic module	5.3	21.5	26.8	6.1	6.21×10^{-4}
TOTAL:	9.0	34.5	43.5	9.9	1.01×10^{-3}

Inorganics

The SASS train catches were analyzed for inorganics by spark source mass spectroscopy (SSMS) and for mercury (Hg), arsenic (As), and antimony (Sb) by atomic absorption spectroscopy (AAS). The front half catches (all particulates) were combined (in the same proportion as collected) before analysis.

Given in Tables 8 and 9 are the results, calculated as concentration in the HMDS gas, for the individual samples analyzed. These data are summed in Table 10 to give the total concentration in the HMDS gas (before emission control).

The original SSMS data are in Appendix D.

Level 1 Organic Categorization

The front half catches (all particulates) were combined and extracted with methylene chloride. The extracts were concentrated and analyzed for TCO and GRAV organics. These data are used for total organics reported in a previous subsection). The extract was then fractionated into seven fractions by liquid chromatography (LC). Each fraction was analyzed for TCO and GRAV organics. Most fractions were analyzed by IR. Fraction 3 was also analyzed by LRMS. The concentrations of each organic category in each LC fraction were assigned based on the IR and LRMS intensities found. The data are summarized in Table 11. The original LC, IR, and LRMS data are in the Appendices.

The SASS particulates contained only aliphatic hydrocarbons, silicones, phosphates, ketones, and esters. None of the organics are in sufficiently high concentrations to be of concern. There was not evidence of polynuclear aromatic hydrocarbons.

The back half of the SASS train was analyzed by combining all module and hose rinses (methylene chloride) and using this to extract the XAD-2 resin. The extract was concentrated and analyzed for TCO and GRAV organics. (These data are used for total organics reported in a previous subsection.) The extract was then fractionated by LC and analyzed as described for the front half samples. The data are summarized in Table 12.

TABLE 8. ELEMENTAL COMPOSITION, HMDS-SASS FRONT HALF PARTICULATE

Element	Concentration in Sample mg/kg	Concentration in Gas μg/Nm^3	Element	Concentration in Sample mg/kg	Concentration in Gas μg/Nm^3
Uranium	1	6	Terbium	<0.1	0.6
Thorium	2	12	Gadolinium	0.2	1
Bismuth			Europium	0.1	0.6
Lead	21	131	Samarium	0.8	5
Thallium			Neodymium	1	6
Mercury	0.04*	0.3	Praseodymium	1	6
Gold			Cerium	8	50
Platinum			Lanthanum	8	50
Iridium			Barium	140	875
Osmium			Cesium	0.2	1
Rhenium			Iodine	0.2	1
Tungsten			Tellurium	≤0.2	≤1
Tantalum			Antimony	5**	30
Hafnium			Tin	0.4	3
Lutetium			Indium	STD	
Ytterbium			Cadmium		
Thulium			Silver	20**	120
Erbium			Palladium		
Holmium			Rhodium		
Dysprosium	0.3	2			
Ruthenium			Vanadium	6	40
Molybdenum	3	19	Titanium	170	1100
Niobium	0.9	6	Scandium	2	13
Zirconium	8	50	Calcium	MC	MC
Yttrium	4	25	Potassium	MC	MC
Strontium	210	1300	Chlorine	130	810

STD - Internal Standard.
NR - Not Reported.
All elements not detected <0.1 ppm weight (<0.6 μg/Nm^3).
MC - Major Component.
INT - Interference.
* By AAS.
**Heterogeneous.

continued

TABLE 8 (continued).

Element	Concentration in Sample mg/kg	Concentration in Gas µg/Nm^3	Element	Concentration in Sample mg/kg	Concentration in Gas µg/Nm^3
Rubidium	11	70	Sulfur	MC	MC
Bromine	5	30	Phosphorus	220	1400
Selenium	≤0.7	≤4	Silicon	MC	MC
Arsenic	27	170	Aluminum	MC	MC
Germanium	0.3	2	Magnesium	MC	MC
Gallium	0.8	5	Sodium	MC	MC
Zinc	MC	MC	Fluorine	≈200	1300
Copper	26	160	Oxygen	NR	NR
Nickel	8	50	Nitrogen	NR	NR
Cobalt	1	6	Carbon	NR	NR
Iron	MC	MC	Boron	0.4	3
Manganese	>600	>3700	Beryllium	<0.1	<0.6
Chromium	9	600	Lithium	0.7	4
			Hydrogen	NR	NR

STD - Internal Standard.
NR - Not Reported.
All elements not detected <0.1 ppm weight (<0.6 µg/Nm^3).
MC - Major Component.
INT - Interference.
* By AAS.
**Heterogeneous.

TABLE 9. ELEMENTAL COMPOSITION HMDS - SASS IMPINGER

Element	Concentration in Sample μg/ml	Concentration in Gas μg/m^3	Element	Concentration in Sample μg/ml	Concentration in Gas μg/m^3
Uranium			Terbium		
Thorium			Gadolinium		
Bismuth			Europium		
Lead	≤0.01	≤2.5	Sumarium		
Thallium			Neodymium		
Mercury	0.09*	22	Praseodymium		
Gold			Cerium		
Platinum			Lanthanum	≤0.01	≤2.5
Iridium			Barium	≤0.03	≤7.5
Osmium			Cesium		
Rhenium			Iodine	≤0.003	≤0.75
Tungsten			Tellurium		
Tantalum			Antimony		
Hafnium			Tin		
Lutetium			Indium	STD	
Ytterbium			Cadmium		
Thulium			Silver	0.01	2.5
Erbium			Palladium		
Holmium			Rhodium		
Dysprosium					
Ruthenium			Vanadium	<0.001	<0.3
Molybdenum	0.07	17	Titanium	0.09	22
Niobium			Scandium	<0.001	<0.3
Zirconium	0.008	2	Calcium	7	1740
Yttrium			Potassium	0.4	99
Strontium	0.01	2.5	Chlorine	0.1	25
Rubidium	<0.001	<0.3	Sulfur	4	990

STD - Internal Standard
NR - Not Reported
All elements not detected <0.002 μg/ml (<0.5 μg/m^3).
MC - Major Component.
INT - Interference.
*

continued

TABLE 9 (continued).

Element	Concentration in Sample µg/ml	Concentration in Gas µg/m^3	Element	Concentration in Sample µg/ml	Concentration in Gas µg/m^3
Bromine	0.1	25	Phosphorus	1	250
Selenium			Silicon	2	500
Arsenic			Aluminum	0.1	25
Germanium			Magnesium	0.1	25
Gallium			Sodium	0.7	170
Zinc	0.1	25	Fluorine	≈0.4	≈99
Copper	0.1	25	Oxygen	NR	NR
Nickel	0.3	7.5	Nitrogen	NR	NR
Cobalt	0.007	1.7	Carbon	NR	NR
Iron	0.6	150	Boron	0.006	1.5
Manganese	0.006	1.5	Beryllium		
Chromium	0.01	2.5	Lithium	<0.001	<0.3

STD - Internal Standard.
NR - Not Reported.
All elements not detected <0.002 µg/ml (<0.5 µg/m^3).
MC - Major Component.
INT - Interference.

TABLE 10. TOTAL ELEMENTAL COMPOSITION IN HMDS GAS, BEFORE EMISSION CONTROL

Element	Concentration μg/m^3	Element	Concentration μg/m^3	Element	Concentration μg/m^3	Element	Concentration μg/m3
Uranium	6	Terbium	0.6	Ruthenium		Vanadium	40
Thorium	12	Gadolinium	1	Molybdenum	36	Titanium	1100
Bismuth		Europium	0.6	Niobium	6	Scandium	13
Lead	≤134	Samarium	5	Zirconium	52	Calcium	1740$^+$
Thallium		Neodymium	6	Yttrium	25	Potassium	99$^+$
Mercury	22	Praseodymium	6	Strontium	1300	Chlorine	830
Gold		Cerium	50	Rubidium	70	Sulfur	990$^+$
Platinum		Lanthanum	≤53	Bromine	55	Phosphorus	1600
Iridium		Barium	≤880	Selenium	≤4	Silicon	500$^+$
Osmium		Cesium	1	Arsenic	170	Aluminum	25$^+$
Rhenium		Iodine	≤8.5	Germanium	2	Magnesium	25$^+$
Tungsten		Tellurium	≤1	Gallium	5	Sodium	170$^+$
Tantalum		Antimony	30	Zinc	25$^+$	Fluorine	≈1400
Hafnium		Tin	3	Copper	185	Oxygen	NR
Lutetium		Indium	STD	Nickel	58	Nitrogen	NR
Ytterbium		Cadmium		Cobalt	8	Carbon	NR
Thulium		Silver	123	Iron	150$^+$	Boron	4.5
Erbium		Palladium		Manganese	>3700	Beryllium	<0.6
Holmium		Rhodium		Chromium	63	Lithium	4
Dysprosium	2					Hydrogen	NR

$^+$Major component of one sample.
NR - Not Reported.
All elements not detected <0.5 μg/m^3.

TABLE 11. ORGANIC EXTRACT SUMMARY TABLE, SASS PARTICULATE, DESULFURIZATION

	LC1	LC2	LC3	LC4	LC5	LC6	LC7	Σ
Total Organics, mg/m^3	0.7	0.1	0.3	0	0	0.5	0.9	2.4
TCO, mg/m^3	0	0.1	0	0	0	0.2	0	0.3
GRAV, mg/m^3	0.7	0	0.3	0	0	0.3	0.9	2.1
Category	Assigned Intensity - $mg/(m^3, \cancel{L})$							
Aliphatic Hydrocarbons	100/0.35+	100/0.05		QNS*	QNS*		QNS*	0.4
Halogenated Aliphatics								
Aromatic Hydrocarbons								
Halogenated Aromatics								
Silicones	100/0.35	100/0.05	100/0.3					0.7
Heterocyclic O Compounds								
Nitroaromatics								
Ethers								
Aldehydes								
Phosphates						100/0.17		0.17
Nitriles								
Heterocyclic N Compounds								
Heterocyclic S Compounds								
Alcohols								
Phenols								
Ketones						100/0.17		0.17

(Continued)

*Quantity Not Sufficient.

+The data are presented as assigned intensity (from IR and/or LRMS)/concentration.

TABLE 11. ORGANIC EXTRACT SUMMARY TABLE, SASS PARTICULATE, DESULFURIZATION

Category	Assigned Intensity - mg/(m^3, %)							
Amines								
Alkyl S Compounds								
Sulfuric Acids								
Sulfoxides								
Amides								
Carboxylic Acids								
Esters						100/0.17		0.17

*Quantity Not Sufficient.

TABLE 12. ORGANIC EXTRACT SUMMARY TABLE, DESULFURIZATION - SASS ORGANIC MODULE

	LC1	LC2	LC3	LC4	LC5	LC6	LC7	Σ
Total Organics, mg/m^3	0.6	0.9	0.3	0.1	0.4	2.2	0	4.6
TCO, mg/m^3	0	0	0.3	0.1	0.2	0.4	0	1.0
GRAV, mg/m^3	0.6	0.9	0	0	0.2	1.8	0	3.6

Category	Assigned Intensity - $mg/(m^3, \cancel{L})$							
Aliphatic Hydrocarbons	100/0.6	100/0.9					QNS*	1.5
Halogenated Aliphatics		1/0.01						0.01
Aromatic Hydrocarbons		1/0.01	10/0.25					0.26
Halogenated Aromatics		1/0.01	1/0.03					0.04
Silicones								
Heterocyclic O Compounds			1/0.03					0.03
Nitroaromatics								
Ethers				100/0.1	100/0.13	100/2.2		2.43
Aldehydes								
Phosphates								
Nitriles								
Heterocyclic N Compounds								
Heterocyclic S Compounds								
Alcohols								
Phenols								
Ketones					100/0.13			0.13

(Continued)

*Quantity Not Sufficient.

TABLE 12. ORGANIC EXTRACT SUMMARY TABLE, DESULFURIZATION-SASS ORGANIC MODULE

Category	Assigned Intensity - mg/(m^3, L)							
Amines								
Alkyl S Compounds								
Sulfuric Acids								
Sulfoxides								
Amides								
Carboxylic Acids								
Esters					100/0.13			0.13

*Quantity Not Sufficient.

The organics found were predominately ethers and aliphatic hydrocarbons. There is evidence of polynuclear aromatic hydrocarbons in LC fraction 3. The masses identified by LRMS, M/es of 276, 278, and 300, could be the carcinogens indeno(1,2,3-cd)pyrene, dibenzanthracene, and coronene, respectively. The concentrations are estimated to be quite low and probably of little environmental concern.

Baghouse Collected Dust

A sample of the dust captured by the HMDS baghouse was collected and analyzed for organics. The dust, 257.07 grams, was extracted with methylene chloride and TCO and GRAV organics determined. TCO organics were 5.3 mg and GRAV organics were 21.5 mg. Therefore, the dust contained 20.6 mg TCO organics and 83.6 mg GRAV organics per kg of dust (104.3 mg total organics per kg of dust). The results are substantially lower than that found in the gas stream before the baghouse (1590 mg/kg particulate). They are also substantially lower than the concentrations found on the SASS particulate (610 mg/kg particulates--see previous section on particulates). These data suggest that about 93 percent of the organic (94 percent of the TCO and 93 percent of the GRAV) generated in the desulfurization are not captured by the baghouse. Simultaneous testing at the baghouse inlet and outlet would be required to prove this. The mass emitted from the baghouse, based on this data, would be 363 mg TCO, 580 mg GRAV, or 943 mg total organics for each Mg of steel desulfurized.

The baghouse dust extract was fractionated and each fraction analyzed for organic categorization. The organic contained in the dust is predominately aliphatic hydrocarbons, ketones, esters, and ethers. Evidence of polynuclear aromatic hydrocarbons was found in LC fraction 3. The mass identified at M/es of 228 and 252, could be carcinogens chrysene and benzo(a)pyrene, respectively. The concentration of these materials in the dust is probably not sufficient to cause concern. The data are summarized in Table 13. The IR, LRMS, and LC data are in the Appendices.

The baghouse dust was also analyzed for elemental composition by SSMS and AAS. The results are in Table 14. Elevated concentrations of strontium, chromium, and arsenic could create some problem if the material were landfilled.

TABLE 13. ORGANIC EXTRACT SUMMARY TABLE, DESULFURIZATION BAGHOUSE DUST

	LC1	LC2	LC3	LC4	LC5	LC6	LC7	Σ
Total Organics, mg/kg	31.1	8.9	12.4	5.8	8.6	16.3	10.5	93.7
TCO, mg/kg	4.3	1.2	2.3	0.4	1.9	3.1	0.4	13.6
GRAV, mg/kg	26.8	7.7	10.1	5.4	6.7	13.2	10.1	80.1

Category	Assigned Intensity - mg/kg							
Aliphatic Hydrocarbons	100/31.1	QNS+						31.1
Halogenated Aliphatics								
Aromatic Hydrocarbons			100/4.1					4.1
Halogenated Aromatics			1/0.04					0.04
Silicones			100/4.1	100/1.2				5.3
Heterocyclic O Compounds								
Nitroaromatics								
Ethers			100/4.1	100/1.2	10/2.9			8.2
Aldehydes								
Phosphates				100/1.2				1.2
Nitriles								
Heterocyclic N Compounds								
Heterocyclic S Compounds								
Alcohols								
Phenols								
Ketones				100/1.2	10/2.9	100/8.1	100/3.5	15.7

(Continued)

*Quantity Not Sufficient.

TABLE 13. ORGANIC EXTRACT SUMMARY TABLE, DESULFURIZATION BAGHOUSE DUST

Category	Assigned Intensity - mg/(m^3, L)							
Amines								
Alkyl S Compounds								
Sulfuric Acids								
Sulfoxides							100/3.5	3.5
Amides								
Carboxylic Acids								
Esters				100/1.2	10/2.9	100/8.1	100/3.5	15.7

*Quantity Not Sufficient.

TABLE 14. ELEMENTAL ANALYSIS OF HMDS BAGHOUSE DUST

Concentration in mg/kg

Element	Concentration	Element	Concentration	Element	Concentration	Element	Concentration
Uranium	2	Terbium		Ruthenium		Vanadium	21
Thorium	2	Gadolinium		Molybdenum	4	Titanium	730
Bismuth	0.9	Europium		Niobium	3	Scandium	0.8
Lead	110	Samarium	0.7	Zirconium	9	Calcium	MC
Thallium		Neodymium	2	Yttrium	5	Potassium	MC
Mercury	0.07*	Praseodymium	0.7	Strontium	230	Chlorine	790
Gold		Cerium	8	Rubidium	12	Sulfur	MC
Platinum		Lanthanum	6	Bromine	10	Phosphorus	MC
Iridium		Barium	150	Selenium	≤2	Silicon	MC
Osmium		Cesium	0.7	Arsenic	58	Aluminum	MC
Rhenium		Iodine	26	Germanium	0.3	Magnesium	MC
Tungsten		Tellurium		Gallium	2	Sodium	MC
Tantalum		Antimony	1	Zinc	MC	Fluorine	≈220
Hafnium		Tin	1	Copper	42	Oxygen	NR
Lutetium		Indium	STD	Nickel	12	Nitrogen	NR
Ytterbium		Cadmium		Cobalt	3	Carbon	NR
Thulium		Silver	1	Iron	MC	Boron	1
Erbium		Palladium		Manganese	MC	Beryllium	<0.1
Hofmium		Rhodium		Chromium	16	Lithium	0.8
Dysprosium						Hydrogen	NR

STD - Internal Standard.
NR - Not Reported.
All elements not detected <0.1 ppm weight.
MC - Major Component.
INT - Interference.
*By AAS.

6.0 BASIC OXYGEN FURNACE

Testing was conducted at this facility to determine the amounts and types of organic and inorganic matter generated during addition of hot metal to the basic oxygen furnace (BOF), to determine the composition of dusts collected by the baghouse used to collect all BOF secondary emissions, and to obtain data on possible pollutants generated during the oxygen blow period.

6.1 DESCRIPTION OF FACILITY

This BOF shop contains two vessels, each rated at about 227 Mg (250 tons) per heat. Normally 6 to 8 heats can be completed on each vessel in an 8-hour shift. However, during these tests only one vessel was being operated consistently. Figure 3 is a schematic of the BOF system. Schematics of the emission control systems are given in Figures 4 and 5.

The BOFs are of the suppressed combustion type. During the oxygen blow, insufficient air is drawn into the primary hood to achieve a complete combustion of the furnace gas. The lower gas temperature results in less thermal shock to the primary hood.

As illustrated in the figures, each vessel is in a separate enclosure and is connected to separate gas collecting and capture systems. (Some parts of the systems are common to both). Each gas collecting system is composed of two major subsystems. The primary system collects gas during the oxygen blow (primary hood and scrubber). The secondary system collects fumes generated during scrap and hot metal additions, tapping, slagging, and when the vessel is idle. The secondary hoods can be closed off to provide increased draft to individual hoods in this system. All fume collected by the secondary system goes to a single baghouse.

At the start of a heat, the enclosure doors are opened and the vessel tilted toward the charging aisle. Scrap metal is charged into the vessel.

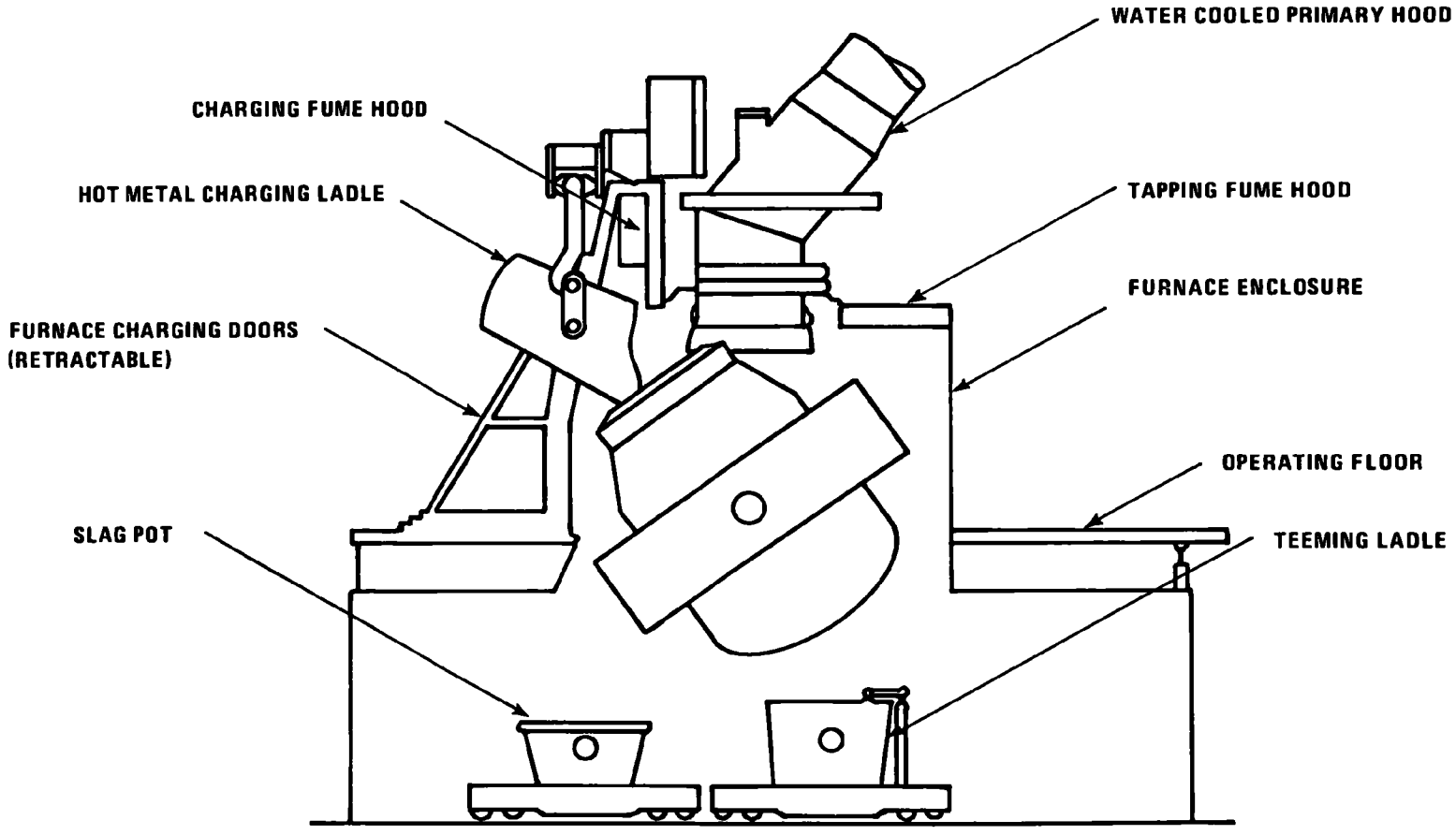

Figure 3. Schematic of BOF vessel.

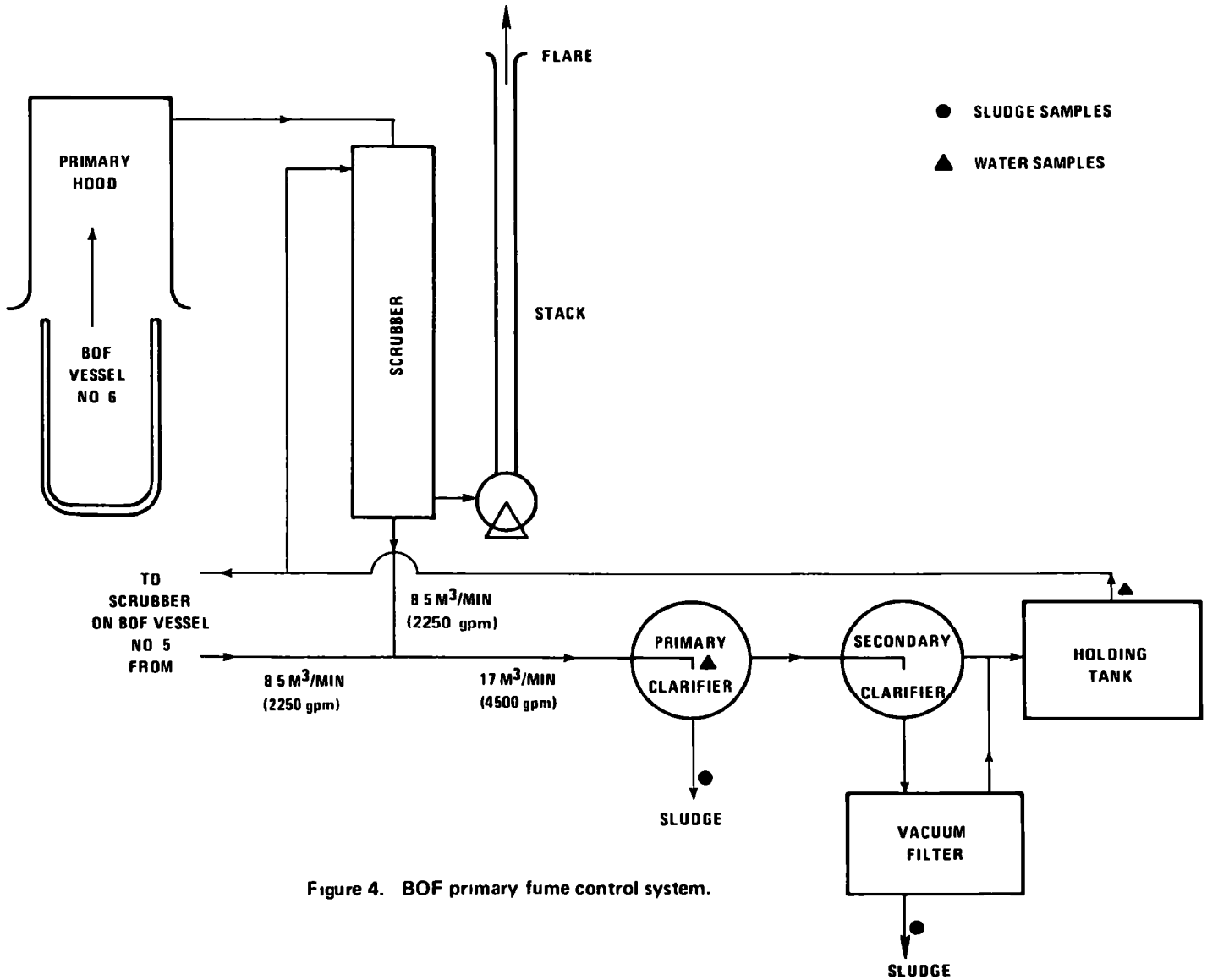

Figure 4. BOF primary fume control system.

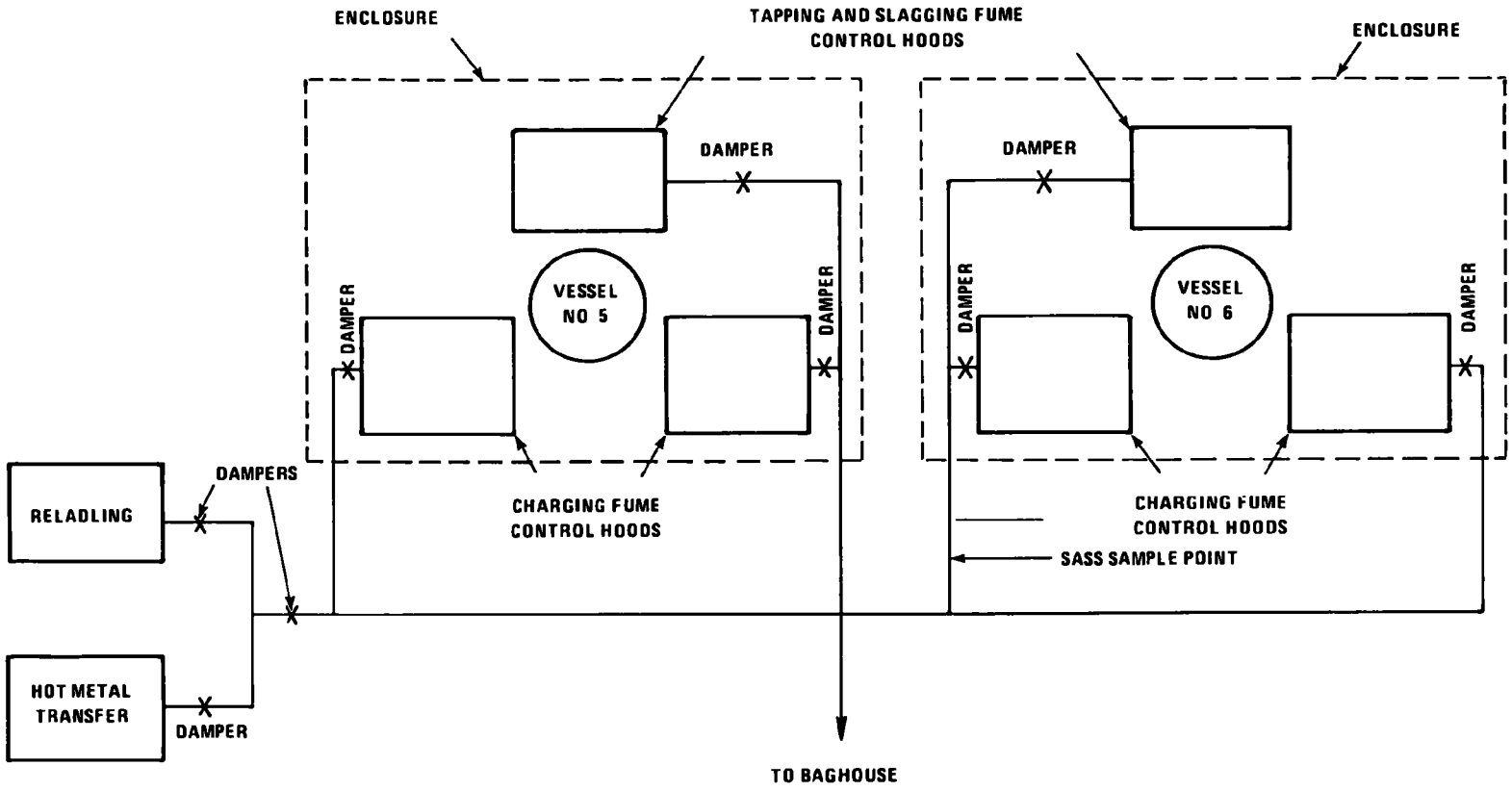

Figure 5. BOF shop secondary fume control system.

The scrap is a combination of purchased and recycled plant metal. Hot metal, if available, is then added to the vessel. The hot metal ladle is sufficiently large that only one addition is required. All of the hot metal is added to the vessel in about 1 minute. During scrap and hot metal additions, the damper to the slagging secondary damper is closed and all fume is collected by the hoods on the charging aisle side of the BOF enclosure.

As the hot metal ladle is withdrawn, the enclosure doors are closed and the vessel returned to an upright position. The oxygen lance is lowered and the blow initiated. After the blow is completed, the vessel is turned down, the enclosure doors slightly opened, and a probe inserted to measure the metal temperature. If the temperature is correct, a sample of the metal is withdrawn for analysis. The vessel is now ready to be tapped (withdraw the metal). The vessel is rotated toward the tapping aisle and the metal poured out of a hole in the side of the vessel into a ladle on the lower floor. Additional materials are added to the ladle to obtain the desired chemical composition. The vessel is then rotated further and slag in the vessel dumped into the slag car. The vessel is now ready to receive the next scrap charge.

During the oxygen blow period, all fumes and gas generated are collected by the primary hood. The gases are cleaned in a scrubber (tray tower) that has a pressure drop of about 15 cm Hg (80 inches of water). The wastewater, 8.5 m^3/min (2250 gpm) from each of the two scrubbers, flows to a primary clarifier where heavy solids are removed by sedimentation. The overflow from the clarifier flows to a second clarifier where a polyelectrolyte (to aid in flocculation) is added. Solids removed from this clarifier are thickened by a vacuum filter. The clarified water is recycled to the scrubbers. There is no wastewater discharge from the system other than water contained with the solids and water vapor and mist in the scrubber stack gas discharge. Make-up water is added as needed to replace these losses.

6.2 BOF HOT METAL CHARGING TEST DESCRIPTION

Samples were taken in the duct leading from the west side charging fume control hood of BOF vessel No.6 (see Figure 5 for sample point). Sampling

occurred only during the approximately 1 minute period of hot metal charging. Twenty-four separate periods of hot metal addition were sampled in the five days of sampling. Multiple sampling periods were necessary to collect a reasonable quantity of gas since the SASS system collects only 0.11 m^3 (4 ft^3) per minute. The SASS impinger solutions 2 and 3 were recovered at the end of each day of sampling. The rest of the SASS system was sealed between sampling runs. For each test period, the SASS probe was inserted into the duct when the hot metal ladle was moved into charging position. The pumps were turned on and collection of gas begun simultaneously with the beginning of the hot metal charge. Sampling was stopped simultaneously with the end of the hot metal addition. An observer was stationed in a position to observe the hot metal addition and alert the SASS operator to the beginning and end of hot metal addition. Because of interlocks in the BOF secondary emission control system, no gas flow occurs from the slagging fume control hood during hot metal charging.

Given in Table 15 are the process data collected. The amounts of both total scrap and hot metal charged for each of the 24 heats sampled are given. Also given is the average amount per heat. Given at the bottom of this table is the total amount of each scrap type charged and the average amount charged per heat. Although some of most scrap types were charged for each heat, no cast was added after SASS Run No.10 and molds/stools were added only in Runs 12-24.

6.3 BOF HOT METAL CHARGING TEST RESULTS

On-Site Results

Given in Table 16 are the sampling data collected with the SASS train. Note that the sampling was done for only 1 of the 2 charging ducts. Therefore, to calculate total gas flow, and total mass in the charging fume, the SASS results are multiplied by 2.

Particulates

Particulates collected by the hot metal charging fume control system were captured in four size fractions by the SASS train. These data are given in Table 17. It should be noted that the data are for particulates

TABLE 15. BOF CHARGING PROCESS DATA

SASS Run No.	BOF Heat No.	Scrap Charged, Mg	Hot Metal Charged, Mg
1	616673	71.49	163.29
2	616174	61.64	169.64
3	616175	57.61	173.27
4	616176	62.78	166.97
5	616177	52.84	181.44
6	616178	62.78	167.83
7	616179	68.95	161.03
8	616191	57.38	166.92
9	616193	63.59	161.12
10	616194	66.18	163.75
11	616195	57.70	166.74
12	616196	58.97	170.10
13	616203	64.95	167.06
14	616204	58.51	172.09
15	616205	65.95	166.83
16	616206	60.33	171.46
17	616207	53.80	176.27
18	616208	59.56	172.37
19	616223	65.14	168.46
20	616224	64.50	165.56
21	616225	55.25	173.68
22	616226	53.07	179.91
23	616239	55.34	174.91
24	616240	51.35	175.99
Totals:		1,449.66	4,076.69
Average Wt/charge		60.40	169.86

Scrap Type	Total Charged, Mg	Averaged Wt/Charge, Mg
Light	305.7	12.74
A Steel	183.4	7.64
Cast Iron	74.3	3.09
Molds/Stools	100.2	4.17
Heavy	443.9	18.50
Medium	303.8	12.66
Rolls	3.5	0.15
Trim	36.7	1.53
Totals:	1,451.5	60.48

TABLE 16. SASS TEST DATA, BOF HOT METAL CHARGING

Date of Test: 4/8/80 to 4/12/80		
Volume of Gas Sampled:	2.795 Nm^3[a]	98.710 dscf
Stack Gas, Temperature[b]	85.3°C	185.6°F
Pressure[b]	73.43 cm Hg	28.91 in Hg
Moisture[b]	3.68 %	
Velocity[c]	26.5 meter/sec	86.94 ft/sec
Flow Rate[b]	5754.3 Nm^3/min	203,212 dscfm
Flow Rate[b] Both Ducts	11,508.6 Nm^3/min	406,424 dscfm
Molecular Weight, Dry	28.84	
Molecular Weight, Wet	28.44	
Total Sampling Time	24 minutes	
SASS Train Flow Rate	0.116 Nm^3/min	4.11 dscfm
% Isokinetic	115.5 %	

[a]20°C (68°F), 76.0 cm Hg (29.92 in Hg).

[b]Based on velocity and temperature traverse of entire duct using pitot tube rake.

[c]Based on single point SASS train measurement.

TABLE 17. PRE-CONTROL PARTICULATES FROM HOT METAL CHARGING OF BOF

Sample Point - In west duct upstream of emission control system.

Volume of Gas Sampled - 2.795 Nm^3/min (98.710 dscf)

Total Gas Flow in West Duct - 5754.3 Nm^3/min (203,212 dscfm)

Estimated Total Gas Flow, Both Ducts - 11,509 Nm^3/min (406,424 dscfm)

Number of Hot Metal Additions (heats) - 24

Total Hot Metal Added - 4076.69 Mg

Sample Type	Weight Collected, gms	Concentration mg/Nm^3	Particulate Generated* kg/Mg Hot Metal	kg/heat
Probe, cyclone washes	0.2756	98.60	6.65×10^{-3}	1.13
>10 μ cyclone	0.7659	274.03	18.5×10^{-3}	3.15
> 3 μ cyclone	0.5752	205.80	14.0×10^{-3}	2.37
> 1 μ cyclone	0.3462	123.86	8.42×10^{-3}	1.43
< 1 μ filter	0.2380	85.15	5.77×10^{-3}	0.98
TOTALS:	2.2009	787.44	5.33×10^{-2}	9.06

*Calculations: For kg particulate/heat - (mg particulate/Nm^3 x 10^{-6}) x (11,509 Nm^3/min).
Average sampling time for each of the 24 hot metal additions was 1.0 minutes.
For kg particulate/Mg hot metal added - Divide kg particulate/heat by average weight of hot metal charged per heat.

in the gas before emission control and do not represent emissions from the emission control system.

The total particulate concentration in the fume generated by charging hot metal to the BOF was 787.4 mg/Nm^3. Of this 34.8 percent was greater than 10 microns, 26.1 percent was between 3 and 10 microns, 15.7 percent was between 1 and 3 microns, 10.8 percent was less than 1 micron and 12.5 percent, assumed to be of all sizes, was found in the probe and cyclone washes.

Also included in Table 17 are the masses of particulate generated, in each size fraction, calculated on a per heat (one hot metal charge) and on a megagram of hot metal charged basis. These data indicate that about 9 kilograms (about 20 pounds) of particulate is generated during each hot metal charge.

Organics

The total amount of organic captured by the SASS train is given in Table 18. The table also includes the calculated amount of organic generated during the average heat and per megagram of hot metal charged.

The total organic concentration in the collected gas was 8.6 mg/Nm^3. Of this 29 percent was TCO and 71 percent was GRAV. About 8 percent of the total organic collected was found in the particulates and 92 percent was found in the organic module. The particulates contained 900 mg GRAV per kg of particulate collected. These data cannot be compared to results obtained for dust collected by the secondary emission control baghouse because fumes from other sources than hot metal charging enter this baghouse.

Inorganics

The SASS train catches were analyzed for inorganics by SSMS and for Hg, As, and Sb by AAS. The front half catch (all particulates) were combined (in the same proportion collected) before analysis.

Given in Tables 19 and 20 are the results obtained, calculated as concentration of the elements in the gas collected by the SASS train. The data for the individual samples are summed in Table 21 to give the total concentration of the elements in the hot metal charging fumes. The original SSMS data are in Appendix D.

TABLE 18. ORGANICS IN BOF HOT METAL CHARGING FUME

Sample Point - In west duct upstream of emission control system.

Volume of Gas Sampled - 2.795 Nm^3 (98.710 dscf)

Total Gas Flow (East and West Ducts) - 11,509 Nm^3/min (406,424 dscfm)

Number of Heats - 24

Total Hot Metal Charged - 4076.69 Mg

Sample Type	Weight Collected, mg TCO	GRAV	Total	Concentration mg/Nm^3	Organics Generated kg/Mg Hot Metal	kg/heat
SASS front half (probe & cyclone washes & cyclone & filter dusts)	--	2.0	2.0	0.7	4.7×10^{-5}	8×10^{-3}
Organic module	7.1	15.0	22.1	7.9	5.4×10^{-4}	9.1×10^{-2}
TOTAL:	7.1	17.0	24.2	8.6	5.8×10^{-4}	9.9×10^{-2}

TABLE 19. ELEMENTAL ANALYSIS, SASS PARTICULATE, BOF HOT METAL CHARGING

Element	Concentration in Sample mg/kg	Concentration in Gas $\mu g/m^3$	Element	Concentration in Sample mg/kg	Concentration in Gas $\mu g/m^3$
Ruthenium			Vanadium	96	76
Molybdenum	95**	75	Titanium	MC	MC
Niobium	13	10	Scandium	≤0.7	≤0.6
Zirconium	33	26	Calcium	MC	MC
Yttrium	≤3	≤2.4	Potassium	MC	MC
Strontium	20	16	Chlorine	MC	MC
Rubidium	11	9	Sulfur	79	62
Bromine	440	346	Phosphorus	MC	MC
Selenium	62**	49	Silicon	MC	MC
Arsenic	59	46	Aluminum	MC	MC
Germanium	1	0.8	Magnesium	MC	MC
Gallium	42	33	Sodium	MC	MC
Zinc	MC	MC	Fluorine	MC	MC
Copper	230	180	Oxygen	NR	NR
Nickel	45	35	Nitrogen	NR	NR
Cobalt	22	17	Carbon	NR	NR
Iron	MC	MC	Boron	32	25
Manganese	MC	MC	Beryllium		
Chromium	650	512	Lithium	2	2
			Hydrogen	NR	
Uranium	11	9	Terbium		
Thorium	<11	<9	Gadolinium		
Bismuth	4	3	Europium		
Lead	MC	MC	Samarium		
Thallium			Neodymium		
Mercury	1.05*	0.8	Praseodymium		
Gold			Cerium	30**	24

STD - Internal Standard.
NR - Not Reported.
All elements not detected <1 Mg/kg (0.8 $\mu g/m^3$).
MC - Major Component.
INT - Interference.

*Flameless Atomic Absorption.
**Heterogeneous.
NOTE: High detection limit due to limited sample.

continued

TABLE 19 (continued).

Element	Concentration in Sample mg/kg	Concentration in Gas $\mu g/m^3$	Element	Concentration in Sample mg/kg	Concentration in Gas $\mu g/m^3$
Platinum			Lanthanum	11	9
Iridium			Barium	MC	MC
Osmium			Cesium	0.8	0.6
Rhenium			Iodine		
Tungsten			Tellurium	19	15
Tantalum			Antimony	8	6
Hafnium			Tin	23	18
Lutetium			Indium	STD	STD
Ytterbium			Cadmium	93	73
Thulium			Silver	21	17
Erbium			Palladium		
Holmium			Rhodium		
Dysprosium					

STD - Internal Standard.
NR - Not Reported.
All elements not detected <1 Mg/kg (0.8 $\mu g/m^3$).
MC - Major Component.
INT - Interference.
*Flameless Atomic Absorption.
**Heterogeneous.
NOTE: High detection limit due to limited sample.

TABLE 20. ELEMENTAL ANALYSIS, SASS IMPINGER, BOF HOT METAL CHARGING

Element	Concentration in Sample µg/ml	Concentration in Gas µg/m^3	Element	Concentration in Sample µg/ml	Concentration in Gas µg/m^3
Uranium			Terbium		
Thorium			Gadolinium		
Bismuth			Europium		
Lead	0.04	22	Samarium		
Thallium			Neodymium		
Mercury			Praseodymium		
Gold			Cerium	0.03**	16
Platinum			Lanthanum	0.05**	27
Iridium			Barium	0.2	110
Osmium			Cesium	0.005	3
Rhenium			Iodine	0.02	11
Tungsten			Tellurium		
Tantalum			Antimony		
Hafnium			Tin	0.04	22
Lutetium			Indium	STD	
Ytterbium			Cadmium	0.008	4
Thulium			Silver	MC	
Erbium			Palladium		
Holmium			Rhodium		
Dysprosium					
Ruthenium			Vanadium	0.003	2
Molybdenum			Titanium	0.1	55
Niobium	≤0.005	≤3	Scandium	0.02	11
Zirconium	0.03	16	Calcium	MC	MC
Yttrium			Potassium	MC	MC

continued

STD - Internal Standard.
NR - Not Reported.
All elements not detected <0.04 µg/ml (<22 µg/m^3).
MC - Major Component.
INT - Interference.
*Flameless Atomic Absorption.
**Heterogeneous.

TABLE 20 (continued).

Element	Concentration in Sample μg/ml	Concentration in Gas μg/m^3	Element	Concentration in Sample μg/ml	Concentration in Gas μg/m^3
Strontium			Chlorine	5	2700
Rubidium	≤0.003	≤2	Sulfur	MC	MC
Bromine			Phosphorus		
Selenium	0.07	38	Silicon	2	1100
Arsenic	≤0.006	≤3	Aluminum		
Germanium	≥0.003	≥1	Magnesium	1	550
Gallium			Sodium	MC	MC
Zinc			Fluorine		
Copper			Oxygen	NR	
Nickel	0.5	275	Nitrogen	NR	
Cobalt	0.03	16	Carbon	NR	
Iron	5	2700	Boron		
Manganese	0.2	110	Beryllium		
Chromium	0.6	330	Lithium		
			Hydrogen	NR	

STD - Internal Standard.
NR - Not Reported.
All elements not detected <0.04 μg/ml (<22 μg/m^3).
MC - Major Component.
INT - Interference.
*Flameless Atomic Absorption.
**Heterogeneous.

TABLE 21. SUMMARY ELEMENTAL ANALYSIS, BOF HOT METAL CHARGING

Element	Concentration in Gas $\mu g/m^3$	Element	Concentration in Gas $\mu g/m^3$	Element	Concentration in Gas $\mu g/m^3$	Element	Concentration in Gas $\mu g/m^3$
Uranium	9	Terbium		Ruthenium		Vanadium	78
Thorium	<9	Gadolinium		Molybdenum	75	Titanium	55+
Bismuth	3	Europium		Niobium	≤13	Scandium	≤12
Lead	22+	Samarium		Zirconium	42	Calcium	MC
Thallium		Niodymium		Yttrium	≤2.4	Potassium	MC
Mercury	0.8	Praseodymium		Strontium	16	Chlorine	2700+
Gold		Cerium	40	Rubidium	≤11	Sulfur	62+
Platnium		Lanthanum	36	Bromine	346	Phosphorus	MC
Iridium		Barium	110+	Selenium	87	Silicon	1100+
Osmium		Cesium	3.6	Arsenic	≤49	Aluminum	MC
Rhenium		Iodine	11	Germanium	≥1.8	Magnesium	550+
Tungsten		Tellurium	15	Gallium	33	Sodium	MC
Tantalum		Antimony	6	Zinc	MC	Fluorine	MC
Hafnium		Tin	40	Copper	180	Oxygen	NR
Lutetium		Indium	STD	Nickel	310	Nitrogen	NR
Ytterbium		Cadmium	77	Cobalt	33	Carbon	NR
Thulium		Silver	17+	Iron	2700+	Boron	25
Erbium		Palladium		Manganese	110+	Beryllium	
Holmium		Rhodium		Chromium	842	Lithium	2
Dysprosium						Hydrogen	NR

+Also the major component of one sample.
MC - Major component of one or both samples.
NR - Not Reported.
All elements not reported <22 $\mu g/m^3$.

The elemental analysis indicates a wide variety of components in the fume generated during hot metal charging. Elements at concentrations that might have a negative environmental impact if the dust were landfilled include lead, barium, cadmium, selenium, arsenic, zinc, and chromium.

Level 1 Organic Categorization

The total organic found on the particulates captured by the SASS train was reported earlier in this section. The extract was not further analyzed (except for a LRMS on the unfractionated extract) since the amount of organic recovered was so low. The LRMS spectra indicated that there are no PNAs on the particulate.

The SASS organic module samples, including XAD-2 resin, module wash, and hose rinses, were combined and extracted. This extract was analyzed for TCO and GRAV organics and reported earlier in this section. The extract was then fractionated by LC and the fractions analyzed for TCO and GRAV organics. An IR was run on each fraction and a LRMS was run on fraction 3 to quantity the organic categories. The data (with XAD-2 blank subtracted) are summarized in Table 22. The LCs, IRs, and LRMS data are in the Appendices. Predominate categories found are esters, ketones, phosphates, and ethers. Concentrations found in none of the categories are high enough to be of concern. A small amount of aromatic hydrocarbons was detected, but no evidence for polynuclear aromatic hydrocarbons was found.

6.4 DUST CAPTURED BY BOF SECONDARY EMISSION CONTROL BAGHOUSE

The BOF secondary emission control baghouse captures fumes generated during hot metal transfer (pouring hot metal from the torpedo cars into ladles at the BOF shop), reladling (transferring the hot metal to a second ladle), scrap charge and hot metal charge to the vessel, tapping, and deslagging. All dust collected by the main baghouse is pneumatically transferred into a small bag filter above the dust hopper. Dust is collected in this small hopper and then drops (through a rotary value) into the main dust hopper. The dust is transferred, as needed, into a covered truck and removed from the site. The dust is pelletized and reused in the plant.

TABLE 22. ORGANIC EXTRACT SUMMARY TABLE, BOF HOT METAL CHARGE - SASS ORGANIC MODULE

	LC1	LC2	LC3	LC4	LC5	LC6	LC7	Σ
Total Organics, mg/m^3	0.3	0.1	0.2	0.4	0.4	2.4	0	3.8
TCO, mg/m^3	0	0.1	0.1	0	0	0.4	0	0.6
GRAV, mg/m^3	0.3	0	0.1	0.4	0.4	2.0	0	3.2
Category	Assigned Intensity - $mg/(m^3, \mathcal{L})$							
Aliphatic Hydrocarbons	100/0.3	QNS+					QNS+	0.3
Halogenated Aliphatics								
Aromatic Hydrocarbons			10/0.17					0.17
Halogenated Aromatics			1/0.02					0.02
Silicones								
Heterocyclic O Compounds			1/0.02					0.02
Nitroaromatics								
Ethers				100/0.4	100/0.13			0.53
Aldehydes								
Phosphates						100/0.8		0.8
Nitriles								
Heterocyclic N Compounds								
Heterocyclic S Compounds								
Alcohols								
Phenols								
Ketones					100/0.13	100/0.8		0.93

(Continued)

*Quantity Not Sufficient.

TABLE 22. ORGANIC EXTRACT SUMMARY TABLE, BOF HOT METAL CHARGE-SASS ORGANIC MODULE

Category	Assigned Intensity - mg/(m^3, $\mathcal{L}$)							
Amines								
Alkyl S Compounds								
Sulfuric Acids								
Sulfoxides								
Amides								
Carboxylic Acids								
Esters					100/0.13	100/0.8		0.93

*Quantity Not Sufficient.

In the same week that the BOF hot metal charging tests were being conducted, a sample of the dust was collected from the small hopper just below the small bag filter. Since many types of dust are collected by the system, these dust analyses cannot be meaningful compared to the particulate analyses from hot metal charging. The analysis does, however, provide an indication as to the types of materials in the dust and the approximate concentration of the various species in the dust. The information is useful in estimating possible emissions from the baghouse (either by determining particulate emission rates from the baghouse or estimating these emissions from other data) and in assessing the nature of these dusts which may be included with the solid wastes disposed of at some plants.

Inorganics

The baghouse dust sample was analyzed for inorganics by spark source mass spectrograph and also by atomic absorption spectroscopy. The results of these analyses are presented in Table 23. The concentrations of lead, mercury, barium, antimony, cadmium, strontium, selenium, arsenic, copper, manganese, and chromium are sufficiently high to be of concern for landfill application. The dust at Kaiser Steel is recycled, not landfilled.

Level 1 Organic Characterization

Methylene chloride was used to extract the organics from 430.12 grams of the baghouse dust. The total amount of organic extracted was 231.6 mg. Of this 6.6 mg was TCO (low boiling point material) and 225 mg was GRAV (high boiling point material). Therefore, the baghouse dust contained 538 mg of total organic per kg of dust. TCO material was 15 mg/kg and GRAV material was 523 mg/kg of the dust.

An aliquot of the total organic was fractionated into seven fractions by liquid chromatography (LC). Each fraction was analyzed for TCO and GRAV organics and examined for organic categories by infrared spectroscopy. A low resolution mass spectrographic (LRMS) analysis was performed on LC fractions 2 and 3. These data are summarized in Table 24.

Organics in the baghouse dust are primarily aliphatic and aromatic hydrocarbons and ketone. Other components are ethers, aldehydes, phosphates, alcohols, acids, and esters. The LRMS analysis indicates a significant

TABLE 23. ELEMENTAL ANALYSIS, BOF SECONDARY EMISSIONS CONTROL BAGHOUSE DUST

Concentration in mg/kg

Element	Concentration	Element	Concentration	Element	Concentration	Element	Concentration
Uranium	0.7	Terbium		Ruthenium		Vanadium	27
Thorium	0.8	Gadolinium		Molybdenum	5	Titanium	570
Bismuth	4	Europium		Niobium	6	Scandium	0.1
Lead	890	Samarium	0.3	Zirconium	11	Calcium	MC
Thallium	4	Neodymium	0.5	Yttrium	1	Potassium	MC
Mercury	2.58*	Praseodymium	0.6	Strontium	63	Chlorine	MC
Gold		Cerium	6	Rubidium	56	Sulfur	MC
Platinum		Lanthanum	4	Bromine	42	Phosphorus	MC
Iridium		Barium	100	Selenium	8	Silicon	MC
Osmium		Cesium	5	Arsenic	200	Aluminum	MC
Rhenium		Iodine	≤0.5	Germanium	4	Magnesium	MC
Tungsten	0.9	Tellurium		Gallium	65	Sodium	MC
Tantalum		Antimony	10	Zinc	MC	Fluorine	MC
Hafnium		Tin	18	Copper	MC	Oxygen	NR
Lutetium		Indium	STD	Nickel	40	Nitrogen	NR
Ytterbium		Cadmium	29**	Cobalt	15	Carbon	NR
Thulium		Silver	9	Iron	MC	Boron	2
Erbium		Palladium		Manganese	MC	Beryllium	
Holmium		Rhodium		Chromium	MC	Lithium	0.2
Dysprosium						Hyrogen	NR

STD - Internal Standard.
NR - Not Reported.
All elements not detected <0.1 Mg/kg.
MC - Major Component.

*By AAS.

TABLE 24. ORGANIC EXTRACT SUMMARY TABLE, BOF SECONDARY EMISSIONS BAGHOUSE DUST

	LC1	LC2	LC3	LC4	LC5	LC6	LC7	Σ
Total Organics, mg/kg	169.3	23.0	99.3	20.2	19.1	90.0	115.8	536.6
TCO, mg/kg	2.8	1.0	6.3	0.2	0	1.2	4.6	16.0
GRAV, mg/kg	166.5	22.0	93.0	20.0	19.1	88.8	111.2	520.6

Category	Assigned Intensity - mg/kg							
Aliphatic Hydrocarbons	100/169.3	100/11.4						180.7
Halogenated Aliphatics		1/0.1						0.1
Aromatic Hydrocarbons		100/11.4	100/98.3	10/10.1				119.8
Halogenated Aromatics		1/0.1	1/1					1.1
Silicones								
Heterocyclic O Compounds								
Nitroaromatics								
Ethers					100/6.4			6.4
Aldehydes				10/10.1				10.1
Phosphates						10/2.1	10/9.7	11.8
Nitriles							10/9.7	9.7
Heterocyclic N Compounds						10/2.1		2.1
Heterocyclic S Compounds								
Alcohols						100/21.4		21.4
Phenols								
Ketones					100/6.4	100/21.4	100/96.5	124.3

(Continued)

*Quantity Not Sufficient.

TABLE 24. ORGANIC EXTRACT SUMMARY TABLE, BOF SECONDARY EMISSIONS BAGHOUSE DUST

Category	Assigned Intensity - mg/kg							
Amines								
Alkyl S Compounds								
Sulfuric Acids								
Sulfoxides								
Amides								
Carboxylic Acids						100/21.4		21.4
Esters					100/6.4	100/21.4		27.8

*Quantity Not Sufficient.

concentration of polynuclear aromatic compounds. Several masses (m/es) identified (228, 252, 276, 278, and 302) could be the carcinogens chrysene, benzo(a)pyrene, indeno(1,2,3-cd) pyrene, benzanthracene, and dibenzopyrene, respectively.

6.5 BOF OXYGEN BLOW

6.5.1 Description

After hot metal charging is complete, the BOF vessel is returned to the upright position and an oxygen lance lowered to the metal surface. Oxygen is blown into the metal through the lance. Shortly after ignition is confirmed, fluxes (lime, dolomite, and fluorspar) are added. The oxygen blow period lasts about 15-20 minutes.

The gas formed by the oxygen-hot metal reactions contains a significant concentration of carbon monoxide (CO). This gas is drawn into the primary hood. The system is referred to as suppressed combustion because insufficient air is drawn into the hood to cause complete combustion of the gas.

Figure 4 is a schematic of the primary emission control system.

6.5.2 Test Description

Plant safety restrictions prevented direct sampling in the BOF primary ducts, either before or after the scrubber. Since it is likely that some or most organics and inorganics of concern that might be in the BOF gas would be captured by the scrubber, it was decided to sample around the scrubber and water treating system.

Samples were taken of the scrubber discharge water just as it entered the primary clarifier, solids removed from the primary clarifier, solids removed from the secondary clarifier vacuum filter, and of the clarified recycle water going to the scrubber. It should be noted that water was going to and coming from the scrubber on BOF vessel No.5 which was not operating at the time of the test. Process information collected during the test is shown in Table 25.

TABLE 25. PROCESS INFORMATION, BOF SCRUBBER WATER TESTS

BOF Vessel Operating - No.6		
Scrubber Water Flow Rate - (From vessels No.5* and No.6)	170.0 m^3/min	4500 gpm
Scrap Charged to Vessel	72.3 Megagrams	159,300 lb
Hot Metal Charged to Vessel	161.9 Megagrams	356,900 lb
Total:	234.2 Megagrams	516,200 lb
Approximate Blow Time	19 minutes	

*Water going to and from scrubber on vessel No.5 but steel was not being produced in that vessel.

6.5.3 Test Results

Suspended Solids

About 2 liters (0.5 gallons) of both the scrubber water and clarified recycle water was filtered for suspended solids determination. The results are in Table 26.

TABLE 26. BOF SCRUBBER SOLIDS CONCENTRATION

Sample	Suspended solids mg/l	Solids/min kg	Approximate kg Solids Captured per Mg Steel Produced
Discharge water	8090	137	11
Recycle water	90	1.5	

The data indicate that about 99 percent of the suspended solids are removed in the clarification process. About 135.5 kg (300 lb)/min of solids are removed from the water. Thus total solids (dry basis) produced per day (assuming 19 minutes oxygen blow period and 18 heats/24 hours) is about 46,340 kg (102,200 lb).

Organics

The scrubber discharge water, recycle water (both including suspended solids), solids from primary clarifier, and solids from secondary clarifier were extracted to determine organic content. The results are in Table 27.

TABLE 27. TOTAL ORGANICS IN BOF WATER TREATMENT SYSTEM SAMPLES

Sample	Concentration		
	TCO	GRAV	Total
Discharge water	2.2	19.2	21.4 mg/l
Recycle water	0.7	17.8	18.5 mg/l
Primary solids, dry weight basis	0.1	7.0	7.1 mg/kg
Secondary solids, dry weight basis	1.7	64.4	66.1 mg/kg

The data in Table 27 cannot be used for mass balancing purposes since the solids samples were taken several days before the water samples. Using the 2.9 mg/l difference found in the water samples, organic matter generated by the BOF would be about 0.94 kg (2.1 lb) per heat or 4×10^{-3} kg (8.8×10^{-3} lb) per Mg of steel processed.

The extracts from each of the four samples were fractionated by LC and TCO and GRAV organics determined. Most fractions were examined by IR and fractions 2 and 3 examined by LRMS. The results are summarized in Tables 28 through 31. The scrubber discharge water contains about equal amounts of silicones, ethers, phosphates, alcohols, ketones, amines, carboxylic acids and esters. None of the category concentrations are high enough for any concern. There was no evidence of polynuclear aromatic hydrocarbons.

The clarified recycle water organics (Table 29) were predominately aliphatic hydrocarbons, silicones, ethers, phosphates, ketones, amines, and amides. There was no evidence of polynuclear aromatic hydrocarbons. Basically the scrubber feed and discharge waters are very similar in organic type and concentration. The LRMS spectra obtained for both samples are virtually identical and are characterized by two clusters 14 mass

TABLE 28. ORGANIC EXTRACT SUMMARY TABLE, BOF SCRUBBER DISCHARGE WATER

	LC1	LC2	LC3	LC4	LC5	LC6	LC7	Σ
Total Organics, mg/L	0.7	1.6	3.8	0.9	0.5	4.0	4.4	15.9
TCO, mg/L	0	0.6	0.3	0.3	0.2	1.0	0	2.2
GRAV, mg/L	0.7	1.0	3.5	0.6	0.3	3.0	4.4	13.7
Category	Assigned Intensity - mg/L							
Aliphatic Hydrocarbons	QNS*	100/0.8						0.8
Halogenated Aliphatics								
Aromatic Hydrocarbons		1/0.008	1/0.01					0.018
Halogenated Aromatics								
Silicones		100/0.8	100/0.95	100/0.3				2.05
Heterocyclic O Compounds								
Nitroaromatics								
Ethers			100/0.95	100/0.3				1.25
Aldehydes								
Phosphates			100/0.95	100/0.3	100/0.13	100/0.08	100/0.71	2.17
Nitriles								
Heterocyclic N Compounds								
Heterocyclic S Compounds								
Alcohols						100/0.77	100/0.71	1.48
Phenols								
Ketones					100/0.13	100/0.77	100/0.71	1.61

(Continued)

*Quantity Not Sufficient.

TABLE 28. ORGANIC EXTRACT SUMMARY TABLE, BOF SCRUBBER DISCHARGE WATER

Category	Assigned Intensity - mg/L							
Amines						100/0.77	100/0.71	1.48
Alkyl S Compounds			100/0.95					0.95
Sulfuric Acids								
Sulfoxides								
Amides					100/0.13	10/0.08	10/0.07	0.28
Carboxylic Acids						100/0.77	100/0.71	1.48
Esters					100/0.13	100/0.77	100/0.71	1.61

*Quantity Not Sufficient.

TABLE 29. ORGANIC EXTRACT SUMMARY TABLE, BOF SCRUBBER CLARIFIED RECYCLE WATER

	LC1	LC2	LC3	LC4	LC5	LC6	LC7	Σ
Total Organics, mg/L	0.5	2.8	4.5	0.1	0.8	2.9	2.8	14.3
TCO, mg/L	0	0.1	0.1	0.1	0.1	0.1	0	0.5
GRAV, mg/L	0.5	2.7	4.4	0	0.7	2.8	2.8	13.8
Category	Assigned Intensity - mg/L							
Aliphatic Hydrocarbons	100/0.5	100/1.4		QNS*	QNS*			1.9
Halogenated Aliphatics								
Aromatic Hydrocarbons		1/0.01	1/0.01					0.02
Halogenated Aromatics								
Silicones		100/1.4	100/1.5					2.9
Heterocyclic O Compounds								
Nitroaromatics								
Ethers			100/1.5					1.5
Aldehydes								
Phosphates			100/1.5			100/1.5		3.0
Nitriles								
Heterocyclic N Compounds								
Heterocyclic S Compounds								
Alcohols								
Phenols								
Ketones						100/1.5		1.5

(Continued)

*Quantity Not Sufficient.

TABLE 29. ORGANIC EXTRACT SUMMARY TABLE , BOF SCRUBBER CLARIFIED RECYCLE WATER

Category	Assigned Intensity - mg/L							
Amines							100/1.4	1.4
Alkyl S Compounds								
Sulfuric Acids								
Sulfoxides								
Amides							100/1.4	1.4
Carboxylic Acids								
Esters								

*Quantity Not Sufficient.

TABLE 30. ORGANIC EXTRACT SUMMARY TABLE, SOLIDS FROM BOF SCRUBBER PRIMARY CLARIFIER

	LC1	LC2	LC3	LC4	LC5	LC6	LC7	Σ
Total Organics, mg/kg	1.8	0	0.7	0.9	0.6	0.6	2.0	6.5
TCO, mg/kg	0	0	0	0	0	0	0	0
GRAV, mg/kg	1.8	0	0.7	0.9	0.6	0.6	2.0	6.5

Category	Assigned Intensity - mg/kg							
Aliphatic Hydrocarbons	100/1.8	QNS*			QNS*	QNS*	QNS*	1.8
Halogenated Aliphatics								
Aromatic Hydrocarbons			100/0.7	100/0.9				1.6
Halogenated Aromatics								
Silicones								
Heterocyclic O Compounds								
Nitroaromatics								
Ethers								
Aldehydes								
Phosphates								
Nitriles								
Heterocyclic N Compounds								
Heterocyclic S Compounds								
Alcohols								
Phenols								
Ketones								

(Continued)

*Quantity Not Sufficient.

TABLE 31. ORGANIC EXTRACT SUMMARY TABLE , SOLIDS FROM BOF SCRUBBER SECONDARY CLARIFIER

	LC1	LC2	LC3	LC4	LC5	LC6	LC7	Σ
Total Organics, mg/kg	46.4	3.4	1.7	0.9	2.6	5.7	9.4	70.1
TCO, mg/kg	0	0	0	0	0	1.4	0	1.4
GRAV, mg/kg	46.4	3.4	1.7	0.9	2.6	4.3	9.4	68.7
Category	Assigned Intensity - mg/kg							
Aliphatic Hydrocarbons	100/46.4	100/1.7						48.1
Halogenated Aliphatics								
Aromatic Hydrocarbons		100/1.7	100/1.7					3.4
Halogenated Aromatics								
Silicones								
Heterocyclic O Compounds								
Nitroaromatics								
Ethers				100/0.3				0.3
Aldehydes								
Phosphates								
Nitriles								
Heterocyclic N Compounds								
Heterocyclic S Compounds								
Alcohols						100/1.1	100/1.9	3.0
Phenols								
Ketones				100/0.3	100/1.3	100/1.1	100/1.9	4.6

(Continued)

*Quantity Not Sufficient.

TABLE 31. ORGANIC EXTRACT SUMMARY TABLE, SOLIDS FROM BOF SCRUBBER SECONDARY CLARIFIER

Category	Assigned Intensity - mg/kg							
Amines						100/1.1	100/1.9	3.0
Alkyl S Compounds								
Sulfuric Acids								
Sulfoxides								
Amides								
Carboxylic Acids						100/1.1	100/1.9	3.0
Esters				100/0.3	100/1.3	100/1.1	100/1.9	4.6

*Quantity Not Sufficient.

units apart appearing periodically every 74 mass units. This indicates a long chain polymer which may be the coagulant added in water treatment to assist in suspended solids removal.

The organics contained on the solids removed from the primary clarifier were predominately aliphatic and aromatic hydrocarbons. There is evidence (LRMS) of polynuclear aromatic hydrocarbons in the sample. The masses found at m/es of 252 and 278 could be the carcinogens benzo(a)pyrene and dibenzanthracene, respectively. Maximum estimated concentration of these materials is less than 1 mg/kg.

The clarifier solids were composited for a three-day period before the water samples were taken. This may explain why PNAs were not found in the clarifier influent water but were found in the primary solids. It appears PNA production during oxygen blowing may not occur during every heat.

The organic category summary for the secondary clarifier solids is given in Table 31. The sample is predominately aliphatic hydrocarbons with lesser amounts of aromatic hydrocarbons, alcohols, ketones, amines, carboxylic acids, and esters. No evidence of PNAs was found in the sample. The concentrations of the organic categories is not high enough for concern.

Inorganics

Both the scrubber discharge water and the clarified recycle water were analyzed for elemental content by spark source mass spectroscopy. The results, given as actual concentration in the water, are presented in Tables 32 and 33.

The elemental composition of the both samples is quite similar. Although removing the suspended solids does result in a substantial reduction in the concentration of most elements, the concentrations of some elements, i.e., lead, selenium, manganese, copper, and zinc, in the clarified water would be of concern if discharged to surface waters. No discharge of this water occurs at the Kaiser plant, which operates at 100 percent recycle.

TABLE 32. ELEMENTAL ANALYSIS, DISCHARGE WATER FROM BOF SCRUBBER

Concentration in μg/ml

Element	Concentration	Element	Concentration	Element	Concentration	Element	Concentration
Uranium	<0.01	Terbium		Ruthenium		Vanadium	0.1
Thorium	<0.01	Gadolinium		Molybdenum	0.06	Titanium	0.3
Bismuth	0.005	Europium		Niobium	0.02	Scandium	≤0.002
Lead	3	Samarium		Zirconium	0.009	Calcium	MC
Thallium		Neodymium		Yttrium	0.002	Potassium	MC
Mercury	NR	Praseodymium		Strontium	0.06	Chlorine	MC
Gold		Cerium	0.007	Rubidium	0.5	Sulfur	>9
Platinum		Lanthanum		Bromine	0.3	Phosphorus	MC
Iridium		Barium	0.2	Selenium	≤0.03	Silicon	MC
Osmium		Cesium	0.02	Arsenic	0.2	Aluminum	1
Rhenium		Iodine	0.02	Germanium	0.03	Magnesium	MC
Tungsten	≤0.008	Tellurium		Gallium	0.5	Sodium	MC
Tantalum		Antimony	0.02	Zinc	7	Fluorine	MC
Hafnium		Tin	0.1	Copper	0.8	Oxygen	NR
Lutetium		Indium	STD	Nickel	0.1	Nitrogen	NR
Ytterbium		Cadmium	0.005	Cobalt	0.04	Carbon	NR
Thulium		Silver	0.1	Iron	MC	Boron	0.009
Erbium		Palladium		Manganese	MC	Beryllium	
Holmium		Rhodium		Chromium	0.8	Lithium	0.02
Dysprosium						Hydrogen	NR

STD - Internal Standard.
NR - Not Reported.
All elements not detected <0.001 μg/ml.
MC - Major Component >10 μg/ml.
INT - Interference.

TABLE 33. ELEMENTAL ANALYSIS, CLARIFIED RECYCLE WATER TO BOF SCRUBBER

Concentration in μg/ml

Element	Concentration	Element	Concentration	Element	Concentration	Element	Concentration
Uranium	<0.006	Terbium		Ruthenium		Vanadium	0.02
Thorium	<0.008	Gadolinium		Molybdenum	≤0.02	Titanium	0.1
Bismuth		Europium		Niobium	0.004	Scandium	<0.001
Lead	0.2	Samarium		Zirconium	≤0.006	Calcium	MC
Thallium		Neodymium		Yttrium	0.001	Potassium	MC
Mercury	NR	Praseodymium		Strontium	0.06	Chlorine	MC
Gold		Cerium	0.002	Rubidium	0.8	Sulfur	MC
Platinum		Lanthanum		Bromine	0.08	Phosphorus	MC
Iridium		Barium	0.04	Selenium	≤0.02	Silicon	6
Osmium		Cesium	0.03	Arsenic	0.04	Aluminum	0.3
Rhenium		Iodine	0.02	Germanium	0.02	Magnesium	10
Tungsten		Tellurium		Gallium	0.02	Sodium	MC
Tantalum		Antimony	0.007	Zinc	0.6	Fluorine	≈8
Hafnium		Tin	0.07	Copper	0.3	Oxygen	NR
Lutetium		Indium	STD	Nickel	0.004	Nitrogen	NR
Ytterbium		Cadmium	≤0.002	Cobalt	0.002	Carbon	NR
Thulium		Silver	≤0.002	Iron	MC	Boron	0.004
Erbium		Palladium		Manganese	3	Beryllium	
Holmium		Rhodium		Chromium	0.05	Lithium	0.001
Dysprosium						Hydrogen	NR

STD - Internal Standard.
NR - Not Reported.
All elements not detected <0.001 μg/ml.
MC - Major Component >10 μg/ml.
INT - Interference.

TABLE 34. NOTATION AND CONVERSION FACTORS

Notation

gms	-	grams
mg	-	milligram, 10^{-3} grams
μg	-	microgram, 10^{-6} grams
kg	-	kilogram, 10^{3} grams
Mg	-	Megagram, 10^{6} grams
L	-	Liter
mL	-	milliliter, 10^{-3} liters
Nm^3	-	Normal cubic meter [at 20°C (68°F) and 76.0 cm Hg (29.92 in. Hg)]
dscf (m)	-	dry standard cubic feet (per minute)(at 20°C and 76.0 cm Hg)

Conversion Factors

Metric Unit	Multiply by	To Obtain English Unit
gms	0.0022046	pounds (lb)
Mg	1.1023	tons
kg/Mg	2	lb/ton
Nm^3	35.315	dscf
mg/Nm^3	0.000437	grains/dscf
L	0.26417	gallons
m^3	264.172	gallons
°C	(°C x 1.8) + 32	°F
cm Hg	5.3577	inches H_2O

REFERENCES

1. Lentzen, D. E., D. E. Wagoner, E. D. Estes, and W. F. Gutknecht. IERL-RTP Procedures Manual: Level 1 Environmental Assessment-Second Edition. EPA-600/7-78-201.

2. Kingsbury, G. L., R. C. Sims, and J. B. White. Multimedia Environmental Goals for Environmental Assessment-MEG Charts and Background Information Summaries-Volume III-Categories 1-12, EPA-600/7-79-176a, August 1979 and Volume IV-Categories 13-26, EPA-600/7-79-176b, August 1979.

APPENDICES

APPENDIX A:

IR ANALYSIS REPORTS

TABLE A-1. IR REPORT, DESULFURIZATION-SASS CYCLONE DUST EXTRACT

A. Concentrate, Before LC

ν, cm^{-1}	Intensity	Assignment	Comment
2851-2957	S	CH, aliphatic	
1738	W	C=O, ketone/ester	Contaminant
1456	W	CH, aliphatic	
1259	M	COC, ketone; phosphate; silicone	
1019, 1097	M	COC, ether; phosphate; silicone	Doublet
702	M	CH, substituted aliphatic	

B. LC-1

ν, cm^{-1}	Intensity	Assignment	Comment
2855-2955	S	CH, aliphatic	
1731	M	C=O, ketone/ester	
1458	M	CH, aliphatic	
1378	W	CH, aliphatic	
1272	M	COC, ketone; silicone	
1072, 1119	M	COC, ether; silicone	
739	W	CH, substituted aliphatic	

C. LC-2

Quantity not sufficient for test.

D. LC-3

ν, cm^{-1}	Intensity	Assignment	Comment
2851-2964	W	CH, aliphatic	
1731	W	C=O, ketone/ester	
1259	W	COC, ketone; phosphate; silicone	
1019, 1090	W	COC, ether; phosphate; silicone	
800	W	CH, substituted aliphatic	

E. LC-4

Quantity not sufficient for test.

F. LC-5

Quantity not sufficient for test.

continued

Table A-1 (continued).

G. LC-6

ν, cm^{-1}	Intensity	Assignment	Comment
2853-2960	S	CH, aliphatic	
1733	S	C=O, ketone/ester	
1373, 1466	W	CH, aliphatic	
1259	W	COC, ketone; phosphate	
1159	W	COC, ester/ether; phosphate	
1025	M	COC, ether; phosphate;	
719	W	CH, substituted aliphatic	

H. LC-7

Quantity not sufficient for test.

TABLE A-2. IR REPORT, DESULFURIZATION-SASS ORGANIC MODULE EXTRACT

A. Concentrate, Before LC

ν, cm^{-1}	Intensity	Assignment	Comment
2858-2957	S	CH, aliphatic	
1731	S	C=O, ketone/ester	
1456, 1463	M	CH, aliphatic	
1379	W	CH, aliphatic	
1265-1287	M	COC, ester/ether	Broad
1026-1124	M	COC, ester/ether/ketone	Broad
801	M	CH, substituted aliphatic	
702-744	W	CH, substituted aliphatic	Doublet

B. LC-1

ν, cm^{-1}	Intensity	Assignment	Comment
2855, 2921	S	CH, aliphatic	
1378, 1458	M	CH, aliphatic	

C. LC-2

ν, cm^{-1}	Intensity	Assignment	Comment
2855-2962	S	CH, aliphatic	
1731	S	C=O, ketone/ester	
1458	M	CH, aliphatic	
1278	S	COC, ester/ether	
1072, 1125	M	COC, ester/ether/ketone	
746	W	CH, substituted aliphatic	

D. LC-3

ν, cm^{-1}	Intensity	Assignment	Comment
2851-2957	M	CH, aliphatic	
1738	W	C=O, ketone/ester	Contaminant
1259	M	COC, ester/ether	
1019-1090	M	COC, ester/ether/ketone	Broad
801	M	CH, substituted aliphatic	

E. LC-4

ν, cm^{-1}	Intensity	Assignment	Comment
2851-2950	M	CH, aliphatic	
1731	W	C=O, ketone/ester	Contaminant
1266	W	COC, ester/ether	
801	W	CH, substituted aliphatic	

continued

TABLE A-2 (continued).

F. LC-5

ν, cm^{-1}	Intensity	Assignment	Comment
2862-2962	S	CH, aliphatic	
1731	M	C=O, ketone/ester	
1458	W	CH, aliphatic	
1272	M	COC, ester/ether	
1072, 119	W	COC, ester/ether/ketone	
746	W	CH, substituted aliphatic	

G. LC-6

ν, cm^{-1}	Intensity	Assignment	Comment
2849-2949	M	CH, aliphatic	
1557	M	CH, aliphatic	
1458	M	CH, aliphatic	
1012	M	CH, aliphatic	

H. LC-7

Quantity not sufficient for test.

TABLE A-3. IR REPORT, DESULFURIZATION-EXTRACT OF DUST COLLECTED BY BAGHOUSE

A. Concentrate, Before LC

ν, cm^{-1}	Intensity	Assignment	Comment
2858, 2929	S	CH, aliphatic	
1723	M	C=O, ketone/ester	
1456	M	CH, aliphatic	
1378	W	CH, aliphatic	
1260	W	COC, ketone	
1034, 1190	W	COC, ester/ether	
735, 814	W	CH, substituted aliphatic	

B. LC-1

ν, cm^{-1}	Intensity	Assignment	Comment
2855-2955	S	CH, aliphatic	
1458	M	CH, aliphatic	
1378	W	CH, aliphatic	
720	W	CH, substituted aliphatic	

C. LC-3

Quantity not sufficient for test

D. LC-3

ν, cm^{-1}	Intensity	Assignment	Comment
3077	S	CH, aromatic/olefin	
2851-2957	S	CH, aliphatic	
1738	S	C=O, ketone/ester	
1372, 1456	W	CH, aliphatic	
1083, 1125, 1202, 1287	M	COC, ether/ketone/ester; silicone	
744, 963	W	CH substituted aromatic/aliphatic	

E. LC-4

ν, cm^{-1}	Intensity	Assignment	Comment
2855, 2929	S	CH, aliphatic	
1731	S	C=O, ketone/ester	
1458	M	CH, aliphatic	
1365	W	CH, aliphatic	
1278	M	COC, ketone; phosphate	
1199	W	COC, ester	
1119	S	COC, ether	
1025	W	COC, ether; silicone	
746, 853	W	CH, substituted aliphatic	

continued

TABLE A-3 (continued).

F. LC-5

ν, cm^{-1}	Intensity	Assignment	Comment
2853-2940	M	CH, aliphatic	
1713	W	C=O, ketone	
1393, 1453	W	CH, aliphatic	
1033	W	COC, ketone/ether	Broad
732	W	CH, substituted aliphatic	

G. LC-6

ν, cm^{-1}	Intensity	Assignment	Comment
2853-2953	S	CH, aliphatic	
1713	M	C=O, ketone	
1373, 1453	W	CH, aliphatic	
1039	M	COC, ketone	
706, 739	W	CH, substituted aliphatic	

H. LC-7

ν, cm^{-1}	Intensity	Assignment	Comment
2853-2953	S	CH, aliphatic	
1733, 1713	M	C=O, ketone/ester	
1379, 1466	W	CH, aliphatic	
1000-1200	M	COC, ketone/ester; sulfoxide	Broad

TABLE A-4. IR REPORT, BOF HOT METAL CHARGING-SASS CYCLONE DUST EXTRACT

A. Concentration, No LC Performed

ν, cm^{-1}	Intensity	Assignment	Comment
2851, 2929	M	CH, aliphatic	
1738	W	C=O, ketone/ester	
1280	W	COC, ketone/ester; silicone; phosphate	
1019, 1076, 1118	W	COC, ether; silicone; phosphate	
801	W	CH, substituted aliphatic	

TABLE A-5. IR REPORT, BOF HOT METAL CHARGING-SASS ORGANIC MODULE EXTRACT

A. Concentrate, Before LC

ν, cm^{-1}	Intensity	Assignment	Comment
3062	W	CH, aromatic/olefin	
2858-2957	S	CH, aliphatic	
1731	S	C=O, ketone/ester	
1372, 1456	W	CH, aliphatic	
1287	M	COC, ester/ketone/ether	
1076, 1125	W	COC, ester/ketone/ether	
716, 744	W	CH, substituted aliphatic/ aromatic	

B. LC-1

ν, cm^{-1}	Intensity	Assignment	Comment
2855-2955	S	CH, aliphatic	
1730	W	C=O, ketone/ester	Contaminant
1378, 1458	W	CH, aliphatic	
1265	W	COC, ketone	Contaminant

C. LC-2

Quantity not sufficient for test.

D. LC-3

ν, cm^{-1}	Intensity	Assignment	Comment
2915	M	CH, aliphatic	
1458	W	CH, aliphatic	
1092	M	COC, ether	Broad
806	W	CH, substituted aliphatic	

E. LC-4

ν, cm^{-1}	Intensity	Assignment	Comment
2853-2960	S	CH_2, aliphatic	
1739	M	C=O, ketone/ester	
1459	M	CH, aliphatic	
1386	S	CH, aliphatic	
1173	M	COC, ester/ether/ketone	Broad

continued

TABLE A-5 (continued).

F. LC-5

ν, cm^{-1}	Intensity	Assignment	Comment
2855-2962	S	CH, aliphatic	
1731	S	C=O, ketone/ester	
1458	M	CH, aliphatic	
1378	W	CH, aliphatic	
1272	M	COC, ketone	
1072, 1125	M	COC, ester/ether	
706-779	W	CH, substituted aliphatic	

G. LC-6

ν, cm^{-1}	Intensity	Assignment	Comment
2853, 2926	S	CH_2, aliphatic	
1726	S	C=O, ketone/ester	
1453	M	CH_2, aliphatic	
1373	W	CH_2, aliphatic	
1286	S	P=O, phosphate; COC, ketone	
1119	M	POC, phosphate; COC, ether	
712	M	CH_2, substituted aliphatic	

H. LC-7

ν, cm^{-1}	Intensity	Assignment	Comment
2855-2942	M	CH, aliphatic	
1730	W	C=O, ester/ketone	
1458	W	CH, aliphatic	
1272	W	COC, ketone	

TABLE A-6. IR REPORT, BOF TEST-SASS XAD-2 BLANK

A. Concentrate, Before LC

Not Run

B. LC-1, LC-2

Quantity not sufficient for test.

C. LC-3

ν, cm^{-1}	Intensity	Assignment	Comment
2851, 2922	W	CH, aliphatic	

D. LC-4

Quantity not sufficient for test.

E. LC-5

ν, cm^{-1}	Intensity	Assignment	Comment
2855-2942	S	CH, aliphatic	
1744	M	C=O, ketone/ester	
1378, 1458	W	CH, aliphatic	
1272	W	COC, ketone; phosphate	
1072, 1145	W	COC, ester; phosphate	

F. LC-6

Quantity not sufficient for test.

G. LC-7

ν, cm^{-1}	Intensity	Assignment	Comment
3361	M	NH/OH	
2849-2962	W	CH, aliphatic	
1644	M	C=O, amide	
1558	W	NH, amide/amine; OH, alcohol	
1351, 1458	W	CH, aliphatic	
1052	W	OH, alcohol; CN, amine	Broad

TABLE A-7. IR REPORT, BOF OXYGEN BLOW-EXTRACT OF CLARIFIED RECYCLE WATER TO SCRUBBER

A. Concentrate, Before LC

ν, cm^{-1}	Intensity	Assignment	Comment
2858-2964	M	CH, aliphatic	
1724	M	C=O, ketone/ester	
1456	W	CH, aliphatic	
1259	W	COC, ketone; silicone; phosphate	
1026, 1096	W	COC, ester/ether; silicone; phosphate	
800	W	CH, substituted aliphatic	

B. LC-1

ν, cm^{-1}	Intensity	Assignment	Comment
2855-2955	S	CH, aliphatic	
1731	S	C=O, ketone/ester	Contaminant
1458	M	CH, aliphatic	
1378	W	CH, aliphatic	
1272	S	COC, ketone; silicone	
1072, 1125	M	COC, ester/ether; silicone	
746, 966	W	CH, substituted aliphatic	

C. LC-2

ν, cm^{-1}	Intensity	Assignment	Comment
2966	M	CH, aliphatic	
1259	S	Silicone	
1026, 1093	S	COC, ether; silicone	Doublet
799	S	CH, substituted aliphatic	
692	W	CH, substituted aliphatic	

D. LC-3

ν, cm^{-1}	Intensity	Assignment	Comment
2908, 2964	S	CH, aliphatic	
1413	W	CH, aliphatic	
1259	S	Silicone, phosphate	
1019, 1090	S	COC, ether; phosphate; silicone	Doublet
864	W	CH, substituted aliphatic	
801	S	CH, substituted aliphatic	
695	W	CH, substituted aliphatic	

continued

TABLE A-7 (continued).

E. LC-4, LC-5

Quantity not sufficient for test.

F. LC-6

ν, cm^{-1}	Intensity	Assignment	Comment
2853-2960	S	CH, aliphatic	
1713	S	C=O, ketone	
1379, 1453	M	CH, aliphatic	
1259	M	COC, ketone; phosphate	
1033, 1099	S	POC, phosphate	
799	M	CH, substituted aliphatic	

G. LC-7

ν, cm^{-1}	Intensity	Assignment	Comment
3387	S	NH/OH	
2866, 2926	W	CH, aliphatic	
1653	M	C=O, amide	
1346	M	OH, alcohol	Broad
1072	M	OH, alcohol; CN, amine	

TABLE A-8. IR REPORT, BOF OXYGEN BLOW-EXTRACT OF SCRUBBER DISCHARGE WATER BEFORE CLARIFICATION

A. Concentrate, Before LC

ν, cm^{-1}	Intensity	Assignment	Comment
3300-3500	W	OH or NH	Broad
2964	S	CH, aliphatic	
2492, 2668	W	SH/SC, alkyl S compounds OH, alcohol/phenol/acid	
1731	S	C=O, ketone/ester/acid	
1639	W	C=O, amide	
1555	M	NH, amide/amine	
1456	M	CH, aliphatic	
1414	W	CN, amide; CO/OH, acid; SCH, alkyl S compounds Si, silicone	
1259	W	CN, amide; CO/OH, acid; P=O, phosphate	
1040-1090	M	COH, alcohol/phenol CN, amine; POC, phosphate; SiOC, silicone	Broad
794-871	M	NH, amine; SH, alkyl S compounds CH, substituted aliphatic; phosphate, silicone	

B. LC-1

Quantity not sufficient for test.

C. LC-2

ν, cm^{-1}	Intensity	Assignment	Comment
2968	M	CH, aliphatic	
1265	M	SiC, silicone	
1066	M	COC, ether; SiOC, silicone	Broad
679, 806	M	CH, aliphatic	

D. LC-3

ν, cm^{-1}	Intensity	Assignment	Comment
2908, 2964	S	CH, aliphatic	
1414	W	SCH, alkyl S compounds	
1259	S	P=O, phosphate; SiC, silicone	
1019-1097	S	COC, ether	Doublet
864	M	SH, alkyl S compounds	
800	S	PO, phosphate; SiC, silicone	
702	W	CH, substituted aliphatic	

continued

TABLE A-8 (continued).

E. LC-4

ν, cm^{-1}	Intensity	Assignment	Comment
2971	W	CH, aliphatic	
1259	W	P=O, phosphate; SiC, silicone	
1019-1083	W	COC, ether; POC, phosphate	Broad
801	W	PO, phosphate; SiC, silicone	

F. LC-5

ν, cm^{-1}	Intensity	Assignment	Comment
2855-2962	S	CH, aliphatic	
1731	M	C=O, ketone/ester	
1644	M	C=O, amide	
1558	M	NO_2, nitrogen compounds	
1378, 1458	W	CH, aliphatic	
1258	S	COC, ester/ketone; amide; phosphate	
1026, 1085	M	Phosphates	Doublet
799	M	CH, substituted aliphatic	

G. LC-6

ν, cm^{-1}	Intensity	Assignment	Comment
3341	M	NH or OH	Broad
2869, 2935	S	CH, aliphatic	
1731	S	C=O, ketone/ester/acid	
1631	W	C=O, amide	
1558	M	NH, amide/amine	
1458	M	CH, aliphatic	
1278	W	P=O, phosphate	Doublet
1085	M	POC, phosphate; OH, alcohol; CN, amine	
750-850	W	CH, substituted aliphatic	Multiplet

H. LC-7

ν, cm^{-1}	Intensity	Assignment	Comment
3288	S	NH or OH	Broad
2862-2962	S	CH, aliphatic	
1731	S	C=O, ketone/ester/acid	
1651	W	C=O, amide	
1458	M	CH, aliphatic	
1385	W	CH, aliphatic	
1278	S	P=O, phosphate	
1072, 1119	M	OH, alcohol; CN, amine	

TABLE A-9. IR REPORT, EXTRACT OF SOLIDS FROM BOF SCRUBBER PRIMARY CLARIFIER

A. Concentrate, Before LC

ν, cm^{-1}	Intensity	Assignment	Comment
3027, 3063	W	CH, aromatic/olefin	
2851, 2922	S	CH, aliphatic	
1738	W	C=O, ketone/ester	
1604	W	CH, aromatic	
1491	M	CH, aromatic	
1449	M	CH, aliphatic	
1372	W	CH, aliphatic	
759	M	CH, substituted aromatic/ aliphatic	
702	S	CH, substituted aromatic/ aliphatic	

B. LC-1

ν, cm^{-1}	Intensity	Assignment	Comment
2855-2955	S	CH, aliphatic	
1378, 1458	W	CH, aliphatic	

C. LC-2

Quantity not sufficient for test.

D. LC-3

ν, cm^{-1}	Intensity	Assignment	Comment
3022, 3055	M	CH, aromatic/olefin	
2849-2955	S	CH, aliphatic	
1718	W	C=O, ketone/ester	Contaminant
1491	M	CH, aromatic	
1451	M	CH, aliphatic	
1026, 1066, 1272	W	COC, ketone/ester/ether	
753	M	CH, substituted aromatic/ aliphatic	
693	S	CH, substituted aromatic	

continued

TABLE A-9 (continued).

E. LC-4

ν, cm^{-1}	Intensity	Assignment	Comment
3026, 3060	M	CH, aromatic/olefin	
2853, 2926	S	CH, aliphatic	
1733	W	C=O, ketone/ester	Contaminant
1599	W	CH, aromatic	
1493	M	CH, aromatic	
1453	M	CH, aliphatic	
1366	W	CH, aliphatic	
759	M	CH, substituted aromatic/ aliphatic	
692	S	CH, substituted aromatic	

F. LC-5, LC-6, LC-7

Quantity not sufficient for test.

TABLE A-10. IR REPORT, EXTRACT OF SOLIDS FROM BOF SCRUBBER SECONDARY CLARIFIER

A. Concentrate, Before LC

ν, cm^{-1}	Intensity	Assignment	Comment
2853, 2926	S	CH_2, aliphatic	
1739	W	C=O, ester/ketone	
1465	M	CH_2, aliphatic	
1379	W	CH_2, aliphatic	
1265	W	COC, ester	
		P=O, phosphate; SiC, silicone	Broad
		POC, phosphates	
1099	W	SiOC, silicone; COC, ether	Broad
726, 812	W	CH, substituted aliphatic	Broad
		SiC, silicone; phosphate	

B. LC-1

Quantity not sufficient for test.

C. LC-2

ν, cm^{-1}	Intensity	Assignment	Comment
2855-2955	S	CH, aliphatic	
1458	M	CH, aliphatic	
1378	W	CH, aliphatic	
1019	W	COC, ether	
806	W	CH, substituted aliphatic	

D. LC-3

ν, cm^{-1}	Intensity	Assignment	Comment
2855-2955	M	CH, aliphatic	
1738	W	C=O, ketone/ester	Contaminant
1458	W	CH, aliphatic	
1265	W	COC, ketone	

E. LC-4

ν, cm^{-1}	Intensity	Assignment	Comment
2855-2955	S	CH, aliphatic	
1744	M	C=O, ketone/ester	
1458	M	CH, aliphatic	
1152	W	COC, ester/ether	
746	M	CH, aliphatic	

continued

TABLE A-10 (continued).

F. LC-5

ν, cm^{-1}	Intensity	Assignment	Comment
2855-2955	M	CH, aliphatic	
1738	W	C=O, ketone/ester	
1458	W	CH, aliphatic	

G. LC-6

ν, cm^{-1}	Intensity	Assignment	Comment
3361	M	NH/OH	Broad
2855, 2929	S	CH_2, aliphatic	
1730	M	C=O, ketone/ester/acid	
1458	M	CH, aliphatic	
1378	W	CH, aliphatic	
1245	W	COC, ketone/ester	
1105	S	OH, alcohol; CN, amine	
952	W	OH, acid; NH, amine	

H. LC-7

ν, cm^{-1}	Intensity	Assignment	Comment
3374	S	OH/NH	Very broad
2855-2962	M	CH, aliphatic	
1730	M	C=O, ester	
1638	M	NH, amine	Broad
1372, 1458	W	CH, aliphatic COC, ester	
1272	M	P=O, phosphate OH, alcohol	
1072, 1119	M	PO, phosphate	
952	W	NH, amine	

TABLE A-11. IR REPORT, EXTRACT OF SOLIDS COLLECTED BY BOF SECONDARY EMISSIONS CONTROL BAGHOUSE

A. Concentrate, Before LC

ν, cm^{-1}	Intensity	Assignment	Comment
3034	W	CH, aromatic, olefin	
2858, 2929	S	CH, aliphatic	
1717	M	C=O, ketone/unsaturated ester	Broad
1456	M	CH, aliphatic	
1379	W	CH, aliphatic	
1118	W	COC, ester, ketone	
752	W	CH, substituted aliphatic CH, substituted aromatic	

B. LC-1

ν, cm^{-1}	Intensity	Assignment	Comment
2855, 2929	S	CH, aliphatic	
1378, 1458	M	CH, aliphatic	
1265	M	CH, aliphatic	
746	M	CH, substituted aliphatic	

C. LC-2

ν, cm^{-1}	Intensity	Assignment	Comment
2855-2955	S	CH, aliphatic	
1458	M	CH, aliphatic	
746	W	CH, substituted aliphatic	

D. LC-3

ν, cm^{-1}	Intensity	Assignment	Comment
3046	M	CH, aromatic/olefin	
2850, 2921	S	CH, aliphatic	
1738	S	C=O, ketone/ester	
1597	W	CH, aromatic	
1488	M	CH, aromatic	
1456	W	CH, aliphatic	
1378	M	CH, aliphatic	
1127, 1204, 1284	M	COC, ester/ketone/ether CH, aromatic	
712-822	W	CH, substituted aromatic/olefin	Multiplet
759	S	CH, substituted aliphatic	

continued

TABLE A-11 (continued).

E. LC-4

ν, cm^{-1}	Intensity	Assignment	Comment
3055	W	CH, aromatic/olefin	
2851, 2929	S	CH, aliphatic	
1710	W	C=O, ketone/ester	Broad
1379, 1456	W	CH, aliphatic	

F. LC-5

ν, cm^{-1}	Intensity	Assignment	Comment
2869-2962	S	CH, aliphatic	
1711	M	C=O, ketone/unsaturated ester	Broad
1598	M	CH, aromatic	
1465	M	CH, aliphatic	
1378	W	CH, aliphatic	
1278	M	COC, ketone	
972	W	CH, substituted aliphatic	
753	M	CH, substituted aliphatic	

G. LC-6

ν, cm^{-1}	Intensity	Assignment	Comment
3334	M	NH or OH	
2862, 2929	S	CH, aliphatic	
1731	M	C=O, ester/ketone	Broad
1458	M	CH, aliphatic	
1378	W	CH, aliphatic	
1278	W	COC, ketone	
1112	W	CN, amine OH, alcohol	
752, 806	W	CH, substituted aliphatic	

H. LC-7

ν, cm^{-1}	Intensity	Assignment	Comment
2862, 2929	S	CH, aliphatic	
1718	S	C=O, ketone/unsaturated ester	Broad
1458	M	CH, aliphatic	
1378	W	CH, aliphatic	
1092, 1278	W	COC, ester/ketone/ether	
759, 859	W	CH, substituted aliphatic	

APPENDIX B:
LRMS ANALYSIS REPORTS

TABLE B-1. LRMS REPORT, DESULFURIZATION-SASS CYCLONE DUST EXTRACT

A. LC-3

Categories	Relative Intensity
Substituted benzenes	10
Halobenzenes	1
Fused aromatics (MW <216)	1
Fused aromatics (MW >216)	1
Aliphatics	10

Major peaks (intensity) noted at m/e = 368(100), 312(10), 236(10), 221(100), and 207(100). High molecular weight hydrocarbon peak clusters 14 mass units apart, m/e = 490-580.

No evidence of fused aromatics.

Evidence of substituted benzenes shown by strong tropylium signal at m/e 91.

TABLE B-2. LRMS REPORT, DESULFURIZATION-SASS ORGANIC MODULE EXTRACT

A. LC-2

Categories	Relative Intensity
Haloaliphatics	1
Substituted benzenes	1
Halobenzenes	1
Fused aromatics (MW <216)	1
Fused aromatics (MW >216)	1
Aliphatics	100

Major peaks (intensity) noted at m/e = 368(100), 336(10), 313(10), 295(10), and 263(100). High molecular weight hydrocarbon peak clusters 14 mass units apart, m/e = 350-600.

No evidence of fused aromatics.

B. LC-3

Categories	Relative Intensity
Substituted benzenes	10
Halobenzenes	1
Fused aromatics (MW <216)	1
Fused aromatics (MW >216)	10
Aliphatics	100

Possible Identification	Molecular Weight	Relative Intensity
Idenopyrene, benzoperylene	276	10
Dibenzanthracene	278	10
Coronene	300	10

Other major peaks (intensity) were noted at m/e = 368(100), 334(10), 306(10), and 236(10). High molecular weight hydrocarbon peak clusters 14 mass units apart, m/e = 400-600.

TABLE B-3. LRMS REPORT, DESULFURIZATION-EXTRACT OF DUST COLLECTED BY BAGHOUSE

A. LC-2

Categories	Relative Intensity
Haloaliphatics	1
Substituted benzenes	1
Halobenzenes	1
Fused aromatics (MW <216)	1
Fused aromatics (MW >216)	1

Weak spectra. Only mass signals (intensity) were noted at 368(100), 258 (10), 243(10), and 236(10).

No evidence of fused aromatics.

B. LC-3

Categories	Relative Intensity
Substituted benzenes	1
Halobenzenes	1
Fused aromatics (MW <216)	10
Fused aromatics (MW >216)	100

Possible Identification	Molecular Weight	Relative Intensity
Phenanthracene, anthracene	178	100
Fluoranthene, pyrene	202	100
Benzanthracene, chrysene	228	10
Benzofluoranthene, benzo-pyrene	252	10

A strong mass peak was also noted at 368.

TABLE B-4. LRMS REPORT, BOF HOT METAL CHARGING-SASS ORGANIC MODULE EXTRACT

A. LC-3

Categories	Relative Intensity
Substituted benzenes	10
Halobenzenes	1
Fused aromatics (MW <216)	1
Fused aromatics (MW >216)	1

Major peaks (intensity) noted at m/e = 366(10), 352(10), 336(100), and 281(10).

No evidence of fused aromatics.

Evidence of substituted benzenes shown by tropylium signal at m/e 91.

TABLE B-5. LRMS REPORT, BOF OXYGEN BLOW-EXTRACT OF CLARIFIED RECYCLE WATER TO SCRUBBER

A. LC-2

Categories	Relative Intensity
Haloaliphatics	1
Substituted benzenes	1
Halobenzenes	1
Fused aromatics (MW <216)	1
Fused aromatics (MW >216)	1
Aliphatics	100

Strong hydrocarbon signals noted as two clusters 14 mass units apart appearing periodically every 74 mass units; m/e 207, 221; 281, 295;... and 577, 591 (18 ev).

No evidence of fused aromatics.

B. LC-3

Categories	Relative Intensity
Substituted benzenes	1
Halobenzenes	1
Fused aromatics (MW <216)	1
Fused aromatics (MW >216)	1
Aliphatics	100

Strong hydrocarbon signals noted as two clusters 14 mass units apart appearing periodically every 74 mass units; m/e 207, 221; 281, 295;... and 577, 591 (18 ev).

No evidence of fused aromatics.

TABLE B-6. LRMS REPORT, BOF OXYGEN BLOW-EXTRACT OF SCRUBBER DISCHARGE WATER BEFORE CLARIFICATION

A. LC-2

Categories	Relative Intensity
Haloaliphatics	1
Substituted benzenes	1
Halobenzenes	1
Fused aromatics (MW <216)	1
Fused aromatics (MW >216)	1
Aliphatics	100

Strong hydrocarbon signals noted as two clusters 14 mass units apart appearing periodically every 74 mass units; m/e 207, 221; 281, 295;... and 577, 591 (18 ev).

No evidence of fused aromatics.

B. LC-3

Categories	Relative Intensity
Substituted benzenes	1
Halobenzenes	1
Fused aromatics (MW <216)	1
Fused aromatics (MW >216)	1
Aliphatics	100

Strong hydrocarbon signals noted as two clusters 14 mass units apart appearing periodically every 74 mass units; m/e 207, 221; 281, 295;... and 577, 591 (18 ev).

No evidence of fused aromatics.

TABLE B-7. LRMS REPORT, EXTRACT OF SOLIDS FROM BOF SCRUBBER PRIMARY CLARIFIER

A. LC-3

Categories	Relative Intensity
Substituted benzenes	10
Halobenzenes	1
Fused aromatics (MW <216)	1
Fused aromatics (MW >216)	10
Aliphatics	100

Possible Identification	Molecular Weight	Relative Intensity
Benzofluoranthene, benzo-pyrene	252	10
Dibenzanthracene	278	10

Other major peaks (intensity) were noted at m/e = 368(100), 236(10), and 207(100). High molecular weight hydrocarbon peak clusters 14 mass units apart, m/e = 450-600.

Evidence of substituted benzenes shown by strong tropylium signal at m/e 91.

TABLE B-8. LRMS REPORT, EXTRACT OF SOLIDS FROM BOF SCRUBBER SECONDARY CLARIFIER

A. LC-2

Categories	Relative Intensity
Haloaliphatics	1
Substituted benzenes	1
Halobenzenes	1
Fused aromatics (MW <216)	1
Fused aromatics (MW >216)	1
Aliphatics	10

The prominent mass peak was noted at m/e = 368(100). Typical hydrocarbon peaks clusters were found at m/e = 392, 406, 420, 434, 448.

No evidence of fused aromatics.

B. LC-3

Categories	Relative Industry
Substituted benzene	1
Halobenzenes	1
Fused aromatics (MW <216)	1
Fused aromatics (MW >216)	1

The major peaks (intensity) were noted at m/e = 410(100), 396(10), 368 (100), and 350(10).

TABLE B-9. LRMS REPORT, EXTRACT OF SOLIDS COLLECTED BY BOF SECONDARY EMISSIONS CONTROL BAGHOUSE

A. LC-2

Categories	Relative Intensity
Haloaliphatics	1
Substituted benzenes	10
Halobenzenes	1
Fused aromatics (MW <216)	10
Fused aromatics (MW >216)	100

Possible Identifications	Molecular Weight	Relative Intensity
Pyrene, fluoranthene	202	100
Benzanthracene, chrysene	228	10
Benzofluoranthene, benzo-pyrene	252	100
Indenopyrene, benzoperylene	276	10

B. LC-3

Categories	Relative Intensity
Substituted benzenes	10
Halobenzenes	1
Fused aromatics (MW <216)	10
Fused aromatics (MW >216)	100

Possible Identifications	Molecular Weight	Relative Intensity
Fluoranthene, pyrene	202	10
Benzanthrene, chrysene	228	100
Benzofluoranthene, benzo-pyrene	252	100
Indenopyrene, benzoperylene	276	100
Dibenzanthracene	278	100
Dibenzopyrene	302	10
Dibenzochrysene	328	10

Mass signals (intensity) were also noted at 378(10), 368(100), 352(10), 336(10), and 326(10).

Presence of aromatic half mass peaks.

APPENDIX C:
LC ANALYSIS REPORTS

TABLE C-1. LC ANALYSIS REPORT

Sample Site Kaiser Steel, Fontana, CA Sample Acquisition Date 2/27-28/80

Type of Source External Hot Metal Desulfurization

Sample Description SASS front-half particulate-In duct before baghouse

Original Sample Volume or Mass 26.5301 grams

	TCO mg	GRAV mg	TCO + GRAV Total mg	Concentration mg/ (m^3, ~~l~~, or ~~kg~~)[5]
Total Sample[1]	3.7	13.0	16.7	3.8
Taken for LC[2]	2.1	7.5	9.6	2.2
Recovered[3]	0.8	5.4	6.2	1.4

Fraction	TCO in mg				GRAV in mg				TCO + GRAV Total mg	Concentration mg/ (m^3, ~~l~~, or kg)[5]
	Found in Fraction	Blank	Corrected	Total[4]	Found in Fraction	Blank	Corrected	Total[4]		
1	0	0	0	0	1.8	0	1.8	3.1	3.1	0.7
2	0.2	0	0.2	0.3	0	0	0	0	0.3	0.1
3	0.1	0	0.1	0.2	0.6	0	0.6	1.0	1.2	0.3
4	0	0	0	0	0	0	0	0	0	0
5	0	0	0	0	0	0	0	0	0	0
6	0.5	0	0.5	0.9	0.8	0	0.8	1.4	2.3	0.5
7	0	0	0	0	2.2	0	2.2	3.8	3.8	0.9
Sum	0.8	0	0.8	1.4	5.4	0	5.4	9.3	10.7	2.4

1. Quantity in entire sample, determined before LC.
2. Portion of whole sample used for LC, actual mg.
3. Quantity recovered from LC column, actual mg.
4. Total mg computed back to total sample.
5. Concentration at source.

TABLE C-2. LC ANALYSIS REPORT

Sample Site Kaiser Steel, Fontana, CA Sample Acquisition Date 2/27-28/80

Type of Source External Hot Metal Desulfurization

Sample Description SASS back half-Organic module and rinses

Original Sample Volume or Mass 217.06 grams resin and 640 ml rinses(4.380 Nm^3 gas)

- -

	TCO mg	GRAV mg	TCO + GRAV Total mg	Concentration mg/ (m^3, L, or kg)[5]
Total Sample[1]	5.3	21.5	26.8	6.1
Taken for LC[2]	1.7	6.9	8.6	2.0
Recovered[3]	1.4	5.1	6.5	1.5

Fraction	TCO in mg				GRAV in mg				TCO + GRAV Total mg	Concentration mg/ (m^3, L, or kg)[5]
	Found in Fraction	Blank	Corrected	Total[4]	Found in Fraction	Blank	Corrected	Total[4]		
1	0.1	0.1	0	0	1.3	0.5	0.8	2.5	2.5	0.6
2	0.2	0.2	0	0	1.6	0.3	1.3	4.1	4.1	0.9
3	0.4	0	0.4	1.2	0.6	0.6	0	0	1.2	0.3
4	0.1	0	0.1	0.3	1.0	1.0	0	0	0.3	0.1
5	0.2	0	0.2	0.7	1.0	0.6	0.4	1.2	1.9	0.4
6	0.6	0	0.6	1.7	2.6	0	2.6	8.1	9.8	2.2
7	0.1	0	0.1	0.2	3.0	3.0	0	0	0.2	0
Sum	1.7	0.3	1.4	4.1	11.1	6.0	5.1	15.9	20.0	4.6

1. Quantity in entire sample, determined before LC.
2. Portion of whole sample used for LC, actual mg.
3. Quantity recovered from LC column, actual mg.
4. Total mg computed back to total sample.
5. Concentration at source.

TABLE C-3. LC ANALYSIS REPORT

Sample Site Kaiser Steel, Fontana, CA Sample Acquisition Date 2/28/80

Type of Source External Hot Metal Desulfurization

Sample Description Dust collected by baghouse

Original Sample Volume or Mass 257.07 grams

- -

	TCO mg	GRAV mg	TCO + GRAV Total mg	Concentration mg/ (m^3, L, or kg)[5]
Total Sample[1]	5.3	21.5	26.8	104.3
Taken for LC[2]	3.7	15.0	18.7	72.7
Recovered[3]	2.5	14.4	16.9	65.7

Fraction	TCO in mg				GRAV in mg				TCO + GRAV Total mg	Concentration mg/ (m^3, L, or kg)[5]
	Found in Fraction	Blank	Corrected	Total[4]	Found in Fraction	Blank	Corrected	Total[4]		
1	0.7	0	0.7	1.1	4.8	0	4.8	6.9	8.0	31.1
2	0.2	0	0.2	0.3	1.4	0	1.4	2.0	2.3	8.9
3	0.4	0	0.4	0.6	1.8	0	1.8	2.6	3.2	12.4
4	0.1	0	0.1	0.1	1.0	0	1.0	1.4	1.5	5.8
5	0.4	0	0.4	0.5	1.2	0	1.2	1.7	2.2	8.6
6	0.6	0	0.6	0.8	2.4	0	2.4	3.4	4.2	16.3
7	0.1	0	0.1	0.1	1.8	0	1.8	2.6	2.7	10.5
Sum	2.5	0	2.5	3.5	14.4	0	14.4	20.6	24.1	93.7

1. Quantity in entire sample, determined before LC.
2. Portion of whole sample used for LC, actual mg.
3. Quantity recovered from LC column, actual mg.
4. Total mg computed back to total sample.
5. Concentration at source.

TABLE C-4. LC ANALYSIS REPORT

Sample Site Kaiser Steel, Fontana, CA Sample Acquisition Date 4/8-12/80

Type of Source BOF - Hot Metal Addition

Sample Description SASS back half-Organic module and rinses

Original Sample Volume or Mass 113.48 grams and 168 ml rinses (2.795 Nm^3 gas)

- -

	TCO mg	GRAV mg	TCO + GRAV Total mg	Concentration mg/ (m^3, ~~L~~, or ~~kg~~)[5]
Total Sample[1]	7.1	15.0	22.1	7.9
Taken for LC[2]	5.7	12.0	17.7	6.3
Recovered[3]	1.7	8.4	10.1	3.6

Fraction	TCO in mg				GRAV in mg				TCO + GRAV Total mg	Concentration mg/ (m^3, ~~L~~, or ~~kg~~)[5]
	Found in Fraction	Blank	Corrected	Total[4]	Found in Fraction	Blank	Corrected	Total[4]		
1	0.4	0.2	0.2	0.3	1.0	0.3	0.7	0.9	1.2	0.4
2	0.3	0.1	0.2	0.3	0.4	0.2	0.2	0.3	0.6	0.2
3	0.3	0	0.3	0.3	1.2	0.5	0.7	0.9	1.2	0.4
4	0	0	0	0	1.8	0.5	1.3	1.6	1.6	0.6
5	0.1	0	0.1	0.1	1.4	0.3	1.1	1.4	1.5	0.5
6	0.9	0	0.9	1.1	4.4	0	4.4	5.5	6.6	2.4
7	0	0	0	0	2.4	2.4	0	0	0	0
Sum	2.0	0.3	1.7	2.1	12.6	4.2	8.4	10.6	12.7	4.5

1. Quantity in entire sample, determined before LC.
2. Portion of whole sample used for LC, actual mg.
3. Quantity recovered from LC column, actual mg.
4. Total mg computed back to total sample.
5. Concentration at source.

TABLE C-5. LC ANALYSIS REPORT

Sample Site Kaiser Steel, Fontana, CA Sample Acquisition Date 4/12/80

Type of Source BOF

Sample Description Blank-Organic resin

Original Sample Volume or Mass 116 grams resin-(concentrations corrected to 113.48 grams resins and 2.795 Nm^3 gas)

	TCO mg	GRAV mg	TCO + GRAV Total mg	Concentration mg/ (m^3, ~~L~~, or ~~kg~~)[5]
Total Sample[1]	2.2	5.0	7.2	1.8
Taken for LC[2]	1.8	4.0	5.8	1.4
Recovered[3]	0.3	5.1	5.4	1.3

Fraction	TCO in mg				GRAV in mg				TCO + GRAV Total mg	Concentration mg/ (m^3, ~~L~~, or ~~kg~~)[5]
	Found in Fraction	Blank	Corrected	Total[4]	Found in Fraction	Blank	Corrected	Total[4]		
1	0.1	0	0.1	0.2	0.3	0	0.3	0.4	0.6	0.1
2	0.1	0	0.1	0.1	0.2	0	0.2	0.3	0.4	0.1
3	0	0	0	0	0.6	0	0.6	0.8	0.8	0.2
4	0	0	0	0	0.6	0	0.6	0.8	0.8	0.2
5	0	0	0	0	0.4	0	0.4	0.5	0.5	0.1
6	0	0	0	0	0	0	0	0	0	0
7	0	0	0	0	3.0	0	3.0	3.7	3.7	0.9
Sum	0.2	0	0.2	0.3	5.1	0	5.1	6.5	6.8	1.7

1. Quantity in entire sample, determined before LC.
2. Portion of whole sample used for LC, actual mg.
3. Quantity recovered from LC column, actual mg.
4. Total mg computed back to total sample.
5. Concentration at source.

TABLE C-6. LC ANALYSIS REPORT

Sample Site Kaiser Steel, Fontana, CA Sample Acquisition Date 4/10/80

Type of Source BOF

Sample Description Dust collected from secondary emissions control baghouse.

Original Sample Volume or Mass 430.12 grams

- -

	TCO mg	GRAV mg	TCO + GRAV Total mg	Concentration mg/ (m^3, L, or kg)[5]
Total Sample[1]	6.6	225	231.6	538.5
Taken for LC[2]	2.9	99.0	101.9	236.9
Recovered[3]	3.1	98.5	101.6	236.2

Fraction	TCO in mg				GRAV in mg				TCO + GRAV Total mg	Concentration mg/ (m^3, L, or kg)[5]
	Found in Fraction	Blank	Corrected	Total[4]	Found in Fraction	Blank	Corrected	Total[4]		
1	0.5	0	0.5	1.2	31.5	0	31.5	71.6	72.8	169.3
2	0.2	0	0.2	0.4	4.2	0	4.2	9.5	9.9	23.0
3	1.2	0	1.2	2.7	17.6	0	17.6	40.0	42.7	99.3
4	0.1	0	0.1	0.1	3.8	0	3.8	8.6	8.7	20.2
5	0	0	0	0	3.6	0	3.6	8.2	8.2	19.1
6	0.2	0	0.2	0.5	16.8	0	16.8	38.2	38.7	90.0
7	0.9	0	0.9	2.0	21.0	0	21.0	47.8	49.8	115.8
Sum	3.1	0	3.1	6.9	98.5	0	98.5	223.9	230.8	536.6

1. Quantity in entire sample, determined before LC.
2. Portion of whole sample used for LC, actual mg.
3. Quantity recovered from LC column, actual mg.
4. Total mg computed back to total sample.
5. Concentration at source.

TABLE C-7. LC ANALYSIS REPORT

Sample Site Kaiser Steel, Fontana, CA Sample Acquisition Date 4/21/80

Type of Source BOF

Sample Description Water discharge from scrubber-during oxygen blow.

Original Sample Volume or Mass 1976 ML

	TCO mg	GRAV mg	TCO + GRAV Total mg	Concentration mg/ (m^3, L, or kg)[5]
Total Sample[1]	4.3	38.0	42.3	21.4
Taken for LC[2]	2.5	22.8	25.3	12.8
Recovered[3]	2.8	16.2	19.0	9.6

Fraction	TCO in mg				GRAV in mg				TCO + GRAV Total mg	Concentration mg/ (m^3, L, or kg)[5]
	Found in Fraction	Blank	Corrected	Total[4]	Found in Fraction	Blank	Corrected	Total[4]		
1	0	0	0	0	0.8	0	0.8	1.3	1.3	0.7
2	0.7	0	0.7	1.1	1.2	0	1.2	2.0	3.1	1.6
3	0.4	0	0.4	0.6	4.2	0	4.2	7.0	7.6	3.8
4	0.3	0	0.3	0.5	0.8	0	0.8	1.3	1.8	0.9
5	0.2	0	0.2	0.3	0.4	0	0.4	0.7	1.0	0.5
6	1.2	0	1.2	1.9	3.6	0	3.6	6.0	7.9	4.0
7	0	0	0	0	5.2	0	5.2	8.7	8.7	4.4
Sum	2.8	0	2.8	4.4	16.2	0	16.2	27.0	31.4	15.9

1. Quantity in entire sample, determined before LC.
2. Portion of whole sample used for LC, actual mg.
3. Quantity recovered from LC column, actual mg.
4. Total mg computed back to total sample.
5. Concentration at source.

TABLE C-8. LC ANALYSIS REPORT

Sample Site Kaiser Steel, Fontana, CA Sample Acquisition Date 4/21/80

Type of Source BOF

Sample Description Clarified recycle water to scrubber-during oxygen blow

Original Sample Volume or Mass 2136 ml

	TCO mg	GRAV mg	TCO + GRAV Total mg	Concentration mg/ (m^3, L, or kg)[5]
Total Sample[1]	1.5	38.0	39.5	18.5
Taken for LC[2]	0.7	19.2	19.9	9.3
Recovered[3]	0.6	14.9	15.5	7.3

Fraction	TCO in mg				GRAV in mg				TCO + GRAV Total mg	Concentration mg/ (m^3, L, or kg)[5]
	Found in Fraction	Blank	Corrected	Total[4]	Found in Fraction	Blank	Corrected	Total[4]		
1	0	0	0	0	0.5	0	0.5	1.0	1.0	0.5
2	0.2	0	0.2	0.3	2.8	0	2.8	5.6	5.9	2.8
3	0.1	0	0.1	0.2	4.8	0	4.8	9.5	9.7	4.5
4	0.1	0	0.1	0.2	0	0	0	0	0.2	0.1
5	0.1	0	0.1	0.2	0.8	0	0.8	1.6	1.8	0.8
6	0.1	0	0.1	0.2	3.0	0	3.0	5.9	6.1	2.9
7	0	0	0	0	3.0	0	3.0	5.9	5.9	2.8
Sum	0.6	0	0.6	1.1	14.9	0	14.9	29.5	30.6	14.3

1. Quantity in entire sample, determined before LC.
2. Portion of whole sample used for LC, actual mg.
3. Quantity recovered from LC column, actual mg.
4. Total mg computed back to total sample.
5. Concentration at source.

TABLE C-9. LC ANALYSIS REPORT

Sample Site Kaiser Steel, Fontana, CA Sample Acquisition Date 4/8-10/80

Type of Source BOF

Sample Description Solids from primary clarifier-BOF scrubber water treatment system

Original Sample Volume or Mass 1424 grams

	TCO mg	GRAV mg	TCO + GRAV Total mg	Concentration mg/ (m^3, L, or kg)[5]
Total Sample[1]	0.1	10.0	10.1	7.1
Taken for LC[2]	0.1	8.0	8.1	5.7
Recovered[3]	0	7.2	7.2	5.1

Fraction	TCO in mg				GRAV in mg				TCO + GRAV Total mg	Concentration mg/ (m^3, L, or kg)[5]
	Found in Fraction	Blank	Corrected	Total[4]	Found in Fraction	Blank	Corrected	Total[4]		
1	0	0		0	2.0	0	2.0	2.5	2.5	1.8
2	0	0		0	0	0	0	0	0	0
3	0	0		0	0.8	0	0.8	1.0	1.0	0.7
4	0	0		0	1.0	0	1.0	1.3	1.3	0.9
5	0	0		0	0.6	0	0.6	0.8	0.8	0.6
6	0	0		0	0.6	0	0.6	0.8	0.8	0.6
7	0	0		0	2.2	0	2.2	2.8	2.8	2.0
Sum	0	0		0	7.2	0	7.2	9.2	9.2	6.5

1. Quantity in entire sample, determined before LC.
2. Portion of whole sample used for LC, actual mg.
3. Quantity recovered from LC column, actual mg.
4. Total mg computed back to total sample.
5. Concentration at source.

TABLE C-10. LC ANALYSIS REPORT

Sample Site Kaiser Steel, Fontana, CA Sample Acquisition Date 4/9-10/80

Type of Source BOF

Sample Description Solids from secondary clarifier-BOF scrubber water treatment system

Original Sample Volume or Mass 349.4 grams

	TCO mg	GRAV mg	TCO + GRAV Total mg	Concentration mg/ (m^3, ℓ, or kg)[5]
Total Sample[1]	0.6	22.5	23.1	66.1
Taken for LC[2]	0.4	15.0	15.4	44.1
Recovered[3]	0.4	16.0	16.4	46.9

Fraction	TCO in mg				GRAV in mg				TCO + GRAV Total mg	Concentration mg/ (m^3, ℓ, or kg)[5]
	Found in Fraction	Blank	Corrected	Total[4]	Found in Fraction	Blank	Corrected	Total[4]		
1	0	0	0	0	10.8	0	10.8	16.2	16.2	46.4
2	0	0	0	0	0.8	0	0.8	1.2	1.2	3.4
3	0	0	0	0	0.4	0	0.4	0.6	0.6	1.7
4	0	0	0	0	0.2	0	0.2	0.3	0.3	0.9
5	0	0	0	0	0.6	0	0.6	0.9	0.9	2.6
6	0.4	0	0.4	0.5	1.0	0	1.0	1.5	2.0	5.7
7	0	0	0	0	2.2	0	2.2	3.3	3.3	9.4
Sum	0.4	0	0.4	0.5	16.0	0	16.0	24.0	24.5	70.1

1. Quantity in entire sample, determined before LC.
2. Portion of whole sample used for LC, actual mg.
3. Quantity recovered from LC column, actual mg.
4. Total mg computed back to total sample.
5. Concentration at source.

APPENDIX D:
SSMS ORIGINAL DATA

COMMERCIAL TESTING & ENGINEERING CO.

GENERAL OFFICES 228 NORTH LA SALLE STREET, CHICAGO, ILLINOIS 60601 · AREA CODE 312 726-8434
Reply to INSTRUMENTAL ANALYSIS DIVISION, 14335 WEST 44TH AVENUE, GOLDEN, COLORADO 80401, PHONE 303-278-9521

To: Mr. Robert Handy
Research Triangle Inst.
P.O. Box 12194
Research Triangle Park, NC 27709

Date September 2, 1980

Analyst T. Bouts

P. O. No.: HMDS - SASS front half particulate

Sample No.: 2553-24A-E

SPARK SOURCE MASS SPECTROGRAPHIC ANALYSIS

IAD No 97-E610-296-11

CONCENTRATION IN PPM WEIGHT

ELEMENT	CONC.	ELEMENT	CONC.	ELEMENT	CONC.	ELEMENT	CONC
Uranium	1	Terbium	<0.1	Ruthenium		Vanadium	6
Thorium	2	Gadolinium	0.2	Molybdenum	3	Titanium	170
Bismuth		Europium	0.1	Niobium	0.9	Scandium	2
Lead	21	Samarium	0.8	Zirconium	8	Calcium	MC
Thallium		Neodymium	1	Yttrium	4	Potassium	MC
Mercury	* 0.04	Praseodymium	1	Strontium	210	Chlorine	130
Gold		Cerium	8	Rubidium	11	Sulfur	MC
Platinum		Lanthanum	8	Bromine	5	Phosphorus	220
Iridium		Barium	140	Selenium	≤0.7	Silicon	MC
Osmium		Cesium	0.2	Arsenic	27	Aluminum	MC
Rhenium		Iodine	0.2	Germanium	0.3	Magnesium	MC
Tungsten		Tellurium	≤0.2	Gallium	0.8	Sodium	MC
Tantalum		Antimony	** 5	Zinc	MC	Fluorine	≈200
Hafnium		Tin	0.4	Copper	26	Oxygen	NR
Lutetium		Indium	STD	Nickel	8	Nitrogen	NR
Ytterbium		Cadmium		Cobalt	1	Carbon	NR
Thulium		Silver	** 20	Iron	MC	Boron	0.4
Erbium		Palladium		Manganese	>600	Beryllium	<0.1
Holmium		Rhodium		Chromium	9	Lithium	0.7
Dysprosium	0.3					Hydrogen	NR

STD — Internal Standard
NR — Not Reported
All elements not detected < 0.1 ppm weight
MC — Major Component

Approved:

* Flameless Atomic Absorption
** Heterogeneous

COMMERCIAL TESTING & ENGINEERING CO.

GENERAL OFFICES 228 NORTH LA SALLE STREET, CHICAGO, ILLINOIS 60601 · AREA CODE 312 726-8434
Reply to INSTRUMENTAL ANALYSIS DIVISION, 14335 WEST 44TH AVENUE, GOLDEN, COLORADO 80401, PHONE 303-278-9521

To: Dr. Robert Handy
Research Triangle Inst.
P.O. Box 12194
Research Triangle Park, NC 27709

Hot metal desulfurization – SASS impinger 1 sample

Date August 25, 1980

Analyst T. Bouts

P. O. No.:

Sample No.: 2553-24G

SPARK SOURCE MASS SPECTROGRAPHIC ANALYSIS

IAD No 97-E610-296-11

CONCENTRATION IN µg/ml

ELEMENT	CONC.	ELEMENT	CONC.	ELEMENT	CONC.	ELEMENT	CONC
Uranium		Terbium		Ruthenium		Vanadium	<0.001
Thorium		Gadolinium		Molybdenum	0.07	Titanium	0.09
Bismuth		Europium		Niobium		Scandium	<0.001
Lead	≤0.01	Samarium		Zirconium	0.008	Calcium	7
Thallium		Neodymium		Yttrium		Potassium	0.4
Mercury	*0.09	Praseodymium		Strontium	0.01	Chlorine	0.1
Gold		Cerium		Rubidium	<0.001	Sulfur	4
Platinum		Lanthanum	≤0.01	Bromine	0.1	Phosphorus	1
Iridium		Barium	≤0.03	Selenium		Silicon	2
Osmium		Cesium		Arsenic		Aluminum	0.1
Rhenium		Iodine	≤0.003	Germanium		Magnesium	0.1
Tungsten		Tellurium		Gallium		Sodium	0.7
Tantalum		Antimony		Zinc	0.1	Fluorine	≈0.4
Hafnium		Tin		Copper	0.1	Oxygen	NR
Lutetium		Indium	STD	Nickel	0.03	Nitrogen	NR
Ytterbium		Cadmium		Cobalt	0.007	Carbon	NR
Thulium		Silver	0.01	Iron	0.6	Boron	0.006
Erbium		Palladium		Manganese	0.006	Beryllium	
Holmium		Rhodium		Chromium	0.01	Lithium	<0.001
Dysprosium						Hydrogen	NR

STD — Internal Standard
NR — Not Reported
All elements not detected < 0.002 µg/ml
MC — Major Component

*Flameless Atomic Absorption

Approved: M Hacker

COMMERCIAL TESTING & ENGINEERING CO.

GENERAL OFFICES· 228 NORTH LA SALLE STREET, CHICAGO, ILLINOIS 60601 AREA CODE 312 726-8434
Reply to INSTRUMENTAL ANALYSIS DIVISION, 14335 WEST 44TH AVENUE, GOLDEN, COLORADO 80401, PHONE 303-278-9521

To: Mr. Robert Handy
Research Triangle Inst.
P.O. Box 12194
Research Triangle Park, NC 27709

Hot Metal Desulfurization - Baghouse dust

Date September 2, 1980

Analyst T. Bouts

P. O. No.:

Sample No.: 2553-24N

SPARK SOURCE MASS SPECTROGRAPHIC ANALYSIS

IAD No 97-E610-296-11

CONCENTRATION IN PPM WEIGHT

ELEMENT	CONC.	ELEMENT	CONC	ELEMENT	CONC	ELEMENT	CONC
Uranium	2	Terbium		Ruthenium		Vanadium	21
Thorium	2	Gadolinium		Molybdenum	4	Titanium	730
Bismuth	0.9	Europium		Niobium	3	Scandium	0.8
Lead	110	Samarium	0.7	Zirconium	9	Calcium	MC
Thallium		Neodymium	2	Yttrium	5	Potassium	MC
Mercury	* 0.07	Praseodymium	0.7	Strontium	230	Chlorine	790
Gold		Cerium	8	Rubidium	12	Sulfur	MC
Platinum		Lanthanum	6	Bromine	10	Phosphorus	MC
Iridium		Barium	150	Selenium	≤2	Silicon	MC
Osmium		Cesium	0.7	Arsenic	58	Aluminum	MC
Rhenium		Iodine	26	Germanium	0.3	Magnesium	MC
Tungsten		Tellurium		Gallium	2	Sodium	MC
Tantalum		Antimony	1	Zinc	MC	Fluorine	≈220
Hafnium		Tin	1	Copper	42	Oxygen	NR
Lutetium		Indium	STD	Nickel	12	Nitrogen	NR
Ytterbium		Cadmium		Cobalt	3	Carbon	NR
Thulium		Silver	1	Iron	MC	Boron	1
Erbium		Palladium		Manganese	MC	Beryllium	<0.1
Holmium		Rhodium		Chromium	16	Lithium	0.8
Dysprosium						Hydrogen	NR

STD — Internal Standard
NR — Not Reported
All elements not detected < 0.1 ppm weight
MC — Major Component

Approved:

* Flameless Atomic Absorption

COMMERCIAL TESTING & ENGINEERING CO.

GENERAL OFFICES 228 NORTH LA SALLE STREET, CHICAGO, ILLINOIS 60601 · AREA CODE 312 728-8434
Reply to INSTRUMENTAL ANALYSIS DIVISION, 14335 WEST 44TH AVENUE, GOLDEN, COLORADO 80401, PHONE 303-278-9521

To: Dr. Robert Handy
Research Triangle Inst.
P.O. Box 12194
Research Triangle Park, NC 27709

BOF Hot metal Charging - SASS Particulates

Date August 25, 1980

Analyst T. Bouts

P. O. No.:

Sample No.: 2553-25-E→H cyclone dust

SPARK SOURCE MASS SPECTROGRAPHIC ANALYSIS
CONCENTRATION IN PPM WEIGHT

IAD No 97-E610-296-11

ELEMENT	CONC.	ELEMENT	CONC	ELEMENT	CONC	ELEMENT	CONC
Uranium	11	Terbium		Ruthenium		Vanadium	96
Thorium	<11	Gadolinium		Molybdenum	**95	Titanium	MC
Bismuth	4	Europium		Niobium	13	Scandium	≤0.7
Lead	MC	Samarium		Zirconium	33	Calcium	MC
Thallium		Neodymium		Yttrium	≤3	Potassium	MC
Mercury	*1.05	Praseodymium		Strontium	20	Chlorine	MC
Gold		Cerium	**30	Rubidium	11	Sulfur	79
Platinum		Lanthanum	11	Bromine	440	Phosphorus	MC
Iridium		Barium	MC	Selenium	**62	Silicon	MC
Osmium		Cesium	0.8	Arsenic	59	Aluminum	MC
Rhenium		Iodine		Germanium	1	Magnesium	MC
Tungsten		Tellurium	19	Gallium	42	Sodium	MC
Tantalum		Antimony	8	Zinc	MC	Fluorine	MC
Hafnium		Tin	23	Copper	230	Oxygen	NR
Lutetium		Indium	STD	Nickel	45	Nitrogen	NR
Ytterbium		Cadmium	93	Cobalt	22	Carbon	NR
Thulium		Silver	21	Iron	MC	Boron	32
Erbium		Palladium		Manganese	MC	Beryllium	
Holmium		Rhodium		Chromium	650	Lithium	2
Dysprosium						Hydrogen	NR

*Flameless Atomic Absorption
**Heterogeneous

STD — Internal Standard
NR — Not Reported
All elements not detected < 1 ppm

Approved: M M Schwarz

COMMERCIAL TESTING & ENGINEERING CO.

GENERAL OFFICES 228 NORTH LA SALLE STREET, CHICAGO, ILLINOIS 60601 AREA CODE 312 726-8434
Reply to INSTRUMENTAL ANALYSIS DIVISION, 14335 WEST 44TH AVENUE, GOLDEN, COLORADO 80401, PHONE 303-278-9521

To: Dr. Robert Handy
Research Triangle Inst.
P.O. Box 12194
Research Triangle Park, NC 27709

BOF Hot metal charge - SASS Impinger Sample

Date August 25, 1980

Analyst T. Bouts

P. O. No.:

Sample No.: 2553-25M-Imp. SPARK SOURCE MASS SPECTROGRAPHIC ANALYSIS

IAD No 97-E610-296-11

CONCENTRATION IN µg/ml

ELEMENT	CONC.	ELEMENT	CONC.	ELEMENT	CONC	ELEMENT	CONC
Uranium		Terbium		Ruthenium		Vanadium	0.01
Thorium		Gadolinium		Molybdenum	0.07	Titanium	0.2
Bismuth		Europium		Niobium	≤0.005	Scandium	0.02
Lead	0.07	Samarium		Zirconium	0.03	Calcium	MC
Thallium		Neodymium		Yttrium		Potassium	MC
Mercury	*≤0.05	Praseodymium		Strontium	≤0.03	Chlorine	6
Gold		Cerium	**0.03	Rubidium	≤0.003	Sulfur	MC
Platinum		Lanthanum	**0.05	Bromine	0.1	Phosphorus	0.8
Iridium		Barium	0.2	Selenium	0.07	Silicon	3
Osmium		Cesium	0.005	Arsenic	≤0.008	Aluminum	1
Rhenium		Iodine	0.02	Germanium	0.008	Magnesium	2
Tungsten		Tellurium		Gallium		Sodium	MC
Tantalum		Antimony		Zinc	2	Fluorine	≈2
Hafnium		Tin	0.04	Copper	0.1	Oxygen	NR
Lutetium		Indium	STD	Nickel	0.6	Nitrogen	NR
Ytterbium		Cadmium	0.008	Cobalt	0.03	Carbon	NR
Thulium		Silver	MC	Iron	6	Boron	0.002
Erbium		Palladium		Manganese	0.2	Beryllium	
Holmium		Rhodium		Chromium	0.7	Lithium	0.005
Dysprosium						Hydrogen	NR

STD — Internal Standard
NR — Not Reported
All elements not detected < 0.04 µg/ml
MC — Major Component
INT — Interference

*Flameless Atomic Absorption
**Heterogeneous

Approved: MS

COMMERCIAL TESTING & ENGINEERING CO.

GENERAL OFFICES 228 NORTH LA SALLE STREET, CHICAGO, ILLINOIS 60601 AREA CODE 312 726-8434
Reply to INSTRUMENTAL ANALYSIS DIVISION, 14335 WEST 44TH AVENUE, GOLDEN, COLORADO 80401, PHONE 303-278 9521

To: Dr. Robert Handy
Research Triangle Institute
P.O. Box 12194
Research Triangle Park, NC 27709

BOF hot metal charge - SASS Impinger 1 blank

Date August 25, 1980

Analyst T. Bouts

P. O. No.:

Sample No.: 2553-250
Imp. blank

SPARK SOURCE MASS SPECTROGRAPHIC ANALYSIS

CONCENTRATION IN μg/ml

IAD No 97-E610-296-11

ELEMENT	CONC.	ELEMENT	CONC.	ELEMENT	CONC	ELEMENT	CONC
Uranium		Terbium		Ruthenium		Vanadium	0.007
Thorium		Gadolinium		Molybdenum	0.1	Titanium	0.1
Bismuth		Europium		Niobium		Scandium	<0.001
Lead	0.03	Samarium		Zirconium		Calcium	MC
Thallium		Neodymium		Yttrium		Potassium	2
Mercury	*≤0.07	Praseodymium		Strontium	0.5	Chlorine	0.9
Gold		Cerium		Rubidium		Sulfur	7
Platinum		Lanthanum		Bromine	0.1	Phosphorus	1
Iridium		Barium	0.04	Selenium		Silicon	1
Osmium		Cesium		Arsenic	≤0.002	Aluminum	1
Rhenium		Iodine	≤0.004	Germanium	≤0.005	Magnesium	0.6
Tungsten		Tellurium		Gallium		Sodium	0.6
Tantalum		Antimony		Zinc	5	Fluorine	≈4
Hafnium		Tin	≤0.008	Copper	0.2	Oxygen	NR
Lutetium		Indium	STD	Nickel	0.06	Nitrogen	NR
Ytterbium		Cadmium		Cobalt	≤0.005	Carbon	NR
Thulium		Silver	**0.4	Iron	0.8	Boron	0.01
Erbium		Palladium		Manganese	0.04	Beryllium	0.01
Holmium		Rhodium		Chromium	0.09	Lithium	0.005
Dysprosium						Hydrogen	NR

STD — Internal Standard
NR — Not Reported
All elements not detected < 0.003 μg/ml
MC — Major Component

*Flameless Atomic Absorption
**Heterogeneous

Approved: M. Y. Jacobs

COMMERCIAL TESTING & ENGINEERING CO.
GENERAL OFFICES. 228 NORTH LA SALLE STREET, CHICAGO, ILLINOIS 60601 AREA CODE 312 726-8434

SINCE 1908

Reply to
Instrumental Analysis Division
490 Orchard Street
Golden, CO 80401

Phone. 303-278-9521

September 18, 1980

Robert Handy, Ph.D.
Research Triangle Institute
P.O. Box 12194
Research Triangle Park, NC 27709

RE: IAD #97-E610-296-11

ANALYTICAL REPORT

Eleven samples were received for analysis on June 9, 1980 and given our log number IAD 97-E610-296-11.

Two of the eleven samples were to be analyzed for mercury only. They were analyzed using double gold amalgamation - flameless atomic absorption. Analytical results are presented below and are expressed in micro grams per liter (µg/l).

Sample #	Mercury, µg/l
2553-25N-Imp. 2,3	≤0.05 BOF Hot metal charging
2553-26A-Imp. 2,3 -Blank	≤0.05

Net Hg in Impingers 2,3 = 0

If you have any questions concerning this analysis, please call.

James Oldham
Section Supervisor

M. L. Jacobs, Ph.D., Mngr.
Instrumental Analysis Div.

JO/ams

COMMERCIAL TESTING & ENGINEERING CO.

GENERAL OFFICES 228 NORTH LA SALLE STREET, CHICAGO, ILLINOIS 60601 AREA CODE 312 726-8434
Reply to INSTRUMENTAL ANALYSIS DIVISION, 14335 WEST 44TH AVENUE, GOLDEN, COLORADO 80401, PHONE 303-278-9521

To: Mr. Robert Handy
Research Triangle Inst.
P.O. Box 12194
Research Triangle Park, NC 27709

Date September 2, 1980

BOF Secondary Emissions Control baghouse dust

Analyst T. Bouts

P. O. No.:

Sample No.: 2553-26G SPARK SOURCE MASS SPECTROGRAPHIC ANALYSIS IAD No 97-E610-296-11

CONCENTRATION IN PPM WEIGHT

ELEMENT	CONC.	ELEMENT	CONC.	ELEMENT	CONC.	ELEMENT	CONC
Uranium	0.7	Terbium		Ruthenium		Vanadium	74
Thorium	0.8	Gadolinium		Molybdenum	5	Titanium	570
Bismuth	4	Europium		Niobium	6	Scandium	0.1
Lead	890	Samarium	0.3	Zirconium	11	Calcium	MC
Thallium	4	Neodymium	0.5	Yttrium	1	Potassium	MC
Mercury	* 2.58	Praseodymium	0.6	Strontium	63	Chlorine	MC
Gold		Cerium	6	Rubidium	56	Sulfur	MC
Platinum		Lanthanum	4	Bromine	42	Phosphorus	MC
Iridium		Barium	100	Selenium	8	Silicon	MC
Osmium		Cesium	5	Arsenic	200	Aluminum	MC
Rhenium		Iodine	≤0.5	Germanium	4	Magnesium	MC
Tungsten	0.9	Tellurium		Gallium	65	Sodium	MC
Tantalum		Antimony	10	Zinc	MC	Fluorine	MC
Hafnium		Tin	18	Copper	MC	Oxygen	NR
Lutetium		Indium	STD	Nickel	40	Nitrogen	NR
Ytterbium		Cadmium	** 29	Cobalt	15	Carbon	NR
Thulium		Silver	9	Iron	MC	Boron	2
Erbium		Palladium		Manganese	MC	Beryllium	
Holmium		Rhodium		Chromium	MC	Lithium	0.2
Dysprosium						Hydrogen	NR

STD — Internal Standard
NR — Not Reported
All elements not detected < 0.1 ppm weight
MC — Major Component

Approved: M. Spacco

* Flameless Atomic Absorption
** Heterogeneous

COMMERCIAL TESTING & ENGINEERING CO.

GENERAL OFFICES: 228 NORTH LA SALLE STREET, CHICAGO, ILLINOIS 60601 AREA CODE 312 726-8434
Reply to INSTRUMENTAL ANALYSIS DIVISION, 14335 WEST 44TH AVENUE, GOLDEN, COLORADO 80401, PHONE 303-278-9521

To: Mr. Robert Handy
Research Triangle Inst.
P.O. Box 12194
Research Triangle Park, NC 27709

Date September 2, 1980

BOF Primary control system - clarified Recycle water

Analyst T. Bouts

P. O. No.:

Sample No.: 2553-25-~~A~~C RSW

SPARK SOURCE MASS SPECTROGRAPHIC ANALYSIS

IAD No 97-E610-296-11

CONCENTRATION IN µg/ml

ELEMENT	CONC.	ELEMENT	CONC.	ELEMENT	CONC.	ELEMENT	CONC.
Uranium	<0.006	Terbium		Ruthenium		Vanadium	0.02
Thorium	<0.008	Gadolinium		Molybdenum	≤0.02	Titanium	0.1
Bismuth		Europium		Niobium	0.004	Scandium	<0.001
Lead	0.2	Samarium		Zirconium	≤0.006	Calcium	MC
Thallium		Neodymium		Yttrium	0.001	Potassium	MC
Mercury	NR	Praseodymium		Strontium	0.06	Chlorine	MC
Gold		Cerium	0.002	Rubidium	0.8	Sulfur	MC
Platinum		Lanthanum		Bromine	0.08	Phosphorus	MC
Iridium		Barium	0.04	Selenium	≤0.02	Silicon	6
Osmium		Cesium	0.03	Arsenic	0.04	Aluminum	0.3
Rhenium		Iodine	0.02	Germanium	0.02	Magnesium	10
Tungsten		Tellurium		Gallium	0.02	Sodium	MC
Tantalum		Antimony	0.007	Zinc	0.6	Fluorine	≈8
Hafnium		Tin	0.07	Copper	0.3	Oxygen	NR
Lutetium		Indium	STD	Nickel	0.004	Nitrogen	NR
Ytterbium		Cadmium	≤0.002	Cobalt	0.002	Carbon	NR
Thulium		Silver	≤0.002	Iron	MC	Boron	0.004
Erbium		Palladium		Manganese	3	Beryllium	
Holmium		Rhodium		Chromium	0.05	Lithium	0.001
Dysprosium						Hydrogen	NR

STD — Internal Standard
NR — Not Reported
All elements not detected < 0.001 µg/ml
MC — Major Component >10µg/ml
INT — Interference

Approved: M. Coles

COMMERCIAL TESTING & ENGINEERING CO.

GENERAL OFFICES· 228 NORTH LA SALLE STREET, CHICAGO, ILLINOIS 60601 AREA CODE 312 726-8434
Reply to INSTRUMENTAL ANALYSIS DIVISION, 14335 WEST 44TH AVENUE, GOLDEN, COLORADO 80401, PHONE 303-278 9521

To: Mr. Robert Handy
Research Triangle Inst.
P.O. Box 12194
Research Triangle Park, NC 27709

Date September 2, 1980

BOF Primary Control System - Scrubber discharge water

Analyst T. Bouts

P. O. No.:

Sample No.: 2553-25 0 ~~8~~SWD

SPARK SOURCE MASS SPECTROGRAPHIC ANALYSIS

IAD No 97-E610-296-11

CONCENTRATION IN μg/ml

ELEMENT	CONC.	ELEMENT	CONC.	ELEMENT	CONC.	ELEMENT	CONC
Uranium	<0.01	Terbium		Ruthenium		Vanadium	0.1
Thorium	<0.01	Gadolinium		Molybdenum	0.06	Titanium	0.3
Bismuth	0.005	Europium		Niobium	0.02	Scandium	≤0.002
Lead	3	Samarium		Zirconium	0.009	Calcium	MC
Thallium		Neodymium		Yttrium	0.002	Potassium	MC
Mercury	NR	Praseodymium		Strontium	0.06	Chlorine	MC
Gold		Cerium	0.007	Rubidium	0.5	Sulfur	>9
Platinum		Lanthanum		Bromine	0.3	Phosphorus	MC
Iridium		Barium	0.2	Selenium	≤0.03	Silicon	MC
Osmium		Cesium	0.02	Arsenic	0.2	Aluminum	1
Rhenium		Iodine	0.02	Germanium	0.03	Magnesium	MC
Tungsten	≤0.008	Tellurium		Gallium	0.5	Sodium	MC
Tantalum		Antimony	0.02	Zinc	7	Fluorine	MC
Hafnium		Tin	0.1	Copper	0.8	Oxygen	NR
Lutetium		Indium	STD	Nickel	0.1	Nitrogen	NR
Ytterbium		Cadmium	0.005	Cobalt	0.04	Carbon	NR
Thulium		Silver	0.1	Iron	MC	Boron	0.009
Erbium		Palladium		Manganese	MC	Beryllium	
Holmium		Rhodium		Chromium	0.8	Lithium	0.02
Dysprosium						Hydrogen	NR

STD — Internal Standard
NR — Not Reported
All elements not detected < 0.001 μg/ml
MC — Major Component >10μg/ml

Approved. M. H. Jacobs