SUMMARY REPORT - FLUE GAS DESULFURIZATION SYSTEMS - NOVEMBER - DECEMBER 1976

PREPARED BY

PEDCO-ENVIRONMENTAL INC.
11499 CHESTER ROAD
CINCINNATI, OHIO 45246

PREPARED FOR
DIVISION OF STATIONARY SOURCE ENFORCEMENT
AND
INDUSTRIAL ENVIRONMENTAL RESEARCH LABORATORY
U.S. ENVIRONMENTAL PROTECTION AGENCY
RESEARCH TRIANGLE PARK,
NORTH CAROLNA 27711

CONTRACT NO. 68-02-1321
TASK NO. 28

TABLE 1

SUMMARY LIST OF FGD SYSTEMS

TABLE 1
SUMMARY LIST OF FGD SYSTEMS

FGD STATUS REPORT 12/76

I.D. NUMBER	AND COMPANY NAME	UNIT NAME	LOCATION	START UP DATE	STATUS	REG CLASS
1	ALABAMA ELECTRIC COOP	TOMBIGBEE NO. 2	JACKSON ALABAMA	3-78	2	A
2	ALABAMA ELECTRIC COOP	TOMBIGBEE NO. 3	JACKSON ALABAMA	3-79	2	A
3	ALLEGHENY POWER SYSTEM	PLEASANTS NO. 1	BELLMONT W VIRGINIA	3-79	2	A
4	ALLEGHENY POWER SYSTEM	PLEASANTS NO. 2	BELLMONT W VIRGINIA	3-80	2	A
5	ARIZONA ELECTRIC POWER COOP	APACHE NO 2	COCHISE ARIZONA	6-78	2	B
6	ARIZONA ELECTRIC POWER COOP	APACHE NO 3	COCHISE ARIZONA	6-79	2	B
7	ARIZONA PUBLIC SERVICE	CHOLLA NO 1	JOSEPH CITY ARIZONA	10-73	1	B
8	ARIZONA PUBLIC SERVICE	CHOLLA NO 2	JOSEPH CITY ARIZONA	6-77	2	B
9	ARIZONA PUBLIC SERVICE	FOUR CORNERS NO. 4	FARMINGTON NEW MEXICO	0- 0	6	B
10	ARIZONA PUBLIC SERVICE	FOUR CORNERS NO. 5A	FARMINGTON NEW MEXICO	2-76	1	B
11	ARIZONA PUBLIC SERVICE	FOUR CORNERS NO. 5B	FARMINGTON NEW MEXICO	0- 0	6	B
12	BASIN ELECTRIC POWER COOP	ANTELOPE VALLEY NO. 1	BEULAH NORTH DAKOTA	0-81	6	B
13	BASIN ELECTRIC POWER COOP	ANTELOPE VALLEY NO. 2	BEULAH NORTH DAKOTA	0-84	6	B
14	BASIN ELECTRIC POWER COOP	MISSOURI BASIN NO 1	WHEATLAND WYOMING	4-80	3	B
15	BASIN ELECTRIC POWER COOP	MISSOURI BASIN NO 2	WHEATLAND WYOMING	10-80	3	B
16	BASIN ELECTRIC POWER COOP	MISSOURI BASIN NO 3	WHEATLAND WYOMING	6-83	6	B
17	BIG RIVERS ELECTRIC COOP CORP.	REID STEAM STATION NO. 2	SEBREE KENTUCKY	12-79	2	A
18	BRAZOS ELECTRIC POWER COOP	ATACOSA MCMULLEN NO. 1	SAN MIGUEL TEXAS	12-79	3	E
19	CENTRAL ILLINOIS LIGHT CO.	DUCK CREEK NO. 1A	CANTON ILLINOIS	9-76	1	A
20	CENTRAL ILLINOIS LIGHT CO.	DUCK CREEK NO. 1B	CANTON ILLINOIS	8-78	2	A
21	CENTRAL ILLINOIS LIGHT CO.	DUCK CREEK NO.2	CANTON ILLINOIS	1-82	6	A
22	CENTRAL ILLINOIS PUBLIC SERV	NEWTON NO.1	NEWTON ILLINOIS	7-78	2	A
23	CINCINNATI GAS & ELECTRIC CO.	EAST BEND NO 2	RABBIT HASH KENTUCKY	1-81	6	A
24	COLORADO UTE ELECTRICAL ASSN.	CRAIG STATION NO.1	CRAIG COLORADO	3-79	6	B
25	COLORADO UTE ELECTRICAL ASSN.	CRAIG STATION NO.2	CRAIG COLORADO	3-79	6	B
26	COLUMBUS & SOUTHERN OHIO ELEC.	CONESVILLE NO 5	CONESVILLE OHIO	2-77	2	B
27	COLUMBUS & SOUTHERN OHIO ELEC.	CONESVILLE NO 6	CONESVILLE OHIO	1-78	3	B
28	COLUMBUS & SOUTHERN OHIO ELEC.	POSTON NO. 5	ATHENS OHIO	0-81	6	B
29	COLUMBUS & SOUTHERN OHIO ELEC.	POSTON NO. 6	ATHENS OHIO	0-83	6	B
30	COMMONWEALTH EDISON	POWERTON NO. 51	PEKIN ILLINOIS	12-79	3	C
31	COMMONWEALTH EDISON	WILL COUNTY NO 1	ROMEOVILLE ILLINOIS	2-72	1	C
32	DETROIT EDISON	ST. CLAIR NO 6	BELLE RIVER MICHIGAN	5-76	1	C
33	DUQUESNE LIGHT	ELRAMA POWER STATION	ELRAMA PENNSYLVANIA	10-75	1	B
34	DUQUESNE LIGHT	PHILLIPS POWER STATION	SOUTH HEIGHT PENNSYLVANIA	7-73	1	B
35	EASTERN KENTUCKY POWER COOP	SPURLOCK GENERATING PLANT NO.2	MAYSVILLE KENTUCKY	3-80	6	A

1. OPERATIONAL UNITS
2. UNITS UNDER CONSTRUCTION
3. PLANNED - CONTRACT AWARDED
4. PLANNED - LETTER OF INTENT SIGNED
5. PLANNED - REQUESTING/EVALUATING BIDS
6. CONSIDERING ONLY FGD SYSTEMS

A. BOILER CONSTRUCTED SUBJECT TO FEDERAL NSPS
B. BOILER SUBJECT TO STATE STANDARD THAT IS MORE STRINGENT THAN THE FEDERAL NSPS
C. BOILER SUBJECT TO STATE STANDARD THAT IS EQUAL TO OR LESS STRINGENT THAN NSPS
D. OTHER
E. REGULATORY CLASS UNKNOWN

TABLE 1
SUMMARY LIST OF FGD SYSTEMS

FGD STATUS REPORT 12/76

I.D. NUMBER AND COMPANY NAME	UNIT NAME	LOCATION	START UP DATE	STATUS	REG CLASS
36 GENERAL MOTORS	CHEVROLET PARMA 1 2 3 & 4	PARMA OHIO	3-74	1	B
37 GULF POWER CO.	SCHOLZ NOS. 1B & 2B	CHATTAHOOCHEE FLORIDA	3-75	1	C
38 INDIANAPOLIS POWER & LIGHT CO.	PETERSBURG NO 3	PETERSBURG INDIANA	9-77	2	A
39 INDIANAPOLIS POWER & LIGHT CO.	PETERSBURG NO 4	PETERSBURG INDIANA	4-82	6	A
40 KANSAS CITY POWER & LIGHT	HAWTHORN NO 3	KANSAS CITY MISSOURI	11-72	1	B
41 KANSAS CITY POWER & LIGHT	HAWTHORN NO 4	KANSAS CITY MISSOURI	8-72	1	B
42 KANSAS CITY POWER & LIGHT	LA CYGNE NO 1	LA CYGNE KANSAS	2-73	1	C
43 KANSAS POWER & LIGHT	JEFFERY NO. 1	ST MARY KANSAS	6-78	2	B
44 KANSAS POWER & LIGHT	JEFFERY NO. 2	ST MARY KANSAS	6-79	2	B
45 KANSAS POWER & LIGHT	LAWRENCE NO 4	LAWRENCE KANSAS	12-68	1	D
46 KANSAS POWER & LIGHT	LAWRENCE NO 5	LAWRENCE KANSAS	11-71	1	D
47 KENTUCKY UTILITIES	GREEN RIVER UNITS 1 AND 2	CENTRAL CITY KENTUCKY	9-75	1	C
48 KEY WEST UTILITY BOARD	STOCK ISLAND PLANT	KEY WEST FLORIDA	10-72	1	C
49 LOUISVILLE GAS & ELECTRIC	CANE RUN NO 4	LOUISVILLE KENTUCKY	8-76	1	C
50 LOUISVILLE GAS & ELECTRIC	CANE RUN NO 5	LOUISVILLE KENTUCKY	12-77	2	C
51 LOUISVILLE GAS & ELECTRIC	CANE RUN NO 6	LOUISVILLE KENTUCKY	2-79	3	C
52 LOUISVILLE GAS & ELECTRIC	MILL CREEK NO 1	LOUISVILLE KENTUCKY	1-82	6	C
53 LOUISVILLE GAS & ELECTRIC	MILL CREEK NO 2	LOUISVILLE KENTUCKY	1-81	6	C
54 LOUISVILLE GAS & ELECTRIC	MILL CREEK NO 3	LOUISVILLE KENTUCKY	7-77	2	A
55 LOUISVILLE GAS & ELECTRIC	MILL CREEK NO 4	LOUISVILLE KENTUCKY	7-79	3	A
56 LOUISVILLE GAS & ELECTRIC	PADDYS RUN NO 6	LOUISVILLE KENTUCKY	4-73	1	C
57 MINNESOTA POWER AND LIGHT CO.	CLAY BOSWELL STATION NO.4	COHASSET MINNESOTA	0-80	5	A
58 MINNKOTA POWER COOPERATIVE	MILTON R. YOUNG NO. 2	CENTER NORTH DAKOTA	8-77	2	B
59 MONTANA POWER CO.	COLSTRIP NO 1	COLSTRIP MONTANA	10-75	1	C
60 MONTANA POWER CO.	COLSTRIP NO 2	COLSTRIP MONTANA	7-76	1	A
61 MONTANA POWER CO.	COLSTRIP NO.3	COLSTRIP MONTANA	7-80	3	A
62 MONTANA POWER CO.	COLSTRIP NO.4	COLSTRIP MONTANA	7-81	3	A
63 NEVADA POWER	HARRY ALLEN STATION NO. 1	N. E. LAS VEGAS	6-83	6	B
64 NEVADA POWER	HARRY ALLEN STATION NO. 2	N. E. LAS VEGAS	6-84	6	B
65 NEVADA POWER	HARRY ALLEN STATION NO. 3	N. E. LAS VEGAS	6-85	6	B
66 NEVADA POWER	HARRY ALLEN STATION NO. 4	N. E. LAS VEGAS	6-86	6	B
67 NEVADA POWER	REID GARDNER NO 1	MOAPA NEVADA	4-74	1	B
68 NEVADA POWER	REID GARDNER NO 2	MOAPA NEVADA	4-74	1	B
69 NEVADA POWER	REID GARDNER NO 3	MOAPA NEVADA	7-76	1	B
70 NEVADA POWER	REID GARDNER NO 4	MOAPA NEVADA	0- 0	4	B

1. OPERATIONAL UNITS
2. UNITS UNDER CONSTRUCTION
3. PLANNED - CONTRACT AWARDED
4. PLANNED - LETTER OF INTENT SIGNED
5. PLANNED - REQUESTING/EVALUATING BIDS
6. CONSIDERING ONLY FGD SYSTEMS

A. BOILER CONSTRUCTED SUBJECT TO FEDERAL NSPS
B. BOILER SUBJECT TO STATE STANDARD THAT IS MORE STRINGENT THAN THE FEDERAL NSPS
C. BOILER SUBJECT TO STATE STANDARD THAT IS EQUAL TO OR LESS STRINGENT THAN NSPS
D. OTHER
E. REGULATORY CLASS UNKNOWN

TABLE 1
SUMMARY LIST OF FGD SYSTEMS

FGD STATUS REPORT 12/76

I.D. NUMBER AND COMPANY NAME	UNIT NAME	LOCATION	START UP DATE	STATUS	REG CLASS
71 NEVADA POWER	WARNER VALLEY STATION NO. 1	ST. GEORGE UTAH	6-82	6	B
72 NEVADA POWER	WARNER VALLEY STATION NO. 2	ST. GEORGE UTAH	6-83	6	B
73 NEW ENGLAND ELEC SYSTEM	BRAYTON POINT NO.3	SOMERSET MASSACHUSETTS	0- 0	6	C
74 NIAGARA MOHAWK POWER COOP.	CHARLES R. HUNTLEY NO. 6	BUFFALO NEW YORK	6-78	6	C
75 NORTHERN INDIANA PUB SERVICE	BAILLY NO. 7	CHESTERTON INDIANA	0- 0	6	C
76 NORTHERN INDIANA PUB SERVICE	BAILLY NO. 8	CHESTERTON INDIANA	0- 0	6	C
77 NORTHERN INDIANA PUBLIC SERVIC	D.H. MITCHELL NO.11	GARY INDIANA	0-77	2	C
78 NORTHERN STATES POWER CO.	SHERBURNE COUNTY STATION NO.1	BECKER MINNESOTA	3-76	1	B
79 NORTHERN STATES POWER CO.	SHERBURNE COUNTY STATION NO.2	BECKER MINNESOTA	5-77	2	B
80 NORTHERN STATES POWER CO.	SHERBURNE COUNTY STATION NO.3	BECKER MINNESOTA	5-81	6	A
81 NORTHERN STATES POWER CO.	SHERBURNE COUNTY STATION NO.4	BECKER MINNESOTA	5-83	6	A
82 OTTER TAIL POWER COMPANY	COYOTE STATION NO.1	BEULAH NORTH DAKOTA	0-81	6	B
83 PACIFIC POWER AND LIGHT CO.	JIM BRIDGER NO. 4	ROCK SPRINGS WYOMING	9-79	3	B
84 PENNSYLVANIA POWER CO.	BRUCE MANSFIELD NO. 1	SHIPPINGPORT PENNSYLVANIA	4-76	1	B
85 PENNSYLVANIA POWER CO.	BRUCE MANSFIELD NO. 2	SHIPPINGPORT PENNSYLVANIA	4-77	2	B
86 PENNSYLVANIA POWER CO.	BRUCE MANSFIELD NO. 3	SHIPPINGPORT PENNSYLVANIA	4-79	3	B
87 PHILADELPHIA ELECTRIC CO.	CROMBY	PHOENIXVILLE PENNSYLVANIA	6-80	6	B
88 PHILADELPHIA ELECTRIC CO.	EDDYSTONE NO 1A	EDDYSTONE PENNSYLVANIA	9-75	1	B
89 PHILADELPHIA ELECTRIC CO.	EDDYSTONE NO 1B	EDDYSTONE PENNSYLVANIA	6-80	4	B
90 PHILADELPHIA ELECTRIC CO.	EDDYSTONE NO. 2	EDDYSTONE PENNSYLVANIA	6-80	6	B
91 POTOMAC ELECTRIC & POWER	DICKERSON NO.1	DICKERSON MARYLAND	0-78	6	C
92 POTOMAC ELECTRIC & POWER	DICKERSON NO.2	DICKERSON MARYLAND	0-78	6	C
93 PUBLIC SERVICE CO OF COLORADO	VALMONT NO. 5	VALMONT COLORADO	10-74	1	E
94 PUBLIC SERVICE CO OF NEW MEX.	SAN JUAN NO. 1	WATERFLOW NEW MEXICO	7-77	2	B
95 PUBLIC SERVICE CO OF NEW MEX.	SAN JUAN NO. 2	WATERFLOW NEW MEXICO	7-77	2	B
96 PUBLIC SERVICE CO OF NEW MEX.	SAN JUAN NO. 3	WATERFLOW NEW MEXICO	5-81	6	B
97 PUBLIC SERVICE CO OF NEW MEX.	SAN JUAN NO. 4	WATERFLOW NEW MEXICO	5-81	6	B
98 PUBLIC SERVICE OF INDIANA	GIBSON NO. 3	GIBSON COUNTY INDIANA	0-78	5	A
99 PUBLIC SERVICE OF INDIANA	GIBSON NO. 4	GIBSON COUNTY INDIANA	0-79	5	A
100 RICKENBACKER AFB	RICKENBACKER	COLUMBUS OHIO	3-76	1	E
101 SALT RIVER PROJECT	CORONADO NO.1	ST. JOHNS ARIZONA	4-79	3	B
102 SALT RIVER PROJECT	CORONADO NO.2	ST. JOHNS ARIZONA	4-80	3	B
103 SALT RIVER PROJECT	CORONADO NO.3	ST. JOHNS ARIZONA	0-87	6	B
104 SOUTH CAROLINA PUBLIC SERVICE	WINYAH NO. 2	GEORGETOWN SOUTH CAROLINA	5-77	2	A
105 SOUTHERN CALIFORNIA EDISON	MOHAVE NO 1B	LAUGHLIN NEVADA	6-77	6	E

1. OPERATIONAL UNITS
2. UNITS UNDER CONSTRUCTION
3. PLANNED - CONTRACT AWARDED
4. PLANNED - LETTER OF INTENT SIGNED
5. PLANNED - REQUESTING/EVALUATING BIDS
6. CONSIDERING ONLY FGD SYSTEMS

A. BOILER CONSTRUCTED SUBJECT TO FEDERAL NSPS
B. BOILER SUBJECT TO STATE STANDARD THAT IS MORE STRINGENT THAN THE FEDERAL NSPS
C. BOILER SUBJECT TO STATE STANDARD THAT IS EQUAL TO OR LESS STRINGENT THAN NSPS
D. OTHER
E. REGULATORY CLASS UNKNOWN

TABLE 1
SUMMARY LIST OF FGD SYSTEMS

FGD STATUS REPORT 12/76

I.D. NUMBER AND COMPANY NAME	UNIT NAME	LOCATION	START UP DATE	STATUS	REG CLASS
106 SOUTHERN CALIFORNIA EDISON	MOHAVE NO. 2	LAUGHLIN NEVADA	6-77	6	E
107 SOUTHERN ILLINOIS POWER COOP	SOUTHERN ILLINOIS POWER PT. 4	MARION ILLINOIS	1-78	3	A
108 SOUTHERN INDIANA GAS&ELECTRIC	A.B. BROWN NO.1	WEST FRANKLIN INDIANA	4-79	3	A
109 SOUTHERN MISSISSIPPI ELECTRIC	R.D. MORROW NO.1	HATTIESBURG MISSISSIPPI	11-77	2	A
110 SOUTHERN MISSISSIPPI ELECTRIC	R.D. MORROW NO.2	HATTIESBURG MISSISSIPPI	6-78	2	A
111 SPRINGFIELD CITY UTILITIES	SOUTHWEST NO. 1	SPRINGFIELD MISSOURI	2-77	2	A
112 TENNESSEE VALLEY AUTHORITY	SHAWNEE NO.10A	PADUCAH KENTUCKY	4-72	1	C
113 TENNESSEE VALLEY AUTHORITY	SHAWNEE NO.10B	PADUCAH KENTUCKY	4-72	1	C
114 TENNESSEE VALLEY AUTHORITY	WIDOWS CREEK NO 8	BRIDGEPORT ALABAMA	3-77	2	C
115 TEXAS UTILITIES CO.	MARTIN LAKE NO. 1	TATUM TEXAS	1-77	2	A
116 TEXAS UTILITIES CO.	MARTIN LAKE NO. 2	TATUM TEXAS	10-77	2	A
117 TEXAS UTILITIES CO.	MARTIN LAKE NO. 3	TATUM TEXAS	12-78	3	A
118 TEXAS UTILITIES CO.	MARTIN LAKE NO. 4	TATUM TEXAS	12-79	3	A
119 TEXAS UTILITIES CO.	MONTICELLO NO.3	MT. PLEASANT TEXAS	10-77	2	A
120 UNITED POWER ASSOCIATION	COAL CREEK NO. 1	UNDERWOOD NORTH DAKOTA	11-78	3	A
121 UNITED POWER ASSOCIATION	COAL CREEK NO. 2	UNDERWOOD NORTH DAKOTA	11-79	3	A
122 UTAH POWER & LIGHT CO.	EMERY NO.1	EMERY COUNTY UTAH	6-78	3	A
123 UTAH POWER & LIGHT CO.	HUNTINGTON NO.1	PRICE UTAH	6-77	2	A
124 WISCONSIN POWER & LIGHT CO.	COLUMBIA NO. 2	PORTAGE WISCONSIN	1-80	5	A

1. OPERATIONAL UNITS
2. UNITS UNDER CONSTRUCTION
3. PLANNED - CONTRACT AWARDED
4. PLANNED - LETTER OF INTENT SIGNED
5. PLANNED - REQUESTING/EVALUATING BIDS
6. CONSIDERING ONLY FGD SYSTEMS

A. BOILER CONSTRUCTED SUBJECT TO FEDERAL NSPS
B. BOILER SUBJECT TO STATE STANDARD THAT IS MORE STRINGENT THAN THE FEDERAL NSPS
C. BOILER SUBJECT TO STATE STANDARD THAT IS EQUAL TO OR LESS STRINGENT THAN NSPS
D. OTHER
E. REGULATORY CLASS UNKNOWN

TABLE 2

STATUS OF FGD SYSTEMS

TABLE 2
STATUS OF FGD SYSTEMS DURING 12/76

COMPANY POWER STATION	CURRENT MONTH
I.D. NUMBER 1 ALABAMA ELECTRIC COOP TOMBIGBEE NO. 2 225 MW - NEW COAL 0.8- 1.5 PERCENT SULFUR PEABODY ENGINEERING LIMESTONE SCRUBBING STARTUP 3/78	PEABODY ENGINEERING HAS BEEN AWARDED THE CONTRACT FOR THE INSTALLATION OF A LIMESTONE SCRUBBING SYSTEM ON THIS UNIT. A HIGH-EFFICIENCY ESP WILL BE INSTALLED UPSTREAM OF THE SCRUBBING SYSTEM TO PROVIDE PRIMARY PARTICULATE CONTROL. THE FGD SYSTEM CONTAINS TWO SCRUBBING TRAINS, TREATING APPROXIMATELY 70 PERCENT OF THE FLUE GAS FOR REMOVAL OF SULFUR DIOXIDE. STACK GAS REHEAT WILL NOT BE REQUIRED. DURING THE REPORT PERIOD, WORK ON THE CONSTRUCTION OF THIS UNIT CONTINUED. SITE PREPARATION AND FOUNDATION WORK HAVE BEEN COMPLETED.EQUIPMENT ERECTION IS PROCEEDING.
I.D. NUMBER 2 ALABAMA ELECTRIC COOP TOMBIGBEE NO. 3 225 MW - NEW COAL 0.8- 1.5 PERCENT SULFUR PEABODY ENGINEERING LIMESTONE SCRUBBING STARTUP 3/79	PEABODY ENGINEERING HAS BEEN AWARDED THE CONTRACT FOR THE INSTALLATION OF A LIMESTONE SCRUBBING SYSTEM ON THIS UNIT. A HIGH-EFFICIENCY ESP WILL BE INSTALLED UPSTREAM OF THE SCRUBBING SYSTEM TO PROVIDE PRIMARY PARTICULATE CONTROL. THE FGD SYSTEM CONTAINS TWO SCRUBBING TRAINS, TREATING APPROXIMATELY 70 PERCENT OF THE FLUE GAS FOR REMOVAL OF SULFUR DIOXIDE. STACK GAS REHEAT WILL NOT BE REQUIRED. DURING THE REPORT PERIOD, WORK ON THE CONSTRUCTION OF THIS UNIT CONTINUED. SITE PREPARATION AND FOUNDATION WORK HAVE BEEN COMPLETED. EQUIPMENT ERECTION IS PROCEEDING.
I.D. NUMBER 3 ALLEGHENY POWER SYSTEM PLEASANTS NO. 1 625 MW - NEW COAL 4.5 PERCENT SULFUR (MAX) BABCOCK AND WILCOX LIME SCRUBBING STARTUP 3/79	THE THREE PRINCIPAL OPERATING UTILITY COMPANIES OF THE ALLEGHENY POWER SYSTEM ARE INSTALLING AN EMISSION CONTROL SYSTEM FOR THIS NEW COAL-FIRED UNIT WHICH INCLUDES A HIGH EFFICIENCY ESP UPSTREAM OF FOUR SPRAY TOWERS FOR THE CONTROL OF PARTICULATES AND SULFUR DIOXIDE. DESIGN REMOVAL EFFICIENCIES FOR THIS EMISSION CONTROL SYSTEM ARE 99.5 AND 90 PERCENT RESPECTIVELY. THE DRAVO CO. IS SUPPLYING THIOSORBIC LIME. THE CONSULTING ENGINEERING FIRM IS UNITED ENGINEERS AND CONSTRUCTORS. SLUDGE DISPOSAL PLANS ARE NOW BEING EVALUATED AND FINALIZED.
I.D. NUMBER 4 ALLEGHENY POWER SYSTEM PLEASANTS NO. 2 625 MW - NEW COAL 4.5 PERCENT SULFUR (MAX) BABCOCK AND WILCOX LIME SCRUBBING STARTUP 3/80	THE THREE PRINCIPAL OPERATING UTILITY COMPANIES OF THE ALLEGHENY POWER SYSTEM ARE INSTALLING AN EMISSION CONTROL SYSTEM FOR THIS NEW COAL-FIRED UNIT WHICH INCLUDES A HIGH EFFICIENCY ESP UPSTREAM OF FOUR SPRAY TOWERS FOR THE CONTROL OF PARTICULATES AND SULFUR DIOXIDE. DESIGN REMOVAL EFFICIENCIES FOR THIS EMISSION CONTROL SYSTEM ARE 99.5 AND 90 PERCENT, RESPECTIVELY. THE DRAVO CO. IS SUPPLYING THIOSORBIC LIME. THE CONSULTING ENGINEERING FIRM IS UNITED ENGINEERS AND CONSTRUCTORS. SLUDGE DISPOSAL PLANS ARE NOW BEING EVALUATED AND FINALIZED.
I.D. NUMBER 5 ARIZONA ELECTRIC POWER COOP APACHE NO 2 200 MW - NEW COAL 0.5- 0.8 PERCENT SULFUR RESEARCH COTTRELL LIMESTONE SCRUBBING STARTUP 6/78	THE CONTRACT FOR THE INSTALLATION OF A WET LIMESTONE SCRUBBING SYSTEM HAS BEEN AWARDED BY THE UTILITY TO RESEARCH-COTTRELL. CONSTRUCTION OF THE SYSTEM IS NOW IN PROGRESS. SITE PREPARATION AND FOUNDATION WORK IS NEARING COMPLETION. THE CONCRETE FOR THE SCRUBBING TOWER HAS ALREADY BEEN POURED. THE EMISSION CONTROL SYSTEM WILL CONSIST OF A HIGH-EFFICIENCY ESP INSTALLED UPSTREAM OF TWO PACKED TOWERS. GUARANTEED SO2 AND PARTICULATE REMOVAL EFFICIENCIES ARE 85 AND 99.4 PERCENT, RESPECTIVELY. THE A-E DESIGN FIRM IS BURNS & MCDONNELL.

TABLE 2
STATUS OF FGD SYSTEMS DURING 12/76

COMPANY POWER STATION	CURRENT MONTH
I.D. NUMBER 6 ARIZONA ELECTRIC POWER COOP APACHE NO 3 200 MW - NEW COAL 0.5- 0.8 PERCENT SULFUR RESEARCH COTTRELL LIMESTONE SCRUBBING STARTUP 6/79	THE CONTRACT FOR THE INSTALLATION OF A WET LIMESTONE SCRUBBING SYSTEM HAS BEEN AWARDED BY THE UTILITY TO RESEARCH-COTTRELL. CONSTRUCTION OF THE SYSTEM IS NOW IN PROGRESS. SITE PREPARATION AND FOUNDATION WORK IS NEARING COMPLETION. THE CONCRETE FOR THE SCRUBBING TOWER HAS ALREADY BEEN POURED. THE EMISSION CONTROL SYSTEM WILL CONSIST OF A HIGH-EFFICIENCY ESP INSTALLED UPSTREAM OF TWO PACKED TOWERS, GUARANTEED SO2 AND PARTICULATE REMOVAL EFFICIENCIES ARE 85 AND 99.4 PERCENT, RESPECTIVELY. THE A-E FIRM IS BURNS & MCDONNELL.
I.D. NUMBER 7 ARIZONA PUBLIC SERVICE CHOLLA NO 1 115 MW - RETROFIT COAL 0.44-1 PERCENT SULFUR RESEARCH COTTRELL LIMESTONE SCRUBBING STARTUP 10/73	REFER TO THE BACKGROUND INFORMATION SECTION IN TABLE 3 OF THIS REPORT. THE FGD SYSTEM CONTAINS TWO SCRUBBING TRAINS FOR THE REMOVAL OF SULFUR DIOXIDE AND PARTICULATES. THE SCRUBBERS HAVE BEEN IN SERVICE SINCE NOV. 1973. THE AVERAGE RELIABILITY INDEX VALVES FOR THE SCRUBBING SYSTEM DURING THE MONTHS OF NOVEMBER AND DECEMBER WERE 97 AND 100 PERCENT, RESPECTIVELY. THE ANNUAL SYSTEM RELIABILITY INDEX FOR THE CHOLLA NO. 1 SCRUBBING UNIT AVERAGED APPROXIMATELY 89 PERCENT FOR 1976 OPERATIONS.
I.D. NUMBER 8 ARIZONA PUBLIC SERVICE CHOLLA NO 2 250 MW - NEW COAL 0.44-1 PERCENT SULFUR RESEARCH COTTRELL LIMESTONE SCRUBBING STARTUP 6/77	THE CONTRACT FOR THIS WET LIMESTONE SCRUBBING SYSTEM HAS BEEN AWARDED BY THE UTILITY TO RESEARCH-COTTRELL. THIS SYSTEM IS A LARGER-SCALE APPLICATION OF THE CHOLLA NO.1 DESIGN. ALL DESIGN AND ENGINEERING WORK HAS BEEN COMPLETED. THE CONSTRUCTION OF THIS NEW UNIT IS NEARING COMPLETION. START-UP IS NOW SCHEDULED FOR JUNE 1977.
I.D. NUMBER 9 ARIZONA PUBLIC SERVICE FOUR CORNERS NO. 4 755 MW - RETROFIT COAL 0.7 - 0.75% SULFUR (AVG) NOT SELECTED NOT SELECTED STARTUP 0/ 0	THE DECISION TO CONTROL THE EMISSIONS FROM THIS COAL-FIRED 755-MW UNIT WILL BE MADE PENDING THE COMPLETION OF TESTS NOW BEING CONDUCTED ON THE PROTOTYPE 160-MW HORIZONTAL SCRUBBING MODULE OPERATING ON UNIT NO.5 AT THE FOUR CORNERS PLANT.
I.D. NUMBER 10 ARIZONA PUBLIC SERVICE FOUR CORNERS NO. 5A 160 MW - RETROFIT COAL 0.7 PERCENT SULFUR SO. CALIFORNIA EDISON LIME SCRUBBING STARTUP 2/76	REFER TO THE BACKGROUND INFORMATION SECTION IN TABLE 3 OF THIS REPORT. PENDING THE OUTCOME OF TESTS WHICH HAVE JUST BEEN COMPLETED ON THE MOVED FROM THE MOHAVE TEST SITE AND REASSEMBLED AT THE FOUR CORNERS STATION OF ARIZONA PUBLIC SERVICE. THE EXPERIMENTAL MODULE IS DESIGNED TO TREAT APPROXIMATELY 20 PERCENT OF THE FLUE GAS FLOW FROM UNIT NO. 5 WHICH HAS A NET GENERATING CAPACITY OF 755-MW. THE SO2 TEST PROGRAM COMMENCED FEB. 1976 AND WAS COMPLETED ON DEC. 6, 1976. UPON CONCLUSION OF THE PROGRAM, THE MODULE WAS DISASSEMBLED. RESULTS WILL BE PUBLISHED

TABLE 2
STATUS OF FGD SYSTEMS DURING 12/76

COMPANY POWER STATION	CURRENT MONTH
I.D. NUMBER 11 ARIZONA PUBLIC SERVICE FOUR CORNERS NO. 5B 595 MW - RETROFIT COAL 0.7 - 0.75% SULFUR (AVG) NOT SELECTED NOT SELECTED STARTUP 0/ 0	THE BALANCE OF FLUE GAS FROM THE 755-MW NO.5 UNIT WILL BE CONTROLLED PENDING THE OUTCOME OF TESTS CURRENTLY BEING CONDUCTED ON THE PROTOTYPE PROTOTYPE WEIR HORIZONTAL SCRUBBING MODULE INSTALLED ON THIS UNIT. TEST RESULTS ON THE PROTOTYPE'S PERFORMANCE WILL BE PUBLISHED IN FEBRUARY 1977. A DECISION CONCERNING SULFUR DIOXIDE CONTROLS FOR THIS UNIT HAS NOT YET BEEN FINALIZED.
I.D. NUMBER 12 BASIN ELECTRIC POWER COOP ANTELOPE VALLEY NO. 1 450 MW - NEW LIGNITE 1.0 PERCENT SULFUR NOT SELECTED NOT SELECTED STARTUP 0/81	THE UTILITY IS CURRENTLY INVESTIGATING VARIOUS FGD PROCESSES FOR TWO COAL-FIRED UNITS AT THIS NEW STATION WHICH WILL BE LOCATED IN MERCER COUNTY, NEAR BEULAH, NORTH DAKOTA. THIS NEW FACILITY WILL BE KNOWN AS THE ANTELOPE VALLEY STATION AND WILL BE REQUIRED TO COMPLY WITH AIR EMISSION STANDARDS VIA THE BEST AVAILABLE TECHNOLOGY. START-UP IS NOW SCHEDULED FOR 1981.
I.D. NUMBER 13 BASIN ELECTRIC POWER COOP ANTELOPE VALLEY NO. 2 450 MW - NEW LIGNITE 1.0 PERCENT SULFUR NOT SELECTED NOT SELECTED STARTUP 0/84	THE UTILITY IS CURRENTLY INVESTIGATING VARIOUS FGD PROCESSES FOR TWO COAL-FIRED UNITS AT THIS NEW STATION WHICH WILL BE LOCATED IN MERCER COUNTY,NEAR BEULAH,NORTH DAKOTA. THIS NEW FACILITY WILL BE KNOWN AS THE ANTELOPE VALLEY STATION AND WILL BE REQUIRED TO COMPLY WITH AIR EMISSION STANDARDS VIA THE BEST AVAILABLE TECHNOLOGY. START-UP IS NOW SCHEDULED FOR 1984.
I.D. NUMBER 14 BASIN ELECTRIC POWER COOP MISSOURI BASIN NO 1 550 MW - NEW LIGNITE 0.8 PERCENT SULFUR RESEARCH COTTRELL LIMESTONE SCRUBBING STARTUP 4/80	BECAUSE OF THE STRICT STATE OF WYOMING EMISSION STANDARDS OF 0.2 LBS. OF SO2 PER MILLION BTU HEAT INPUT, LOW SULFUR COAL ALONE WILL NOT MEET STANDARDS. DURING THE REPORT PERIOD THE UTILITY AWARDED A CONTRACT TO RESEARCH COTTRELL FOR THE INSTALLATION OF A LIMESTONE SCRUBBING SYSTEM ON THIS UNIT. THE UNIT IS DESIGNED TO FIRE LIGNITE HAVING A HEAT CONTENT OF 8000 BTU/LB AND ASH AND SULFUR CONTENTS OF 7.0 AND 0.8 PERCENT, RESPECTIVELY. THE A-E DESIGN FIRM IS BURNS & MCDONNELL.
I.D. NUMBER 15 BASIN ELECTRIC POWER COOP MISSOURI BASIN NO 2 550 MW - NEW COAL RESEARCH COTTRELL LIMESTONE SCRUBBING STARTUP 10/80	BECAUSE OF THE STRICT STATE OF WYOMING EMISSION STANDARDS OF 0.2 LBS. OF SO2 PER MILLION BTU HEAT INPUT, LOW SULFUR ALONE WILL NOT MEET STANDARDS. DURING THE REPORT PERIOD THE UTILITY AWARDED A CONTRACT TO RESEARCH COTTRELL FOR THE INSTALLATION OF A LIMESTONE SCRUBBING SYSTEM ON THIS UNIT. THE UNIT IS DESIGNED TO FIRE LIGNITE HAVING A HEAT CONTENT OF 8000 BTU/LB AND ASH AND SULFUR CONTENTS OF 7.0 AND 0.8 PERCENT, RESPECTIVELY. THE A-E DESIGN FIRM IS BURNS & MCDONNELL.

TABLE 2
STATUS OF FGD SYSTEMS DURING 12/76

COMPANY POWER STATION	CURRENT MONTH
I.D. NUMBER 16 BASIN ELECTRIC POWER COOP MISSOURI BASIN NO 3 550 MW - NEW COAL NOT SELECTED NOT SELECTED STARTUP 6/83	BECAUSE OF THE STRICT STATE OF WYOMING EMISSION STANDARDS OF 0.2 LBS. SO2 PER MILLION BTU HEAT INPUT, LOW SULFUR COAL ALONE WILL NOT MEET STANDARDS. THE UTILITY IS CURRENTLY INVESTIGATING VARIOUS FGD PROCESSES FOR THE NO.3 UNIT AT THE MISSOURI BASIN STATION.
I.D. NUMBER 17 BIG RIVERS ELECTRIC COOP CORP. REID STEAM STATION NO. 2 250 MW - NEW COAL 3.5-4.0 PERCENT SULFUR AMERICAN AIR FILTER LIME SCRUBBING STARTUP 12/79	THE UTILITY HAS AWARDED A CONTRACT TO THE AMERICAN AIR FILTER COMPANY FOR THE INSTALLATION OF AN EMISSION CONTROL SYSTEM ON THIS NEW COAL-FIRED UNIT LOCATED IN SEBREE, KENTUCKY. AAF WILL DESIGN,FABRICATE AND INSTALL AN ESP AND TWO SPRAY TOWERS FOR THE CONTROL OF PARTICULATES AND SULFUR DIOXIDE.DESIGN REMOVAL EFFICIENCIES ARE 99.6 AND 90 PERCENT RESPECTIVELY. THE BOILER, WHICH IS CURRENTLY UNDER CONSTRUCTION, WILL FIRE HIGH SULFUR WESTERN KENTUCKY COAL (3.5 TO 4.5 PERCENT) AND COMPLY WITH NEW SOURCE PERFORMANCE STANDARDS.CONSTRUCTION OF THE CONTROL SYSTEM IS NOW UNDERWAY.
I.D. NUMBER 18 BRAZOS ELECTRIC POWER COOP ATACOSA MCMULLEN NO. 1 400 MW - NEW LIGNITE 1.67 PERCENT SULFUR BABCOCK & WILCOX LIMESTONE SCRUBBING STARTUP 12/79	BABCOCK AND WILCOX HAS BEEN AWARDED THE CONTRACT FOR THE INSTALLATION OF THIS ENTIRE NEW SYSTEM. THE EMISSION CONTROL EQUIPMENT FOR THE COAL-FIRED RADIANT BOILER WILL CONSIST OF ELECTROSTATIC PRECIPITATORS UPSTREAM OF THE LIMESTONE SCRUBBING MODULES. THE SCRUBBER FLUE GAS CAPACITY IS NOMINALLY DESIGNED TO EXCEED 1.5 MILLION ACFM. THE DESIGN SO2 REMOVAL EFFICIENCY IS 86 PERCENT FOR 4400 PPM SO2 INLET. LIGNITE COAL WILL BE FIRED IN THE BOILER. THE SCRUBBING WASTES WILL BE DISPOSED IN AN OFF-SITE MINEFILL. THE CONSULTING A-E FIRM IS TIPPETT AND GEE.
I.D. NUMBER 19 CENTRAL ILLINOIS LIGHT CO. DUCK CREEK NO. 1A 100 MW - NEW COAL 2.5 - 3.0 PERCENT SULFUR RILEY STOKER / ENVIRONEERING LIMESTONE SCRUBBING STARTUP 9/76	THE INSTALLATION OF THIS SINGLE 100-MW SCRUBBER MODULE WAS COMPLETED IN JULY AND START-UP OPERATIONS FOLLOWED. DEBUGGING OPERATIONS HAVE BEEN PROCEEDING ON AN INTERMITTENT BASIS BECAUSE OF CONSTRUCTION-RELATED PROBLEMS. THE SYSTEM WAS SHUTDOWN FOR A SHORT PERIOD OF TIME TO CORRECT THESE PROBLEMS. RE-START COMMENCED ON SEPTEMBER 9. OPERATION OF THE MODULE DURING THE PERIOD FOLLOWING START-UP HAS BEEN INTERMITTENT BECAUSE OF MECHANICAL AND CHEMICAL-RELATED PROBLEMS. THIS HAS PROMPTED THE UTILITY TO SHUTDOWN THE MODULE UNTIL FULL-SCALE START-UP DATE OF 8/78.
I.D. NUMBER 20 CENTRAL ILLINOIS LIGHT CO. DUCK CREEK NO. 1B 300 MW - NEW COAL 2.5 - 3.0 PERCENT SULFUR RILEY STOKER / ENVIRONEERING LIMESTONE SCRUBBING STARTUP 8/78	A CONTRACT HAS BEEN AWARDED BY THE UTILITY TO THE RILEY STOKER CORP. FOR THE DESIGN, FABRICATION AND INSTALLATION OF THREE ADDITIONAL SCRUBBER MODULES FOR THE BALANCE OF THIS UNIT. THE THREE MODULES WILL COMPLETE A FOUR MODULE SULFUR DIOXIDE SCRUBBING SYSTEM, THE FIRST OF WHICH WAS PLACED IN SERVICE ON SEPTEMBER 9,1976. THE EMISSION CONTROL SYSTEM FOR THIS UNIT WILL CONSIST OF A HIGH-EFFICIENCY ESP UPSTREAM OF FOUR VENTRI-SORBER SCRUBBER MODULES. DESIGN PARTICULATE AND SULFUR DIOXIDE REMOVAL EFFICIENCIES ARE 99.8 AND 75 PERCENT,RESPECTIVELY.

TABLE 2
STATUS OF FGD SYSTEMS DURING 12/76

COMPANY POWER STATION	CURRENT MONTH
I.D. NUMBER 21 CENTRAL ILLINOIS LIGHT CO. DUCK CREEK NO.2 400 MW - NEW COAL 2.5-3.0 PERCENT SULFUR NOT SELECTED LIMESTONE SCRUBBING STARTUP 1/82	THE PROPOSED LIMESTONE SCRUBBING SYSTEM FOR THIS NEW COAL-FIRED UNIT IS SCHEDULED TO COMMENCE OPERATIONS IN JANUARY 1982. THE UTILITY HAS NOT YET SELECTED A SYSTEM SUPPLIER. A DECISION CONCERNING THE STATUS OF THE BOILER AND CONTROL STRATEGY WILL BE ANNOUNCED IN LATE 1977.
I.D. NUMBER 22 CENTRAL ILLINOIS PUBLIC SERV NEWTON NO.1 575 MW - NEW COAL 2.8-3.2 PERCENT SULFUR BUELL/ENVIROTECH DOUBLE ALKALI SCRUBBING STARTUP 7/78	A CONTRACT HAS BEEN AWARDED BY CIPSCO TO BUELL/ENVIROTECH FOR THE INSTALLATION OF AN EMISSION CONTROL SYSTEM ON UNIT NO.1, A COAL-FIRED 575-MW POWER BOILER LOCATED IN NEWTON,ILLINOIS. THE KEY COMPONENTS OF THE EMISSION CONTROL SYSTEM INCLUDE* A HIGH-EFFICIENCY ESP, FOUR SCRUBBER-ABSORBER TRAINS, THREE THICKENERS, TWO EXPERIMENTAL REHEAT SYSTEMS, AND THREE HORIZONTAL EXTRACTION FILTERS FOR SLUDGE DEWATERING. DESIGN PLANS CALL FOR COMPLETE WATER RECOVERY WITH ZERO EFFLUENT DISCHARGE. DESIGN PARTICULATE AND SO2 REMOVAL EFFICIENCIES ARE 99.5 AND 95 %,RESPECTIVELY.
I.D. NUMBER 23 CINCINNATI GAS & ELECTRIC CO. EAST BEND NO 2 600 MW - NEW COAL NOT SELECTED NOT SELECTED STARTUP 1/81	BID REQUEST AND EVALUATION IS SCHEDULED TO COMMENCE SHORTLY. CONSTRUCTION AND OPERATING PERMITS ARE BEING PROCURED. A COAL SOURCE AND SUPPLY HAS NOT BEEN FINALIZED. COMMERCIAL START-UP DATE HAS BEEN DELAYED ONE YEAR TO JANUARY 1981. THE A-E DESIGN FIRM IS SARGENT AND LUNDY.
I.D. NUMBER 24 COLORADO UTE ELECTRICAL ASSN. CRAIG STATION NO.1 450 MW - NEW COAL 0.45 PERCENT SULFUR NOT SELECTED LIME/LIMESTONE SCRUBBING STARTUP 3/79	THIS NEW STATION IS A MINE MOUTH FACILITY CONTAINING TWO COAL-FIRED POWER GENERATING UNITS. THESE UNITS WILL FIRE COLORADO LOW-SULFUR SUB-BITUMINOUS COAL HAVING A HEAT CONTENT OF 9100 TO 10300 BTU/LB AND ASH AND SULFUR CONTENTS OF 10 TO 12 PERCENT AND 0.45 PERCENT, RESPECTIVELY. THE UTILITY IS NOW INVESTIGATING VARIOUS CONTROL STRATEGIES WHICH WILL PROBABLY INCLUDE HOT-SIDE ESP'S UPSTREAM OF WET CALCIUM-BASED SCRUBBERS. REQUIRED PARTICULATE AND SULFUR DIOXIDE REMOVAL EFFICIENCIES ARE 99.8 AND 85 PERCENT, RESPECTIVELY. FGD START-UP IS SCHEDULED FOR SPRING 1979.
I.D. NUMBER 25 COLORADO UTE ELECTRICAL ASSN. CRAIG STATION NO.2 450 MW - NEW COAL 0.45 PERCENT SULFUR NOT SELECTED LIME/LIMESTONE SCRUBBING STARTUP 3/79	THIS NEW STATION IS A MINE MOUTH FACILITY CONTAINING TWO COAL-FIRED POWER GENERATING UNITS. THESE UNITS WILL FIRE COLORADO LOW-SULFUR SUB-BITUMINOUS COAL HAVING A HEAT CONTENT OF 9100 TO 10300 BTU/LB AND ASH AND SULFUR CONTENTS OF 10 TO 12 PERCENT AND 0.45 PERCENT, RESPECTIVELY. THE UTILITY IS NOW INVESTIGATING VARIOUS CONTROL STRATEGIES WHICH WILL PROBABLY INCLUDE HOT-SIDE ESP'S UPSTREAM OF WET CALCIUM-BASED SCRUBBERS. REQUIRED PARTICULATE AND SULFUR DIOXIDE REMOVAL EFFICIENCIES ARE 99.8 AND 85 PERCENT, RESPECTIVELY. FGD START-UP IS SCHEDULED FOR SPRING 1979.

TABLE 2
STATUS OF FGD SYSTEMS DURING 12/76

COMPANY POWER STATION	CURRENT MONTH
I.D. NUMBER 26 COLUMBUS & SOUTHERN OHIO ELEC. CONESVILLE NO 5 400 MW - NEW COAL 4.5 - 4.9 PERCENT SULFUR UNIVERSAL OIL PRODUCTS LIME SCRUBBING STARTUP 2/77	THE CONSTRUCTION OF THE BOILER AND ESP HAVE BEEN COMPLETED. THE UNIT WAS PUT IN SERVICE IN SEPTEMBER AND HAS CONTINUED TO OPERATE WITH THE ESP IN THE FLUE GAS PATH. OPERATION OF THE A-SIDE SCRUBBING TRAIN HAS BEEN DELAYED BY A FIRE WHICH ORIGINATED INSIDE THE MODULE, RESULTING IN A PROJECTED MINIMUM DELAY PERIOD OF SIX MONTHS. THE UTILITY IS NOW CONDUCTING AIR AND WATER TESTS ON THE B-SIDE MODULE IN PREPARATION OF A FEBRUARY START-UP. THE DRAVO CORP. IS SUPPLYING THIOSORBIC LIME. THE MINE MOUTH PLANT FIRES A HIGH SULFUR, HIGH ASH OHIO BITUMINOUS COAL.
I.D. NUMBER 27 COLUMBUS & SOUTHERN OHIO ELEC. CONESVILLE NO 6 400 MW - NEW COAL 4.5 - 4.9 PERCENT SULFUR UNIVERSAL OIL PRODUCTS LIME SCRUBBING STARTUP 1/78	THE UTILITY SIGNED LONG-TERM CONTRACTS WITH DRAVO FOR THE PURCHASE OF THIOSORBIC LIME AND WITH IUCS FOR THE PURCHASE OF SLUDGE FIXATIVES. CONSTRUCTION ON THIS UNIT IS CURRENTLY SCHEDULED FOR 1977 WITH COMPLETION EXPECTED BY JANUARY 1978. SIMILAR TO CONESVILLE NO.5, THIS MINE MOUTH PLANT WILL BURN COAL WITH 17 PERCENT ASH CONTENT AND 4.5 TO 4.9 PERCENT SULFUR CONTENT. AN ELECTROSTATIC PRECIPITATOR WILL BE INSTALLED UPSTREAM OF THE FGD SYSTEM. THE A-E DESIGN FIRM IS BLACK AND VEATCH.
I.D. NUMBER 28 COLUMBUS & SOUTHERN OHIO ELEC. POSTON NO. 5 375 MW - NEW COAL 2.5 PERCENT SULFUR NOT SELECTED NOT SELECTED STARTUP 0/81	THIS UNIT WILL BURN HIGH SULFUR OHIO COAL (APPROXIMATELY 2.5 PERCENT SULFUR CONTENT). THE DESIGN OF THE EMISSION CONTROL STRATEGY HAS NOT YET BEEN FINALIZED.
I.D. NUMBER 29 COLUMBUS & SOUTHERN OHIO ELEC. POSTON NO. 6 375 MW - NEW COAL 2.5 PERCENT SULFUR NOT SELECTED NOT SELECTED STARTUP 0/83	THIS UNIT WILL BURN HIGH SULFUR COAL (APPROXIMATELY 2.5 PERCENT SULFUR CONTENT). THE DESIGN OF THE EMISSION CONTROL STRATEGY FOR THIS UNIT HAS NOT YET BEEN FINALIZED.
I.D. NUMBER 30 COMMONWEALTH EDISON POWERTON NO. 51 425 MW - RETROFIT COAL 3.6 PERCENT SULFUR UNIVERSAL OIL PRODUCTS LIMESTONE SCRUBBING STARTUP 12/79	THE CONTRACT FOR THIS FGD SYSTEM HAS BEEN AWARDED TO UNIVERSAL OIL PRODUCTS. THE PROCESS IS A CLOSED-LOOP WET LIMESTONE SCRUBBING SYSTEM WHICH WILL BE BACKFITTED TO BOILER 51, ONE OF TWO IDENTICAL BOILERS SUPPLYING STEAM TO AN 650 MW TURBINE-GENERATOR. THE FGD SYSTEM IS DESIGNED TO TREAT FLUE GAS RESULTING FROM THE COMBUSTION OF HIGH SULFUR COAL (3.6 PERCENT SULFUR* 8.3 PERCENT ASH* 17.3 PERCENT MOISTURE* 10,500 BTU/LB.) AND MEET SO2 EMISSION STANDARDS OF 1.8 LB. SO2/MM BTU. THE TOTAL INSTALLED CAPITAL COST OF THE FGD SYSTEM IS ESTIMATED AT $50MM.

TABLE 2
STATUS OF FGD SYSTEMS DURING 12/76

COMPANY POWER STATION	CURRENT MONTH
I.D. NUMBER 31 COMMONWEALTH EDISON WILL COUNTY NO 1 167 MW - RETROFIT COAL 4.0 PERCENT SULFUR BABCOCK & WILCOX LIMESTONE SCRUBBING STARTUP 2/72	REFER TO THE BACKGROUND INFORMATION SECTION IN TABLE 3 OF THIS REPORT. THIS FULL SCALE DEMONSTRATION SCRUBBING SYSTEM HAS BEEN IN SERVICE SINCE FEBRUARY 1972. THE FGD SYSTEM INCLUDES TWO SCRUBBING TRAINS FOR THE CONTROL OF PARTICULATES AND SULFUR DIOXIDE. MODULE AVAILABILITY, OPERABILITY, RELIABILITY, AND UTILIZATION INDEX VALUES FOR THE PERIOD ARE POSTED IN TABLE THREE. THE BOILER FIRED BOTH LOW SULFUR WESTERN COAL AND HIGH SULFUR ILLINOIS COAL DURING SEPARATE MONTHS. THE FIXATION AND HAULAWAY OF SCRUBBER WASTES CONTINUED DURING THE PERIOD.
I.D. NUMBER 32 DETROIT EDISON ST. CLAIR NO 6 163 MW - RETROFIT COAL 3.7 PERCENT SULFUR PEABODY ENGINEERING LIMESTONE SCRUBBING STARTUP 5/76	REFER TO THE BACKGROUND INFORMATION SECTION IN TABLE 3 OF THIS REPORT. A 30-DAY VENDOR QUALIFICATION RUN AND A WEEK-LONG FINAL ACCEPTANCE TEST WERE SUCCESSFULLY COMPLETED DURING THE SPRING OF 1976. THE UTILITY IS NOW IN THE PROCESS OF CONDUCTING A MINIMUM TWO-MONTH INTERNAL DEMONSTRATION PROGRAM DURING WHICH THE SCRUBBERS WILL OPERATE IN THE SO2-REMOVAL MODE. THIS PROGRAM IS BEING CONDUCTED PRIMARILY BY PLANT PERSONNEL. FOLLOWING COMPLETION OF THE SO2 PROGRAM, THE VENTURI SCRUBBERS WILL REMAIN IN THE FLUE GAS PATH, OPERATING IN THE PARTICULATE-REMOVAL MODE.
I.D. NUMBER 33 DUQUESNE LIGHT ELRAMA POWER STATION 510 MW - RETROFIT COAL 1.0 - 2.8 PERCENT SULFUR CHEMICO LIME SCRUBBING STARTUP 10/75	REFER TO THE BACKGROUND INFORMATION SECTION IN TABLE 3 OF THIS REPORT. THIS SCRUBBING SYSTEM, WHICH CONSISTS OF FIVE SINGLE-STAGE MODULES, WAS INITIALLY PLACED IN SERVICE OCTOBER 26, 1975. INITIAL OPERATION PROCEEDED WITH FLUE GAS FROM ONE BOILER BEING TREATED BY FIVE SCRUBBING VESSELS. DURING THE REPORT PERIOD OPERATIONS PROCEEDED WITH TWO BOILERS COUPLED INTO THE 5-MODULE SCRUBBING SYSTEM. ONE SINGLE-STAGE SCRUBBING MODULE OPERATED WITH TWO RUBBER-LINED RECYCLE PUMPS IN SERVICE. THE SCRUBBING WASTES ARE CHEMICALLY FIXATED BY THE IUCS METHOD AND LANDFILLED.
I.D. NUMBER 34 DUQUESNE LIGHT PHILLIPS POWER STATION 410 MW - RETROFIT COAL 1.0- 2.8 PERCENT SULFUR CHEMICO LIME SCRUBBING STARTUP 7/73	REFER TO THE BACKGROUND INFORMATION SECTION IN TABLE 3 OF THIS REPORT. THIS SCRUBBING SYSTEM HAS BEEN IN SERVICE SINCE JULY 1973. THE UTILITY REPORTED THAT OPERATIONS DURING THE REPORT PERIOD WERE CONDUCTED WITH BOILER NOS. 2 THROUGH 6 COUPLED INTO THE SCRUBBING SYSTEM. BOILER NO.1 REMAINED OUT OF SERVICE FOR OVERHAUL AND REPAIRS. THE IUCS INTERIM SCRUBBER SLUDGE PROCESSING PLANT IS NOW OPERATIONAL AT THE PLANT SITE. THE CHEMICALLY FIXED SLUDGE IS BEING DISPOSED IN AN OFF-SITE LANDFILL AREA.
I.D. NUMBER 35 EASTERN KENTUCKY POWER COOP SPURLOCK GENERATING PLANT NO.2 500 MW - NEW COAL NOT SELECTED NOT SELECTED STARTUP 3/80	THE SPURLOCK GENERATING PLANT IS LOCATED APPROXIMATELY 3-MILES WEST OF MAYSVILLE, KENTUCKY. TWO NEW COAL-FIRED UNITS ARE SCHEDULED FOR THIS STATION. UNIT NO.1 IS SCHEDULED FOR OPERATION IN MAY 1977. UNIT NO.2, WHICH WILL HAVE TO MEET NSPS, IS IN THE PLANNING STAGE. PARTICULATES WILL BE CONTROLLED BY A 99.5 PERCENT EFFICIENT ESP. DESULFURIZATION MAY BE REQUIRED IF THE UTILITY CANNOT SECURE A LONG-TERM CONTRACT FOR THE PURCHASE OF LOW SULFUR COAL. A DECISION WILL BE MADE SOMETIME IN THE EARLY PART OF 1977.

TABLE 2
STATUS OF FGD SYSTEMS DURING 12/76

COMPANY POWER STATION	CURRENT MONTH
I.D. NUMBER 36 GENERAL MOTORS CHEVROLET PARMA 1 2 3 & 4 32 MW - RETROFIT COAL 2.5 PERCENT SULFUR KOCH/GENERAL MOTORS DOUBLE ALKALI SCRUBBING STARTUP 3/74	REFER TO BACKGROUND INFORMATION SECTION IN TABLE 3 OF THIS REPORT. THE EMISSION CONTROL SYSTEM FOR THESE 4-COAL FIRED STOKER BOILERS CONSISTS OF MECHANICAL COLLECTORS INSTALLED UPSTREAM OF A DILUTE DOUBLE ALKALI SCRUBBING SYSTEM. THE FGD SYSTEM HAS BEEN IN SERVICE SINCE MARCH 1974. SYSTEM OPERABILITY INDEX VALUES FOR THE MONTHS OF NOVEMBER AND DECEMBER WERE 60 PERCENT AND 22 PERCENT, RESPECTIVELY. THE ANNUAL SYSTEM OPERABILITY INDEX VALUE FOR 1976 AVERAGED 64 PERCENT.
I.D. NUMBER 37 GULF POWER CO. SCHOLZ NOS. 1B & 2B 23 MW - RETROFIT COAL 5.0 PERCENT SULFUR (MAX) CHIYODA INTERNATIONAL THOROUGHBRED 101 STARTUP 3/75	REFER TO THE BACKGROUND INFORMATION SECTION IN TABLE 3 OF THIS REPORT. THIS PROTOTYPE DEMONSTRATION UNIT WAS FIRST PUT INTO THE FLUE GAS PATH ON FEBRUARY 11,1976. THE OPERABILITY INDEX FOR OPERATIONS DURING 1975 WAS 60 PERCENT. THE UNIT WAS IN SERVICE THROUGHOUT THE REPORT MONTHS, ACHIEVING OPERABILITY INDEX VALUES OF 99.5 AND 99.6 PERCENT,RESPECTIVELY. THE ANNUAL AVERAGE OPERABILITY INDEX VALUE FOR 1976 OPERATIONS WAS 64 PERCENT(FOR 9 MONTHS OF OPERATION). THE PROTOTYPE FGD UNIT IS SCHEDULED TO CONTINUE OPERATIONS THROUGHOUT THE COMING YEAR.
I.D. NUMBER 38 INDIANAPOLIS POWER & LIGHT CO. PETERSBURG NO 3 530 MW - NEW COAL 3.0-3.5 PERCENT SULFUR UNIVERSAL OIL PRODUCTS LIMESTONE SCRUBBING STARTUP 9/77	THE EMISSION CONTROL SYSTEM FOR THIS NEW COAL-FIRED 530-MW UNIT CONSISTS OF A HIGH-EFFICIENCY ESP INSTALLED UPSTREAM OF A WET LIMESTONE SCRUBBING SYSTEM SUPPLIED BY UOP. DESIGN PARTICULATE AND SULFUR DIOXIDE REMOVAL EFFICIENCIES ARE 99.3 AND 85 PERCENT,RESPECTIVELY. THE SCRUBBING WASTES WILL BE STABILIZED (IUCS) AND DISPOSED ON THE PLANT SITE. THE WET SCRUBBING SYSTEM INCLUDES FOUR TCA MODULES FOR THE REMOVAL OF SULFUR DIOXIDE. TO DATE, CONSTRUCTION IS PROCEEDING ACCORDING TO SCHEDULE. THE INSTALLATION OF WIRING AND RUBBER LINING IS NOW IN PROGRESS.
I.D. NUMBER 39 INDIANAPOLIS POWER & LIGHT CO. PETERSBURG NO 4 530 MW - NEW COAL 3.5 PERCENT SULFUR NOT SELECTED LIMESTONE SCRUBBING STARTUP 4/82	INDIANAPOLIS POWER & LIGHT ANNOUNCED THAT A NEW COAL-FIRED POWER GENERATING UNIT IS BEING PLANNED FOR THEIR PETERSBURG GENERATING STATION LOCATED IN PETERSBURG,INDIANA.THIS NEW UNIT WILL FIRE HIGH-SULFUR SUBBITUMINOUS COAL WITH A HEATING VALUE OF 11,000 BTU/LB AND ASH AND SULFUR CONTENTS OF 10 PERCENT AND 3.5 PERCENT, RESPECTIVELY. THE UTILITY IS NOW CONSIDERING VARIOUS FGD STRATEGIES FOR THE CONTROL OF SULFUR DIOXIDE, GIVING PRIMARY CONSIDERATION TO WET LIMESTONE SCRUBBING. THE COMMERCIAL START-UP DATE IS SCHEDULED FOR APRIL 1982.
I.D. NUMBER 40 KANSAS CITY POWER & LIGHT HAWTHORN NO 3 140 MW - RETROFIT COAL 0.6- 3.0 PERCENT SULFUR COMBUSTION ENGINEERING LIMESTONE INJECTION &WET SCRUB STARTUP 11/72	REFER TO THE BACKGROUND INFORMATION SECTION IN TABLE 3 OF THIS REPORT. THIS INJECTION AND TAIL-END WET SCRUBBING SYSTEM WAS DESIGNED AND INSTALLED BY COMBUSTION ENGINEERING AND PLACED IN SERVICE NOVEMBER 1972. OPERATION OF THIS SCRUBBING SYSTEM DURING 1976 HAS BEEN INTERMITTENT. A NUMBER OF MAJOR MODIFICATIONS ARE BEING PERFORMED TO THE SYSTEM BY THE UTILITY.MAJOR CHANGES HAVE INCLUDED*CONVERSION FROM A LIMESTONE TO A LIME INJECTION SYSTEM, DEMISTER WASH SYSTEM MODIFICATIONS, SCRUBBER BED SPRAY SYSTEM MODIFICATIONS, AND MODIFICATIONS TO THE GAS DAMPER ARRANGEMENT.

TABLE 2
STATUS OF FGD SYSTEMS DURING 12/76

COMPANY POWER STATION	CURRENT MONTH
I.D. NUMBER 41 KANSAS CITY POWER & LIGHT HAWTHORN NO 4 100 MW - RETROFIT COAL 0.6- 3.0 PERCENT SULFUR COMBUSTION ENGINEERING LIMESTONE INJECTION &WET SCRUB STARTUP 8/72	REFER TO THE BACKGROUND INFORMATION SECTION IN TABLE 3 OF THIS REPORT. THIS INJECTION AND TAIL-END WET SCRUBBING SYSTEM WAS DESIGNED AND INSTALLED BY COMBUSTION ENGINEERING AND PLACED IN SERVICE AUGUST 1972. FGD SYSTEM OPERATIONS DURING 1976 HAVE PROCEEDED ON AN INTERMITTENT BASIS. PROBLEMS ENCOUNTERED HAVE INCLUDED PLUGGING IN THE MARBLE BED AND REHEAT TUBE BUNDLES, DRAFT LOSSES THROUGH THE DUCTWORK AND PUMP FAILURES. THE UTILITY IS NOW CONVERTING THIS SYSTEM FROM LIMESTONE INJECTION TO LIME INJECTION AND TAIL-END WET SCRUBBING.
I.D. NUMBER 42 KANSAS CITY POWER & LIGHT LA CYGNE NO 1 820 MW - NEW COAL 5.0 PERCENT SULFUR BABCOCK & WILCOX LIMESTONE SCRUBBING STARTUP 2/73	REFER TO THE BACKGROUND INFORMATION SECTION IN TABLE 3 OF THIS REPORT. THIS 7-MODULE FGD SYSTEM HAS BEEN IN OPERATION SINCE FEBRUARY 1973. THE ANNUAL SYSTEM OPERABILITY INDEX VALUE AVERAGED IN EXCESS OF 76 PERCENT FOR 1974. ANNUAL AVERAGE AVAILABILITY INDEX VALUES FOR 1975 AND 1976 EXCEEDED 84 PERCENT AND 91 PERCENT,RESPECTIVELY. THE NO.1 UNIT WAS IN SERVICE THROUGHOUT THE REPORT PERIOD, ACHIEVING AVERAGE AVAILABILITY INDEX VALUES OF 94 AND 90 PERCENT FOR THE MONTHS OF NOVEMBER AND DECEMBER, RESPECTIVELY.
I.D. NUMBER 43 KANSAS POWER & LIGHT JEFFERY NO. 1 680 MW - NEW COAL 0.32 PERCENT SULFUR COMBUSTION ENGINEERING LIMESTONE SCRUBBING STARTUP 6/78	THE UTILITY HAS PURCHASED AN AIR QUALITY CONTROL SYSTEM FROM COMBUSTION ENGINEERING FOR PARTICULATE AND SO2 REMOVAL. THE SYSTEM WILL CONSIST OF AN ESP DOWNSTREAM OF THE AIR HEATER PLUS ID FANS AND SPRAY TOWERS. AN OVERFIRE AIR SYSTEM AT THE TANGENTIAL FIRED PULVERIZED BURNERS WILL CONTROL THE NOX EMISSIONS. THE CLEANED GASES WILL BE VENTED TO A 600 FOOT STACK. THE CONSTRUCTION OF THIS NEW INSTALLATION IS PROCEEDING ACCORDING TO SCHEDULE. THIS UNIT WILL FIRE 250 TONS/HR OF WYOMING COAL WITH A HEAT CONTENT OF 8000 BTU/LB, 0.3% SULFUR AND 6% ASH.
I.D. NUMBER 44 KANSAS POWER & LIGHT JEFFERY NO. 2 680 MW - NEW COAL 0.32 PERCENT SULFUR COMBUSTION ENGINEERING LIMESTONE SCRUBBING STARTUP 6/79	THE UTILITY HAS PURCHASED AN AIR QUALITY CONTROL SYSTEM FROM COMBUSTION ENGINEERING FOR PARTICULATE AND SO2 REMOVAL. THE SYSTEM WILL CONSIST OF AN ESP DOWNSTREAM OF THE AIR HEATER PLUS ID FANS AND SPRAY TOWERS. AN OVERFIRE AIR SYSTEM AT THE TANGENTIAL FIRED PULVERIZED BURNERS WILL CONTROL THE NOX EMISSIONS. THE CLEANED GASES WILL BE VENTED TO A 600 FOOT STACK. THE CONSTRUCTION OF THIS NEW INSTALLATION IS PROCEEDING ACCORDING TO SCHEDULE. THIS UNIT WILL 250 TONS/HR OF WYOMING COAL HAVING A HEAT CONTENT OF 8000 BTU/LB, 0.3% SULFUR AND 6% ASH.
I.D. NUMBER 45 KANSAS POWER & LIGHT LAWRENCE NO 4 125 MW - RETROFIT COAL 0.5 PERCENT SULFUR COMBUSTION ENGINEERING LIMESTONE INJECTION &WET SCRUB STARTUP 12/68	REFER TO BACKGROUND INFORMATION SECTION IN TABLE 3 OF THIS REPORT. THE ORIGINAL FGD SYSTEM FOR THIS UNIT WAS PLACED IN SERVICE DECEMBER 1968. IN ACHIEVING AN OPTIMUM MODE OF OPERATION, THE PHYSICAL SCRUBBER PLANT WAS CONSUMED, REQUIRING REPLACEMENT WITH A NEW VENTURI ROD SCRUBBER AND SPRAY TOWER ABSORBER SYSTEM SUPPLIED BY COMBUSTION ENGINEERING.INSTALLATION OF THE NEW SYSTEM IS COMPLETE.INITIAL OPERATION SHOULD COMMENCE IN THE EARLY PART OF 1977. THE UNIT WAS DOWN THROUGHOUT THE REPORT PERIOD BECAUSE OF A SCHEDULED TURBINE OVERHAUL.

TABLE 2
STATUS OF FGD SYSTEMS DURING 12/76

COMPANY POWER STATION	CURRENT MONTH
I.D. NUMBER 46 KANSAS POWER & LIGHT LAWRENCE NO 5 400 MW - NEW COAL 0.5 PERCENT SULFUR COMBUSTION ENGINEERING LIMESTONE INJECTION &WET SCRUB STARTUP 11/71	REFER TO BACKGROUND INFORMATION SECTION IN TABLE 3 OF THIS REPORT. THE ORIGINAL FGD SYSTEM FOR THIS UNIT WAS PLACED IN SERVICE NOVEMBER 1971 RENTLY BURNING LOW SULFUR WYOMING COAL. THE OPERATION OF THE SCRUBBER HAS IN ACHIEVING AN OPTIMUM MODE OF OPERATION, THE PHYSICAL SCRUBBER PLANT WAS CONSUMED, REQUIRING REPLACEMENT WITH TWO NEW VENTURI ROD SCRUBBERS AND SPRAY TOWER ABSORBERS SUPPLIED BY COMBUSTION ENGINEERING. IS PROCEEDING ON POURING OF THE FOUNDATION AND ERECTION OF THE STRUCTURAL STEEL. THE BOILER IS IN SERVICE, FIRING FUEL OIL.
I.D. NUMBER 47 KENTUCKY UTILITIES GREEN RIVER UNITS 1 AND 2 64 MW - RETROFIT COAL 3.8 PERCENT SULFUR AMERICAN AIR FILTER LIME SCRUBBING STARTUP 9/75	REFER TO BACKGROUND INFORMATION SECTION IN TABLE 3 OF THIS REPORT. BOILERS 1, 2, AND 3 ARE EXISTING UNITS WHICH HAVE BEEN FITTED WITH MECHANICAL COLLECTORS AND A WET LIME SCRUBBER-ABSORBER MODULE FOR THE CONTROL OF PARTICULATES AND SULFUR DIOXIDE. THE SCRUBBER MODULE WAS ORIGINALLY PLACED IN THE FLUE GAS PATH SEPT. 9, 1975. 100,100,100, AND 94 PERCENT RESPECTIVELY FOR THE MONTH OF OCTOBER. AN ANNUAL OPERABILITY INDEX VALUE OF 87 PERCENT.
I.D. NUMBER 48 KEY WEST UTILITY BOARD STOCK ISLAND PLANT 37 MW - NEW OIL 2.4 PERCENT SULFUR ZURN AIR SYSTEMS LIMESTONE SCRUBBING STARTUP 10/72	REFER TO BACKGROUND INFORMATION SECTION IN TABLE 3 OF THIS REPORT. THIS FGD SYSTEM HAS BEEN OPERATIONAL SINCE OCTOBER 1972. THE FGD SYSTEM HAS BEEN OUT OF SERVICE SINCE JANUARY 28,1975. MODIFICATIONS AND REPAIRS ARE CURRENTLY IN PROGRESS. SYSTEM RESTART IS STILL INDEFINITE. A CHECKOUT OF ALL SYSTEM MOTORS AND PUMPS MUST BE COMPLETED BEFORE STARTUP CAN COMMENCE. DURING THE REPORT PERIOD THE UNIT DID NOT OPERATE BECAUSE OF REPAIRS TO BOILER TUBES THAT FAILED. RESTART IS SCHEDULED SHORTLY.
I.D. NUMBER 49 LOUISVILLE GAS & ELECTRIC CANE RUN NO 4 178 MW - RETROFIT COAL 3.5 - 4.0 PERCENT SULFUR AMERICAN AIR FILTER LIME SCRUBBING STARTUP 8/76	THE CONSTRUCTION OF THE SCRUBBING FACILITY WAS COMPLETED ON JULY 5, 1976. PRESTART-UP TESTING WAS COMPLETED DURING THE REMAINDER OF THE MONTH. THE TESTING INCLUDED AIR/WATER OPERATION WITH CONCURRENT EQUIPMENT CHECKOUT. THE SCRUBBING SYSTEM COMMENCED OPERATION ON FLUE GAS AUGUST 1 AND HAS BEEN IN SERVICE ON A CONTINUOUS BASIS THROUGHOUT THE REMAINDER OF THE YEAR. TO DATE, THE CARBIDE LIME SCRUBBING SYSTEM HAS BEEN AVAILABLE TO THE BOILER ON AN APPROXIMATELY 90 PERCENT BASIS. A NUMBER OF MINOR MECHANICAL MODIFICATIONS HAVE BEEN PERFORMED ON THE SYSTEM. 14
I.D. NUMBER 50 LOUISVILLE GAS & ELECTRIC CANE RUN NO 5 183 MW - RETROFIT COAL 3.5 - 4.0 PERCENT SULFUR COMBUSTION ENGINEERING LIME SCRUBBING STARTUP 12/77	THE UTILITY HAS SIGNED A CONSENT AGREEMENT WITH THE EPA FOR THE INSTALLATION AND OPERATION OF FGD EQUIPMENT ON THIS UNIT BY DECEMBER 1,1977. THE CONTRACT FOR THIS LIME SCRUBBING SYSTEM HAS BEEN AWARDED TO COMBUSTION ENGINEERING. THE SYSTEM IS NOW UNDER CONSTRUCTION. WORK IS IN PROGRESS ON THE FOUNDATION AND ERECTION OF STRUCTURAL STEEL. THE SYSTEM IS SCHEDULED FOR START-UP IN DECEMBER 1977.

TABLE 2
STATUS OF FGD SYSTEMS DURING 12/76

COMPANY POWER STATION	CURRENT MONTH
I.D. NUMBER 51 LOUISVILLE GAS & ELECTRIC CANE RUN NO 6 277 MW - RETROFIT COAL 3.5 - 4.0 PERCENT SULFUR ADL/COMBUSTION EQUIP ASSOCIATE DOUBLE ALKALI SCRUBBING STARTUP 2/79	THE CONTRACT FOR THIS FULL-SCALE DEMONSTRATION SCRUBBING SYSTEM HAS BEEN AWARDED TO A.D.LITTLE/COMBUSTION EQUIPMENT ASSOC. FOR THE INSTALLATION OF A DOUBLE ALKALI SCRUBBER. THE FEDERAL EPA WILL SUBSIDIZE A MAXIMUM $4.5 MM FOR OPERATION, RESEARCH AND DEVELOPMENT, AND REPORT WRITING FOR A ONE-YEAR PERIOD FOLLOWING THE FIRST THREE MONTHS OF OPERATION(NOTE*THIS SUBSIDY WILL NOT BE APPLIED FOR ANY CAPITAL EXPENDITURES). ENGINEERING DESIGN WORK IS NOW UNDERWAY. START-UP IS SCHEDULED FOR FEBRUARY 1,1979.
I.D. NUMBER 52 LOUISVILLE GAS & ELECTRIC MILL CREEK NO 1 330 MW - RETROFIT COAL 3.5- 4.0 PERCENT SULFUR NOT SELECTED LIME SCRUBBING STARTUP 1/82	A COMPLIANCE SCHEDULE HAS BEEN SUBMITTED TO THE JEFFERSON COUNTY AIR POLLUTION CONTROL DISTRICT WITH 1/82 ESTABLISHED AS THE STARTUP DATE FOR AN FGD SYSTEM.
I.D. NUMBER 53 LOUISVILLE GAS & ELECTRIC MILL CREEK NO 2 330 MW - RETROFIT COAL 3.5- 4.0 PERCENT SULFUR NOT SELECTED LIME SCRUBBING STARTUP 1/81	A COMPLIANCE SCHEDULE HAS BEEN SUBMITTED TO THE JEFFERSON COUNTY AIR POLLUTION CONTROL DISTRICT WITH 1/81 ESTABLISHED AS THE STARTUP DATE FOR AN FGD SYSTEM.
I.D. NUMBER 54 LOUISVILLE GAS & ELECTRIC MILL CREEK NO 3 425 MW - NEW COAL 3.5- 4.0 PERCENT SULFUR AMERICAN AIR FILTER LIME SCRUBBING STARTUP 7/77	THE UTILITY HAS SIGNED A CONSENT AGREEMENT WITH THE EPA FOR THE INSTALLATION AND OPERATION OF FGD EQUIPMENT ON THIS POWER GENERATING UNIT BY JULY 1,1977. THIS NEW FACILITY WILL BE REQUIRED TO MEET FEDERAL NSPS FOR THE LIMITATION OF SO2 EMISSIONS. CONTRACT HAS BEEN AWARDED TO AMERICAN AIR FILTER. THE SYSTEM WILL OPERATE ON A CLOSED WATER LOOP AND THE SLUDGE WILL BE STABILIZED. CONSTRUCTION HAS BEGUN ON THE FGD SYSTEM.
I.D. NUMBER 55 LOUISVILLE GAS & ELECTRIC MILL CREEK NO 4 425 MW - NEW COAL 3.5- 4.0 PERCENT SULFUR AMERICAN AIR FILTER LIME SCRUBBING STARTUP 7/79	THE UTILITY HAS SIGNED A CONSENT AGREEMENT WITH THE EPA FOR THE INSTALLATION AND OPERATION OF FGD EQUIPMENT ON THIS POWER GENERATING UNIT BY JULY 1,1979. THIS NEW FACILITY WILL BE REQUIRED TO MEET FEDERAL NSPS FOR THE LIMITATION OF SO2 EMISSIONS. THE CONTRACT HAS BEEN AWARDED TO AMERICAN AIR FILTER FOR A LIME SCRUBBING SYSTEM.

TABLE 2
STATUS OF FGD SYSTEMS DURING 12/76

COMPANY POWER STATION	CURRENT MONTH
I.D. NUMBER 56 LOUISVILLE GAS & ELECTRIC PADDYS RUN NO 6 65 MW - RETROFIT COAL 3.5-4.0 PERCENT SULFUR COMBUSTION ENGINEERING LIME SCRUBBING STARTUP 4/73	REFER TO THE BACKGROUND INFORMATION SECTION IN TABLE 3 OF THIS REPORT. THIS SCRUBBING SYSTEM WAS DESIGNED BY COMBUSTION ENGINEERING AND PLACED IN SERVICE IN APRIL 1973. PADDYS RUN NO.6 IS A PEAK-LOAD UNIT THAT OPERATES ONLY DURING DEMAND PERIODS. THE UNIT WAS OPERATIONAL DURING THE REPORT PERIOD, BEING AVAILABLE TO THE BOILER ON 99 PERCENT BASIS. SCRUBBER OPERATIONS WERE CONDUCTED ON CARBIDE LIME SLURRY DURING THE PERIOD. THE EPA-SUBSIDIZED SCRUBBER/SLUDGE STUDY CALLS FOR A HIGH CALCIUM VIRGIN LIME RUN TO COMMENCE ON MARCH 1, 1977.
I.D. NUMBER 57 MINNESOTA POWER AND LIGHT CO. CLAY BOSWELL STATION NO.4 500 MW - NEW COAL 0.8 PERCENT SULFUR NOT SELECTED NOT SELECTED STARTUP 0/80	THE UTILITY IS CURRENTLY REQUIESTING AND EVALUATING BIDS FOR THE INSTALLATION OF A SCRUBBING SYSTEM ON THIS NEW COAL-FIRED UNIT PLANNED FOR COMMERCIAL SERVICE IN THE SPRING OF 1980. THIS NEW UNIT WILL FIRE LOW SULFUR SUBBITUMINOUS COLSTRIP COAL. THE UTILITY IS CONSIDERING DRY COLLECTION AND WET SCRUBBING STRATEGIES (ESP AND SCRUBBERS) AND TWO-STAGE WET SCRUBBING STRATEGIES (SCRUBBER-ABSORBERS) FOR THE REMOVAL OF PARTICULATES AND SULFUR DIOXIDE. A FINAL DECISION WILL BE ANNOUNCED BY THE UTILITY SHORTLY.
I.D. NUMBER 58 MINNKOTA POWER COOPERATIVE MILTON R. YOUNG NO. 2 450 MW - NEW LIGNITE - 6.500 BTU, 0.7% S ADL/COMBUSTION EQUIP ASSOCIATE LIME/ALKALINE FLYASH SCRUBBING STARTUP 8/77	THE CONTRACT FOR THIS LIME/ALKALINE FLYASH SCRUBBING SYSTEM HAS BEEN AWARDED TO ADL/COMBUSTION EQUIPMENT ASSOCIATES. THE EMISSION CONTROL SYSTEM FOR THIS UNIT CONSISTS OF A HIGH-EFFICIENCY ESP UPSTREAM OF TWO SPRAY TOWERS. DESIGN PARTICULATE AND SULFUR DIOXIDE REMOVAL EFFICIENCIES ARE 99.6 AND 75 PERCENT,RESPECTIVELY. SITE PREPARATION AND FOUNDATION WORK HAS BEEN COMPLETED. ALL EQUIPMENT FABRICATION HAS BEEN COMPLETED. EQUIPMENT ERECTION IS NOW IN PROGRESS. ALL HVAC AND ELECTRICAL CONTRACTS FOR THE SCRUBBER AND ANCILLARY EQUIPMENT HAVE BEEN AWARDED.
I.D. NUMBER 59 MONTANA POWER CO. COLSTRIP NO 1 360 MW - NEW COAL 0.8 PERCENT SULFUR ADL/COMBUSTION EQUIP ASSOCIATE LIME/ALKALINE FLYASH SCRUBBING STARTUP 10/75	THE COLSTRIP PLANT IS A MINE MOUTH INSTALLATION. CONSTRUCTION ON THIS UNIT WAS COMPLETED BEHIND SCHEDULE. THE FGD SYSTEM STARTED UP IN LATE 1975 AND PROCEEDED THROUGH A SHAKEDOWN AND DEBUGGING OPERATION PHASE. THE UNIT HAS BEEN OPERATING AT FULL COMMERCIAL CAPACITY. THE SCRUBBING SYSTEM DESIGN INCORPORATES THE VENTURI WET SCRUBBERS FOR PARTICULATE AND SULFUR DIOXIDE REMOVAL. FLUE GAS CANNOT BE BYPASSED AROUND THE SCRUBBING SYSTEM. INFORMATION AND OPERATING DATA WERE NOT MADE AVAILABLE BY THE UTILITY DURING THE REPORT PERIOD.
I.D. NUMBER 60 MONTANA POWER CO. COLSTRIP NO 2 360 MW - NEW COAL 0.8 PERCENT SULFUR ADL/COMBUSTION EQUIP ASSOCIATE LIME/ALKALINE FLYASH SCRUBBING STARTUP 7/76	THE COLSTRIP PLANT IS A MINE MOUTH FACILITY. CONSTRUCTION OF THE FGD SYSTEM HAS BEEN COMPLETED. TURBINE ROLL AND SYSTEM CHECKOUT HAVE BEEN COMPLETED. INITIAL OPERATION OF THE SCRUBBING SYSTEM COMMENCED IN JULY 1976. THIS UNIT IS IDENTICAL TO THE NO.1 SYSTEM DESIGN IN THAT THREE SCRUBBER MODULES ARE INSTALLED FOR PARTICULATE AND SULFUR DIOXIDE REMOVAL. FLUE GAS CONNOT BE BY-PASSED AROUND THE SCRUBBING SYSTEM. INFORMATION AND OPERATING DATA WERE NOT MADE AVAILABLE BY THE UTILITY DURING THE REPORT PERIOD.

TABLE 2
STATUS OF FGD SYSTEMS DURING 12/76

COMPANY POWER STATION	CURRENT MONTH
I.D. NUMBER 61 MONTANA POWER CO. COLSTRIP NO.3 700 MW - NEW COAL 0.7 PERCENT SULFUR ADL/COMBUSTION EQUIP ASSOCIATE LIME/ALKALINE FLYASH SCRUBBING STARTUP 7/80	THE UTILITY ANNOUNCED DURING THE REPORT PERIOD THAT A CONTRACT FOR THE INSTALLATION OF TWO ADDITIONAL LIME/ALKALINE FLYASH SCRUBBING SYSTEMS HAS BEEN AWARDED TO AD LITTLE/COMBUSTION EQUIPMENT ASSOCIATES. THESE SYSTEMS WILL BE INSTALLED ON UNITS NOS. 3 AND 4 OF THE COLSTRIP POWER STATION. COLSTRIP UNITS 1 AND 2 ARE BOTH EQUIPPED WITH OPERATIONAL LIME/ALKALINE FLYASH SCRUBBING SYSTEMS FOR THE REMOVAL OF PARTICULATES AND SULFUR DIOXIDE. ENGINEERING WORK FOR THE NEW SYSTEMS IS NOW UNDERWAY. THIS CONTRACT IS EXPECTED TO EXCEED $50 MM.
I.D. NUMBER 62 MONTANA POWER CO. COLSTRIP NO.4 700 MW - NEW COAL 0.7 PERCENT SULFUR ADL/COMBUSTION EQUIP ASSOCIATE LIME/ALKALINE FLYASH SCRUBBING STARTUP 7/81	THE UTILITY ANNOUNCED DURING THE REPORT PERIOD THAT A CONTRACT FOR THE INSTALLATION OF TWO ADDITIONAL LIME/ALKALINE FLYASH SCRUBBING SYSTEMS HAS BEEN AWARDED TO AD LITTLE/COMBUSTION EQUIPMENT ASSOCIATES. THESE SYSTEMS WILL BE INSTALLED ON UNITS NOS. 3 AND 4 OF THE COLSTRIP POWER STATION. COLSTRIP UNITS 1 AND 2 ARE BOTH EQUIPPED WITH OPERATIONAL LIME/ALKALINE FLYASH SCRUBBING SYSTEMS FOR THE REMOVAL OF PARTICULATES AND SULFUR DIOXIDE. ENGINEERING WORK FOR THE NEW SYSTEMS IS NOW UNDERWAY. THIS CONTRACT IS EXPECTED TO EXCEED $50 MM.
I.D. NUMBER 63 NEVADA POWER HARRY ALLEN STATION NO. 1 500 MW - NEW COAL NOT SELECTED NOT SELECTED STARTUP 6/83	CONSIDERING HOT SIDE ESP IN CONJUNCTION WITH AN FGD SYSTEM. SPECIFICATIONS HAVE NOT YET BEEN PREPARED.
I.D. NUMBER 64 NEVADA POWER HARRY ALLEN STATION NO. 2 500 MW - NEW COAL NOT SELECTED NOT SELECTED STARTUP 6/84	CONSIDERING HOT SIDE ESP IN CONJUNCTION WITH AN FGD SYSTEM. SPECIFICATIONS HAVE NOT YET BEEN PREPARED.
I.D. NUMBER 65 NEVADA POWER HARRY ALLEN STATION NO. 3 500 MW - NEW COAL NOT SELECTED NOT SELECTED STARTUP 6/85	CONSIDERING HOT SIDE ESP IN CONJUNCTION WITH AN FGD SYSTEM. SPECIFICATIONS HAVE NOT YET BEEN PREPARED.

TABLE 2
STATUS OF FGD SYSTEMS DURING 12/76

COMPANY POWER STATION	CURRENT MONTH
I.D. NUMBER 66 NEVADA POWER HARRY ALLEN STATION NO. 4 500 MW - NEW COAL NOT SELECTED NOT SELECTED STARTUP 6/86	CONSIDERING HOT SIDE ESP IN CONJUNCTION WITH AN FGD SYSTEM. SPECIFICATIONS HAVE NOT YET BEEN PREPARED.
I.D. NUMBER 67 NEVADA POWER REID GARDNER NO 1 125 MW - RETROFIT COAL 0.5- 1.0 PERCENT SULFUR ADL/COMBUSTION EQUIP ASSOCIATE SODIUM CARBONATE SCRUBBING STARTUP 4/74	REFER TO THE BACKGROUND INFORMATION SECTION IN TABLE 3 OF THIS REPORT. THIS SODIUM CARBONATE-BASED (TRONA) SCRUBBING SYSTEM CONSISTS OF ONE MODULE CONTAINING A TWIN VARIABLE-THROAT VENTURI SCRUBBER FOLLOWED BY A SINGLE-STAGE PERFORATED-PLATE WASHING TOWER. THE SCRUBBING TRAIN WAS FIRST PLACED IN OPERATION IN APRIL 1974. THE SYSTEM WAS IN SERVICE THROUGHOUT THE REPORT PERIOD, LOGGING SERVICE TIMES OF 508 HOURS AND 599 HOURS FOR THE MONTHS OF NOVEMBER AND DECEMBER, RESPECTIVELY.
I.D. NUMBER 68 NEVADA POWER REID GARDNER NO 2 125 MW - RETROFIT COAL 0.5- 1.0 PERCENT SULFUR ADL/COMBUSTION EQUIP ASSOCIATE SODIUM CARBONATE SCRUBBING STARTUP 4/74	REFER TO THE BACKGROUND INFORMATION SECTION IN TABLE 3 OF THIS REPORT. THIS SODIUM CARBONATE-BASED (TRONA) SCRUBBING SYSTEM CONSISTS OF ONE MODULE CONTAINING A TWIN VARIABLE-THROAT VENTURI SCRUBBER FOLLOWED BY A SINGLE-STAGE PERFORATED-PLATE WASHING TOWER. THE SCRUBBING TRAIN WAS FIRST PLACED IN THE GAS PATH IN APRIL 1974. SYSTEM OPERATION DURING THE REPORT PERIOD WAS INTERMITTENT BECAUSE OF SCRUBBER AND BOILER-RELATED PROBLEMS.
I.D. NUMBER 69 NEVADA POWER REID GARDNER NO 3 125 MW - NEW COAL 0.5- 1.0 PERCENT SULFUR ADL/COMBUSTION EQUIP ASSOCIATE SODIUM CARBONATE SCRUBBING STARTUP 7/76	REFER TO THE BACKGROUND INFORMATION SECTION IN TABLE 3 OF THIS REPORT. THIS UNIT IS A NEW COAL-FIRED BOILER THAT IS EQUIPPED WITH SODIUM CARBONATE-BASED(TRONA)SCRUBBING SYSTEM WHICH INCORPORATES A TWIN VARIABLE-THROAT VENTURI SCRUBBER FOLLOWED BY A SINGLE-STAGE PERFORATED-PLATE WASHING TOWER FOR THE CONTROL OF PARTICULATES AND SULFUR DIOXIDE. THE BOILER COMMENCED OPERATIONS IN APRIL 1976 AND THE SCRUBBER WAS PLACED IN SERVICE THREE MONTHS LATER. THE SYSTEM WAS IN SERVICE THROUGHOUT THE REPORT PERIOD.
I.D. NUMBER 70 NEVADA POWER REID GARDNER NO 4 125 MW - NEW COAL 0-5- 1.0 PERCENT SULFUR ADL/COMBUSTION EQUIP ASSOCIATE SODIUM CARBONATE SCRUBBING STARTUP 0/ 0	NEVADA POWER COMPANY HAS SIGNED A LETTER OF INTENT WITH COMBUSTION EQUIPMENT ASSOCIATES FOR THE CONSTRUCTION OF AN FGD SYSTEM ON REID GARDNER NO. 4. HOWEVER, CONSTRUCTION OF THE BOILER HAS BEEN INDEFINITELY POSTPONED.

TABLE 2
STATUS OF FGD SYSTEMS DURING 12/76

COMPANY POWER STATION	CURRENT MONTH
I.D. NUMBER 71 NEVADA POWER WARNER VALLEY STATION NO. 1 250 MW - NEW COAL NOT SELECTED NOT SELECTED STARTUP 6/82	SPECIFICATIONS ARE BEING PREPARED FOR A SCRUBBING SYSTEM.
I.D. NUMBER 72 NEVADA POWER WARNER VALLEY STATION NO. 2 250 MW - NEW COAL NOT SELECTED NOT SELECTED STARTUP 6/83	SPECIFICATIONS ARE BEING PREPARED FOR A SCRUBBING SYSTEM.
I.D. NUMBER 73 NEW ENGLAND ELEC SYSTEM BRAYTON POINT NO.3 650 MW - RETROFIT COAL 3.0 PERCENT SULFUR NOT SELECTED REGENERABLE NOT SELECTED STARTUP 0/ 0	THE UTILITY IS CURRENTLY INVESTIGATING VARIOUS ADVANCED REGENERABLE FLUE GAS DESULFURIZATION SYSTEMS WHICH OFFER A BREAKTHROUGH IN OPERATING COSTS AND PRODUCE ELEMENTAL SULFUR AS AN END PRODUCT. THE UTILITY IS CURRENTLY INVOLVED IN BENCH AND LABORATORY SCALE INVESTIGATIONS OF SULFUR RECOVERY. THE NO. 3 UNIT IS CURRENTLY OPERATIONAL, FIRING LOW SULFUR FUEL OIL.
I.D. NUMBER 74 NIAGARA MOHAWK POWER COOP. CHARLES R. HUNTLEY NO. 6 100 MW - RETROFIT COAL 2.5-4.5 PERCENT SULFUR ATOMICS INTERNATIONAL AQUEOUS CARBONATE SCRUBBING STARTUP 6/78	THE EMPIRE STATE ELECTRIC ENERGY RESEARCH CORP. HAS BEEN GIVEN PERMISSION BY THE EPA TO NEGOTIATE FOR THE INSTALLATION OF A 100-MW DEMONSTRATION SCRUBBING SYSTEM UTILIZING SULFUR RECOVERY. THE DESIGNATED INSTALLATION SITE IS THE C.R. HUNTLEY STATION OF THE NIAGRA MOHAWK POWER COOP LOCATED NEAR BUFFALO, NEW YORK. THE PROCESS BEING GIVEN PRIMARY CONSIDERATION IS THE AQUEOUS CABONATE SCRUBBING PROCESS OFFERED BY ATOMICS INTERNATIONAL. THE DESIGN COAL SPECIFICATIONS CALL FOR 2.5 TO 4.5 PERCENT SULFUR COAL TO BE BURNED WITH AN SO2 REMOVAL EFFICIENCY OF 90 PERCENT OR 200 PPM.
I.D. NUMBER 75 NORTHERN INDIANA PUB SERVICE BAILLY NO. 7 190 MW - RETROFIT COAL 3 PERCENT SULFUR NOT SELECTED NOT SELECTED STARTUP 0/ 0	CONSIDERING A LIME OR LIMESTONE SCRUBBING UNIT. ALSO WAITING FOR PERFORMANCE OF WELLMAN LORD/ALLIED CHEMICAL UNIT UNDER CONSTRUCTION AT THEIR D.N.MITCHELL NO.11 UNIT. LOW SULFUR COAL MAY BE EMPLOYED TO COMPLY WITH SO2 EMISSION REGULATIONS.

TABLE 2
STATUS OF FGD SYSTEMS DURING 12/76

COMPANY POWER STATION	CURRENT MONTH
I.D. NUMBER 76 NORTHERN INDIANA PUB SERVICE BAILLY NO. 8 400 MW - RETROFIT COAL 3 PERCENT SULFUR NOT SELECTED NOT SELECTED STARTUP 0/ 0	CONSIDERING A LIME OR LIMESTONE SCRUBBING UNIT. ALSO WAITING FOR PERFORMANCE OF WELLMAN LORD/ALLIED CHEMICAL UNIT UNDER CONSTRUCTION AT THEIR D. H. MITCHELL NO. 11 UNIT. LOW SULFUR COAL MAY BE BURNED TO COMPLY WITH SO2 EMISSION REGULATIONS.
I.D. NUMBER 77 NORTHERN INDIANA PUBLIC SERVIC D.H. MITCHELL NO.11 115 MW - RETROFIT COAL 3.2- 3.5 PERCENT SULFUR DAVY POWERGAS/ALLIED CHEMICAL WELLMAN LORD/ALLIED CHEMICAL STARTUP 0/77	THIS FGD SYSTEM IS AN INTEGRATION OF THE WELLMAN-LORD SO2 RECOVERY PROCESS OF DAVY POWERGAS AND ALLIED CHEMICAL'S SO2 TO SULFUR REDUCTION PROCESS. DAVY POWERGAS IS THE ENGINEER AND CONSTRUCTOR OF THE FGD FACILITY AND ALLIED CHEMICAL IS THE SYSTEM OPERATOR AND PRODUCT MARKETER. AT THE PRESENT TIME, INITIATIATION OF OPERATIONS OF THE SO2 RECOVERY SYSTEM HAVE BEEN DELAYED BY BOILER UNAVAILABILITY. START-UP OF SYSTEM OPERATIONS IS INDEFINITE. ALL PROGRAM PARTICIPANTS ARE ANALYZING VARIOUS STRATEGIES TO MINIMIZE THE LENGTH OF THE DELAY PERIOD.
I.D. NUMBER 78 NORTHERN STATES POWER CO. SHERBURNE COUNTY STATION NO.1 710 MW - NEW COAL 0.8 PERCENT SULFUR COMBUSTION ENGINEERING LIMESTONE SCRUBBING STARTUP 3/76	REFER TO THE BACKGROUND INFORMATION SECTION IN TABLE 3 OF THIS REPORT. A PRELIMINARY WATER/AIR SYSTEM CHECKOUT WAS SUCCESSFULLY COMPLETED BY THE UTILITY AND INITIAL OPERATIONS COMMENCED ON MARCH 16, 1976. FULL COMMERCIAL OPERATION OF THE SYSTEM BEGAN ON MAY 1, 1976. THE SCRUBBING SYSTEM FOR THIS UNIT CONSISTS OF 12 MODULES, EACH SCRUBBING MODULE INCORPORATES A VENTURI-ROD SECTION AND A MARBLE BED ABSORBER FOR PARTICULATE AND SULFUR DIOXIDE REMOVAL. SYSTEM DESIGN CALLS FOR 11 MODULES TO BE IN OPERATION FOR FULL LOAD CAPACITY.
I.D. NUMBER 79 NORTHERN STATES POWER CO. SHERBURNE COUNTY STATION NO.2 680 MW - NEW COAL 0.8 PERCENT SULFUR COMBUSTION ENGINEERING LIMESTONE SCRUBBING STARTUP 5/77	THE CONSTRUCTION OF THIS NEW POWER-GENERATING UNIT IS VIRTUALLY COMPLETE. THE EARLY STAGES OF SYSTEM CHECKOUT IS NOW IN PROGRESS. BOILOUT AND STEAM BLOWOUT HAVE BEEN COMPLETED. GAS HAS BEEN PASSED THROUGH THE SCRUBBER MODULES. TURBINE ROLL HAS BEEN SCHEDULED FOR THE LAST WEEK IN JANUARY 1977. THE DESIGN OF THE EMISSION CONTROL SYSTEM FOR THIS UNIT IS IDENTICAL TO THE SYSTEM NOW OPERATIONAL ON THE NO. 1 UNIT. THE SYSTEM DOES NOT INCLUDE FLUE GAS BY-PASS CAPABILITY, NECESSITATING THE SIMULTANEOUS START-UP OF BOTH THE BOILER AND SCRUBBING SYSTEM.
I.D. NUMBER 80 NORTHERN STATES POWER CO. SHERBURNE COUNTY STATION NO.3 860 MW - NEW COAL 0.8 PERCENT SULFUR NOT SELECTED NOT SELECTED STARTUP 5/81	NSP HAS ANNOUNCED THAT TWO ADDITIONAL COAL-FIRED POWER-GENERATING UNITS ARE SCHEDULED TO BE INSTALLED AT THEIR SHERBURNE COUNTY GENERATING STATION IN BECKER, MINNESOTA. COMMERCIAL OPERATION DATES ARE NOW SCHEDULED FOR MAY 1981 AND MAY 1983. EACH UNIT IS NOMINALLY RATED AT 860 MW. THE BOILERS WILL BE DESIGNED TO FIRE MONTANA LOW-SULFUR SUBBITUMINOUS COAL WITH A HEAT CONTENT OF 8300 BTU/LB AND ASH AND SULFUR CONTENTS OF 9.0 AND 0.8 PERCENT, RESPECTIVELY. THE UTILITY IS CONSIDERING TWO-STAGE SCRUBBERS FOR THE CONTROL OF PARTICULATES AND SULFUR DIOXIDE.

TABLE 2
STATUS OF FGD SYSTEMS DURING 12/76

COMPANY POWER STATION	CURRENT MONTH
I.D. NUMBER 81 NORTHERN STATES POWER CO. SHERBURNE COUNTY STATION NO.4 860 MW - NEW COAL 0.8 PERCENT SULFUR NOT SELECTED NOT SELECTED STARTUP 5/83	NSP HAS ANNOUNCED THAT TWO ADDITIONAL COAL-FIRED POWER-GENERATING UNITS ARE SCHEDULED TO BE INSTALLED AT THEIR SHERBURNE COUNTY GENERATING STATION IN BECKER, MINNESOTA. COMMERCIAL OPERATION DATES ARE NOW SCHEDULED FOR MAY 1981 AND MAY 1983. EACH UNIT IS NOMINALLY RATED AT 860 MW. THE BOILERS WILL BE DESIGNED TO FIRE MONTANA LOW-SULFUR SUB-BITUMINOUS COAL WITH A HEAT CONTENT OF 8300 BTU/LB AND ASH AND SULFUR. CONTENTS OF 9.0 AND 0.8 PERCENT, RESPECTIVELY. THE UTILITY IS CONSIDERING TWO-STAGE SCRUBBERS FOR THE CONTROL OF PARTICULATES AND SULFUR DIOXIDE.
I.D. NUMBER 82 OTTER TAIL POWER COMPANY COYOTE STATION NO.1 400 MW - NEW LIGNITE 0.9 PERCENT SULFUR NOT SELECTED NOT SELECTED STARTUP 0/81	THIS NEW COAL-FIRED STATION IS JOINTLY OWNED BY FIVE UTILITIES. OTTER TAIL POWER IS THE MAJOR OWNER AND CONSTRUCTOR. MONTANA-DAKOTA UTILITIES IS THE FACILITY OPERATOR. THIS PLANNED UNIT WILL FIRE LOW SULFUR LIGNITE FROM THE MERCER COUNTY AREA. THE UTILITY IS NOW INVESTIGATING VARIOUS EMISSION CONTROL STRATEGIES TO MEET PARTICULATE AND SULFUR DIOXIDE CODES. SULFUR DIOXIDE REMOVAL STRATEGIES BEING CONSIDERED AT THE PRESENT INCLUDE BOTH WET AND DRY REMOVAL PROCESSES.
I.D. NUMBER 83 PACIFIC POWER AND LIGHT CO. JIM BRIDGER NO. 4 509 MW - NEW COAL 0.56 PERCENT SULFUR(AVG.) UNIVERSAL OIL PRODUCTS SODIUM CARBONATE SCRUBBING STARTUP 9/79	THE PACIFIC POWER & LIGHT CO. AND IDAHO POWER CO. HAVE ANNOUNCED THAT THE PLANS FOR AN EMISSION CONTROL STRATEGY FOR THEIR NEW POWER GENERATING UNIT AT THE JIM BRIDGER PLANT HAVE BEEN FINALIZED. UNIT NO.4 WILL FIRE A LOW SULFUR (0.56 PERCENT) SUBBITUMINOUS COAL AND HAS A NET RATING OF 509 MW. PARTICULATES AND SULFUR DIOXIDE WILL BE CONTROLLED BY A ELECTROSTATIC PRECIPITATOR UPSTREAM OF A SODIUM-BASED WET SCRUBBING SYSTEM. THE FGD CONTRACT HAS BEEN AWARDED TO UOP FOR THREE ABSORPTION TRAINS DESIGNED TO REMOVE 91 PERCENT OF THE SO2 TO MEET THE STRICT WYOMING EMISSION CODES.
I.D. NUMBER 84 PENNSYLVANIA POWER CO. BRUCE MANSFIELD NO. 1 835 MW - NEW COAL 4.7 PERCENT SULFUR CHEMICO LIME SCRUBBING STARTUP 4/76	REFER TO THE BACKGROUND INFORMATION SECTION IN TABLE 3 OF THIS REPORT. THIS EMISSION CONTROL SYSTEM IS CAPABLE OF REMOVING FLYASH AND SO2 FROM 3.35 MM ACFM OF FLUE GAS VIA WET LIME SCRUBBING. THE INITIAL SHAKEDOWN AND DEBUGGING PHASE OF OPERATION BEGAN FOR PART OF THE SYSTEM IN DECEMBER 1975. FULL COMMERCIAL OPERATION COMMENCED IN APRIL 1976. TO DATE, ALL 6 OF THE SCRUBBING TRAINS HAVE BEEN SUCCESSFULLY PUT INTO OPERATION. THE AVAILABILITY INDEX VALUE FOR THE ENTIRE SCRUBBING SYSTEM HAS BEEN IN THE MID 90 PERCENT RANGE SINCE COMMERCIAL START-UP.
I.D. NUMBER 85 PENNSYLVANIA POWER CO. BRUCE MANSFIELD NO. 2 835 MW - NEW COAL 4.7 PERCENT SULFUR CHEMICO LIME SCRUBBING STARTUP 4/77	THE FGD SYSTEM FOR THIS INSTALLATION WILL BE A CHEMICO WET LIME SCRUBBING SYSTEM CAPABLE OF REMOVING PARTICULATE MATTER AND SO2 FROM THE FLUE GAS. THIS SYSTEM IS CURRENTLY UNDER CONSTRUCTION. LONG DELAYS HAVE BEEN EN-COUNTERED IN MATERIAL DELIVERIES. THE FGD SYSTEM STARTUP DATE IS NOW SCHEDULED FOR APRIL 1977. THE DESIGN, ARRANGEMENT AND OPERATION OF THIS SCRUBBING SYSTEM WILL BE IDENTICAL TO THE NO.1 UNIT CURRENTLY OPERATIONAL AT THIS STATION

TABLE 2
STATUS OF FGD SYSTEMS DURING 12/76

COMPANY POWER STATION	CURRENT MONTH
I.D. NUMBER 86 PENNSYLVANIA POWER CO. BRUCE MANSFIELD NO. 3 835 MW - NEW COAL 4.7 PERCENT SULFUR PULLMAN KELLOGG LIME SCRUBBING STARTUP 4/79	THE PULLMAN KELLOGG DIVISION OF PULLMAN INCORPORATED HAS BEEN AWARDED A CONTRACT IN EXCESS $50 MILLION BY THE CAPCO CONSORTIUM FOR THE INSTALLATION OF SULFUR DIOXIDE SCRUBBER ON THIS 835 MW COAL-FIRED POWER-GENERATING UNIT. THE EMISSION CONTROL SYSTEM FOR THIS UNIT WILL CONSIST OF ESP'S FOR PARTICULATE CONTROL UPSTREAM OF 5 WEIR HORIZONTAL CROSSFLOW WET SCRUBBING MODULES EMPLOYING A THIOSORBIC LIME SCRUBBING SOLUTION FOR THE REMOVAL OF SULFUR DIOXIDE. CONSTRUCTION OF THE BOILER IS CURRENTLY IN PROGRESS.
I.D. NUMBER 87 PHILADELPHIA ELECTRIC CO. CROMBY 150 MW - RETROFIT COAL 2-4 PERCENT SULFUR UNITED ENGINEERS / PECO MAGNESIUM OXIDE SCRUBBING STARTUP 6/80	THE UTILITY PLANS TO RETROFIT ONE OF THE TWO BOILERS AT CROMBY WITH AN FGD SYSTEM. HOWEVER, A FINAL DECISION HAS NOT BEEN MADE. THE PROCESS BEING GIVEN PRIME CONSIDERATION IS MAGNESIUM OXIDE SCRUBBING DESIGNED JOINTLY BY UNITED ENGINEERS AND PHILADELPHIA ELECTRIC. ENGINEERING DESIGN WORK IS SCHEDULED TO COMMENCE IN 1977. TENATIVE FGD SYSTEM START-UP IS SCHEDULED FOR JUNE 1980.
I.D. NUMBER 88 PHILADELPHIA ELECTRIC CO. EDDYSTONE NO 1A 120 MW - RETROFIT COAL 2.5 PERCENT SULFUR UNITED ENGINEERS / PECO MAGNESIUM OXIDE SCRUBBING STARTUP 9/75	REFER TO THE BACKGROUND INFORMATION SECTION IN TABLE 3 OF THIS REPORT. THE SO_2 SCRUBBING OPERATIONS HAVE BEEN TEMPORARILY DISCONTINUED AT THIS STATION BECAUSE THE REGENERATION FACILITY AT THE OLIN CHEMICAL SULFURIC ACID PLANT HAS PERMANENTLY CEASED OPERATIONS. THE UTILITY IS NOW RELOCATING THE REGENERATION FACILITY TO THE ESSEX CHEMICAL PLANT LOCATED IN NEWARK, NEW JERSEY. RESUMPTION OF SO_2 SCRUBBING OPERATIONS IS NOW SCHEDULED FOR MAY OF 1977. TO DATE, THE MAGNESIUM OXIDE SCRUBBING UNIT HAS BEEN IN SERVICE FOR ONLY A SHORT PERIOD OF TIME DURING LATE 1975.
I.D. NUMBER 89 PHILADELPHIA ELECTRIC CO. EDDYSTONE NO 1B 240 MW - RETROFIT COAL 2.5 PERCENT SULFUR UNITED ENGINEERS / PECO MAGNESIUM OXIDE SCRUBBING STARTUP 6/80	THE INSTALLATION OF SO_2 SCRUBBERS ON THE BALANCE OF THE FLUE GAS FROM THIS UNIT WILL FOLLOW PENDING THE OUTCOME OF THE PERFORMANCE OF THE SCRUBBING UNIT WHICH HAS BEEN INSTALLED AND INTERMITTENTLY OPERATIONAL ON THE EDDYSTONE NO.1 UNIT. CURRENTLY, 3 WET PARTICULATE SCRUBBERS ARE IN SERVICE ON THIS UNIT. THE UTILITY REPORTS THAT PROBLEMS WITH THE SCRUBBER BOOSTER FANS HAVE HOPEFULLY BEEN SOLVED AND WILL BE RETURNED TO SERVICE WHEN THE UNIT RETURNS TO OPERATION FOLLOWING AN EXTENDED SCHEDULED SHUTDOWN FOR OVERHAUL AND REPAIR.
I.D. NUMBER 90 PHILADELPHIA ELECTRIC CO. EDDYSTONE NO. 2 336 MW - RETROFIT COAL 2.4 PERCENT SULFUR UNITED ENGINEERS / PECO MAGNESIUM OXIDE SCRUBBING STARTUP 6/80	THE UTILITY IS AWAITING PERFORMANCE RESULTS FROM THE EXISTING MAGOX SCRUBBER INSTALLED ON UNIT NO.1 AT THIS STATION BEFORE PROCEEDING WITH THE DESIGN OF AN FGD SYSTEM FOR THIS COAL-FIRED BOILER. THE PROCESS BEING GIVEN PRIME CONSIDERATION IS MAGNESIUM OXIDE SCRUBBING DESIGNED JOINTLY BY UNITED ENGINEERS AND PHILADELPHIA ELECTRIC. ENGINEERING DESIGN WORK IS SCHEDULED TO COMMENCE IN 1977. TENATIVE FGD SYSTEM START-UP IS SCHEDULED FOR JUNE 1980.

PEDCo-ENVIRONMENTAL
SUITE 13 • ATKINSON SQUARE
CINCINNATI, OHIO 45246
513/771-4330

January 31, 1977

Enclosed is a copy of the November-December report on the Status of Flue Gas Desulfurization Systems in the United States. This report is prepared every other month by PEDCo-Environmental, Inc., under a contract to the Industrial Environmental Research Laboratory/RTP and the Division of Stationary Source Enforcement of the U.S. Environmental Protection Agency. Table I, listed below, summarizes the current status of these systems.

Table I

NUMBER AND TOTAL MW OF FGD SYSTEMS

Status	No. of units	MW
Operational	30	6,476
Under construction	31	13,309
Planning		
Contract awarded	20	9,981
Letter of intent	2	365
Requesting/evaluating bids	4	2,327
Considering only FGD systems	37	16,726
TOTAL	124	49,184

Table II, gives the categorized breakdown for FGD units, comparing the December report totals with those of the October report.

Table III summarizes the individual units that changed status during the report period.

BRANCH OFFICES

Suite 110, Crown Center
Kansas City, Mo. 64108

Suite 107-B Professional Village
Chapel Hill, N.C. 27514

Table II

NUMBER AND TOTAL MW OF FGD SYSTEMS

DECEMBER REPORT PERIOD VERSUS OCTOBER REPORT PERIOD

	November-December		September-October	
	1976		1976	
Status	No. of units	MW	No. of units	MW
Operational	30	6,476	30	6,476
Under construction	31	13,309	24	9,869
Planning	63	29,399	67	30,589
Total	124	49,184	121	46,934

The performance of the operating systems is summarized in Table IV. Other activity highlights during the months of November and December are outlined below:

Allegheny Power System reported that construction is underway at the utility's Pleasants' Units No. 1 and 2, in Bellmont, West Virginia. Construction is currently in the foundation phase and a 1000-foot stack shell has been erected. The flue gas from these two 625-MW units will be scrubbed by Babcock and Wilcox spray towers utilizing a recirculating thiosorbic lime slurry. APS and Babcock and Wilcox are currently in the process of analyzing data from a recently completed 5000-acfm pilot study which simulated conditions that will apply to full-scale installations. This data will be utilized to ascertain optimal scrubber operating conditions. Pleasants' Units No. 1 and 2 are scheduled for start-up in March 1979, and March 1980, respectively.

Arizona Public Service reported the following items in connection with the utility's FGD installations:

> Cholla No. 1 remained in service throughout the report period. The average system reliability index values for the months of November and December were 99.7 and 99.7 percent, respectively.

Construction of Cholla No. 2 is still in progress and on schedule. Start-up is scheduled for June 1978.

The experimental horizontal module at the Four Corners plant operated during the month of November, the test program was concluded December 6, 1976, and the scrubber unit has been dismantled. A summary report on the test results is expected in March 1977.

Basin Electric Power Cooperative reported that it has awarded a contract to Research-Cottrell for limestone scrubbing systems at the utility's Missouri Basin Units No. 1 and 2, in Wheatland, Wyoming. Both of these 550-MW units will fire low-sulfur western coal, with a sulfur content of 0.8 percent. Babcock and Wilcox will provide the pulverized-coal, dry-bottom boilers. These units are scheduled for start-up in April and October of 1980. The units will have to comply with the Wyoming emissions regulation of 0.2 lb SO_2/MM Btu.

The Big Rivers Rural Electric Power Cooperative reported that construction has begun on the Reid Steam Station, Unit No. 2, a new 250-MW coal-fired unit, in Sebree, Kentucky. The FGD system contract awarded to American Air Filter was announced last report period. Construction is currently in the foundation-pouring phase with start-up scheduled for late 1979. The unit will be burning western Kentucky coal with a sulfur content varying from 2.5 to 5.0 percent.

The Central Illinois Light Co. announced that scrubbing operations have been temporarily terminated at the first of four limestone scrubbing modules scheduled for its Duck Creek Station, Unit No. 1. The Ventri-Sorber scrubber module had been operating intermittently since mid-summer of 1976, and it was reported that the primary problem has been scale build-up in the mist eliminator. The unit operated 16 days in October, 1 day in November, and in December, Duck Creek No. 1 was switched to low-sulfur eastern Kentucky coal, with a sulfur content of 0.6 percent. Scrubbing operations will not be restarted until the remaining three scrubbing modules, controlling emissions from 300-MW of generating capacity, have been installed. Start-up for these three modules is scheduled for August 1, 1978. The clarifying system and ball mill, and the major part of the instrumentation for these modules has been installed.

Columbus and Southern Ohio Electric Co. reported that a major fire, causing 2.1 million dollars damage, occurred at the utility's Conesville Station in the A-side module on Unit No. 5. All scrubber internals were destroyed and the

utility estimates repairs to the module will last through June 1977. The Conesville Unit No. 5 has two scrubbing modules, each capable of handling 60 percent of the flue gas flow. Air and water testing of the undamaged B-side module are scheduled to commence in January 1977. Construction has not yet begun on the Conesville No. 6 Unit. Scheduled start-up date is January 1978.

Commonwealth Edison reported that both scrubbing trains at Will County were in service during the months of October and November. The availability index values reported for the A-side and B-side trains were 28 and 76 percent, respectively, in October and 20 and 72 percent, respectively, in November. Simultaneous module service time for the same months were 0 and 47 hours, respectively. Because of the low volume of sludge produced during November, accumulated sludge in the recirculation ponds was retrieved, stabilized with lime and fly ash and transported to the off-site disposal area.

The Detroit Edison Company reported that the St. Clair No. 6 SO_2 scrubber demonstration program continued during the report period. The utility reported availability index values of 80 and 51 percent for November and December, respectively. Solids build-up on the I.D. fan was removed by sandblasting and a decision was made to complete modifications such as fan rebalancing and wash system redesign after the SO_2 demonstration program is completed. The program is currently scheduled for completion by February 1977. Following the completion of the sulfur dioxide removal program, the scrubbing system will continue to operate in the particulate-removal mode only.

Duquesne Light reported the following items in connection with the utility's FGD installations:

> Elrama continued with flue gas from two boilers being treated by five single-stage scrubbing vessels. Also, the utility is conducting an evaluation of rubber-lined recycle pumps which have been installed on one of the vessels.
>
> Phillips operation continued with Boilers No. 2 through 6 coupled into the scrubbing system. The No. 1 boiler remains shutdown. The interim IUCS sludge stabilization facility was installed and started up in December. A contract with Dravo for the purchase of magnesium lime was finalized and the new lime will be added to the system when the third and final thickener is coupled into the system.

General Motors reported that the double alkali scrubbing system at the Chevrolet Parma Steam Plant was operational during the report period. The FGD system operability index values for the months of November and December were 60 and 22 percent, respectively. Two of the four available boilers operated during the period. During the latter part of November and early December, the scrubber was taken off-line to resolve solids deposition in the mix tank, effected by the modification of some piping arrangements. A year-end plant shutdown December 23, further reduced operability, because the local U.A.W. contract specifies that the scrubber may only be operated by union personnel.

Chiyoda International reported that on November 1, Southern Services finished its evaluation of the CT-101 FGD prototype unit. A report on the test program and its results will be published in the spring of 1977. Gulf Power is continuing scrubber operations for an unspecified time period in 1977, in order to accumulate more data. The unit's availability index values for the months of November and December were 99.5 and 99.6 percent, respectively. Three short periods of forced scrubber outage occurred as a result of very minor problems. In December, a demonstration was successfully completed, using 125 tons of synthetic gypsum to make wall board.

Indianapolis Power and Light Co. announced during the report period that a new 530-MW, coal-fired power generating unit is being planned for their Petersburg Generating Station. This new unit will fire high sulfur bituminous coal with an average heat content of 11,000 Btu/lb and ash and sulfur contents of 10 percent and 3.5 percent, respectively. The utility is considering various scrubbing strategies for the control of sulfur dioxide, giving primary considerations to wet limestone scrubbing. Commercial operation is scheduled for April 1982. The utility also reported that construction is 50 percent completed at the Petersburg Unit no. 3, 530-MW boiler and FGD system. Initial electrical work has begun and the rubber lining within the scrubber is currently being installed.

The Kansas City Power and Light Co. reported the following items concerning FGD at the utility's LaCygne and Hawthorn Power Stations:

> The seven scrubbing modules controlling emissions from the 820-MW, coal-fired LaCygne Unit No. 1 performed well during the report period, with average availabilities of 94 and 90 percent for the months of Novem-

ber and December, respectively. The utility reported that no major scrubber problems occurred during November. During December, module A experienced venturi recycle pump problems, and module C had the number of reheat bundles doubled from four to eight.

Major modifications to the scrubbing systems installed on the No. 3 and No. 4 units of the Hawthorn Station are continuing. The existing systems installed on each boiler include a limestone-injection and dual-module tail-end wet scrubbing system. These systems are now being converted to lime-based tail-end wet scrubbing systems. Operation of both systems during the report period was limited because of the ongoing modifications. The A-module on Unit No. 4 was in service during the month of November, logging an operability index value of 91 percent. All modification work is expected to be completed during the first quarter of 1977.

Kansas Power and Light Co. reported the following items concerning FGD at the utility's Jeffrey and Lawrence Power Stations:

Construction is progressing on schedule at the Jeffrey Power Generating Station, Units No. 1 and 2. These two units will function as base-load units, each having a generating capacity of 680 MW. Each unit will fire 250 T/hr of low-sulfur coal, with a sulfur content of 0.3 percent and a heating value of 8000 Btu/lb. Jeffrey Units No. 1 and 2 are scheduled for start-up in June 1978, and June 1979, respectively.

The utility reported that Lawrence Power Station Units No. 4 and 5 are still in the process of being changed over from boiler limestone injection to wet scrubbing systems designed and installed by Combustion Engineering. C-E will be demonstrating a fully-automated scrubbing system on the 400-MW No. 5 unit. This sulfur dioxide control system will consist of two large scrubbing modules, each handling 50 percent of the boiler flue gas. On this unit, the foundation and structural steelwork are in, and some breeching has been installed. C-E is currently working out the logic circuitry for this fully-automated control system. The No. 4 unit, rated at 125 MW, is near to a scrubber system start-up date. Start-up was delayed by scheduled turbine overhaul work in the fourth quarter of 1976. Units No. 4 and 5 will fire 50 and 140 T/hr, respectively, of pulverized coal with a sulfur content of 0.5 percent sulfur and a heating value of 10,000 Btu/lb.

Kentucky Utilities reported that the Green River FGD system achieved operability index values of 100 and 99.6 percent for the months of November and December, respectively. The scrubber system was by-passed during part of the December period for a check of scrubber internals and replacement of balls in the mobile bed contactor.

The Key West Utility Board reported modifications and repairs to the scrubbing system at the Stock Island generating plant were delayed because replacement parts had not yet been delivered. The utility is planning a test period for the first half of 1977. The FGD system will then be shut down because it is not required to meet regulations.

Louisville Gas and Electric reported the following items in regards to the utility's FGD installations:

> The utility reported that the Cane Run Unit No. 4 scrubber system utilized carbide lime for scrubbing during the months of November and December. The operability index values were 95 and 90 percent, respectively.
>
> The construction of Cane Run Unit No. 5 is proceeding on schedule. Total installed capital cost of the system is estimated to be 12 million dollars for the capacity.
>
> The EPA-subsidized scrubber/sludge characterization study at Paddy's Run No. 6 unit was operational during November and December with an availability index value of 99.5 percent for the two-month period. The scrubber operated with carbide lime during the report period. The high-calcium virgin lime operation has been delayed until approximately March 1, 1977, because of the current emergency power situation.

Minnkota Power Cooperative reported that all additional contracts for heating, ventilation, air conditioning, electrical, and ancillary equipment for the Milton R. Young No. 2 FGD system have been awarded. In addition, construction is ongoing and the utility is currently anticipating that it will be ready for FGD system testing when the new 450-MW unit is started-up in May 1977.

Nevada Power reported the following items regarding the utility's FGD installations:

Reid Gardner No. 1 was in service throughout the report period. The system availability index values for the months of November and December wer 86.5 and 92.7 percent, respectively. One forced scrubber outage occurred during November because of a screw conveyor failure, resulting in an inability to mix the chemical absorbent. Two forced scrubber outages occurred during December because of chemical depletion and a plugged sensing line, respectively.

Reid Gardner No. 2 demonstrated an availability index value of 52 percent during November. During a boiler outage to repair a condenser tube leak and bottom ash nozzle, the scrubber's guillotine dampers were badly damaged, and the scrubber remained out of service during the month of December.

Reid Gardner No. 3 was not in operation during the first half of November due to repairs of leaks in the venturi scrubber box. The system was restarted November 19, and experienced one further forced outage during the month, because of a screw conveyor malfunction, preventing chemical mixing. During the month of December, one minor scrubber outage occurred, because of repairs to the I.D. fan expansion joint. The availability index values for the months of November and December were 28.5 and 99.1 percent, respectively.

Northern Indiana Public Service Co. announced that during the report period the Mitchell No. 11 unit was brought down for a scheduled annual boiler overhaul. The demonstration Wellman-Lord SO_2 recovery system was awaiting completion of the overhaul for initiation of its first extended period of operation in an integrated mode. Boiler unavailability of the Mitchell No. 11 unit has resulted in an indefinite period of delay of the demonstration SO_2 recovery program. All participants in the program are now considering and analyzing various alternatives that can minimize the delay of the SO_2 recovery system start-up.

Northern States Power reported the following items concerning the utility's FGD activity:

Sherburne No. 1 remained in service throughout the period achieving total system availability index values of 93.0 and 94.7 percent for the months of November and

December, respectively. Modification to the duplex strainer system is continuing with work about one-third complete. The utility is currently conducting a full-load evaluation study, analyzing system operation on 10 scrubber modules in contrast to the designed 11 modules.

Construction on Sherburne No. 2 is proceeding ahead of schedule, with turbine roll now scheduled for mid-January. The projected start-up date is now March 1, 1977.

The utility is now officially considering FGD for both the No. 3 and No. 4 units at the Sherburne County Generating Station. Bid request and evaluation will start shortly. Each of these Babcock and Wilcox boilers will have a nominal 860-MW rating, and will fire a sub-bituminous coal with a heating value of 8300 Btu/lb and sulfur and ash contents of 0.8 and 9.0, respectively. Particulate and SO_2 emissions for each unit will be controlled by a two-stage scrubbing design, and the design specifications will call for NSPS performance (though particulate control will be more complete, in order to comply with opacity requirements). Units No. 3 and No. 4 are scheduled for start-up in May 1981, and May 1983, respectively.

The Pennsylvania Power Co. reported that the Bruce Mansfield No. 1 scrubbing system was available 100 percent during the report period. Limited service time during the month of November was caused by boiler-related problems.

Philadelphia Electric Co. reported that the 150-MW Cromby unit is scheduled for a retrofit FGD unit to start-up in June 1980. Engineering design work is scheduled to commence in 1977. The plant will be subject to emissions regulations more stringent than Federal NSPS. MgO scrubbing operations at the utility's Eddystone No. 1 unit are scheduled for restart in May 1977. The utility is completing the relocation of regeneration facilities to the Essex Chemical Plant in Newark, New Jersey. The No. 1 power generating unit has been out of service since late November because of modifications to the booster fans. Start-up of Eddystone No. 1B scrubbing operations is now scheduled for June 1980. Engineering design work for the Eddystone No. 2 scrubbing system is scheduled to commence in 1977, with system start-up scheduled for June 1980.

Research-Cottrell reported that the Bahco wet lime scrubbing system installed at the Rickenbacker AFB in Columbus, Ohio did not operate during November because of completion of

repairs to the I.D. fan housing. The system operated during the entire month of December with SO_2 removal efficiency varying from 85 to 90 percent. Lime feed was regulated on a manual basis because of a mulfunctioning slaker. The new stoker boiler has not yet been placed in commercial operation, primarily because of problems related to the particularly severe weather conditions.

South Carolina Public Service reported that construction is progressing on schedule at its Winyah No. 2 Power Station in Georgetown, South Carolina. This new, coal-fired, 280-MW unit will fire 1 percent sulfur coal and SO_2 emissions will be controlled by a Babcock and Wilcox limestone scrubbing system. Start-up is scheduled for May 1, 1977.

Southern Indiana Gas and Electric Co. announced that in December it awarded a contract to FMC for the installation of a double-alkali scrubbing system on A.B. Brown Unit No. 1, a new 250-MW coal-fired unit. The sodium-calcium (soda ash/lime) system will generate a filter cake which will be disposed in a landfill. The system is currently under construction. A contract for the upstream ESP has not yet been awarded. Full commercial operation is scheduled for January 1979.

Springfield City Utilities reported that the 200-MW Southwest No. 1 unit in Springfield, Missouri, did not start-up as scheduled in December 1976. The delay has been caused primarily by electrical wiring problems, and the boiler operation has been undergoing problems in the combustion control and coal-handling system. The experimental sludge disposal strategy consists of stabilization with cement and transport to an on-site landfill. Scheduled start-up date is now projected for February 1977.

The Bechtel Corporation reported that experimental work is continuing at the Shawnee TVA/EPA Alkali Scrubbing Test Facility. From mid-October through early December an intensive flue gas characterization testing program was conducted on the venturi/spray tower system with lime slurry. For the remainder of December the venturi/spray tower system was down for modifications for two-stage oxidation testing. During November, the TCA unit was operated with fly ash-laden flue gas using lime slurry without added magnesium oxide. SO_2 removal was about 80 percent. In late November, fly ash-free limestone tests without magnesium oxide addition were begun on the TCA system. At the same stoichiometry, the pH of the fly ash free slurry was 8.2 to 8.3 as compared with 8.0 in previous runs with fly ash.

Utah Power and Light Co. announced that a contract has been awarded to Chemico for the installation of a SO_2 control system at its Emery Unit No. 1, in Emery County, Utah. The Chemico scrubbing system will be preceded by an upstream Buell/Envirotech ESP for primary particulate control. SO_2 emissions from this 400-MW unit will be controlled by a wet lime, open-water-loop scrubbing system, removing SO_2 with a design efficiency of 80 percent. Sludge will be mixed with fly ash and disposed on-site. Start-up is scheduled for June 1978. At the utility's Huntington Power Station, equipment is now arriving and construction of the scrubbing system will commence shortly. System start-up is scheduled for June 1977.

TABLE III

SUMMARY OF CHANGES

FGD STATUS REPORT, NOVEMBER-DECEMBER, 1976

FGD status report	Operational		Under construction		Contract awarded		Letter of intent		Requesting/ evaluating bids		Considering FGD		Total	
	No.	MW	No.	MW	No.	MW	No.	MW	No.	MW	No.	MW	No.	MW
10/31/76	30	6,476	24	9,869	23	11,671	3	765	7	3,677	34	14,476	121	46,934
Allegheny Power System														
Pleasants No. 1			+1	625	-1	625								
Pleasants No. 2			+1	625	-1	625								
Basin Electric Power Coop.														
Missouri Basin No. 1					+1	550			-1	550				
Missouri Basin No. 2					+1	550			-1	550				
Big Rivers Rural Electric Coop.														
Reid No. 2			+1	250	-1	250								
Central Illinois Light Co.														
Duck Creek No. 1B			+1	300	-1	300								
Indianapolis Power and Light Co.														
Petersburg No. 4											+1	530		
Kansas Power and Light Co.														
Jeffrey No. 1			+1	680	-1	680								
Jeffrey No. 2			+1	680	-1	680								
Northern States Power Co.														
Sherburne No. 3											+1	860		
Sherburne No. 4											+1	860		
South Carolina Public Service Co.														
Winyah No. 2			+1	280	-1	280								
Southern Indiana Gas and Electric Co.														
A.B. Brown No. 1					+1	250			-1	250				
Utah Power and Light														
Emery No. 1					+1	400	-1	400						
12/31/76	30	6,476	31	13,309	20	9,981	2	365	4	2,327	37	16,726	124	49,184

TABLE IV. PERFORMANCE OF OPERATIONAL UNITS DURING THE REPORT PERIOD

Plant	FGD system design capacity	FGD unit on-line during period*	No information for this period	Shut down throughout period	FGD system availability(%)**		FGD system operability(%)**		FGD system reliability (%)**		FGD system utilization (%)**	
					Nov.	Dec.	Nov.	Dec.	Nov.	Dec.	Nov.	Dec.
Cholla	115	115										
Four Corners	160	160										
Duck Creek 1A	100	100										
Will County 1	167	167			46		48		43		38	
St. Clair	163	163			80	51						
Elrama	510	200		310								
Phillips	410	375		35								
Parma	32	16		16								
Scholz - Chiyoda	23	23			99	99	99	99	99	99	99	99
Hawthorn 3	140			140								
Hawthorn 4	100	100					46					
La Cygne	820	820			94	90						
Lawrence 4	125			125								
Lawrence 5	400			400								
Green River 1 & 2	64	64			100	73	100	97	98	87	98	70
Stock Island	37			37								
Cane Run	178	178					95	90				
Paddy's Run	65	65					99	99				
Colstrip 1	360		360									
Colstrip 2	360		360									
Reid Gardner 1	125	125			86	98	81	96	84	98	71	87
Reid Gardner 2	125	125			52		58		51		50	
Reid Gardner 3	125	125			99	28	97	88	99	29	97	29
Sherburne 1	710	710			93	95	100	100				
Bruce Mansfield 1	835		835									
Eddystone 1A	120			120								
Valmont 5	50			50								
Rickenbacker	20	20										
Shawnee 10A	10	10										
Shawnee 10B	10	10										
Total (30)	6,459	3,671	1,555	1,233								

* This category includes the flue gas capacity being handled by the FGD system at least part of the time during the report period.

** The percent figures listed are average values for all the system scrubbing trains during the period in question.

TABLE 2
STATUS OF FGD SYSTEMS DURING 12/76

COMPANY POWER STATION	CURRENT MONTH
I.D. NUMBER 91 POTOMAC ELECTRIC & POWER DICKERSON NO.1 190 MW - RETROFIT COAL CHEMICO NOT SELECTED STARTUP 0/78	THE UTILITY HAS AWARDED A CONTRACT TO CHEMICO AIR POLLUTION FOR THE INSTALLATION OF A WET SCRUBBING SYSTEM ON THIS UNIT. THE SCRUBBER CONSISTS OF A SINGLE MODULE DOUBLE VENTURI THROAT UNIT. THE FIRST VENTURI STAGE IS DESIGNED FOR REMOVAL OF PARTICULATE MATTER ONLY. THE SECOND VENTURI STAGE WILL BE INSTALLED FOR FUTURE CONSIDERATIONS IF THE UTILITY ELECTS TO SCRUB SULFUR DIOXIDE. THE DESIGN ALLOWS CONSIDERATION FOR EITHER A REGENERATIVE OR NON-REGENERATIVE FGD SYSTEM.
I.D. NUMBER 92 POTOMAC ELECTRIC & POWER DICKERSON NO.2 190 MW - RETROFIT COAL CHEMICO NOT SELECTED STARTUP 0/78	THE UTILITY HAS AWARDED A CONTRACT TO CHEMICO AIR POLLUTION FOR THE INSTALLATION OF A WET SCRUBBING SYSTEM ON THIS UNIT. THE SCRUBBER CONSISTS OF A SINGLE MODULE DOUBLE VENTURI THROAT UNIT. THE FIRST VENTURI STAGE IS DESIGNED FOR REMOVAL OF PARTICULATE MATTER ONLY. THE SECOND VENTURI STAGE WILL BE INSTALLED FOR FUTURE CONSIDERATIONS IF THE UTILITY ELECTS TO SCRUB SULFUR DIOXIDE. THE DESIGN ALLOWS CONSIDERATION FOR EITHER A REGENERATIVE OR NON-REGENERATIVE FGD SYSTEM.
I.D. NUMBER 93 PUBLIC SERVICE CO OF COLORADO VALMONT NO. 5 50 MW - RETROFIT COAL 0.72 PERCENT SULFUR UOP / PUB SERVICE OF COLORADO LIMESTONE SCRUBBING STARTUP 10/74	REFER TO BACKGROUND INFORMATION SECTION IN TABLE 3 OF THIS REPORT. THIS SYSTEM HAS BEEN OPERATIONAL SINCE NOVEMBER 1974. THE FGD SYSTEM CURRENTLY OPERATIONAL AT THIS STATION IS AN EXPERIMENTAL UNIT, ORIGINALLY DESIGNED BY UNIVERSAL OIL PRODUCTS FOR PARTICULATE REMOVAL ONLY. ONE OF THE TWO PARALLEL SCRUBBING MODULES WAS CONVERTED TO LIMESTONE SCRUBBING FOR EXPERIMENTAL PURPOSES ONLY.
I.D. NUMBER 94 PUBLIC SERVICE CO OF NEW MEX. SAN JUAN NO. 1 375 MW - NEW COAL 0.8 PERCENT SULFUR DAVY POWERGAS/ALLIED CHEMICAL WELLMAN LORD/ALLIED CHEMICAL STARTUP 7/77	THE CONSTRUCTION OF THIS SYSTEM IS NOW UNDERWAY. THIS FGD SYSTEM IS AN INTEGRATION OF THE WELLMAN LORD SO2 RECOVERY PROCESS OF DAVY POWERGAS AND ALLIED CHEMICAL'S SO2 REDUCTION TO SULFUR PROCESS. DAVY POWERGAS IS THE DESIGN ENGINEERING FIRM. STEARNS AND ROGER IS THE SYSTEM CONSTRUCTOR. THE UTILITY WILL BE THE SYSTEM OPERATORS. A HOT SIDE ELECTROSTATIC PRECIPITATOR WILL BE INSTALLED UPSTREAM OF THE SCRUBBING UNIT. FOUR ABSORBER TOWERS WILL BE INSTALLED FOR EACH UNIT. THREE WILL CARRY THE FULL LOAD. MOLTEN SULFUR WILL BE STORED ON THE PLANT SITE.
I.D. NUMBER 95 PUBLIC SERVICE CO OF NEW MEX. SAN JUAN NO. 2 340 MW - RETROFIT COAL 0.8 PERCENT SULFUR DAVY POWERGAS/ALLIED CHEMICAL WELLMAN LORD/ALLIED CHEMICAL STARTUP 7/77	THE CONSTRUCTION OF THIS SYSTEM IS NOW UNDERWAY. THIS FGD SYSTEM IS AN INTEGRATION OF THE WELLMAN LORD SO2 RECOVERY PROCESS OF DAVY POWERGAS AND ALLIED CHEMICAL'S SO2 REDUCTION TO SULFUR PROCESS. DAVY POWERGAS IS THE DESIGN ENGINEERING FIRM. STEARNS AND ROGER IS THE SYSTEM CONSTRUCTOR. THE UTILITY WILL BE THE SYSTEM OPERATORS. A HOT SIDE ELECTROSTATIC PRECIPITATOR WILL BE INSTALLED UPSTREAM OF THE SCRUBBING UNIT. FOUR ABSORBER TOWERS WILL BE INSTALLED FOR EACH UNIT. THREE MODULES WILL CARRY THE FULL LOAD. MOLTEN SULFUR WILL BE STORED ON THE PLANT SITE.

TABLE 2
STATUS OF FGD SYSTEMS DURING 12/76

COMPANY POWER STATION	CURRENT MONTH
I.D. NUMBER 96 PUBLIC SERVICE CO OF NEW MEX. SAN JUAN NO. 3 500 MW - NEW COAL 0.8 PERCENT SULFUR NOT SELECTED REGENERABLE NOT SELECTED STARTUP 5/81	THE UTILITY HAS PLACED A HOLD ON FURTHER ENGINEERING DESIGN WORK AT THE PRESENT TIME. THE PROJECTED START-UP DATE FOR BOTH UNITS 3 AND 4 IS MAY 1981. THE WELLMAN LORD AND OTHER SULFUR DIOXIDE RECOVERY PROCESSES ARE NOW UNDER CONSIDERATION BY THE UTILITY. AN ESP WILL BE PROVIDED UPSTREAM OF THE FGD SYSTEM FOR PRIMARY PARTICULATE CONTROL.
I.D. NUMBER 97 PUBLIC SERVICE CO OF NEW MEX. SAN JUAN NO. 4 500 MW - NEW COAL 0.8 PERCENT SULFUR NOT SELECTED REGENERABLE NOT SELECTED STARTUP 5/81	THE UTILITY HAS PLACED A HOLD ON FURTHER ENGINEERING DESIGN WORK AT THE PRESENT TIME. THE PROJECTED START-UP DATE FOR BOTH UNITS 3 AND 4 IS MAY 1981. THE WELLMAN LORD AND OTHER SULFUR DIOXIDE RECOVERY PROCESSES ARE NOW UNDER CONSIDERATION BY THE UTILITY. AN ESP WILL BE PROVIDED UPSTREAM OF THE FGD SYSTEM FOR PRIMARY PARTICULATE CONTROL.
I.D. NUMBER 98 PUBLIC SERVICE OF INDIANA GIBSON NO. 3 650 MW - NEW COAL 3.3 PERCENT SULFUR NOT SELECTED NOT SELECTED STARTUP 0/78	THE UTILITY HAS COMPLETED THE EVALUATION OF BID SPECIFICATIONS SUBMITTED FOR FGD SYSTEMS FOR BOTH UNITS 3 AND 4 AT THIS STATION. NO DECISION HAS YET BEEN MADE.
I.D. NUMBER 99 PUBLIC SERVICE OF INDIANA GIBSON NO. 4 650 MW - NEW COAL 3.3 PERCENT SULFUR NOT SELECTED NOT SELECTED STARTUP 0/79	THE UTILITY HAS COMPLETED THE EVALUATION OF BID SPECIFICATIONS SUBMITTED FOR FGD SYSTEMS FOR BOTH UNITS 3 AND 4 AT THIS STATION. NO DECISION HAS YET BEEN MADE.
I.D. NUMBER 100 RICKENBACKER AFB RICKENBACKER 20 MW - RETROFIT COAL 3.6 PERCENT SULFUR RESEARCH COTTRELL LIME SCRUBBING STARTUP 3/76	REFER TO THE BACKGROUND INFORMATION SECTION IN TABLE 3 OF THIS REPORT. THE SCRUBBING SYSTEM WAS FIRST PLACED IN SERVICE MARCH 11, 1976. THE SYSTEM SUPPLIER REPORTED THAT THE SYSTEM REMAINED OUT OF SERVICE THROUGHOUT THE MONTH OF NOVEMBER FOR COMPLETION OF REPAIRS TO THE SCRUBBER FAN THRUST BEARING. THE SCRUBBER WAS PUT BACK IN THE GAS STREAM AND REMAINED IN SERVICE THROUGHOUT THE MONTH. A NEW STOKER BOILER, WHICH WILL REPLACE TWO OF THE OLDER UNITS, IS NOW BEING INSTALLED AT THIS FACILITY.

TABLE 2
STATUS OF FGD SYSTEMS DURING 12/76

COMPANY POWER STATION	CURRENT MONTH
I.D. NUMBER 101 SALT RIVER PROJECT CORONADO NO.1 350 MW - NEW COAL 1.0 PERCENT SULFUR (MAX) PULLMAN KELLOGG LIMESTONE SCRUBBING STARTUP 4/79	THIS NEW UNIT WILL BURN LOW SULFUR WESTERN COAL. 80 PERCENT OF THE GAS WILL BE SCRUBBED TO MEET SULFUR DIOXIDE EMISSION REGULATIONS. THE UTILITY ANNOUNCED THAT A CONTRACT HAS BEEN AWARDED TO PULLMAN/KELLOGG FOR THE INSTALLATION OF TWO WEIR HORIZONTAL CROSSFLOW SCRUBBING MODULES. THE SCRUBBING REAGENT WILL BE LIMESTONE. THE CONTRACT FOR THE ESP HAS BEEN AWARDED TO JOY/WESTERN PRECIPITATION DIVISION. THE CONSULTING ENGINEERING AND CONSTRUCTION FIRM IS BECHTEL.
I.D. NUMBER 102 SALT RIVER PROJECT CORONADO NO.2 350 MW - NEW COAL 1.0 PERCENT SULFUR (MAX) PULLMAN KELLOGG LIMESTONE SCRUBBING STARTUP 4/80	THIS NEW UNIT WILL BURN LOW SULFUR WESTERN COAL. 80 PERCENT OF THE GAS WILL BE SCRUBBED TO MEET SULFUR DIOXIDE EMISSION REGULATIONS. THE UTILITY ANNOUNCED THAT A CONTRACT HAS BEEN AWARDED TO PULLMAN/KELLOGG FOR THE INSTALLATION OF TWO WEIR HORIZONTAL CROSSFLOW SCRUBBING MODULES. THE CONTRACT FOR THE ELECTROSTATIC PRECIPITATOR HAS BEEN AWARDED TO JOY/WESTERN PRECIPITATION DIVISION. THE SULFUR DIOXIDE SCRUBBING REAGENT IS LIMESTONE. THE CONSULTING ENGINEERING AND CONSTRUCTION FIRM IS BECHTEL.
I.D. NUMBER 103 SALT RIVER PROJECT CORONADO NO.3 350 MW - NEW COAL 1.0 PERCENT SULFUR(MAY) NOT SELECTED LIMESTONE SCRUBBING STARTUP 0/87	THIS NEW UNIT WILL BURN LOW SULFUR WESTERN COAL. 80 PERCENT OF THE GAS WILL BE SCRUBBED TO MEET SULFUR DIOXIDE EMISSION REGULATIONS. THE UTILITY IS CURRENTLY CONSIDERING THE INSTALLATION OF TWO HORIZONTAL CROSSFLOW SCRUBBING MODULES EMPLOYING A LIMESTONE SCRUBBING SOLUTION TO REMOVE SO2 FROM THE FLUE GAS. SCHEDULED COMMERCIAL OPERATION DATE IS 1987. PLANS FOR AN EMISSION CONTROL SYSTEM HAVE NOT BEEN FINALIZED.
I.D. NUMBER 104 SOUTH CAROLINA PUBLIC SERVICE WINYAH NO. 2 280 MW - NEW COAL 1.0 PERCENT SULFUR BABCOCK & WILCOX LIMESTONE SCRUBBING STARTUP 5/77	THIS NEW COAL-FIRED POWER BOILER WILL FIRE 1.0 PERCENT SULFUR COAL. PRIMARY PARTICULATE CONTROL WILL BE PROVIDED BY A HIGH-EFFICIENCY ESP (99.4 PERCENT). 50 PERCENT OF THE FLUE GAS FROM THIS 280-MW NOMINALLY RATED UNIT WILL BE SCRUBBED TO MEET NSPS. THE CONTRACT FOR THIS WET LIMESTONE SCRUBBING SYSTEM HAS BEEN AWARDED TO BABCOCK AND WILLCOX. THE GUARANTEED SULFUR DIOXIDE REMOVAL EFFICIENCY IS 69 PERCENT. SCRUBBING WASTES WILL BE DISPOSED IN AN ON-SITE UNLINED SLUDGE POND. THE UNIT IS NOW UNDER CONSTRUCTION.
I.D. NUMBER 105 SOUTHERN CALIFORNIA EDISON MOHAVE NO 1B 620 MW - RETROFIT COAL 0.5- 0.8 PERCENT SULFUR NOT SELECTED LIME/LIMESTONE SCRUBBING STARTUP 6/77	THE TOTAL CAPACITY OF BOILER IS 790 MW. EXISTING EXPERIMENTAL FGD MODULE WILL TREAT ONLY 170 MW. FINAL SELECTION OF THE PROCESS HAS BEEN POSTPONED. SEE MOHAVE 1A.

TABLE 2
STATUS OF FGD SYSTEMS DURING 12/76

COMPANY POWER STATION	CURRENT MONTH
I.D. NUMBER 106 SOUTHERN CALIFORNIA EDISON MOHAVE NO. 2 790 MW - RETROFIT COAL 0.5 TO 0.8 % SULFUR NOT SELECTED LIME/LIMESTONE SCRUBBING STARTUP 6/77	A PROTOTYPE 170 MW LIME SCRUBBING SYSTEM (HORIZONTAL MODULE) ON THIS UNIT WAS OPERATED FROM NOVEMBER 1973 UNTIL FEBRUARY 1975. AVAILABILITY FOR THE PERIOD 1/16/74 TO 2/9/75 AVERAGED 73.5%. THIS SYSTEM IS TO BE REINSTALLED AT THE FOUR CORNERS PLANT, OPERATED BY ARIZONA PUBLIC SERVICE.
I.D. NUMBER 107 SOUTHERN ILLINOIS POWER COOP SOUTHERN ILLINOIS POWER PT. 4 184 MW - NEW COAL BABCOCK & WILCOX LIMESTONE SCRUBBING STARTUP 1/78	THE CONTRACT FOR THIS LIMESTONE SCRUBBING SYSTEM HAS BEEN AWARDED TO BABCOCK AND WILCOX. THE FGD SYSTEM WILL CONSIST OF 2 SCRUBBING MODULES, TREATING THE FLUE GAS FROM A COAL-FIRED BOILER, HAVING A NOMINAL DESIGN CAPACITY OF 691,500 ACFM AT 290F. THE DESIGN SO2 REMOVAL EFFICIENCY IS 89.4 PERCENT, BASED UPON AN INLET OF 3,326 PPM OF SO2. THE CONSULTING ENGINEERING FIRM FOR THIS PROJECT IS BURNS & MCDONNELL.
I.D. NUMBER 108 SOUTHERN INDIANA GAS&ELECTRIC A.B. BROWN NO.1 250 MW - NEW COAL 3.75 PERCENT SULFUR FMC CORPORATION DOUBLE ALKALI SCRUBBING STARTUP 4/79	THIS NEW COAL-FIRED POWER-GENERATING UNIT IS PART OF A NEW POWER GENERATING STATION LOCATED IN WEST FRANKLIN,INDIANA. THE UNIT WILL FIRE HIGH SULFUR(3.75 PERCENT) INDIANA COAL AND MUST COMPLY WITH NSPS. THE UNIT'S EMISSION CONTROL SYSTEM WILL CONSIST OF AN ESP FOR PARTICULATE REMOVAL AND AN FGD SYSTEM FOR SULFUR DIOXIDE REMOVAL. THE UTILITY HAS AWARDED A CONTRACT TO THE FMC CORPORATION FOR THE INSTALLATION OF A DOUBLE ALKALI SCRUBBING SYSTEM UTILIZING SODA ASH AND LIME. START-UP IS SCHEDULED FOR 04/79.
I.D. NUMBER 109 SOUTHERN MISSISSIPPI ELECTRIC R.D. MORROW NO.1 180 MW - NEW COAL 1.0 PERCENT SULFUR RILEY STOKER / ENVIRONEERING LIMESTONE SCRUBBING STARTUP 11/77	THIS NEW COAL-FIRED UNIT WILL FIRE 1.0 PERCENT SULFUR COAL. A CONTRACT HAS BEEN AWARDED TO RILEY STOKER/ENVIRONEERING FOR THE INSTALLATION OF A WET LIMESTONE SCRUBBING SYSTEM. PARTICULATES WILL BE CONTROLLED BY A HIGH-EFFICIENCY ESP UPSTREAM OF THE SCRUBBING SYSTEM. DESIGN SULFUR DIOXIDE AND PARTICULATE REMOVAL EFFICIENCIES ARE 85 AND 99.6 PERCENT, RESPECTIVELY. SCRUBBER SLUDGE WILL BE STABILIZED WITH FLYASH AND DISPOSED ON THE PLANT SITE. CONSTRUCTION OF THE SCRUBBING SYSTEM IS NOW IN PROGRESS. ERECTION OF THE ABSORBER TOWERS HAS BEEN COMPLETED.
I.D. NUMBER 110 SOUTHERN MISSISSIPPI ELECTRIC R.D. MORROW NO.2 180 MW - NEW COAL 1.0 PERCENT SULFUR RILEY STOKER / ENVIRONEERING LIMESTONE SCRUBBING STARTUP 6/78	THIS NEW COAL-FIRED UNIT WILL FIRE 1.0 PERCENT SULFUR COAL. A CONTRACT HAS BEEN AWARDED TO RILEY STOKER/ENVIRONEERING FOR THE INSTALLATION OF A WET LIMESTONE SCRUBBING SYSTEM. PARTICULATES WILL BE CONTROLLED BY A HIGH-EFFICIENCY ESP UPSTREAM OF THE SCRUBBING SYSTEM. DESIGN SULFUR DIOXIDE AND PARTICULATE REMOVAL EFFICIENCIES ARE 85 AND 99.6 PERCENT, RESPECTIVELY. SCRUBBER SLUDGE WILL BE STABILIZED WITH FLYASH AND DISPOSED ON THE PLANT SITE. ERECTION OF THE ABSORBER TOWERS IS NOW IN PROGRESS.

TABLE 2
STATUS OF FGD SYSTEMS DURING 12/76

COMPANY POWER STATION	CURRENT MONTH
I.D. NUMBER 111 SPRINGFIELD CITY UTILITIES SOUTHWEST NO. 1 200 MW - NEW COAL 3.5 PERCENT SULFUR UNIVERSAL OIL PRODUCTS LIMESTONE SCRUBBING STARTUP 2/77	THE BOILER AND ELECTROSTATIC PRECIPITATOR ARE NOW OPERATIONAL. THE SCRUBBERS ARE BEING BYPASSED UNTIL CONSTRUCTION IS COMPLETED. THE MAJORITY OF THE CONSTRUCTION ON THE SCRUBBING SYSTEM HAS BEEN COMPLETED. INITIAL OPERATION OF THE SCRUBBING SYSTEM WILL COMMENCE ON FEB 1, 1976. COMMERCIAL OPERATION WILL FOLLOW 60 DAYS LATER. INSTALLATION OF THE SYSTEM HAS BEEN HAMPERED BY SOME WIRING PROBLEMS IN THE SCRUBBING AND SLUDGE TREATMENT EQUIPMENT. PARTICULATES WILL BE CONTROLLED BY A HIGH-EFFICIENCY ESP INSTALLED UPSTREAM OF THE SCRUBBER MODULES.
I.D. NUMBER 112 TENNESSEE VALLEY AUTHORITY SHAWNEE NO.10A 10 MW - RETROFIT COAL 2.9 PERCENT SULFUR UNIVERSAL OIL PRODUCTS LIME/LIMESTONE SCRUBBING STARTUP 4/72	REFER TO BACKGROUND INFORMATION SECTION IN TABLE 3 OF THIS REPORT. THIS TURBULENT CONTACT ABSORBER(TCA) LIME/LIMESTONE SCRUBBING SYSTEM HAS BEEN OPERATIONAL SINCE APRIL 1972. THIS TEST PROGRAM IS FUNDED BY THE EPA. TVA IS THE CONSTRUCTOR AND FACILITY OPERATOR. THE BECHTEL CORP. OF SAN FRANCISCO IS THE MAJOR CONTRACTOR, TEST DIRECTOR, AND REPORT WRITER.
I.D. NUMBER 113 TENNESSEE VALLEY AUTHORITY SHAWNEE NO.10B 10 MW - RETROFIT COAL 2.9 PERCENT SULFUR CHEMICO LIME/LIMESTONE SCRUBBING STARTUP 4/72	REFER TO BACKGROUND INFORMATIION SECTION IN TABLE 3 OF THIS REPORT. THIS VENTURI/SPRAY TOWER LIME/LIMESTONE SCRUBBING SYSTEM HAS BEEN OPERATIONAL SINCE APRIL 1972. THIS TEST PROGRAM IS FUNDED BY THE EPA. TVA IS THE CONSTRUCTOR AND FACILITY OPERATOR. THE BECHTEL CORP. OF SAN FRANCISCO IS THE MAJOR CONTRACTOR,TEST DIRECTOR, AND REPORT WRITER.
I.D. NUMBER 114 TENNESSEE VALLEY AUTHORITY WIDOWS CREEK NO 8 550 MW - RETROFIT COAL 3.7 PERCENT SULFUR TENNESSEE VALLEY AUTHORITY LIMESTONE SCRUBBING STARTUP 3/77	CONTRACTS HAVE BEEN LET ON ALL MAJOR PROCESS EQUIPMENT INCLUDING THE SCRUBBER, MIST ELIMINATOR, PIPING, INSTRUMENTATION, HOT AIR INJECTION SYSTEM AND AIR HEATER FANS. THE ID FANS AND LIMESTONE CRUSHER HAVE BEEN INSTALLED. ALL EQUIPMENT REQUISITIONS HAVE BEEN COMPLETED. INITIAL OPERATION OF THE SCRUBBING SYSTEM IS SCHEDULED FOR MAR.1, 1977. FULL COMMERCIAL OPERATION WILL FOLLOW THREE MONTHS LATER. THE WET SCRUBBING SYSTEM CONSISTS OF FOUR TRAINS. EACH TRAIN INCLUDES A VENTURI SCRUBBER AND GRID TOWER ABSORBER. SLUDGE WILL BE DISPOSED ON THE PLANT SITE.
I.D. NUMBER 115 TEXAS UTILITIES CO. MARTIN LAKE NO. 1 793 MW - NEW COAL 1.0 PERCENT SULFUR RESEARCH COTTRELL LIMESTONE SCRUBBING STARTUP 1/77	THE CONTRACT FOR THIS FGD SYSTEM WAS AWARDED TO RESEARCH-COTTRELL. THIS NEW FACILITY IS NOW UNDER CONSTRUCTION. THE FGD SYSTEM STARTUP DATE IS NOW SCHEDULED FOR JANUARY 1977.

TABLE 2
STATUS OF FGD SYSTEMS DURING 12/76

COMPANY POWER STATION	CURRENT MONTH
I.D. NUMBER 116 TEXAS UTILITIES CO. MARTIN LAKE NO. 2 793 MW - NEW COAL 1.0 PERCENT SULFUR RESEARCH COTTRELL LIMESTONE SCRUBBING STARTUP 10/77	THE CONTRACT FOR THIS FGD SYSTEM WAS AWARDED TO RESEARCH-COTTRELL. THIS NEW FACILITY IS NOW UNDER CONSTRUCTION. THE FGD SYSTEM STARTUP DATE IS NOW SCHEDULED FOR OCTOBER 1977.
I.D. NUMBER 117 TEXAS UTILITIES CO. MARTIN LAKE NO. 3 793 MW - NEW COAL 1.0 PERCENT SULFUR RESEARCH COTTRELL LIMESTONE SCRUBBING STARTUP 12/78	THE CONTRACT FOR THIS FGD SYSTEM HAS BEEN AWARDED TO RESEARCH-COTTRELL. THE BOILER IS NOW BEING ERECTED. START-UP IS SCHEDULED FOR DECEMBER 1978.
I.D. NUMBER 118 TEXAS UTILITIES CO. MARTIN LAKE NO. 4 793 MW - NEW COAL 1.0 PERCENT SULFUR RESEARCH COTTRELL LIMESTONE SCRUBBING STARTUP 12/79	THE CONTRACT FOR THIS FGD SYSTEM HAS BEEN AWARDED TO RESEARCH-COTTRELL. THE BOILER IS NOW BEING ERECTED. START-UP IS SCHEDULED FOR DECEMBER 1978.
I.D. NUMBER 119 TEXAS UTILITIES CO. MONTICELLO NO.3 750 MW - NEW LIGNITE 1.0 PERCENT SULFUR CHEMICO LIMESTONE SCRUBBING STARTUP 10/77	THIS NEW STEAM BOILER WILL FIRE LOW SULFUR (0.8 TO 1.0 PERCENT SULFUR) TEXAS LIGNITE. THE EMISSION CONTROL SYSTEM FOR THIS UNIT CONSISTS OF A HIGH EFFICIENCY ESP UPSTREAM OF LIMESTONE SPRAY TOWERS. THE CONTRACT FOR THIS SCRUBBING SYSTEM HAS BEEN AWARDED TO CHEMICO FOR THE INSTALLATION OF THE SPRAY TOWERS. THE ESP IS A COLD-SIDE UNIT SUPPLIED BY POLLUTION CONTROL-WALTHER. DESIGN PARTICULATE AND SULFUR DIOXIDE REMOVAL EFFICIENCY WILL ENABLE THIS UNIT TO MEET NEW SOURCE PERFORMANCE STANDARDS
I.D. NUMBER 120 UNITED POWER ASSOCIATION COAL CREEK NO. 1 545 MW - NEW LIGNITE - 0.63 PERCENT SULFUR COMBUSTION ENGINEERING LIME SCRUBBING STARTUP 11/78	THE CONTRACT FOR THIS SCRUBBING SYSTEM HAS BEEN AWARDED TO COMBUSTION ENGINEERING FOR THE INSTALLATION OF LIME FGD SYSTEMS ON UNITS NOS.1 AND 2 AT THIS STATION. THE SCRUBBING SYSTEM FOR EACH BOILER WILL CONSIST OF 4 SPAY TOWER ABSOBER MODULES FOR REMOVING SO2 FROM THE FLUE GAS. ELECTROSTATIC PRECIPITATORS WILL BE INSTALLED UPSTREAM OF EACH SCRUBBING SYSTEM. FULL COMMERCIAL START-UP DATES FOR UNITS 1 AND 2 ARE 11/78 AND 11/79 RESPECTIVELY. INITIAL OPERATIONS WILL COMMENCE THE PRECEDING AUGUST FOR EACH UNIT. THE BOILER IS NOW UNDER CONSTRUCTION.

TABLE 2
STATUS OF FGD SYSTEMS DURING 12/76

COMPANY POWER STATION	CURRENT MONTH
I.D. NUMBER 121 UNITED POWER ASSOCIATION COAL CREEK NO. 2 545 MW - NEW LIGNITE - 0.63 PERCENT SULFUR COMBUSTION ENGINEERING LIME SCRUBBING STARTUP 11/79	THE CONTRACT FOR THIS SCRUBBING SYSTEM HAS BEEN AWARDED TO COMBUSTION ENGINEERING FOR THE INSTALLATION OF LIME FGD SYSTEMS ON UNITS NOS.1 AND 2 AT THIS STATION. THE SCRUBBING SYSTEM FOR EACH BOILER WILL CONSIST OF 4 SPAY TOWER ABSOBER MODULES FOR REMOVING SO2 FROM THE FLUE GAS. ELECTROSTATIC PRECIPITATORS WILL BE INSTALLED UPSTREAM OF EACH SCRUBBING SYSTEM. FULL COMMERCIAL START-UP DATES FOR UNITS 1 AND 2 ARE 11/78 AND 11/79 RESPECTIVELY. INITIAL OPERATIONS WILL COMMENCE THE PRECEDING AUGUST FOR E\CH UNIT. FGD CONSTRUCTION IS SCHEDULED TO COMMENCE 04/78.
I.D. NUMBER 122 UTAH POWER & LIGHT CO. EMERY NO.1 400 MW - NEW COAL 0.5 PERCENT SULFUR CHEMICO LIME SCRUBBING STARTUP 6/78	A CONTRACT HAS BEEN AWARDED TO THE CHEMICO AIR POLLUTION DIVISION FOR A PEBBLE LIME WET SCRUBBING SYSTEM ON THIS NEW UNIT. THE SCRUBBING SYSTEM IS DESIGNED TO OPERATE IN AN OPEN WATER LOOP MODE WITH AN SO2 REMOVAL EFFICIENCY OF 80 PERCENT FOR LOW SULFUR UTAH COAL. PRIMARY PARTICULATE CONTROL WILL BE PROVIDED BY AN ESP UPSTREAM OF THE SCRUBBERS. THE SCRUBBER SLUDGE WILL BE STABILIZED WITH FLYASH AND DISPOSED ON THE PLANT SITE. THE A-E DESIGN FIRM FOR THIS PROJECT IS STEARNS-ROGER.
I.D. NUMBER 123 UTAH POWER & LIGHT CO. HUNTINGTON NO.1 415 MW - NEW COAL 0.5 PERCENT SULFUR CHEMICO LIME SCRUBBING STARTUP 6/77	A CONTRACT HAS BEEN AWARDED TO CHEMICO AIR POLLUTION DIVISION FOR A LIME SCRUBBING SYSTEM ON THIS NEW UNIT. MATERIALS ARE NOW ARRIVING AT THE PLANT SITE. SITE PREPARATION AND CONSTRUCTION IS NOW UNDERWAY. THE STATE OF UTAH REGULATIONS REQUIRE THE BEST AVAILABLE AND MOST COST EFFECTIVE TECHNOLOGY FOR SULFUR DIOXIDE REMOVAL. PRIMARY PARTICULATE REMOVAL WILL BE PROVIDED BY AN ESP INSTALLED UPSTREAM OF THE WET SCRUBBING SYSTEM. THE A-E DESIGN FIRM FOR THIS PROJECT IS STEARNS-ROGER.
I.D. NUMBER 124 WISCONSIN POWER & LIGHT CO. COLUMBIA NO. 2 527 MW - NEW COAL 0.8 PERCENT SULFUR NOT SELECTED LIME/LIMESTONE SCRUBBING STARTUP 1/80	THE UTILITY IS NOW REQUESTING/EVALUATING BIDS FOR A NEW COAL-FIRED UNIT CURRENTLY UNDER CONSTRUCTION AT THEIR COLUMBIA STATION LOCATED IN PORTAGE WISCONSIN. START-UP OF THE BOILER IS SCHEDULED FOR MARCH 1978. START-UP OF THE SCRUBBING SYSTEM IS PROJECTED FOR JANUARY 1980. THE UNIT WILL COMPLY WITH STANDARDS DURING THE INTERIM BY BURNING LOW SULFUR BELAIR COAL. THE SCRUBBERS ARE BEING DESIGNED TO TREAT 50 PERCENT OF THE FLUE GAS RESULTING FROM THE COMBUSTION OF LOW SULFUR COLSTRIP COAL. THE REMAINING 50 PERCENT WILL BE BYPASSED FOR REHEAT.

TABLE 3

PERFORMANCE DESCRIPTION FOR OPERATIONAL FGD SYSTEMS

TABLE 3
PERFORMANCE DESCRIPTION FOR OPERATIONAL FGD SYSTEMS 12/76

IDENTIFICATION NO.	7
UTILITY NAME	ARIZONA PUBLIC SERVICE
UNIT NAME	CHOLLA NO 1
UNIT LOCATION	JOSEPH CITY ARIZONA
UNIT RATING	115 MW
FUEL CHARACTERISTICS	COAL 0.44-1 PERCENT SULFUR
FGD VENDOR	RESEARCH COTTRELL
PROCESS	LIMESTONE SCRUBBING
NEW OR RETROFIT	RETROFIT
START UP DATE	10/73
FGD STATUS	OPERATIONAL
EFFICIENCY, PARTICULATES	99.7 PERCENT
SO2	58.5 PERCENT
WATER MAKE UP	OPEN LOOP 1.04 GPM / MW
SLUDGE DISPOSAL	UNSTABILIZED SLUDGE DISPOSED IN UNLINED POND
UNIT COST	$57/KW CAPITAL * 2.2 MILLS/KWH ANNUALIZED
OPERATIONAL EXPERIENCE	REFER TO THE BACKGROUND INFORMATION SECTION IN TABLE 3 OF THIS REPORT. THE FGD SYSTEM CONTAINS TWO SCRUBBING TRAINS FOR THE REMOVAL OF SULFUR DIOXIDE AND PARTICULATES. THE SCRUBBERS HAVE BEEN IN SERVICE SINCE NOV. 1973. THE AVERAGE RELIABILITY INDEX VALVES FOR THE SCRUBBING SYSTEM DURING THE MONTHS OF NOVEMBER AND DECEMBER WERE 97 AND 100 PERCENT, RESPECTIVELY. THE ANNUAL SYSTEM RELIABILITY INDEX FOR THE CHOLLA NO. 1 SCRUBBING UNIT AVERAGED APPROXIMATELY 89 PERCENT FOR 1976 OPERATIONS.

BACKGROUND INFORMATION

ON

THE CHOLLA POWER PLANT

THE CHOLLA POWER STATION, LOCATED NEAR JOSEPH CITY, ARIZONA, HAS ONE 115-MW COAL-FIRED BOILER IN SERVICE AND TWO 250 MW UNITS UNDER CONSTRUCTION. CHOLLA NO. 1 IS A DRY-BOTTOM PULVERIZED-COAL-FIRED UNIT DESIGNED BY COMBUSTION ENGINEERING. THE AVERAGE CHARACTERISTICS OF THE COAL BURNED DURING THE COURSE OF 1975 ARE* HEAT CONTENT OF 10,150 BTU/LB* ASH CONTENT OF 13.45 PERCENT* SULFUR CONTENT OF 0.52 PERCENT* CHLORIDE OF 0.04 PERCENT (MAX.)* AND MOISTURE CONTENT OF 14.77 PERCENT.

THE FGD SYSTEM AT THE CHOLLA PLANT WAS MANUFACTURED BY RESEARCH-COTTRELL AND INSTALLATION WAS COMPLETED ON DECEMBER 3, 1973. THE DESIGN COMBINED SULFUR DIOXIDE REMOVAL EFFICIENCY (FOR BOTH MODULES A AND B) IS 58.5 PERCENT. THE SYSTEM CONSISTS OF TWO PARALLEL TRAINS (MODULES A AND B). EACH TRAIN IS DESIGNED FOR 240,000 ACFM THROUGHPUT AT 276 F, AND HANDLES APPROXIMATELY 50 PERCENT OF THE BOILER'S FLUE GAS LOAD. THE A SIDE CONSISTS OF A VARIABLE THROAT FLOODED DISC SCRUBBER FDS FOLLOWED BY A PACKED TOWER (MUNTERS PACKING). THE B-SIDE IS SIMILAR IN DESIGN. HOWEVER, THE TOWER IS NOT PACKED AND LIMESTONE SLURRY IS NOT CIRCULATED THROUGH IT. EITHER ONE OR BOTH OF THE SCRUBBERS CAN BE BYPASSED. GAS LEAKAGE AROUND EACH TRAIN IS ESTIMATED TO BE ABOUT 4.5 PERCENT OF THE GAS BEING TREATED. THE TOWER PACKING, WHICH IS APPROXIMATELY 2-FEET THICK, IS CONSTRUCTED OF POLYPROPYLENE CORRUGATED SHEETS JOINED TOGETHER IN CRISS-CROSS PATTERNS SIMILAR TO HONEYCOMBS. THE TOWER DEMISTERS ARE ALSO CONSTRUCTED OF POLYPROPYLENE, AND THE REHEATERS ARE SHELL AND TUBE TYPE CONSISTING OF THREE TUBE BUNDLES PER UNIT.

LIMESTONE FOR THE FGD SYSTEM IS PURCHASED IN GROUND FORM SUITABLE FOR SLURRYING. THE MAIN SOURCE OF SUPPLY IS THE SUPERIOR CO. LOCATED NEAR PHOENIX, ARIZONA. THIS GRADE OF LIMESTONE IS GENERALLY KNOWN AS *RED WALL* LIMESTONE AND IS CONSIDERED A VERY HIGH QUALITY GRADE. CHEMICAL SPECIFICATIONS ARE* MINIMUM CALCIUM OXIDE CONTENT, 52 PERCENT* MINIMUM CALCIUM CARBONATE CONTENT, 95 PERCENT* MAXIMUM MAGNESIUM OXIDE CONTENT, 2 PERCENT* MAXIMUM MAGNESIUM CARBONATE CONTENT, 0.5 PERCENT* MAXIMUM SILICA CONTENT, 1 PERCENT.

THE PLANT HAS NO SLUDGE TREATMENT OR FIXATION SYSTEMS. THE SLUDGE IS PUMPED TO THE FLY ASH POND ON AN INTERMITTENT BASIS THROUGH A COMMON PIPING SYSTEM WITH THE FLY ASH. NO POND WATER IS RECYCLED TO THE FGD SYSTEM (SOLAR EVAPORATION POND). A GENERAL PROCESS FLOW DIAGRAM OF THE CHOLLA FGD SYSTEM IS PRESENTED IN FIGURE 1, APPENDIX C.

CHOLLA POWER PLANT (CONTINUED)

PROBLEMS AND SOLUTIONS

DECEMBER, 1973 TO APRIL 2, 1974 - BECAUSE OF A DIFFERENCE IN SIZE OF THE MAIN DUCT AND THE REHEATER TRANSITION DUCT, THE GAS FLOW PRODUCED HARMONIC VIBRATIONS IN THE REHEATER. THE VIBRATIONS WERE PARTIALLY DAMPED BY INSTALLATION OF BAFFLES. ONE OF THE REHEATER TUBE BUNDLES WAS BADLY CORRODED BY ACID THAT CONDENSED IN THE UNINSULATED DUCT UPSTREAM OF THE REHEATERS. THE TUBE BUNDLE WAS REPLACED, AND A BAFFLE WAS INSTALLED TO DIVERT CONDENSED ACID FROM REHEATER TUBES. ALSO, THE DUCT UPSTREAM OF THE REHEATER WAS INSULATED. THE ACID CONDENSATION OCCURRED ONLY IN THE MODULE WITH NO TOWER PACKING AND HENCE LOW SULFUR DIOXIDE REMOVAL EFFICIENCY.

ANOTHER PROBLEM RESULTED BECAUSE OF SOLIDS BUILDUP IN THE FDS STUFFING GLAND BOX AND ON TOP OF THE SPRAY DOME. ALSO, SOME LINES PLUGGED, PARTICULARLY WHEN THE SYSTEM OPERATED AT LOW FLOW RATES. SOLIDS SETTLED OUT IN STANDBY PUMPS, AND EXCESSIVE FAN VIBRATIONS OCCURRED BECAUSE OF ACCUMULATION OF SCALE BUILDUP WHEN THE UNIT WAS IDLE. TO SOLVE THESE PROBLEMS, PACKING GLAND POSITION WAS REVERSED (INSTALLED UPSIDE DOWN), THE FAN WAS SANDBLASTED, THE PIPING WAS MODIFIED TO ELIMINATE STAGNANT POCKETS, AND PUMPS WERE FLUSHED IMMEDIATELY AFTER REMOVAL FROM SERVICE.

OPERATION OF THE SYSTEM THROUGHOUT 1975 AND 1976 RESULTED IN THE DEVELOPMENT OF SOME ADDITIONAL PROBLEM AREAS, INCLUDING* SIGNIFICANT CORROSION ATTACK IN THE VESSEL WALLS OF THE FLOODED-DISC PARTICULATE SCRUBBER MODULE* ACID CORROSION IN THE B-SIDE REHEATER HOUSING* SCALE BUILDUP IN THE PIPE OUTLET AT THE SLUDGE/FLY ASH EVAPORATION POND* PLUGGING IN THE SCRUBBER TOWER PACKING AND MIST ELIMINATOR* EROSION IN THE PUMPS* CORROSION IN THE BOILER EXHAUST ELBOW OF THE DUCTWORK LEADING FROM THE SCRUBBERS TO THE STACK.

FGD SYSTEM RELIABILITY

CHOLLA UNIT NO. 1

MONTH	RELIABILITY (%) MODULE A	MODULE B	COMMENTS
JAN. 74	97	90	
FEB. 74	100	94	
MAR. 74	100	66	
APR. 74	66	57	
MAY 74	98	99	
JUN. 74	100	100	
JUL. 74	97	92	
AUG. 74	97	97	
SEP. 74	95	99	
OCT. 74	83	68	ANNUAL BOILER AND FGD SYSTEM OVERHAUL.
NOV. 74	100	98	
DEC. 74	100	100	
JAN. 75	98	99	
FEB. 75	96	99	
MAR. 75			
APR. 75	88	65	
MAY 75	48	40	MODULES WERE BOTH OFF-LINE FOR MOST OF MONTH FOR SCHEDULED REPAIRS AND CLEANING.
JUN. 75	100	100	SUBSTANTIAL PLUGGING OF PACKING AND MIST ELIMINATORS WAS OBSERVED. NO PROBLEM REPORTED.
JUL. 75	97	98	MODULES WERE SHUT DOWN TO CLEAN FLOW RESTRICTIONS IN FLOODED-DISC RECIRCULATION LINES.
AUG. 75	95	100	MODULE A WAS DOWN FOR INSPECTION ONE TIME.

FGD SYSTEM RELIABILITY

CHOLLA UNIT NO. 1 (CONTINUED)

MONTH	RELIABILITY (%) MODULE A	MODULE B	COMMENTS
SEP. 75	98	97	MINOR OUTAGE DUE TO FLOODED-DISC LINES.
OCT. 75	84	55	OUTAGES RESULTED FROM SCHEDULED EQUIPMENT OVERHAULS AND RECOATING OF VESSELS.
NOV. 75	100	80	NO MAJOR OUTAGES OR PROBLEMS OCCURRED DURING THE REPORT PERIOD. MINOR PROBLEMS
DEC. 75	100	100	DURING INCLUDED THE REBUILDING OF A RECYCLE PUMP AND MALFUNCTIONING OF THE B-SIDE REHEATER COIL.
JAN. 76	99	99	MODULE A OPERATED 715 HOURS DURING THE REPORT MONTH, AND MODULE B OPERATED 654 HOURS. MODULE A EXPERIENCED SOME MINOR VALVE AND LINE PLUGGING. MODULE B OPERATING HOURS WERE LOWER BECAUSE OF REDUCED SYSTEM REQUIREMENTS.
FEB. 76			
MAR. 76			
APR. 76	99	98	THE UNIT IS CURRENTLY EXPERIENCING COATING FAILURES IN THE ELBOW OF THE SCRUBBER EXHAUST DUCT. ALSO, THE UTILITY PERFORMED SOME MINOR REPAIRS TO THE HOUSING OF THE B-SIDE REHEATER.
MAY 76	76	100	DURING THE MONTH THE A-SIDE EXPERIENCED SOME CORROSION AND PLUGGING PROBLEMS IN THE REHEATER TUBES. IN ADDITION TO PLUGGED FDS LINES, PACKING AND DEMISTERS, THE UTILITY ALSO REPORTED NORMAL HEAVY PUMP MAINTENANCE.
JUN. 76	64	39	LOW RELIABILITY FACTORS FOR THE MONTH OF JUNE RESULTED FROM A SCHEDULED MID-YEAR SCRUBBER SHUTDOWN FOR MAINTENANCE, INSPECTION AND REPAIRS. SOME SCALING AND CORROSION PROBLEMS WERE UNCOVERED IN THE SYSTEM'S RECYCLE TANKS.

FGD SYSTEM RELIABILITY

CHOLLA UNIT NO. 1 (CONTINUED)

MONTH	RELIABILITY (%) MODULE A	MODULE B	COMMENTS
JUL. 76	100	98	DURING THE JULY-AUGUST PERIOD THE UTILITY REPORTED THAT REPAIRS TO THE COATING IN THE ELBOW OF THE SCRUBBER EXHAUST DUCT WERE COMPLETED. A MALFUNCTIONING SELENOID VALVE IN THE DEMISTER WASH SYSTEM OF THE B-SIDE TRAIN PREVENTING INADEQUATE WASHING OF THE DEMISTER, RESULTED IN A MINOR SCRUBBER OUTAGE. THE BOILER WAS IN SERVICE THE
AUG. 76	100	100	
SEP. 76	100	100	THE ENTIRE MONTH. THE A-SIDE WAS IN SERVICE 720 HR., THE B-SIDE 676 HOURS. NO SIGNIFICANT PROBLEMS WERE REPORTED.
OCT. 76	56	56	THE BOILER WAS IN SERVICE 417 HOURS DURING THE MONTH. A-SIDE AND B-SIDE OPERATIONAL HOURS WERE 415 AND 277 RESPECTIVELY.
NOV. 76	96	98	DURING THE MONTH THE BOILER A-SIDE AND B-SIDE TRAINS WERE IN SERVICE 720, 682 AND 556 HOURS, RESPECTIVELY. TWO MINOR FORCED SCRUBBER OUTAGES OCCURRED DURING THE PERIOD BECAUSE A REHEATER STEAM LEAK AND INLET GAS DAMPER ADJUSTMENTS TO BOTH THE A-SIDE AND B-SIDE SCRUBBING TRAINS.
DEC. 76	98	100	BOILER, A-SIDE, AND B-SIDE OPERATION HOURS FOR THE MONTH WERE 744, 742 AND 498 HOURS, RESPECTIVELY. ONE OUTAGE WAS REPORTED BECAUSE OF AN ADDITIONAL ADJUSTMENT TO THE A-SIDE GAS INLET DAMPER.

TABLE 3
PERFORMANCE DESCRIPTION FOR OPERATIONAL FGD SYSTEMS 12/76

IDENTIFICATION NO.	10
UTILITY NAME	ARIZONA PUBLIC SERVICE
UNIT NAME	FOUR CORNERS NO. 5A
UNIT LOCATION	FARMINGTON NEW MEXICO
UNIT RATING	160 MW
FUEL CHARACTERISTICS	COAL 0.7 PERCENT SULFUR
FGD VENDOR	SO. CALIFORNIA EDISON
PROCESS	LIME SCRUBBING
NEW OR RETROFIT	RETROFIT
START UP DATE	2/76
FGD STATUS	OPERATIONAL
EFFICIENCY, PARTICULATES	
SO2	
WATER MAKE UP	
SLUDGE DISPOSAL	
UNIT COST	
OPERATIONAL EXPERIENCE	REFER TO THE BACKGROUND INFORMATION SECTION IN TABLE 3 OF THIS REPORT. PENDING THE OUTCOME OF TESTS WHICH HAVE JUST BEEN COMPLETED ON THE MOVED FROM THE MOHAVE TEST SITE AND REASSEMBLED AT THE FOUR CORNERS STATION OF ARIZONA PUBLIC SERVICE. THE EXPERIMENTAL MODULE IS DESIGNED TO TREAT APPROXIMATELY 20 PERCENT OF THE FLUE GAS FLOW FROM UNIT NO. 5 WHICH HAS A NET GENERATING CAPACITY OF 755-MW. THE SO2 TEST PROGRAM COMMENCED FEB. 1976 AND WAS COMPLETED ON DEC. 6, 1976. UPON CONCLUSION OF THE PROGRAM, THE MODULE WAS DISASSEMBLED. RESULTS WILL BE PUBLISHED

BACKGROUND INFORMATION

ON

FOUR CORNERS NO. 5A - EXPERIMENTAL HORIZONTAL SCRUBBER

THE FOUR CORNERS POWER STATION, LOCATED NEAR FARMINGTON, NEW MEXICO, IS JOINTLY OWNED BY THE ARIZONA PUBLIC SERVICE COMPANY AND THE SOUTHERN CALIFORNIA EDISON COMPANY. THIS STATION CONTAINS FIVE COAL-FIRED BOILERS WITH AN EQUIVALENT ELECTRIC POWER GENERATING CAPACITY OF 2233-MW. ONLY UNIT NO. 5 IS RETROFITTED WITH AN FGD SYSTEM.

UNIT NO. 5 IS A COAL-FIRED BOILER CAPABLE OF GENERATING 5,446,000 LBS. OF STEAM, WHICH IS EQUIVALENT TO 800-MW OF NET ELECTRICAL POWER. THIS UNIT WAS FIRST PLACED IN COMMERCIAL OPERATION JULY 1970. APPROXIMATELY 20 PERCENT OF THE FLUE GAS GENERATED BY THIS BOILER IS BEING SCRUBBED INITIALLY IN ORDER TO ESTABLISH WHAT SULFUR DIOXIDE AND PARTICULATE REMOVAL EFFICIENCIES CAN BE OBTAINED.

THE FGD SYSTEM WHICH HAS BEEN RETROFITTED ON UNIT NO. 5 IS THE WEIR HORIZONTAL CROSSFLOW SPRAY SCRUBBER WHICH WAS FORMERLY INSTALLED AND OPERATED IN A TEST PROGRAM AT THE MOHAVE GENERATING STATION OF THE SOUTHERN CALIFORNIA EDISON COMPANY(SEE MOHAVE NO. 2A IN APPENDIX A OF THIS REPORT).

DURING THE MOHAVE TEST PROGRAM THE HORIZONTAL MODULE WAS OPERATIONAL FROM NOVEMBER 1, 1973, TO JANUARY 16,1974, FOR SHAKEDOWN PURPOSES. OVER THE COURSE OF THE ACTUAL TEST PROGRAM, WHICH EXTENDED FROM JANUARY 16, 1974, TO FEBRUARY 9, 1975, THE PROTOTYPE UNIT OPERATED A TOTAL OF 5,927 HOURS IN VARIOUS TEST MODES. FOLLOWING COMPLETION OF TESTS, THE MODULE WAS SHUT DOWN, DISMANTLED, TRANSPORTED, AND REASSEMBLED AT THE FOUR CORNERS GENERATING STATION OF ARIZONA PUBLIC SERVICE FOR FURTHER TESTING.

THE HORIZONTAL MODULE IS A FOUR-STAGE SCRUBBING CHAMBER WITH THE FOLLOWING DIMENSIONS* LENGTH - 48 FEET* WIDTH - 28 FEET* HEIGHT - 15 FEET. THE MODULE ITSELF IS A HOLLOW CHAMBER CONSISTING OF FOUR STAGES OF CROSSFLOW SPRAY NOZZLES. EACH STAGE CONTAINS A ROW OF 36 EXTERNALLY-MOUNTED NOZZLES. THE SLURRY IS CYCLED THROUGH THE SCRUBBER IN A COUNTERCURRENT MANNER AT A RATE OF 36,000 GPM/STAGE. FRESH LIME SLURRY IS SPRAYED ACROSS THE FLUE GAS AT THE FOURTH STAGE, WHICH IS THE DISCHARGE END OF THE SCRUBBING CHAMBER. THE SCRUBBING SOLUTION IS THEN COLLECTED AND RECYCLED SUCCESSIVELY TO THE THIRD,SECOND,AND FIRST STAGES OF THE SCRUBBING MODULE. THIS ALLOWS FOR COMPLETE DEPLETION OF ANY EXCESS ALKALINITY AND INSURES THAT FRESH SLURRY IS CONTACTING GAS HAVING THE LOWEST SUFLUR DIOXIDE CONCENTRATION. THE LIQUID RECIRCULATION RATE CAN BE ADJUSTED OVER A WIDE RANGE. THE MODULE IS DESIGNED TO TREAT A MAXIMUM FLUE GAS CAPACITY OF 450,000 SCFM. THE DESIGN GAS VELOCITY THROUGH THE MODULE IS 21.6 FT./SEC. THE CLEANED GASES THEN PASS THROUGH A DEMISTER AND ARE REHEATED BEFORE BEING DISCHARGED TO THE STACK. THE SPENT SLURRY IS DISCHARGED FROM THE

SCRUBBING SYSTEM TO A THICKENER AND THE UNDERFLOW IS PUMPED TO AN ON-SITE SETTLING POND. WATER IS RETURNED TO THE PROCESS FOR FURTHER USE.

A CUTAWAY VIEW OF THE WEIR SCRUBBING CHAMBER IS PRESENTED IN FIGURE 2 OF APPENDIX C.

FOUR CORNERS NO. 5A

PERIOD MONTH/YEAR	OPERATING HOURS BOILER	FGD SYSTEM	COMMENTS
FEB. 76			INSTALLATION OF THE MODULE AT THE FOUR CORNERS GENERATING STATION WAS
MAR. 76			COMPLETED AND THE MODULE WAS PLACED IN-SERVICE FEBRUARY 17, 1976,
			FOR INITIAL OPERATION.
APR. 76			THE SYSTEM WAS TAKEN DOWN IN MID-APRIL FOR A SCHEDULED BOILER OVERHAUL,
MAY 76			SYSTEM RESTART IS SCHEDULED FOR JULY 1976.
JUN. 75			
JUL. 76			THE SYSTEM HAS REMAINED OUT OF SERVICE SINCE MID-APRIL 1976 BECAUSE OF AN
AUG. 76			EXTENSIVE OVERHAUL TO THE NO. 5 BOILER PLUS THE DEVELOPMENT OF PROBLEMS
SEP. 76			WITH THE SCRUBBER MODULE'S REHEATER UNIT.
OCT. 76			
NOV. 76			THE PROTOTYPE WAS IN SERVICE THROUGHOUT THE MONTH OF NOVEMBER. ON DEC.6 THE TEST
DEC. 76			PROGRAM WAS CONCLUDED AND THE UNIT HAS SINCE BEEN DISMANTLED. APS IS NOW IN THE
			PROCESS OF ANALYZING THE OPERATING DATA ACCUMULATED DURING THE TEST PERIOD. A
			REPORT ADDRESSING THE RESULTS OF THE PROGRAM WILL BE PUBLISHED IN FEBRUARY 1977.

TABLE 3
PERFORMANCE DESCRIPTION FOR OPERATIONAL FGD SYSTEMS 12/76

IDENTIFICATION NO.	19
UTILITY NAME	CENTRAL ILLINOIS LIGHT CO.
UNIT NAME	DUCK CREEK NO. 1A
UNIT LOCATION	CANTON ILLINOIS
UNIT RATING	100 MW
FUEL CHARACTERISTICS	COAL 2.5 - 3.0 PERCENT SULFUR
FGD VENDOR	RILEY STOKER / ENVIRONEERING
PROCESS	LIMESTONE SCRUBBING
NEW OR RETROFIT	NEW
START UP DATE	9/76
FGD STATUS	OPERATIONAL
EFFICIENCY, PARTICULATES	99.8 PERCENT
SO2	75 PERCENT
WATER MAKE UP	CLOSED LOOP
SLUDGE DISPOSAL	UNSTABILIZED SLUDGE DISPOSED IN LINED POND
UNIT COST	$80/KW CAPITAL (ESTIMATED)
OPERATIONAL EXPERIENCE	THE INSTALLATION OF THIS SINGLE 100-MW SCRUBBER MODULE WAS COMPLETED IN JULY AND START-UP OPERATIONS FOLLOWED. DEBUGGING OPERATIONS HAVE BEEN PROCEEDING ON AN INTERMITTENT BASIS BECAUSE OF CONSTRUCTION-RELATED PROBLEMS. THE SYSTEM WAS SHUTDOWN FOR A SHORT PERIOD OF TIME TO CORRECT THESE PROBLEMS. RE-START COMMENCED ON SEPTEMBER 9. OPERATION OF THE MODULE DURING THE PERIOD FOLLOWING START-UP HAS BEEN INTERMITTENT BECAUSE OF MECHANICAL AND CHEMICAL-RELATED PROBLEMS. THIS HAS PROMPTED THE UTILITY TO SHUTDOWN THE MODULE UNTIL FULL-SCALE START-UP DATE OF 8/78.

TABLE 3
PERFORMANCE DESCRIPTION FOR OPERATIONAL FGD SYSTEMS 12/76

IDENTIFICATION NO.	31
UTILITY NAME	COMMONWEALTH EDISON
UNIT NAME	WILL COUNTY NO 1
UNIT LOCATION	ROMEOVILLE ILLINOIS
UNIT RATING	167 MW
FUEL CHARACTERISTICS	COAL 4.0 PERCENT SULFUR
FGD VENDOR	BABCOCK & WILCOX
PROCESS	LIMESTONE SCRUBBING
NEW OR RETROFIT	RETROFIT
START UP DATE	2/72
FGD STATUS	OPERATIONAL
EFFICIENCY, PARTICULATES	98 PERCENT
SO2	82 PERCENT
WATER MAKE UP	OPEN LOOP
SLUDGE DISPOSAL	STABILIZED SLUDGE DISPOSED IN HAULAWAY TO LANDFILL
UNIT COST	$113/KW CAPITAL + 13 MILLS PERKWH OPERATING
OPERATIONAL EXPERIENCE	REFER TO THE BACKGROUND INFORMATION SECTION IN TABLE 3 OF THIS REPORT. THIS FULL SCALE DEMONSTRATION SCRUBBING SYSTEM HAS BEEN IN SERVICE SINCE FEBRUARY 1972. THE FGD SYSTEM INCLUDES TWO SCRUBBING TRAINS FOR THE CONTROL OF PARTICULATES AND SULFUR DIOXIDE. MODULE AVAILABILITY, OPERABILITY, RELIABILITY, AND UTILIZATION INDEX VALUES FOR THE PERIOD ARE POSTED IN TABLE THREE. THE BOILER FIRED BOTH LOW SULFUR WESTERN COAL AND HIGH SULFUR ILLINOIS COAL DURING SEPARATE MONTHS. THE FIXATION AND HAULAWAY OF SCRUBBER WASTES CONTINUED DURING THE PERIOD.

BACKGROUND INFORMATION

ON

WILL COUNTY NO. 1

IN 1970, COMMONWEALTH EDISON CONTRACTED WITH THE BECHTEL CORPORATION TO INVESTIGATE THE SULFUR REMOVAL SYSTEMS THEN AVAILABLE HAVING A SUFFICIENT DEGREE OF DEVELOPMENT TO WARRANT LARGE-SCALE INSTALLATION ON WILL COUNTY STATION'S UNIT NO. 1. AFTER DECIDING ON A WET SCRUBBER SYSTEM USING LIME OR LIMESTONE, BECHTEL PREPARED A SPECIFICATION AND RELEASED IT FOR BID. FROM NINE BIDDERS THAT WERE SOLICITED, SEVEN PROPOSALS WERE RECEIVED. AFTER DETAILED STUDY AND BID EVALUATION WITH SPECIAL CONSIDERATION OF THE PROJECT SCHEDULE, BABCOCK AND WILCOX WAS AUTHORIZED IN SEPTEMBER 1970 TO BEGIN DETAILED ENGINEERING FOR A LIMESTONE SLURRY SYSTEM. COMPLETION DEADLINE FOR THE PROJECT WAS DECEMBER 31, 1971, A DEADLINE ESTABLISHED BY THE ILLINOIS COMMERCE COMMISSION AS PART OF A RATE CASE.

THE BABCOCK AND WILCOX PROCESS WAS GUARANTEED TO REMOVE 98 PERCENT OF THE FLY ASH AND 76 PERCENT OF THE SULFUR DIOXIDE. THESE EFFICIENCIES WERE BASED ON A DUST INLET LOADING OF 1.355 GRAINS PER STANDARD CUBIC FOOT AT 70 F AND ON BURNING OF ILLINOIS COAL CONTAINING 4 PERCENT SULFUR.

THE WILL COUNTY POWER STATION IS LOCATED NEAR ROMEOVILLE, ILLINOIS. THE PLANT HAS FOUR ELECTRIC POWER GENERATING UNITS WITH A TOTAL RATED CAPACITY OF 1147 MW. ONLY UNIT NO. 1 IS RETROFITTED WITH AN FGD SYSTEM.

UNIT NO. 1 IS A WET-BOTTOM COAL-FIRED BOILER PRODUCING 167 MW OF ELECTRICITY. THE BOILER WAS MANUFACTURED BY BABCOCK AND WILCOX AND WAS INSTALLED IN 1955. THE PLANT NOW BURNS A LOW-SULFUR (1.3 PERCENT) WESTERN COAL AND A HIGH-SULFUR (4.0 PERCENT) ILLINOIS COAL.

THE WET LIMESTONE FGD SYSTEM AT WILL COUNTY WAS PLACED IN SERVICE ON FEBRUARY 23, 1972. THE SYSTEM CONSISTS OF TWO FGD MODULES (IDENTIFIED AS A AND B), LIMESTONE HANDLING AND MILLING FACILITIES, AND A SLUDGE TREATEMENT AND STABILIZATION UNIT. A PROCESS FLOW DIAGRAM OF THE FGD SYSTEM IS GIVEN IN FIGURE 4 IN APPENDIX C. SULFUR DIOXIDE REMOVAL EFFICIENCY HAS BEEN MEASURED AT 82 PERCENT. SHORTLY AFTER STARTUP AND DURING INITIAL SHAKEDOWN, NUMEROUS PROBLEMS WERE ENCOUNTERED. COMMONWEALTH EDISON SHUT DOWN MODULE B IN MAY 1973 TO CONCENTRATE ON SOLVING THE PROBLEMS OF MODULE A. MODULE B WAS NOT RESTARTED UNTIL MAY 1975.

THE LIMESTONE GRINDING FACILITIES CONSIST OF TWO WET BALL MILLS, EACH RATED AT 12 TONS PER HOUR OF LIMESTONE. THE LIMESTONE IS 97.5 PERCENT CALCIUM CARBONATE, AND CONTAINS 0.99 PERCENT MAGNESIUM CARBONATE AND 0.48 PERCENT SILICA. IT IS RECEIVED IN COARSE-GROUND FORM (ABOUT 1/2 INCH OR LESS) AND IS FINELY GROUND TO 95 PERCENT THROUGH 320 MESH.

SLUDGE FROM THE SYSTEM IS SENT TO A CLARIFIER. THE OVERFLOW IS RETURNED TO THE PROCESS** THE UNDERFLOW IS STABILIZED BY MIXING IT WITH LIME AND FLY ASH. APPROXIMATELY 200 POUNDS OF LIME AND 400 POUNDS OF FLY ASH ARE USED PER TON OF DRY SOLIDS OF SLUDGE. THE STABILIZED SLUDGE IS STABILIZED IN AND TRANSPORTED BY CONCRETE MIXING TRUCKS FOR ULTIMATE DISPOSAL IN AN OFF-SITE DISPOSAL AREA.

PROBLEMS AND SOLUTIONS

1972 - DEMISTER PLUGGING WAS A CONSTANT PROBLEM,MAINLY BECAUSE OF HEAVY LIMESTONE ACCUMULATIONS ON THE BOTTOM OF THE DEMISTER AND PARTLY BECAUSE OF LOW WASHWATER PRESSURE CAUSED BY LEAKS IN THE POND RETURN BYPASS. BECAUSE OF THESE PROBLEMS MODULES A AND B WERE OUT OF SERVICE FOR SEVERAL DAYS EACH MONTH DURING MARCH, APRIL, JUNE, AND JULY 1972. THE MODULES WERE ALSO OUT OF SERVICE FROM SEPTEMBER 26 TO NOVEMBER 21, 1972, BECAUSE THE BOILER WAS DOWN.

IN ORDER TO SOLVE THE DEMISTER PROBLEM, THE SLURRY NOZZLES WERE LOWERED AND THE SLURRY CIRCULATION SYSTEM WAS LEFT OUT OF SERVICE TO KEEP THE DEMISTER CLEAN. SINCE THE SITUATION DID NOT IMPROVE, THE DEMISTER ELEMENTS WERE HAND-WASHED. THIS SOLVED THE PROBLEM PARTIALLY, BUT CAUSED DIFFICULTY WITH THE VENTURI NOZZLES BECAUSE BROKEN ELEMENTS FROM THE DEMISTER GOT INTO THE SLURRY SYSTEM.

AT HIGH GAS FLOW RATES, THE REHEATER OF MODULE B VIBRATED EXCESSIVELY. THEREFORE, MODULE B WAS TAKEN OUT OF SERVICE IN APRIL TO ALLOW REHEATER MODIFICATIONS, WHICH INCLUDED REBRACING OF THE REHEATER TUBES AND INSTALLATION OF A BAFFLE PLATE TO REDUCE THE VIBRATIONS.

OTHER REASONS FOR OUTAGES WERE EROSION AND PLUGGING OF SPRAY NOZZLES, INTERNAL AND EXTERNAL BUILDUP OF DEPOSITS ON VENTURI NOZZLES, CORROSION, SULFITE BLINDING PROBLEMS, AND FAN VIBRATIONS.

1973 - DEMISTER PLUGGING CONTINUED. FURTHERMORE, THE DEMISTER ON MODULE B BROKE LOOSE FROM ITS MOUNTINGS AND THE RESULTANT CARRYOVER OF WASH-WATER PLUGGED THE REHEATER. THIS REHEATER ALSO LEAKED BECAUSE OF CHLORIDE PITTING CORROSION. MODULE A WAS DOWN FROM APRIL 24 TO MAY 24, 1973, AND MODULE B WAS DOWN FROM APRIL TO DATE. THERE WAS NO SCRUBBER OPERATION FROM AUGUST 27 TO SEPTEMBER 26, 1973.

IN EFFORTS TO SOLVE THE DEMISTER AND REHEATER PROBLEMS,A CONSTANT UNDERSPRAY AND INTERMITTENT OVERSPRAY WERE USED TO WASH ALL THE DEMISTER COMPARTMENTS OF MODULE A. EXTRA NOZZLES WERE ADDED AND A CLEAN WATER SUPPLY WAS MAINTAINED. THE REHEATER UNIT WAS ALSO RETUBED.

1974 - ONLY MODULE A OPERATED DURING 1974. THE MAIN PROBLEMS WERE FREEZING OF THE VENTURI THROAT DRIVE MECHANISM, TANK SCREEN BLINDING, DUCT CORROSION, AND VIBRATIONS. LOSS OF BUILDING HEAT CAUSED EXTENSIVE DAMAGE AND KEPT THE SYSTEM DOWN FOR THE ENTIRE

WILL COUNTY (CONTINUED)

MONTH OF JANUARY 1974.

1975 - ENTERING 1975 MODULE A WAS OPERATIONAL AND MODULE B WAS STILL UNDERGOING MODIFICATION. IN THE FIRST QUARTER OF 1975 THERE WERE EIGHT A-MODULE OUTAGES* ONLY ONE WAS A FORCED OUTAGE, DUE TO THE SPLITTING OF A SLURRY VENTURI SUPPLY HOSE. MOBULE B WAS RETURNED TO SERVICE ON MAY 20, 1975. THE UTILITY DECIDED TO OPERATE THE SCRUBBER ON ILLINOIS HIGH-SULFUR COAL. WHEN THIS OPERATION BEGAN, A MULTITUDE OF PROBLEMS OCCURRED* LOWER PARTICULATE REMOVAL EFFICIENCIES, HIGH SLURRY CARRYOVERS, DEMISTER PLUGGING, REHEATER COIL FOULING AND LEAKS. MODULE A WAS TAKEN OUT OF SERVICE IN MID-JUNE FOR THE REMAINDER OF 1975. BY MID-SEPTEMBER 1975 MODULE B WAS TAKEN OUT OF SERVICE OWING TO MASSIVE SCALING IN THE ABSORBER SYSTEM. FINALLY, UNIT NO. 1 WAS SHUT DOWN FOR OVERHAUL OF THE BOILER, TURBINE, AND SCRUBBER IN MID-OCTOBER* THIS OUTAGE LASTED MORE THAN 4 MONTHS.

PERFORMANCE FACTORS FOR EACH MODULE AND THE CORRESPONDING COMMENTS FOR THE REPORT PERIOD ARE PRESENTED IN THE FOLLOWING TABLE

FGD SYSTEM OPERABILITY

WILL COUNTY UNIT NO. 1

PERIOD MONTH/YEAR	OPERABILITY (%) MODULE A	MODULE B	COMMENTS
MAR. 72	0	35	MODULE A DOWN FOR REPAIR AND MODIFICATION OF DEMISTER WASH PIPING ASSEMBLY. MODULE B WAS REMOVED FROM SERVICE EVERY 2 OR 3 DAYS TO HAND-WASH THE DEMISTER. OTHER PROBLEMS WERE VIBRATION OF REHEATER TUBE BUNDLE, RAPID EROSION OF SCRUBBER SPRAY NOZZLES, PLUGGING OF VENTURI NOZZLES.
APR. 72	34	14	MODULE A OUT OF SERVICE FOR 6 DAYS BECAUSE OF NEAR-RUPTURE OF A VENTURI PIPE EXPANSION JOINT. HEAVY BUILDUP OF SOLIDS ON DEMISTER. MODULE B OUT OF SERVICE MOST OF THE TIME FOR SIMILAR REPAIR OF VENTURI PIPE EXPANSION JOINT, AND FOR MODIFICATION OF REHEATER UNIT AND DEMISTER WASH SYSTEM.
MAY 72	70	32	A TWO WEEK OUTAGE OF MODULE B TO REBRACE THE REHEATER UNIT, TO INSTALL UNDERSPRAY NOZZLES ON DEMISTER, AND TO INSTALL HEAVIER SCREENS IN THE SUMP. REHEATER PLUGGING CAUSED ADDITIONAL OUTAGES.
JUN. 72	8	31	BOTH MODULES WERE OUT OF SERVICE OWING TO HIGH DIFFERENTIAL PRESSURE ACROSS THE DEMISTERS. LEAKAGE OF POND RETURN BYPASS VALVE CAUSED DEMISTER PLUGGING. ALSO DURING THIS PERIOD, THE RUBBER LINING OF SCRUBBER A WAS REPAIRED.
JUL. 72			
AUG. 72	79	21	PLUGGING OF VENTURI NOZZLES AND DEMISTER CAUSED SHUTDOWN OF MODULE A FOR 2 DAYS FOR REPAIRS. MODULE B WAS OUT OF SERVICE FOR 22 DAYS FOR CLEANING OF THE DEMISTER AND REHEATER UNIT, INSTALLATION OF OVERHEAD SPRAY NOZZLES, AND REPLACEMENT OF SECTIONS OF THE DEMISTER. THE BOILER WAS DOWN FOR TWODAYS FOR REPAIR OF THE GENERATOR.
SEP. 72	0	30	BOILER DOWN SEPT. 1-5 BECAUSE OF NO DEMAND. I.D. FAN PROBLEM CAUSED UNSTABLE OPERATION OF THE BOILER MOST OF THE MONTH. MODULE A WAS DOWN FOR MODIFICATION OF REHEATER UNIT AND REPAIR OF RECIRCULATION TANK SCREENS.
OCT. 72	0	0	BOILER AND SCRUBBERS WERE DOWN. PRINCIPAL MODIFICATIONS INCLUDED INSTALLATION OF REHEATER BAFFLE PLATES TO DAMPEN VIBRATIONS AND INSTALLATION OF AN EXPERIMENTAL

PERIOD MONTH/YEAR	OPERABILITY (%) MODULE A	MODULE B	COMMENTS
			DEMISTER WASH SYSTEM.
NOV. 72	0	0	BOILER PROBLEMS CAUSING UNSTABLE OPERATION KEPT BOTH MODULES DOWN DURING THIS MONTH.
DEC. 72	22	30	MODULES OPERATED INTERMITTENTLY BECAUSE OF ELECTROSTATIC PRECIPITATOR TESTING AND MISCELLANEOUS INSTRUMENT PROBLEMS.
JAN. 73	0	0	BOTH MODULES WERE DOWN FOR REPAIRS AND MODIFICATIONS.
FEB. 73	22	24	MODULES WERE OUT OF SERVICE BECAUSE OF CRACKS IN THE INLET DUCTWORK OF THE BOOSTER FAN. INPROPER INSTALLATION OF DEMISTER CAUSED PLUGGING OF MODULE B REHEATER UNIT.
MAR. 73	65	11	MODULE A WAS OUT OF SERVICE FOR 5 DAYS BECAUSE OF DEMISTER PLUGGING. BOILER WAS DOWN FOR 4 DAYS OF INSPECTION. MODULE B WAS DOWN BECAUSE OF LEAKS FROM REHEATER TUBES.
APR. 73	6	13	PERSISTING PROBLEMS WITH DEMISTER AND DEPOSITS OF CALCIUM SULFATE SCALE ON REHEATER TUBES OF MODULE A.
MAY 73	0	0	BOTH MODULES WERE OUT OF SERVICE DURING THIS MONTH.
JUN. 73	16	0	MODULE B WAS KEPT DOWN TO ALLOW CONCENTRATION ON THE PROBLEMS WITH MODULE A. BOILER-RELATED PROBLEMS WERE RESPONSIBLE FOR MOST OF THE OUTAGES OF MODULE A.
JUL. 73	51	0	MODULE A PROBLEMS* REHEATER TUBES LEAKS AND HIGH FAN VIBRATIONS.
AUG. 73	19	0	MORE REHEATER TUBE LEAKS ON MODULE A ATTRIBUTED TO CHLORIDE CORROSION ATTACK.
SEP. 73	0	0	MODULES WERE DOWN. DURING THIS MONTH, CHICAGO FLY ASH CO. FINISHED CLEANING AND TREATING THE NORTHEAST HALF OF THE SLUDGE POND.
OCT. 73	32	0	MODULE A TRIPPED SEVERAL TIMES BECAUSE OF BAD LIMIT SWITCHES IN THE BYPASS AND BLOCK DAMPERS. UNIT WAS ALSO TAKEN DOWN TO BALANCE THE BOOSTER I.D. FAN.
NOV. 73	51	0	ROUTINE INSPECTION OF MODULE A REVEALED SOME PLUGGING. MODULE WAS KEPT DOWN FOR CLEANING AND SOME MODIFICATION. POOR GAS DISTRIBUTION IN MODULE SUSPECTED TO CONTRIBUTE TO DEMISTER PROBLEMS.
DEC. 73	0	0	MODULES WERE DOWN. THE MONTH WAS DEVOTED TO MODIFICATION AND MAINTENANCE, MOSTLY OF

WILL COUNTY UNIT NO. 1 (CONTINUED)

PERIOD MONTH/YEAR	OPERABILITY (%) MODULE A	MODULE B	COMMENTS
			DEMISTER, VENTURI THROATS, PUMPS, AND ISOLATION VALVES.
JAN. 74	0	0	MODULES WERE DOWN OWING TO FREEZING IN THE 10-INCH-DIAMETER, 4400-FT. LINE BETWEEN MODULES AND POND. SOME DAMAGE TO SUMP PUMPS. FREEZING ALSO DAMAGED SOME INSTRUMENTS
FEB. 74	0	0	THE FROZEN PIPELINE WAS THAWED, REANCHORED, AND RETURNED TO SERVICE. THE INSTRUMENTS DAMAGED BY FREEZING WERE REPAIRED. MODULE A KEPT DOWN UNTIL ARRIVAL OF SECOND-STAGE DEMISTER.
MAR. 74	21	0	MODULE A WAS READY FOR SERVICE MARCH 20 BUT WAS NOT RETURNED TO SERVICE TILL MARCH 27 BECAUSE BOILER WAS DOWN.
APR. 74	72	0	MODULE A CONTINUED TO OPERATE UNTIL APRIL 19(EXCEPT FOR TWO SHORT INSPECTION OUTAGES) FOR 23 CONSECUTIVE DAYS. OPERATION WAS ON LOW-SULFUR COAL. SUMP SCREEN FROM MODULE B WAS SUBSTITUTED FOR DAMAGED SCREEN IN MODULE A.
MAY 74	93	0	MODULE A OPERATED FOR ENTIRE MONTH EXCEPT FOR SHORT OUTAGES FOR INSPECTION. MUCH OF THIS OPERATION WAS ON HIGH-SULFUR COAL.
JUN. 74	55	0	MODULE A OPERATED FOR ABOUT 300 HOURS. THE SYSTEM WAS OFF FOR 2 WEEKS FOR REPAIR OF VENTURI THROAT DRIVE
JUL. 74	96	0	MODULE A OPERATED FOR THE WHOLE MONTH EXCEPT FOR ONE INSPECTION OUTAGE AND TWO BOILER SHUTDOWNS. MODULE B REMAINS DOWN UNTIL SATISFACTORY OPERATION OF MODULE A IS ACHIEVED.
AUG. 74	91	0	MODULE A WAS DOWN SIX TIMES THIS MONTH* THREE TIMES BECAUSE OF NO BOILER DEMAND, TWICE FOR REPAIR OF LEAKS IN STEAM PIPING, AND ONCE FOR BALANCING OF A FAN.
SEP. 74	85	0	MODULE A WAS OFF THREE TIMES* ONCE FOR CLEANING OF DEPOSITS FROM THE VENTURI THROAT, ONCE FOR REPAIR OF A DESUPERHEATER LEAK, AND ONCE BECAUSE BOILER WAS DOWN.
OCT. 74	94	0	MODULE A WAS DOWN FOUR TIMES* ONCE BECAUSE OF BOILER OUTAGES, ONCE FOR INSPECTION, AND TWICE FOR REPAIR OF REHEATER LEAKS.

WILL COUNTY UNIT NO. 1 (CONTINUED)

PERIOD MONTH/YEAR	OPERABILITY (%) MODULE A	MODULE B	COMMENTS
NOV. 74	97	0	MODULE A WAS OUT OF SERVICE THREE TIMES* TWICE BECAUSE OF NO DEMAND AND ONCE FOR INSPECTION.
DEC. 74	99	0	MODULE A WAS DOWN TWICE* ONCE FOR INSPECTION AND ONCE FOR REPAIR OF VALVE IN SPENT-LIQUOR LINE TO POND.
JAN. 75	99	0	MODULE A WAS DOWN TWICE* ONCE FOR INSPECTION AND ONCE FOR NO DEMAND. MODIFICATION OF MODULE B IS CONTINUING.
FEB. 75	99	0	MODULE A WAS OUT OF SERVICE TWICE* ONCE FOR INSPECTION AND ONCE FOR NO DEMAND. ONE SMALL REHEATER LEAK IN A STAINLESS STEEL BUNDLE WAS BLANKED-OFF ON-LINE. DURING THE INSPECTION, DEMISTER UNDERWASH NOZZLES WERE CLEANED AND A SMALL SECTION OF DEMISTER WAS REPLACED. INSPECTION SHOWED THAT CONDITIONS INSIDE THE SCRUBBER WERE ABOUT THE SAME AS BEFORE. COAL BURNED THIS MONTH AVERAGED LESS THAN 1% SULFUR. MODIFICATION OF MODULE B IS CONTINUING. CHICAGO FLY ASH IS TREATING MATERIAL FROM THE SCRUBBER WITH PORTLAND CEMENT AND FLY ASH AND DUMPING THE TREATED MATERIAL INTO THE NORTH HALF OF THE HOLDING BASIN.

WILL COUNTY UNIT NO. 1 (CONTINUED)

PERIOD MONTH/YEAR	MODULE	SYSTEM PERFORMANCE FACTORS (%) AVAILABILITY	OPERABILITY	RELIABILITY	UTILIZATION	COMMENTS
MAR. 75	A	94	99	93	81	MODULE A WAS DOWN FOUR TIMES* TWICE FOR NO DEMAND, ONCE FOR A VENTURI HOSELEAK,ONCE FOR AN ACCIDENTAL 50-MINUTE TRIP. THE SYSTEM OPERATED ON LOW SULFUR COAL DURING THE MONTH. MODIFICATIONS TO MODULE B ARE CONTINUING.
APR. 75	A	37	40	36	35	SLUDGE POND WAS OVERBURDENED BY NEAR-CONTINUOUS OPERATION OF MODULE A. THE FGD SYSTEM WAS SHUT DOWN TO ALLOW EVAPORATION OF WATER FROM THE POND. DURING SHUT DOWN, THE FOLLOWING MODIFICATIONS WERE MADE* PUMP GLAND WATER FLOWS WERE REDUCED FROM 10 TO 5 GPM*FILTER BACKWASH WAS ROUTED OUT OF SYSTEM* CONTINUOUS DEMISTER UNDERSPRAY WAS CHANGED TO INTERMITTENT. RECLAIM COAL WAS BURNED IN THE BOILER DURING THE MONTH.
MAY 75	A	84	84	84	84	MODULE A REMAINED OUT OF SERVICE UNTIL MAY 5, WHEN IT WAS DETERMINED THAT THERE WAS ENOUGH FREEBOARD IN THE POND TO START OPERATING. THERE WERE TWO MOVE OUTAGES* ONE FOR 45 MINUTES, THE RESULT OF A DAMPER TRIP* THE OTHER FOR CLEANING OF UNDERSPRAY NOZZLES. MODULE B WAS PLACED IN SERVICE AT TEN A.M., MAY 20, FOR THE FIPST TIME SINCE NOON ON APRIL 13, 1973. AFTER BRIEF STARTUP, WHICH WAS ROUTINE, OPERATION WAS DELAYED UNTIL THE 20TH BECAUSE OF TWO BROKEN OIL PUMPS ON THE RECIRCU-
	B	37	37	37	37	

PERIOD MONTH/YEAR	MODULE	SYSTEM PERFORMANCE FACTORS (%) AVAILABILITY	OPERABILITY	RELIABILITY	UTILIZATION	COMMENTS
						LATION TANK MIXERS. SINCE THE STARTUP, MODULE B HAS BEEN OUT OF SERVICE TWICE* ONCE FOR A VENTURI PUMP TRIP, AND ONCE FOR A RECIRCULATION TANK LEVEL TRIP. THE TOTAL OUTAGE TIME WAS ONLY 1 HOUR, 40 MINUTES. RECLAIM COAL OF VARYING SULFUR CONTENT WAS AGAIN BURNED IN THE BOILER. THE SCRUBBER SLUDGE WAS STABILIZED WITH LIME AND FLY ASH AND STORED IN THE HOLDING BASIN.
JUN. 75	A	64	61	60	54	MODULE A SUSTAINED FIVE OUTAGES DURING THE MONTH. THE MODULE IS PRESENTLY OUT OF SERVICE TO ALLOW INSTALLATION OF NEW DEMISTERS AND REHEATER. MODULE B WAS OUT OF SERVICE EIGHT TIMES. LONGEST OUTAGE WAS 95 HOURS FOR CLEANING OF BOOSTER FAN AND DEMISTER. BOOSTER FAN VIBRATIONS CAUSED A SHUTDOWN ON JUNE 30. A HIGH SULFUR COAL TEST BURN HAS CONDUCTED FOR APPROXIMATELY 2 WEEKS. LOW SULFUR WESTERN COAL WAS BURNED IN THE UNIT FOR THE REMAINDER OF THE MONTH.
	B	85	85	84	75	
JUL. 75	B	79	79	77	74	MODULE A CANNOT BE RETURNED TO SERVICE UNTIL THE NEW REHEATER, ORDERED IN APRIL, IS RECEIVED AND INSTALLED. MODULE B SUSTAINED FOUR OUTAGES, ONCE FOR NO DEMAND. REHEATER FAILURES AT 1,000 HOURS SEEM TO BE CAUSED BY VIBRATION FATIGUE. ONE MINOR STEAM HEADER LEAK ALSO OCCURRED. LOW

WILL COUNTY UNIT NO. 1 (CONTINUED)

PERIOD MONTH/YEAR	MODULE	SYSTEM PERFORMANCE FACTORS (%) AVAILABILITY	OPERABILITY	RELIABILITY	UTILIZATION	COMMENTS
						SULFUR COAL WAS BURNED DURING THE FIRST (3) WEEKS AND HIGH SULFUR ILLINOIS COAL WAS BURNED DURING TH THE LAST WEEK OF THE MONTH.
AUG. 75	B	94	100	92	76	MODULE A REMAINED OUT OF SERVICE ALL MONTH. MODULE B WAS SHUT DOWN SEVEN TIMES DURING THE MONTH, FOUR OF WHICH WERE DUE TO *NO DEMAND.* HIGH SULFUR PILE COAL WAS BURNED IN THE UNIT DURING THE MONTH, RESULTING IN A SUBSTANTIAL INCREASE IN SLUDGE PRODUCTION AND FORCING A 6-DAY, 10 HR/DAY, SLUDGE DISPOSAL OPERATION. SLUDGE STABILIZATION IS CONTINUING.
SEP. 75	B	63	63	63	63	MODULE A REMAINED OUT OF SERVICE ALL MONTH BECAUSE OF DELAY ON THE NEW REHEATER ORDER. MODULE B WAS DOWN THREE TIMES BECAUSE OF MASSIVE ABSORBER SCALE DEMISTER AND I.D. BOOSTER FAN CLEANING, BALANCING I.D. BOOSTER FAN, AND PLUGGING OF ABSORBER PUMP SCREEN. TOTAL OUTAGE TIME WAS 238 HOURS, 40 MINUTES FOR CLEANOUT AND FAN BALANCING. HIGH SULFUR COAL WAS BURNED IN THE BOILER WHEN THE SCRUBBER WAS IN THE GAS PATH.
OUT. 75	B	32	100	28	26	ON OCTOBER 11, OVERHAUL BEGAN ON THE WILL COUNTY UNIT NO. 1 BOILER, TURBINE,AND SCRUBBER. MODULE B EXPERIENCED TWO MINOR OUTAGES DURING THE 11-DAY PERIOD PRIOR TO THE OVERHAUL. MODULE A REMAINED

WILL COUNTY UNIT NO. 1 (CONTINUED)

PERIOD MONTH/YEAR	MODULE	SYSTEM PERFORMANCE FACTORS (%) AVAILABILITY	OPERABILITY	RELIABILITY	UTILIZATION	COMMENTS
						OUT OF SERVICE PENDING DELIVERY OF THE NEW RE-HEATER
NOV. 75		TURBINE, BOILER, AND SCRUBBER OVERHAUL				THE SCHEDULED OVERHAUL OF THE BOILER, TURBINE, AND SCRUBBER MODULES CONTINUED. MAJOR MAINTENANCE AREAS INCLUDED MODULE REHEATERS, POND RETURN PUMP, VENTURI SPRAY NOZZLES, VENTURI AND ABSORBER MODULES, PUMP VALVES, AND SUMPS.
DEC. 75		TURBINE, BOILER AND SCRUBBER OVERHAUL				MODULE B REHEATER WAS RETURNED FROM MANUFACTURER AFTER REPAIRS AND REVISIONS. SCRUBBER REHEATERS COULD BE INSTALLED AND OPERATING BY THE END OF JANUARY.
JAN. 76		TURBINE, BOILER AND SCRUBBER OVERHAUL				THE UNIT REMAINED OUT OF SERVICE FOR COMPLETION OF THE BOILER, TURBINE, AND SCRUBBER OVERHAUL THAT BEGAN ON OCTOBER 11, 1975. SYSTEM RESTART IS NOW SCHEDULED FOR MID-MARCH 1976.
FEB. 76		TURBINE, BOILER AND SCRUBBER OVERHAUL				
MAR. 76	A	30	45	21	19	UNIT NO. 1 RETURNED TO SERVICE IN MARCH FOLLOWING THE EXTENDED MAJOR BOILER, TURBINE AND SCRUBBER OVERHAUL. THE A-SIDE WAS PUT INTO THE GAS PATH ON MARCH 22 AND REMAINED AVAILABLE FOR SERVICE THE REST OF THE MONTH. THE B-SIDE REMAINED OUT OF SERVICE UNTIL MARCH 29 BECAUSE OF DELAYS IN THE INSTALLATION OF A REPAIRED REHEATER. HIGH SULFUR ILLINOIS WAS BURNED IN THE BOILER DURING THE MONTH
	B	9	20	8	8	

WILL COUNTY UNIT NO. 1 (CONTINUED)

PERIOD MONTH/YEAR	MODULE	SYSTEM PERFORMANCE FACTORS (%) AVAILABILITY	OPERABILITY	RELIABILITY	UTILIZATION	COMMENTS
APR. 76	A	23	20	20	19	DURING THE MONTH OF APRIL THE A-SIDE INCURRED PUMP LINER FAILURES WHEN AN ISOLATION VALVE BROKE AND FELL INTO THE VENTURI RECYCLE PUMP. B-SIDE OUTAGES DURING THE MONTH RESULTED FROM REHEATER TUBEBUNDLE LEAKS* PLUGGED ABSORBER TANK SCREEN* AND VENTURI PUMP LINER FAILURE. HIGH SULFUR COAL (3.5 PERCENT SULFUR) WAS BURNED IN THE BOILER THROUGHOUT THE MONTH. IN ADDITION, THE UTILITY INITIATED A TESTING AND EVALUATION PROGRAM DURING THE MONTH. THIS PROGRAM IS DESIGNED TO PROVIDE DATA AND INFORMATION CONCERNING CHEMISTRY AND RELATED OPERATING CHARACTERISTICS.
	B	51	49	49	47	
	A & B*		20		19	
MAY 76	B	87	85	85	76	THE A-SIDE WAS DOWN THE ENTIRE MONTH AWAITING A PARTS SHIPMENT (VENTURI PUMP LINERS). MODULE B ENCOUNTERED FOUR FORCED SCRUBBER OUTAGES. THREE OF THESE OUTAGES WERE MECHANICAL PROBLEMS, DUE TO A VENTURI HOSE LEAK, PLUGGED ABSORBER TANK SCREEN, AND A FOULED I.D. BOOSTER FAN. HIGH SULFUR ILLINOIS COAL WAS BURNED IN THE BOILER DURING THE MONTH. THE SLUDGE WAS STABILIZED WITH LIME AND FLY ASH AND HAULED TO AN OFF-SITE DISPOSAL AREA.

WILL COUNTY UNIT NO. 1 (CONTINUED)

PERIOD MONTH/YEAR	MODULE	SYSTEM PERFORMANCE FACTORS (%) AVAILABILITY	OPERABILITY	RELIABILITY	UTILIZATION	COMMENTS
JUN. 76	A	50	44	42	36	SIDE-A WAS RETURNED TO SERVICE JUNE 9 FOLLOWING
	B	83	85	81	70	THE INSTALLATION OF A NEW VENTURI PUMP LINER.
	A & B*		37		31	FOUR FORCED SCRUBBER OUTAGES WERE REPORTED- TWO BECAUSE OF NO DEMAND, ONE FOR A BYPASS-DAMPER FAILURE AND ONE FOR I.D. BOOSTER FAN FOULING. THE B-SIDE ENCOUNTERED SEVERAL FORCED SCRUBBER OUTAGE - TWO DUE TO NO DEMAND AND SEVERAL SHORT TRIPS BECAUSE OF SCALING AND PLUGGING IN THE VENTURI TANK SCREEN. HIGH SULFUR ILLINOIS COAL WAS BURNED IN THE BOILER DURING THE MONTH. SLUDGE FIXATION AND HAULAWAY TO A DISPOSAL SITE CONTINUED.
JUL. 76	A	20	0	0	0	THE A-SIDE REMAINED OUT OF SERVICE THE ENTIRE
	B	86	90	84	72	MONTH BECAUSE OF REPAIRS TO A DAMAGED ABSORBER PUMP AND POND THICKENER SLUDGE OVERLOADING. THE B-SIDE ENCOUNTERED FOUR FORCED SCRUBBER OUTAGES* TWICE FOR NO DEMAND, ONCE TO BALANCE THE I.D. BOOSTER FANS, AND ONCE TO WASH THE I.D. BOOSTER FANS.
AUG. 76	A	98	57	96	38	THE A-SIDE REMAINED OUT OF SERVICE 50 PERCENT OF
	B	65	61	54	41	OF THE TIME DURING THE MONTH TO AVOID POND
	A & B*		17		11	THICKENER OVERLOADING. FOUR SCRUBBER OUTAGES WERE REPORTED* ONE BECAUSE OF NO DEMAND AND THREE BECAUSE OF MINOR PROBLEMS. THE B-SIDE ENCOUNTERED

PERIOD MONTH/YEAR	MODULE	SYSTEM PERFORMANCE FACTORS (%) AVAILABILITY	OPERABILITY	RELIABILITY	UTILIZATION	COMMENTS
						THREE NO-DEMAND OUTAGES, TWO BECAUSE OF LOSS OF CHEMICAL CONTROL, ONCE FOR FOULING AND ONCE FOR SPENT SLURRY VALVE REPAIRS. EXPERIMENTATION WITH THE SYSTEM'S PROCESS CHEMISTRY, BY LOWERING THE PH SET POINT FROM 5.4 TO 5.1, WAS CONDUCTED BY THE UTILITY DURING THIS PERIOD. THIS VARIATION IN OPERATION WAS BELIEVED TO HAVE CAUSED THE MASSIVE GYPSUM SCALING IN BOTH MODULES WHICH OCCURRED DURING THE PERIOD. THE PH SET POINT WAS RETURNED BACK TO THE 5.4 VALUE. HIGH SULFUR ILLINOIS COAL WAS BURNED IN THE BOILER DURING THE MONTH. SLUDGE STABILIZATION PRACTICES CONTINUED.
SEP. 76	A	42	29	28	42	FIVE OUTAGE PERIODS WERE REPORTED DURING THE MONTH FOR THE A-SIDE, THREE OF WHICH RESULTED FROM FORCED SCRUBBER OUTAGES. PROBLEMS WERE REPORTED WITH LOW FLOW TRIPS IN THE VENTURI, NOZZLE FOULING CLEANING AND INSPECTION OF THE RECIRCULATION TANK, PUMPS AND VALVES, AND A PUMP MOTOR FAILURE. THE B-SIDE ENCOUNTERED FOUR FORCED SCRUBBER OUTAGES* TWO BECAUSE OF SPENT SLURRY VALVE TROUBLE, ONE LOW VENTURI FLOW TRIP AND ONCE BECAUSE OF LOSS OF CHEMICAL CONTROL. HIGH SULFUR ILLINOIS COAL BURNING WAS CONTINUED IN THE BOILER DURING THE MONTH.
	B	79	76	74	60	
	A & B*		5		4	

WILL COUNTY UNIT NO. 1 (CONTINUED)

PERIOD MONTH/YEAR	MODULE	SYSTEM PERFORMANCE FACTORS (%) AVAILABILITY	OPERABILITY	RELIABILITY	UTILIZATION	COMMENTS
OCT. 76	A	30	29	28	28	PROBLEMS RELATED TO THE A-SIDE SCRUBBER WERE DUE PRIMARILY TO REPAIRS NECESSARY TO THE 1A1 RECYCLE PUMP, AND DELAYS IN REPLACEMENT PARTS SHIPMENTS. THE A-SIDE MODULE WAS IN SERVICE WHEN THE B-SIDE WAS DOWN, HOWEVER SCRUBBING LIQUOR FLOW WAS REDUCED BECAUSE ONLY ONE RECYCLE PUMP WAS IN USE. AT THE END OF NOVEMBER, THE REMAINING A-SIDE PUMP WAS TAKEN OUT OF SERVICE FOR OVERHAUL AND REPAIRS. FOLLOWING THIS THE A-SIDE WILL RESUME OPERATIONS ON ONE PUMP. ON THE B-SIDE, 3 FORCED SCRUBBER OUTAGES OCCURRED DURING OCTOBER. ONE WAS BECAUSE OF REPAIRS OF A REHEATER HEADER LEAK AND THE TIE-IN OF A VACUUM FILTER AT THE THICKENER. THE OTHER TWO RESULTED FROM A VENTURI NOZZLE CLEAN-OUT AND A VENTURI LOW-FLOW TRIP. DURING NOVEMBER, 4 SCRUBBER TRIPS OCCURED BECAUSE OF A MILLING SYSTEM FAILURE, VENTURI HEADER LEAK REPAIR AND VENTURI NOZZLE CLEANING, REPLACEMENT OF SPENT SLURRY VALVE, AND CHEMICAL SYSTEM UPSET. TWO OUTAGES WERE ALSO LOGGED BECAUSE OF *NO DEMAND*.
	B	76	56	70	55	
	A & B*	0	0	0	0	
NOV. 76	A	20	26	20	20	
	B	72	70	66	55	
	A & B*		8		7	

*NOTE- A&B DESIGNATION AND THE CORRESPONDING PERFORMANCE VALUES REFER TO THE SIMULTANEOUS OPERATION OF BOTH SCRUBBING TRAINS DURING THE REPORT PERIOD IN QUESTION.

TABLE 3
PERFORMANCE DESCRIPTION FOR OPERATIONAL FGD SYSTEMS 12/76

IDENTIFICATION NO.	32
UTILITY NAME	DETROIT EDISON
UNIT NAME	ST. CLAIR NO 6
UNIT LOCATION	BELLE RIVER MICHIGAN
UNIT RATING	163 MW
FUEL CHARACTERISTICS	COAL 3.7 PERCENT SULFUR
FGD VENDOR	PEABODY ENGINEERING
PROCESS	LIMESTONE SCRUBBING
NEW OR RETROFIT	RETROFIT
START UP DATE	5/76
FGD STATUS	OPERATIONAL
EFFICIENCY, PARTICULATES	99.7 PERCENT
SO2	90 PERCENT
WATER MAKE UP	OPEN LOOP 1.07GPM/MW
SLUDGE DISPOSAL	UNSTABILIZED SLUDGE DISPOSED IN LINED POND
UNIT COST	$92 / KW CAPITAL * 2.4 MILLS/ KWH OPERATING
OPERATIONAL EXPERIENCE	REFER TO THE BACKGROUND INFORMATION SECTION IN TABLE 3 OF THIS REPORT. A 30-DAY VENDOR QUALIFICATION RUN AND A WEEK-LONG FINAL ACCEPTANCE TEST WERE SUCCESSFULLY COMPLETED DURING THE SPRING OF 1976. THE UTILITY IS NOW IN THE PROCESS OF CONDUCTING A MINIMUM TWO-MONTH INTERNAL DEMONSTRATION PROGRAM DURING WHICH THE SCRUBBERS WILL OPERATE IN THE SO2-REMOVAL MODE. THIS PROGRAM IS BEING CONDUCTED PRIMARILY BY PLANT PERSONNEL. FOLLOWING COMPLETION OF THE SO2 PROGRAM, THE VENTURI SCRUBBERS WILL REMAIN IN THE FLUE GAS PATH, OPERATING IN THE PARTICULATE-REMOVAL MODE.

BACKGROUND INFORMATION

ON

ST. CLAIR NO. 6

THE ST. CLAIR POWER PLANT OF THE DETROIT EDISON COMPANY IS LOCATED ON THE ST. CLAIR RIVER IN BELLE RIVER, MICHIGAN, APPROXIMATELY 45 MILES NORTHEAST OF DOWNTOWN DETROIT. THIS PLANT CONTAINS 7 FOSSIL-FUEL-FIRED GENERATING UNITS WHICH HAVE A TOTAL NET GENERATING CAPACITY OF 1775-MW. UNIT NO. 6 IS A COAL-FIRED TWO-STAGE SUPERHEATER UNIT, CONTAINING TWO SEPARATE BOILER BOXES KNOWN AS THE SOUTH BOILER AND THE NORTH BOILER. THE TOTAL NET GENERATING CAPACITY OF THE NO. 6 UNIT IS 325 MW. THE SUPERHEATER WAS MANUFACTURED BY COMBUSTION ENGINEERING AND PLACED IN SERVICE IN 1961. BOTH THE NORTH BOILER AND THE SOUTH BOILER ARE EQUIPPED WITH EMISSION CONTROL SYSTEMS. THE UNIT CURRENTLY OPERATES AT EXCESS AIR RATES OF 115 TO 120 PERCENT.

THE ST.CLAIR NO.6 BOILER FIRES EXCLUSIVELY A LOW SULFUR WESTERN SUBBITUMINOUS COAL ORIGINATING FROM THE DECKER COMPANY'S DIETZ MINE LOCATED IN SOUTHERN MONTANA. THE AVERAGE CHARACTERISTICS OF THIS COAL ARE* HEAT CONTENT 9500 TO 9600 BTU/LB*SULFUR CONTENT OF 0.3 TO 0.4 PERCENT* ASH CONTENT OF 4.0 PERCENT* AND A TOTAL MOISTURE CONTENT OF 22.0 TO 24.0 PERCENT.

THE EMISSION CONTROL SYSTEM INSTALLED ON THE NORTH BOILER CONSISTS OF MECHANICAL COLLECTORS AND AN ELECTROSTATIC PRECIPITATOR (ESP) INSTALLED UPSTREAM OF A WET SCRUBBING SYSTEM. THE MECHANICAL COLLECTORS AND ESP ARE PROVIDED FOR PRIMARY PARTICULATE CONTROL THE WET SCRUBBING SYSTEM PROVIDES ADDITIONAL PARTICULATE REMOVAL AND PRIMARY SULFUR DIOXIDE CONTROL.

THE FLUE GAS DESULFURIZATION (FGD) CONSISTS OF TWO PEABODY-LURGI VENTURI SCRUBBER AND SPRAY TOWER ABSORBER MODULES WITH A TOTAL FLUE GAS CAPACITY OF 493,500 ACFM AT 270 F. THIS VOLUME IS EQUIVALENT TO APPROXIMATELY 50 PERCENT OF THE TOTAL FLUE GAS FROM THE NO. 6 UNIT. THE DESIGN FLOW RATE PER SCRUBBING TRAIN IS 246,700 ACFM AT 270 F. FLUE GAS CAN BE BYPASSED AROUND THE SCRUBBING SYSTEM. 6.6 MW OF ELECTRICAL POWER ARE CONSUMED BY THE SCRUBBING OPERATIONS. THIS FGD SYSTEM IS AN EXPERIMENTAL DEMONSTRATION UNIT DESIGNED AND INSTALLED BY PEABODY ENGINEERED SYSTEMS IN COOPERATION WITH THE DETROIT EDISON COMPANY. EACH SCRUBBING TRAIN WHICH ALSO INCLUDES A CLEAR WATER TRAY AND RADIAL VANE MIST ELIMINATOR, A COMMON RECYCLE TANK, INDUCED DRAFT FAN, OIL-FIRED HOT-AIR-INJECTION REHEAT SYSTEM AND A 10.8-ACRE CLAY-LINED SETTLING POND. DESIGN REMOVAL EFFICIENCY OF THIS EMISSION CONTROL SYSTEM IS 99.7 PERCENT FOR PARTICULATES AND 90 PERCENT FOR SULFUR DIOXIDE BASED UPON HIGH SULFUR EASTERN COAL. A DIAGRAM OF ONE OF THE TWO PARALLEL SCRUBBING TRAINS IS PRESENTED IN FIGURE 5 OF APPENDIX C.

FGD SYSTEM PERFORMANCE

ST. CLAIR NO. 6

PERIOD	COMMENTS
NOV. 74 DEC. 74 JAN. 75 FEB. 75	INSTALLATION OF THE FGD SYSTEM WAS ESSENTIALLY COMPLETED BY THIS TIME. A FAULTY INSTRUMENT PANEL WHICH WAS INCORRECTLY WIRED HAS BEEN RETURNED TO THE MANUFACTURER FOR REPAIR. TO DATE, THE UTILITY HAS WATER TESTED ALL THE AUXILIARY EQUIPMENT. THE I.D. FAN HAS BEEN TESTED AND AIR BALANCE HAS BEEN CHECKED.
MAR. 75 APR. 75 MAY 75	A COLD FLUE GAS RUN WAS SUCCESSFULLY CONDUCTED MARCH 22 TO 23. DURING THIS PERIOD, THE RUBBER-LINED PUMPS WERE REPAIRED AND THE LIMESTONE PREPARATION SYSTEM WAS CALIBRATED.
JUN. 75 JUL. 75	THE FIRST HOT FLUE GAS RUN WAS CONDUCTED ON JUNE 22, 1975. THE RUN LASTED FOR A PERIOD OF 22 HOURS. DURING THIS RUN, THE SCRUBBER WAS PURPOSELY TRIPPED OFF AT LOADS OF 40 AND 80 PERCENT. THIS WAS PERFORMED TO OBSERVE IF ANY DETRIMENTAL EFFECTS TO THE STEAM GENERATION OPERATIONS RESULTED. NONE WERE DETECTED. THE SYSTEM WAS TAKEN OUT OF SERVICE FOLLOWING THIS GAS RUN TO CORRECT THE FOLLOWING MAJOR OPERATION AREAS* GAS CIRCUIT* LURGI THROAT POSITIONAL FAILURE* DETERIORATION OF THE DAMPER SEALS* SEVERE DUCT VIBRATIONS* SO2 ANALYZERS INOPERATIVE. LIQUID CIRCUIT* FAILURE OF PH CONTROL SYSTEM* TARGET FLOW METER TARGETS HAVE BEEN BROKEN OFF* PUMP SEAL WATER LOW FLOW ALARM TRIPS.
AUG. 75	A SECOND HOT FLUE GAS RUN WAS INITIATED ON AUGUST 6 AND LASTED 27 HOURS. THE RUN WAS TERMINATED BECAUSE OF A REHEATER THERMOCOUPLE FAILURE. A SUBSEQUENT INSPECTION OF THE SCRUBBING SYSTEM REVEALED NO APPARENT ABNORMALITIES OR MALFUNCTIONS.
SEP. 75 OCT. 75	A THIRD HOT FLUE GAS RUN OF 41 HOURS DURATIONWAS COMPLETED OCTOBER 9. THE MAIN OBJECTIVE OF THIS RUN WAS TO EVALUATE VARIOUS COMPONENTS OF THE FRESH WATER SPRAY SYSTEM AND EFFECTS ON SYSTEM OPERATION. THE TEST RUN WAS PREMATURELY TERMINATED BECAUSE OF A BOILER FEED PUMP MALFUNCTION, RESULTING IN A REDUCED BOILER LOAD CAUSING SUBSEQUENT WEEPING OF THE WASH TRAY.

PERIOD	COMMENTS
NOV. 75	
DEC. 75	A FOURTH FLUE GAS RUN OF 23 DAYS DURATION WAS TERMINATED DUE TO EXCESSIVE VIBRATION IN THE I.D. BOOSTER FAN. ONE OTHER SCRUBBER-RELATED OUTAGE OCCURRED WHEN THE PACKING OF ONE OF THE SCRUBBER RECIRCULATION PUMPS REQUIRE MAINTENANCE. SO2 REMOVAL DURING THIS PERIOD WAS 90 PERCENT AND PARTICULATE OUTLET LOADING WAS 0.1 LB/1000 LBS OF FLUE GAS FOR 1 TO 3 PERCENT SULFUR COAL.
JAN. 76	
FEB. 76	
MAR. 76	
APR. 76	THE 30-DAY VENDOR QUALIFICATION RUN AND FINAL ACCEPTANCE TESTS WERE COMPLETED BY MAY 29. THE QUALIFICATION
MAY 76	RUN WAS CONDUCTED ON A *HANDS OFF* BASIS USING PLANT PERSONNEL EXCLUSIVELY. THE SYSTEM WAS IN SERVICE 100 PERCENT OF THE TIME THE BOILER WAS OPERATIONAL. THE FINAL ACCEPTANCE TEST CONSISTED OF SIX 4-HR. TEST RUNS CONDUCTED IN THE SPACE OF ONE WEEK. THE SO2 REMOVAL EFFICIENCY FOR HIGH SULFUR COAL WAS 90.9 PERCENT. PARTICULATE REMOVAL ALSO EXCEEDED DESIGN LEVELS. NO MAJOR MECHANICAL OR CHEMICAL-RELATED PROBLEMS WERE ENCOUNTERED.
JUN. 76	
JUL. 76	
AUG. 76	THE UTILITY IS NOW PREPARING TO CONDUCT A 2 MONTH MINIMUM INTERNAL SCRUBBER DEMONSTRATION PROGRAM TO ACQUIRE OPERATING DATA AND INFORMATION. FOLLOWING THE COMPLETION OF THIS PROGRAM THE BOILERS WILL FIRE LOW SULFUR DECKER COAL (0.3 TO 0.4 PERCENT) TO MEET SO2 EMISSION REGULATIONS. THE SCRUBBERS WILL CONTINUE TO OPERATE IN THE PARTICULATE REMOVAL MODE.
SEP. 76	THE INTERNAL SO2 SCRUBBING DEMONSTRATION PROGRAM COMMENCED ON OCTOBER 14. THE SCRUBBERS OPERATED CONTINUOUSLY
OCT. 76	FOR 10 DAYS. OPERATION WAS INTERRUPTED BY A FORCED SCRUBBER OUTAGE RESULTING FROM SCALE AND SOLIDS CARRYOVER FROM THE WASH TRAY AND MIST ELIMINATOR TO THE SCRUBBER I.D. BOOSTER FAN ASSEMBLY, CAUSING VIBRATION AND BALANCE PROBLEMS. THE SCRUBBING SYSTEM WAS TAKEN OUT OF THE GAS PATH THE FAN WAS CLEANED OUT AND REBALANCED. THE UTILITY PLANS TO MODIFY THE COMPONENT'S WASH SYSTEM FOR GREATER FLOW CAPABILITY AFTER COMPLETION

OF THE SO2 SCRUBBING PROGRAM. DECO ALSO PLANS TO CONTINUE PARTICULATE SCRUBBING FOLLOWING THE TERMINATION OF THE SO2 PROGRAM BY UNCOUPLING THE SPRAY TOWERS AND MAINTAINING THE PEABODY-LURGI VENTURI SCRUBBERS IN THE FLUE GAS STREAM. SOME LIMESTONE MAY HAVE TO BE ADDED TO THE PARTICULATE SCRUBBING SOLUTION IN ORDER TO PREVENT LOW PH SWINGS AND MINIMIZE THE POSSIBILITY OF ACID CORROSION DAMAGE TO THE INTERNAL COMPONENTS.

NOV. 76 FOLLOWING THE COMPLETION OF SAND BLASTING OPERATIONS TO SCRUBBER'S I.D. BOOSTER FAN FOR REMOVAL OF SOLIDS BUILD UP, OPERATIONS RESUMED ON NOVEMBER 7 AND CONTINUED THROUGHOUT THE MONTH. THE SYSTEM'S AVAILABILITY INDEX FOR THE MONTH WAS 80 PERCENT. THE MAJORITY OF THE OUTAGE TIME WAS CONSUMED PROCURING SAND BLASTING SERVICES. THE OPERATION ITSELF REQUIRED ONLY 8 HOURS.

DEC. 76 THE SO2 DEMONSTRATION PROGRAM CONTINUED THROUGHOUT DECEMBER. THE SYSTEMS'S AVAILABILITY INDEX FOR THE PERIOD WAS 51 PERCENT. SCRUBBER OUTAGES RESULTED FROM MALFUNCTIONS OF THE LIMESTONE FEEDER, THE DENSE SLURRY TRAVERSE PUMP, THE DENSE SLURRY TANK AGITATORS, AND PLUGGING OF THE PH SAMPLE LINE.

TABLE 3
PERFORMANCE DESCRIPTION FOR OPERATIONAL FGD SYSTEMS 12/76

IDENTIFICATION NO.	33
UTILITY NAME	DUQUESNE LIGHT
UNIT NAME	ELRAMA POWER STATION
UNIT LOCATION	ELRAMA PENNSYLVANIA
UNIT RATING	510 MW
FUEL CHARACTERISTICS	COAL 1.0 - 2.8 PERCENT SULFUR
FGD VENDOR	CHEMICO
PROCESS	LIME SCRUBBING
NEW OR RETROFIT	RETROFIT
START UP DATE	10/75
FGD STATUS	OPERATIONAL
EFFICIENCY, PARTICULATES	
SO2	83 PERCENT FOR 2% SULFUR COAL
WATER MAKE UP	OPEN LOOP
SLUDGE DISPOSAL	STABILIZED SLUDGE DISPOSED IN UNLINED POND
UNIT COST	$93/KW CAPITAL * 6.0 MILLS/KWHOPERATING COSTS(BOTH STATIONS)
OPERATIONAL EXPERIENCE	REFER TO THE BACKGROUND INFORMATION SECTION IN TABLE 3 OF THIS REPORT. THIS SCRUBBING SYSTEM,WHICH CONSISTS OF FIVE SINGLE-STAGE MODULES,WAS INITIALLY PLACED IN SERVICE OCTOBER 26,1975. INITIAL OPERATION PROCEEDED WITH FLUE GAS FROM ONE BOILER BEING TREATED BY FIVE SCRUBBING VESSELS. DURING THE REPORT PERIOD OPERATIONS PROCEEDED WITH TWO BOILERS COUPLED INTO THE 5-MODULE SCRUBBING SYSTEM. ONE SINGLE-STAGE SCRUBBING MODULE OPERATED WITH TWO RUBBER-LINED RECYCLE PUMPS IN SERVICE. THE SCRUBBING WASTES ARE CHEMICALLY FIXATED BY THE IUCS METHOD AND LANDFILLED.

BACKGROUND INFORMATION

ON

ELRAMA POWER STATION

DUQUESNE LIGHT COMPANY, AN INVESTOR-OWNED ELECTRIC UTILITY, SERVES ABOUT ONE-HALF MILLION CUSTOMERS IN SOUTHWESTERN PENNSYLVANIA AND HAS A NET GENERATING CAPABILITY OF APPROXIMATELY 2500 MW. THIS CAPABILITY IS GENERATED BY COMBUSTION TURBINES IN SIMPLE AND COMBINED-CYCLE MODES, BY NUCLEAR PLANTS, AND BY COAL-FIRED POWER STATIONS. THE COMPANY IS SOLE OWNER AND OPERATOR OF THREE COAL-FIRED STATIONS, TWO OF WHICH HAVE BEEN RETROFITTED WITH WET SCRUBBERS USING LIME AS A REAGENT.

THE SCRUBBER FACILITY AT THE 494-MW ELRAMA STATION IS ALMOST IDENTICAL TO THE SYSTEM AT THE PHILLIPS STATION. GIBBS & HILL IS THE ARCHITECT-ENGINEER, AND CHEMICO SCRUBBERS HAVE BEEN INSTALLED WITHIN THE SAME DESIGNATED BATTERY AS AT PHILLIPS. MECHANICAL AND ELECTRICAL DUST-REMOVAL EQUIPMENT REMOVES MOST PARTICULATES FROM THE BOILER EMISSIONS, AND THE GAS TO AND FROM THE SCRUBBERS IS HEADERED IN THE SAME WAY. UNLIKE THE PHILLIPS SYSTEM, HOWEVER, THERE ARE FOUR BOILERS, EACH WITH ITS OWN TURBINE GENERATOR. FIVE SINGLE-STAGE SCRUBBERS WERE INSTALLED, WITH THE INTENTION THAT KNOWLEDGE GAINED FROM THE TEST PROGRAM AT PHILLIPS WOULD BE APPLIED TO ELRAMA TO ENABLE COMPLIANCE WITH EMISSION REGULATIONS.

THE FIRST ELRAMA SCRUBBER WAS PLACED IN SERVICE ON OCTOBER 26, 1975. IT HAD BEEN SCHEDULED FOR AN EARLIER STARTUP DATE, BUT BECAUSE OF THE SEVERITY AND NUMBER OF PROBLEMS ENCOUNTERED AT PHILLIPS, STARTUP WAS DELAYED UNTIL MANY OF THE PROBLEMS AT PHILLIPS WERE RESOLVED AND THE MODIFICATIONS COULD BE INCORPORATED AT BOTH STATIONS.

BOILER NO. 2 WAS INITIALLY CONNECTED TO THE FGD SYSTEM ON OCTOBER 26, 1975. THIS BOILER HAS AN EQUIVALENT CAPACITY OF APPROXIMATELY 100 MW, AND THE EMISSIONS ARE HANDLED BY ONE SCRUBBER. TO ENSURE RELIABILITY IN THE CASE OF A SCRUBBER MALFUNCTION, TWO SCRUBBERS ARE OPERATED AT PARTIAL LOAD TO PROTECT THE BOILER AND TURBINE GENERATOR AGAINST A TRIP-OFF.

THE BOILER OPERATED CONTINUOUSLY ON THE SCRUBBER SYSTEM THROUGH JANUARY 1976. TWO MINOR OUTAGES OCCURRED DURING THIS PERIOD, ONE CAUSED BY INOPERATIVE THROAT DAMPERS AND THE OTHER INVOLVING FAILURE OF A LIME FEEDER BELT.

UNTIL ADDITIONAL CONSTRUCTION IS COMPLETED, TWO BOILERS ARE THE MAXIMUM THAT CAN BE TIED INTO THE SCRUBBING SYSTEM. TO DATE THE UTILITY HAS ENCOUNTERED THE USUAL MINOR STARTUP PROBLEMS AND SOME MAJOR PROBLEMS AS WELL. THE MAJOR PROBLEMS HAVE ENTAILED FROZEN PIPES AND THICKENERS, THE LATTER INVOLVING HARDWARE AND DESIGN ASSOCIATED WITH RECIRCULATION OF THE SLUDGE WITHIN THE THICKENERS TO ATTAIN 30 TO 40 PERCENT SOLIDS CONCENTRATION.

THE SLUDGE BEING GENERATED AT THIS STATION IS TREATED BY THE IUCS METHOD, WHICH EMPLOYS A VACUUM FILTER THAT INCREASES THE SOLIDS IN THE UNDERFLOW TO 50 TO 60 PERCENT, SO THAT LESSER AMOUNTS OF DRY FLY ASH ARE REQUIRED FOR MIXING WITH THE SLUDGE.

ELRAMA POWER STATION

PERIOD	OPERATING HOURS BOILER		SCRUBBER VESSELS		COMMENTS
OCT. 75 TO JAN. 76	1169	1508	976	838	ONE BOILER WAS CONNECTED TO THE SCRUBBER SYSTEM ON OCTOBER 26, 1975. A SECOND BOILER WAS CONNECTED ON FEBRUARY 4, 1976. FOUR OF THE SCRUBBER VESSELS HAVE BEEN IN SERVICE IN VARIOUS COMBINATIONS. THE SERVICE HOURS TO JANUARY 31, 1974 ARE POSTED IN THE ACCOMPANYING TABLE. THE FIFTH VESSEL HAS NOT BEEN IN SERVICE BECAUSE IT IS BEING REVISED FOR TRIAL INSTALLATION OF RUBBER-LINED RECYCLE PUMPS.
FEB. 76					
MAR. 76					THE SYSTEM OPERATED DURING THE REPORT PERIOD WITH 2 BOILERS COUPLED INTO THE SCRUBBING SYSTEM. REVISIONS TO THE FIFTH SCRUBBING VESSEL HAVE BEEN COMPLETED AND OPERATIONS ARE PROCEEDING WITH TWO RUBBER-LINED RECYCLE PUMPS.
APR. 76					
MAY 76					THE SYSTEM IS STILL OPERATING WITH TWO BOILERS COUPLED INTO THE SCRUBBING SYSTEM. THE FIFTH SCRUBBING VESSEL WAS TAKEN OUT OF SERVICE FOR REPAIRS AND MODIFICATIONS REQUIRED FOR THE RUBBER-LINED RECYCLE PUMPS. THE UTILITY IS CURRENTLY CONDUCTING A PERFORMANCE TEST ON THE SCRUBBING SYSTEM IN THE TWO BOILER OPERATION MODE. THE IUCS SLUDGE FIXATION METHOD IS STILL CONTINUING AT THIS FACILITY.
JUN. 76					
JUL. 76					THE FIFTH SCRUBBING VESSEL EMPLOYING TWO RUBBER-LINED RECYCLE PUMPS WAS OPERATIONAL FOR A SHORT PERIOD OF TIME DURING THE REPORTING MONTHS. TWO BOILERS REMAIN COUPLED INTO THE SCRUBBING SYSTEM. THE CONSTRUCTION OF ADDITIONAL EQUIPMENT AT THIS FACILITY IS CONTINUING. ADDITIONAL LIME STORAGE SILOS AND A THICKENER WILL BE REQUIRED FOR FULL SCALE OPERATION. THE UTILITY HAS SIGNED A LETTER OF INTENT WITH IUCS FOR A LONG-TERM SLUDGE FIXATION SYSTEM. HIGH CALCIUM LIME IS STILL BEING EMPLOYED IN THE SCRUBBING SYSTEM.
AUG. 76					
SEP. 76					OPERATIONS AT THIS STATION DURING THE REPORT PERIOD PROCEEDED WITH

PERIOD	BOILER OPERATING HOURS	SCRUBBER VESSELS	COMMENTS
OCT. 76			TWO BOILERS COUPLED INTO THE 5-MODULE SCRUBBING SYSTEM. THE 5TH SCRUBBING VESSEL WAS OPERATIONAL DURING THE REPORT PERIOD WITH THE RUBBER-LINED RECYCLE PUMPS IN SERVICE. TESTS WERE CONDUCTED DURING THE PERIOD TO DETERMINE PARTICULATE AND SO2 REMOVAL EFFICIENCIES. SO2 REMOVAL EFFICIENCY WAS 50 PERCENT. PARTICULATE EMISSIONS WERE BEING REDUCED WELL BELOW THE 0.1 LB/MM BTU STANDARD (ACTUAL RESULTS* 0.04 LB/MM BTU). THESE RESULTS WERE BASED ON 2 BOILERS COUPLED INTO THE 5 SCRUBBING MODULES WHILE BURNING MEDIUM SULFUR (1.0 TO 2.8 PERCENT) COAL. THE MECHANICAL COLLECTORS AND ESP'S WERE IN SERVICE DURING THE TESTS. OPERATIONS ARE STILL PROCEEDING ON AN OPEN-WATER-LOOP BASIS. PART OF THE THICKENER OVERFLOW IS STILL BEING DIVERTED TO THE ASH POND AND NOT RECYCLED BACK TO THE PROCESS. BECAUSE BOTH THE BEAVER VALLEY AND BRUCE MANSFIELD STATIONS ARE FULLY OPERATIONAL, THIS STATION HAS BEEN RELEGATED TO PEAK LOAD OPERATIONS. GENERAL LOAD OPERATIONS ARE FULL LOAD CAPACITY IN THE DAYTIME AND 50 TO 60 PERCENT LOAD REDUCTION AT NIGHT.
NOV. 76			THE SCRUBBER REMAINED IN SERVICE THROUGHOUT THE RPPORT PERIOD WITH TWO BOILERS COUPLED INTO THE SCRUBBING SYSTEM. RECYCLE PUMP EVALUATION IS BEING CONDUCTED BY THE UTILITY AT BOTH THE PHILLIPS AND ELRAMA STATIONS. OBSERVATIONS OF THE RUBBER-LINED RECYCLE PUMPS INDICATE SOME SEVERE ABRASION AND GOUGING HAVE OCCURRED AFTER 1000 HOURS OF SREVICE TIME.
DEC. 76			

TABLE 3
PERFORMANCE DESCRIPTION FOR OPERATIONAL FGD SYSTEMS 12/76

IDENTIFICATION NO.	34
UTILITY NAME	DUQUESNE LIGHT
UNIT NAME	PHILLIPS POWER STATION
UNIT LOCATION	SOUTH HEIGHT PENNSYLVANIA
UNIT RATING	410 MW
FUEL CHARACTERISTICS	COAL 1.0- 2.8 PERCENT SULFUR
FGD VENDOR	CHEMICO
PROCESS	LIME SCRUBBING
NEW OR RETROFIT	RETROFIT
START UP DATE	7/73
FGD STATUS	OPERATIONAL
EFFICIENCY, PARTICULATES	
SO2	83 PERCENT FOR 2% SULFUR COAL
WATER MAKE UP	OPEN LOOP
SLUDGE DISPOSAL	STABILIZED SLUDGE DISPOSED IN UNLINED POND
UNIT COST	$103/KW CAPITAL * 6 MILLS/KWH OPERATING COSTS(BOTH STATIONS)
OPERATIONAL EXPERIENCE	REFER TO THE BACKGROUND INFORMATION SECTION IN TABLE 3 OF THIS REPORT. THIS SCRUBBING SYSTEM HAS BEEN IN SERVICE SINCE JULY 1973. THE UTILITY REPORTED THAT OPERATIONS DURING THE REPORT PERIOD WERE CONDUCTED WITH BOILER NOS. 2 THROUGH 6 COUPLED INTO THE SCRUBBING SYSTEM. BOILER NO.1 REMAINED OUT OF SERVICE FOR OVERHAUL AND REPAIRS. THE IUCS INTERIM SCRUBBER SLUDGE PROCESSING PLANT IS NOW OPERATIONAL AT THE PLANT SITE. THE CHEMICALLY FIXED SLUDGE IS BEING DISPOSED IN AN OFF-SITE LANDFILL AREA.

BACKGROUND INFORMATION

ON

PHILLIPS POWER STATION

THE PHILLIPS POWER STATION IS LOCATED ON THE OHIO RIVER ABOUT 20 MILES NORTHWEST OF PITTSBURGH. THE POWER STATION CONSISTS OF SIX COAL-FIRED BOILERS HAVING A NET GENERATING CAPABILITY OF 307 MW. THE RESULTANT FLUE GASES ARE DISCHARGED TO A COMMON HEADER, TO WHICH THE FGD MODULES ARE CONNECTED THROUGH ISOLATION VALVES. THE BOILERS ARE CURRENTLY BURNING COAL WITH A HEATING VALUE OF 11,350 BTU PER POUND AND SULFUR AND ASH CONTENTS OF 2.2 AND 18.2 PERCENT, RESPECTIVELY.

THE FGD SYSTEM, WHICH SUPPLEMENTS THE EXISTING MECHANICAL AND ELECTROSTATIC DUST COLLECTORS, CONSISTS OF FOUR TRAINS OF WET VENTURI-TYPE SCRUBBERS, INSTALLED AT A COST OF APPROXIMATELY $103/KW. GIBBS & HILL, INC., WAS ENGAGED AS THE A-E FIRM FOR THE ENTIRE PROJECT* BATTERY LIMITS OF THE CHEMICO CORPORATION ARE CONFINED TO THE SCRUBBERS AND ASSOCIATED PUMPS AND CONTROLS BETWEEN THE INLET HOT GAS DUCT MANIFOLD AND THE EXIT WET GAS HEADER (INCLUDING THE REHEATER, EXCLUDING THE NEW ID FANS).

THE FOUR TRAINS ARE LOCATED DOWNSTREAM OF EXISTING MECHANICAL COLLECTORS AND ESP'S INSTALLED IN SERIES ON EACH OF THE SIX PULVERIZED-COAL-FIRED BOILERS. THREE OF THE TRAINS ARE SINGLE-STAGE VENTURI SCRUBBERS ORIGINALLY INTENDED FOR PARTICULATE REMOVAL. THE FOURTH TRAIN IS A DUAL-STAGE VENTURI SCRUBBER-ABSORBER AND IS THE PROTOTYPE FOR DETERMINING THE FEASIBILITY OF TWO-STAGE SCRUBBING FOR COMPLIANCE WITH SULFUR DIOXIDE EMISSION LIMITS. A DIAGRAM OF THE SCRUBBER-ABSORBER TRAIN INSTALLED AT THE PHILLIPS STATION IS PRESENTED IN FIGURE 6 OF APPENDIX C.

EACH TRAIN IS EQUIPPED WITH A NEW WET-TYPE ID FAN. A NEW COMMON DUCT DIRECTS GAS STREAMS FROM AIR BOILERS TO THE SCRUBBER SYSTEM, WHERE THEY CAN BE SENT TO ANY OR ALL OF THE TRAINS. THE SCRUBBED GAS IS EXHAUSTED THROUGH A COMMON DUCT AND AN OIL-FIRED REHEATER TO A NEW GROUND-SUPPORTED STACK, WHICH CONTAINS AN INNER ACID-RESISTANT BRICK STACK.

SLAKED QUICKLIME IS ADDED TO THE LOWER CONE OF EACH OF THE SCRUBBER VESSELS TO NEUTRALIZE THE RECIRCULATING LIQUOR, WHICH, IN SINGLE-STAGE SCRUBBING WITH HIGH-CALCIUM LIME, REACTS WITH APPROXIMATELY 50 PERCENT OF THE SULFUR DIOXIDE IN THE FLUE GAS. A LIQUOR BLEED FLOW OF APPROXIMATELY 4 PERCENT IS SENT TO ONE OR BOTH OF THE THICKENERS FOR REMOVAL OF SOLIDS. THE OVERFLOW IS RETURNED TO THE SYSTEM AND THE UNDERFLOW IS DISCHARGED TO THE IUCS SLUDGE FIXATION SYSTEM. THIS INTERIM SLUDGE FIXATION SYSTEM COMMENCED OPERATIONS IN DECEMBER 1976. THE FACILITY INCLUDES DEWATERING EQUIPMENT AND FLY ASH ADDITION EQUIPMENT(COLLECTED FROM THE ESP). THE FIXATED MATERIAL IS THEN HAULED AWAY TO AN OFF-SITE LANDFILL AREA.

FLUE GASES FROM THE BOILERS ARE ACCELERATED TO A HIGH VELOCITY IN THE SCRUBBER. AT THE THROAT, THE GASES COLLIDE WITH THE SCRUBBING LIQUID, ATOMIZING IT INTO SMALL DROPLETS. THE FLY ASH AND THE SULFUR DIOXIDE IN THE GAS ARE PICKED UP BY THE SLURRY DROPLETS AND EXIT AT THE BASE OF THE TOWER. THE GAS THEN REVERSES DIRECTION AND FLOWS UP THROUGH THE MIST ELIMINATOR, WHERE FINE

DROPLETS ARE REMOVED BEFORE THE GAS LEAVES THE SCRUBBER.

STARTUP OF A PORTION OF THE PHILLIPS SCRUBBER SYSTEM BEGAN JULY 1973. SEVERAL PROBLEMS THEN DEVELOPED IN THE FORM OF EROSION OF FANS AND THE LIME FEED SYSTEM, CAUSING OUTAGES OF THE SCRUBBER SYSTEM. AFTER AN EXTENDED OUTAGE, THE SCRUBBER SYSTEM WAS RETURNED TO SERVICE IN MARCH 1974. THE SYSTEM HAS BEEN OPERATING CONTINUOUSLY SINCE THAT TIME WITH VARIOUS NUMBERS OF BOILERS CONNECTED TO THE SCRUBBER SYSTEM AND SCRUBBER TRAINS IN SERVICE.

DETERMINATION OF THE AVAILABILITY OF THE PHILLIPS SYSTEM HAS BEEN DIFFICULT. UNTIL ALL BOILERS WERE CONNECTED TO THE SCRUBBERS, THERE WAS AT LEAST ONE SPARE TRAIN AND AS MUCH AS 100 PERCENT SPARE SCRUBBER CAPACITY. THEREFORE , HAVING A TRAIN OUT OF SERVICE FOR MAINTENANCE DID NOT REDUCE THE CAPABILITY OF THE SCRUBBER SYSTEM. UNTIL ALL SIX BOILERS WERE CONNECTED, MEANINGFUL AVAILABILITY FACTORS COULD NOT BE COMPUTED. ON MARCH 17, 1975, THE SIXTH BOILER WAS CONNECTED, AND ALL FOUR SCRUBBER TRAINS WERE REQUIRED TO BE IN SERVICE. OPERATION IN THAT MODE CONTINUED UNTIL AUGUST 4, 1975, WHEN THE NO. 6 BOILER WAS REMOVED FROM THE SCRUBBER SYSTEM BECAUSE THE PH LEVEL COULD NOT BE MAINTAINED AND DEPOSITS BECAME UNMANAGEABLE TO THE POINT THAT SCRUBBER OUTAGES WERE REDUCING GENERATING CAPABILITY OF THE STATION.

PHILLIPS POWER STATION

MONTH	OPERATING HOURS BOILER 1	2	3	4	5	6	SCRUBBER-ABSORBER 101	201	301	401	COMMENTS
											FOURTH FGD TRAIN AND SIXTH BOILER WERE TIED IN ON MARCH 17, 1975. PARTICULATE TESTS IN MAY SHOWED
JUL. 75	83	644	703	349	605	643	400	180	531	723	OUTLET LOADINGS OF 0.04 LB/MILLION BTU. THE TWO-STAGE TRAIN HAS BEEN OUT OF SERVICE FROM JUNE 19 FOR GENERAL CLEANING AND REPAIR OF A LEAK IN THE FIRST-STAGE SCRUBBER.
AUG. 75	354	701	454	457	517	445	478	682	323	319	SCRUBBER UNAVAILABILITY FORCED RETURNING BOILER NO. 6 TO THE SCRUBBER BYPASS GAS PATH TO PREVENT LOSS OF BOILER CAPACITY. PLUGGING AND MAINTENANCE PROBLEMS HAVE BEEN ENCOUNTERED. EVALUATION OF VARIOUS RECYCLE PUMPS IS CONTINUING.
SEP. 75	463	287	669	503	672	525	57	561	685	536	IN OCTOBER 1975, PHILLIPS INITIATED THIOSORBIC
OCT. 75	547	575	620	604	681	687	607	207	505	487	LIME SCRUBBING IN THEIR SINGLE-STAGE MODULES ON AN EXPERIMENTAL BASIS. THE PURPOSE IS TO STUDY COMPLIANCE FEASIBILITY. SO2 REMOVAL EFFICIENCY, AND QUALITY OF THE SLUDGE GENERATED BY THE SINGLE-STAGE MODULES.
NOV. 75	16	720	688	70	720	593	626	720	0	75	THE UTILITY CONCLUDED THE THIOSORBIC LIME TESTING
DEC. 75	172	660	709	0	689	547	360	661	182	386	PROGRAM IN MID-DECEMBER. FOUR BOILERS WERE COUPLED TO THE SCRUBBING SYSTEM DURING THE RUN. THE UTILITY IS NOW ANALYZING THE DATA GENERATED DURING THE TEST PROGRAM. THE SCRUBBERS HAVE BEEN PUT BACK ON REGULAR LIME. NO UNUSUAL PROBLEMS WERE ENCOUNTERED DURING THE TEST RUN.
JAN. 76	222	722	639	0	662	661	277	536	101	707	THE 2.5-MONTH TEST PROGRAM WITH THIOSORBIC LIME

MONTH	OPERATING HOURS BOILER 1	2	3	4	5	6	SCRUBBER-ABSORBER 101	201	301	401	COMMENTS
											INCLUDED 1612 SERVICE HOURS ON ONE TRAIN AND 1309 HOURS ON ANOTHER TRAIN. RESULTS INDICATE THAT THE REQUIRED DEGREE OF SO_2 REMOVAL (83 PERCENT) CAN BE OBTAINED WITH AN MGO CONTENT OF 8-10 PERCENT IN THE LIME WITH SINGLE-STAGE SCRUBBING.
FEB. 76	445	588	672	0	633	571	657	662	166	406	
MAR. 76							695	353	659	461	PLANT OPERATION IS PROCEEDING WITH A TOTAL OF 4 BOILERS COUPLED INTO THE SCRUBBING SYSTEM (EQUALING 336 MW, WHICH IS 87 PERCENT OF THE TOTAL PLANT CAPACITY). THE FGD SYSTEM OPERATED ON HIGH CALCIUM LIME DURING THE REPORT PERIOD. THE GENERAL OPERATION MODE AT THIS FACILITY HAS ONE OF THE FOUR SCRUBBING TRAINS OUT CONTINUALLY FOR REPAIRS, CLEANING, AND PREVENTATIVE MAINTENANCE. THE UTILITY IS STILL EXPERIENCING PROBLEMS WITH SOLIDS DEPOSITION IN THE VENTURI THROAT OF THE SCRUBBING MODULE, CAUSING MOVEMENT INHIBITION AND GREATER PRESSURE DROPS. THE FGD SYSTEM AVAILABILITY FOR THE FIRST QUARTER OF 1976 WAS 72 PERCENT. THE SLUDGE STABILIZATION PRACTICES ARE STILL CONTINUNING AT THIS FACILITY.
APR. 76											
MAY 76											REDUCED LOAD OPERATIONS WERE REPORTED BY THE UTILITY FOR THE MAY-JUNE PERIOD BECAUSE OF A
JUN. 76											

	OPERATING HOURS										
	BOILER						SCRUBBER-ABSORBER				
MONTH	1	2	3	4	5	6	101	201	301	401	COMMENTS
											SCHEDULED TURBINE OVERHAUL TO UNIT NO. 6. THE SCRUBBING SYSTEM WAS SHUT DOWN ON JUNE 27 FOR A SCHEDULED FOUR WEEK REPAIR PERIOD. THE MAJORITY OF THE WORK WILL BE CONCENTRATED ON THE STACK, ASSOCIATED DUCTWORK, AND BOILER DAMPERS. ALSO, THE UTILITY IS PROCEEDING WITH THE INSTALLATION OF 3 ADDITIONAL LIME STORAGE SILOS AND A THIRD THICKENER.
JUL. 76											THE 4-WEEK SYSTEM OVERHAUL WAS COMPLETED JULY 25.
AUG. 76											DURING THIS PERIOD, THE FOLLOWING REPAIRS AND MODIFICATIONS WERE MADE*
											REPAIR OF THE TURNING VANES TO THE SCRUBBER DEMISTER.
											REPAIR OF THE EXPANSION JOINT SEAL WHERE THE DUCTWORK TIES INTO THE MAIN STACK.
											REPAIR OF STEEL BANDS AROUND INNER STACK STRUCTURE.
											OVERHAUL OF I.D. FANS.
											REPAIR OF BOILER EXIT DAMPERS.
											REPAIR LEAKAGE OF THE ACID-BRICK LINING IN THE MAIN STACK.
											THE THREE ADDITIONAL LIME STORAGE SILOS AND THE FOUNDATION FOR THE ADDITIONAL 75-FOOT DIAMETER THICKENER HAVE BEEN INSTALLED. THE UTILITY HAS SIGNED A LETTER-OF-INTENT WITH IUCS FOR A

MONTH	OPERATING HOURS BOILER 1	2	3	4	5	6	SCRUBBER-ABSORBER 101	201	301	401	COMMENTS
											LONG-TERM SLUDGE TREATMENT SYSTEM.
SEP. 76											BOILER NOS. 2-6 WERE COUPLED INTO THE SCRUBBING
OCT. 76											SYSTEM. BOILER NO. 1 IS DOWN FOR OVERHAUL AND REPAIRS. THE IUCS INTERIM SLUDGE PROCESSING PLANT IS UNDER CONSTRUCTION AND WILL BE IN SERVICE BY DECEMBER 1976. THE TEMPORARY FACILITIES WILL PROCESS THE THICKENER UNDERFLOW AND PONDED SLUDGE UNTIL THE POND IS DEPLETED OF SLUDGE AND THE PERMANENT FACILITY HAS BEEN INSTALLED. SCRUBBING OPERATIONS ARE STILL PROCEEDING IN AN OPEN-WATER-LOOP MODE WITH PART OF THE THICKENER OVERFLOW BEING DIVERTED TO THE ASH POND. BECAUSE BOTH THE BEAVER VALLEY AND BRUCE MANSFIELD STATIONS ARE FULLY OPERATIONAL, THIS STATION HAS BEEN RELEGATED TO PEAK LOAD OPERATIONS. GENERAL LOAD OPERATIONS ARE FULL LOAD CAPACITY IN THE DAYTIME AND 50 TO 67 PERCENT LOAD REDUCTION AT NIGHT.

TOTAL SCRUBBER HOURS* 23,274

TOTAL BOILER HOURS* 83,642

TOTAL SCRUBBER OUTAGE TIME* 5,500

TOTAL SCRUBBER AVAILABILITY HOURS* 23,274

AVERAGE MW LOAD/ SCRUBBER OPERATION HOUR* 243

TOTAL OPERABILITY INDEX* 28 PERCENT

THE FIGURES IN THE LEFT-HAND COLUMNS HAVE BEEN COMPILED BY THE UTILITY FOR SYSTEM OPERATIONS FOR THE PERIOD FOLLOWING START-UP IN JULY 1973 INCLUSIVE TO OCTOBER 1976. THE TOTAL SCRUBBER HOURS VALUE INCLUDE OPERATION TIME WHEN ONE OR MORE OF THE MODULES WERE IN SERVICE. TOTAL BOILER AND UNAVAILITY VALUES APPLY FOR ALL THE CORRESPONDING UNITS. THE TOTAL

	OPERATING HOURS BOILER	SCRUBBER-ABSORBER
NOV. 76		SCRUBBER AVAILABILITY INDEX INCLUDES THE TIME WHEN ONE OR MORE MODULES WERE AVAILABLE FOR SERVICE.
DEC. 76		THE UTILITY REPORTS THAT BOILERS 2 - 6 REMAINED COUPLED INTO THE SCRUBBING SYSTEM DURING THE REPORT PERIOD. THE INTERIM UICS FIXATION FACILITY WAS INSTALLED AND COMMENCED OPERATIONS IN DECEMBER. THE UTILITY REPORTS THAT THE VENTURI SCRUBBERS ARE STILL DEVELOPING LARGE AMOUNTS OF SCALE ON THE INTERNALS, RESULTING IN TWICE NORMAL PRESSURE DROPS. THE RECYCLE PUMP EVALUATION HAS BEEN IN PROGRESS. APPROXIMATELY 2500 TO 2800 HOURS OF OPERATION TIME HAVE BEEN ACCUMULATED ON THE VARIOUS UNITS WITH NO FAILURES OR APPRECIABLE WEAR OBSERVED. THE ADDITIONAL DEWATERING AND REAGENT PREPARATION EQUIPMENT IS NOW BEING INSTALLED. THE CONTRACT HAS BEEN AWARDED TO DRAVO TO PROVIDE THIOSORBIC LIME FOR THIS SCRUBBING SYSTEM.

TABLE 3
PERFORMANCE DESCRIPTION FOR OPERATIONAL FGD SYSTEMS 12/76

IDENTIFICATION NO.	36
UTILITY NAME	GENERAL MOTORS
UNIT NAME	CHEVROLET PARMA 1 2 3 & 4
UNIT LOCATION	PARMA OHIO
UNIT RATING	32 MW
FUEL CHARACTERISTICS	COAL 2.5 PERCENT SULFUR
FGD VENDOR	KOCH/GENERAL MOTORS
PROCESS	DOUBLE ALKALI SCRUBBING
NEW OR RETROFIT	RETROFIT
START UP DATE	3/74
FGD STATUS	OPERATIONAL
EFFICIENCY, PARTICULATES	80 PERCENT
SO2	90 PERCENT
WATER MAKE UP	CLOSED LOOP
SLUDGE DISPOSAL	UNSTABILIZED SLUDGE DISPOSED IN UNLINED POND
UNIT COST	$3.2 MILLION CAPITAL * $11.70 PER TON OF COAL ANNUALIZED
OPERATIONAL EXPERIENCE	REFER TO BACKGROUND INFORMATION SECTION IN TABLE 3 OF THIS REPORT. THE EMISSION CONTROL SYSTEM FOR THESE 4-COAL FIRED STOKER BOILERS CONSISTS OF MECHANICAL COLLECTORS INSTALLED UPSTREAM OF A DILUTE DOUBLE ALKALI SCRUBBING SYSTEM. THE FGD SYSTEM HAS BEEN IN SERVICE SINCE MARCH 1974. SYSTEM OPERABILITY INDEX VALUES FOR THE MONTHS OF NOVEMBER AND DECEMBER WERE 60 PERCENT AND 22 PERCENT, RESPECTIVELY. THE ANNUAL SYSTEM OPERABILITY INDEX VALUE FOR 1976 AVERAGED 64 PERCENT.

BACKGROUND INFORMATION

ON

THE CHEVROLET PARMA STEAM PLANT

THE CHEVROLET PARMA PLANT OF GENERAL MOTORS IS LOCATED NEAR CLEVELAND, OHIO. THE PLANT HAS FOUR SPREADER-STOKER BOILERS FIRED BY TRAVELING GRATES, CAPABLE OF PRODUCING A TOTAL OF 320,000 LB/HR OF STEAM OR APPROXIMATELY 32 MW OF EQUIVALENT ELECTRICAL CAPACITY. THE COAL FIRED IN THESE UNITS ORIGINATES PRIMARILY FROM THE SOUTHEASTERN PORTION OF OHIO AND HAS THE FOLLOWING AVERAGE CHARACTERISTICS* HEAT CONTENT OF 11,300 TO 13,900 BTU/LB* SULFUR CONTENT OF 1.7 TO 2.7 PERCENT* ASH CONTENT OF 6.8 TO 14.8 PERCENT* AND A TOTAL MOISTURE CONTENT OF 0.9 TO 7.8 PERCENT.

THE POWER BOILERS HAVE BEEN FITTED WITH AN EMISSION CONTROL SYSTEM CONSISTING OF MECHANICAL COLLECTORS UPSTREAM OF A DILUTE DOUBLE ALKALI SCRUBBING SYSTEM. THE FGD SYSTEM SCRUBBING MODULES WERE SUPPLIED BY KOCH ENGINEERING. INSTALLATION WAS COMPLETED ON FEBRUARY 28, 1974. THE SYSTEM CONSISTS OF FOUR SCRUBBERS OPERATING IN PARALLEL. EACH SCRUBBER CONTAINS THREE BUBBLE-CAP ABSORPTION TRAYS AND A MESH MIST ELIMINATOR.

THE SULFUR DIOXIDE CONTAINED IN THE BOILER FLUE GAS IS ABSORBED BY A REGENERATED CAUSTIC SOLUTION (0.1 MOLAR NAOH), FORMING A SOLUTION OF SOLUBLE SODIUM SALTS. THE SPENT CAUSTIC IS THEN REGENERATED BY REACTING THE SODIUM SALT SOLUTION WITH SLAKED LIME, RESULTING IN THE FORMATION OF CALCIUM SULFITE AND SULFATE SOLIDS, WHICH ARE SEPARATED OUT OF THE SOLUTION. NEXT, SODA ASH IS ADDED TO THE SOLUTION IN ORDER TO MAKE UP FOR SODIUM LOSSES AND MINIMIZE THE SCALE POTENTIAL FROM THE CALCIUM WHICH REMAINS IN SOLUTION. THE REGENERATED CAUSTIC FORMED IS THEN RECYCLED BACK TO THE SCRUBBER FOR ADDITIONAL SULFUR DIOXIDE REMOVAL. THE CALCIUM SALT AND FLY ASH SLUDGE WHICH RESULTS IS DEWATERED AND HAULED AWAY BY TRUCK TO AN OFF-SITE LANDFILL.

PROBLEMS AND SOLUTIONS

THE SYSTEM WAS STARTED UP ON FEBRUARY 28, 1974 AND BY APRIL 31 IT HAD OPERATED FOR 624 HOURS. THERE WERE TWO SCHEDULED SHUTDOWNS DURING THIS PERIOD FOR EQUIPMENT INSPECTION. THE SECOND SHUTDOWN REVEALED THAT SOLIDS WERE NOT BEING DISCHARGED FROM THE PRIMARY CLARIFIER RAPIDLY ENOUGH. AS A RESULT, THE CLARIFIER RAKE JAMMED. A PIPING CHANGE WAS MADE TO BLEND THE CAUSTIC FEED IN WITH THE RECYCLE LIQUOR. THIS HAS IMPROVED PERFORMANCE BUT NOT COMPLETELY ELIMINATED THE PROBLEM. PREMATURE CAKE CRACKING IN THE VACUUM FILTERS REQUIRED THE PRESENCE OF AN OPERATOR DURING OPERATION. G.M. ANTICIPATES THAT THE CHANGE TO NYLON FROM POLY-PROPYLENE WILL SOLVE THIS PROBLEM.

CAKE WASHING TO REDUCE SODIUM LOSSES WAS NOT INITIALLY SUCCESSFUL BECAUSE THE SPRAY WATER TENDED TO KNOCK THE CAKE OFF THE DRUM. ALTERATIONS IN SPRAY PATTERN AND OTHER MEASURES HAVE APPARENTLY SOLVED THIS PROBLEM. THERE HAS BEEN NO EVIDENCE OF CORRO-

SION OR ABRASION IN THE PUMPS OR PIPING.

THE SYSTEM WAS SHUT DOWN FROM MAY 1 TO MAY 28, 1974, BECAUSE OF UNEXPECTED BUILDUP OF SOLIDS IN THE CLARIFIER, WITH SUBSEQUENT OVERFLOW INTO THE SCRUBBER. THE PROBLEM WAS SOLVED BY 1) USING A POLYMERIC FLOCCULATION AGENT TO ATTAIN BETTER SETTLING AND 2) WITHDRAWING SLUDGE FROM THE CLARIFIER AT MORE FREQUENT INTERVALS. SYSTEM AVAILABILITY TO THE BOILER WAS 87 PERCENT IN APRIL 1974, LESS THAN 10 PERCENT IN MAY, AND 100 PERCENT IN JUNE, JULY, AND AUGUST AFTER THE SYSTEM WAS RESTARTED. PLUGGING BY GYPSUM DEPOSITS IN THE OVERFLOW LINE BETWEEN THE CLARIFIERS AND IN THE LINE FROM CLARIFIER NO. 2 TO THE MIX TANKS WAS CORRECTED BY RELOCATING A CHEMICAL FEED LINE AND REPLACING SOME PIPING. THE SYSTEM WAS DOWN THROUGHOUT JULY AND AUGUST FOR REPLACEMENT OF GRAVITY FLOW LINES WITH AN OPEN FLUME THAT CAN BE EASILY CLEANED. ADDITIONAL MODIFICATIONS TO THE DESIGN AND OPERATION OF THE FGD SYSTEM HAVE CONTINUED. THE OPERABILITY INDEX FOR THE FGD SYSTEM HAS INCREASED SIGNIFICANTLY THROUGHOUT THE COURSE OF 1976. THE MAJOR PROBLEM AND SOLUTION AREAS, PLUS MODIFICATIONS IMPLEMENTED TO THE SYSTEM ARE HIGHLIGHTED BELOW IN THE SYSTEM PERFORMANCE TABLE. A PROCESS FLOW DIAGRAM OF THE DOUBLE ALKALI UNIT IS PRESENTED IN FIGURE 7 OF APPENDIX C.

MONTH	OPERATION HOURS BOILER 1	2	3	4	FGD SYSTEM 1	2	3	4	OPERABILITY (%) 1	2	3	4	COMMENTS
JUN. 75													RECENT OPERATION HAS BEEN INTERMITTENT. TESTS HAVE BEEN CONDUCTED FOR ANALYSIS OF PARTICULATE LOADING AT THE BOILER OUTLET. THE SYSTEM WAS RESTARTED IN MAY BUT WAS SHUT DOWN BECAUSE OF A PLUGGED CHEMICAL FEED LINE TO CLARIFIER. AFTER RESTART, AROUND JUNE 10, THE SYSTEM WAS SHUT DOWN BECAUSE OF SIMILAR PLUGGING IN ANOTHER PART OF THE LINE. UNIT RAN FOR ABOUT 2 WEEKS IN JUNE.
JUL. 75													FGD SYSTEM WAS DOWN IN JULY AND AUGUST FOR REPLACEMENT OF GRAVITY FLOW LINES WITH AN OPEN FLUME.
AUG. 75													
SEP. 75													FGD SYSTEM RESTARTED SEPTEMBER 8, AND OPERATED DURING THIS PERIOD AT AN AVAILABILITY FACTOR OF 80 PERCENT.
OCT. 75		2331*				1848*				79			NOTE THE FIGURES GIVEN FOR SEPTEMBER AND OCTOBER REPRESENT THE OPERATION HOURS FROM SEPTEMBER 8 TO NOVEMBER 9
NOV. 75													THE FGD SYSTEM OPERATED DURING THE REPORT PERIOD EXCEPT FOR A SCHEDULED HOLIDAY SHUTDOWN FROM DECEMBER 23 TO JANUARY 4, 1976. BECAUSE OF PROBLEMS WITH SOLIDS AND SOLIDS CARRYOVER, G.M.
DEC. 75		2135				1250				59			

CHEVROLET PARMA

MONTH	OPERATION HOURS BOILER 1	2	3	4	FGD SYSTEM 1	2	3	4	OPERABILITY (%) 1	2	3	4	COMMENTS
													CONDUCTED STREAM TESTS DURING DECEMBER TO DETERMINE WHETHER SOLIDS CARRYOVER IS DUE TO A HIGH SOLIDS RECIRCULATION RATE. THE FGD SYSTEM WAS DOWN MOST OF DECEMBER BECAUSE OF THESE TESTS, WHICH CAUSED THE LOW OPERABILITY FACTOR.
JAN. 76													G.M. HAS FOUND SOLIDS CONCENTRATION IN
FEB. 76		2997				1196				40			THE CLARIFIER TOO HIGH FOR EFFICIENT SYSTEM OPERATION.A.D.LITTLE IS SCHEDULED TO CONDUCT TESTS ON THE SYSTEM IN APRIL AS PART OF AN EPA EVALUTATION PROGRAM.
MAR. 76		1379				240				7			THE LOW OPERABILITY INDEX DURING THE MONTH OF MARCH RESULTED FROM EXTENSIVE MODIFICATIONS PERFORMED ON THE SYSTEM BY G.M. DURING THIS PERIOD THE SCRUBBER BLOWDOWN AND SCRUBBER FLOW INDICATION SYSTEM WAS REVISED.
APR.		1084				847				78			FROM APRIL 19 TO THE END OF THE MONTH THE SYSTEM WAS OPERABLE 100%. DURING THIS PERIOD ALL SYSTEM MODIFICATIONS WERE COMPLETED AND ALL MAJOR PROBLEM AREAS CORRECTED.
MAY 76		1149				1042				91			NO MAJOR PROBLEMS WERE ENCOUNTERED DURING THE REPORTING PERIOD.
JUN. 76		924				816				88			ONE SYSTEM UPSET OCCURRED DURING THE

MONTH	OPERATION HOURS BOILER 1	2	3	4	FGD SYSTEM 1	2	3	4	OPERABILITY (%) 1	2	3	4	COMMENTS
													PERIOD DUE TO AN OPERATOR ERROR. BOILER HOURS WERE LOW IN JUNE BECAUSE OF LOW PROCESS DEMAND. THE SCRUBBING SYSTEM CHARACTERIZATION STUDY WAS CONCLUDED ON MAY 14, 1976.
JUL. 76		599				599				100			THE BOILER LOAD DEMAND WAS VERY LIGHT DURING
AUG. 76		715				715				100			THE REPORT MONTHS, REQUIRING ONLY ONE BOILER BEING CONTINUOUSLY ON LINE. THE SYSTEM WAS DOWN FOR A ONE-WEEK PERIOD BECAUSE OF THE ANNUAL PLANT INVENTORY. MODIFICATIONS TO THE OPERATION OF THE GAS SCRUBBING SYSTEM HAVE INCLUDED* ELIMINATION OF POLYMERIC ADDITION. ELIMINATION OF SLUDGE BLANKET FOR FILTRATION. HIGH PERCENT SULFATE CONCENTRATION IN THE FILTER CAKE. INCORPORATION OF A PH CONTROLLER IN THE CHEMICAL MIX TANK REGULATING THE LIME FEED INTO THE SYSTEM. PH CONTROL SHOULD REDUCE THE CURRENT STOICHIOMETRIC REQUIREMENTS FROM THE 1.25 - 1.50 RANGE DOWN TO 1.10 - 1.20.
SEP.76		809				223				40			TWO BOILERS AND THEIR CORRESPONDING SCRUBBER MODULES WERE IN SERVICE DURING THE MONTH. OPERATION TIME WAS LOGGED PRIMARILY IN THE

MONTH	OPERATION HOURS BOILER 1	2	3	4	FGD SYSTEM 1	2	3	4	OPERABILITY (%) 1	2	3	4	COMMENTS
													INITIAL PART OF THE MONTH. A NUMBER OF PROBLEMS WERE ENCOUNTERED, FORCING A SHUTDOWN THROUGHOUT THE REMAINDER OF THE MONTH. THESE INCLUDED* SOLIDS DEPOSITION AND PLUGGING OF THE CHEMICAL TANKS AND REACTORS, REQUIRING SHUTDOWN AND CLEANOUT. AGITATOR PROBLEMS. BOILER PROBLEMS. REPLACEMENT OF DEMISTER PADS.
OCT. 76		1174				734				63			THE SYSTEM WAS RETURNED TO SERVICE THE SECOND WEEK IN OCTOBER. TWO BOILERS AND THEIR CORRESPONDING SCRUBBERS WERE PUT BACK IN THE GAS STREAM. PROBLEMS ENCOUNTERED STEMMED PRIMARILY FROM A MECHANICAL COLLECTOR MALFUNCTION,RESULTING IN EXCESSIVE DUST LOADINGS IN THE MODULES AND EVENTUALLY CAUSING WIDESPREAD PLUGGING OF THE LOWER BUBBLE-CAPE TRAYS. SHUTDOWN AND CLEANOUT OF THE MODULES PLUS REPAIRS TO THE MECHANICAL COLLECTOR WERE REQUIRED. SYSTEM RESTART OCCURRED NOVEMBER 8. MAJOR MODIFICATIONS PERFORMED TO THE DOUBLE ALKALI SYSTEM DURING THE PERIOD INCLUDED* INSTALLATION OF A GREAT LAKES PH MONITOR

MONTH	OPERATION HOURS BOILER 1	2	3	4	FGD SYSTEM 1	2	3	4	OPERABILITY (%) 1	2	3	4	COMMENTS
													AND CONTROL UNIT FOR THE REGULATION OF LIME FEED TO THE REGENERATION REACTOR-CLARIFIER UNIT. THIS UNIT EMPLOYS A DIGITAL READOUT AND IS SCHEDULED FOR OPERATION SOMETIME IN NOVEMBER. SUPERIOR CRYSTAL GROWTH OF THE CALCIUM SULFITE/SULFATE SALTS HAS RESULTED BY RUNNING A SEEDING LINE BACK TO THE REACTOR-CLARIFIER UNIT.
NOV. 76		1321				787				60			THE FGD FIGURES REPORTED FOR THE MONTH OF DECEMBER ARE SOMEWHAT DISTORTED BECAUSE UAW PERSONNEL CAN ONLY OPERATE THE SYSTEM AND THEREFORE THE SCRUBBERS COULD NOT BE OPERATED DURING THE CHRISTMAS HOLIDAY PERIOD. DURING THE LATTER PART OF NOVEMBER AND EARLY DECEMBER PERIOD THE SCRUBBERS WERE TAKEN OUT OF THE FLUE GAS PATH BECAUSE OF CONTINUED SOLIDS BUILD UP IN THE MIX TANK. IN ADDITION, SOME PIPING ARRANGEMENTS WERE MODIFIED AND THE GEAR REDUCER IN THE MIX TANK HAD TO BE REPLACED.
DEC. 76		1559				349				22			

TABLE 3
PERFORMANCE DESCRIPTION FOR OPERATIONAL FGD SYSTEMS 12/76

IDENTIFICATION NO.	37
UTILITY NAME	GULF POWER CO.
UNIT NAME	SCHOLZ NOS. 1B & 2B
UNIT LOCATION	CHATTAHOOCHEE FLORIDA
UNIT RATING	23 MW
FUEL CHARACTERISTICS	COAL 5.0 PERCENT SULFUR (MAX)
FGD VENDOR	CHIYODA INTERNATIONAL
PROCESS	THOROUGHBRED 101
NEW OR RETROFIT	RETROFIT
START UP DATE	3/75
FGD STATUS	OPERATIONAL
EFFICIENCY, PARTICULATES	99.7 PERCENT
SO2	90 PERCENT
WATER MAKE UP	OPEN LOOP
SLUDGE DISPOSAL	UNSTABILIZED SLUDGE DISPOSED IN DRY GYPSUM POND
UNIT COST	$3 MILLION CAPITAL COST
OPERATIONAL EXPERIENCE	REFER TO THE BACKGROUND INFORMATION SECTION IN TABLE 3 OF THIS REPORT. THIS PROTOTYPE DEMONSTRATION UNIT WAS FIRST PUT INTO THE FLUE GAS PATH ON FEBRUARY 11,1976. THE OPERABILITY INDEX FOR OPERATIONS DURING 1975 WAS 60 PERCENT. THE UNIT WAS IN SERVICE THROUGHOUT THE REPORT MONTHS, ACHIEVING OPERABILITY INDEX VALUES OF 99.5 AND 99.6 PERCENT,RESPECTIVELY. THE ANNUAL AVERAGE OPERABILITY INDEX VALUE FOR 1976 OPERATIONS WAS 64 PERCENT(FOR 9 MONTHS OF OPERATION). THE PROTOTYPE FGD UNIT IS SCHEDULED TO CONTINUE OPERATIONS THROUGHOUT THE COMING YEAR.

BACKGROUND INFORMATION

ON

SCHOLZ UNITS 1 AND 2 - CHIYODA

THE SCHOLZ POWER PLANT IS LOCATED IN CHATTAHOOCHEE, FLORIDA, ABOUT 50 MILES WEST OF TALLAHASSEE. THE FGD SYSTEM WAS DESIGNED BY CHIYODA INTERNATIONAL CORP. FOR TESTING AND PROCESS DEMONSTRATION ON A COAL-FIRED APPLICATION. THE PROCESS IS USED IN JAPAN EXCLUSIVELY ON OIL-FIRED AND GAS-FIRED BOILERS, AND TAIL GAS FROM CLAUS UNITS.

THE SYSTEM AT SCHOLZ CAN HANDLE ONE-HALF THE LOAD (53,000 SCFM) FROM EITHER OF THE 40-MW NOMINALLY RATED BOILERS, WHICH WERE DESIGNED AND INSTALLED BY BABCOCK AND WILCOX IN 1953. DESIGN ABSORBER INLET SULFUR DIOXIDE CONCENTRATION IS 2250 PPM. VARIOUS TEST COALS WITH SULFUR CONTENTS RANGING UP TO 5 PERCENT ARE SCHEDULED FOR BURNING.

THE PARTICULATE LOADS FROM NEWLY INSTALLED ELECTROSTATIC PRECIPITATORS ON THE TWO UNITS RANGE FROM 0.02 TO 0.1 GR/SCF. FLUE GAS FROM THE PRECIPITATORS IS QUENCHED WITH COOLING WATER TO REMOVE ADDITIONAL FLY ASH AND TO COOL THE GAS BEFORE IT ENTERS THE SULFUR DIOXIDE ABSORBER.

SULFUR DIOXIDE IS ABSORBED IN WATER AND CATALYTICALLY OXIDIZED WITH AIR TO FORM SULFURIC ACID. THE DILUTE ACID IS RECIRCULATED THROUGH THE ABSORBER. A PORTION OF THE ACID IS NEUTRALIZED WITH LIMESTONE TO PRODUCE GYPSUM AS A BY-PRODUCT.

BREAK-IN TESTING COMMENCED IN FEBRUARY 1975. THE FIRST FEW MONTHS OF THE SHAKEDOWN PERIOD WERE CHARACTERIZED BY MANY MINOR PROBLEMS, RESULTING IN A LOW OPERABILITY INDEX VALUE(30% FOR MAY-FEB.). MANY OF THESE PROBLEMS WERE RESOLVED BY JUNE, MANIFESTED I N A HIGHER OPERABILITY INDEX VALUE FOR THE JUNE-JULY PERIOD(84%) . A 6-WEEK SCRUBBER OUTAGE PERIOD COMMENCED IN AUGUST FROM UNBALANCING OF THE GYPSUM CENTRIFUGES. AFTER REPAIR OF THE CENTRIFUGES AND INSTALLATION ON SEPTEMBER 15, THE OPERABILITY INDEX THROUGH DECEMBER, 1975 AVERAGED ABOVE 97 PERCENT.

INFORMATION AND DATA CONCERNING THE OPERATION OF THE CT-101 PROTOTYPE UNIT ARE PRESENTED IN THE PERFORMANCE TABLE THAT FOLLOWS. THIS SYSTEM IS SCHEDULED TO CONTINUE OPERATIONS THROUGH 1976 AND 1977. A PROCESS FLOW DIAGRAM OF THE SCHOLZ CT-101 PROTOTYPE UNIT IS PRESENTED IN FIGURE 8 OF APPENDIX C.

SCHOLZ 1B AND 2B - CHIYODA

MONTH	TOTAL HOURS	UNIT OPERATING HOURS BOILER	UNIT OPERATING HOURS FGD SYSTEM	FGD SYSTEM PERFORMANCE (%) OPERABILITY	FGD SYSTEM PERFORMANCE (%) UTILIZATION	COMMENTS
FEB. 75	672	672	-			THIS IS A PILOT PLANT SIZE DEMONSTRATION UNIT.
APR. 75	720	720	200	28	28	1973. INITIAL SHAKEDOWN AND DEBUGGING OPERATIONS
MAY 75	744	744	100	13	13	COMMENCED ON FEBRUARY 11, 1975. PROBLEMS ENCOUNTERED INCLUDED CRACKS IN THE FRP LINING AT THE OXIDIZING TOWER. STARTUP OCCURRED IN MARCH 1975. AFTER INITIAL OPERATION FOR BREAK-IN TESTS, THE UNIT WAS SHUT DOWN FOR INTERNAL INSPECTION. RELIABILITY TESTS THEN FOLLOWED IN JULY 1975. CHEMICAL PERFORMANCE WAS SATISFACTORY. EMISSION TESTS HAVE NOT BEEN PERFORMED. SOME PUMP AND INSTRUMENT FAILURES HAVE OCCURRED.
JUN. 75	720	685	685	100	95	A 100 PERCENT OPERABILITY FACTOR WAS REGISTERED
JUL. 75	744	744	624	84	84	FOR THE MONTH OF JUNE. DURING THE MONTH OF JULY ONE CENTRIFUGE BECAME UNBALANCED, REQUIRING THE SPARE TO BE PLACED IN SERVICE.
AUG. 75	744		0			DURING THE MONTH OF AUGUST BOTH CENTRIFUGES BECAME
SEP. 75	720	720	337	46	46	UNBALANCED REQUIRING A FORCED OUTAGE WHICH EXTENDED TO MID-SEPTEMBER. UNIT OPERATED AT A 95 PERCENT SO2 REMOVAL EFFICIENCY DURING THIS PERIOD. GULF POWER IS ATTEMPTING TO UPGRADE THIS VALUE TO A HIGHER EFFICIENCY LEVEL.
OCT. 75	744	744	744	100	000	WASTE WATER DISCHARGE FROM THIS UNIT STILL A PROBLEM AREA.
NOV. 75	720	720	720	100	100	OUTAGE TIME WAS LESS THAN ONE HOUR DURING NOVEMBER

SCHOLZ 1B AND 2B - CHIYODA (CONTINUED)

MONTH	TOTAL HOURS	UNIT OPERATING HOURS BOILER	UNIT OPERATING HOURS FGD SYSTEM	FGD SYSTEM PERFORMANCE (%) OPERABILITY	FGD SYSTEM PERFORMANCE (%) UTILIZATION	COMMENTS
						OPERATION DUE TO A BROKEN FLUE GAS BLOWER INLET VANE AND REPAIR OF A PINHOLE IN THE PRESCRUBBER FRP LINING.
DEC. 75	744	744	726	98	98	SCRUBBER OUTAGES DURING DECEMBER RESULTED FROM CONTINUING REPAIRS TO A PINHOLE IN THE PRESCRUBBER FRP LINING.
JAN. 76	744	680	450	66	60	OUTAGE TIME IN JANUARY-FEBRUARY WAS PRIMARILY FOR REPAIR AND MODIFICATION OF THE SUCTION AND DISCHARGE PIPING ON THE ABSORBENT CIRCULATION PUMPS. THESE FRP LINES BROKE IN JANUARY AT SOME WEAK FIELD JOINTS. SO2 REMOVAL EFFICIENCY HAS BEEN AS HIGH AS 95%.
FEB. 76	696	690	77	11	11	
MAR. 76	744	744	741	100	100	PLANT WAS STOPPED APRIL 5 FOR A SCHEDULED SHUTDOWN TO ALLOW INSTALLATION AND MODIFICATIONS FOR REDUCING THE QUANTITY OF LIQUID WASTE FROM THE SYSTEM. START-UP AND TESTING OF THIS MODIFICATION WAS PLANNED FOR THE FIRST WEEK IN MAY. A FIRE AT THE PLANT, HOWEVER, NECESSITATED A DELAY IN SYSTEM RESTART FOR AN ADDITIONAL 3 TO 4 WEEKS.
APR. 76	720	720	101	14	14	
MAY 76						THE SYSTEM WAS SHUT DOWN APRIL 24 BECAUSE OF EXTENSIVE FIRE DAMAGE IN THE OXIDIZING TOWER. THE FIRE, CAUSED BY A WELDING ACCIDENT, DAMAGED FRP AND POLYPROPYLENE COMPONENTS IN THE OXIDIZING TOWER. REPAIRS CONTINUED AS THE SYSTEM REMAINED OUT OF SERVICE DURING
JUN. 76						

SCHOLZ 1B AND 2B - CHIYODA (CONTINUED)

MONTH	TOTAL HOURS	UNIT OPERATING HOURS BOILER	UNIT OPERATING HOURS FGD SYSTEM	FGD SYSTEM PERFORMANCE (%) OPERABILITY	FGD SYSTEM PERFORMANCE (%) UTILIZATION	COMMENTS
						THE REPORT PERIOD. SYSTEM RESTART IS SCHEDULED FOR THE END OF JULY.
JUL. 76						THE PROTOTYPE UNIT REMAINED OUT OF SERVICE
AUG. 76	744	744	492	66	66	MAY, JUNE AND JULY TO REPAIR THE FIRE-DAMAGED AREAS. THE SYSTEM WAS PUT BACK IN OPERATION IN AUGUST. THE SYSTEM WAS AGAIN BROUGHT DOWN DURING THE MONTH TO COMPLETE ADDITIONAL REPAIRS WHICH WENT UNDETECTED DURING THE PREVIOUS OUTAGE. 241.67 HOURS OF THE 251.75 HOURS OF AUGUST OUTAGE TIME WAS CONSUMED FOR THESE ADDITIONAL REPAIRS. THE WATER SAVINGS PROGRAM IS NOW BEING CONDUCTED ON THIS SYSTEM. BASICALLY, THIS TEST PROGRAM CALLS FOR A REDUCTION IN WASTEWATER BLOWDOWN AND FRESH WATER MAKEUP REQUIREMENTS BY RECYCLING THE MOTHER LIQUOR BLEED BACK TO THE PROCESS FOR ADDITIONAL SERVICE.

SCHOLZ 1B AND 2B - CHIYODA (CONTINUED)

MONTH	TOTAL HOURS	UNIT OPERATING HOURS BOILER	UNIT OPERATING HOURS FGD SYSTEM	FGD SYSTEM PERFORMANCE (%) AVAILABILITY	OPERABILITY	RELIABILITY	UTILIZATION	COMMENTS
SEP. 76	780	720	496	99	69	99	69	TOTAL FORCED OUTAGE TIME DURING THE MONTH AMOUNTED TO 5.1 HOURS.
OCT. 76	744	744	357	70	48	62	48	TOTAL DOWN TIME DURING THE MONTH AMOUNTED TO 386.9 HOURS. OF THIS TOTAL 1.1 HOUR WAS ATTRIBUTED TO A FORCED SCRUBBER OUTAGE* 218 HOURS WAS REQUIRED TO REPAIR EXPECTED DAMAGES INCURRED IN THE PRE SCRUBBER RESULTING FROM OPERATIONS IN THE WATER SAVINGS PROGRAM. SPECIFICALLY, THE LINING WAS SUFFERING FROM EXTENSIVE CORROSION DAMAGE BECAUSE OF HIGH ACID CONCENTRATIONS WHICH DEVELOPED IN THE PRESCRUBBER SCRUBBER SOLUTION. THIS OUTAGE WAS SCHEDULED FOR INSPECTION, REPAIR, AND PROVIDE DESIGN DATA FOR FUTURE UNITS. SO2 REMOVAL EFFICIENCY STILL RESIDES IN THE 85-95 PERCENT RANGE.
NOV. 76	720	720	717	99	99	99	99	A TOTAL OF THREE FORCED SCRUBBER OUTAGE TIME TOTALLING 6.5 HRS WAS REPORTED BY THE SYSTEM SUPPLIER FOR OPERATIONS DURING THE PERIOD.
DEC. 76	744	744	741	99	99	99	99	

COMMENTS (CONTINUED)

PROBLEMS INCLUDED A MALFUNCTION GRID VANE. AN OPERATOR CAUSED THE OTHER OUTAGE.

TABLE 3
PERFORMANCE DESCRIPTION FOR OPERATIONAL FGD SYSTEMS 12/76

IDENTIFICATION NO.	40
UTILITY NAME	KANSAS CITY POWER & LIGHT
UNIT NAME	HAWTHORN NO 3
UNIT LOCATION	KANSAS CITY MISSOURI
UNIT RATING	140 MW
FUEL CHARACTERISTICS	COAL 0.6- 3.0 PERCENT SULFUR
FGD VENDOR	COMBUSTION ENGINEERING
PROCESS	LIMESTONE INJECTION &WET SCRUB
NEW OR RETROFIT	RETROFIT
START UP DATE	11/72
FGD STATUS	OPERATIONAL
EFFICIENCY, PARTICULATES	99 PERCENT
SO2	70 PERCENT
WATER MAKE UP	OPEN LOOP 8.0 GPM/MW
SLUDGE DISPOSAL	UNSTABILIZED SLUDGE DISPOSED IN UNLINED POND
UNIT COST	$19/KW CAPITAL*2.5 MILS/KWH OP
OPERATIONAL EXPERIENCE	REFER TO THE BACKGROUND INFORMATION SECTION IN TABLE 3 OF THIS REPORT. THIS INJECTION AND TAIL-END WET SCRUBBING SYSTEM WAS DESIGNED AND INSTALLED BY COMBUSTION ENGINEERING AND PLACED IN SERVICE NOVEMBER 1972. OPERATION OF THIS SCRUBBING SYSTEM DURING 1976 HAS BEEN INTERMITTENT. A NUMBER OF MAJOR MODIFICATIONS ARE BEING PERFORMED TO THE SYSTEM BY THE UTILITY.MAJOR CHANGES HAVE INCLUDED*CONVERSION FROM A LIMESTONE TO A LIME INJECTION SYSTEM, DEMISTER WASH SYSTEM MODIFICATIONS, SCRUBBER BED SPRAY SYSTEM MODIFICATIONS, AND MODIFICATIONS TO THE GAS DAMPER ARRANGEMENT.

BACKGROUND INFORMATION

ON

THE HAWTHORN POWER STATION* UNIT NO. 3

THE HAWTHORN POWER STATION IS LOCATED ON THE NORTH BANK OF THE MISSOURI RIVER IN EAST KANSAS CITY, MISSOURI. THE PLANT HAS FIVE ELECTRIC GENERATING UNITS WITH A TOTAL RATED CAPACITY OF 980 MW. ONLY UNITS 3 AND 4 ARE RETROFITTED WITH FGD SYSTEMS.

BOILER 3 IS A DRY-BOTTOM PULVERIZED-COAL-FIRED UNIT, MANUFACTURED BY COMBUSTION ENGINEERING AND INSTALLED IN EARLY 1950. THE PLANT BURNS TWO GRADES OF COAL* THE COAL WITH HIGHER ASH CONTENT TYPICALLY CONTAINS 14 PERCENT ASH AND 3 PERCENT SULFUR. WITH A HEAT CONTENT OF 11,400 BTU/LB* THE LOWER ASH COAL HAS 11 PERCENT ASH, 0.6 PERCENT SULFUR, AND A HEAT CONTENT OF 9800 BUT/LB.

THE FGD SYSTEM OPERATES ON LIMESTONE FURNACE INJECTION FOLLOWED BY A FLUE GAS WET-SCRUBBING SYSTEM IN WHICH BOTH THE SULFUR DIOXIDE AND THE FURNACE-CALCINED LIMESTONE ARE SCRUBBED AND ALLOWED TO REACT IN A REACTION TANK.

THE FGD SYSTEM CONSISTS OF TWO IDENTICAL MODULES, EACH CAPABLE OF TREATING 500,000 ACFM OF FLUE GAS AT 300 F. BYPASSING OF THE MODULES IS POSSIBLE THROUGH A SYSTEM OF DUCTWORK AND DAMPERS AROUND EACH MODULE. EACH MODULE CONSISTS OF A GLASS MARBLE BED, A CHEVRON-TYPE FIBERGLASS DEMISTER, AND A FINNED TUBE REHEATER. THE DEMISTER WASH SYSTEM USES A SET OF EIGHT WATER LANCES THAT TURN ON AUTOMATICALLY TO WASH MUD FROM THE DEMISTERS WHENEVER THE DAMPERS CLOSE.

THE SPENT LIMESTONE SLURRY FROM THE MODULES IS DISCHARGED INTO A CLARIFIER TANK, AND THE UNDERFLOW IS PUMPED, UNSTABILIZED, TO A 160-ACRE UNLINED POND, WHICH IS ALSO USED FOR DISPOSAL OF FLY ASH FROM THE OTHER BOILERS. A PROCESS FLOW DIAGRAM OF THE LIMESTONE INJECTION AND TAIL-END WET LIME SCRUBBING SYSTEM INSTALLED ON THIS UNIT IS PRESENTED IN FIGURE 9 OF APPENDIX C.

PROBLEMS AND SOLUTIONS

THE MAJOR PROBLEMS ENCOUNTERED WITH THE TWO FGD SYSTEMS ON UNITS 3 AND 4 AT THE HAWTHORN POWER STATION HAVE BEEN IDENTICAL.

BECAUSE MAINTAINING THE SOLIDS IN THE REACTION TANKS IN SUSPENSION WAS DIFFICULT, BUILDUP OF MUD OCCURRED IN THE CORNERS OF THE TANK. THE PROBLEM WAS SOLVED BY ROUNDING THE BOTTOM CORNERS, INSTALLING FRESH WATER FLUSHING NOZZLES ON EACH WALL, AND INCREASING THE HORSEPOWER OF THE TANK MIXERS.

SEDIMENT BUILDUP OCCURRED IN THE DRAIN POTS HORIZONTAL HEADERS. ALSO, FREQUENT LOCATION OF THE MARBLE BED DRAIN POT COVERS AND CONSEQUENT LOSS OF MARBLES WAS SOLVED BY INSTALLING NEW STAINLESS STEEL DRAIN POTS WITH EXPANDED METAL COVERS AND MODIFYING THE DRAIN PIPING. OTHER MODIFICATIONS INCLUDED INSTALLING A NEW WASH SYSTEM TO CONTROL DEMISTER PLUGGING, CHANGING THE FLUSHING SEQUENCE WITHIN THE WATER SEAL TO ELIMINATE BYPASS SEAL PLUGGING, AND REPLACING SPRAY NOZZLES. THESE MODIFICAITONS WERE COMPLETED BY FEBRUARY 1974. INFORMATION ON ADDITIONAL CHANGES AND MODIFICATIONS IS CONTAINED IN THE TABLE THAT FOLLOWS.

HAWTHORN NO. 3

OPERATING HOURS MONTH	BOILER	MODULE 3A	MODULE 3B	FGD OPERABILITY (%) MODULE A	MODULE B	COMMENTS
JUL. 75	584	0		0		PROBLEMS WITH MODULE 3A INCLUDED A LEAK IN CITY WATER LINE, A PLUGGED DUCT TO THE I.D. FAN, A MALFUNCTIONING OUTLET DAMPER FROM THE SCRUBBER.
			247		42	MARBLES WERE LOST FROM THE BED AND A SPRAY HEADER WAS BROKEN.
AUG. 75	0	0	0	0	0	LOST I.D. FAN FOR HALF OF THE BOILER. CARRYOVER OF JULY PROBLEMS
SEP. 75	358	247	81	69	23	OUTAGE DUE TO CLEANING AND MECHANICAL REPAIRS. POTS, COVERS, AND MARBLES IN THE MARBLE BED OF MODULE 3B WERE REPLACED.
OCT. 75	180	117	145	65	81	MODULE 3A OUTAGE WAS DUE LARGELY TO REPLACEMENT OF A RECYCLE PUMP MOTOR. A SCHEDULED BOILER OVERHAUL REDUCED BOILER OPERATION HOURS.
NOV. 75	0	0	0	0	0	BOILER AND SCRUBBERS WERE SHUT DOWN FOR A SCHEDULED TRUBINE OVERHAUL.
DEC. 75	0	0	0	0	0	THE SYSTEM IS SCHEDULED TO GO BACK ON-LINE IN JANUARY 1976.
JAN. 76	0	0	0	0	0	SYSTEM WAS DOWN ALL MONTH BECAUSE OF FROZEN EQUIPMENT AND LINES AND A MANPOWER SHORTAGE DUE TO A BOILER AND TURBINE OVERHAUL ON ANOTHER UNIT AT THIS STATION.
FEB. 76	503	148	7	37	1	SCRUBBER OUTAGES RESULTED FROM PLUGGING IN THE SCRUBBER BED, CAUSED BY CONVERSION FROM AN UNDER-BED TO OVER-BED SPRAY SYSTEM.

OPERATING HOURS MONTH	BOILER	MODULE 3A	MODULE 3B	FGD OPERABILITY (%) MODULE A	MODULE B	COMMENTS
MAR. 76	0	0	0	0	0	RECONVERSION OF MODULE 3B'S SPRAY SYSTEM ARRANGEMENT HAS BEEN COMPLETED.
APR. 76	0	0	0	0	0	ALSO, THE BYPASS SYSTEM HAS BEEN MODIFIED AND CHANGED TO A SLIDE-GATE DAMPER ARRANGEMENT.
MAY 76	0	0	0	0	0	THE SYSTEM WAS SHUT DOWN DURING THE MONTH DUE TO THE CONTINUATION OF MANPOWER SHORTAGE PROBLEMS. THE UTILITY DID PERFORM SOME CLEANING AND REPAIRS DURING THE MONTH.
JUN. 76	505	198	220	39	44	THE UTILITY IS IN THE PROCESS OF MODIFYING THE DEMISTER WASH SYSTEM BOTH UNITS NOS. 3 AND 4. THE WATER LANCES, FORMERLY CONSTRUCTED OF FRP, ARE BEING CHANGED TO CARBON STEEL COMPONENTS IN ORDER TO RECTIFY LOSS OF SPRAY NOZZLES AND SUBSEQUENT SHATTERING OF THE LANCES.
JUL. 76						THE UTILITY IS NOW IN THE PROCESS OF CONVERTING
AUG. 76						THIS SYSTEM FROM LIMESTONE INJECTION AND TAIL END SCRUBBING TO A LIME SLURRY BASED SCRUBBING SYSTEM.
SEP. 76						THE SYSTEM WAS VIRTUALLY OUT OF SERVICE THE
OCT. 76						ENTIRE REPORT PERIOD. MANPOWER COMMITMENTS WERE SERIOUSLY HAMPERED BY A MAJOR EXPLOSION WHICH OCCURRED IN THE COAL MILL PULVERIZING AREA OF HAWTHORN NO. 5.
NOV. 76	0	0		0	0	THE UNIT DID NOT OPERATE DURING THE PERIOD BECAUSE
DEC. 76	0	0		0	0	OF THE ONGOING MAJOR MODIFICATION BEING IMPLEMENTED ON THE SCRUBBING SYSTEM. THE SYSTEM SHOULD BE READY FOR OPERATION FEB.1. THE UNIT MUST UNDER-

OPERATING HOURS				FGD OPERABILITY (%)
MONTH	BOILER	MODULE 3A	MODULE 4A	
				GO A SERIES OF TESTS TO INSURE COMPLIANCE WITH CITY AND FEDERAL REGULATIONS.

TABLE 3
PERFORMANCE DESCRIPTION FOR OPERATIONAL FGD SYSTEMS 12/76

IDENTIFICATION NO.	41
UTILITY NAME	KANSAS CITY POWER & LIGHT
UNIT NAME	HAWTHORN NO 4
UNIT LOCATION	KANSAS CITY MISSOURI
UNIT RATING	100 MW
FUEL CHARACTERISTICS	COAL 0.6- 3.0 PERCENT SULFUR
FGD VENDOR	COMBUSTION ENGINEERING
PROCESS	LIMESTONE INJECTION &WET SCRUB
NEW OR RETROFIT	RETROFIT
START UP DATE	8/72
FGD STATUS	OPERATIONAL
EFFICIENCY, PARTICULATES	99 PERCENT
SO2	70 PERCENT
WATER MAKE UP	OPEN LOOP 8.0 GPM/MW
SLUDGE DISPOSAL	UNSTABILIZED SLUDGE DISPOSED IN UNLINED POND
UNIT COST	$19/KW CAPITAL*2.2 MILS/KWH OP
OPERATIONAL EXPERIENCE	REFER TO THE BACKGROUND INFORMATION SECTION IN TABLE 3 OF THIS REPORT. THIS INJECTION AND TAIL-END WET SCRUBBING SYSTEM WAS DESIGNED AND INSTALLED BY COMBUSTION ENGINEERING AND PLACED IN SERVICE AUGUST 1972. FGD SYSTEM OPERATIONS DURING 1976 HAVE PROCEEDED ON AN INTERMITTENT BASIS. PROBLEMS ENCOUNTERED HAVE INCLUDED PLUGGING IN THE MARBLE BED AND REHEAT TUBE BUNDLES, DRAFT LOSSES THROUGH THE DUCTWORK AND PUMP FAILURES. THE UTILITY IS NOW CONVERTING THIS SYSTEM FROM LIMESTONE INJECTION TO LIME INJECTION AND TAIL-END WET SCRUBBING.

BACKGROUND INFORMATION

ON

THE HAWTHORN POEER STATION* UNIT NO. 4

THE HAWTHORN POWER STATION IS LOCATED ON THE NORTH BANK OF THE MISSOURI RIVER IN EAST KANSAS CITY, MISSOURI. THE PLANT HAS FIVE ELECTRIC GENERATING UNITS WITH A TOTAL RATED CAPACITY OF 980 MW. ONLY UNITS 3 AND 4 ARE RETROFITTED WITH FGD SYSTEMS.

BOILER 4 IS A BOTTOM PULVERIZED-COAL-FIRED UNIT MANUFACTURED BY COMBUSTION ENGINEERING AND INSTALLED IN EARLY 1950. THE PLANT BURNS TWO GRADES OF COAL* THE HIGH ASH COAL TYPICALLY CONTAINS 14 PERCENT ASH AND 3 PERCENT SULFUR WITH A HEAT CONTENT OF 11,400 BTU/LB* THE LOWER-ASH COAL HAS 11 PERCENT ASH, 0.6 PERCENT SULFUR, AND A HEAT CONTENT OF 9800 BTU/LB.

ORIGINALLY THE FGD SYSTEM OPERATED ON FURNACE INJECTION OF LIMESTONE FOLLOWED BY FLUE GAS WET-SCRUBBING SYSTEM IN WHICH BOTH THE SULFUR DIOXIDE AND THE FURNACE-CALCINED LIMESTONE ARE SCRUBBED AND ALLOWED TO REACT IN A REACTION TANK. BECAUSE OF FURNACE TUBES PLUGGING, WHICH WAS ATTRIBUTED TO LIMESTONE INJECTION, THE SYSTEM WAS CONVERTED IN 1972 TO TAILEND INJECTION, IN WHICH LIMESTONE IS INJECTED INTO THE GAS DUCT BETWEEN THE AIR HEATER AND THE SCRUBBER VESSEL.

THE FGD SYSTEM CONSISTS OF TWO IDENTICAL MODULES, EACH CAPABLE OF TREATING 500,000 ACFM OF FLUE GAS AT 300 F. BYPASSING OF THE MODULES IS POSSIBLE THROUGH A SYSTEM OF DUCTWORK AND DAMPERS AROUND EACH MODULE. EACH MODULE CONSISTS OF A GLASS MARBLE BED, A CHEVRON TYPE FIBERGLASS DEMISTER, AND A FINNED TUBE REHEATER.

THE DEMISTER WASH SYSTEM USES A SET OF EIGHT WATER LANCES THAT TURN ON AUTOMATICALLY TO WASH MUD FROM THE DEMISTERS WHENEVER THE DAMPERS CLOSE.

THE SPENT LIMESTONE SLURRY FROM ALL MODULES IS DISCHARGED INTO A CLARIFIER TANK, AND THE UNDERFLOW IS PUMPED, UNSTABILIZED, TO A 160-ACRE UNLINED POND, WHICH IS ALSO USED FOR DISPOSAL OF FLY ASH FROM THE OTHER BOILERS. A PROCESS FROM DIAGRAM OF THE MODIFIED LIMESTONE INJECTION AND TAIL-END WET SCRUBBING SYSTEM IS PRESENTED IN FIGURE 10 OF APPENDIX C.

BECAUSE OF CONTINUED OPERATIONAL PROBLEMS SINCE START-UP, THE OPERABILITY INDEX FOR THE SYSTEMS HAS BEEN LOW, (IN THE RANGE OF 30 PERCENT TO 40 PERCENT). AVAILABILITY OF THE FGD SYSTEM HAS BEEN HAMPERED BY MANY PROBLEMS ATTRIBUTED TO DRY LIMESTONE INJECTION.

OPERATING HISTORY

APART FROM THOSE ENTAILED IN SWITCHING OF UNIT 4 FROM FURNACE INJECTION TO TAIL GAS INJECTION, THE MAJOR PROBLEMS ENCOUNTERED WITH THE FGD SYSTEM ON BOILERS 3 AND 4 AT THE HAWTHORN POWER STATION HAVE BEEN IDENTICAL.

DIFFICULTY IN MAINTAINING SOLIDS IN THE REACTION TANKS IN SUSPENSION CAUSED BUILDUP OF MUD IN THE CORNERS OF THE REACTION

TANK. THE PROBLEM WAS SOLVED BY ROUNDING THE BOTTOM CORNERS, INSTALLING FRESH WATER FLUSHING NOZZLES ON EACH WALL, AND INCREASING THE HORSEPOWER OF THE TANK MIXERS.

IN LATE 1972, BECAUSE OF BOILER TUBE PLUGGING, WHICH WAS ATTRIBUTED TO FURNACE-LIMESTONE INJECTION, THE UNIT WAS CONVERTED TO A TAILEND LIMESTONE INJECTION SYSTEM. SEDIMENT BUILDUP OCCURRED IN THE DRAIN POTS HORIZONTAL HEADERS. ALSO, FREQUENT DISLOCATION OF THE MARBLE BED DRAIN POT COVERS AND CONSEQUENT LOSS OF MARBLES WAS SOLVED BY INSTALLING NEW STAINLESS STEEL DRAIN POTS WITH EXPANDED METAL COVERS AND MODIFYING THE POTS DRAIN PIPING. OTHER MODIFICATIONS INCLUDED INSTALLING A NEW DEMISTER WASH SYSTEM TO CONTROL DEMISTER PLUGGING, CHANGING THE FLUSHING SEQUENCE WITHIN THE WATER SEAL TO ELIMINATE BYPASS SEAL PLUGGING, AND REPLACING SPRAY NOZZLES. THESE MODIFICATIONS WERE COMPLETED BY APRIL 1974. ADDITIONAL MODIFICATIONS AND SYSTEM DESIGN CHANGES ARE CONTAINED IN THE COMMENTS SECTION OF THE OPERATING HISTORY SUMMARY FOR THIS INSTALLATION.

HAWTHORN NO. 4

MONTH	OPERATING HOURS BOILER	OPERATING HOURS MODULE 4A	OPERATING HOURS MODULE 4B	FGD OPERABILITY (%) MODULE A	FGD OPERABILITY (%) MODULE B	COMMENTS
JUL. 75	518	41	128	8	25	MARBLE BED PLUGGING AND STRAINER PROBLEMS ON BOTH MODULES.
AUG. 75		160	212			LOST HALF OF BOILER DUE TO NO. 4B I.D. FAN OUTAGE. BOTH FGD MODULES WERE SHUT DOWN TO ENSURE AGAINST THE LOSS OF THE ENTIRE UNIT. NEW CHEMISTRY - ATTEMPTING TO RUN AT 100% BLOWDOWN AND NEAR 0 PERCENT SOLIDS. EMPHASIS ON PARTICULATE CONTROL. MAINTAINING PH AT 5 WITHOUT LIMESTONE INJECTION.
SEP. 75	395	206	210	52	53	SCRUBBER MODULES WERE RETURNED TO SERVICE ON SEPT. 21 AFTER REPLACEMENT OF THE ORIGINAL I.D. FAN ON MODULE 4B SIDE. NEW PROCESS DESIGN - MARBLES REMOVED FROM SCRUBBER BED OF MODULE A AND REPLACED WITH A STAINLESS STEEL PERFORATED BED. THE MARBLES WERE REMOVED BECAUSE OF CONTINUING OPERATIONAL DIFFICULTIES. VERY GOOD PERFORMANCE RESULTED IN INCREASED AVAILABILITY AND CONTINUATION OF HIGH PARTICULATE REMOVAL EFFICIENCY (97 PERCENT).
OCT. 75	721	429	656	60	91	MINOR BOILER RESTRICTION ON THE MODULE 4A SIDE BETWEEN THE ECONOMIZER AND THE INLET DRAFT DUCTWORK CAUSED REDUCTION OF GAS VELOCITY. NEW CHEMISTRY PROCESS MODIFICATION OF RUNNING AT 100 PERCENT BLOWDOWN AND ZERO PERCENT SOLIDS IS STILL IN PROGRESS. SO2 REMOVAL EFFICIENCY IN THE 50 TO 60 PERCENT RANGE. KCP&L IS CONCENTRATING HEAVILY ON PARTICULATE EMISSION CONTROL.

MONTH	OPERATING HOURS BOILER	MODULE 4A	MODULE 4B	FGD OPERABILITY (%) MODULE A	MODULE B	COMMENTS
NOV. 75	720	0	713	0	99	MODULE 4A WAS SHUT DOWN DURING THE REPORT PERIOD BECAUSE OF LOSS OF DRAFT THROUGH THE DUCTWORK FROM THE ECONOMIZER TO THE AIR PREHEATER. THE REHEATER PLUGGED FREQUENTLY UNTIL THE SYSTEM WAS SHUT DOWN.
DEC. 75	640	0	103	0	16	BOILER OUTAGE OF 5 DAYS WAS DUE TO A SCHEDULED OVERHAUL.
JAN. 76	0	0	0	0	0	THE SYSTEM WAS DOWN ALL MONTH BECAUSE OF FROZEN EQUIPMENT AND LINES* MANPOWER WAS ASSIGNED TO A BOILER AND TURBINE OVERHAUL ON ANOTHER UNIT.
FEB. 76	579	0	450	0	78	MODULE 4A WAS SHUT DOWN THE ENTIRE MONTH BECAUSE OF CONTINUING LOSS OF DRAFT THROUGH THE DUCTWORK FROM THE ECONOMIZER TO THE AIR PREHEATER. MARBLE BED PLUGGING AND LOSS OF A RECYCLE PUMP OCCURRED ON MODULE 4B.
MAR. 76	706	0	24	0	3.4	DURING THE REPORT PERIOD THE UNIT'S BYPASS SEALS
APR. 76	550	231	220	42	40	WERE REPLACED WITH SLIDE-GATE DAMPERS.
MAY 76	365	99	99	27	27	THE UTILITY REPORTS THE B-SIDE REHEATER IS STILL
JUN. 76	460	294	23	65	5	EXPERIENCING PLUGGING PROBLEMS. ONE SECTION OF THE REHEAT TUBE BUNDLES HAS BEEN REMOVED IN ORDER TO FACILITATE CLEANING AND MAINTENANCE.
JUL. 76						CURRENTLY, THE UTILITY IS IN THE PROCESS OF
AUG. 76						MODIFYING THE SCRUBBING SYSTEM FROM A LIMESTONE INJECTION AND TAIL END BASED SYSTEM TO A LIME

HAWTHORN NO. 4 (CONTINUED)

MONTH	BOILER	MODULE 4A	MODULE 4B	MODULE A	MODULE B	COMMENTS
						SLURRY BASED SYSTEM.
SEP. 76						THE SYSTEM WAS VIRTUALLY OUT OF SERVICE THE
OCT. 76						ENTIRE REPORT PERIOD. OPERATIONS AND MANPOWER COMMITMENTS WERE SERIOUSLY HAMPERED BY A MAJOR EXPLOSION WHICH OCCURRED IN THE COAL MILL PULVERIZING AREA OF HAWTHORN NO. 5.
NOV. 76	486	442	0	91	0	THE UTILITY IS IN THE PROCESS OF CONVERTING THE
DEC. 76	0	0	0	0	0	SYSTEM TO A WET-LIME SCRUBBING SYSTEM. START-UP IN THE LIME SCRUBBING MODE WILL COMMENCE THE FIRST PART OF JANUARY.

TABLE 3
PERFORMANCE DESCRIPTION FOR OPERATIONAL FGD SYSTEMS 12/76

IDENTIFICATION NO.	42
UTILITY NAME	KANSAS CITY POWER & LIGHT
UNIT NAME	LA CYGNE NO 1
UNIT LOCATION	LA CYGNE KANSAS
UNIT RATING	820 MW
FUEL CHARACTERISTICS	COAL 5.0 PERCENT SULFUR
FGD VENDOR	BABCOCK & WILCOX
PROCESS	LIMESTONE SCRUBBING
NEW OR RETROFIT	NEW
START UP DATE	2/73
FGD STATUS	OPERATIONAL
EFFICIENCY, PARTICULATES	98 PERCENT
SO2	76 PERCENT
WATER MAKE UP	OPEN LOOP 1.4 GPM/MW
SLUDGE DISPOSAL	UNSTABILIZED SLUDGE DISPOSED IN UNLINED POND
UNIT COST	$52/KW CAPITAL * 0.94 MILLS/ KWH OPERATING COSTS
OPERATIONAL EXPERIENCE	REFER TO THE BACKGROUND INFORMATION SECTION IN TABLE 3 OF THIS REPORT. THIS 7-MODULE FGD SYSTEM HAS BEEN IN OPERATION SINCE FEBRUARY 1973. THE ANNUAL SYSTEM OPERABILITY INDEX VALUE AVERAGED IN EXCESS OF 76 PERCENT FOR 1974. ANNUAL AVERAGE AVAILABILITY INDEX VALUES FOR 1975 AND 1976 EXCEEDED 84 PERCENT AND 91 PERCENT,RESPECTIVELY. THE NO.1 UNIT WAS IN SERVICE THROUGHOUT THE REPORT PERIOD, ACHIEVING AVERAGE AVAILABILITY INDEX VALUES OF 94 AND 90 PERCENT FOR THE MONTHS OF NOVEMBER AND DECEMBER, RESPECTIVELY.

BACKGROUND INFORMATION

ON

LA CYGNE UNIT NO. 1

THE LA CYGNE POWER STATION OF KANSAS CITY POWER AND LIGHT COMPANY BEGAN COMMERCIAL OPERATION ON JUNE 1, 1973, AS A JOINT PROJECT OF KANSAS GAS AND ELECTREC COMPANY AND KANSAS CITY POWER & LIGHT COMPANY. THE STATION IS LOCATED ABOUT 55 MILES SOUTH OF KANSAS CITY, IN LINN COUNTY, KANSAS.

ELECTRIC POWER GENERATING FACILITIES CONSIST OF ONE 820 MW COAL-FIRED BASE-LOAD BOILER WITH ASSOCIATED STEAM TURBINES AND ELECTRIC GENERATORS. THE PLANT HAS THREE OIL-FIRED BOILERS, USED PRIMARILY FOR STARTUP OF THE LARGE UNIT. THEIR COMBINED CAPACITY IS EQUIVALENT TO 28 MW.

THE BOILER AT LA CYGNE, DESIGNED BY BABCOCK AND WILCOX, IS A DRY-BOTTOM, PULVERIZED-COAL-FIRED CYCLONE UNIT. THE COAL BURNED IS LOW-GRADE, SUBBITUMINOUS, WITH AN AS-FIRED HEATING VALUE OF 9000 TO 9700 BTU/LB AND ASH AND SULFUR CONTENTS OF 25 PERCENT AND 5 PERCENT, RESPECTIVELY. POLLUTION CONTROL EQUIPMENT ON THIS BOILER CONSISTS OF SEVEN SCRUBBING MODULES, FOR THE CONTROL OF PARTICULATE AND SULFUR DIOXIDE EMISSIONS. THIS SCRUBBING SYSTEM WAS DESIGNED AND CONSTRUCTED BY BABCOCK AND WILCOX AS AN INTEGRAL PART OF THE POWER GENERATING FACILITIES. BYPASSING OF THE BOILER'S FLUE GAS AROUND THE FGD SYSTEM IS NOT POSSIBLE. A PROCESS FLOW DIAGRAM OF THE LA CYGNE AIR QUALITY CONTROL SYSTEM AND RELATED MAJOR EQUIPMENT IS PRESENTED IN FIGURE 10.

PROBLEMS AND SOLUTIONS

THE FGD INSTALLATION HAS BEEN PLAGUED WITH NUMEROUS PROBLEMS SINCE THE FIRST TRIAL OPERATION ON DECEMBER 26, 1972. SOME OF THESE PROBLEMS, SUCH AS VIBRATIONS OF THE INDUCED-DRAFT FANS AND THEIR SENSITIVITY TO IMBALANCE, OCCURRED EVEN BEFORE THE BOILER WAS FIRED. AS THESE FABRICATION PROBLEMS WERE CORRECTED AND THE FGD SYSTEM WENT INTO OPERATION, TWO OTHER TYPES OF PROBLEMS APPEARED. THE FIRST TYPE, ASSOCIATED WITH THE WET LIMESTONE PROCESS, INCLUDED PLUGGING OF THE DEMISTER AND STRAINERS, WEARING OF SPRAY NOZZLES, AND CORROSION OF REHEATER TUBES. PROBLEMS OF THE SECOND TYPE MAY BE UNIQUE TO THE LA CYGNE INSTALLATION IN THAT THEY CONCERN THE EFFECT OF THE SCRUBBED FLY ASH ON VISCOSITY AND FLOW CHARACTERISTICS OF THE RECIRCULATED SLURRY, WHICH RESTRICTED THE MOBILITY OF THE BALLS IN THE ORIGINAL TCA TOWER. THE FLY ASH CONTENT OF THE FLUE GAS (DUE TO LACK OF PRIMARY PARTICULATE CONTROLS) IS LARGELY RESPONSIBLE FOR BOTH TYPES OF PROBLEMS. SEVERAL MODIFICATIONS HAVE BEEN MADE* THE ORIGINAL TURBULENT CONTACT ABSORBER'S FLOATING BED WAS REPLACED WITH SIEVE TRAYS NEXT, IN ORDER ALSO TO REDUCE THE EROSIVE EFFECT OF FLY ASH AND LARGE-SCALE PARTICLES AND TO EXTEND THE LIFE OF THE LIMESTONE SLURRY SPRAY NOZZLES ON THE VENTURI SCRUBBERS, A HYDROCLONE WAS INSTALLED IN THE SLURRY RECIRCULATION LINE OF EACH MODULE TO CENTRIFUGALLY SEPARATE AND REMOVE THESE PARTICLES FROM THE SYSTEM.

THE CORROSION ASSOCIATED WITH CONDENSATION OF ACID VAPORS FROM THE GAS ON THE REHEATER TUBE BUNDLES WAS CONTROLLED BY

INJECTION OF SLIP STREAMS OF HOT AIR FROM THE BOILER'S COMBUSTION AIR HEATER INTO THE SCRUBBED FLUE GASES AT THE INLET TO THE REHEATER UNITS. THIS PRACTICE HAS REDUCED THE MAXIMUM GENERATING CAPACITY OF THE BOILER BY LIMITING THE AIR AVAILABLE FOR COAL COMBUSTION.

BECAUSE THE FGD SYSTEM INCLUDES NO SPARE MODULES AND IT CANNOT BE BYPASSED, OUTPUT OF THE BOILER IS TOTALLY CONTROLLED BY PERFORMANCE AND AVAILABILITY OF THE FGD MODULES. PRESENT PROCEDURES CALL FOR CLEANING ONE MODULE EACH NIGHT ON A ROTATIONAL SCHEDULE AND KEEPING ALL MODULES AVAILABLE DURING THE DAYTIME PEAK PERIODS. CLEANOUTS REQUIRE THREE MEN FOR A PERIOD OF 10 TO 12 HOURS. RECENT MODIFICATIONS BY THE UTILITY ON THE SCRUBBER INSTALLATION HAVE RESULTED IN PLANS FOR PROLONGED OPERATIONAL PERIODS, WITH MODULES STAYING ON-LINE CONTINUOUSLY FOR PERIODS UP TO 3 WEEKS. THIS PREVENTATIVE MAINTENANCE AND CLEANOUT SCHEDULE HAS, TO DATE, NOT YET BEEN ADOPTED.

THE UTILITY IS CURRENTLY PLANNING ADDITIONAL SYSTEM MODIFICATIONS, INCLUDING THE INSTALLATION OF AN EIGHTH SCRUBBING MODULE SCHEDULED TO BE IN SERVICE THE SUMMER OF 1977. THE ADDITIONAL MODULE IS ESTIMATED TO COST APPROXIMATELY $5.2 MILLION AND WILL ENABLE THE PLANT TO INCREASE ITS MAXIMUM CONTINOUS GENERATING CAPACITY FROM THE CURRENT 700 MW LEVEL TO 800 MW. THE ORIGINAL AIR QUALITY CONTROL SYSTEM DESIGN ALLOTTED ADDITIONAL SPACE FOR JUST SUCH A SYSTEM EXPANSION. OTHER SYSTEM MODIFICATIONS INCLUDE* CHANGING THE I.D. FANS IN ORDER TO MINIMIZE OR ELIMINATE A FAN PARALLELING PROBLEM* CONTINUATION OF EXPERIMENTS AND MINOR CHANGES IN ORDER TO IMPROVE SYSTEM MECHANICAL EFFICIENCY AND DECREASE OPERATING EXPENSES.

FGD SYSTEM AVAILABILITY

LA CYGNE UNIT NO. 1

MONTH	BOILER HOURS	PERCENT AVAILABLITY-BY MODULE A	B	C	D	E	F	G	AVERAGE
JAN. 74		49	32	44	87	23	37	81	50
FEB. 74		66	68	59	76	52	100	65	69
MAR. 74					BOILER SHUTDOWN				
APR. 74		67	70	75	88	74	100	88	80
MAY 74		69	83	78	85	78	84	80	80
JUN. 74		92	84	83	90	82	83	87	86
JUL. 74		75	80	80	81	85	79	77	80
AUG. 74		90	90	73	81	81	78	99	85
SEP. 74		69	88	73	76	83	89	86	81
OCT. 74		90	71	60	61	84	85	84	76
NOV. 74		90	71	60	61	84	85	84	76
DEC. 74					BOILER SHUTDOWN				
JAN. 75					BOILER SHUTDOWN				
FEB. 75					BOILER SHUTDOWN				
MAR. 75	694	82	96	90	76	93	92	96	90
APR. 75					5 DAYS OF OPERATION				
MAY. 75	683	95	85	94	90	90	89	83	89
JUN. 75	667	88	85	84	85	84	86	89	86
JUL. 75	590	78	90	90	84	85	87	85	86
AUG. 75	630	75	88	87	78	92	85	83	84

COMMENTS

NOTE* THE 1974 FIGURES ARE BASED UPON ACTUAL SYSTEM OPERATION HOURS AS A FUNCTION OF ACTUAL BOILER HOURS. DURING REDUCED LOAD CONDITIONS SOME OF THE MODULES WERE NOT REQUIRED AND THEREFORE SHUT DOWN, ALTHOUGH THEY WERE AVAILABLE. AVAILABILITY WAS THEREFORE HIGHER THAN SOME OF THE POSTED FIGURES INDICATE. 1975 FIGURES ARE BASED UPON SYSTEM AVAILABLE HOURS AS A FUNCTION OF HOURS IN THE PERIOD.

MODULES A AND D ARE USED FOR RESEARCH TESTS. ONE MODULE IS SHUT DOWN EACH EVENING FOR CLEANING.

FGD SYSTEM AVAILABILITY (CONTINUED)

LA CYGNE UNIT NO. 1

MONTH	BOILER HOURS	PERCENT AVAILABLITY-BY MODULE A	B	C	D	E	F	G	AVERAGE	COMMENTS
SEP. 75	610	78	84	84	85	79	78	74	80	SYSTEM SHUTDOWN OCT. 16, 1975 OWING TO PROBLEMS WITH GENERATOR AND I.D. AIR FAN. SYSTEM REMAINED INOPERATIVE THROUGHOUT THE MONTH.
OCT. 75	231	66	77	46	74	72	73	65	68	AVAILABILITY FIGURES FOR OCTOBER AND NOVEMBER DO NOT INCLUDE THE OUTAGE TIME FROM OCTOBER 16 TO NOVEMBER 13. BOILER OUTAGES OF 80, 50, AND 11 HOURS, TOTALING 141 HOURS, OCCURRED DURING DECEMBER.
NOV. 75	346	93	90	80	93	96	89	94	91	
DEC. 75	597	91	87	81	85	87	89	84	86	
JAN. 76	618	86	85	91	72	84	52	84	83	
FEB. 76	594	94	90	86	91	92	93	95	92	
MAR. 76	643	92	90	88	93	94	91	91	91	
APR. 76					BOILER OVERHAUL					THE SYSTEM WAS SHUT DOWN ON APRIL 6 FOR A SCHEDULED BOILER AIR PREHEATER AND STACK BREECHING OVERHAUL. DURING THIS OUTAGE SOME MAINTENANCE WAS PERFORMED ON THE SCRUBBER DUCTWORK, PRIMARILY BECAUSE OF CORROSION PROBLEMS.
MAY 76	436	96	92	93	96	89	95	96	94	THE SCHEDULED UNIT OUTAGE ENDED MAY 10 WHEN THE SYSTEM WAS RESTARTED. DURING THE REMAINDER OF THE MONTH FOUR UNIT OUTAGES WERE ENCOUNTERED, TOTALING OVER 70 HOURS.

FGD SYSTEM AVAILABILITY (CONTINUED)

LA CYGNE UNIT NO. 1

MONTH	BOILER HOURS	PERCENT AVAILABLITY-BY MODULE A	B	C	D	E	F	G	AVERAGE	COMMENTS
JUN. 76		93	94	94	95	93	93	91	93	FOUR FORCED MINOR SCRUBBER OUTAGES OCCURED DURING THE MONTH, RESULTING IN A TOTAL AVERAGE SYSTEM AVAILABILITY OF 93.33 PERCENT.
JUL. 76		96	95	92	93	93	94	94	94	THE UNIT RECORDED ITS LARGEST MW-HOUR MONTH SINCE INITIATION OF COMMERCIAL OPERATION. TWO MINOR SCRUBBER OUTAGES OCCURRED DURING THE MONTH.
AUG. 76		94	93	92	94	92	90	88	92	THE SYSTEM WAS TAKEN OUT OF SERVICE AUGUST 24 FOR REPAIR OF A TURBINE BLADE. THE UTILITY TOOK ADVANATAGE OF THIS OUTAGE PERIOD TO PROCEED WITH COATING THE STACK INNER STRUCTURE WITH PLASTITE 4005. THE AUGUST AVAILABILITY FIGURES DO NOT INCLUDE THIS OUTAGE TIME.
SEP. 76				TURBINE REPAIR						UNIT NO. 1 REMAINED OUT OF SERVICE ALL OF SEPTEMBER AND THE FIRST THREE WEEKS OF OCTOBER BECAUSE OF COMPLETION TO TURBINE BLADE REPAIRS WHICH COMMENCED ON AUGUST 24. THE SYSTEM WAS RETURNED TO SERVICE ON OCTOBER 20. OPERATION WAS INTERMITTENT PENDING TURBINE BLADE REBALANCING AND RE-ESTABLISHMENT OF NORMAL OPERATING CONDITIONS.
OCT. 76				TURBINE REPAIR						

FGD SYSTEM AVAILABILITY (CONTINUED)

LA CYGNE UNIT NO. 1

MONTH	BOILER HOURS	PERCENT AVAILABILITY - BY MODULE A	B	C	D	E	F	G	AVERAGE
NOV.76	627	95	93	94	95	94	93	94	94
DEC.76	706	87	89	81	94	94	95	91	90

COMMENTS

DURING THE MONTH OF DECEMBER THE UTILITY CONDUCTED SOME MINOR REPAIR AND MODIFICATION WORK ON THE AQCS. SPECIFICALLY A-MODULE EXPERIENCED SOME VENTURI RECYCLE PUMP PROBLEMS AND THE C-MODULE'S REHEAT STEAM TUBE BUNDLES WERE INCREASED IN NUMBER FROM

TABLE 3
PERFORMANCE DESCRIPTION FOR OPERATIONAL FGD SYSTEMS 12/76

IDENTIFICATION NO.	45
UTILITY NAME	KANSAS POWER & LIGHT
UNIT NAME	LAWRENCE NO 4
UNIT LOCATION	LAWRENCE KANSAS
UNIT RATING	125 MW
FUEL CHARACTERISTICS	COAL 0.5 PERCENT SULFUR
FGD VENDOR	COMBUSTION ENGINEERING
PROCESS	LIMESTONE INJECTION &WET SCRUB
NEW OR RETROFIT	RETROFIT
START UP DATE	12/68
FGD STATUS	OPERATIONAL
EFFICIENCY, PARTICULATES	99 PERCENT
SO2	75 PERCENT
WATER MAKE UP	OPEN LOOP 1.4 GPM/MW
SLUDGE DISPOSAL	UNSTABILIZED SLUDGE DISPOSED IN UNLINED POND
UNIT COST	
OPERATIONAL EXPERIENCE	REFER TO BACKGROUND INFORMATION SECTION IN TABLE 3 OF THIS REPORT. THE ORIGINAL FGD SYSTEM FOR THIS UNIT WAS PLACED IN SERVICE DECEMBER 1968. IN ACHIEVING AN OPTIMUM MODE OF OPERATION, THE PHYSICAL SCRUBBER PLANT WAS CONSUMED, REQUIRING REPLACEMENT WITH A NEW VENTURI ROD SCRUBBER AND SPRAY TOWER ABSORBER SYSTEM SUPPLIED BY COMBUSTION ENGINEERING.INSTALLATION OF THE NEW SYSTEM IS COMPLETE.INITIAL OPERATION SHOULD COMMENCE IN THE EARLY PART OF 1977. THE UNIT WAS DOWN THROUGH-OUT THE REPORT PERIOD BECAUSE OF A SCHEDULED TURBINE OVERHAUL.

BACKGROUND INFORMATION

ON

THE LAWRENCE POWER STATION* UNIT NO. 4

LAWRENCE POWER STATION'S UNIT NO. 4 IS A CYCLIC LOAD STEAM BOILER EQUIPPED TO BURN COAL, NATURAL GAS SUPPLEMENTED WITH OIL, OR COMBINATIONS OF THESE THREE FUELS. THE BOILER WAS BUILT BY COMBUSTION ENGINEERING AND PLACED IN SERVICE IN 1959. GENERATING CAPACITY VARIES FROM 125 MW TO 143 MW WITH THE TYPE OF FUEL BEING BURNED. RETROFITTING WITH AN FGD SYSTEM IN NOVEMBER 1968 INTRODUCED ADDITIONAL PRESSURE DROP IN THE FLUE GAS SYSTEM AND REDUCED BOILER CAPACITY TO 115 MW.

THE COAL NOW BURNED AT THE LAWRENCE POWER PLANT IS A LOW-SULFUR SOUTHEAST WYOMING COAL, HAVING AN AVERAGE HEATING VALUE OF 10,000 BTU/LB AND SULFUR AND ASH CONTENTS OF 0.5 AND 11 PERCENT RESPECTIVELY.

THE ORIGINAL SCRUBBING SYSTEM INCLUDED TWO MODULES, EACH SIZED TO HANDLE 150,000 SCFM OF FLUE GAS. EACH MODULE CONTAINS A SINGLE-STAGE MARBLE BED SCRUBBER FOLLOWED BY A CHEVRON DEMISTER AND INDIRECT STEAM REHEATER. ORIGINALLY, BOTH MODULES WERE FITTED WITH BYPASS DUCTS AND HYDRAULIC SEAL DAMPERS, WHICH WERE LATER REMOVED BECAUSE OF EXTENSIVE CORROSION AND PLUGGING.

THE PLANT HAS FACILITIES FOR STORING AND MILLING THE LIMESTONE, WHICH CONTAINS 93 PERCENT CALCIUM CARBONATE, 6 PERCENT SILICA, AND 1 PERCENT MAGNESIUM CARBONATE.

SPENT SLURRY DISCHARGED FROM THE ORIGINAL SYSTEMS FITTED ON UNITS 4 AND 5 WERE SENT TO THREE INTERCONNECTED UNLINED DISPOSAL PONDS WITH CAPACITIES OF 16, 28, AND 4 ACRES, RESPECTIVELY. KANSAS RIVER WATER (MAKE-UP) WAS ADDED TO THE LATTER POND. THE SUPERNATANT FROM THIS POND WAS RECYCLED. THE UNSTABILIZED SLUDGE SOLIDIFIED AND SET-UP IN THE DISCHARGE PONDS.

PROBLEMS AND SOLUTIONS

PROBLEMS WITH THE FGD SYSTEM ON BOILER NO. 4 HAVE INCLUDED BUILDUP AND PLUGGING OF THE INLET DUCT WHERE HOT GASES ENTER THE SCRUBBERS, EROSION OF SCRUBBERS WALLS, CORROSION OF SCRUBBERS INTERNALS, BUILDUP ON ID FAN ROTORS, AND PLUGGING OF DRAIN LINES, MARBLE BEDS, AND DEMISTERS. LOW SO_2 REMOVAL WAS CAUSED BY OVERBURNING OF THE LIMESTONE AND DROPOUT OF THE LIME WITH THE ASH IN THE BOTTOM OF THE SCRUBBER.

THE SCRUBBERS WERE MODIFIED IN 1969 BY RAISING THE DEMISTER AND ADDING SOOT BLOWERS IN THE INLET DUCT AND REHEATER TO REDUCE PLUGGING. NEW SPRAY NOZZLES WERE ALSO INSTALLED. REHEATER PLUGGING WAS ELIMINATED BY REPLACING COPPER REHEAT COILS WITH A CARBON STEEL UNIT HAVING WIDELY SPACED FINS.

MAJOR MODIFICATIONS IN 1970 WERE SANDBLASTING AND COATING OF THE INTERIOR OF THE SCRUBBERS, REPLACEMENT OF ALL INTERNAL STEEL PIPES WITH PLASTIC AND FIBERGLASS, AND REPLACEMENT OF STAINLESS STEEL DEMISTERS WITH FIBERGLASS. SINCE DEMISTER PLUGGING WAS NOT COMPLETELY ELIMINATED, THE UNIT WAS WASHED MANUALLY EVERY NIGHT TO MAINTAIN THE REQUIRED OUTPUT.

LAWRENCE UNIT NO. 4 (CONTINUED)

THE MODIFICATIONS IN THE SUMMER OF 1972 ON THE TWO FGD MODULES INCLUDED ENLARGEMENT OF THE CRYSTALLIZATION TANK, AND INSTALLATION OF NEW PLASTIC SPRAY NOZZLES, NEW SLURRY PUMPS AND STRAINERS, AND NEW MULTIPLE MIXERS IN THE TANK.

PROBLEMS THAT REMAINED INCLUDED CORROSION, INEFFICIENT DAMPERS, EXPANSION JOINT FAILURE, DEMISTER FOULING, RAPID EROSION OF THE SLURRY PUMP, AND VALVE FAILURE. OPERATION OF THE FGD SYSTEM SINCE THE FALL OF 1973 HAS BEEN THE MOST SUCCESSFUL TO DATE.

OPERATION OF THE SCRUBBER SYSTEM ON THE WYOMING COAL HAS PROVED TO BE MORE EFFICIENT AND ECONOMICAL THAN EARLIER OPERATIONS BECAUSE A LESSER DEGREE OF SO2 REMOVAL IS REQUIRED FOR COMPLIANCE. THE SCRUBBER SYSTEM IS STILL OPERATING IN THE HIGH-SOLIDS MODE AS AN SO2 AND PARTICULATE REMOVAL SYSTEM. NORMAL MANUAL CLEANING REQUIREMENTS HAVE BEEN REDUCED TO TWO 4-HOUR SHIFTS PER SCRUBBER PER WEEK.

IN 1974 THIS UNIT WAS AVAILABLE FOR OPERATION 343 DAYS. FIFTY PERCENT OF THE FUEL CONSUMED WAS COAL, 2 PERCENT FUEL OIL, AND 48 PERCENT NATURAL GAS. DURING 1975 THIS UNIT WAS AVAILABLE FOR OPERATING 333 DAYS. SIXTY-FOUR PERCENT OF THE FUEL CONSUMED WAS COAL, 3 PERCENT FUEL OIL, AND 33 PERCENT NATURAL GAS.

BY LATE 1976, THE ORIGINAL EMISSION CONTROL SYSTEM WAS REPLACED WITH A NEW ELECTROSTATIC PRECIPITATOR FOR PARTICULATE CONTROL AND A ROD AND SPRAY TOWER SCRUBBER. INFORMATION ON THE ORIGINAL AND REPLACEMENT SYSTEM IS GIVEN IN THE FOLLOWING TABLE.

MONTH	BOILER	OPERATING HOURS MODULE A	OPERATING HOURS MODULE B	AVAILABILITY MODULE A	AVAILABILITY MODULE B	COMMENTS
						THE FGD SYSTEM HAS OPERATED SATISFACTORILY FOR OVER A YEAR. AVAILABILITY IS REPORTED TO BE ADEQUATE FOR THE OPERATION OF THIS STATION. STATION LOAD IS REDUCED TO 50 PERCENT EVERY NIGHT. THEREFORE, ONE OF THE MODULES CAN BE TAKEN OFF-LINE NIGHTLY FOR CLEANING OR REPAIR. WYOMING COAL (0.5 PERCENT SULFUR) IS BEING BURNED IN THE BOILER. SOME NATURAL GAS HAS BEEN BURNED SINCE JUNE 20.
JUL. 75		NOT LOGGED				BURNED COAL 100 PERCENT OF TIME. EACH MODULE SHUT DOWN ONCE PER WEEK FOR INSPECTION AND CLEAN-UP. NO BOILER OUTAGES OCCURRED DURING THE JULY-AUGUST PERIOD.
AUG. 75						
SEP. 75		NOT LOGGED				
OCT. 75						
NOV. 75		NOT LOGGED				
DEC. 75						
JAN. 76		NOT LOGGED				PRESENT PROJECTIONS BY THE UTILITY CALL FOR THIS UNIT TO BE AVAILABLE 330 DAYS DURING 1976. THE FUEL CONSUMPTION WILL BE 80 PERCENT COAL, 12 PERCENT NATURAL GAS, AND 8 PERCENT FUEL OIL. THE UTILITY IS REPLACING THIS SCRUBBER SYSTEM WITH A VENTURI-ROD FOLLOWED BY A SPRAY TOWER.
FEB. 76						
MAR. 76						
APR. 76						
MAY 76						NO INFORMATION WAS REPORTED BY THE UTILITY FOR THE PERIOD.
JUN. 76						
JUL. 76						NO INFORMATION WAS REPORTED BY THE UTILITY FOR THE PERIOD.
AUG. 76						

LAWRENCE NO. 4

MONTH	BOILER	OPERATING HOURS MODULE A	OPERATING HOURS MODULE B	AVAILABILITY MODULE A	AVAILABILITY MODULE B	COMMENTS
SEP. 76						
OCT. 76						
NOV. 76		TURBINE OVERHAUL AND REPAIR				THE UTILITY REPORTS THAT THE UNIT REMAINED OUT OF SERVICE THROUGHOUT THE REPORT PERIOD AS A SCHEDULED TURBINE OVERHAUL, WHICH COMMENCED IN MID-SEPTEMBER, CONTINUED. THE NEW EMISSION CONTROL SYSTEM, CONSISTING OF AN ESP FOLLOWED BY A ROD SECTION AND SPRAY TOWER SCRUBBING SYSTEM, HAS BEEN INSTALLED ON THIS UNIT. INITIAL OPERATION OF THE SYSTEM WILL COMMENCE FOLLOWING COMPLETION OF THE TURBINE OVERHAUL. THE UNIT WILL CONTINUE TO FIRE LOW SULFUR WYOMING COAL (0.5% SULFUR* 10,000 BTU/LB).
DEC. 76						

TABLE 3
PERFORMANCE DESCRIPTION FOR OPERATIONAL FGD SYSTEMS 12/76

IDENTIFICATION NO.	46
UTILITY NAME	KANSAS POWER & LIGHT
UNIT NAME	LAWRENCE NO 5
UNIT LOCATION	LAWRENCE KANSAS
UNIT RATING	400 MW
FUEL CHARACTERISTICS	COAL 0.5 PERCENT SULFUR
FGD VENDOR	COMBUSTION ENGINEERING
PROCESS	LIMESTONE INJECTION &WET SCRUB
NEW OR RETROFIT	NEW
START UP DATE	11/71
FGD STATUS	OPERATIONAL
EFFICIENCY, PARTICULATES	99 PERCENT
SO2	65 PERCENT
WATER MAKE UP	OPEN LOOP 3.0 GPM/MW
SLUDGE DISPOSAL	UNSTABILIZED SLUDGE DISPOSED IN UNLINED POND
UNIT COST	
OPERATIONAL EXPERIENCE	REFER TO BACKGROUND INFORMATION SECTION IN TABLE 3 OF THIS REPORT. THE ORIGINAL FGD SYSTEM FOR THIS UNIT WAS PLACED IN SERVICE NOVEMBER 1971 RENTLY BURNING LOW SULFUR WYOMING COAL. THE OPERATION OF THE SCRUBBER HAS IN ACHIEVING AN OPTIMUM MODE OF OPERATION. THE PHYSICAL SCRUBBER PLANT WAS CONSUMED, REQUIRING REPLACEMENT WITH TWO NEW VENTURI ROD SCRUBBERS AND SPRAY TOWER ABSORBERS SUPPLIED BY COMBUSTION ENGINEERING. IS PROCEEDING ON POURING OF THE FOUNDATION AND ERECTION OF THE STRUCTURAL STEEL. THE BOILER IS IN SERVICE, FIRING FUEL OIL.

BACKGROUND INFORMATION

ON

THE LAWRENCE POWER STATION* UNIT NO. 5

UNIT NO. 5 AT LAWRENCE POWER STATION IS A CYCLIC-LOAD STEAM BOILER EQUIPPED TO BURN COAL, NATURAL GAS SUPPLEMENTED WITH OIL, OR COMBINATIONS OF THESE FUELS. THE BOILER, PLACED IN SERVICE IN 1971, HAS A RATED CAPACITY OF 400 MW WHEN BURNING COAL AND NATURAL GAS.

THE COAL NOW BURNED AT THE LAWRENCE POWER PLANT IS A LOW-SULFUR SOUTHEAST WYOMING COAL, HAVING AN AVERAGE HEATING VALUE OF 10,000 BTU/LB AND SULFUR AND ASH CONTENTS OF 0.5 AND 11 PERCENT RESPECTIVELY.

THE BOILER'S ORIGINAL FGD SYSTEM WAS SUPPLIED BY COMBUSTION ENGINEERING AND PLACED IN SERVICE IN 1971. ORIGINAL EQUIPMENT INCLUDED 8 IDENTICAL MODULES WITH A CAPACITY OF 150,000 SCFM/MODULE. EACH MODULE CONSISTS OF A SINGLE-STAGE MARBLE BED SCRUBBER FOLLOWED BY A CHEVRON-TYPE DEMISTER AND INDIRECT STEAM REHEATER. ALL THE MODULES ARE FITTED WITH BY-PASS DUCTS AND HYDRAULIC SEAL DAMPERS. THE PLANT INCLUDES FACILITIES FOR STORING AND MILLING LIMESTONE (COMPOSITION* 93 PERCENT CALCIUM CARBONATE, 6 PERCENT SILICA, AND 1 PERCENT MAGNESIUM CARBONATE).

SPENT SLURRY FROM THE UNIT ALONG WITH THE SLURRY FROM UNIT NO. 4 IS SENT TO THREE INTERCONNECTED UNLINED SLUDGE DISPOSAL PONDS OF 16, 28, AND 4 ACRES. COOLING TOWER BLOWDOWN SUPPLIES MAKE-UP WATER TO THE POND SYSTEM. CLARIFIED POND WATER IS RECYCLED. THE SLUDGE IS NOT TREATED FURTHER AND IS REPORTED TO SET AND SOLIDIFY IN THE PONDS.

PROBLEMS AND SOLUTIONS

PROBLEMS WITH THE FGD SYSTEM ON BOILER NO. 5 WERE SIMILAR PROBLEMS TO THOSE OF THE SYSTEM ON BOILER NO. 4* LOCALIZED CORROSION IN SOME EQUIPMENT, UNSATISFACTORY DAMPER OPERATION, DEMISTER FOULING, EXPANSION JOINT FAILURE, AND RAPID WEAR OF SLURRY-RECIRCULATING PUMPS. IN ADDITION TO THESE PROBLEMS, BOILER NO. 5 IS PLAGUED WITH POOR FLUE GAS DISTRIBUTION TO THE EIGHT FGD MODULES WHICH, UNLIKE THE MODULES ON BOILER NO. 4 ARE ALL INTERCONNECTED TO A COMMON STACK.

FGD SYSTEM AVAILABILITY WAS ADEQUATE FOR THE OPERATION OF THIS STATION. BECAUSE THE STATION LOAD WAS REDUCED TO FIFTY PERCENT, AS MANY AS FOUR MODULES WERE SHUT DOWN FOR CLEANING AND REPAIR EACH EVENING.

OPERATION OF THE SCRUBBER SYSTEM ON WYOMING COAL HAS PROVED TO BE MORE EFFICIENT AND ECONOMICAL BECAUSE OF THE LESSER DEGREE OF SO2 REMOVAL REQUIRED.

IN 1974 THE UNIT WAS AVAILABLE FOR OPERATION 338 DAYS* 66 PERCENT OF THE FUEL CONSUMED WAS NATURAL GAS, 27 PERCENT COAL, AND 6 PERCENT FUEL OIL. DURING 1975 THE UNIT WAS AVAILABLE FOR OPERATION 352 DAYS, FUEL CONSUMPTION WAS 45 PERCENT NATURAL GAS, 42 PERCENT COAL, AND 13 PERCENT FUEL OIL.

LAWRENCE UNIT NO. 5 (CONTINUED)

THE UTILITY HAS RE-EVALUATED THE FUTURE OF SCRUBBING APPLICATION ON THIS POWER-GENERATING UNIT. THE UTILITY IS NOW FOLLOWING A COURSE SIMILAR TO THAT OF UNIT 4, CONVERTING THE MARBLE BED SCRUBBERS TO A TWO TRAIN ROD AND SPRAY TOWER SCRUBBING SYSTEM. ADDITIONAL DATA AND INFORMATION ON THE DEVELOPMENT OF FGD TECHNOLOGY FOR THIS UNIT IS PRESENTED IN THE PERFORMANCE TABLE BELOW

MONTHS	OPERATING HOURS BOILER	OPERATING HOURS FGD MODULES	COMMENTS
			WYOMING COAL IS BEING BURNED IN THIS UNIT. FGD SYSTEM AVAILABILITY IS REPORTED TO BE ADEQUATE FOR OPERATION OF THIS STATION. SINCE STATION LOAD IS REDUCED TO 50 PERCENT EVERY NIGHT, AS MANY AS FOUR MODULES CAN BE SHUT DOWN FOR CLEANING AND REPAIR EACH EVENING.
			FGD UNITS WERE OFF-LINE MOST OF JUNE FOR MAJOR REBUILDING OF THE SPRAY SYSTEMS IN ALL MODULES. SOME OIL WAS BURNED TO ALLOW BYPASSING OF THE REPAIR.
JUL. 75		NOT LOGGED	OIL AND GAS WERE BURNED IN JULY AND AUGUST. NO FGD OPERATION.
AUG. 75			
SEP. 75		NOT LOGGED	GAS AND OIL BURNED ON A PART-TIME BASIS DURING SEPTEMBER AND OCTOBER. BOILER OUTAGE WAS DUE TO INSPECTION, TURBINE REPAIR, AND REPLACEMENT OF THE SLURRY TANK SCREEN.
OCT. 75			
NOV. 75		NOT LOGGED	
DEC. 75			
JAN. 76		NOT LOGGED	PROJECTIONS BY THE UTILITY FOR THIS UNIT CALL FOR 330 DAYS OF OPERATION IN 1976 WITH FUEL CONSUMPTION BEING 60 PERCENT COAL, 25 PERCENT FUEL OIL, AND 15 PERCENT NATURAL GAS. LIKE UNIT 4, THIS UNIT MAY BE CONVERTED TO A VENTRI-ROD AND SPRAY TOWER SCRUBBING SYSTEM.
FEB. 76		NOT LOGGED	
MAR. 76			NO INFORMATION WAS REPORTED BY THE UTILITY FOR THE PERIOD.
APR. 76			
MAY 76			NO INFORMATION WAS REPORTED BY THE UTILITY FOR THE PERIOD.
JUN. 76			
JUL. 76			NO INFORMATION WAS REPORTED BY THE UTILITY FOR THE PERIOD.
AUG. 76			
SEP. 76			NO INFORMATION WAS REPORTED BY THE UTILITY FOR THE PERIOD.
OCT. 76			

LAWRENCE NO.5(CONTINUED)

MONTHS	OPERATING HOURS BOILER	FGD MODULES	COMMENTS
NOV. 76			THE UTILITY REPORTS THAT THE INSTALLATION OF THE NEW ROD AND SPRAY TOWER SCRUBBING SYSTEM IS NOW IN PROGRESS. THE SYSTEM WILL INCLUDE TWO SCRUBBING TRAINS, EACH HANDLING 50 PERCENT OF THE FLUE GAS CAPACITY. FOUNDATION AND STRUCTURAL STEEL ERECTION HAS BEEN COMPLETED. SOME OF THE BREECHING HAS BEEN INSTALLED. THE FGD SYSTEM WILL OPERATE ON A FULLY AUTOMATED BASIS. KP&L REPORTS THAT C-E HAS ENCOUNTERED SOME PROBLEMS WORKING OUT AND FINE-TUNING SOME OF THE LOGIC CIRCUITS. THE BOILER HAS BEEN FIRING NO.2 FUEL OIL WHILE THE NEW SCRUBBING SYSTEM IS BEING INSTALLED. THE SYSTEM WILL TREAT FLUE GAS RESULTING FROM THE BURNING OF LOW SULFUR (0.5 PERCENT) WYOMING COAL.
DEC. 76			

TABLE 3
PERFORMANCE DESCRIPTION FOR OPERATIONAL FGD SYSTEMS 12/76

IDENTIFICATION NO.	47
UTILITY NAME	KENTUCKY UTILITIES
UNIT NAME	GREEN RIVER UNITS 1 AND 2
UNIT LOCATION	CENTRAL CITY KENTUCKY
UNIT RATING	64 MW
FUEL CHARACTERISTICS	COAL 3.8 PERCENT SULFUR
FGD VENDOR	AMERICAN AIR FILTER
PROCESS	LIME SCRUBBING
NEW OR RETROFIT	RETROFIT
START UP DATE	9/75
FGD STATUS	OPERATIONAL
EFFICIENCY, PARTICULATES	99.7 PERCENT
SO2	80 PERCENT GUARANTEE
WATER MAKE UP	OPEN LOOP 1.20GPM/MW
SLUDGE DISPOSAL	STABILIZED SLUDGE DISPOSED IN UNLINED POND
UNIT COST	$64/KW CAPITAL *2.0MILLS/KWH OPERATING
OPERATIONAL EXPERIENCE	REFER TO BACKGROUND INFORMATION SECTION IN TABLE 3 OF THIS REPORT. BOILERS 1, 2, AND 3 ARE EXISTING UNITS WHICH HAVE BEEN FITTED WITH MECHANICAL COLLECTORS AND A WET LIME SCRUBBER-ABSORBER MODULE FOR THE CONTROL OF PARTICULATES AND SULFUR DIOXIDE. THE SCRUBBER MODULE WAS ORIGINALLY PLACED IN THE FLUE GAS PATH SEPT. 9, 1975. 100,100,100, AND 94 PERCENT RESPECTIVELY FOR THE MONTH OF OCTOBER. AN ANNUAL OPERABILITY INDEX VALUE OF 87 PERCENT.

BACKGROUND INFORMATION

ON

GREEN RIVER POWER STATION

THE GREEN RIVER POWER STATION IS WHOLLY OWNED AND OPERATED BY THE KENTUCKY UTILITIES COMPANY AND SITUATED ON THE GREEN RIVER, NEAR CENTRAL CITY IN MUHLENBERG COUNTY, KENTUCKY. THE STATION CONSISTS OF TWO TURBINE GENERATORS AND FOUR COAL-FIRED BOILERS.

AS THE RESULT OF A CONTRACT AWARDED BY KENTUCKY UTILITIES (KU) TO AMERICAN AIR FILTER (AAF), A TAIL-END WET LIME SCRUBBING SYSTEM WAS DESIGNED AND INSTALLED ON BOILERS 1, 2, AND 3 AT THE GREEN RIVER POWER STATION.

THE FLUE GAS DESULFURIZATION (FGD) AND PARTICULATE REMOVAL SYSTEM CONSISTS OF ONE SCRUBBER MODULE DESIGNED TO HANDLE A MAXIMUM OF 360,000 ACFM OF FLUE GAS AT 300 F. THE BLOW-THROUGH SCRUBBER MODULE CONTAINS A VARIABLE-THROAT FLOODED-ELBOW VENTURI FOR FLY ASH REMOVAL AND A MOBILE BED CONTACTOR FOR SULFUR DIOXIDE REMOVAL. ENTRAINED WATER DROPLETS ARE REMOVED VIA A CENTRIFUGAL DEMISTER BEFORE DISCHARGE TO A LOCAL STACK. THE SLURRY RECYCLE/DISCHARGE SYSTEM CONSISTS OF ONE COMMON ACID RESISTENT TANK WITH TWO PARTITIONS MAKING A TOTAL OF THREE COMPARTMENTS. COMPLETION OF CHEMICAL REACTIONS, RECIRCULATION OF SOLUTION AND WASTES DISCHARGE ARE CONTROLLED AND MONITORED HERE. MECHANICAL COLLECTORS ARE PROVIDED UPSTREAM OF THE WET SCRUBBING SYSTEM FOR PRIMARY PARTICULATE MATTER REMOVAL.

BOILERS 1, 2, AND 3 ARE PULVERIZED COAL-FIRED UNITS SERVICING TWO TURBINES, EACH RATED AT 32 MW (GROSS). THE FUEL BURNED IN THESE UNITS IS PRIMARILY A HIGH SULFUR WESTERN KENTUCKY COAL (10,797 BTU/LB., 3.8 TO 4.0 PERCENT SULFUR, 13 TO 14 PERCENT ASH). THE FGD SYSTEM CAN BE BYPASSES THROUGH A SERIES OF DUCTWORK AND GUILLOTINE DAMPERS.

A TURNKEY CONTRACT FOR THIS PROJECT WAS AWARDED TO AAF IN JUNE 1973. CONSTRUCTION AND INSTALLATION OF THE SYSTEM WAS COMPLETED BY MID-SEPTEMBER 1975. FOLLOWING GENERAL ELECTRICAL AND MECHANICAL DEBUGGING, WHICH INDLUDED OPERATION OF THE AGITATORS AND PUMPS, THE UNIT WAS PUT IN SERVICE ON AIR AND WATER ONLY IN AUGUST 1975. DURING THIS OPERATION PERIOD, THE FLOW OF GAS AND LIQUID, OPERATION OF DAMPERS, AND SPRAY PATTERNS WERE MONITORED AND CALIBRATED. NEXT, THE SYSTEM WAS OPERATED ON AIR AND WATER UNDER NORMAL PROCESS CONDITIONS. THE PURPOSE OF THIS PHASE OF OPERATION WAS TO DETECT ANY EARLY FAILURES OF A MECHANICAL NATURE PRIOR TO THE INITIAL FLUE GAS RUN.

THE FLUE GAS RUN COMMENCED THE MORNING OF SEPTEMBER 13, 1975. INITIAL OPERATION PROCEEDED ON A HALF-LOAD BASIS BECAUSE ONE OF THE TURBINE GENERATORS WAS OUT OF SERVICE FOR OVERHAUL AND REPAIRS. IN ADDITION, OPERATION OF THE SCRUBBING SYSTEM WAS CONDUCTED ON AN OPEN-WATER-LOOP BASIS. THIS MODE OF OPERATION (HALF LOAD, OPEN LOOP) CONTINUED INTO THE FIRST QUARTER OF 1976. IN MARCH, THE SYSTEM BEGAN OPERATION AT FULL LOAD CAPACITY IN A CLOSED-WATER-LOOP MODE. GUARANTEED SULFUR DIOXIDE REMOVAL EFFICIENCY IS 80 PERCENT FOR 3.8 PERCENT SULFUR COAL HAVING A HEATING VALUE EQUAL TO OR GREATER THAN 11,000 BTU/LB.

ADDITIONAL INFORMATION ON THE OPERATION OF THIS SYSTEM IS PRESENTED IN THE PERFORMANCE TABLE THAT FOLLOWS. A GENERAL PROGRESS FLOW DIAGRAM IS PRESENTED IS FIGURE 12 OF APPENDIX C.

FGD SYSTEM AVAILABILITY

GREEN RIVER NOS. 1 AND 2

PERIOD	TOTAL PERIOD (HR)	BOILER OPERATION (HR)	MODULE AVAILABILITY (HR)	NO. HR. MODULE CALLED UPON TO OPERATE	HR. MODULE OPERATE	COMMENTS
DEC. 75	744	398	550	331	257	SYSTEM BECAME OPERATIONAL SEPTEMBER 13, 1975, ON A HALF-LOAD BASIS BECAUSE OF TURBINE OVERHAUL. THE HALF-LOAD MODE CONTINUED THROUGHOUT THE REPORT PERIOD. LOGGING OF OPERATING DATA BEGAN DECEMBER 1975.
AVAILABILITY = 74%						
RELIABILITY = 78%						
OPERABILITY = 65%						
UTILIZATION = 35%						
JAN. 76	744	572	312	456	64	SYSTEM WAS DOWN A TOTAL OF 432 HOURS IN JANUARY. MAJOR PROBLEMS WERE FAILURE OF THE RECYCLE PUMPS AND FEED TANK AGITATOR, THAWING AND AND REPAIR OF NUMEROUS FROZEN LINES, AND SHUTDOWN OF SUMP PUMPS.
AVAILABILITY = 42%						
RELIABILITY = 14%						
OPERABILITY = 11%						
UTILIZATION = 9%						
FEB. 76	696	499	486	499	211	THE SYSTEM WAS INOPERATIVE A TOTAL OF 210 HOURS IN FEBRUARY. OUTAGE WAS DUE TO REPAIRS OF TANK AGITATORS, RECYCLE PUMPS, AND REACTANT PUMPS AND TO CLEANOUT OF REACTANT PUMPS, SLURRY PUMPS, SLAKE TANKS, AND MIX-HOLD TANK.
AVAILABILITY = 70%						
RELIABILITY = 42%						
OPERABILITY = 42%						
UTILIZATION = 30%						
MAR. 76	744	450	722	409	386	DURING THE REPORT PERIOD ALL THE RUBBER-LINED IMPELLERS WERE REPLACED IN THE PUMPS.
AVAILABILITY = 97%						
RELIABILITY = 95%						
OPERABILITY = 85%						
UTILIZATION = 52%						

FGD SYSTEM AVAILABILITY (CONTINUED)

GREEN RIVER NOS. 1 AND 2

RIOD	TOTAL PERIOD HR	BOILER OPERATION HR	MODULE AVAILABILITY HR	NO. HR. MODULE CALLED UPON TO OPERATE	HR. MODULE OPERATE	COMMENTS
APR. 76	720	552	648	552	552	THE UTILITY MADE A PRIOR COMMITMENT TO RUN AT 100 PWRCENT OPERABILITY DURING THE MONTH OF APRIL.
AVAILABILITY = 90%						
RELIABILITY = 100%						
OPERABILITY = 100%						
UTILIZATION = 77%						
MAY 76	744	456	606	456	456	
AVAILABILITY = 81%						
RELIABILITY = 100%						
OPERABILITY = 100%						
UTILIZATION = 61%						
JUN. 76	720	597	720	596	589	
AVAILABILITY = 100%						
RELIABILITY = 99%						
OPERABILITY = 99%						
UTILIZATION = 82%						
JUL. 76	744	584	666	581	574	
AVAILABILITY = 90%						
RELIABILITY = 99%						
OPERABILITY = 98%						
UTILIZATION = 72%						
AUG. 76	744	744	722	744	722	THE MAJORITY OF THE TOTAL FORCED SCRUBBER OUTAGE TIME OCCURRED
AVAILABILITY = 97%						

FGD SYSTEM AVAILABILITY (CONTINUED)

GREEN RIVER NOS. 1 AND 2

PERIOD	TOTAL PERIOD (HR)	BOILER OPERATION (HR)	MODULE AVAILABILITY (HR)	NO. HR. MODULE CALLED UPON TO OPERATE	HR. MODULE OPERATE	COMMENTS
RELIABILITY = 97%						BECAUSE OF VIBRATION IN THE SCRUB-
OPERABILITY = 97%						BER BOOSTER I.D. FAN, NECESSITATING
UTILIZATION = 97%						SYSTEM SHUTDOWN AND REPAIR.
SEP. 76	720	571	617	571	571	HALF-LOAD OPERATIONS WERE CONDUCTED
AVAILABILITY = 86%						THROUGHOUT THE PERIOD BECAUSE OF
RELIABILITY = 100%						BEARING PROBLEMS TO ONE OF THE TWO
OPERABILITY = 100%						TURBINE GENERATING UNITS. SOME
UTILIZATION = 79%						MINOR FAN PROBLEMS, WHICH DID NOT
						REQUIRE ANY FORCED OUTAGE TIME,
						WERE ENCOUNTERED DURING THE PERIOD.
OCT. 76	744	699	744	699	699	
AVAILABILITY = 100%						
RELIABILITY = 100%						
OPERABILITY = 100%						
UTILIZATION = 94%						
NOV. 76	720	704	720	704	704	DURING THE PERIOD SOME FLUE GAS WAS BY-PASSED AROUND THE SYSTEM WHILE THE UTILITY CINDUCTED A CHECKOUT OF THE SCRUBBER INTERNALS AND REPLACED SOME OF THE PACKING SPHERES IN THE MOBILE BED.
AVAILABILITY = 100%						
OPERABILITY = 100%						
RELIABILITY = 98%						
UTILIZATION = 98%						
DEC. 76	744	536	539	591	517	
AVAILABILITY = 73%						
OPERABILITY = 97%						
RELIABILITY = 87%						
UTILIZATION = 70%						

TABLE 3
PERFORMANCE DESCRIPTION FOR OPERATIONAL FGD SYSTEMS 12/76

IDENTIFICATION NO.	48
UTILITY NAME	KEY WEST UTILITY BOARD
UNIT NAME	STOCK ISLAND PLANT
UNIT LOCATION	KEY WEST FLORIDA
UNIT RATING	37 MW
FUEL CHARACTERISTICS	OIL 2.4 PERCENT SULFUR
FGD VENDOR	ZURN AIR SYSTEMS
PROCESS	LIMESTONE SCRUBBING
NEW OR RETROFIT	NEW
START UP DATE	10/72
FGD STATUS	OPERATIONAL
EFFICIENCY, PARTICULATES	90 PERCENT
SO2	85 PERCENT-ESTIMATED
WATER MAKE UP	OPEN LOOP 2.7 GPM/MW
SLUDGE DISPOSAL	UNSTABILIZED SLUDGE DISPOSED IN UNLINED POND
UNIT COST	$ 21.6/KW CAPITAL COST
OPERATIONAL EXPERIENCE	REFER TO BACKGROUND INFORMATION SECTION IN TABLE 3 OF THIS REPORT. THIS FGD SYSTEM HAS BEEN OPERATIONAL SINCE OCTOBER 1972. THE FGD SYSTEM HAS BEEN OUT OF SERVICE SINCE JANUARY 28,1975. MODIFICATIONS AND REPAIRS ARE CURRENTLY IN PROGRESS. SYSTEM RESTART IS STILL INDEFINITE. A CHECKOUT OF ALL SYSTEM MOTORS AND PUMPS MUST BE COMPLETED BEFORE STARTUP CAN COMMENCE. DURING THE REPORT PERIOD THE UNIT DID NOT OPERATE BECAUSE OF REPAIRS TO BOILER TUBES THAT FAILED. RESTART IS SCHEDULED SHORTLY.

BACKGROUND INFORMATION

ON

STOCK ISLAND PLANT

THE UTILITY BOARD OF THE CITY OF KEY WEST OWNS AND OPERATES A NEW 37-MW OIL-FIRED POWER BOILER, INSTALLED AT THEIR STOCK ISLAND PLANT WHICH IS LOCATED DIRECTLY ADJACENT TO THE ISLAND CITY OF KEY WEST. THE BOILER IS AN ERIE CITY BALANCED-DRAFT OIL-FIRED UNIT THAT IS NOMINALLY RATED AT 37 MW AND CAN ACHIEVE 42 MW AT FULL PERFORMANCE. THE UNIT FIRES NO. 6 RESIDUAL FUEL OIL FROM VENEZUELA WITH SULFUR AND ASH CONTENTS OF 2.75 AND 0.05 PERCENT, RESPECTIVELY. THE UNIT'S GROSS HEAT RATE IS 11,380 BTU/KWH. INITIAL OPERATION OF THE UNIT COMMENCED IN NOVEMBER 1972.

THE EMISSION CONTROL SYSTEM FOR THIS UNIT CONSISTS OF A MULTIPLE TUBE MECHANICAL DUST COLLECTOR INSTALLED UPSTREAM OF TWO SULFUR DIOXIDE WET SCRUBBERS DESIGNED AND INSTALLED BY ZURN AIR INDUSTRIES. THIS IS A DEMONSTRATION FACILITY (EPA FUNDED) EMPLOYING LIMESTONE IN A SEAWATER SOLUTION FOR THE REMOVAL OF SULFUR DIOXIDE FROM THE BOILER FLUE GAS STREAM. NO PROVISIONS FOR STACK GAS REHEAT EXIST AT THE FACILITY.

THE LIMESTONE ABSORBENT IS OBTAINED FROM CORAL DREDGED FROM THE OCEAN. THE CORAL CONSISTS PRIMARILY OF $CaCO_3$ WITH LITTLE OR NO $MgCO_3$. THE CORAL IS GROUND TO A FINE POWDER IN A HAMMERMILL CRUSHER TO 90 PERCENT MINUS 325 MESH AND SLURRIED IN SEAWATER.

ZURN DUSTRAXTORS ARE EMPLOYED FOR THE REMOVAL OF SULFUR DIOXIDE AND RESIDUAL PARTICULATES FROM THE BOILER FLUE GAS. THE TWO SCRUBBER MODULES ARE DESIGNED TO HANDLE A COMBINED TOTAL OF 126,950 CFM AT 150 F. FLUE GASES FROM THE BOILER ARE DRAWN THROUGH AN INDUCED DRAFT FAN AND FORCED EITHER THROUGH THE BYPASS DUCT OR THROUGH ONE OR BOTH SCRUBBERS VIA THREE SETS OF DAMPERS BETWEEN THE INDUCED-DRAFT FAN AND THE STACK. BEFORE ENTERING THE SCRUBBING SYSTEM THE GAS IS COOLED FROM 360 F TO 160 F BY SEAWATER SPRAYS. THIS COOLING PROTECTS THE FIBERGLASS COMPONENTS OF THE SCRUBBER MODULES. A PRESSURE DROP OF 12 TO 14 INCHES WATER GAUGE IS THE NORMAL OPERATING RANGE FOR THE SCRUBBERS. THE SPENT SCRUBBING SLURRY IS BLED OFF TO TWO ON-SITE SETTLING PONDS WITH A RETENTION CAPACITY OF 21 DAYS. THE SLUDGE SETTLES OUT AND CLARIFIED WATER IS DISCHARGED BACK INTO THE SEA BY AN OVERFLOW PIPE AND SEEPAGE. THE PARTICULATE AND SULFUR DIOXIDE REMOVAL EFFICIENCIES OF THE EMISSION CONTROL SYSTEM ARE 64 TO 82 PERCENT AND 68 TO 73 PERCENT, RESPECTIVELY. ACTUAL INLET AND OUTLET SULFUR DIOXIDE LOADINGS ARE 1300 TO 1500 PPM AND 300 TO 500 PPM. INLET AND OUTLET PARTICULATE LOADINGS ARE 0.20 GR/SCF AND 0.05 GR/SCF.

STOCK ISLAND (CONTINUED)

SYSTEM PERFORMANCE

START-UP OF THE SCRUBBING SYSTEM OCCURRED IN AUGUST 1973. ENSUING OPERATION HAS PROCEEDED ON AN INTERMITTENT BASIS. THE MAJOR PROBLEM AREAS ENCOUNTERED HAVE INCLUDED*

SEVERE CORROSION OF GAS QUENCH DUCT AND DAMPER SEALING FANS ON INLET AND OUTLET OF SCRUBBERS.

PLUGGING AT THE BOTTOM OF SCRUBBER TUBES.

LIQUID LEVEL CONTROL FAILURES IN THE SCRUBBER MODULES.

POOR LIMESTONE UTILIZATION (APPROXIMATELY 20 PERCENT).

INDUCED DRAFT FAN REPAIRS.

REPLACEMENT OF INTERNAL STAINLESS STEEL PARTS WITH MONEL COMPONENTS.

BOILER FOUNDATION AND BOILER TUBE PROBLEMS.

LIMESTONE SUPPLY SHORTAGES.

ADDITIONAL INFORMATION AND DETAILS ON THE PROGRESS OF THIS INSTALLATION ARE PRESENTED IN THE PERFORMANCE TABLE BELOW. A PROCESS FLOW DIAGRAM IS PRESENTED IN FIGURE 13 OF APPENDIX C.

MONTH	OPERATING HOURS BOILER	OPERATING HOURS FGD SYSTEM	FGD SYSTEM AVAILABILITY	COMMENTS
				FGD SYSTEM WAS SHUT DOWN ON JANUARY 28, 1975, BECAUSE OF DAMAGED DUCTWORK BAFFLES. SPRAY TREES AND OTHER STAINLESS STEEL PARTS HAVE BEEN RREPLACED WITH MONEL.
JUL. 75				FGD SYSTEM IS STILL OUT OF SERVICE BUT IS SCHEDULED FOR RESTART IN EARLY OCTOBER.
AUG. 75				BOILER HAS BEEN DOWN SINCE AUGUST 30 FOR REPAIRS OF THE INDUCED-DRAFT FAN.
SEP. 75				FGD SYSTEM IS STILL OUT OF SERVICE. DATE OF SYSTEM RESTART IS INDEFINTE.
OCT. 75				
NOV. 75				FGD SYSTEM IS STILL OUT OF SERVICE. THE UTILITY IS REPLACING DAMPERS AND VARIOUS SYSTEM PARTS. DATE OF SYSTEM RESTART IS STILL INDEFINITE.
DEC. 75				
JAN. 76				REPAIRS TO OUTLET DAMPER ARE COMPLETE. ALL HOLES IN THE HOPPER WALL AND DUCTWORK HAVE BEEN PATCHED. NEW SPRAY TREES HAVE BEEN INSTALLED. THE SYSTEM WILL NOT BE PLACED IN SERVICE UNTIL A THOROUGH CHECKOUT OF ALL THE PUMPS AND MOTORS IS FIRST COMPLETED.
FEB. 76				
MAR. 76				THE FGD SYSTEM RESTART HAS BEEN DELAYED BECAUSE OF BOILER-RELATED PROBLEMS. DATE OF SYSTEM RESTART IS STILL INDEFINITE.
APR. 76				
MAY 76				THE UTILITY REPORTED THAT REPAIRS AND MODIFICATIONS ARE NEARING COMPLETION.
JUN. 76				SYSTEM RESTART IS EXPECTED SHORTLY.

MONTH	OPERATING HOURS BOILER	OPERATING HOURS FGD SYSTEM	FGD SYSTEM AVAILABILITY	COMMENTS
JUL. 76				ALL MODIFICATIONS TO THE SCRUBBING SYSTEM WHICH CAN BE MADE AT THE
AUG. 76				PRESENT TIME HAVE BEEN COMPLETED. THE SCRUBBING SYSTEM HAS BEEN SEALED OFF FROM THE BOILER BY A METAL PARTITION WHILE THE MODIFICATIONS WERE IN PROGRESS. FINAL MODIFICATIONS CAN BE COMPLETED ONLY WHEN THE SCRUBBING SYSTEM AND BOILER HAVE BEEN INTEGRATED INTO ONE UNIT, WHICH WILL REQUIRE BRINGING THE BOILER DOWN. THE UNIT IS CONTINUING TO FIRE 2.1-2.4 PERCENT SULFUR FUEL OIL.
SEP. 76				THE BOILER HAS BEEN TAKEN OUT OF SERVICE BECAUSE OF TUBE FAILURES.
OCT. 76				THE METAL PARTITION BETWEEN THE SCRUBBING SYSTEM AND BOILER HAS BEEN REMOVED. A SHAKE-DOWN AND TEST RUN ON WATER WILL BE CONDUCTED SHORTLY.
NOV. 76				THE UTILITY REPORTED NO CHANGE IN STATUS, REPLACEMENT PARTS HAVE
DEC. 76				JUST REACHED THE PLANT. TENATTIVE RESTART DATE IS FEB. 1, 1977.

TABLE 3
PERFORMANCE DESCRIPTION FOR OPERATIONAL FGD SYSTEMS 12/76

IDENTIFICATION NO.	49
UTILITY NAME	LOUISVILLE GAS & ELECTRIC
UNIT NAME	CANE RUN NO 4
UNIT LOCATION	LOUISVILLE KENTUCKY
UNIT RATING	178 MW
FUEL CHARACTERISTICS	COAL 3.5 - 4.0 PERCENT SULFUR
FGD VENDOR	AMERICAN AIR FILTER
PROCESS	LIME SCRUBBING
NEW OR RETROFIT	RETROFIT
START UP DATE	8/76
FGD STATUS	OPERATIONAL
EFFICIENCY, PARTICULATES	99 PERCENT GUARANTEE
SO2	90 PERCENT GUARANTEE
WATER MAKE UP	
SLUDGE DISPOSAL	STABILIZED SLUDGE DISPOSED IN UNLINED POND
UNIT COST	$50/KW (INCLUDING LIME AND SLUDGE DISPOSAL FACILITIES)
OPERATIONAL EXPERIENCE	THE CONSTRUCTION OF THE SCRUBBING FACILITY WAS COMPLETED ON JULY 5, 1976. PRESTART-UP TESTING WAS COMPLETED DURING THE REMAINDER OF THE MONTH. THE TESTING INCLUDED AIR/WATER OPERATION WITH CONCURRENT EQUIPMENT CHECKOUT. THE SCRUBBING SYSTEM COMMENCED OPERATION ON FLUE GAS AUGUST 1 AND HAS BEEN IN SERVICE ON A CONTINUOUS BASIS THROUGHOUT THE REMAINDER OF THE YEAR. TO DATE, THE CARBIDE LIME SCRUBBING SYSTEM HAS BEEN AVAILABLE TO THE BOILER ON AN APPROXIMATELY 90 PERCENT BASIS. A NUMBER OF MINOR MECHANICAL MODIFICATIONS HAVE BEEN PERFORMED ON THE SYSTEM. 14

BACKGROUND INFORMATION

ON

CANE RUN NO. 4

THE CANE RUN POWER STATION IS OPERATED BY THE LOUISVILLE GAS AND ELECTRIC COMPANY AND LOCATED IN LOUISVILLE, KENTUCKY. THE PLANT CONSISTS OF SIX ELECTRIC POWER STEAM GENERATING UNITS HAVING A TOTAL STEAM TURBINE NET GENERATING CAPACITY OF 992-MW.

UNIT NO. 4 IS A COAL-FIRED STEAM GENERATING BOILER WITH A CONTINUOUS NET GENERATING CAPACITY OF 178-MW. THE UNIT HAS A MAXIMUM POWER GENERATION CAPACITY OF 190-MW. THE UNIT HEAT RATE IS 10,030 BTU/KWH. THE BOILER IS CURRENTLY BURNING COAL WITH A GROSS HEATING VALUE OF 11,500 BTU/LB AND AVERAGE SULFUR AND ASH CONTENTS OF 3.5-4.0 PERCENT AND 11.0-12.0 PERCENT, RESPECTIVELY.

THE EMISSION CONTROL SYSTEM FOR THIS UNIT CONSISTS OF AN ELECTROSTATIC PRECIPITATOR (ESP) UPSTREAM OF A WET SCRUBBING SYSTEM. THE ESP PROVIDES PRIMARY PARTICULATE CONTROL WHILE THE WET SCRUBBING SYSTEM PROVIDES ADDITIONAL PARTICULATE REMOVAL AND PRIMARY SULFUR DIOXIDE CONTROL.

THE FLUE GAS DESULFURIZATION (FGD) SYSTEM CONSISTS OF TWO IDENTICAL PARALLEL SCRUBBING TRAINS DESIGNED AND INSTALLED BY THE AMERICAN AIR FILTER (AAF) COMPANY. THE WET SCRUBBING SYSTEM UTILIZES A SLURRY OF CARBIDE LIME FOR SULFUR DIOXIDE REMOVAL FROM THE FLUE GAS. THE CARBIDE LIME IS A WASTE BY-PRODUCT OBTAINED FROM A NEARBY ACETYLENE MANUFACTURING PLANT. THE HYDRATED LIME CONTAINS 90.0 TO 92.0 PERCENT CALCIUM HYDROXIDE, 2.0 TO 2.5 PERCENT SILICA, 3.0 TO 8.0 PERCENT CALCIUM CARBONATE, AND 0.1 PERCENT MAGNESIUM OXIDE.

EACH SCRUBBING TRAIN IS EQUIPPED WITH A GUILLOTINE-TYPE BY-PASS DAMPER ALLOWING BY-PASSING OF THE GAS AROUND THE SCRUBBERS. EACH SCRUBBING TRAIN CONTAINS THE FOLLOWING MAJOR PIECES OF EQUIPMENT* I.D. BOOSTER FAN, QUENCH SECTION, FLOODED ELBOW, MOBILE BED CONTACTOR, CENTRIFUGAL DEMISTER, AND A 3-SECTION REACTANT TANK SYSTEM. THE WASTE DISPOSAL SYSTEM CONSISTS OF A 75-FOOT DIAMETER THICKENER FOR LIQUID-SOLIDS SEPARATION AND A FLY ASH POND FOR ULTIMATE DISPOSAL OF THE THICKENER UNDERFLOW. THE SCRUBBING WASTES ARE STABILIZED WITH FLY ASH AND WATER IS RECYCLED BACK TO THE PROCESS. THE SYSTEM DOES NOT USE A STACK GAS REHEAT SYSTEM. A WET STACK, WHICH IS THE EXISTING STACK LINED WITH CARBOLYNE, OBVIATES THE NECESSITY OF REHEAT.

FGD SYSTEM PERFORMANCE

CANE RUN UNIT NO. 4

PERIOD	HOURS	BOILER (HR)	SCRUBBERS (HR)	PERFORMANCE FACTORS (%) OPERABILITY	UTILIZATION	COMMENTS
AUG. 76	744	740	666	90	90	OUTAGE TIME DURING THE MONTH WAS DUE PRIMARILY TO EQUIPMENT INSPECTIONS, REPAIR/REPLACEMENT OF AUXILIARY MOTOR PARTS, AND DEPLETION OF ABSORBENT SUPPLY BECAUSE OF A LATE BARGE DELIVERY. THE SCRUBBING SYSTEM HAS BEEN GENERALLY OPERATING AT APPROXIMATELY 50 TO 80 PERCENT FLUE GAS CAPACITY. SOME MINOR PROBLEMS HAVE BEEN ENCOUNTERED WITH AUXILIARY EQUIPMENT MOTORS AND SPRAY NOZZLES IN THE MOBILE BED CONTACTOR. THE SPRAY NOZZLES ARE SPINNER-VANE COMPONENTS ORIGINALLY CONSTRUCTED OF PLASTIC. OPERATING TEMPERATURES AND PRESSURES HAVE CAUSED THE PLASTIC HOUSING TO EXPAND RESULTING IN THE VANES EXTRUDING OUT THE FRONT END, SUBSEQUENTLY CAUSING A BLOCKAGE OF THE SLURRY FEED. THE NOZZLES HAVE BEEN REPLACED WITH CERAMIC-CONSTRUCTED COMPONENTS.
SEP. 76	720	720	650	90	90	THE SYSTEM WAS IN SERVICE THROUGHOUT THE MONTH, BEING AVAILABLE TO THE BOILER ON A 90 PERCENT BASIS. THE UNIT WAS TAKEN OUT OF SERVICE ON OCTOBER 25 TO IMPLEMENT ADDITIONAL MODIFICATIONS TO THE SCRUBBING SYSTEM. MAJOR SYSTEM MODIFICATIONS INCLUDE INCREASING PUMP CAPACITY AND DECREASING PRESSURE DROP. THESE TWO PROBLEMS HAVE HINDERED OPERATION OF THE UNIT AT FULL LOAD CAPACITY. TO DATE, THE MECHANICAL RELIABILITY
OCT. 76	744	600	540	90	73	

FGD SYSTEM PERFORMANCE

CANE RUN UNIT NO. 4

PERIOD	HOURS	BOILER (HR)	SCRUBBERS (HR)	PERFORMANCE FACTORS (%) OPERABILITY	UTILIZATION	COMMENTS
						OF THE SYSTEM, AS A FUNCTION OF SERVICE TIME VERSUS OUTAGE TIME, HAS BEEN VERY GOOD.
NOV. 76	720			95		THE SYSTEM INCURRED NO MAJOR PROBLEMS OR UPSETS
DEC. 76	744			90		DURING THE REPORT PERIOD. CARBIDE LIME SLURRY IS EMPLOYED AS THE SULFUR DIOXIDE ABSORBENT.

TABLE 3
PERFORMANCE DESCRIPTION FOR OPERATIONAL FGD SYSTEMS 12/76

IDENTIFICATION NO.	56
UTILITY NAME	LOUISVILLE GAS & ELECTRIC
UNIT NAME	PADDYS RUN NO 6
UNIT LOCATION	LOUISVILLE KENTUCKY
UNIT RATING	65 MW
FUEL CHARACTERISTICS	COAL 3.5-4.0 PERCENT SULFUR
FGD VENDOR	COMBUSTION ENGINEERING
PROCESS	LIME SCRUBBING
NEW OR RETROFIT	RETROFIT
START UP DATE	4/73
FGD STATUS	OPERATIONAL
EFFICIENCY, PARTICULATES	99 PERCENT DESIGN
SO2	80 PERCENT (DESIGN)
WATER MAKE UP	OPEN LOOP 0.7 GPM/MW
SLUDGE DISPOSAL	UNSTABILIZED SLUDGE DISPOSED IN UNLINED POND
UNIT COST	$57/KW CAPITAL 2.5 MILLS/KWH OPERATING
OPERATIONAL EXPERIENCE	REFER TO THE BACKGROUND INFORMATION SECTION IN TABLE 3 OF THIS REPORT. THIS SCRUBBING SYSTEM WAS DESIGNED BY COMBUSTION ENGINEERING AND PLACED IN SERVICE IN APRIL 1973. PADDYS RUN NO.6 IS A PEAK-LOAD UNIT THAT OPERATES ONLY DURING DEMAND PERIODS. THE UNIT WAS OPERATIONAL DURING THE REPORT PERIOD, BEING AVAILABLE TO THE BOILER ON 99 PERCENT BASIS. SCRUBBER OPERATIONS WERE CONDUCTED ON CARBIDE LIME SLURRY DURING THE PERIOD. THE EPA-SUBSIDIZED SCRUBBER/SLUDGE STUDY CALLS FOR A HIGH CALCIUM VIRGIN LIME RUN TO COMMENCE ON MARCH 1, 1977.

BACKGROUND INFORMATION

ON

PADDY'S RUN POWER STATION

PADDY'S RUN POWER STATION IS LOCATED IN LOUISVILLE, KENTUCKY. THE PLANT HAS SIX ELECTRIC POWER GENERATING UNITS WITH A TOTAL RATED CAPACITY OF 320 MW. UNIT NO. 6 IS RETROFITTED WITH A CARBIDE LIME-BASE FGD SYSTEM.

UNIT NO. 6 IS A PEAK LOAD COAL-FIRED BOILER, MANUFACTURED BY FOSTER WHEELER AND INSTALLED IN 1950. THIS UNIT FIRES COAL WITH A GROSS HEATING VALUE OF 11,500 BTU/LB AND AVERAGE SULFUR AND ASH CONTENTS OF 3.7 PERCENT AND 13 PERCENT, RESPECTIVELY.

THE FGD SYSTEM CONSISTS OF TWO MODULES. EACH HANDLES 175,000 ACFM OF 350 F FLUE GAS. EACH MODULE IS MADE UP OF TWO STAGES OF 3-INCH MARBLE BEDS, FOLLOWED BY A TWO-STAGE CHEVRON-TYPE DEMISTER. THE GAS IS REHEATED BY DIRECT COMBUSTION OF NATURAL GAS. SCRUBBING SYSTEM PROVIDING PRIMARY CONTROL OF PARTICULATE EMISSIONS. THIS UNIT OPERATES WITH A 99.1 PERCENT PARTICULATE REMOVAL EFFICIENCY. PARTICULATE LOADING AT THE ESP OUTLET IS 0.05 GR/SCF
PARTICULATE LOADING AT THE ESP OUTLET IS 0.05 GR/SCF.

THE SYSTEM UTILIZES A SLURRY OF CARBIDE LIME AS THE SULFUR DIOXIDE ABSORBENT. THE CARBIDE LIME, A WASTE BY-PRODUCT OBTAINED FROM A NEARBY ACETYLENE MANUFACTURING PLANT CONTAINS 90 TO 92.0 PERCENT CALCIUM HYDROXIDE, 2.0 TO 2.5 PERCENT SILICA, 3.0 TO 8.0 PERCENT CALCIUM CARBONATE, AND 0.1 PERCENT MAGNESIUM OXIDE.

THE UNIT OPERATES ON A CLOSED-LOOP MODE* THE SULFUR DIOXIDE IS ABSORBED IN THE MARBLE BED BY A SLURRY OF CALCIUM SULFITE TO FORM A MIXTURE OF CALCIUM SULFITE/BISULFITE. EFFLUENT FROM THE MARBLE-BED TOWER IS CONVERTED IN THE REACTION TANK TO CALCIUM SULFITE BY THE ADDITION OF CALCIUM HYDROXIDE. HALF OF THE REACTION TANK EFFLUENT IS RETURNED TO THE ABSORBER TOWERS WHILE THE OTHER HALF IS FED TO A CLARIFIER TANK. THE CALCIUM SULFITE CRYSTALS PRECIPITATE WITH THE AID OF A FLOCCULANT, WHICH IS ADDED AT THE RATE OF 4 TO 7 PPM. THE OVERFLOW IS RETURNED TO THE REACTION TANK. THE UNDERFLOW, CONTAINING 22 TO 24 PERCENT SOLIDS, IS STABILIZED BY MIXING IT WITH LIME. APPROXIMATELY 60 TO 100 POUNDS OF LIME ARE USED PER TON OF DRY SOLIDS OF SLUDGE. THE FIXED SLUDGE IS TRANSPORTED BY TRUCKS TO A 10-ACRE OFF-SITE LANDFILL AREA.

DURING THE INITIAL 45 DAYS OF OPERATION ONLY ONE ABSORBER WAS PLACED IN SERVICE, ALLOWING OPERATORS TO OBSERVE THE EQUIPMENT AND TO DETERMINE ANY NEEDED MODIFICATIONS. BEGINNING MAY 19, 1974, THE SYSTEM WAS SHUT DOWN FOR A MONTH FOR MODIFICATIONS, THE MOST SIGNIFICANT BEING INSTALLATION OF EQUIPMENT FOR INJECTING A FLOCCULATING AGENT INTO THE CLARIFIER TANK. DURING THE PERIOD JUNE 19 TO JULY 11, INCONSISTENT SIZING OF SLURRY ADDITIVE MATERIAL AS RECEIVED CAUSED MALFUNCTION OF THE ADDITIVE CONTROL VALVES AND UNDUE PLUGGING OF SLURRY LINE STRAINERS. THESE PROBLEMS WERE CORRECTED BY INSTALLATION OF A DISINTEGRATOR IN THE SLURRY

PADDY'S RUN (CONTINUED)

MODIFICATION MADE WAS LOWERING THE SLURRY PH TO REMOVE SULFITE SCALE FORMATION ON THE UPPER BED PERFORATED SUPPORT PLATE AND ON

MODIFICATION MADE WAS LOWERING OF THE SLURRY PH TO REMOVE SULFITE SCALING FORMED ON THE UPPER BED PERFORATED SUPPORT PLANT AND ON THE MARBLES.

FGD SYSTEM OPERABILITY

PADDY'S RUN UNIT NO. 6

MONTH	OPERABILITY (%) MODULE A	MODULE B	COMMENTS
APR. 73	18	56	MODULES WERE OPERATED ONE AT A TIME, WITH FREQUENT SHUTDOWNS FOR INSPECTION OF EQUIPMENT AND MINOR REPAIRS.
MAY 73	11	65	SINGLE-MODULE OPERATION CONTINUED THROUGH MAY 19, WHEN THE UNIT WAS SHUT DOWN FOR MODIFICATIONS. THE MOST SIGNIFICANT MODIFICATION WAS INSTALLATION OF EQUIPMENT FOR INJECTION OF A FLOCCULATING AGENT INTO THE CLARIFIER TANK.
JUN. 73	1	6	OPERATION WAS INTERMITTENT FROM JUNE 19 TO JULY 11 BECAUSE OF MECHANICAL PROBLEMS WITH THE SLURRY PUMPS.
JUL. 73	21	21	DURING A SCHEDULED OUTAGE FROM JULY 12 THROUGH AUGUST 1, SEVERAL REPAIRS WERE MADE TO THE LIME SLURRY MAKEUP SYSTEM. A DISINTEGRATOR UNIT WAS INSTALLED TO REDUCE PLUGGING OF STRAINERS AND SLURRY CONTROL VALVES.
AUG. 73	53	64	THE OPERATION WAS CONTINUOUS FROM AUGUST 2 TO AUGUST 18 EXCEPT FOR A BRIEF SHUTDOWN DUE TO A BOILER-RELATED PROBLEM. FROM AUGUST 19 TO SEPTEMBER 5, THE SYSTEM WAS SHUT DOWN TO REPLACE THE CLARIFIER'S UNDERFLOW LINE WITH ONE OF LARGER DIAMETER AND TO INSTALL ADDITIONAL PUMP CAPACITY IN THE CLARIFIER'S OVERFLOW SYSTEM.
SEP. 73	85	72	THE UNIT OPERATED CONTINUOUSLY BETWEEN SEPTEMBER 6 AND SEPTEMBER 20 EXCEPT FOR A 7-HOUR SHUTDOWN TO REPAIR A MARBLE BED SUPPORT PLATE. THE UNIT WAS SHUT DOWN THE REMAINDER OF THE MONTH
OCT. 73	49	94	THE FGD SYSTEM REMAINED IN SERVICE TO DEC. 20 AFTER WHICH THE BOILER AND THE SCRUBBER MODULES
OCT9 73	49	94	THE FGD SYSTEM WAS IN SERVICE THROUGH DECEMBER 20 AFTER WHICH THE BOILER (AND THE SCRUBBERS)
NOV. 73	35	100	WERE SHUT DOWN BECAUSE OF *NO DEMAND* (THIS IS A PEAKING-LOAD BOILER).
DEC. 73	44	78	
JAN. 74	0	0	BOILER SHUT DOWN BECAUSE OF *NO DEMAND.*
THROUGH			
JUL. 74	0	0	

FGD SYSTEM OPERABILITY

PADDY'S RUN UNIT NO. 6

MONTH	OPERABILITY (%) MODULE A	MODULE B	COMMENTS
AUG. 74	50	77	UNIT HAS BEEN ON AND OFF FREQUENTLY DUE TO FLUCTUATION IN POWER DEMAND.
SEP. 74	0	0	BOILER IS DOWN BECAUSE OF *NO DEMAND.*
OCT. 74	100	100	BOILER TURNED ON SPECIFICALLY TO PERFORM LIMESTONE TESTS ON FGD SYSTEM.
NOV. 74 THROUGH AUG. 75	NO DEMAND		BOILER IS DOWN BECAUSE OF *NO DEMAND.*
SEP. 75	100	100	BOILER AND FGD SYSTEM OPERATIONAL ALL OF SEPTEMBER AND FIRST TWO WEEKS IN OCTOBER. SYSTEM
OCT. 75	100	100	OUTAGE DURING THE LAST TWO WEEKS OF OCTOBER WAS DUE PRIMARILY TO BREECHING IN THE BOILER SECTION. OPERABILITY FOR BOTH MODULES DURING THE OPERATIONAL PERIOD WAS 100 PERCENT (BASED UPON LG&E'S PEAK LOAD DETERMINATION). SO2 REMOVAL WAS REPORTED TO BE OVER 98 PERCENT.
NOV. 75	100	100	BOILER AND SCRUBBER SYSTEM RAN MOST OF THE REPORT PERIOD ON A MONDAY-THROUGH-FRIDAY BASIS. TWO
DEC. 75	90	90	MINOR OUTAGES IN DECEMBER WERE DUE TO MALFUNCTION AND REPAIR OF THE DUAL STRAINER SWITCH SHAFT IN THE BOTTOM OF THE SCRUBBER MODULE.
JAN. 76	100	100	SO2 REMOVAL EFFICIENCY WAS REPORTED TO BE 99 PERCENT DURING JANUARY. THE SYSTEM WAS SHUT DOWN
FEB. 76	NO DEMAND		IN EARLY FEBRUARY IN PREPARATION FOR AN EPA SCRUBBER/SLUDGE STUDY SCHEDULED FOR JUNE OR JULY. THE SCRUBBER WILL NOT BE OPERATED UNTIL THE START OF THE STUDY PROGRAM UNLESS THE BOILER IS REQUIRED FOR PEAKING POWER DEMANDS. HIGHLIGHTS OF THE SCRUBBER/SLUDGE STUDY PROGRAM ARE AS FOLLOWS*

6 MONTH DURATION.

ONE SCHEDULED SHUTDOWN FOR TEST MODIFICATIONS.

FGD SYSTEM OPERABILITY

PADDY'S RUN UNIT NO. 6

MONTH	OPERABILITY (%) MODULE A	MODULE B	COMMENTS
			DELIBERATE HIGH CHLORIDE CONCENTRATION OPERATION.
			MGO INNOCULATION.
			EXTENSIVE SLUDGE STUDY* FIXATION, LEACHATES, SEASONAL VARIATIONS.
MAR. 76	NO DEMAND		THE UNIT DID NOT OPERATE DURING THE REPORT PERIOD IN ANTICIPATION OF THE EPA SCRUBBER/SLUDGE
APR. 76	NO DEMAND		STUDY. THE UTILITY IS NOW COMPLETING SYSTEM MODIFICATIONS FOR THE OPERATION OF THE TEST
MAY 76	100	100	PROGRAM. THIS PEAK LOAD UNIT WAS OPERATED PART OF THE TIME DURING THE REPORT PERIOD (APPROXI-
JUN. 76	100	100	MATELY 2 WEEKS IN MAY AND 2 WEEKS IN JUNE). THE SCRUBBER WAS AVAILABLE TO THE BOILER 100
			PERCENT OF THE TIME. SO2 REMOVAL EFFICIENCY WAS 98 TO 99 PERCENT DURING THIS OPERATING SEG-
			MENT. THE EPA-SPONSORED SCRUBBER/SLUDGE STUDY IS NOW SCHEDULED TO COMMENCE SEPTEMBER 1, 1976.
JUL. 76	100	100	THE UNIT WAS OPERATIONAL PART OF THE TIME DURING THE JULY-AUGUST PERIOD. THE SCRUBBING SYSTEM
AUG. 76	100	100	WAS AVAILABLE TO THE BOILER ON A 100 PERCENT BASIS. NO MAJOR SCRUBBER-RELATED PROBLEMS WERE
			ENCOUNTERED.
SEP. 76	NO DEMAND		THE UNIT DID NOT OPERATE THROUGHOUT SEPTEMBER AND THE FIRST 3 WEEKS OF OCTOBER.
OCT. 76			THE EPA-FUNDED SCRUBBER/SLUDGE STUDY PROGRAM COMMENCED OCTOBER 25. THE INITIAL PHASE OF
			THE PROGRAM CALLS FOR OPERATIONS TO PROCEED FOR A 20 TO 30-DAY PERIOD WITH CARBIDE LIME
			SCRUBBING ABSORBENT. FOLLOWING COMPLETION OF THIS RUN, THE UNIT WILL BE SHUT DOWN AND
			MODIFICATIONS WILL BE INCORPORATED INTO THE SYSTEM FOR OPERATION WITH COMMERCIAL GRADE (HIGH
			CALCIUM) LIME.
NOV. 76	99	99	THE UNIT WAS IN SERVICE DURING THE REPORT PERIOD. THE SCRUBBING SYSTEM OPERATED 99.5 PERCENT
DEC. 76	99	99	OF THE TIME THE BOILER WAS IN SERVICE. CARBIDE LIME WAS EMPLOYED AS THE SO2 ABSORBENT. THE
			HIGH CALCIUM (VIRGIN) LIME RUN, SCHEDULED AS PART OF THE SCRUBBER/SLUDGE STUDY, WILL COMMENCE
			ON MARCH 1, 1977.

TABLE 3
PERFORMANCE DESCRIPTION FOR OPERATIONAL FGD SYSTEMS 12/76

IDENTIFICATION NO.	59
UTILITY NAME	MONTANA POWER CO.
UNIT NAME	COLSTRIP NO 1
UNIT LOCATION	COLSTRIP MONTANA
UNIT RATING	360 MW
FUEL CHARACTERISTICS	COAL 0.8 PERCENT SULFUR
FGD VENDOR	ADL/COMBUSTION EQUIP ASSOCIATE
PROCESS	LIME/ALKALINE FLYASH SCRUBBING
NEW OR RETROFIT	NEW
START UP DATE	10/75
FGD STATUS	OPERATIONAL
EFFICIENCY, PARTICULATES	99 PERCENT
SO2	60 PERCENT
WATER MAKE UP	CLOSED LOOP
SLUDGE DISPOSAL	UNSTABILIZED SLUDGE DISPOSED IN UNLINED POND
UNIT COST	$50/KW CAPITAL
OPERATIONAL EXPERIENCE	THE COLSTRIP PLANT IS A MINE MOUTH INSTALLATION. CONSTRUCTION ON THIS UNIT WAS COMPLETED BEHIND SCHEDULE. THE FGD SYSTEM STARTED UP IN LATE 1975 AND PROCEEDED THROUGH A SHAKEDOWN AND DEBUGGING OPERATION PHASE. THE UNIT HAS BEEN OPERATING AT FULL COMMERCIAL CAPACITY. THE SCRUBBING SYSTEM DESIGN INCORPORATES THE VENTURI WET SCRUBBERS FOR PARTICULATE AND SULFUR DIOXIDE REMOVAL. FLUE GAS CANNOT BE BYPASSED AROUND THE SCRUBBING SYSTEM. INFORMATION AND OPERATING DATA WERE NOT MADE AVAILABLE BY THE UTILITY DURING THE REPORT PERIOD.

TABLE 3
PERFORMANCE DESCRIPTION FOR OPERATIONAL FGD SYSTEMS 12/76

IDENTIFICATION NO.	60
UTILITY NAME	MONTANA POWER CO.
UNIT NAME	COLSTRIP NO 2
UNIT LOCATION	COLSTRIP MONTANA
UNIT RATING	360 MW
FUEL CHARACTERISTICS	COAL 0.8 PERCENT SULFUR
FGD VENDOR	ADL/COMBUSTION EQUIP ASSOCIATE
PROCESS	LIME/ALKALINE FLYASH SCRUBBING
NEW OR RETROFIT	NEW
START UP DATE	7/76
FGD STATUS	OPERATIONAL
EFFICIENCY, PARTICULATES	99 PERCENT
SO2	60 PERCENT
WATER MAKE UP	CLOSED LOOP
SLUDGE DISPOSAL	UNSTABILIZED SLUDGE DISPOSED IN UNLINED POND
UNIT COST	$50/KW CAPITAL
OPERATIONAL EXPERIENCE	THE COLSTRIP PLANT IS A MINE MOUTH FACILITY. CONSTRUCTION OF THE FGD SYSTEM HAS BEEN COMPLETED. TURBINE ROLL AND SYSTEM CHECKOUT HAVE BEEN COMPLETED. INITIAL OPERATION OF THE SCRUBBING SYSTEM COMMENCED IN JULY 1976. THIS UNIT IS IDENTICAL TO THE NO.1 SYSTEM DESIGN IN THAT THREE SCRUBBER MODULES ARE INSTALLED FOR PARTICULATE AND SULFUR DIOXIDE REMOVAL. FLUE GAS CONNOT BE BY-PASSED AROUND THE SCRUBBING SYSTEM. INFORMATION AND OPERATING DATA WERE NOT MADE AVAILABLE BY THE UTILITY DURING THE REPORT PERIOD.

TABLE 3
PERFORMANCE DESCRIPTION FOR OPERATIONAL FGD SYSTEMS 12/76

IDENTIFICATION NO.	67
UTILITY NAME	NEVADA POWER
UNIT NAME	REID-GARDNER NO 1
UNIT LOCATION	MOAPA NEVADA
UNIT RATING	125 MW
FUEL CHARACTERISTICS	COAL 0.5- 1.0 PERCENT SULFUR
FGD VENDOR	ADL/COMBUSTION EQUIP ASSOCIATE
PROCESS	SODIUM CARBONATE SCRUBBING
NEW OR RETROFIT	RETROFIT
START UP DATE	4/74
FGD STATUS	OPERATIONAL
EFFICIENCY, PARTICULATES	99 PERCENT
SO2	85 PERCENT
WATER MAKE UP	OPEN LOOP 1.52 GPM/MW
SLUDGE DISPOSAL	UNSTABILIZED SLUDGE DISPOSED IN UNLINED POND
UNIT COST	$44/KW CAPITAL (1974 DOLLARS) $600,000 ANNUALIZED
OPERATIONAL EXPERIENCE	REFER TO THE BACKGROUND INFORMATION SECTION IN TABLE 3 OF THIS REPORT. THIS SODIUM CARBONATE-BASED (TRONA) SCRUBBING SYSTEM CONSISTS OF ONE MODULE CONTAINING A TWIN VARIABLE-THROAT VENTURI SCRUBBER FOLLOWED BY A SINGLE-STAGE PERFORATED-PLATE WASHING TOWER. THE SCRUBBING TRAIN WAS FIRST PLACED IN OPERATION IN APRIL 1974. THE SYSTEM WAS IN SERVICE THROUGHOUT THE REPORT PERIOD, LOGGING SERVICE TIMES OF 508 HOURS AND 599 HOURS FOR THE MONTHS OF NOVEMBER AND DECEMBER, RESPECTIVELY.

TABLE 3
PERFORMANCE DESCRIPTION FOR OPERATIONAL FGD SYSTEMS 12/76

IDENTIFICATION NO.	68
UTILITY NAME	NEVADA POWER
UNIT NAME	REID GARDNER NO 2
UNIT LOCATION	MOAPA NEVADA
UNIT RATING	125 MW
FUEL CHARACTERISTICS	COAL 0.5- 1.0 PERCENT SULFUR
FGD VENDOR	ADL/COMBUSTION EQUIP ASSOCIATE
PROCESS	SODIUM CARBONATE SCRUBBING
NEW OR RETROFIT	RETROFIT
START UP DATE	4/74
FGD STATUS	OPERATIONAL
EFFICIENCY, PARTICULATES	99 PERCENT
SO2	85 PERCENT
WATER MAKE UP	OPEN LOOP 1.52 GPM/MW
SLUDGE DISPOSAL	UNSTABILIZED SLUDGE DISPOSED IN UNLINED POND
UNIT COST	$44/KW(1974 DOLLARS)* $600,000ANNUALIZED
OPERATIONAL EXPERIENCE	REFER TO THE BACKGROUND INFORMATION SECTION IN TABLE 3 OF THIS REPORT. THIS SODIUM CARBONATE-BASED (TRONA) SCRUBBING SYSTEM CONSISTS OF ONE MODULE CONTAINING A TWIN VARIABLE-THROAT VENTURI SCRUBBER FOLLOWED BY A SINGLE-STAGE PERFORATED-PLATE WASHING TOWER. THE SCRUBBING TRAIN WAS FIRST PLACED IN THE GAS PATH IN APRIL 1974. SYSTEM OPERATION DURING THE REPORT PERIOD WAS INTERMITTENT BECAUSE OF SCRUBBER AND BOILER-RELATED PROBLEMS.

TABLE 3
PERFORMANCE DESCRIPTION FOR OPERATIONAL FGD SYSTEMS 12/76

IDENTIFICATION NO.	69
UTILITY NAME	NEVADA POWER
UNIT NAME	REID GARDNER NO 3
UNIT LOCATION	MOAPA NEVADA
UNIT RATING	125 MW
FUEL CHARACTERISTICS	COAL 0.5- 1.0 PERCENT SULFUR
FGD VENDOR	ADL/COMBUSTION EQUIP ASSOCIATE
PROCESS	SODIUM CARBONATE SCRUBBING
NEW OR RETROFIT	NEW
START UP DATE	7/76
FGD STATUS	OPERATIONAL
EFFICIENCY, PARTICULATES	99 PERCENT
SO2	85 PERCENT
WATER MAKE UP	OPEN LOOP 1.52 GPM/MW
SLUDGE DISPOSAL	UNSTABILIZED SLUDGE DISPOSED IN UNLINED POND
UNIT COST	
OPERATIONAL EXPERIENCE	REFER TO THE BACKGROUND INFORMATION SECTION IN TABLE 3 OF THIS REPORT. THIS UNIT IS A NEW COAL-FIRED BOILER THAT IS EQUIPPED WITH SODIUM CARBONATE-BASED(TRONA)SCRUBBING SYSTEM WHICH INCORPORATES A TWIN VARIABLE-THROAT VENTURI SCRUBBER FOLLOWED BY A SINGLE-STAGE PERFORATED-PLATE WASHING TOWER FOR THE CONTROL OF PARTICULATES AND SULFUR DIOXIDE. THE BOILER COMMENCED OPERATIONS IN APRIL 1976 AND THE SCRUBBER WAS PLACED IN SERVICE THREE MONTHS LATER. THE SYSTEM WAS IN SERVICE THROUGHOUT THE REPORT PERIOD.

BACKGROUND INFORMATION

ON

REID GARDNER UNITS 1, 2, AND 3

THE REID GARDNER POWER STATION IS LOCATED NEAR MOAPA, NEVADA, ABOUT 50 MILES NORTH OF LAS VEGAS. THE STATION HAS THREE ELECTRIC POWER GENERATING UNITS, (REID GARDNER 1, 2, AND 3) EACH RATED AT 125 MW. UNITS 1 AND 2 ARE RETROFITTED WITH SODIUM CARBONATE-BASED FGD SYSTEMS. UNIT NO. 3 IS A NEW INSTALLATION, ALSO EQUIPPED WITH A SODIUM CARBONATE BASED FGD SYSTEM. THE COAL BURNED AT THE PLANT HAS AN AVERAGE GROSS HEATING VALUE OF 12,450 BTU/LB, AND ASH AND SULFUR CONTENTS OF 8 AND 0.5 PERCENT RESPECTIVELY.

THE FGD SYSTEMS INSTALLED ON REID GARDNER UNITS 1,2, AND 3 WERE DESIGNED AND INSTALLED BY COMBUSTION EQUIPMENT ASSOCIATES IN ASSOCIATION WITH A.D. LITTLE. THE SYSTEMS FOR UNITS 1 AND 2 WERE PLACED IN SERVICE IN APRIL 1974. THE SYSTEM FOR UNIT 3 WAS PLACED IN OPERATION ON JULY 12, 1976. THE SCRUBBING SYSTEM DESIGN WAS BASED ON INFORMATION AND DATA OBTAINED FROM AN 8000-ACFM PILOT PLANT PROGRAM CONDUCTED AT THIS STATION IN 1971 AND 1972.

THE FGD SYSTEM CONSISTS OF A SINGLE MODULE, DESIGNED TO HANDLE 473,000 ACFM OF GAS AT 350 F. THE MODULE IS MADE UP OF A TWIN VARIABLE-THROAT VENTURI SCRUBBER, FOLLOWED BY A SINGLE-STAGE WASH TRAY. BYPASSING OF THE MODULE IS POSSIBLE THROUGH A GUILLOTINE-TYPE BY-PASS. A COMMON FACILITY FOR TRONA (SODIUM CARBONATE ORE) STORAGE AND SAND REMOVAL SERVES ALL THE FGD MODULES AT THE REID GARDNER PLANT. SULFUR DIOXIDE REMOVAL EFFICIENCY IS REPORTED TO BE 85 PERCENT. PRIMARY PARTICULATE REMOVAL IS ACCOMPLISHED BY 75 PERCENT EFFICIENT MERCHANICAL COLLECTORS INSTALLED UPSTREAM OF THE WET SCRUBBERS. THE TOTAL PARTICULATE REMOVAL EFFICIENCY OF THE MECHANICAL COLLECTION AND WET SCRUBBING SYSTEM EXCEEDS THE 99 PERCENT LEVEL.

IN THIS SODIUM CARBONATE PROCESS, HOT FLUE GAS FROM THE BOILER PASSES FIRST THROUGH THE MECHANICAL COLLECTORS WHERE PRIMARY PARTICULATE REMOVAL TAKES PLACE. PRESSURE IS THEN BOOSTED BY AN INDUCED DRAFT FAN BEFORE THE GAS STREAM SPLITS AS IT ENTERS THE TWIN-THROAT VENTURI SCRUBBER. THE HOT FLUE GAS IS QUENCHED BY A SHOWER OF CIRCULATED SODIUM BASE LIQUOR. THE GAS THEN ENTERS THE WASH TRAY AND BUBBLES THROUGH THE RADIAL-VANE MIST ELIMINATOR, WHERE THE REMAINING LIQUID DROPLETS CARRIED OVER WITH THE GAS ARE TRAPPED AND REMOVED.

EFFLUENT FROM THE FGD SYSTEM IS FROM TWO SOURCES* THE SLIP STREAM OF SPENT LIQUOR DISCHARGED FROM THE RECIRCULATION TANK, AND THE ALKALINE CLARIFIER UNDERFLOW, WHICH SERVES TO NEUTRALIZE THE PH OF THE COMBINED LIQUOR BEFORE IT IS DISCHARGED TO THE SLUDGE SETTLING PONDS. THE SPENT LIQUOR IS PUMPED INTO ONE OF TWO SETTLING PONDS. THE OVERFLOW FROM THIS POND IS PUMPED TO A LARGER 45-ACRE POND, WHERE THE BRINE IS EVAPORATED. THE FGD SYSTEM OPERATES ON AN OPEN WATER LOOP WITH NO LIQUOR RECYCLED TO THE

MODULES FROM THE PONDS.

ADDITIONAL INFORMATION CONCERNING THE PERFORMANCE OF THE SCRUBBERS INSTALLED AT THE REID GARDNER STATION, INCLUDING PROBLEMS, SOLUTIONS, AND MODIFICATIONS, ARE PRESENTED IN THE FOLLOWING TABLES. IN ADDITION, A GENERAL PROCESS FLOW DIAGRAM OF THE SODIUM CARBONATE SCRUBBING SYSTEM IS PRESENTED IN FIGURE 15 OF APPENDIX C.

PERIOD	TOTAL (HR.)	BOILER OPERATION (HR.)	AVAILABILITY (HR.)	HR. CALLED UPON TO OPERATE	OPERATION (HR.)	COMMENTS
						DURING FEBRUARY THE FGD SYSTEM OPERATED WITH 95 PERCENT AVAILA-
MAR. 75						BILITY ON TRONA SUPPLEMENTED WITH SODA ASH. AVAILABILITY IN
APR. 75						JANUARY WAS ONLY ABOUT 65 PERCENT BECAUSE OF FROZEN SODIUM
MAY 75						CARBONATE FEED LINES. PROBLEMS IN FEBRUARY INCLUDED A 2-DAY
JUN. 75						LACK OF CHEMICALS. NO SIGNIFICANT PROBLEMS OCCURRED IN MARCH.
						THE UNIT RAN APRIL 1 THROUGH APRIL 12 WITH 100 PERCENT AVAILA-
						BILITY. THE BOILER WAS THEN SHUT DOWN FOR ROUTINE MAINTENANCE.
						THE SYSTEM WAS PLACED BACK ON LINE MAY 12. SECOND PERFORMANCE
						TEST WAS PASSED. PROBLEMS INCLUDED AN ABRASION OF RUBBER-LINED
						PIPES AND ROUTINE MECHANICAL AND INSTRUMENTAL PROBLEMS. HIGH ASH
						CONTENT, UP TO 20 PERCENT, HAD NO EFFECT ON EMISSIONS.
JUL. 75						OPERABILITY FOR THE MONTH OF JULY WAS 85 PERCENT.
AUG. 75						
SEP. 75	720	716			559	OF FOUR FORCED OUTAGES, THREE WERE CAUSED BY SCRUBBER MALFUNC-
OPERABILITY = 78%						TIONS.
UTILIZATION = 78%						
OCT. 75	744	303			106	LOW OPERATING TIME WAS DUE TO SCHEDULED BOILER MAINTENANCE. ONE
OPERABILITY = 60%						OUTAGE WAS DUE TO THE MALFUNCTION OF A SODA ASH BLOWER.
UTILIZATION = 14%						
NOV. 75	720	654			394	THE UTILITY REPORTS SYSTEM PERFORMANCE IN TERMS OF THE OPERA-
OPERABILITY = 60%						BILITY INDEX. UNIT NO. 1 OPERABILITY WAS LOW FOR THE MONTH OF
UTILIZATION = 55%						NOVEMBER BECAUSE OF DELAYS IN DELIVERY OF REPAIR MATERIALS.
DEC. 75						THREE FORCED OUTAGES DURING THE MONTH WERE DUE TO REHEATER STEAM

PERIOD	TOTAL (HR.)	BOILER OPERATION (HR.)	AVAILABILITY (HR.)	HR. CALLED UPON TO OPERATE	OPERATION (HR.)	COMMENTS
						LEAKS, COLLAPSE OF A VENTURI STRAINER, AND A FROZEN CARBONATE LIME. THE SYSTEM WAS SHUT DOWN FOR 16 DAYS FOR COMPLETION OF PIPING CONVERSION* THIS OUTAGE WAS NOT DUE TO SCRUBBER MALFUNCTION.
JAN. 76	744	647	604	327	186.08	
AVAILABILITY = 81%						
OPERABILITY = 29%						
RELIABILITY = 57%						
UTILIZATION = 25%						
FEB. 76	696	664	631	585	520	THE UTILITY REPORTED FIVE SCRUBBER INOPERATIVE PERIODS DURING THE MONTH OF FEBRUARY, TWO OF WHICH WERE SCRUBBER RELATED OUTAGES. THE FORCED SCRUBBER OUTAGES OCCURRED BECAUSE A DEPLETION OF CHEMICAL, CHEMICAL LINE PLUGGING AND SEAL WATER PROBLEMS.
AVAILABILITY = 91%						
OPERABILITY = 78%						
RELIABILITY = 89%						
UTILIZATION = 75%						
MAR. 76	744	398	743	288	287	ONLY ONE FORCED SCRUBBER OUTAGE OCCURRED DURING THE MONTH BECAUSE OF A VENTURI LEAK.
AVAILABILITY = 99%						
OPERABILITY = 72%						
RELIABILITY = 99%						
UTILIZATION = 39%						
APR. 76	720	106	106	97	97	THE BOILER WAS TAKEN OUT OF SERVICE APRIL 5 FOR INSPECTION OF VALVES AND COAL CONDUITS.
AVAILABILITY = 15%						
OPERABILITY = 91%						
RELIABILITY = 100%						
UTILIZATION = 13%						

PERIOD	TOTAL (HR.)	BOILER OPERATION (HR.)	AVAILABILITY (HR.)	HR. CALLED UPON TO OPERATE	OPERATION (HR.)	COMMENTS
MAY 76						
JUN. 76						THE NO. 1 UNIT WAS SHUT DOWN THE ENTIRE MONTH FOR A SCHEDULED TURBINE OVERHAUL AND BURNER LINE CONDUIT REPLACEMENT.
JUL. 76						THE NO. 1 UNIT REMAINED OUT OF SERVICE THROUGHOUT THE MONTH FOR COMPLETION OF THE TURBINE AND BOILER OVERHAUL WHICH COMMENCED THE PRECEDING MONTH.
AUG. 76	744	479	719	386	360	TWO FORCED SCRUBBER OUTAGES OCCURRED DURING THE MONTH ATTRIBUTED TO PLUGGING IN THE TRAY RECYCLE TANK AND THICKENER TANK. TOTAL BOILER OUTAGE TIME FOR THE MONTH EXCEEDED 265 HOURS.
AVAILABILITY = 97%						
OPERABILITY = 75%						
RELIABILITY = 94%						
UTILIZATION = 49%						
SEP. 76	720	656	683	676	639	TWO FORCED SCRUBBER OUTAGES WERE REPORTED BY THE UTILITY FOR THE MONTH. THESE MINOR OUTAGES WERE CAUSED BY PLUGGING IN THE VENTURI SPRAY HEADERS AND AN I.D. FAN MALFUNCTION. TOTAL FORCED OUTAGE TIME AMOUNTED TO 36.84 HOURS.
AVAILABILITY =95%						
OPERABILITY = 97%						
RELIABILITY = 95%						
UTILIZATION = 89%						
OCT. 76	744	678	728	664	648	SCRUBBER OUTAGE TIME WAS REQUIRED FOR INSTALLATION OF A NEW CARBONATE FEED LINE. IN ADDITION, A MINOR SCRUBBER TRIP WAS CAUSED BY PLUGGING IN THE SCRUBBER EFFLUENT SUCTION LINE.
AVAILABILITY =98%						
OPERABILITY = 96%						
RELIABILITY = 98%						
UTILIZATION = 87%						

PERIOD	TOTAL HR.	BOILER OPERATION HR.	AVAILABILITY HR.	HR. CALLED UPON TO OPERATE	OPERATION HR.	COMMENTS
NOV. 76	720	631.5	623	605	508	ONE FORCED SCRUBBER OUTAGE OCCURRED DURING THE REPORT PERIOD BECAUSE OF A SCREW CONVEYOR FAILURE, RESULTING IN AN INABILITY TO MIX THE CHEMICAL ABSORBENT.
AVAILABILITY = 87%						
RELIABILITY = 84%						
OPERABILITY = 81%						
UTILIZATION = 71%						
DEC. 76	744	677.4	690	652.5	599	TWO FORCED SCRUBBER OUTAGES OCCURRED DURING DECEMBER BECAUSE OF CHEMICAL DEPLETION AND A PLUGGED SENSING LINE.
AVAILABILITY = 93%						
RELIABILITY = 92%						
OPERABILITY = 88%						
UTILIZATION = 80%						

PERIOD	TOTAL (HR.)	BOILER OPERATION (HR.)	AVAILABILITY (HR.)	HR. CALLED UPON TO OPERATE	OPERATION (HR.)	COMMENTS
FEB. 75						DURING FEBRUARY THE FGD SYSTEM OPERATED WITH 90 PERCENT OPERA-
MAR. 75						BILITY ON TRONA SUPPLEMENTED WITH SODA ASH. PROBLEMS INCLUDED
APR. 75						A PLUGGED RECYCLE LINE STRAINER, SEAL WATER FILTERS, AND BOILER
MAY 75						CONTROLS. UNIT HAS RESTARTED AFTER SHUTDOWN FOR 5-YEAR TURBINE
JUN. 75						OVERHAUL. SECOND PERFORMANCE TEST WAS PASSED. PROBLEMS
						INCLUDED ABRASION OF RUBBER-LINED PIPES AND ROUTINE MECHANICAL
						AND INSTRUMENTAL PROBLEMS. HIGH ASH CONTENT, UP TO 20%, HAD NO
						EFFECT ON EMISSIONS.
JUL. 75						THE FGD SYSTEM OPERABILITY FOR THE MONTH OF JULY WAS 85 PERCENT.
AUG. 75						
SEP. 75	720	645			496	THREE FORCED SCRUBBER OUTAGES OCCURRED BECAUSE OF STRAINER
OPERABILITY = 77%						PLUGGING, BROKEN BUCKET ELEVATOR, WORN RECIRCULATION PIPING, AND
UTILIZATION = 69%						RUBBER LINER LEAKAGE.
OCT. 75	744	531			464	THREE FORCED SCRUBBER OUTAGES WERE REPORTED FOR THE MONTH OF
						OCTOBER BECAUSE OF PUMP REPAIR, INSTRUMENT PLUGGING, AND REPAIR
						OF SYSTEM PIPING LEAKAGE.
NOV. 75	720	603			596	THE UTILITY PREFERS TO REPORT SYSTEM PERFORMANCE IN TERMS OF THE
OPERABILITY = 99%						OPERABILITY INDEX BECAUSE OF EASE OF CALCULATION, REQUIRES NO
UTILIZATION = 83%						JUDGMENT, AND REFLECTS THE ACTUAL PERFORMANCE OF THE FGD SYSTEMS
						ACCURATELY IF THE REASONS FOR DOWNTIME ARE KNOWN.
DEC. 75						
JAN. 76	744	691	535	691	458	BOILER WAS OUT OF SERVICE A TOTAL OF 3 DAYS DURING THE MONTH.
AVAILABILITY = 72%						SCRUBBER OUTAGES WERE CAUSED BY FROZEN CARBONATE LINES, PLUGGED
RELIABILITY = 66%						PRESSURE-SENSING LINES, DUCT PRESSURE TRIPS, AND OVERHAUL OF A
				HR.		

PERIOD	TOTAL (HR.)	BOILER OPERATION (HR.)	AVAILABILITY (HR.)	CALLED UPON TO OPERATE	OPERATION (HR.)	COMMENTS
OPERABILITY = 66%						TRAY RECYCLE PUMP.
UTILIZATION = 62%						
FEB. 76	696	675	582	675	578	THE UTILITY REPORTED FOUR SCRUBBER INACTIVE PERIODS DURING THE MONTH, THREE OF WHICH WERE SCRUBBER-RELATED OUTAGES. THE FORCED SCRUBBER OUTAGES OCCURRED BECAUSE OF PLUGGING IN A VENTURI PUMP, DEPLETION OF CHEMICAL, CHEMICAL LINE PLUGGING, AND SEAL WATER PROBLEMS.
AVAILABILITY = 84%						
RELIABILITY = 86%						
OPERABILITY = 86%						
UTILIZATION = 83%						
MAR. 76	744	660	495	633	395	TWO FORCED SCRUBBER OUTAGES WERE REPORTED FOR THE MONTH BECAUSE OF AN ELECTRICAL FAILURE AND PLUGGING IN THE TRAY SYSTEM RESULTING IN A SUBSEQUENT OVERHAUL OF THE TRAY RECYCLE PUMPS.
AVAILABILITY = 67%						
RELIABILITY = 62%						
OPERABILITY = 60%						
UTILIZATION = 53%						
APR. 76	720	629	622	584	488	FOUR FORCED SCRUBBER OUTAGES WERE REPORTED BY THE UTILITY FOR APRIL. PROBLEMS ENCOUNTERED WERE* PLUGGED SENSING LINES, A REHEATER LEAK, VENTURI SPOOL RECYCLE REPLACEMENT AND TANK PATCHING.
AVAILABILITY = 86%						
RELIABILITY = 83%						
OPERABILITY = 77%						
UTILIZATION = 68%						
MAY 76						
JUN. 76	720	682	714	579	568	PROBLEMS ENCOUNTERED DURING THE MONTH INCLUDED PLUGGED VENTURI LINES AND A PLUGGED SENSING LINE. TOTAL SCRUBBER OPERATION TIME TO DATE IS 9,488 HOURS.
AVAILABILITY = 99%						
RELIABILITY = 98%						
OPERABILITY = 83%						
UTILIZATION = 79%						

PERIOD	TOTAL (HR.)	BOILER OPERATION (HR.)	AVAILABILITY (HR.)	HR. CALLED UPON TO OPERATE	OPERATION (HR.)	COMMENTS
JUL. 76	744	518	676	43	421	TWO FORCED SCRUBBER OUTAGES WERE REPORTED DURING THE MONTH. A PROBLEM WITH A HIGH SOLIDS CONCENTRATION IN THE VENTURI SCRUBBING CYCLE AND THE REPLACEMENT OF A RUBBER-LINED PIPE IN THE VENTURI SCRUBBER RESULTED IN AN OUTAGE TIME OF APPROXIMATELY 19 HOURS.
AVAILABILITY = 91%						
RELIABILITY = 96%						
OPERABILITY = 81%						
UTILIZATION = 57%						
AUG. 76	744	709	710	564	530	FORCED SCRUBBER OUTAGE TIME TOTALLED 34.5 HOURS. TWO TRIPS OCCURRED DURING THE MONTH BECAUSE OF LEAKAGE IN THE VENTURI RECYCLE LINE AND PLUGGING IN THE THICKENER TANK. THE REMAINING SCRUBBER OUTAGE TIME DURING THE MONTH RESULTED FROM DEPLETION OF CHEMICAL ABSORBENT (TRONA) AND BOILER TRIPS.
AVAILABILITY = 95%						
RELIABILITY = 94%						
OPERABILITY = 75%						
UTILIZATION = 71%						
SEP. 76	720	681	677	697	653	TWO FORCED SCRUBBER OUTAGES, TOTALING 43.5 HOURS OF OUTAGE TIME, WERE REPORTED BY THE UTILITY DURING THE MONTH. MINOR TRIPS WERE CAUSED BY PLUGGING IN THE I.D. FAN REFERENCE LINES AND A FALSE HIGH TEMPERATURE READING IN THE VENTURI CAUSED BY WATER IN THE INSTRUMENT.
AVAILABILITY = 94%						
RELIABILITY = 94%						
OPERABILITY = 96%						
UTILIZATION = 91%						
OCT. 76	744	694	708	692	656	TOTAL FORCED OUTAGE TIME FOR THE MONTH AMOUNTED TO APPROXIMATELY 36 HOURS. SCRUBBER TRIPS WERE CAUSED BY VENTURI GAS DAMPER PROBLEMS, PLUGGING IN THE SCRUBBER EFFLUENT LINE, AND REPLACEMENT OF THE CARBONATE FEED LINE. SCRUBBER OUTAGE TIME DUE TO BOILER TRIPS AMOUNTED TO APPROXIMATELY 65 HOURS.
AVAILABILITY = 95%						
RELIABILITY = 95%						
OPERABILITY = 95%						
UTILIZATION = 88%						

	TOTAL HR.	BOILER OPERATION HR.	AVAILABILITY HR.	HR. CALLEDD UPON TO OPERATE	OPERATION HR.	
NOV. 76	720	621	374	709	363	DURING A BOILER OUTAGE TO REPAIR A CONDENSER TUBE LEAK AND BOTTOM ASH NOZZLE, THE SCRUBBER'S GUILLOTINE DAMPERS WERE BADLY DAMAGED, AND THE SCRUBBER REMAINED OUT OF SERVICE DURING THE MONTH OF DECEMBER.
AVAILABILITY = 52%						
RELIABILITY = 51%						
OPERABILITY = 58%						
UTILIZATION = 50%						
DEC. 76	744	275	0	0	0	
AVAILABILITY = 0%						
RELIABILITY = 0%						
OPERABILITY = 0%						
UTILIZATION = 0%						

PERIOD	TOTAL (HR.)	BOILER OPERATION (HR.)	AVAILABILITY (HR.)	HR. CALLED UPON TO OPERATE	OPERATION (HR.)	COMMENTS
JUL. 76	744	692	335	449	316	COMMERCIAL OPERATION COMMENCED ON JULY 12, 1976. FOUR OUTAGES WERE REPORTED FOR THE MONTH, THREE OF WHICH WERE FORCED SCRUBBER OUTAGES. PROBLEMS WERE ENCOUNTERED WITH A BUCKET ELEVATOR MALFUNCTION AND A HIGH SOLIDS CONCENTRATION IN THE VENTURI SCRUBBING SOLUTION CYCLE.
AVAILABILITY = 45%						
RELIABILITY = 70%						
OPERABILITY = 46%						
UTILIZATION = 42%						
AUG. 76	744	744	420	647	323	FORCED SCRUBBER OUTAGES RESULTED FROM AN I.D. FAN ELECTRICAL MALFUNCTION, I.D. FAN INSULATION, THICKENER TANK PLUGGING, REHEATER MOTOR BURNOUT AND DESTRUCTION OF THE VENTURI FLOOR.
AVAILABILITY = 56%						
RELIABILITY = 50%						
OPERABILITY = 43%						
UTILIZATION = 43%						
SEP. 76	720	679	352	682	314	THE SYSTEM WAS PLACED BACK IN SERVICE ON SEPTEMBER 14 FOLLOWING EXTENSIVE REPAIRS AND MODIFICATIONS FROM THE PRECEDING MONTH. THREE MINOR SCRUBBER TRIPS WERE ENCOUNTERED THROUGHOUT THE DURATION OF THE MONTH. PROBLEMS REPORTED BY THE UTILITY WERE TWO REHEATER FAN TRIPS AND A VENTURI VIBRATION TRIP.
AVAILABILITY = 49%						
RELIABILITY = 46%						
OPERABILITY = 46%						
UTILIZATION = 44%						
OCT. 76	744	548	160	743	159	THREE FORCED SCRUBBER OUTAGES WERE REPORTED FOR THE MONTH. TRIPS OCCURRED BECAUSE OF HIGH SOLIDS CONTENT IN THE VENTURI RECYCLE SOLUTION, A SCRUBBER GAS DAMPER MALFUNCTION, AND VENTURI BOX
AVAILIBILITY = 22%						
RELIABILITY = 21%						

PERIOD	TOTAL HR.	BOILER OPERATION HR.	AVAILABILITY HR.	HR. CALLED UPON TO OPERATE	OPERATION HR.	COMMENTS
NOV. 76	720	264	205	727	212	THE SCRUBBER SYSTEM WAS NOT IN OPERATION THE FIRST HALF OF NOVEMBER DUE TO REPAIRS OF LEAKS IN THE VENTURI SCRUBBER BOX. THE SYSTEM WAS RESTARTED NOV. 19, AND EXPERIENCED ONE FURTHER FORCED OUTAGE, BECAUSE OF A SCREW CONVEYOR MALFUNCTION, PREVENTING CHEMICAL MIXING.
AVAILABILITY = 28%						
RELIABILITY = 29%						
OPERABILITY = 80%						
UTILIZATION = 29%						
DEC. 76	744	744	737	728	721	DURING THE MONTH, ONE MINOR SCRUBBER OUTAGE, OCCURRED, BECAUSE OF REPAIRS TO THE I.D. FAN EXPANSION JOINT.
AVAILABILITY = 99%						
RELIABILITY = 99%						
OPERABLIITY = 97%						
UTILIZATION = 97%						

TABLE 3
PERFORMANCE DESCRIPTION FOR OPERATIONAL FGD SYSTEMS 12/76

IDENTIFICATION NO.	78
UTILITY NAME	NORTHERN STATES POWER CO.
UNIT NAME	SHERBURNE COUNTY STATION NO.1
UNIT LOCATION	BECKER MINNESOTA
UNIT RATING	710 MW
FUEL CHARACTERISTICS	COAL 0.8 PERCENT SULFUR
FGD VENDOR	COMBUSTION ENGINEERING
PROCESS	LIMESTONE SCRUBBING
NEW OR RETROFIT	NEW
START UP DATE	3/76
FGD STATUS	OPERATIONAL
EFFICIENCY, PARTICULATES	99 PERCENT GUARANTEE
SO2	50 PERCENT GUARANTEE
WATER MAKE UP	OPEN LOOP 1.13 GPM/MW
SLUDGE DISPOSAL	UNSTABILIZED SLUDGE DISPOSED IN LINED POND
UNIT COST	$60 MILLION CAPITAL FOR UNITS 1 AND 2
OPERATIONAL EXPERIENCE	REFER TO THE BACKGROUND INFORMATION SECTION IN TABLE 3 OF THIS REPORT. A PRELIMINARY WATER/AIR SYSTEM CHECKOUT WAS SUCCESSFULLY COMPLETED BY THE UTILITY AND INITIAL OPERATIONS COMMENCED ON MARCH 16, 1976. FULL COMMERCIAL OPERATION OF THE SYSTEM BEGAN ON MAY 1, 1976. THE SCRUBBING SYSTEM FOR THIS UNIT CONSISTS OF 12 MODULES. EACH SCRUBBING MODULE INCORPORATES A VENTURI-ROD SECTION AND A MARBLE BED ABSORBER FOR PARTICULATE AND SULFUR DIOXIDE REMOVAL. SYSTEM DESIGN CALLS FOR 11 MODULES TO BE IN OPERATION FOR FULL LOAD CAPACITY.

BACKGROUND INFORMATION

ON

SHERBURNE COUNTY GENERATING PLANT

THE SHERBURNE COUNTY GENERATING PLANT OF THE NORTHERN STATES POWER COMPANY IS LOCATED ON THE MISSISSIPPI RIVER IN SHERBURNE COUNTY, NEAR BECKER, MINNESOTA. THIS NEW POWER GENERATING PLANT CURRENTLY HAS ONE COAL-FIRED UNIT OPERATIONAL, ONE UNDER CONSTRUCTION, AND TWO IN THE EARLY PLANNING STAGES. UNIT NO. 1 IS RATED AT 710-MW AND FIRES MONTANA COLSTRIP COAL WITH A HEATING VALUE OF 8300 BTU/LB, AND SULFUR AND ASH CONTENTS OF 0.8 AND 9.0 PERCENT, RESPECTIVELY. IN ORDER TO MEET PARTICULATE AND SULFUR DIOXIDE EMISSION STANDARDS WHICH ARE MORE STRINGENT THAN NEW SOURCE PERFORMANCE STANDARDS, THE UNIT WAS FITTED WITH A SCRUBBING SYSTEM FOR SIMULTANEOUS PARTICULATE AND SULFUR DIOXIDE REMOVAL.

THE NORTHERN STATES POWER CO., SHERBURNE NO. 1 SCRUBBER DESIGN IS BASED UPON THE RESULTS OF A PILOT PLANT TEST PROGRAM CONDUCTED AT COMBUSTION ENGINEERING'S (CE) KREISINGER DEVELOPMENT LABORATORY AND A PROTOTYPE SCRUBBER PROGRAM CONDUCTED JOINTLY BY COMBUSTION ENGINEERING AND NORTHERN STATES POWER AT THE UTILITY'S BLACK DOG STATION. THE SCRUBBING SYSTEM IS COMPRISED OF A FIRST STAGE FIXED-ROD VENTURI SCRUBBER FOR PARTICULATE REMOVAL AND A MARBLE BED ABSORBER TO COMPLETE PARTICULATE REMOVAL AND ACHIEVE THE NECESSARY SULFUR DIOXIDE REMOVAL. THE SCRUBBING SYSTEM HAS BEEN GUARANTEED TO REMOVE 99 PERCENT OF THE PARTICULATE MATTER ENTERING THE SCRUBBING SYSTEM, OR MAINTAIN AN EMISSION 0.04 GR/DSCF, WHICHEVER OUTLET VALUE IS GREATER. THE SULFUR DIOXIDE DESIGN REMOVAL EFFICIENCY IS BASED UPON THE REMOVAL OF 50 PERCENT OF THE SULFUR IN THE FUEL (MAXIMUM FUEL SULFUR CONTENT OF 1.2 PERCENT) OR MAINTAIN AN EMISSION OF 200 PPM, WHICHEVER OUTLET VALUE IS GREATER.

THE GENERAL SCENARIO OF THE SHERBURNE NO. 1 SCRUBBING SYSTEM CONSISTS OF 12 SCRUBBING MODULES, 11 OF WHICH ARE REQUIRED FOR FULL LOAD CAPACITY. EACH MODULE HAS A RATED FLUE GAS CAPACITY OF 200,000 TO 220,000 ACFM AT 135 F. AN AGITATED REACTION TANK IS LOCATED AT THE BOTTOM OF EACH SCRUBBER MODULE. THE PURPOSE OF THE REACTION TANK IS TO ALLOW COMPLETION OF SULFUR DIOXIDE FORMATION TO SULFITE, PROVIDE FORCED OXIDATION OF SULFITE TO SULFATE, AND FACILITATE PRECIPITATION OF CALCIUM SULFATE SOLIDS. IN FORCED OXIDATION, AIR IS BUBBLED INTO THE REACTION TANK, OXIDIZING SULFITE TO SULFATE. THE SULFATE FORMED IS PRECIPITATED IN THE REACTION TANK BY ADDITION OF GYPSUM SEED CRYSTALS. A BLEED LINE PROVIDES THE NECESSARY SOLIDS REMOVAL TO A 160-FOOT DIAMETER CLARIFIER. HERE THE WASTE SOLIDS (FLY ASH, CALCIUM CARBONATE, AND CALCIUM SULFATE) SETTLE OUT AND THE CLARIFIED WATER IS RETURNED TO THE PROCESS.

THE CLEANED FLUE GAS THEN PASSES THROUGH A DOUBLE ROW, TWO-PASS CHEVRON MIST ELIMINATOR. REHEAT (T = 40) IS ADDED TO THE GAS STREAM TO PROVIDE PROTECTION TO THE DOWNSTREAM DUCTWORK, I.D. FAN, AND PLUME CONTROL BEFORE FINAL DISCHARGE TO THE ATMOSPHERE. THE CLARIFIER UNDERFLOW IS PUMPED TO AN 18-INCH CLAY-LINED SETTLING POND WHICH IS 45-FEET DEEP AND 62 ACRES IN AREA. THE WATER IS

RECYCLED FROM THE POND BACK TO THE PROCESS. A GENERAL FLOW DIAGRAM OF THE SHERBURNE SCRUBBER ARRANGEMENT IS PROVIDED IN FIGURE 16 OF APPENDIX C.

INITIAL OPERATION OF THE SYSTEM COMMENCED MARCH 16, 1976. FULL COMMERCIAL OPERATION COMMENCED MAY 1, 1976. PROBLEMS ENCOUNTERED DURING INITIAL STARTUP OPERATIONS HAVE INCLUDED THE USUAL MECHANICAL PROBLEMS ASSOCIATED WITH A NEW SYSTEM AND SOME PLUGGING IN THE SCRUBBER INTERVALS. SPECIFICALLY, PROBLEMS HAVE BEEN ENCOUNTERED IN THE SPRAY SYSTEM, REQUIRING THE DESIGN OF THE NOZZLES TO BE CHANGED FROM PLASTIC AND RUBBER COMPONENTS TO CERAMIC SPINNER-VANE COMPONENTS. ALSO, SOME PLUGGING PROBLEMS HAVE BEEN ENCOUNTERED IN THE SPRAY HEADERS, PRIMARY CONTACTOR, AND MARBLE BED. THIS HAS STEMMED LARGELY FROM THE MALFUNCTION OF THE STRAINER SYSTEM BECAUSE OF POOR NOZZLE CONFIGURATIONS. NSP IS CURRENTLY MAKING MODIFICATIONS IN THIS AREA.

BOILER OPERATION TIME AND MODULE OPERABILITY

PERIOD	BOILER HR.	101	102	103	104	105	106	107	108	109	110	111	112
MAR. 76													
APR. 76													
MAY 76													
JUN. 76													
JUL. 76													
AUG. 76													

COMMENTS

A PRELIMINARY SYSTEM CHECKOUT BY PASSING WATER AND AIR THROUGH THE SYSTEM WAS SUCCESSFULLY COMPLETED. THE SYSTEM WAS INITIALLY PLACED IN SERVICE MARCH 16, 1976. FIRST COMMERCIAL OPERATION COMMENCED MAY 1, 1976. THIS IS AN INTERMEDIATE LOAD UNIT, OPERATING AT OR NEAR FULL CAPACITY DURING THE DAY AND 35 PERCENT CAPACITY AT NIGHT. MODIFICATIONS ARE PROCEEDING ON THE SPRAY SYSTEM, SPRAY NOZZLES, AND STRAINER SYSTEM.

DEVELOPMENTAL WORK IS CONTINUING ON THIS SCRUBBING SYSTEM. SINCE JULY 1, THE NO. 1 UNIT HAS BEEN GENERATING 95 TO 98 PERCENT THE NUMBER OF MW-HOURS THAT HAVE BEEN REQUIRED. THE NO. 1 UNIT IS AN INTERMEDIATE LOAD UNIT WHICH OPERATES AT FULL CAPACITY 15-16 HOURS/DAY AND ONE-THIRD CAPACITY THE REMAINDER. PLUGGING IN THE SLURRY NOZZLES IS STILL A PROBLEM. A QUARTER-INCH PARTICLE IN THE FEED SOLUTION WILL PLUG UP THE FEED NOZZLES. NSP IS NOW PLANNING TO MODIFY THE DUPLEX STRAINER SYSTEM TO ALLEVIATE THIS PROBLEM. IN ADDITION, THE DEPOSITION OF SOFT SOLIDS IS STILL CONTINUING IN THE DEMISTERS AND REHEATERS. HARD SCALE GYPSUM FORMATION ON THE VESSEL WALLS HAS LEVELED OFF. A CREW OF 70 PEOPLE IS REQUIRED TO MAINTAIN

BOILER OPERATION TIME AND MODULE OPERABILITY

PERIOD	BOILER HR.	101	102	103	104	105	106	107	108	109	110	111	112
SEP. 76	566	87	90	93	76	76	79	85	79	85	80	92	96
TOTAL SYSTEM AVAILABILITY = 95 PERCENT													
TOTAL SYSTEM OPERABILITY = 100.0 PERCENT													
OCT. 76	606	97	84	96	96	95	30	74	76	91	81	100	87
TOTAL SYSTEM AVAILABILITY = 93 PERCENT													
TOTAL SYSTEM OPERABILITY = 100 PERCENT													

COMMENTS

SCRUBBER OPERATIONS. THE PREVENTIVE MAINTENANCE AND CLEANING PROCEDURES NOW EMPLOYED FOR THE SCRUBBING SYSTEM CALLS FOR 3 TO 4 MODULES TO BE TAKEN OUT OF SERVICE EACH NIGHT. THEREFORE, EACH MODULE IS CLEANED OUT ONCE EVERY THREE DAYS. THE TOTAL SYSTEM AVAILABILITY INDEX IS DEFINED AS THE AMOUNT OF TIME 11 MODULES ARE AVAILABLE TO THE UNIT, THUS ALLOWING FULL LOAD CAPACITY CAPABILITY. TOTAL SYSTEM OPERABILITY HAS TO BE 100 PERCENT SINCE THE SCRUBBERS CANNOT BE BYPASSES TO OPERATE THE BOILER. NSP IS NOW IN THE PROCESS OF MODIFYING THE SYSTEM'S STRAINER DESIGN. THE DUPLEX UNITS ARE GOING TO BE RETIRED AND REPLACED WITH IN-THE-TANK SCREENS AND SOOT BLOWERS, BOTH LOCATED AT THE SUCTION SIDE OF THE RECYCLE PUMP. CARBON STEEL FIN TUBE REHEAT BUNDLES ARE ALSO AN AREA OF CONCERN. MULTIPLE FAILURES IN FOUR UNITS HAVE BEEN EXPERIENCED.

BOILER OPERATION TIME AND MODULE AVAILABILITY

PERIOD	BOILER HR.	101	102	103	104	105	106	107	108	109	110	111	112
NOV. 76	720	83	80	87	79	92	80	93	89	69	78	73	93
TOTAL SYSTEM AVAILABILITY = 93 PERCENT													
TOTAL SYSTEM OPERABILITY = 100 PERCENT													
DEC. 76	722	88	84	87	80	71	97	91	95	94	88	73	75
TOTAL SYSTEM AVAILABILITY = 95 PERCENT													
TOTAL SYSTEM OPERABILITY = 100 PERCENT													

COMMENTS

THE MODIFICATION OF THE DUPLEX STRAINER SYSTEM IS ONGOING, CURRENTLY APPROXIMATELY ONE-THIRD COMPLETED ON THE NO. 1 UNIT. THE UTILITY IS NOW CONDUCTING A FULL-LOAD EVALUATION STUDY, ANALYZING SYSTEM OPERATION ON 10 MODULES VS. THE DESIGNED 11 MODULES. THE UNIT IS CURRENTLY HAVING DIFFICULTY COMPLYING WITH THE 20 PERCENT OPACITY REGUALTION, DUE TO THE EXTREMELY FINE FLY ASH BEING EMITTED (70 PERCENT LESS THAN ONE MICRON.)

TABLE 3
PERFORMANCE DESCRIPTION FOR OPERATIONAL FGD SYSTEMS 12/76

IDENTIFICATION NO.	84
UTILITY NAME	PENNSYLVANIA POWER CO.
UNIT NAME	BRUCE MANSFIELD NO. 1
UNIT LOCATION	SHIPPINGPORT PENNSYLVANIA
UNIT RATING	835 MW
FUEL CHARACTERISTICS	COAL 4.7 PERCENT SULFUR
FGD VENDOR	CHEMICO
PROCESS	LIME SCRUBBING
NEW OR RETROFIT	NEW
START UP DATE	4/76
FGD STATUS	OPERATIONAL
EFFICIENCY, PARTICULATES	99.8 PERCENT
SO2	92 PERCENT GUARANTEE
WATER MAKE UP	CLOSED LOOP
SLUDGE DISPOSAL	STABILIZED SLUDGE DISPOSED IN UNLINED POND
UNIT COST	$133/KW CAPITAL * 2.7 MILLS/ KWH ANNUALIZED
OPERATIONAL EXPERIENCE	REFER TO THE BACKGROUND INFORMATION SECTION IN TABLE 3 OF THIS REPORT. THIS EMISSION CONTROL SYSTEM IS CAPABLE OF REMOVING FLYASH AND SO2 FROM 3.35 MM ACFM OF FLUE GAS VIA WET LIME SCRUBBING. THE INITIAL SHAKEDOWN AND DEBUGGING PHASE OF OPERATION BEGAN FOR PART OF THE SYSTEM IN DECEMBER 1975. FULL COMMERCIAL OPERATION COMMENCED IN APRIL 1976. TO DATE, ALL 6 OF THE SCRUBBING TRAINS HAVE BEEN SUCCESSFULLY PUT INTO OPERATION. THE AVAILABILITY INDEX VALUE FOR THE ENTIRE SCRUBBING SYSTEM HAS BEEN IN THE MID 90 PERCENT RANGE SINCE COMMERCIAL START-UP.

BACKGROUND INFORMATION

ON

BRUCE MANSFIELD UNIT NO. 1

THE BRUCE MANSFIELD PLANT IS A 2700-MW, THREE-UNIT, COAL-FIRED FACILITY LOCATED ON THE OHIO RIVER IN THE BOROUGH OF SHIPPING PORT, PENNSYLVANIA. THIS NEW FACILITY IS BEING BUILT BY PENNSYLVANIA POWER CO., WHICH IS ACTING ON ITS OWN BEHALF AND AS AGENT FOR THE OTHER PARTICIPATING COMPANIES* THE CLEVELAND ELECTRIC ILLUMINATING CO., DUQUESNE LIGHT CO., OHIO EDISON CO., AND TOLEDO EDISON CO.

BRUCE MANSFIELD NO. 1 IS A COAL-FIRED, ONCE-THROUGH, SUPERCRITICAL STEAM GENERATOR WHICH FIRES 333 TONS/HR OF COAL GENERATING APPROXIMATELY 6.5 MM LB/HR OF STEAM AT 3,785 PSIG, 1005 F/1005 F. THE EMISSION CONTROL EQUIPMENT REQUIRED FOR THIS UNIT IS DESIGNED TO MEET STATE EMISSION REGULATIONS OF 0.6 LBS SULFUR DIOXIDE/MM BTU OF HEAT INPUT AND 0.0175 GR/SCF OF PARTICULATE WHEN BURNING 11,900 BTU/LB COAL HAVING AVERAGE ASH AND SULFUR CONTENTS OF 12.5 AND 4.7 PERCENT, RESPECTIVELY.

IN LATE 1970, AN INTENSIVE INVESTIGATION OF MORE THAN 30 POTENTIAL DESULFURIZATION SYSTEMS WAS INITIATED. THE SYSTEM ULTIMATELY CHOSEN FOR THE REMOVAL OF FLY ASH AND SULFUR DIOXIDE WAS THE VENTURI WET-SCRUBBING SYSTEM, MANUFACTURED BY CHEMICO AIR POLLUTION CONTROL CO., UTILIZING THE DRAVO CORPORATION'S THIOSORBIC LIME AS THE SCRUBBING-ABSORBENT.

THE DESIGN FEATURES OF THE SCRUBBING SYSTEM DICTATES EACH SCRUBBING TRAIN CONSIST OF A SCRUBBING VESSEL (VARIABLE-THROAT VENTURI), A 9000-HP I.D. FAN, AND AN ABSORBER VESSEL (FIXED-THROAT VENTURI). THERE ARE SIX SCRUBBER TRAINS PER UNIT, FIVE OF WHICH ARE REQUIRED TO HANDLE THE FLUE GAS FLOW FROM THE BOILER AT FULL LOAD (3.35 MM ACFM AT 285 F). THE SCRUBBER/ABSORBER TRAINS ARE ARRANGED IN TWO GROUPS OF THREE. THE TREATED FLUE GAS, WHICH HAS PASSED THROUGH THE SCRUBBING SYSTEM, IS DUCTED THROUGH A COMMON REHEAT CHAMBER AND THEN EXHAUSTED UP THE 950-FT. STACK.

THE ADJUSTABLE VENTURI THROAT SCRUBBING MODULE REMOVES NEARLY ALL OF THE FLY ASH CONTAINED IN THE FLUE GAS. THE ABSORBER MODULE, WHICH IS A FIXED-THROAT VENTURI, REMOVES THE REMAINING FLY ASH. SULFUR DIOXIDE IS ABSORBED IN BOTH THE SCRUBBER AND ABSORBER BY DROPLETS OF LIME SLURRY, CONTAINING 2 TO 6 PERCENT MAGNESIUM OXIDE.

THE SCRUBBER-RECYCLE BLEED IS COMBINED WITH A FLY ASH SLURRY FROM THE BOILER AND DISCHARGED TO A 200-FOOT-DIAMETER THICKENER. SLUDGE FROM THE THICKENER IS THEN PUMPED TO A WASTE DISPOSAL SYSTEM WHERE IT IS MIXED WITH A STABILIZING AGENT (CALCILOX) AND THEN PUMPED APPROXIMATELY 7 MILES TO THE LITTLE BLUE RUN RAVINE FOR LAND FILL.

A SIMPLIFIED PROCESS FLOW DIAGRAM IS PRESENTED IN FIGURE 17 OF APPENDIX C.

BRUCE MANSFIELD NO. 1

MONTH	BOILER	OPERATING HOURS FGD MODULES A	B	C	D	E	F	COMMENTS
DEC. 75								INITIAL OPERATION (SHAKEDOWN AND DEBUGGING) FOR PART OF THE SYSTEM COMMENCED IN DECEMBER 1975.
JAN. 76								
FEB. 76								
MAR. 76								
APR. 76	506	0	210	984	2147	2808	2427	THE INSTALLATION BEGAN FULL COMMERCIAL OPERATION IN APRIL. THE SCRUBBING SYSTEM IS CURRENTLY HANDLING FLUE GAS AT A TOTAL EQUIVALENT CAPACITY OF 840 TO 850-MW (GROSS). THE TOTAL MODULE BY MODULE OPERATION HOURS LOGGED TO-DATE ARE POSTED IN THE ACCOMPANYING TABLE.
MAY 76	595	209	815	1576	2659	3430	2920	THE LAST SCRUBBING TRAIN WAS PLACED IN SERVICE DURING THE MONTH. SERVICE TIME TOTALS FOR ALL 6 SCRUBBER-ABSORBER TRAINS THROUGH MAY ARE POSTED IN THE ACCOMPANYING TABLE ALONG WITH THE PERFORMANCE INDEX VALUES.
TOTAL SYSTEM AVAILABILITY = 80%								
TOTAL SYSTEM OPERABILITY = 100%								
TOTAL SYSTEM RELIABILITY = 100%								
TOTAL SYSTEM UTILIZATION = 80%								
JUN.76	720	714	680	701	674	705	573	THE VALUES IN THE ACCOMPANYING TABLE ARE THE BOILER HOURS AND THE MODULAR OPERATING HOURS.
TOTAL SYSTEM AVAILABILITY = 100%								
TOTAL SYSTEM OPERABILITY = 100%								
TOTAL SYSTEM RELIABILITY = 100%								
TOTAL SYSTEM UTILIZATION = 100%								
JUL. 76	672.8	537	590	606	637	662	661	
TOTAL SYSTEM AVAILABILITY = 90%								
TOTAL SYSTEM OPERABILITY = 100%								
TOTAL SYSTEM RELIABILITY = 100%								
TOTAL SYSTEM UTILIZATION = 90%								

MONTH	BOILER	OPERATING HOURS FGD MODULES A	B	C	D	E	F	COMMENTS
AUG. 76	705.3	672	620	653	535	500	668	
TOTAL SYSTEM AVAILABILITY = 95%								
TOTAL SYSTEM OPERABILITY = 100%								
TOTAL SYSTEM RELIABILITY = 100%								
TOTAL SYSTEM UTILIZATION = 95%								
SEP. 76	720	708	617	693	695	596	464	
TOTAL SYSTEM AVAILABILITY = 100%								
TOTAL SYSTEM OPERABILITY = 100%								
TOTAL SYSTEM RELIABILITY = 100%								
TOTAL SYSTEM UTILIZATION = 100%								
OCT. 76	739	710	549	631	619	691	691	
TOTAL SYSTEM AVAILABILITY = 99%								
TOTAL SYSTEM OPERABILITY = 100%								
TOTAL SYSTEM RELIABILITY = 100%								
TOTAL SYSTEM UTILIZATION = 99%								
NOV.76	277	270	278	282	113	159	246	
TOTAL SYSTEM AVAILABILITY = 100%								
TOTAL SYSTEM OPERABILITY = 100 %								
TOTAL SYSTEM RELIABILITY = 100 %								
TOTAL SYSTEM UTILIZATION = 38%								
DEC. 76	722	584	726	684	433	622	626	
TOTAL SYSTEM AVAILABILITY = 100 %								
TOTAL SYSTEM OPERABILITY = 100 %								
TOTAL SYSTEM RELIABILITY = 100 %								
TOTAL SYSTEM UTILIZATION =97%								

TABLE 3
PERFORMANCE DESCRIPTION FOR OPERATIONAL FGD SYSTEMS 12/76

IDENTIFICATION NO.	88
UTILITY NAME	PHILADELPHIA ELECTRIC CO.
UNIT NAME	EDDYSTONE NO 1A
UNIT LOCATION	EDDYSTONE PENNSYLVANIA
UNIT RATING	120 MW
FUEL CHARACTERISTICS	COAL 2.5 PERCENT SULFUR
FGD VENDOR	UNITED ENGINEERS / PECO
PROCESS	MAGNESIUM OXIDE SCRUBBING
NEW OR RETROFIT	RETROFIT
START UP DATE	9/75
FGD STATUS	OPERATIONAL
EFFICIENCY, PARTICULATES	99.9 PERCENT
SO2	90 PERCENT
WATER MAKE UP	CLOSED LOOP 1.1 GPM/MW
SLUDGE DISPOSAL	
UNIT COST	$17 MILLION CAPITAL
OPERATIONAL EXPERIENCE	REFER TO THE BACKGROUND INFORMATION SECTION IN TABLE 3 OF THIS REPORT. THE SO2 SCRUBBING OPERATIONS HAVE BEEN TEMPORARILY DISCONTINUED AT THIS STATION BECAUSE THE REGENERATION FACILITY AT THE OLIN CHEMICAL SULFURIC ACID PLANT HAS PERMANENTLY CEASED OPERATIONS. THE UTILITY IS NOW RELOCATING THE REGENERATION FACILITY TO THE ESSEX CHEMICAL PLANT LOCATED IN NEWARK, NEW JERSEY. RESUMPTION OF SO2 SCRUBBING OPERATIONS IS NOW SCHEDULED FOR MAY OF 1977. TO DATE, THE MAGNESIUM OXIDE SCRUBBING UNIT HAS BEEN IN SERVICE FOR ONLY A SHORT PERIOD OF TIME DURING LATE 1975.

BACKGROUND INFORMATION

ON

EDDYSTONE NO. 1

THE EDDYSTONE STATION OF THE PHILADELPHIA ELECTRIC COMPANY (PECO) IS LOCATED ON THE DELAWARE RIVER IN EDDYSTONE, PENNSYLVANIA, ABOUT 11 MILES SOUTHWEST OF THE CENTER OF PHILADELPHIA. THE PLANT IS APPROXIMATELY FIVE MILES WEST OF ONE OF THE MAIN RUNWAYS OF THE PHILADELPHIA INTERNATIONAL AIRPORT.

THE STATION HAS FOUR GENERATORS WITH A TOTAL NET GENERATING CAPACITY OF 1370 MW. UNITS 1 AND 2 BURN COAL WITH AN AVERAGE GROSS HEATING VALUE OF 12,100 BTU/LB AND ASH AND SULFUR CONTENTS OF 12 PERCENT AND 2.3 PERCENT, RESPECTIVELY. STEAM CONDITIONS ARE 5,000 PSI AND 1150 F. THESE ARE THE HIGHEST UTILITY PLANT OPERATING PRESSURE AND TEMPERATURE CONDITIONS IN THE UNITED STATES. UNITS 1 AND 2 ARE BASE-LOAD UNITS. UNITS 3 AND 4 ARE PEAK-LOAD GENERATORS WHICH BURN NO. 6 OIL.

THERE ARE TWO FURNACES ON THE UNIT 1 BOILER. EACH FURNACE WAS INSTALLED WITH PARTICULATE CONTROLS CONSISTING OF MECHANICAL COLLECTORS AND AN ELECTROSTATIC PRECIPITATOR.

THE MAGNESIUM OXIDE-BASED FLUE GAS DESULFURIZATION (FGD) SYSTEM ON BOILER NO. 1 AT THE EDDYSTONE STATION OF PHILADELPHIA ELECTRIC COMPANY (PECO) WAS DESIGNED AND INSTALLED BY UNITED ENGINEERS AND CONSTRUCTORS, INC., IN COOPERATION WITH PHILADELPHIA ELECTRIC. THE SYSTEM CONSISTS OF THREE FIRST-STAGE SCRUBBER MODULES IN PARALLEL FOR PARTICULATE CONTROL (TWO ENVIRONEERING VENTRI ROD UNITS AND ONE PEABODY-LURGI VENTURI UNIT) AND A SECOND-STAGE ENVIRONEERING ABSORBER MODULE WITH TWO VENTRI-ROD BEDS FOR SULFUR DIOXIDE REMOVAL.

THE THREE FIRST-STAGE SCRUBBERS TOGETHER ARE SIZED TO HANDLE ALL THE EXHAUST GAS FROM UNIT 1 WHICH HAS A NET ELECTRIC GENERATING CAPACITY OF 316 MW. THE SECOND-STAGE ABSORBER IS SIZED TO HANDLE ONE-THIRD OF THE GAS FLOW, EQUIVALENT TO APPROXIMATELY 105 MW (NET). THE SYSTEM IS DESIGNED TO REMOVE 90 PERCENT OF THE SULFUR DIOXIDE FROM BOILER STACK GAS. A GENERAL PROCESS FLOW DIAGRAM OF THE WET SCRUBBING SYSTEM IS PRESENTED IN FIGURE 18 OF APPENDIX C.

SCRUBBER OPERATING HISTORY

THERE WAS A BRIEF OPERATING PERIOD ON THE PARTICULATE SCRUBBERS FROM MID-NOVEMBER, 1974, TO MARCH, 1975, THAT UNCOVERED A NUMBER OF PROBLEM AREAS. DUE TO A NUMBER OF EXTENUATING CIRCUMSTANCES, PARTICULATE SCRUBBING WAS NOT RESTARTED UNTIL JULY 23, 1975, WITH ONE PARTICULATE SCRUBBING TRAIN FOLLOWED BY THE OTHER TWO TRAINS, ON AUGUST 15 AND OCTOBER 2, RESPECTIVELY. THE SULFUR DIOXIDE ABSORBER WAS STARTED FOR THE FIRST TIME ON OCTOBER 2, 1975, AND THE MAGNESIUM OXIDE REGENERATION FACILITY FIRST PROCESSED MAGNESIUM SULFITE FROM THE EDDYSTONE SCRUBBER ON OCTOBER 28, 1975.

EDDYSTONE (CONTINUED)

THE MAGNESIUM OXIDE REGENERATION FACILITY HAS BEEN OPERATED TO PROCESS ALL MAGNESIUM SULFITE MATERIAL SENT TO IT FROM EDDYSTONE. THIS OPERATION WAS USUALLY ON A BATCH BASIS DUE TO THE UPS AND DOWNS AT THE EDDYSTONE SCRUBBER.

THE SULFUR DIOXIDE SCRUBBING SYSTEM WAS TEMPORARILY SHUT DOWN DECEMBER 31, 1975, BECAUSE THE ACID PLANT REGENERATION FACILITY AT THE OLIN CHEMICAL SULFURIC ACID PLANT IN PAULSBORO, NEW JERSEY PERMANENTLY CEASED OPERATIONS. THE UTILITY IS NOW IN THE PROCESS OF RELOCATING THE REGENERATION FACILITY TO THE ESSEX CHEMICAL PLANT LOCATED IN NEWARK, NEW JERSEY. THE RELOCATION OF THIS FACILITY WILL PROBABLY PROLONG THE SULFUR DIOXIDE DEVELOPMENTAL SCHEDULE BY APPROXIMATELY ONE YEAR. THE WET PARTICULATE SCRUBBERS ARE CONTINUING TO OPERATE AT THE EDDYSTONE PLANT.

THE PARTICULATE AND SULFUR DIOXIDE REMOVAL SYSTEM INSTALLED ON THE EDDYSTONE NO. 1 UNIT IS THE FIRST PHASE OF A TWO-PHASE PROJECT. FOLLOWING SUCCESSFUL DEVELOPMENT OF THIS SYSTEM WITH MORE CONTINUOUS OPERATION, IT WILL BE INCORPORATED INTO THE DESIGN FOR THE COMPLETE SULFUR DIOXIDE REMOVAL ON EDDYSTONE NO. 2 AND ONE OF THE TWO EXISTING UNITS AT THE CROMBY STATION.

ADDITIONAL INFORMATION AND DATA CONCERNING THE OPERATION OF THE PARTICULATE AND SULFUR DIOXIDE SCRUBBERS INSTALLED AT THIS PLANT ARE PROVIDED IN THE PERFORMANCE TABLE.

FGD SYSTEM PERFORMANCE

EDDYSTONE NO. 1

COMMENTS

NOV. 74 THE SCRUBBING SYSTEM AT THIS PLANT CONSISTS OF THREE PARALLEL SCRUBBING TRAINS INCORPORATING 3 WET PARTICULATE SCRUBBERS
DEC. 74 AND ONE SO2 ABSORBER MODULE. THERE WAS A BRIEF OPERATING PERIOD ON THE PARTICULATE SCRUBBERS FROM MID-NOVEMBER 1974 TO
JAN. 75 MARCH 1975. PROBLEMS ENCOUNTERED CENTERED AROUND THE SCRUBBER BOOSTER FANS AND THE FLUE GAS AND LIQUID CONDITIONS.
FEB. 75 THE B-SIDE BOOSTER FAN DEVELOPED HIGH SHAFT VIBRATION WHEN STARTED FOR THE FIRST TIME. THIS PROBLEM WAS DESIGN-RELATED,
MAR. 75 INVOLVING AN EXCESSIVE CLEARANCE AREA BETWEEN THE SHAFT AND THE WHEEL HUB. ALSO, EXTENSIVE CORROSION DEVELOPED IN THE
APR. 75 C-SIDE PARTICULATE SCRUBBER INTERNALS. THIS WAS CAUSED BY LOW SCRUBBING SOLUTION PH LEVELS AND CHLORIDE LEVELS AS HIGH
MAY 75 AS 2000 PPM. THESE CONDITIONS COUPLED WITH THE THERMAL SHOCK OF A HOT START PROCEDURE CAUSED THE CORROSION. THIS
JUN. 75 PROBLEM WAS AMELIORATED BY CAUSTIC ADDITION, HIGHER BLOWDOWN AND EMPLOYING A COLD START PROCEDURE. AT APPROXIMATELY
THIS TIME, A CHECKOUT OF SO2 SYSTEM WAS CONDUCTED. BLISTERING AND PEELING OF THE POLYURETHANE COATINGS WERE DETECTED
AND CORRECTED BY RECOATING WITH FLAKE GLASS.
JUL. 75 THE C-SIDE PARTICULATE SCRUBBER RESTARTED ON JULY 23, 1975. THE TWO REMAINING TRAINS, B-SIDE AND A-SIDE, WERE PUT INTO
AUG. 75 OPERATION ON AUGUST 15 AND OCTOBER 2, RESPECTIVELY. THE SO2 ABSORBER MODULE IN THE C-SIDE SCRUBBING TRAIN WAS INITIALLY
SEP. 75 PLACED IN SERVICE OCTOBER 2, 1975. THE OLIN CHEMICAL MGO REGENERATION FACILITY FIRST PROCESSED MAGNESIUM SULFITE FROM
OCT. 75 THE EDDYSTONE SCRUBBER ON OCTOBER 28, 1975. THE C-SIDE PARTICULATE SCRUBBER OPERATED A TOTAL OF 2831 HOURS THROUGH
NOV. 75 JANUARY 31, 1976, FOR AN AVAILABILITY OF 70 PERCENT. THHE B-SIDE TRAIN HAS OPERATED A TOTAL OF 1933 HOURS THROUGH
DEC. 75 JANUARY 31, 1976 FOR AN AVAILABILITY OF 55 PERCENT. THE A-SIDE TRAIN OPERATED A TOTAL OF 626 HOURS THROUGH JANUARY 31,
JAN. 76 1976, FOR AN AVAILABILITY OF 24 PERCENT. THE C-SIDE SO2 ABSORBER WAS IN SERVICE A TOTAL OF 556 HOURS THROUGH DECEMBER
31, 1975, WITH AN AVAILABILITY OF 33 PERCENT SINCE STARTUP. PROBLEMS ENCOUNTERED IN THE OPERATION OF THE THREE SCRUBBING
TRAINS INCLUDED* UNDER-DESIGNED RECIRCULATION PUMPS, MALFUNCTION OF THE FLUE GAS BY-PASS DAMPER DRIVE UNITS AND
FAILURE OF THE DOUBLE-BRICK REFRACTORY LINING IN THE REHEAT COMBUSTION CHAMBER.
FEB. 76 OPERATION OF THE SO2 SCRUBBING SYSTEM AT EDDYSTONE WAS TEMPORARILY HALTED BECAUSE THE ACID PLANT REGENERATION FACILITY
MAR. 76 AT THE OLIN CHEMICAL SULFURIC ACID PLANT IN PAULSBORO, NEW JERSEY PERMANENTLY CEASED OPERATIONS. THE UTILITY IS NOW
APR. 76 INVESTIGATING ALTERNATIVE REGENERATION SITES. A MINIMUM PERIOD OF SIX MONTHS WILL BE REQUIRED FOR RELOCATION ONCE A

EDDYSTONE NO. 1

COMMENTS

MAY 76 CHOICE IS MADE. THE UTILITY ANNOUNCED PLANS FOR RELOCATION OF THE REGENERATION FACILITY AT THE ESSEX CHEMICAL PLANT IN NEWARK, NEW JERSEY.

JUN. 76 RESUMPTION OF SO_2 SCRUBBING OPERATIONS IS PRESENTLY SCHEDULED FOR DECEMBER 1976. THE RELOCATION OF THE REGENERATION

JUL. 76 FACILITY IS NOW IN PROGRESS. THE PARTICULATE SCRUBBERS ARE OPERATIONAL. THE C-SIDE BOOSTER FAN HAS DEVELOPED A

AUG. 76 MATERIALS FAILURE BETWEEN THE HUB AND SHAFT (IDENTICAL TO THE B-SIDE UNIT MENTIONED ABOVE).

SEP. 76 ALL THREE BOOSTER FANS HAVE NOW DEVELOPED THE MATERIALS FAILURE BETWEEN THE HUB AND SHAFT (AS IDENTIFIED IN THE ABOVE

OCT. 76 FOR THE B-SIDE UNIT). THESE UNITS HAVE BEEN RETURNED TO THE MANUFACTURER FOR MODIFICATIONS AND REPAIRS. CURRENTLY, ONE OF THE PARTICULATE SCRUBBERS IS IN THE FLUE GAS STREAM. TO DATE, ALL THREE OF THE WET PARTICULATE SCRUBBERS HAVE NOT SEEN ANY APPRECIABLE SIMULTANEOUS SERVICE TIME.

NOV. 76 MGO SCRUBBING OPERATIONS ARE NOW SCHEDULED TO RESTART IN MAY 1977. REGENERATION FACILITY RELOCATION IS BEING COM-

DEC. 76 PLETED, AND MODIFICATIONS TO THE ID BOOSTER FANS CURRENTLY BEING EFFECTED CONSIST OF CONVERSION FROM A SHRINK FIT TO A SLIP FIT. THESE MODIFICATIONS ARE EXPECTED TO ELIMINATE RECURRING VIBRATION PROBLEMS.

TABLE 3
PERFORMANCE DESCRIPTION FOR OPERATIONAL FGD SYSTEMS 12/76

IDENTIFICATION NO.	93
UTILITY NAME	PUBLIC SERVICE CO OF COLORADO
UNIT NAME	VALMONT NO. 5
UNIT LOCATION	VALMONT COLORADO
UNIT RATING	50 MW
FUEL CHARACTERISTICS	COAL 0.72 PERCENT SULFUR
FGD VENDOR	UOP / PUB SERVICE OF COLORADO
PROCESS	LIMESTONE SCRUBBING
NEW OR RETROFIT	RETROFIT
START UP DATE	10/74
FGD STATUS	OPERATIONAL
EFFICIENCY, PARTICULATES	95 PERCENT
SO2	85 PERCENT
WATER MAKE UP	CLOSED LOOP
SLUDGE DISPOSAL	UNSTABILIZED SLUDGE DISPOSED IN LINED POND
UNIT COST	
OPERATIONAL EXPERIENCE	REFER TO BACKGROUND INFORMATION SECTION IN TABLE 3 OF THIS REPORT. THIS SYSTEM HAS BEEN OPERATIONAL SINCE NOVEMBER 1974. THE FGD SYSTEM CURRENTLY OPERATIONAL AT THIS STATION IS AN EXPERIMENTAL UNIT, ORIGINALLY DESIGNED BY UNIVERSAL OIL PRODUCTS FOR PARTICULATE REMOVAL ONLY. ONE OF THE TWO PARALLEL SCRUBBING MODULES WAS CONVERTED TO LIMESTONE SCRUBBING FOR EXPERIMENTAL PURPOSES ONLY.

BACKGROUND INFORMATION

ON

VALMONT NO. 5

THE VALMONT POWER STATION OF THE PUBLIC SERVICE COMPANY OF COLORADO IS LOCATED IN VALMONT, COLORADO, APPROXIMATELY 20 MILES NORTH OF DENVER. VALMONT NO. 5 IS A COAL-FIRED UNIT BURNS THAT FIRES GAS A FEW MONTHS DURING THE YEAR. THE COAL GENERALLY EMPLOYED FOR THIS UNIT IS WYOMING ROSEBUD, WHICH HAS AN AVERAGE GROSS HEATING VALUE OF 10,780 BUT/LB WITH ASH CONTENT IN THE 6 TO 7 PERCENT RANGE AND SULFUR CONTENT LESS THAN 1 PERCENT.

THE FGD SYSTEM BEING TESTED AT THIS STATION IS AN EXPERIMENTAL UNIT ORIGINALLY DESIGNED BY UNIVERSAL OIL PRODUCTS FOR PARTICULATE REMOVAL ONLY. THIS TCA UNIT CONSISTS OF TWO PARALLEL MODULES WITH A COMBINED CAPABILITY OF TREATING APPROXIMATELY 50 PERCENT OF THE TOTAL FLUE GAS LOAD OR THE EQUIVALENT OF APPROXIMATELY 100 MW GENERATING CAPACITY (50 MW PER MODULE). THIS SYSTEM WAS COMPLETED AND OPERATIONAL IN 1971 AND RAN UNTIL OCTOBER 1974. PARTICULATE REMOVAL EFFICIENCY WAS MEASURED AT 95 PERCENT, SULFUR DIOXIDE REMOVAL EFFICIENCY WAS 45 PERCENT, AND AVAILABILITY WAS APPROXIMATELY 70 PERCENT. FREQUENT SCRUBBER OUTAGES WERE CAUSED PRIMARILY BY SUPERSATURATED CALCIUM SULFATE IN THE SCRUBBING LIQUOR. TO MINIMIZE CLEANOUTS AND RECTIFY SCALING PROBLEMS, A PH CONTROL PROGRAM WAS IMPLEMENTED FOR ONE OF THE SCRUBBING MODULES WITH ADDITION OF LIMESTONE TO THE SCRUBBING LIQUOR. THIS MODIFICATION WAS EXPECTED TO MINIMIZE SCALING, DECREASE SCRUBBER OUTAGES FOR CLEANOUTS, AND INCREASE AVAILABILITY. THE EXPECTED RESULTS DID NOT MATERIALIZE. SCALE BUILDUP CONTINUED AND AVAILABILITY DECREASED. TESTS DURING THE PH CONTROL PROGRAM SHOWED PARTICULATE REMOVAL EFFICIENCY AT 95 PERCENT. SULFUR DIOXIDE REMOVAL EFFICIENCY INCREASED TO 85 PERCENT, AND AVAILABILITY DROPPED TO 70 PERCENT. THE UNSTABILIZED SLUDGE GENERATED DURING THIS OPERATION WAS PUMPED TO A LINED POND. THE OPERATIONAL DATA GENERATED FROM THE LIMESTONE MODIFICATION PROGRAM ARE PRELIMINARY, BASED UPON A 4.5 MONTH TESTING PROGRAM.

VALMONT NO. 5

MONTH	OPERATING HOURS BOILER	OPERATING HOURS FGD SYSTEM	FGD SYSTEM OPERABILITY (%)	COMMENTS
SEP. 75				THIS FACILITY HAS BEEN INACTIVE SINCE SEPTEMBER 1, 1975, BECAUSE OF A
OCT. 75				TURBINE GENERATOR FAILURE. THE UNIT IS SCHEDULED TO GO ON LINE AGAIN
NOV. 75				IN DECEMBER 1975. THIS UNIT IS STILL INACTIVE BECAUSE OF A BOILER
DEC. 75				OVERHAUL. THE SCRUBBER/ABSORBER TRAIN IS AVAILABLE AND WILL BE COUPLED INTO THE SYSTEM WHEN THE BOILER GOES BACK ON-LINE.
JAN. 76				THE BOILER OVERHAUL HAS BEEN COMPLETED. THE UNIT IS AVAILABLE IN THE
FEB. 76				PARTICULATE REMOVAL MODE ONLY. THE UTILITY IS SUSPENDING RESUMPTION OF THE LIMESTONE MODIFICATION OPERATION FOR AN INDEFINITE PERIOD.
MAR. 76				THE EXPERIMENTAL LIMESTONE SCRUBBING PROGRAM WAS INACTIVE DURING THE
APR. 76				REPORT PERIOD. RESUMPTION OF THE PROGRAM IS CONSIDERED INDEFINITE AT
MAY 76				THE PRESENT TIME.THE EXPERIMENTAL LIMESTONE SCRUBBING PROGRAM REMAINED
JUN. 76				INACTIVE DURING THE REPORT PERIOD. PRESENT PLANS CALL FOR THE RESUMP-
JUL. 76				TION OF THIS PROGRAM SOMETIME IN THE FALL OF 1976. THE TCA UNIT IS
AUG. 76				NOW OPERATIONAL IN THE PARTICULATE REMOVAL MODE. THE NO. 5 UNIT FIRES A COMBINATION OF COAL AND NATURAL GAS MEETING CURRENT STATE AIR EMISSION STANDARDS.
SEP. 76				NO CHANGE IN STATUS. THE RESUMPTION OF THE EXPERIMENTAL LIMESTONE
OCT. 76				ADDITIONAL AND SO2 REMOVAL PROGRAM IS STILL INDEFINITE. THE TCA MODULES ARE CONTINUING TO OPERATE IN THE PARTICULATE REMOVAL MODE. CARRYOVER INTO THE RECIRCULATION SYSTEM IS STILL A PROBLEM AREA. THE LOW PH SCRUBBER ENVIRONMENT HAS CAUSED A MATERIALS PROBLEM, NECESSITATING REPLACEMENT OF 304 SS PARTS WITH 316 SS.
NOV. 76				THE UTILITY HAD NO CHANGE IN STATUS TO ANNOUNCE FOR THE
DEC. 76				CURRENT REPORT PERIOD.

TABLE 3
PERFORMANCE DESCRIPTION FOR OPERATIONAL FGD SYSTEMS 12/76

IDENTIFICATION NO.	100
UTILITY NAME	RICKENBACKER AFB
UNIT NAME	RICKENBACKER
UNIT LOCATION	COLUMBUS OHIO
UNIT RATING	20 MW
FUEL CHARACTERISTICS	COAL 3.6 PERCENT SULFUR
FGD VENDOR	RESEARCH COTTRELL
PROCESS	LIME SCRUBBING
NEW OR RETROFIT	RETROFIT
START UP DATE	3/76
FGD STATUS	OPERATIONAL
EFFICIENCY, PARTICULATES	99 PERCENT
SO2	90 PERCENT
WATER MAKE UP	OPEN LOOP 2.50 GPM/MW MAY
SLUDGE DISPOSAL	UNSTABILIZED SLUDGE DISPOSED IN LINED POND
UNIT COST	$110/KW CAPITAL
OPERATIONAL EXPERIENCE	REFER TO THE BACKGROUND INFORMATION SECTION IN TABLE 3 OF THIS REPORT. THE SCRUBBING SYSTEM WAS FIRST PLACED IN SERVICE MARCH 11, 1976. THE SYSTEM SUPPLIER REPORTED THAT THE SYSTEM REMAINED OUT OF SERVICE THROUGHOUT THE MONTH OF NOVEMBER FOR COMPLETION OF REPAIRS TO THE SCRUBBER FAN THRUST BEARING. THE SCRUBBER WAS PUT BACK IN THE GAS STREAM AND REMAINED IN SERVICE THROUGHOUT THE MONTH. A NEW STOKER BOILER, WHICH WILL REPLACE TWO OF THE OLDER UNITS, IS NOW BEING INSTALLED AT THIS FACILITY.

BACKGROUND INFORMATION

ON

RICKENBACKER AIR FORCE BASE

IN 1971 RESEARCH-COTTRELL CONCLUDED AN AGREEMENT WITH A.B. BAHCO VENTILATION, ENKOPING, SWEDEN. THIS CONTRACTUAL ARRANGEMENT ALLOWS RESEARCH-COTTRELL TO BE THE EXCLUSIVE LICENSEE OF THE BAHCO SULFUR DIOXIDE SCRUBBING PROCESS IN THE UNITED STATES. TO DATE, THERE ARE 19 SULFUR DIOXIDE BAHCO SCRUBBING SYSTEMS IN THE VARIOUS STAGES OF DEVELOPMENT THROUGHOUT THE WORLD. THE FIRST U.S. BAHCO INSTALLATION HANDLES SEVEN STOKER-TYPE COAL-FIRED BOILERS AT THE RICKENBACKER AIR FORCE BASE IN COLUMBUS, OHIO. THE BOILERS ARE OLDER UNITS. THREE WERE FIRST PLACED IN SERVICE IN 1952 AND THE REMAINING 4 CAME ON LINE IN 1954. THE UNITS FIRE A HIGH SULFUR COAL, 3.6 PERCENT SULFUR, AT HIGH COMBUSTION AIR RATES, 150 TO 160 PERCENT EXCESS AIR.

THE RICKENBACKER EMISSION CONTROL SYSTEM CONSISTS ESSENTIALLY OF A MECHANICAL COLLECTOR, BAHCO SCRUBBER TOWER, LIME STORAGE AND HANDLING SYSTEM, CLARIFIER, BOOSTER FAN AND ASSOCIATED DUCTWORK, PUMPS, CONTROLS, AND A SLUDGE DISPOSAL POND.

SOLID PARTICULATE AND SULFUR DIOXIDE-LADEN FLUE GAS TAKEN FROM EACH OF THE EXISTING SEVEN STACKS IS FED THROUGH A COMMON HEADER AND INTO A MECHANICAL COLLECTOR WHERE PRIMARY PARTICULATE REMOVAL TAKES PLACE. THE MECHANICAL COLLECTOR HAS A DESIGN REMOVAL EFFICIENCY OF 70 PERCENT AND WAS INSTALLED PRIMARILY TO REDUCE FAN WEAR. THE PARTLY CLEANED GAS THEN FLOWS TO THE FAN AND INTO THE BAHCO TOWER WHERE ADDITIONAL PARTICULATE AND PRIMARY SULFUR DIOXIDE REMOVAL TAKES PLACE.

THE BAHCO SCRUBBING VESSEL IS A VERTICAL TOWER CONSISTING OF TWO SCRUBBING STAGES. GAS FLOWS THROUGH THE TOWER WHERE IS IS CONTACTED WITH A LIME SLURRY SOLUTION. AFTER PASSING THROUGH THE FIRST SCRUBBING STAGE, ENTRAINED MOISTURE IS REMOVED BY A CYCLONIC TYPE MIST ELIMINATOR. THE GAS THEN PASSES THROUGH A SECOND SCRUBBING STAGE AND A SECOND CYCLONIC TYPE MIST ELIMINATOR. THE CLEANED GAS IS DISCHARGED TO THE ATMOSPHERE THROUGH A STACK MOUNTED DIRECTLY TO THE TOWER.

PEBBLE LIME IS EMPLOYED AS THE REAGENT IN THE SCRUBBING SYSTEM AND IS PREPARED BY SLAKING AND DISSOLUTION IN A MIX/HOLD TANK. THE SCRUBBING SLURRY IS THEN PUMPED TO THE ABSORBER WHERE IT IS CONTACTED WITH THE FLUE GAS IN A COUNTERCURRENT FASHION.

THE SPENT SCRUBBING SOLUTION IS DISCHARGED TO THE THICKENER WHERE THE WASTE SOLIDS SETTLE OUT. THICKENER OVERFLOW IS RETURNED TO THE MIX/HOLD TANK. THICKENER UNDERFLOW IS DISCHARGED TO A 5-ACRE HYPALON-LINED DISPOSAL POND. THIS POND IS LOCATED APPROXIMATELY 400 FEET FROM THE SCRUBBING TOWER. CLEAR WATER FROM THE POND IS RETURNED TO PROCESS AS SLAKING WATER. A SIMPLIFIED PROCESS FLOW DIAGRAM OF THE RESEARCH COTTRELL/BAHCO WET LIME SCRUBBING SYSTEM IS PRESENTED IN FIGURE 19 OF APPENDIX C.

OPERATING HISTORY

RICKENBACKER AFB (CONTINUED)

THE SYSTEM WAS INITIALLY PLACED IN SERVICE MARCH 11, 1976. INITIAL OPERATION PROCEEDED IN AN OPEN WATER LOOP MODE BECAUSE THE THICKENER WAS NOT YET COMPLETELY INSTALLED. SULFUR DIOXIDE INLET CONCENTRATIONS WERE IN THE 1800 TO 2000 PPM RANGE. HIGH OXYGEN CONCENTRATIONS ALSO EXIST IN THE FLUE GAS BECAUSE THESE OLDER, INEFFICIENT BOILERS OPERATE AT 150 TO 160 PERCENT EXCESS AIR RATES. SULFUR DIOXIDE REMOVAL EFFICIENCY HAS BEEN IN THE LOW 90 PERCENT PLUS RANGE. LIME UTILIZATION HAS BEEN VERY GOOD. PROBLEMS ENCOUNTERED TO DATE HAVE BEEN PRIMARILY OF A MECHANICAL NATURE USUALLY ASSOCIATED WITH STARTUP. THE MAJOR PROBLEMS ARE ITEMIZED BELOW.

ELECTRICAL CIRCUITS AND SYSTEM CONTROL PANEL.

PUMP MALFUNCTION - SPARE PARTS SHIPMENT DELAY.

SEDIMENTATION BUILDUP IN THE SCRUBBER VESSEL (THIS WAS DUE PRIMARILY TO OPERATION AT HIGHER THAN DESIGN SOLIDS CONCENTRATION IN THE SCRUBBING SOLUTION BECAUSE THE THICKENER WAS NOT YET IN SERVICE PLUS GRIT GETTING THROUGH THE LIME SLAKER GRIT REMOVAL STEP).

FAMILIARIZATION OF THE OPERATING STAFF WITH THE MECHANICS OF THE PROCESS.

I.D. BOOSTER FAN PROBLEMS. ADDITIONAL BRACING, AND EPOXY GROUTING WAS REQUIRED TO STOP THE ELEVATED FAN CONCRETE SUPPORT FROM VIBRATING WHILE THE FAN WAS OPERATING. A THRUST BEARING FAILURE IN THIS UNIT HAS ALSO BEEN ENCOUNTERED.

A NEW COAL-FIRED STOKER-TYPE BOILER (RILEY STOKER, 60 MM BTU/HR. HEAT CAPACITY), IS NOW BEING INSTALLED AT THIS FACILITY. THE INSTALLATION OF THIS NEW UNIT WILL RESULT IN THE TERMINATION OF OPERATIONS FOR THE NO. 1 AND 2 UNITS AND STANDBY SERVICE FOR THE NO. 3 UNIT. THESE ARE THE THREE OLDER UNITS (MANUFACTURED AND INSTALLED IN 1952) WHICH ARE OPERATING AT HIGH EXCESS AIR RATES AND CORRESPONDING LOW THERMAL EFFICIENCIES. THE OVERALL RESULT SHOULD BE A STABILIZATION OF FLUE GAS CONDITIONS, INCREASED SCRUBBER EFFICIENCY, AND REDUCTION OF CARBON FINES CARRYOVER STEMMING FROM THE INEFFICIENT COMBUSTION CONDITIONS IN THESE OLDER UNITS.

THE BAHCO FGD CONTROL SYSTEM DID NOT OPERATE DURING NOVEMBER BECAUSE OF COMPLETION OF REPAIRS TO THE I.D. FAN HOUSING. THE SYSTEM OPERATED DURING THE ENTIRE MONTH OF DECEMBER WITH SO2 REMOVAL EFFICIENCY VARYING FROM 85 TO 90 PERCENT. LIME FEED HAD TO PROCEED ON A MANUAL BASIS BECAUSE OF A MALFUNCTIONING SLAKER. THE NEW STOKER BOILER HAS NOT YET BEEN PLACED IN COMMERCIAL OPERATION, PRIMARILY BECAUSE OF PROBLEMS RELATED TO SEVERE WEATHER CONTITIONS.

TABLE 3
PERFORMANCE DESCRIPTION FOR OPERATIONAL FGD SYSTEMS 12/76

IDENTIFICATION NO.	112
UTILITY NAME	TENNESSEE VALLEY AUTHORITY
UNIT NAME	SHAWNEE NO.10A
UNIT LOCATION	PADUCAH KENTUCKY
UNIT RATING	10 MW
FUEL CHARACTERISTICS	COAL 2.9 PERCENT SULFUR
FGD VENDOR	UNIVERSAL OIL PRODUCTS
PROCESS	LIME/LIMESTONE SCRUBBING
NEW OR RETROFIT	RETROFIT
START UP DATE	4/72
FGD STATUS	OPERATIONAL
EFFICIENCY, PARTICULATES	
SO2	
WATER MAKE UP	
SLUDGE DISPOSAL	
UNIT COST	
OPERATIONAL EXPERIENCE	REFER TO BACKGROUND INFORMATION SECTION IN TABLE 3 OF THIS REPORT. THIS TURBULENT CONTACT ABSORBER(TCA) LIME/LIMESTONE SCRUBBING SYSTEM HAS BEEN OPERATIONAL SINCE APRIL 1972. THIS TEST PROGRAM IS FUNDED BY THE EPA. TVA IS THE CONSTRUCTOR AND FACILITY OPERATOR. THE BECHTEL CORP. OF SAN FRANCISCO IS THE MAJOR CONTRACTOR, TEST DIRECTOR, AND REPORT WRITER.

TABLE 3
PERFORMANCE DESCRIPTION FOR OPERATIONAL FGD SYSTEMS 12/76

IDENTIFICATION NO.	113
UTILITY NAME	TENNESSEE VALLEY AUTHORITY
UNIT NAME	SHAWNEE NO.10B
UNIT LOCATION	PADUCAH KENTUCKY
UNIT RATING	10 MW
FUEL CHARACTERISTICS	COAL 2.9 PERCENT SULFUR
FGD VENDOR	CHEMICO
PROCESS	LIME/LIMESTONE SCRUBBING
NEW OR RETROFIT	RETROFIT
START UP DATE	4/72
FGD STATUS	OPERATIONAL
EFFICIENCY, PARTICULATES	
SO2	
WATER MAKE UP	
SLUDGE DISPOSAL	
UNIT COST	
OPERATIONAL EXPERIENCE	REFER TO BACKGROUND INFORMATIION SECTION IN TABLE 3 OF THIS REPORT. THIS VENTURI/SPRAY TOWER LIME/LIMESTONE SCRUBBING SYSTEM HAS BEEN OPERATIONAL SINCE APRIL 1972. THIS TEST PROGRAM IS FUNDED BY THE EPA. TVA IS THE CONSTRUCTOR AND FACILITY OPERATOR. THE BECHTEL CORP. OF SAN FRANCISCO IS THE MAJOR CONTRACTOR,TEST DIRECTOR, AND REPORT WRITER.

BACKGROUND INFORMATION

ON

SHAWNEE NOS. 10A, 10B, AND 10C

IN JUNE 1968, THE EPA INITIATED A PROGRAM TO TEST PROTOTYPE LIME AND LIMESTONE SYSTEMS FOR REMOVAL OF SULFUR DIOXIDE AND PARTICULATES FROM COAL-FIRED BOILER FLUE GASES. THE PROGRAM WAS CARRIED OUT IN A TEST FACILITY INCORPORATED INTO THE FLUE GAS DUCTWORK OF UNIT NO. 10, A COAL-FIRED BOILER AT THE TVA SHAWNEE POWER STATION, PADUCAH, KENTUCKY. TVA IS THE CONSTRUCTOR AND FACILITY OPERATOR* BECHTEL CORP. IS THE MAJOR CONTRACTOR, TEST DIRECTOR, AND REPORT WRITER.

THE TEST FACILITY CONSISTS OF THREE PARALLEL SCRUBBER SYSTEMS OF PROTOTYPE SIZE, TREATING PART OF THE FLUE GAS FROM THE BOILER. EACH SCRUBBER TRAIN IS CAPABLE OF TREATING APPROXIMATELY 30,000 ACFM OR THE EQUIVALENT OF APPROXIMATELY 10 MW OF POWER PLANT GENERATING CAPACITY.

THREE PARALLEL WET SCRUBBER SYSTEMS WERE SELECTED FOR THE TEST PROJECT* 1) A VENTURI WITH A SPRAY TOWER AFTER ABSORBER* 2) A TURBULENT CONTACT ABSORBER (TCA) AND 3) A MARBLE-BED ABSORBER. THE VENTURI SYSTEM, MANUFACTURED BY CHEMICAL CONSTRUCTION CO., CONTAINS AN ADJUSTABLE THROAT THAT PERMITS CONTROL AND VARIATION OF PRESSURE DROP UNDER A WIDE RANGE OF FLOW CONDITIONS. THE TCA UNIT, MANUFACTURED BY UNIVERSAL OIL PRODUCTS, INCORPORATES A FLUIDIZED BED OF LOW DENSITY PLASTIC SPHERES THAT ARE FREE TO MOVE BETWEEN RETURNING GRIDS. THE MARBLE-BED ABSORBER, SUPPLIED BY COMBUSTION ENGINEERING CO., USES A PACKING OF 3/4-INCH GLASS MARBLE SPHERES AND A TURBULENT LAYER OF LIQUID AND GAS ABOVE THE MARBLE LAYER TO ENHANCE MASS TRANSFER.

IN JUNE 1974, THE EPA BEGAN A 3-YEAR ADVANCED TEST PROGRAM AT THE SHAWNEE FACILITY WITH THESE MAJOR GOALS* (1) CONTINUATION OF LONG-TERM TESTING, WITH EMPHASIS PLACED UPON THE RELIABLE OPERATION OF MIST ELIMINATION SYSTEMS AT INCREASED GAS VELOCITY, (2) INVESTIGATION OF ADVANCED PROCESS AND EQUIPMENT DESIGN VARIATIONS FOR IMPROVING SYSTEM RELIABILITY AND PROCESS ECONOMICS, AND (3) LONG-TERM RELIABILITY TESTING ON PROMISING PROCESS AND EQUIPMENT DESIGN VARIATIONS.

THE TWO PARALLEL SCRUBBING SYSTEMS OPERATING DURING THE ADVANCED PROGRAM ARE THE VENTURI/SPRAY TOWER SYSTEM AND THE TCA UNIT. GENERAL PROCESS FLOW DIAGRAMS OF THE TWO PROTOTYPE UNITS ARE PROVIDED IN FIGURES 20 AND 21 OF APPENDIX C. OPERATION OF THE MARBLE-BED ABSORBER UNIT HAS BEEN PERMANENTLY DISCONTINUED.

EACH OF THE SCRUBBING SYSTEMS CONTAINS ITS OWN SLURRY HANDLING FACILITIES AND CAN TREAT APPROXIMATELY 30,000 ACFM OF GAS AT 300 F CONTAINING 1800 TO 4000 PPM OF SULFUR DIOXIDE AND 2 TO 4 GRAINS/SCF OF PARTICULATES. BOILER NO. 1 NORMALLY BURNS A HIGH-SULFUR BITUMINOUS COAL.

SHAWNEE NOS. 10A, 10B, AND 10C (CONTINUED)

FROM JUNE 1974 TO JANUARY, 1976, MIST ELIMINATION AND LIMESTONE UTILIZATION TESTS WERE CONDUCTED AT THE SHAWNEE FACILITY. DURING THIS TEST PERIOD THE VENTURI/SPRAY TOWER SYSTEM WAS OPERATED ON BOTH LIME AND LIMESTONE AND THE TCA SYSTEM WITH LIMESTONE. TESTING WAS PERFORMED UNDER A CLOSED-WATER-LOOP OPERATION MODE. DURING THIS PERIOD THE SLURRY SOLIDS CONTAINED APPROXIMATELY 40 TO 50 PERCENT WEIGHT FLY ASH BECAUSE OF RELATIVELY HIGH GAS INLET PARTICULATE LOADING. THIS TESTING PROGRAM IS SCHEDULED TO RUN THROUGH TO JUNE 1977.

ADDITIONAL INFORMATION AND DATA CONCERNING THE DETAILS OF THE ADVANCED TEST PROGRAM ARE PRESENTED IN THE PERFORMANCE TABLE THAT FOLLOWS.

TEST RUN PERIOD	FGD SYSTEM OPERATING HOURS 10A	10B	COMMENTS
SEP. 75			THIS EXPERIMENTAL EPA-FUNDED OPERATION IS PROCEEDING WITH THE TEST PROGRAM. TWO
OCT. 75			ABSORBER MODULES ARE CURRENTLY OPERATIONAL (10 MW EACH)* THE MARBLE-BED ABSORBER IS STILL INOPERATIVE (SINCE JULY 1973). CURRENT EXPERIMENTS ARE RELATED TO MIST ELIMINATOR SECTION.
NOV. 75			RECENT TESTING AT SHAWNEE HAS SHOWN THAT THE CHEVRON MIST ELIMINATORS IN BOTH THE
DEC. 75			SPRAY TOWER AND THE TCA CAN BE KEPT FREE OF SOLIDS BUILDUP AT HIGH ALKALI UTILIZATION GREATER THAN 90 PERCENT, USING ONLY INTERMITTENT WASHING WITH AVAILABLE RAW WATER. THIS HIGH UTILIZATION IS NORMALLY ACHIEVED WITH LIME* IT HAS BEEN ACHIEVED WITH LIMESTONE AT REDUCED SCRUBBER INLET SLURRY PH (ABOUT 5.2) AND WITH THREE EFFLUENT TANKS IN SERIES TO SIMULATE A PLUG-FLOW REACTOR. TESTING IS CONTINUING TO DETERMINE THE EFFECTS OF PROCESS VARIABLES ON MIST ELIMINATOR PERFORMANCE AND ON LIMESTONE UTILIZATION. FUTURE PLANS INCLUDE* (1) FACTORIAL TESTING WITH LIME AND LIMESTONE TO DETERMINE THE EFFECTS OF PROCESS VARIABLES ON SO2 REMOVAL AND (2) TESTING THE OXIDATION OF SLUDGE TO GYPSUM IN THE VENTURI/SPRAY TOWER SYSTEM USING AIR SPARGING OF AN ACIDIFIED SLURRY BLEED STREAM.
JAN. 76			THE ADVANCED TEST PROGRAM IS CONTINUING. HIGHLIGHTS OF THE PROGRAM ARE AS FOLLOWS*

EVALUATE SCRUBBER OPERABILITY DURING VARIABLE LOAD OPERATION.

CONTINUE LONG-TERM RELIABILITY TESTING.

INVESTIGATE METHODS FOR IMPROVING WASTE SOLIDS SEPARATION.

CONTINUE SLUDGE OXIDATION AND SLUDGE FIXATION STUDY PROGRAMS.

EVALUATE SYSTEM PERFORMANCE AT REDUCED FLY ASH LOADINGS.

DETERMINE THE PRACTICAL UPPER LIMITS OF SO2 REMOVAL EFFICIENCY.

EVALUATE ADDITITION OF MAGNESIUM ION TO THE SCRUBBING SLURRY.

CHARACTERIZE ALL STACK GAS EMISSION COMPONENTS.

EVALUATE MATERIALS OF CONSTRUCTION OF ALL SCRUBBER AND PLANT-RELATED COMPONENTS.

TEST RUN PERIOD	FGD SYSTEM OPERATING HOURS 10A	10B	COMMENTS
			DEVELOP A COMPUTER PROGRAM FOR DESIGN AND COST ANALYSIS OF FULL-SCALE LIME/LIMESTONE SYSTEM.
MAR. 76			BECHTEL REPORTED THAT THE FACTORIAL TEST PROGRAM, EVALUATING THE PERFORMANCE
APR. 76			OF THE LIME/LIMESTONE SCRUBBING SYSTEMS WITH AND WITHOUT MAGNESIUM ADDITION HAS BEEN COMPLETED. CURRENTLY, TESTING IS PROCEEDING ON THE EVALUATION OF SYSTEM PERFORMANCE AS A FUNCTION OF LOW RESIDENCE TIMES (1.5 TO 5.0 MINUTES) IN THE RECYCLE TANKS. IN ADDITION, A FLY ASH-FREE DUCT IS BEING INSTALLED AT THE TEST FACILITY, THUS ENABLING EVALUATION OF SYSTEM PERFORMANCE IN THE ABSENCE OF FLY ASH.
MAY 76			THE TEST DIRECTOR, BECHTEL, PROVIDED THE FOLLOWING INPUT CONCERNING THE
JUN. 76			OPERATION OF THE EXPERIMENTAL SCRUBBING SYSTEMS DURING THE REPORT PERIOD*
			THE EFFECT OF MGO ADDITION WAS EXPLORED IN BOTH SCRUBBER SYSTEMS. RESULTS INDICATE MAGNESIUM ION IN THE SCRUBBER SLURRY LIQUOR ENCHANCES SO2 REMOVAL AND CAN DEPRESS SULFATE SUPERSATURATION. IT WAS FOUND THAT THE MAGNESIUM ION CONCENTRATION HAD TO EXCEED THE EQUIVALENT CHLORIDE ION CONCENTRATION TO HAVE AN EFFECT ON SO2 REMOVAL.
			IN THE TCA UNIT, WITH LIMESTONE SLURRY, SO2 REMOVAL WAS INCREASED FROM 75 TO 95 PERCENT BY INCREASING THE MAGNESIUM ION CONCENTRATION TO 9,000 PPM IN EXCESS OF EQUIVALENT CHLORIDE ION. TO ACHIEVE THIS CONCENTRATION LEVEL, MAGNESIUM OXIDE WAS ADDED AT A RATE EQUAL TO 6 PERCENT BY WEIGHT OF THE LIMESTONE ADDITION RATE.
			IN THE VENTURI/SPRAY TOWER SYSTEMS, WITH LIME SLURRY, SO2 REMOVAL WAS INCREASED FROM 75 TO 90 PERCENT BY INCREASING MAGNESIUM ION CONCENTRATION TO 2,000 PPM IN EXCESS OF EQUIVALENT CHLORIDE ION. THE MAGNESIUM OXIDE ADDITION RATE WAS 2 PERCENT BY WEIGHT OF THE LIME ADDITION RATE.

TEST RUN PERIOD	FGD SYSTEM OPERATING HOURS 10A	10B	COMMENTS
			BOTH SCRUBBING SYSTEMS OPERATED IN THE SUBSATURATED SULFATE MODE WHEN MAGNESIUM OXIDE WAS ADDED. INLET SO2 CONCENTRATIONS DURING THE TESTS AVERAGE APPROXIMATELY 3,000 PPM DURING THESE TESTS. FOLLOWING THE TEST BLOCKS MENTIONED ABOVE, BOTH SCRUBBERS ARE OPERATING WITH LIME SLURRY SCRUBBING SOLUTIONS, THE TCA SYSTEM ON FLUE GAS CONTAINING FLY ASH AND THE VENTURI/SPRAY TOWER SYSTEM ON FLY ASH-FREE FLUE GAS.
JUL. 76			EXPERIMENTAL OPERATION OF THE EPA/TVA ALKALI SCRUBBING TEST FACILITY CONTINUED
AUG. 76			DURING THE REPORT PERIOD. BECHTEL, THE TEST DIRECTOR, PROVIDED THE FOLLOWING INPUT CONCERNING THE OPERATION OF THE PROTOTYPE TEST UNITS.
			VENTURI/SPRAY TOWER SYSTEM* THIS SYSTEM OPERATED ON FLY ASH-FREE FLUE GAS USING A LIME SLURRY SCRUBBING SOLUTION. NO SIGNIFICANT DIFFERENCES IN SO2 REMOVAL, GYPSUM SATURATION AND SULFITE OXIDATION WERE DETECTED (VERSUS FLY ASH-LADEN FLUE GAS). ONE DIFFERENCE NOTED WAS THE FILTER CAKE SOLIDS CONTENT WHICH WAS APPROXIMATELY 10 PERCENT LOWER FOR THE FLY ASH-FREE SLUDGE (40 TO 50 PERCENT SOLIDS) VERSUS THE FLY ASH-LADEN SLUDGE (50 TO 60 PERCENT SOLIDS). IN ADDITION, OPERATION IN A LOW RESIDENCE TIME MODE (3-MINUTES) WAS EXPLORED. SCALE FREE OPERATION WAS ACHIEVED IN THIS MODE UNDER THE FOLLOWING CONDITIONS* 8 PERCENT SOLIDS (NO FLY ASH) IN THE RECIRCULATED SLURRY* PH OF THE SCRUBBER LIQUOR INLET WAS 8.0* SUPERFICIAL GAS VELOCITY OF 9.4 FT./SEC.* AND A TOTAL LIQUID GAS RATION (L/G) OF 71 GAL./MCF). SOME SCALE FORMATION OCCURRED WHEN THE SOLIDS CONTENT IN THE RECIRCULATED SLURRY DROPPED BELOW THE 4 PERCENT LEVEL.
			TCA SYSTEM* THIS SYSTEM OPERATED A FLY ASH-LADEN FLUE GAS USING A LIME SLURRY SCRUBBING SOLUTION INNOCULATED WITH MAGNESIUM OXIDE. GYPSUM SUB-SATURATION OPERATION WAS ACHIEVED UNDER THE FOLLOWING CONDITIONS* MAGNESIUM ION CONCENTRATION EXCEEDED THE CHLORIDE ION CONCENTRATION BY 2000

TEST RUN PERIOD	FGD SYSTEM OPERATING HOURS 10A	10B	COMMENTS
			PPM* SUPERFICIAL GAS VELOCITY WAS 12.5 FT./SEC.* L/G WAS 50* THE SCRUBBING SOLUTION INLET PH WAS 7.0* AND RESIDENCE TIME WAS 4-MINUTES. THE SO2 REMOVAL EFFICIENCY WAS APPROXIMATELY 90 PERCENT. WHEN THE L/G WAS REDUCED TO 37, WHILE ALL OTHER CONDITIONS REMAINED CONSTANT, SEVERE GYPSUM SCALE FORMATION RESULTED. INCREASING THE EFFECTIVE MAGNESIUM ION CONCENTRATION TO 4000 PPM AND THE SCRUBBER LIQUOR INLET PH TO 8.0 DID NOT AMELIORATE THE SCALE PROBLLEM. PRESENTLY, THE VENTURI/SPRAY TOWER SYSTEM IS OPERATING ON FLY ASH-FREE FLUE GAS WITH A MAGNESIUM OXIDE INNOCULATED LIME SCRUBBING SLURRY.
SEP. 76 OCT. 76			IN SEPTEMBER AND OCTOBER 1976, THE VENTURI/SPRAY SYSTEM WAS OPERATED WITH FLY ASH-FREE FLUE GAS USING LIME SLURRY WITH ADDED MAGNESIUM OXIDE. TYPICAL TEST CONDITIONS WERE 9.4 FT/SEC SPRAY TOWER GAS VELOCITY, 21 GAL/MCF VENTURI L/G, 50 GAL/MCF SPRAY TOWER L/G, 8 PERCENT SLURRY SOLIDS (FLY ASH-FREE), 3 MINUTES RESIDENCE TIME, 7.0 SCRUBBER INLET PH, AND 2000 PPM EFFECTIVE MG ION CONCENTRATION (I.E., EXCESS OVER EQUIVALENT CHLORIDE ION). RESULTS WERE NOT CONSISTENT AT THE CONDITIONS. DURING ONE PERIOD, SCRUBBING INLET LIQUOR GYPSUM SATURATION AVERAGED 85 PERCENT WITH 80 PERCENT SO2 REMOVAL AND WITH SOME GYPSUM SCALE FORMATION. IN A LATER PERIOD, AT SEEMINGLY IDENTICAL TEST CONDITIONS, GYPSUM SATURATIONS DROPPED TO 10 PERCENT WITH 98 PERCENT SO2 REMOVAL AND THE SCRUBBER DESCALED. A SEVEN-WEEK PROGRAM OF INTENSIVE FLUE GAS CHARACTERIZATION TESTING WAS STARTED IN MID-OCTOBER ON THE VENTURI/SPRAY TOWER SYSTEM. THESE TESTS ARE BEING MADE TO MEASURE SIMULTANEOUS INLET AND OUTLET FLUE GAS PART. MASS LOADING, PARTICULATE SIZE DISTRIBUTION, AND GASEOUS SO3 CONCENTRATION. THE TCA SYSTEM CONTINUED TO OPERATE DURING THIS PERIOD ON FLY ASH-LADEN FLUE GAS USING LIME SLURRY WITH ADDED MAGNESIUM OXIDE. THE TEST RESULTS SO FAR INDICATED THAT THE DEGREE OF SULFATE (GYPSUM) SUB-SATURATION

SHAWNEE NOS. 10A AND 10B (CONTINUED)

IS A SENSITIVE FUNCTION OF THE EFFLUENT RESIDENCE TIME AND THE APPEARS TO BE AN OPTIMIM RESIDENCE TIME AT WHICH MINIMUM SULFATE (GYPSUM) SUBSATURATION OCCURS. TYPICAL CONDITIONS* GAS VELOCITY 12.5 FT/SEC , L/G OF 50,PH OF 7.0, 2000 PPM OF MG ION, AND 8 PERCENT SOLIDS. AT THESE CONDITIONS GYPSUM SATURATIONS WERE 95, 50 AND 92 PERCENT, AT RESIDENCE TIMES OF 3,4, AND MINUTES, RESPECTIVELY. FURTHER TEST WERE RUN AT 37 GAL/MCF L/G AND 8/0 SCRUBBER INLET PH WITH OTHER CONDITIONS THE SAME. DURING THESE TESTS GYPSUM SATURATIONS WERE 95, 95, 50, AND 90 PERCENT AT 3,4, 5.4, AND 16 MINUTED RESIDENCE TIMES, RESPECTIVELY.

NOV. 76

DEC. 76

FROM MID-OCTOBEBER TO EARLY DECEMBER AN INTENSIVE FLUE GAS CHARACTERIZATION TEST PROGRAM WAS CONDUCTED ON THE VENTURI/SPRAY TOWER SYSTEM WITH LIME TESTING (SEE FIGURE 20-A IN APPENDIX.) FLY ASH-FREE AND LADEN FLUE INDEPENDENT OF SLURRY COMPOSITION (8 TO 15% SS, 3000 TO 16000 PPM TDS), GAS FLOW RATE (20,00 TO 35,000 ACFM), SPRAY TOWER LIQUOR RATE (0 TO 1400 GPM) AND VENTURI PRESSURE DROP (3 TO 9 IN. H20). WITH 4 TO 6 GR/DSCF PARTICULATE AT THE INLET, TYPICAL OUTLET LOADINGS WERE 0.02 TO 0.04 GR/DSCF. WHEN THE ESP WAS IN SERVICE, THE SCRUBBER OUTLET LOADING AVERAGED LESS THAN 0.005 GR/DSCF. SIZE DISTRIBUTION ANALYSIS IS PROCEEDING. ACID MIST VALUES WERE APPROXIMATELY 2 TO 25 PPM AT THE SCRUBBER INLET WITH REMOVAL IN THE 50 TO 75 PERCENT RANGE. DURING THE REMAINDER OF THE MONTH THE UNIT WAS DOWN FOR MODIFICATIONS FOR 2-STAGE OXIDATION TESTING (SEE FIGURE 2 -A IN APPENDIX C). FLY ASH-FREE AND LADEN FLUE GAS TESTING WITH LIME AND AND LIMESTONE SLURRIES WERE CONDUCTED DURING THE PERIOD ON THE TCA UNIT. MAGNESIUM OXIDE WAS NOT ADDED TO THE SLURRIES.

TABLE 4

NUMBER AND TOTAL MW OF FGD SYSTEMS

TABLE 4
NUMBER AND TOTAL MW OF FGD SYSTEMS

STATUS	NO.OF UNITS	MW
OPERATIONAL	30	6459.
UNDER CONSTRUCTION	31	13309.
PLANNING		
CONTRACT AWARDED	20	9981.
LETTER OF INTENT	2	365.
REQUESTING/EVALUATING BIDS	4	2327.
CONSIDERING ONLY FGD SYSTEMS	37	16726.
TOTAL	124	49167.

TABLE 5

SUMMARY OF FGD SYSTEMS BY COMPANY

TABLE 5
SUMMARY OF FGD SYSTEMS BY COMPANY

UTILITY	TOTAL		OPERATIONAL		CONSTRUCTION		STATUS: PLANNED: CONTRACT AWARDED		LETTER OF INTENT		REQUESTING/ EVAL. BIDS		CONSIDERING FGD SYSTEMS	
	NO.	MW	NO.	MW	NO.	MW	NO.	MW	NO.	MW	NO.	MW	NO.	MW
ALABAMA ELECTRIC COOP	2	450.	0	0.	2	450.	0	0.	0	0.	0	0.	0	0.
ALLEGHENY POWER SYSTEM	2	1250.	0	0.	2	1250.	0	0.	0	0.	0	0.	0	0.
ARIZONA ELECTRIC POWER COOP	2	400.	0	0.	2	400.	0	0.	0	0.	0	0.	0	0.
ARIZONA PUBLIC SERVICE	5	1875.	2	275.	1	250.	0	0.	0	0.	0	0.	2	1350.
BASIN ELECTRIC POWER COOP	5	2550.	0	0.	0	0.	2	1100.	0	0.	0	0.	3	1450.
BIG RIVERS ELECTRIC COOP CORP.	1	250.	0	0.	1	250.	0	0.	0	0.	0	0.	0	0.
BRAZOS ELECTRIC POWER COOP	1	400.	0	0.	0	0.	1	400.	0	0.	0	0.	0	0.
CENTRAL ILLINOIS LIGHT CO.	3	800.	1	100.	1	300.	0	0.	0	0.	0	0.	1	400.
CENTRAL ILLINOIS PUBLIC SERV	1	575.	0	0.	1	575.	0	0.	0	0.	0	0.	0	0.
CINCINNATI GAS & ELECTRIC CO.	1	600.	0	0.	0	0.	0	0.	0	0.	0	0.	1	600.
COLORADO UTE ELECTRICAL ASSN.	2	900.	0	0.	0	0.	0	0.	0	0.	0	0.	2	900.
COLUMBUS & SOUTHERN OHIO ELEC.	4	1550.	0	0.	1	400.	1	400.	0	0.	0	0.	2	750.
COMMONWEALTH EDISON	2	592.	1	167.	0	0.	1	425.	0	0.	0	0.	0	0.
DETROIT EDISON	1	163.	1	163.	0	0.	0	0.	0	0.	0	0.	0	0.
DUQUESNE LIGHT	2	920.	2	920.	0	0.	0	0.	0	0.	0	0.	0	0.
EASTERN KENTUCKY POWER COOP	1	500.	0	0.	0	0.	0	0.	0	0.	0	0.	1	500.
GENERAL MOTORS	1	32.	1	32.	0	0.	0	0.	0	0.	0	0.	0	0.
GULF POWER CO.	1	23.	1	23.	0	0.	0	0.	0	0.	0	0.	0	0.
INDIANAPOLIS POWER & LIGHT CO.	2	1060.	0	0.	1	530.	0	0.	0	0.	0	0.	1	530.
KANSAS CITY POWER & LIGHT	3	1060.	3	1060.	0	0.	0	0.	0	0.	0	0.	0	0.
KANSAS POWER & LIGHT	4	1885.	2	525.	2	1360.	0	0.	0	0.	0	0.	0	0.
KENTUCKY UTILITIES	1	64.	1	64.	0	0.	0	0.	0	0.	0	0.	0	0.
KEY WEST UTILITY BOARD	1	37.	1	37.	0	0.	0	0.	0	0.	0	0.	0	0.
LOUISVILLE GAS & ELECTRIC	8	2213.	2	243.	2	608.	2	702.	0	0.	0	0.	2	660.
MINNESOTA POWER AND LIGHT CO.	1	500.	0	0.	0	0.	0	0.	0	0.	1	500.	0	0.
MINNKOTA POWER COOPERATIVE	1	450.	0	0.	1	450.	0	0.	0	0.	0	0.	0	0.
MONTANA POWER CO.	4	2120.	2	720.	0	0.	2	1400.	0	0.	0	0.	0	0.
NEVADA POWER	10	3000.	3	375.	0	0.	0	0.	1	125.	0	0.	6	2500.
NEW ENGLAND ELEC SYSTEM	1	650.	0	0.	0	0.	0	0.	0	0.	0	0.	1	650.
NIAGARA MOHAWK POWER COOP.	1	100.	0	0.	0	0.	0	0.	0	0.	0	0.	1	100.
NORTHERN INDIANA PUB SERVICE	2	590.	0	0.	0	0.	0	0.	0	0.	0	0.	2	590.
NORTHERN INDIANA PUBLIC SERVIC	1	115.	0	0.	1	115.	0	0.	0	0.	0	0.	0	0.
NORTHERN STATES POWER CO.	4	3110.	1	710.	1	680.	0	0.	0	0.	0	0.	2	1720.
OTTER TAIL POWER COMPANY	1	400.	0	0.	0	0.	0	0.	0	0.	0	0.	1	400.
PACIFIC POWER AND LIGHT CO.	1	509.	0	0.	0	0.	1	509.	0	0.	0	0.	0	0.
PENNSYLVANIA POWER CO.	3	2505.	1	835.	1	835.	1	835.	0	0.	0	0.	0	0.
PHILADELPHIA ELECTRIC CO.	4	846.	1	120.	0	0.	0	0.	1	240.	0	0.	2	486.
POTOMAC ELECTRIC & POWER	2	380.	0	0.	0	0.	0	0.	0	0.	0	0.	2	380.
PUBLIC SERVICE CO OF COLORADO	1	50.	1	50.	0	0.	0	0.	0	0.	0	0.	0	0.
PUBLIC SERVICE CO OF NEW MEX.	4	1715.	0	0.	2	715.	0	0.	0	0.	0	0.	2	1000.
PUBLIC SERVICE OF INDIANA	2	1300.	0	0.	0	0.	0	0.	0	0.	2	1300.	0	0.
RICKENBACKER AFB	1	20.	1	20.	0	0.	0	0.	0	0.	0	0.	0	0.
SALT RIVER PROJECT	3	1050.	0	0.	0	0.	2	700.	0	0.	0	0.	1	350.
SOUTH CAROLINA PUBLIC SERVICE	1	280.	0	0.	1	280.	0	0.	0	0.	0	0.	0	0.

TABLE 5
SUMMARY OF FGD SYSTEMS BY COMPANY

UTILITY	TOTAL		OPERATIONAL		CONSTRUCTION		STATUS: PLANNED: CONTRACT AWARDED		LETTER OF INTENT		REQUESTING/ EVAL. BIDS		CONSIDERING FGD SYSTEMS	
	NO.	MW	NO.	MW	NO.	MW	NO.	MW	NO.	MW	NO.	MW	NO.	MW
SOUTHERN CALIFORNIA EDISON	2	1410.	0	0.	0	0.	0	0.	0	0.	0	0.	2	1410.
SOUTHERN ILLINOIS POWER COOP	1	184.	0	0.	0	0.	1	184.	0	0.	0	0.	0	0.
SOUTHERN INDIANA GAS&ELECTRIC	1	250.	0	0.	0	0.	1	250.	0	0.	0	0.	0	0.
SOUTHERN MISSISSIPPI ELECTRIC	2	360.	0	0.	2	360.	0	0.	0	0.	0	0.	0	0.
SPRINGFIELD CITY UTILITIES	1	200.	0	0.	1	200.	0	0.	0	0.	0	0.	0	0.
TENNESSEE VALLEY AUTHORITY	3	570.	2	20.	1	550.	0	0.	0	0.	0	0.	0	0.
TEXAS UTILITIES CO.	5	3922.	0	0.	3	2336.	2	1586.	0	0.	0	0.	0	0.
UNITED POWER ASSOCIATION	2	1090.	0	0.	0	0.	2	1090.	0	0.	0	0.	0	0.
UTAH POWER & LIGHT CO.	2	815.	0	0.	1	415.	1	400.	0	0.	0	0.	0	0.
WISCONSIN POWER & LIGHT CO.	1	527.	0	0.	0	0.	0	0.	0	0.	1	527.	0	0.
TOTALS	124	49167.	30	6459.	31	13309.	20	9981.	2	365.	4	2327.	37	16726.

TABLE 6

SUMMARY OF FGD SYSTEMS BY VENDOR

TABLE 6
SUMMARY OF FGD SYSTEMS BY VENDOR

MANUFACTURER/PROCESS	TOTAL NO.	TOTAL MW	STATUS: OPERATIONAL NO.	OPERATIONAL MW	CONSTRUCTION NO.	CONSTRUCTION MW
ADL/COMBUSTION EQUIP ASSOCIATE						
LIME/ALKALINE FLYASH SCRUBBING	3	1170.	2	720.	1	450.
SODIUM CARBONATE SCRUBBING	3	375.	3	375.	0	0.
TOTAL, ADL/COMBUSTION EQUIP ASS	6	1545.	5	1095.	1	450.
AMERICAN AIR FILTER						
LIME SCRUBBING	4	917.	2	242.	2	675.
TOTAL, AMERICAN AIR FILTER	4	917.	2	242.	2	675.
BABCOCK & WILCOX						
LIMESTONE SCRUBBING	3	1267.	2	987.	1	280.
TOTAL, BABCOCK & WILCOX	3	1267.	2	987.	1	280.
BABCOCK AND WILCOX						
LIME SCRUBBING	2	1250.	0	0.	2	1250.
TOTAL, BABCOCK AND WILCOX	2	1250.	0	0.	2	1250.
BUELL/ENVIROTECH						
DOUBLE ALKALI SCRUBBING	1	575.	0	0.	1	575.
TOTAL, BUELL/ENVIROTECH	1	575.	0	0.	1	575.
CHEMICO						
LIME SCRUBBING	5	3005.	3	1755.	2	1250.
LIME/LIMESTONE SCRUBBING	1	10.	1	10.	0	0.
LIMESTONE SCRUBBING	1	750.	0	0.	1	750.
TOTAL, CHEMICO	7	3765.	4	1765.	3	2000.
CHIYODA INTERNATIONAL						
THOROUGHBRED 101	1	23.	1	23.	0	0.
TOTAL, CHIYODA INTERNATIONAL	1	23.	1	23.	0	0.
COMBUSTION ENGINEERING						
LIME SCRUBBING	2	248.	1	65.	1	183.
LIMESTONE INJECTION &WET SCRUB	4	765.	4	765.	0	0.
LIMESTONE SCRUBBING	4	2750.	1	710.	3	2040.
TOTAL, COMBUSTION ENGINEERING	10	3763.	6	1540.	4	2223.
DAVY POWERGAS/ALLIED CHEMICAL						
WELLMAN LORD/ALLIED CHEMICAL	3	830.	0	0.	3	830.
TOTAL, DAVY POWERGAS/ALLIED CHE	3	830.	0	0.	3	830.

TABLE 6
SUMMARY OF FGD SYSTEMS BY VENDOR

MANUFACTURER/PROCESS	TOTAL NO.	TOTAL MW	STATUS OPERATIONAL NO.	STATUS OPERATIONAL MW	STATUS CONSTRUCTION NO.	STATUS CONSTRUCTION MW
KOCH/GENERAL MOTORS						
DOUBLE ALKALI SCRUBBING	1	32.	1	32.	0	0.
TOTAL, KOCH/GENERAL MOTORS	1	32.	1	32.	0	0.
PEABODY ENGINEERING						
LIMESTONE SCRUBBING	3	613.	1	163.	2	450.
TOTAL, PEABODY ENGINEERING	3	613.	1	163.	2	450.
RESEARCH COTTRELL						
LIME SCRUBBING	1	20.	1	20.	0	0.
LIMESTONE SCRUBBING	6	2351.	1	115.	5	2236.
TOTAL, RESEARCH COTTRELL	7	2371.	2	135.	5	2236.
RILEY STOKER / ENVIRONEERING						
LIMESTONE SCRUBBING	4	760.	1	100.	3	660.
TOTAL, RILEY STOKER / ENVIRONEE	4	760.	1	100.	3	660.
SO. CALIFORNIA EDISON						
LIME SCRUBBING	1	160.	1	160.	0	0.
TOTAL, SO. CALIFORNIA EDISON	1	160.	1	160.	0	0.
TENNESSEE VALLEY AUTHORITY						
LIMESTONE SCRUBBING	1	550.	0	0.	1	550.
TOTAL, TENNESSEE VALLEY AUTHORI	1	550.	0	0.	1	550.
UNITED ENGINEERS / PECO						
MAGNESIUM OXIDE SCRUBBING	1	120.	1	120.	0	0.
TOTAL, UNITED ENGINEERS / PECO	1	120.	1	120.	0	0.
UNIVERSAL OIL PRODUCTS						
LIME SCRUBBING	1	400.	0	0.	1	400.
LIME/LIMESTONE SCRUBBING	1	10.	1	10.	0	0.
LIMESTONE SCRUBBING	2	730.	0	0.	2	730.
TOTAL, UNIVERSAL OIL PRODUCTS	4	1140.	1	10.	3	1130.
UOP / PUB SERVICE OF COLORADO						
LIMESTONE SCRUBBING	1	50.	1	50.	0	0.
TOTAL, UOP / PUB SERVICE OF COL	1	50.	1	50.	0	0.
ZURN AIR SYSTEMS						
LIMESTONE SCRUBBING	1	37.	1	37.	0	0.
TOTAL, ZURN AIR SYSTEMS	1	37.	1	37.	0	0.

TABLE 6
SUMMARY OF FGD SYSTEMS BY VENDOR

MANUFACTURER/PROCESS	TOTAL NO.	TOTAL MW	STATUS OPERATIONAL NO.	STATUS OPERATIONAL MW	STATUS CONSTRUCTION NO.	STATUS CONSTRUCTION MW
	61	19768.	30	6459.	31	13309.

TABLE 7

SUMMARY OF NEW AND RETROFIT FGD SYSTEMS BY PROCESS

TABLE 7
SUMMARY OF NEW AND RETROFIT FGD SYSTEMS BY PROCESS

MW CAPACITY(NO. OF PLANTS)

PROCESS	NEW OR RETROFIT	OPERATIONAL		CONSTRUCTION		PLANNED: CONTRACT AWARDED		PLANNED: LETTER OF INTENT		PLANNED: REQUESTING/ EVAL. BIDS		PLANNED: CONSIDERING FGD SYSTEM		TOTAL NO. OF PLANTS	
		NO.	MW	NO.	MW	NO.	MW	NO.	MW	NO.	MW	NO.	MW	NO.	MW
LIME SCRUBBING	N	1	835	7	3575	6	3150	0	0	0	0	0	0	14	7560
	R	7	1407	1	183	0	0	0	0	0	0	2	660	10	2250
LIME/ALKALINE FLYASH SCRUBBING (PROCESS NOT SELECTED)	N	2	720	1	450	2	1400	0	0	0	0	0	0	5	2570
	R	0	0	0	0	0	0	0	0	0	0	0	0	0	0
LIME/LIMESTONE SCRUBBING (PROCESS NOT SELECTED)	N	0	0	0	0	0	0	0	0	1	527	2	900	3	1427
	R	2	20	0	0	0	0	0	0	0	0	2	1410	4	1430
LIMESTONE SCRUBBING	N	5	2067	17	7146	8	3970	0	0	0	0	3	1280	33	14463
	R	7	860	1	550	1	425	0	0	0	0	0	0	9	1835
SUBTOTAL - LIME/LIMESTONE	N	8.	3622.	25.	11171.	16.	8520.	0.	0.	1.	527.	5.	2180.	55.	26020.
	R	16.	2287.	2.	733.	1.	425.	0.	0.	0.	0.	4.	2070.	23.	5515.
AQUEOUS CARBONATE SCRUBBING	N	0	0	0	0	0	0	0	0	0	0	0	0	0	0
	R	0	0	0	0	0	0	0	0	0	0	1	100	1	100
DOUBLE ALKALI SCRUBBING	N	0	0	1	575	1	250	0	0	0	0	0	0	2	825
	R	1	32	0	0	1	277	0	0	0	0	0	0	2	309
MAGNESIUM OXIDE SCRUBBING	N	0	0	0	0	0	0	0	0	0	0	0	0	0	0
	R	1	120	0	0	0	0	1	240	0	0	2	486	4	846
NOT SELECTED	N	0	0	0	0	0	0	0	0	3	1800	16	7920	19	9720
	R	0	0	0	0	0	0	0	0	0	0	6	2320	6	2320
REGENERABLE NOT SELECTED	N	0	0	0	0	0	0	0	0	0	0	2	1000	2	1000
	R	0	0	0	0	0	0	0	0	0	0	1	650	1	650
SODIUM CARBONATE SCRUBBING	N	1	125	0	0	1	509	1	125	0	0	0	0	3	759
	R	2	250	0	0	0	0	0	0	0	0	0	0	2	250
THOROUGHBRED 101	N	0	0	0	0	0	0	0	0	0	0	0	0	0	0
	R	1	23	0	0	0	0	0	0	0	0	0	0	1	23
WELLMAN LORD/ALLIED CHEMICAL	N	0	0	1	375	0	0	0	0	0	0	0	0	1	375
	R	0	0	2	455	0	0	0	0	0	0	0	0	2	455
TOTALS	N	9.	3747.	27.	12121.	18.	9279.	1.	125.	4.	2327.	23.	11100.	82.	38699.
	R	21.	2712.	4.	1188.	2.	702.	1.	240.	0.	0.	14.	5626.	42.	10468.
LIME/LIMESTONE % OF TOTAL MW	N	97		92		92		0		23		20		67	
	R	84		62		61		0		0		37		53	

TABLE 8

SUMMARY OF OPERATING FGD SYSTEMS BY PROCESS AND GENERATING UNITS

TABLE 8
SUMMARY OF OPERATING FGD SYSTEMS BY
PROCESS AND GENERATING UNITS AS OF 12/76

PROCESS/GENERATING UNITS	FGD/MW	STARTUP	EXPERIENCE(MO.)
DOUBLE ALKALI SCRUBBING			
CHEVROLET PARMA 1 2 3 & 4	32	3-74	33
	32.		33
LIME SCRUBBING			
BRUCE MANSFIELD NO. 1	835	4-76	8
CANE RUN NO 4	178	8-76	4
ELRAMA POWER STATION	510	10-75	14
FOUR CORNERS NO. 5A	160	2-76	10
GREEN RIVER UNITS 1 AND 2	64	9-75	15
PADDYS RUN NO 6	65	4-73	44
PHILLIPS POWER STATION	410	7-73	41
RICKENBACKER	20	3-76	9
	2242.		145
LIME/ALKALINE FLYASH SCRUBBING			
COLSTRIP NO 1	360	10-75	14
COLSTRIP NO 2	360	7-76	5
	720.		19
LIME/LIMESTONE SCRUBBING			
SHAWNEE NO.10A	10	4-72	56
SHAWNEE NO.10B	10	4-72	56
	20.		112
LIMESTONE SCRUBBING			
HAWTHORN NO 3	140	11-72	49
HAWTHORN NO 4	100	8-72	52
LAWRENCE NO 4	125	12-68	96
LAWRENCE NO 5	400	11-71	61
CHOLLA NO 1	115	10-73	38
DUCK CREEK NO. 1A	100	9-76	3
LA CYGNE NO 1	820	2-73	46

TABLE 8
SUMMARY OF OPERATING FGD SYSTEMS BY
PROCESS AND GENERATING UNITS AS OF 12/76

PROCESS/GENERATING UNITS	FGD/MW	STARTUP	EXPERIENCE(MO.)
SHERBURNE COUNTY STATION NO.1	710	3-76	9
ST. CLAIR NO 6	163	5-76	7
STOCK ISLAND PLANT	37	10-72	50
VALMONT NO. 5	50	10-74	26
WILL COUNTY NO 1	167	2-72	58
	2927.		495
MAGNESIUM OXIDE SCRUBBING			
EDDYSTONE NO 1A	120	9-75	15
	120.		15
SODIUM CARBONATE SCRUBBING			
REID GARDNER NO 1	125	4-74	32
REID GARDNER NO 2	125	4-74	32
REID GARDNER NO 3	125	7-76	5
	375.		69
THOROUGHBRED 101			
SCHOLZ NOS. 1B & 2B	23	3-75	21
	23.		21

TABLE 9

SUMMARY OF SLUDGE DISPOSAL PRACTICES FOR OPERATIONAL FGD SYSTEMS

TABLE 9
SUMMARY OF SLUDGE DISPOSAL PRACTICES FOR OPERATIONAL FGD SYSTEMS AS OF 12/76

PROCESS/GENERATING UNIT	--SLUDGE-- STABILIZED	--SLUDGE-- UNSTABILIZED	---POND--- LINED	---POND--- UNLINED
DOUBLE ALKALI SCRUBBING				
CHEVROLET PARMA 1 2 3 & 4		32		32
TOTAL	0.	32.	0.	32.
LIME SCRUBBING				
BRUCE MANSFIELD NO. 1	835			835
CANE RUN NO 4	178			178
ELRAMA POWER STATION	510			510
GREEN RIVER UNITS 1 AND 2	64			64
PADDYS RUN NO 6		65		65
PHILLIPS POWER STATION	410			410
RICKENBACKER		20	20	
TOTAL	1997.	85.	20.	2062.
LIME/ALKALINE FLYASH SCRUBBING				
COLSTRIP NO 1		360		360
COLSTRIP NO 2		360		360
TOTAL	0.	720.	0.	720.
LIMESTONE SCRUBBING				
HAWTHORN NO 3		140		140
HAWTHORN NO 4		100		100
LAWRENCE NO 4		125		125
LAWRENCE NO 5		400		400
CHOLLA NO 1		115		115
DUCK CREEK NO. 1A		100	100	
LA CYGNE NO 1		820		820
SHERBURNE COUNTY STATION NO.1		710	710	
ST. CLAIR NO 6		163	163	
STOCK ISLAND PLANT		37		37
VALMONT NO. 5		50	50	
WILL COUNTY NO 1	167		167	
TOTAL	167.	2760.	1190.	1737.

TABLE 9
SUMMARY OF SLUDGE DISPOSAL PRACTICES FOR OPERATIONAL FGD SYSTEMS AS OF 12/76

PROCESS/GENERATING UNIT	--SLUDGE-- STABILIZED	--SLUDGE-- UNSTABILIZED	---POND--- LINED	---POND--- UNLINED
SODIUM CARBONATE SCRUBBING				
REID GARDNER NO 1		125		125
REID GARDNER NO 2		125		125
REID GARDNER NO 3		125		125
TOTAL	0.	375.	0.	375.
THOROUGHBRED 101				
SCHOLZ NOS. 1B & 2B		23	23	
TOTAL	0.	23.	23.	0.

TABLE 10

SUMMARY OF FGD SYSTEMS BY PROCESS AND REGULATORY CLASS

TABLE 10
SUMMARY OF FGD SYSTEMS BY PROCESS AND REGULATORY CLASS

MW CAPACITY(NO. OF PLANTS)

PROCESS	REGULATORY CLASS	OPERATIONAL		CONSTRUCTION		PLANNED: CONTRACT AWARDED		PLANNED: LETTER OF INTENT		PLANNED: REQUESTING/ EVAL. BIDS		PLANNED: CONSIDERING FGD SYSTEM		TOTAL NO. OF PLANTS	
		NO.	MW	NO.	MW	NO.	MW	NO.	MW	NO.	MW	NO.	MW	NO.	MW
LIME SCRUBBING	A	0	0	5	2340	4	1915	0	0	0	0	0	0	9	4255
	B	4	1915	2	1235	2	1235	0	0	0	0	0	0	8	4385
	C	3	307	1	183	0	0	0	0	0	0	2	660	6	1150
	D	0	0	0	0	0	0	0	0	0	0	0	0	0	0
	E	1	20	0	0	0	0	0	0	0	0	0	0	1	20
LIME/ALKALINE FLYASH SCRUBBING (PROCESS NOT SELECTED)	A	1	360	0	0	2	1400	0	0	0	0	0	0	3	1760
	B	0	0	1	450	0	0	0	0	0	0	0	0	1	450
	C	1	360	0	0	0	0	0	0	0	0	0	0	1	360
	D	0	0	0	0	0	0	0	0	0	0	0	0	0	0
	E	0	0	0	0	0	0	0	0	0	0	0	0	0	0
LIME/LIMESTONE SCRUBBING (PROCESS NOT SELECTED)	A	0	0	0	0	0	0	0	0	1	527	0	0	1	527
	B	0	0	0	0	0	0	0	0	0	0	2	900	2	900
	C	2	20	0	0	0	0	0	0	0	0	0	0	2	20
	D	0	0	0	0	0	0	0	0	0	0	0	0	0	0
	E	0	0	0	0	0	0	0	0	0	0	2	1410	2	1410
LIMESTONE SCRUBBING	A	1	100	11	4456	3	1770	0	0	0	0	2	930	17	7256
	B	4	1065	6	2690	4	1800	0	0	0	0	1	350	15	5905
	C	4	1167	1	550	1	425	0	0	0	0	0	0	6	2162
	D	2	525	0	0	0	0	0	0	0	0	0	0	2	525
	E	1	50	0	0	1	400	0	0	0	0	0	0	2	450
SUBTOTAL - LIME/LIMESTONE	A	2.	460.	16.	6796.	9.	5085.	0.	0.	1.	527.	2.	930.	30.	13798.
	B	8.	2980.	9.	4375.	6.	3035.	0.	0.	0.	0.	3.	1250.	26.	11640.
	C	10.	1874.	2.	733.	1.	425.	0.	0.	0.	0.	2.	660.	15.	3692.
	D	2.	525.	0.	0.	0.	0.	0.	0.	0.	0.	0.	0.	2.	525.
	E	2.	70.	0.	0.	1.	400.	0.	0.	0.	0.	2.	1410.	5.	1880.

A. BOILER CONSTRUCTED SUBJECT TO FEDERAL NSPS
B. BOILER SUBJECT TO STATE STANDARD THAT IS MORE STRINGENT THAN THE FEDERAL NSPS
C. BOILER SUBJECT TO STATE STANDARD THAT IS EQUAL TO OR LESS STRINGENT THAN NSPS
D. OTHER
E. REGULATORY CLASS UNKNOWN

TABLE 10
SUMMARY OF FGD SYSTEMS BY PROCESS AND REGULATORY CLASS

MW CAPACITY(NO. OF PLANTS)

PROCESS	REGULATORY CLASS	OPERATIONAL		CONSTRUCTION		PLANNED: CONTRACT AWARDED		PLANNED: LETTER OF INTENT		PLANNED: REQUESTING/ EVAL. BIDS		PLANNED: CONSIDERING FGD SYSTEM		TOTAL NO. OF PLANTS	
		NO.	MW	NO.	MW	NO.	MW	NO.	MW	NO.	MW	NO.	MW	NO.	MW
AQUEOUS CARBONATE SCRUBBING	A	0	0	0	0	0	0	0	0	0	0	0	0	0	0
	B	0	0	0	0	0	0	0	0	0	0	0	0	0	0
	C	0	0	0	0	0	0	0	0	0	0	1	100	1	100
	D	0	0	0	0	0	0	0	0	0	0	0	0	0	0
	E	0	0	0	0	0	0	0	0	0	0	0	0	0	0
DOUBLE ALKALI SCRUBBING	A	0	0	1	575	1	250	0	0	0	0	0	0	2	825
	B	1	32	0	0	0	0	0	0	0	0	0	0	1	32
	C	0	0	0	0	1	277	0	0	0	0	0	0	1	277
	D	0	0	0	0	0	0	0	0	0	0	0	0	0	0
	E	0	0	0	0	0	0	0	0	0	0	0	0	0	0
MAGNESIUM OXIDE SCRUBBING	A	0	0	0	0	0	0	0	0	0	0	0	0	0	0
	B	1	120	0	0	0	0	1	240	0	0	2	486	4	846
	C	0	0	0	0	0	0	0	0	0	0	0	0	0	0
	D	0	0	0	0	0	0	0	0	0	0	0	0	0	0
	E	0	0	0	0	0	0	0	0	0	0	0	0	0	0
NOT SELECTED	A	0	0	0	0	0	0	0	0	3	1800	4	2820	7	4620
	B	0	0	0	0	0	0	0	0	0	0	14	6450	14	6450
	C	0	0	0	0	0	0	0	0	0	0	4	970	4	970
	D	0	0	0	0	0	0	0	0	0	0	0	0	0	0
	E	0	0	0	0	0	0	0	0	0	0	0	0	0	0
REGENERABLE NOT SELECTED	A	0	0	0	0	0	0	0	0	0	0	0	0	0	0
	B	0	0	0	0	0	0	0	0	0	0	2	1000	2	1000
	C	0	0	0	0	0	0	0	0	0	0	1	650	1	650
	D	0	0	0	0	0	0	0	0	0	0	0	0	0	0
	E	0	0	0	0	0	0	0	0	0	0	0	0	0	0

A. BOILER CONSTRUCTED SUBJECT TO FEDERAL NSPS
B. BOILER SUBJECT TO STATE STANDARD THAT IS MORE STRINGENT THAN THE FEDERAL NSPS
C. BOILER SUBJECT TO STATE STANDARD THAT IS EQUAL TO OR LESS STRINGENT THAN NSPS
D. OTHER
E. REGULATORY CLASS UNKNOWN

TABLE 10
SUMMARY OF FGD SYSTEMS BY PROCESS AND REGULATORY CLASS

MW CAPACITY(NO. OF PLANTS)

PROCESS	REGULATORY CLASS	OPERATIONAL		CONSTRUCTION		PLANNED: CONTRACT AWARDED		PLANNED: LETTER OF INTENT		PLANNED: REQUESTING/ EVAL. BIDS		PLANNED: CONSIDERING FGD SYSTEM		TOTAL NO. OF PLANTS	
		NO.	MW	NO.	MW	NO.	MW	NO.	MW	NO.	MW	NO.	MW	NO.	MW
SODIUM CARBONATE SCRUBBING	A	0	0	0	0	0	0	0	0	0	0	0	0	0	0
	B	3	375	0	0	1	509	1	125	0	0	0	0	5	1009
	C	0	0	0	0	0	0	0	0	0	0	0	0	0	0
	D	0	0	0	0	0	0	0	0	0	0	0	0	0	0
	E	0	0	0	0	0	0	0	0	0	0	0	0	0	0
THOROUGHBRED 101	A	0	0	0	0	0	0	0	0	0	0	0	0	0	0
	B	0	0	0	0	0	0	0	0	0	0	0	0	0	0
	C	1	23	0	0	0	0	0	0	0	0	0	0	1	23
	D	0	0	0	0	0	0	0	0	0	0	0	0	0	0
	E	0	0	0	0	0	0	0	0	0	0	0	0	0	0
WELLMAN LORD/ALLIED CHEMICAL	A	0	0	0	0	0	0	0	0	0	0	0	0	0	0
	B	0	0	2	715	0	0	0	0	0	0	0	0	2	715
	C	0	0	1	115	0	0	0	0	0	0	0	0	1	115
	D	0	0	0	0	0	0	0	0	0	0	0	0	0	0
	E	0	0	0	0	0	0	0	0	0	0	0	0	0	0
TOTALS	A	2.	460.	17.	7371.	10.	5335.	0.	0.	4.	2327.	6.	3750.	39.	19243.
	B	13.	3507.	11.	5090.	7.	3544.	2.	365.	0.	0.	21.	9186.	54.	21692.
	C	11.	1897.	3.	848.	2.	702.	0.	0.	0.	0.	8.	2380.	24.	5827.
	D	2.	525.	0.	0.	0.	0.	0.	0.	0.	0.	0.	0.	2.	525.
	E	2.	70.	0.	0.	1.	400.	0.	0.	0.	0.	2.	1410.	5.	1880.
LIME/STONE % OF TOTAL MW	A	100		92		95		0		23		25		72	
	B	85		86		86		0		0		14		54	
	C	99		86		61		0		0		28		63	
	D	100		0		0		0		0		0		100	
	E	100		0		100		0		0		100		100	

A. BOILER CONSTRUCTED SUBJECT TO FEDERAL NSPS
B. BOILER SUBJECT TO STATE STANDARD THAT IS MORE STRINGENT THAN THE FEDERAL NSPS
C. BOILER SUBJECT TO STATE STANDARD THAT IS EQUAL TO OR LESS STRINGENT THAN NSPS
D. OTHER
E. REGULATORY CLASS UNKNOWN

TABLE 11

SUMMARY OF OPERATIONAL FGD SYSTEMS

TABLE 11
SUMMARY OF OPERATIONAL FGD SYSTEMS AS OF 12/76

UTILITY COMPANY POWER STATION	NEW OR RETROFIT	SIZE OF FGD UNIT (MW)	PROCESS/VENDOR	FUEL CHARACTERISTICS	MO/YR
ARIZONA PUBLIC SERVICE FOUR CORNERS NO. 5A	R	160	SO. CALIFORNIA EDISON LIME SCRUBBING	COAL 0.7 PERCENT SULFUR	2/76
ARIZONA PUBLIC SERVICE CHOLLA NO 1	R	115	RESEARCH COTTRELL LIMESTONE SCRUBBING	COAL 0.44-1 PERCENT SULFUR	10/73
CENTRAL ILLINOIS LIGHT CO. DUCK CREEK NO. 1A	N	100	RILEY STOKER / ENVIRONEERING LIMESTONE SCRUBBING	COAL 2.5 - 3.0 PERCENT SULFUR	9/76
COMMONWEALTH EDISON WILL COUNTY NO 1	R	167	BABCOCK & WILCOX LIMESTONE SCRUBBING	COAL 4.0 PERCENT SULFUR	2/72
DETROIT EDISON ST. CLAIR NO 6	R	163	PEABODY ENGINEERING LIMESTONE SCRUBBING	COAL 3.7 PERCENT SULFUR	5/76
DUQUESNE LIGHT PHILLIPS POWER STATION	R	410	CHEMICO LIME SCRUBBING	COAL 1.0- 2.8 PERCENT SULFUR	7/73
DUQUESNE LIGHT ELRAMA POWER STATION	R	510	CHEMICO LIME SCRUBBING	COAL 1.0 - 2.8 PERCENT SULFUR	10/75
GENERAL MOTORS CHEVROLET PARMA 1 2 3 & 4	R	32	KOCH/GENERAL MOTORS DOUBLE ALKALI SCRUBBING	COAL 2.5 PERCENT SULFUR	3/74
GULF POWER CO. SCHOLZ NOS. 1B & 2B	R	23	CHIYODA INTERNATIONAL THOROUGHBRED 101	COAL 5.0 PERCENT SULFUR (MAX)	3/75
KANSAS CITY POWER & LIGHT HAWTHORN NO 3	R	140	COMBUSTION ENGINEERING LIMESTONE INJECTION &WET SCRUB	COAL 0.6- 3.0 PERCENT SULFUR	11/72
KANSAS CITY POWER & LIGHT HAWTHORN NO 4	R	100	COMBUSTION ENGINEERING LIMESTONE INJECTION &WET SCRUB	COAL 0.6- 3.0 PERCENT SULFUR	8/72
KANSAS CITY POWER & LIGHT LA CYGNE NO 1	N	820	BABCOCK & WILCOX LIMESTONE SCRUBBING	COAL 5.0 PERCENT SULFUR	2/73
KANSAS POWER & LIGHT LAWRENCE NO 4	R	125	COMBUSTION ENGINEERING LIMESTONE INJECTION &WET SCRUB	COAL 0.5 PERCENT SULFUR	12/68
KANSAS POWER & LIGHT LAWRENCE NO 5	N	400	COMBUSTION ENGINEERING LIMESTONE INJECTION &WET SCRUB	COAL 0.5 PERCENT SULFUR	11/71
KENTUCKY UTILITIES GREEN RIVER UNITS 1 AND 2	R	64	AMERICAN AIR FILTER LIME SCRUBBING	COAL 3.8 PERCENT SULFUR	9/75

TABLE 11
SUMMARY OF OPERATIONAL FGD SYSTEMS AS OF 12/76

UTILITY COMPANY POWER STATION	NEW OR RETROFIT	SIZE OF FGD UNIT (MW)	PROCESS/VENDOR	FUEL CHARACTERISTICS	MO/YR
KEY WEST UTILITY BOARD STOCK ISLAND PLANT	N	37	ZURN AIR SYSTEMS LIMESTONE SCRUBBING	OIL 2.4 PERCENT SULFUR	10/72
LOUISVILLE GAS & ELECTRIC PADDYS RUN NO 6	R	65	COMBUSTION ENGINEERING LIME SCRUBBING	COAL 3.5-4.0 PERCENT SULFUR	4/73
LOUISVILLE GAS & ELECTRIC CANE RUN NO 4	R	178	AMERICAN AIR FILTER LIME SCRUBBING	COAL 3.5 - 4.0 PERCENT SULFUR	8/76
MONTANA POWER CO. COLSTRIP NO 1	N	360	ADL/COMBUSTION EQUIP ASSOCIATE LIME/ALKALINE FLYASH SCRUBBING	COAL 0.8 PERCENT SULFUR	10/75
MONTANA POWER CO. COLSTRIP NO 2	N	360	ADL/COMBUSTION EQUIP ASSOCIATE LIME/ALKALINE FLYASH SCRUBBING	COAL 0.8 PERCENT SULFUR	7/76
NEVADA POWER REID GARDNER NO 1	R	125	ADL/COMBUSTION EQUIP ASSOCIATE SODIUM CARBONATE SCRUBBING	COAL 0.5- 1.0 PERCENT SULFUR	4/74
NEVADA POWER REID GARDNER NO 2	R	125	ADL/COMBUSTION EQUIP ASSOCIATE SODIUM CARBONATE SCRUBBING	COAL 0.5- 1.0 PERCENT SULFUR	4/74
NEVADA POWER REID GARDNER NO 3	N	125	ADL/COMBUSTION EQUIP ASSOCIATE SODIUM CARBONATE SCRUBBING	COAL 0.5- 1.0 PERCENT SULFUR	7/76
NORTHERN STATES POWER CO. SHERBURNE COUNTY STATION NO.1	N	710	COMBUSTION ENGINEERING LIMESTONE SCRUBBING	COAL 0.8 PERCENT SULFUR	3/76
PENNSYLVANIA POWER CO. BRUCE MANSFIELD NO. 1	N	835	CHEMICO LIME SCRUBBING	COAL 4.7 PERCENT SULFUR	4/76
PHILADELPHIA ELECTRIC CO. EDDYSTONE NO 1A	R	120	UNITED ENGINEERS / PECO MAGNESIUM OXIDE SCRUBBING	COAL 2.5 PERCENT SULFUR	9/75
PUBLIC SERVICE CO OF COLORADO VALMONT NO. 5	R	50	UOP / PUB SERVICE OF COLORADO LIMESTONE SCRUBBING	COAL 0.72 PERCENT SULFUR	10/74
RICKENBACKER AFB RICKENBACKER	R	20	RESEARCH COTTRELL LIME SCRUBBING	COAL 3.6 PERCENT SULFUR	3/76
TENNESSEE VALLEY AUTHORITY SHAWNEE NO.10B	R	10	CHEMICO LIME/LIMESTONE SCRUBBING	COAL 2.9 PERCENT SULFUR	4/72
TENNESSEE VALLEY AUTHORITY SHAWNEE NO.10A	R	10	UNIVERSAL OIL PRODUCTS LIME/LIMESTONE SCRUBBING	COAL 2.9 PERCENT SULFUR	4/72

TABLE 12

SUMMARY OF FGD SYSTEMS UNDER CONSTRUCTION

TABLE 12
SUMMARY OF FGD SYSTEMS UNDER CONSTRUCTION AS OF 12/76

UTILITY COMPANY POWER STATION	NEW OR RETROFIT	SIZE OF FGD UNIT (MW)	PROCESS/VENDOR	FUEL CHARACTERISTICS	MO/YR
ALABAMA ELECTRIC COOP TOMBIGBEE NO. 3	N	225	PEABODY ENGINEERING LIMESTONE SCRUBBING	COAL 0.8- 1.5 PERCENT SULFUR	3/79
ALABAMA ELECTRIC COOP TOMBIGBEE NO. 2	N	225	PEABODY ENGINEERING LIMESTONE SCRUBBING	COAL 0.8- 1.5 PERCENT SULFUR	3/78
ALLEGHENY POWER SYSTEM PLEASANTS NO. 2	N	625	BABCOCK AND WILCOX LIME SCRUBBING	COAL 4.5 PERCENT SULFUR (MAX)	3/80
ALLEGHENY POWER SYSTEM PLEASANTS NO. 1	N	625	BABCOCK AND WILCOX LIME SCRUBBING	COAL 4.5 PERCENT SULFUR (MAX)	3/79
ARIZONA ELECTRIC POWER COOP APACHE NO 2	N	200	RESEARCH COTTRELL LIMESTONE SCRUBBING	COAL 0.5- 0.8 PERCENT SULFUR	6/78
ARIZONA ELECTRIC POWER COOP APACHE NO 3	N	200	RESEARCH COTTRELL LIMESTONE SCRUBBING	COAL 0.5- 0.8 PERCENT SULFUR	6/79
ARIZONA PUBLIC SERVICE CHOLLA NO 2	N	250	RESEARCH COTTRELL LIMESTONE SCRUBBING	COAL 0.44-1 PERCENT SULFUR	6/77
BIG RIVERS ELECTRIC COOP CORP. REID STEAM STATION NO. 2	N	250	AMERICAN AIR FILTER LIME SCRUBBING	COAL 3.5-4.0 PERCENT SULFUR	12/79
CENTRAL ILLINOIS LIGHT CO. DUCK CREEK NO. 1B	N	300	RILEY STOKER / ENVIRONEERING LIMESTONE SCRUBBING	COAL 2.5 - 3.0 PERCENT SULFUR	8/78
CENTRAL ILLINOIS PUBLIC SERV NEWTON NO.1	N	575	BUELL/ENVIROTECH DOUBLE ALKALI SCRUBBING	COAL 2.8-3.2 PERCENT SULFUR	7/78
COLUMBUS & SOUTHERN OHIO ELEC. CONESVILLE NO 5	N	400	UNIVERSAL OIL PRODUCTS LIME SCRUBBING	COAL 4.5 - 4.9 PERCENT SULFUR	2/77
INDIANAPOLIS POWER & LIGHT CO. PETERSBURG NO 3	N	530	UNIVERSAL OIL PRODUCTS LIMESTONE SCRUBBING	COAL 3.0-3.5 PERCENT SULFUR	9/77
KANSAS POWER & LIGHT JEFFERY NO. 1	N	680	COMBUSTION ENGINEERING LIMESTONE SCRUBBING	COAL 0.32 PERCENT SULFUR	6/78
KANSAS POWER & LIGHT JEFFERY NO. 2	N	680	COMBUSTION ENGINEERING LIMESTONE SCRUBBING	COAL 0.32 PERCENT SULFUR	6/79
LOUISVILLE GAS & ELECTRIC MILL CREEK NO 3	N	425	AMERICAN AIR FILTER LIME SCRUBBING	COAL 3.5- 4.0 PERCENT SULFUR	7/77

TABLE 12
SUMMARY OF FGD SYSTEMS UNDER CONSTRUCTION AS OF 12/76

UTILITY COMPANY POWER STATION	NEW OR RETROFIT	SIZE OF FGD UNIT (MW)	PROCESS/VENDOR	FUEL CHARACTERISTICS	MO/YR
LOUISVILLE GAS & ELECTRIC CANE RUN NO 5	R	183	COMBUSTION ENGINEERING LIME SCRUBBING	COAL 3.5 - 4.0 PERCENT SULFUR	12/77
MINNKOTA POWER COOPERATIVE MILTON R. YOUNG NO. 2	N	450	ADL/COMBUSTION EQUIP ASSOCIATE LIME/ALKALINE FLYASH SCRUBBING	LIGNITE - 6,500 BTU, 0.7% S	8/77
NORTHERN INDIANA PUBLIC SERVIC D.H. MITCHELL NO.11	R	115	DAVY POWERGAS/ALLIED CHEMICAL WELLMAN LORD/ALLIED CHEMICAL	COAL 3.2- 3.5 PERCENT SULFUR	0/77
NORTHERN STATES POWER CO. SHERBURNE COUNTY STATION NO.2	N	680	COMBUSTION ENGINEERING LIMESTONE SCRUBBING	COAL 0.8 PERCENT SULFUR	5/77
PENNSYLVANIA POWER CO. BRUCE MANSFIELD NO. 2	N	835	CHEMICO LIME SCRUBBING	COAL 4.7 PERCENT SULFUR	4/77
PUBLIC SERVICE CO OF NEW MEX. SAN JUAN NO. 1	N	375	DAVY POWERGAS/ALLIED CHEMICAL WELLMAN LORD/ALLIED CHEMICAL	COAL 0.8 PERCENT SULFUR	7/77
PUBLIC SERVICE CO OF NEW MEX. SAN JUAN NO. 2	R	340	DAVY POWERGAS/ALLIED CHEMICAL WELLMAN LORD/ALLIED CHEMICAL	COAL 0.8 PERCENT SULFUR	7/77
SOUTH CAROLINA PUBLIC SERVICE WINYAH NO. 2	N	280	BABCOCK & WILCOX LIMESTONE SCRUBBING	COAL 1.0 PERCENT SULFUR	5/77
SOUTHERN MISSISSIPPI ELECTRIC R.D. MORROW NO.1	N	180	RILEY STOKER / ENVIRONEERING LIMESTONE SCRUBBING	COAL 1.0 PERCENT SULFUR	11/77
SOUTHERN MISSISSIPPI ELECTRIC R.D. MORROW NO.2	N	180	RILEY STOKER / ENVIRONEERING LIMESTONE SCRUBBING	COAL 1.0 PERCENT SULFUR	6/78
SPRINGFIELD CITY UTILITIES SOUTHWEST NO. 1	N	200	UNIVERSAL OIL PRODUCTS LIMESTONE SCRUBBING	COAL 3.5 PERCENT SULFUR	2/77
TENNESSEE VALLEY AUTHORITY WIDOWS CREEK NO 8	R	550	TENNESSEE VALLEY AUTHORITY LIMESTONE SCRUBBING	COAL 3.7 PERCENT SULFUR	3/77
TEXAS UTILITIES CO. MARTIN LAKE NO. 1	N	793	RESEARCH COTTRELL LIMESTONE SCRUBBING	COAL 1.0 PERCENT SULFUR	1/77
TEXAS UTILITIES CO. MARTIN LAKE NO. 2	N	793	RESEARCH COTTRELL LIMESTONE SCRUBBING	COAL 1.0 PERCENT SULFUR	10/77
TEXAS UTILITIES CO. MONTICELLO NO.3	N	750	CHEMICO LIMESTONE SCRUBBING	LIGNITE 1.0 PERCENT SULFUR	10/77

TABLE 12
SUMMARY OF FGD SYSTEMS UNDER CONSTRUCTION AS OF 12/76

UTILITY COMPANY POWER STATION	NEW OR RETROFIT	SIZE OF FGD UNIT (MW)	PROCESS/VENDOR	FUEL CHARACTERISTICS	MO/YR
UTAH POWER & LIGHT CO. HUNTINGTON NO.1	N	415	CHEMICO LIME SCRUBBING	COAL 0.5 PERCENT SULFUR	6/77

TABLE 13

SUMMARY OF PLANNED FGD SYSTEMS

TABLE 13
SUMMARY OF PLANNED FGD SYSTEMS AS OF 12/76

UTILITY COMPANY POWER STATION	NEW OR RETROFIT	SIZE OF FGD UNIT (MW)	VENDOR/PROCESS	FUEL CHARACTERISTICS	MO/YR
CONTRACTS AWARDED					
BASIN ELECTRIC POWER COOP MISSOURI BASIN NO 2	N	550	RESEARCH COTTRELL LIMESTONE SCRUBBING	COAL	10/80
COLUMBUS & SOUTHERN OHIO ELEC. CONESVILLE NO 6	N	400	UNIVERSAL OIL PRODUCTS LIME SCRUBBING	COAL 4.5 - 4.9 PERCENT SULFUR	1/78
PENNSYLVANIA POWER CO. BRUCE MANSFIELD NO. 3	N	835	PULLMAN KELLOGG LIME SCRUBBING	COAL 4.7 PERCENT SULFUR	4/79
BASIN ELECTRIC POWER COOP MISSOURI BASIN NO 1	N	550	RESEARCH COTTRELL LIMESTONE SCRUBBING	LIGNITE 0.8 PERCENT SULFUR	4/80
PACIFIC POWER AND LIGHT CO. JIM BRIDGER NO. 4	N	509	UNIVERSAL OIL PRODUCTS SODIUM CARBONATE SCRUBBING	COAL 0.56 PERCENT SULFUR(AVG.)	9/79
MONTANA POWER CO. COLSTRIP NO.4	N	700	ADL/COMBUSTION EQUIP ASSOCIATE LIME/ALKALINE FLYASH SCRUBBING	COAL 0.7 PERCENT SULFUR	7/81
MONTANA POWER CO. COLSTRIP NO.3	N	700	ADL/COMBUSTION EQUIP ASSOCIATE LIME/ALKALINE FLYASH SCRUBBING	COAL 0.7 PERCENT SULFUR	7/80
LOUISVILLE GAS & ELECTRIC CANE RUN NO 6	R	277	ADL/COMBUSTION EQUIP ASSOCIATE DOUBLE ALKALI SCRUBBING	COAL 3.5 - 4.0 PERCENT SULFUR	2/79
BRAZOS ELECTRIC POWER COOP ATACOSA MCMULLEN NO. 1	N	400	BABCOCK & WILCOX LIMESTONE SCRUBBING	LIGNITE 1.67 PERCENT SULFUR	12/79
COMMONWEALTH EDISON POWERTON NO. 51	R	425	UNIVERSAL OIL PRODUCTS LIMESTONE SCRUBBING	COAL 3.6 PERCENT SULFUR	12/79
LOUISVILLE GAS & ELECTRIC MILL CREEK NO 4	N	425	AMERICAN AIR FILTER LIME SCRUBBING	COAL 3.5- 4.0 PERCENT SULFUR	7/79
TEXAS UTILITIES CO. MARTIN LAKE NO. 4	N	793	RESEARCH COTTRELL LIMESTONE SCRUBBING	COAL 1.0 PERCENT SULFUR	12/79
UTAH POWER & LIGHT CO. EMERY NO.1	N	400	CHEMICO LIME SCRUBBING	COAL 0.5 PERCENT SULFUR	6/78
SOUTHERN INDIANA GAS&ELECTRIC A.B. BROWN NO.1	N	250	FMC CORPORATION DOUBLE ALKALI SCRUBBING	COAL 3.75 PERCENT SULFUR	4/79
SOUTHERN ILLINOIS POWER COOP SOUTHERN ILLINOIS POWER PT. 4	N	184	BABCOCK & WILCOX LIMESTONE SCRUBBING	COAL	1/78

TABLE 13
SUMMARY OF PLANNED FGD SYSTEMS AS OF 12/76

UTILITY COMPANY POWER STATION	NEW OR RETROFIT	SIZE OF FGD UNIT (MW)	VENDOR/PROCESS	FUEL CHARACTERISTICS	MO/YR
UNITED POWER ASSOCIATION COAL CREEK NO. 2	N	545	COMBUSTION ENGINEERING LIME SCRUBBING	LIGNITE - 0.63 PERCENT SULFUR	11/79
UNITED POWER ASSOCIATION COAL CREEK NO. 1	N	545	COMBUSTION ENGINEERING LIME SCRUBBING	LIGNITE - 0.63 PERCENT SULFUR	11/78
SALT RIVER PROJECT CORONADO NO.2	N	350	PULLMAN KELLOGG LIMESTONE SCRUBBING	COAL 1.0 PERCENT SULFUR (MAX)	4/80
SALT RIVER PROJECT CORONADO NO.1	N	350	PULLMAN KELLOGG LIMESTONE SCRUBBING	COAL 1.0 PERCENT SULFUR (MAX)	4/79
TEXAS UTILITIES CO. MARTIN LAKE NO. 3	N	793	RESEARCH COTTRELL LIMESTONE SCRUBBING	COAL 1.0 PERCENT SULFUR	12/78
LETTER OF INTENT SIGNED					
NEVADA POWER REID GARDNER NO 4	N	125	ADL/COMBUSTION EQUIP ASSOCIATE SODIUM CARBONATE SCRUBBING	COAL 0-5- 1.0 PERCENT SULFUR	0/ 0
PHILADELPHIA ELECTRIC CO. EDDYSTONE NO 1B	R	240	UNITED ENGINEERS / PECO MAGNESIUM OXIDE SCRUBBING	COAL 2.5 PERCENT SULFUR	6/80
REQUESTING/EVALUATING BIDS					
MINNESOTA POWER AND LIGHT CO. CLAY BOSWELL STATION NO.4	N	500	NOT SELECTED NOT SELECTED	COAL 0.8 PERCENT SULFUR	0/80
PUBLIC SERVICE OF INDIANA GIBSON NO. 4	N	650	NOT SELECTED NOT SELECTED	COAL 3.3 PERCENT SULFUR	0/79
PUBLIC SERVICE OF INDIANA GIBSON NO. 3	N	650	NOT SELECTED NOT SELECTED	COAL 3.3 PERCENT SULFUR	0/78
WISCONSIN POWER & LIGHT CO. COLUMBIA NO. 2	N	527	NOT SELECTED LIME/LIMESTONE SCRUBBING	COAL 0.8 PERCENT SULFUR	1/80
CONSIDERING FGD SYSTEM					
NEVADA POWER WARNER VALLEY STATION NO. 1	N	250	NOT SELECTED NOT SELECTED	COAL	6/82
NEVADA POWER HARRY ALLEN STATION NO. 2	N	500	NOT SELECTED NOT SELECTED	COAL	6/84

TABLE 13
SUMMARY OF PLANNED FGD SYSTEMS AS OF 12/76

UTILITY COMPANY POWER STATION	NEW OR RETROFIT	SIZE OF FGD UNIT (MW)	VENDOR/PROCESS	FUEL CHARACTERISTICS	MO/YR
NEVADA POWER HARRY ALLEN STATION NO. 3	N	500	NOT SELECTED NOT SELECTED	COAL	6/85
BASIN ELECTRIC POWER COOP MISSOURI BASIN NO 3	N	550	NOT SELECTED NOT SELECTED	COAL	6/83
BASIN ELECTRIC POWER COOP ANTELOPE VALLEY NO. 1	N	450	NOT SELECTED NOT SELECTED	LIGNITE 1.0 PERCENT SULFUR	0/81
BASIN ELECTRIC POWER COOP ANTELOPE VALLEY NO. 2	N	450	NOT SELECTED NOT SELECTED	LIGNITE 1.0 PERCENT SULFUR	0/84
LOUISVILLE GAS & ELECTRIC MILL CREEK NO 1	R	330	NOT SELECTED LIME SCRUBBING	COAL 3.5- 4.0 PERCENT SULFUR	1/82
LOUISVILLE GAS & ELECTRIC MILL CREEK NO 2	R	330	NOT SELECTED LIME SCRUBBING	COAL 3.5- 4.0 PERCENT SULFUR	1/81
PHILADELPHIA ELECTRIC CO. CROMBY	R	150	UNITED ENGINEERS / PECO MAGNESIUM OXIDE SCRUBBING	COAL 2-4 PERCENT SULFUR	6/80
CENTRAL ILLINOIS LIGHT CO. DUCK CREEK NO.2	N	400	NOT SELECTED LIMESTONE SCRUBBING	COAL 2.5-3.0 PERCENT SULFUR	1/82
CINCINNATI GAS & ELECTRIC CO. EAST BEND NO 2	N	600	NOT SELECTED NOT SELECTED	COAL	1/81
COLORADO UTE ELECTRICAL ASSN. CRAIG STATION NO.1	N	450	NOT SELECTED LIME/LIMESTONE SCRUBBING	COAL 0.45 PERCENT SULFUR	3/79
COLORADO UTE ELECTRICAL ASSN. CRAIG STATION NO.2	N	450	NOT SELECTED LIME/LIMESTONE SCRUBBING	COAL 0.45 PERCENT SULFUR	3/79
COLUMBUS & SOUTHERN OHIO ELEC. POSTON NO. 6	N	375	NOT SELECTED NOT SELECTED	COAL 2.5 PERCENT SULFUR	0/83
INDIANAPOLIS POWER & LIGHT CO. PETERSBURG NO 4	N	530	NOT SELECTED LIMESTONE SCRUBBING	COAL 3.5 PERCENT SULFUR	4/82
COLUMBUS & SOUTHERN OHIO ELEC. POSTON NO. 5	N	375	NOT SELECTED NOT SELECTED	COAL 2.5 PERCENT SULFUR	0/81
EASTERN KENTUCKY POWER COOP SPURLOCK GENERATING PLANT NO.2	N	500	NOT SELECTED NOT SELECTED	COAL	3/80
NEVADA POWER HARRY ALLEN STATION NO. 1	N	500	NOT SELECTED NOT SELECTED	COAL	6/83

TABLE 13
SUMMARY OF PLANNED FGD SYSTEMS AS OF 12/76

UTILITY COMPANY POWER STATION	NEW OR RETROFIT	SIZE OF FGD UNIT (MW)	VENDOR/PROCESS	FUEL CHARACTERISTICS	MO/YR
NEVADA POWER WARNER VALLEY STATION NO. 2	N	250	NOT SELECTED NOT SELECTED	COAL	6/83
PHILADELPHIA ELECTRIC CO. EDDYSTONE NO. 2	R	336	UNITED ENGINEERS / PECO MAGNESIUM OXIDE SCRUBBING	COAL 2.4 PERCENT SULFUR	6/80
OTTER TAIL POWER COMPANY COYOTE STATION NO.1	N	400	NOT SELECTED NOT SELECTED	LIGNITE 0.9 PERCENT SULFUR	0/81
ARIZONA PUBLIC SERVICE FOUR CORNERS NO. 4	R	755	NOT SELECTED NOT SELECTED	COAL 0.7 - 0.75% SULFUR (AVG)	0/ 0
NORTHERN STATES POWER CO. SHERBURNE COUNTY STATION NO.3	N	860	NOT SELECTED NOT SELECTED	COAL 0.8 PERCENT SULFUR	5/81
NORTHERN STATES POWER CO. SHERBURNE COUNTY STATION NO.4	N	860	NOT SELECTED NOT SELECTED	COAL 0.8 PERCENT SULFUR	5/83
ARIZONA PUBLIC SERVICE FOUR CORNERS NO. 5B	R	595	NOT SELECTED NOT SELECTED	COAL 0.7 - 0.75% SULFUR (AVG)	0/ 0
NORTHERN INDIANA PUB SERVICE BAILLY NO. 7	R	190	NOT SELECTED NOT SELECTED	COAL 3 PERCENT SULFUR	0/ 0
NORTHERN INDIANA PUB SERVICE BAILLY NO. 8	R	400	NOT SELECTED NOT SELECTED	COAL 3 PERCENT SULFUR	0/ 0
NIAGARA MOHAWK POWER COOP. CHARLES R. HUNTLEY NO. 6	R	100	ATOMICS INTERNATIONAL AQUEOUS CARBONATE SCRUBBING	COAL 2.5-4.5 PERCENT SULFUR	6/78
NEW ENGLAND ELEC SYSTEM BRAYTON POINT NO.3	R	650	NOT SELECTED REGENERABLE NOT SELECTED	COAL 3.0 PERCENT SULFUR	0/ 0
NEVADA POWER HARRY ALLEN STATION NO. 4	N	500	NOT SELECTED NOT SELECTED	COAL	6/86
SOUTHERN CALIFORNIA EDISON MOHAVE NO 1B	R	620	NOT SELECTED LIME/LIMESTONE SCRUBBING	COAL 0.5- 0.8 PERCENT SULFUR	6/77
SOUTHERN CALIFORNIA EDISON MOHAVE NO. 2	R	790	NOT SELECTED LIME/LIMESTONE SCRUBBING	COAL 0.5 TO 0.8 % SULFUR	6/77
SALT RIVER PROJECT CORONADO NO.3	N	350	NOT SELECTED LIMESTONE SCRUBBING	COAL 1.0 PERCENT SULFUR(MAY)	0/87
POTOMAC ELECTRIC & POWER DICKERSON NO.1	R	190	CHEMICO NOT SELECTED	COAL	0/78

TABLE 13
SUMMARY OF PLANNED FGD SYSTEMS AS OF 12/76

UTILITY COMPANY POWER STATION	NEW OR RETROFIT	SIZE OF FGD UNIT (MW)	VENDOR/PROCESS	FUEL CHARACTERISTICS	MO/YR
POTOMAC ELECTRIC & POWER DICKERSON NO.2	R	190	CHEMICO NOT SELECTED	COAL	0/78
PUBLIC SERVICE CO OF NEW MEX. SAN JUAN NO. 4	N	500	NOT SELECTED REGENERABLE NOT SELECTED	COAL 0.8 PERCENT SULFUR	5/81
PUBLIC SERVICE CO OF NEW MEX. SAN JUAN NO. 3	N	500	NOT SELECTED REGENERABLE NOT SELECTED	COAL 0.8 PERCENT SULFUR	5/81

TABLE 14

SUMMARY LIST OF FGD SYSTEMS IN THE EARLY PLANNING STAGES

TABLE 14
SUMMARY LIST OF FGD SYSTEMS IN THE EARLY PLANNING STAGES

FGD STATUS REPORT 12/76

I.D. NUMBER	AND COMPANY NAME	UNIT NAME	LOCATION	START UP DATE	STATUS	REG CLASS
1	GENERAL PUBLIC UTILITIES	COHO NO.1	ERIE PENNSYLVANIA	5-87	7	A
2	GENERAL PUBLIC UTILITIES	SEWARD NO.7	SEWARD PENNSYLVANIA	5-84	7	A
3	GULF POWER CO.	CRIST NO. 4 AND NO. 5	PENSACOLA FLORIDA	0-78	7	B
4	GULF POWER CO.	CRIST NO. 6 AND NO. 7	PENSACOLA FLORIDA	0-80	7	B
5	GULF POWER CO.	LANSING SMITH NO. 1 AND NO. 2	PANAMA CITY FLORIDA	0-80	7	B
6	KENTUCKY UTILITIES	GHENT NO. 2	GHENT KENTUCKY	0- 0	7	E
7	POTOMAC ELECTRIC & POWER	CHALK POINT NO. 4	PRINCE GEORGE COUNTY MARYLAND	0-80	7	D
8	POTOMAC ELECTRIC & POWER	DICKERSON NO 4	DICKERSON MARYLAND	5-82	7	D
9	POWER AUTHORITY OF NEW YORK	ARTHUR KILL	STATEN ISLAND NEW YORK	9-82	7	B
10	SALT RIVER PROJECT	NAVAJO NO 1	PAGE ARIZONA	0- 0	7	D
11	SALT RIVER PROJECT	NAVAJO NO 2	PAGE ARIZONA	0- 0	7	D
12	SALT RIVER PROJECT	NAVAJO NO 3	PAGE ARIZONA	0- 0	7	D
13	SPRINGFIELD WATER LIGHT POWER	DALLMAN NO 3	SPRINGFIELD ILLINOIS	6-79	7	A
14	TEXAS POWER AND LIGHT CO.	TWIN OAKS NO. 1	ROBERTSON COUNTY TEXAS	8-80	7	A
15	TEXAS POWER AND LIGHT CO.	TWIN OAKS NO. 2	ROBERTSON COUNTY TEXAS	9-81	7	A
16	VIRGINIA ELECTRIC AND POWER CO	MT. STORM	MT. STORM WEST VIRGINIA	0- 0	7	C

7. CONSIDERING FGD SYSTEM AS WELL AS ALTERNATIVE METHODS

A. BOILER CONSTRUCTED SUBJECT TO FEDERAL NSPS
B. BOILER SUBJECT TO STATE STANDARD THAT IS MORE STRINGENT THAN THE FEDERAL NSPS
C. BOILER SUBJECT TO STATE STANDARD THAT IS EQUAL TO OR LESS STRINGENT THAN NSPS
D. OTHER
E. REGULATORY CLASS UNKNOWN

TABLE 15

STATUS OF FGD SYSTEMS IN THE EARLY PLANNING STAGES

TABLE 15

STATUS OF FGD SYSTEMS IN THE EARLY PLANNING STAGES DURING 12/76

COMPANY / POWER STATION	CURRENT MONTH
I.D. NUMBER 1 GENERAL PUBLIC UTILITIES COHO NO.1 800 MW - NEW COAL NOT SELECTED NOT SELECTED STARTUP 5/87	STARTUP DATE CHANGED TO 5/87 FOR BOTH BOILER AND FGD SYSTEM. LIME, LIMESTONE SCRUBBING, AND COAL DESULFURIZATION ARE THE PRIMARY PROCESSES BEING CONSIDERED. NO DECISION HAS BEEN MADE YET.
I.D. NUMBER 2 GENERAL PUBLIC UTILITIES SEWARD NO.7 800 MW - NEW COAL NOT SELECTED NOT SELECTED STARTUP 5/84	STARTUP DATE CHANGED TO 5/84 FOR BOTH BOILER AND FGD SYSTEM. LIME, LIMESTONE SCRUBBING, AND COAL DESULFURIZATION ARE THE PRIMARY PROCESSES BEING CONSIDERED. NO DECISION HAS BEEN MADE YET.
I.D. NUMBER 3 GULF POWER CO. CRIST NO. 4 AND NO. 5 150 MW - RETROFIT NOT SELECTED NOT SELECTED STARTUP 0/78	EACH UNIT IS 75 MW. IF SCRUBBERS ARE SELECTED THEY WILL BE REQUIRED IN 1978.
I.D. NUMBER 4 GULF POWER CO. CRIST NO. 6 AND NO. 7 820 MW - RETROFIT NOT SELECTED NOT SELECTED STARTUP 0/80	UNIT 6 IS 320 MW. UNIT 7 IS 500 MW.
I.D. NUMBER 5 GULF POWER CO. LANSING SMITH NO. 1 AND NO. 2 305 MW - RETROFIT COAL NOT SELECTED NOT SELECTED STARTUP 0/80	UNIT NO. 1 IS 125 MW. UNIT NO. 2 IS 180 MW. IF SCRUBBERS ARE SELECTED, THEY WILL BE REQUIRED IN 1979 AND 1980 ON THE RESPECTIVE UNITS.

TABLE 15

STATUS OF FGD SYSTEMS IN THE EARLY PLANNING STAGES DURING 12/76

COMPANY POWER STATION	CURRENT MONTH
I.D. NUMBER 6 KENTUCKY UTILITIES GHENT NO. 2 510 MW - NEW COAL 3.0 PERCENT SULFUR NOT SELECTED LIME SCRUBBING STARTUP 0/ 0	THIS NEW COAL-FIRED POWER BOILER WAS SUPPLIED BY COMBUSTION ENGINEERING AND IS SCHEDULED TO COMMENCE COMMERCIAL OPERATION IN JANUARY 1977. THE UTILITY ALSO HAS AN EXISTING 510-MW COAL-FIRED UNIT INSTALLED AT THIS STATION AND IS PRESENTLY EVALUATING PLANS TO INSTALL A SCRUBBER ON ONE OF THESE TWO UNITS.
I.D. NUMBER 7 POTOMAC ELECTRIC & POWER CHALK POINT NO. 4 630 MW - NEW OIL NOT SELECTED NOT SELECTED STARTUP 0/80	AWAITING PERFORMANCE RESULTS FROM MGO UNIT ON DICKERSON NO. 3 (MONTGOMERY COUNTY). UNIT WILL HAVE PEABODY-LURGI 2-STAGE VENTURI SCRUBBERS FOR PARTICULATE CONTROL. COMPANY MAY ELECT NOT TO INSTALL FGD SYSTEM IF USE OF LOW SULFUR OIL IS CONTINUED.
I.D. NUMBER 8 POTOMAC ELECTRIC & POWER DICKERSON NO 4 800 MW - NEW COAL 2.0 PERCENT SULFUR NOT SELECTED NOT SELECTED STARTUP 5/82	THERE ARE NO FIRM PLANS FOR INSTALLATION OF FGD SYSTEM. STARTUP DATE OF BOILER IS PLANNED FOR 1982.
I.D. NUMBER 9 POWER AUTHORITY OF NEW YORK ARTHUR KILL 700 MW - NEW COAL - 3% SULFUR - REFUSE NOT SELECTED NOT SELECTED STARTUP 9/82	THE UTILITY IS CONSIDERING BOTH REGENERABLE AND LIMESTONE SCRUBBING PROCESSES. FGD TECHNOLOGY IS BEING CONSIDERED FOR A FOSSIL FUEL BURNING UNIT WHICH WILL EMPLOY COAL AS THE PRIMARY FUEL AND OIL AS BACKUP. REFUSE WILL BE PROVIDED FOR SUPPLEMENTAL FUEL SUPPLIES. THE PREFERRED PLANT SITE IS THE ARTHUR KILL FACILITY LOCATED ON STATEN ISLAND. THE PROJECT DESIGN ENGINEERING FIRM IS SARGENT AND LUNDY.
I.D. NUMBER 10 SALT RIVER PROJECT NAVAJO NO 1 750 MW - RETROFIT COAL 0.45 PERCENT SULFUR NOT SELECTED LIME/LIMESTONE SCRUBBING STARTUP 0/ 0	THE UTILITY IS PRESENTLY INVESTIGATING THE USE OF LOW SULFUR COAL AND DESULFURIZATION PROCESSES. A DEFINITIVE DECISION WILL BE MADE PENDING COMPLETION OF THE SRP/EPA STUDY. NO SPECIFIC STARTUP DATE HAS YET BEEN SPECIFIED.

TABLE 15

COMPANY — STATUS OF FGD SYSTEMS IN THE EARLY PLANNING STAGES DURING 12/76

POWER STATION	CURRENT MONTH
I.D. NUMBER 11 SALT RIVER PROJECT NAVAJO NO 2 750 MW - RETROFIT COAL 0.45 PERCENT SULFUR NOT SELECTED LIME/LIMESTONE SCRUBBING STARTUP 0/ 0	THE UTILITY IS PRESENTLY INVESTIGATING THE USE OF LOW SULFUR COAL AND DESULFURIZATION PROCESSES. A DEFINITIVE DECISION WILL BE MADE PENDING COMPLETION OF THE SRP/EPA STUDY. NO SPECIFIC STARTUP DATE HAS YET BEEN SPECIFIED.
I.D. NUMBER 12 SALT RIVER PROJECT NAVAJO NO 3 750 MW - RETROFIT COAL 0.45 PERCENT SULFUR NOT SELECTED LIME/LIMESTONE SCRUBBING STARTUP 0/ 0	THE UTILITY IS PRESENTLY INVESTIGATING THE USE OF LOW SULFUR COAL AND DESULFURIZATION PROCESSES. A DEFINITIVE DECISION WILL BE MADE PENDING COMPLETION OF THE SRP/EPA STUDY. NO SPECIFIC STARTUP DATE HAS YET BEEN SPECIFIED.
I.D. NUMBER 13 SPRINGFIELD WATER LIGHT POWER DALLMAN NO 3 190 MW - NEW COAL 3.0- 4.3 PERCENT SULFUR NOT SELECTED NOT SELECTED STARTUP 6/79	FGD SYSTEM IS UNDER CONSIDERATION WITH BOTH REGENERABLE AND LIMESTONE SCRUBBING BEING CONSIDERED. BECAUSE OF SPACE LIMITATIONS A REGENERABLE SYSTEM IS THE LIKELY CHOICE. THE COMPANY IS ALSO CONSIDERING COMPLIANCE THROUGH BURNING OF LOW SULFUR WESTERN COAL.
I.D. NUMBER 14 TEXAS POWER AND LIGHT CO. TWIN OAKS NO. 1 750 MW - NEW LIGNITE NOT SELECTED NOT SELECTED STARTUP 8/80	THIS UNIT WILL BE JOINTLY OWNED BY TP&L AND ALCOA. A FIRM DECISION HAS NOT BEEN MADE WHETHER TO INSTALL FGD FACILITIES.
I.D. NUMBER 15 TEXAS POWER AND LIGHT CO. TWIN OAKS NO. 2 750 MW - NEW LIGNITE NOT SELECTED NOT SELECTED STARTUP 9/81	THIS UNIT WILL BE JOINTLY OWNED BY TP&L AND ALCOA. A FIRM DECISION HAS NOT BEEN MADE WHETHER TO INSTALL FGD FACILITIES.

TABLE 15

COMPANY STATUS OF FGD SYSTEMS IN THE EARLY PLANNING STAGES DURING 12/76

POWER STATION	CURRENT MONTH
I.D. NUMBER 16 VIRGINIA ELECTRIC AND POWER CO MT. STORM 1147 MW - RETROFIT COAL NOT SELECTED NOT SELECTED STARTUP 0/ 0	THE UTILITY IS PRESENTLY CONSIDERENG BOTH DESULFURIZATION AND THE USE OF LOW SULFUR COAL. A DESULFURIZATION SYSTEM WOULD TREAT 69 PERCENT OF THE FLUE GAS FROM THREE BOILERS. CONSTRUCTION AND STARTUP DATES ARE CONSIDERED INDEFINITE AT THIS TIME.

APPENDIX A

FGD SYSTEM OPERATIONS THAT HAVE BEEN TERMINATED OR SHUT DOWN INDEFINITELY

APPENDIX A
TERMINATED OPERATIONAL FGD SYSTEMS

IDENTIFICATION NO.	1
UTILITY NAME	BOSTON EDISON
UNIT NAME	MYSTIC NO 6
UNIT LOCATION	EVERETT MASSACHUSETTS
UNIT RATING	150 MW
FUEL CHARACTERISTICS	OIL 2.5 PERCENT SULFUR
FGD VENDOR	CHEMICO
PROCESS	MAGNESIUM OXIDE SCRUBBING
NEW OR RETROFIT	RETROFIT
START UP DATE	4/72
FGD STATUS	TERMINATED
EFFICIENCY, PARTICULATES	50 PERCENT
SO2	90 PERCENT
WATER MAKE UP	
SLUDGE DISPOSAL	ACID PLANT REGENERATION
UNIT COST	$32/KW CAPITAL + CALCINATION
OPERATIONAL EXPERIENCE	AVERAGE FGD SYSTEM AVAILABILITY FACTORS - APRIL 72 TO MAY 73, 17%. JUNE 73 TO DEC. 73, 48%. JAN. 74 TO JUNE 74, 60%. JUNE 74, 80%. THE FGD SYSTEM HAS BEEN SHUT DOWN INDEFINITELY SINCE JUNE 74.

BACKGROUND INFORMATION

ON

THE MYSTIC POWER STATION, UNIT NO. 6

THE MAGNESIUM OXIDE-BASED FGD SYSTEM INSTALLED AT THE MYSTIC POWER STATION OF THE BOSTON EDISON COMPANY CONSISTS OF A CHEMICO-DESIGNED SINGLE-STAGE VENTURI SCRUBBER MODULE. THE MODULE IS CONSTRUCTED OF CARBON STEEL LINED WITH A SPRAY-APPLIED POLYESTER MATERIAL. TOTAL FLUE GAS CAPACITY OF THE SYSTEM IS 440,000 ACFM AT 300°F. MAXIMUM DESIGN SULFUR DIOXIDE CONCENTRATION AND REMOVAL EFFICIENCY IS 1500 PPM AND 90 PERCENT RESPECTIVELY.

THIS EXPERIMENTAL MAGNESIUM OXIDE SCRUBBING UNIT IS RETROFITTED ON A 155-MW, OIL-FIRED STEAM-GENERATING BOILER MANUFACTURED BY COMBUSTION ENGINEERING. THIS BOILER FIRES NO. 6 RESIDUAL FUEL OIL WITH THE FOLLOWING AVERAGE CHARACTERISTICS: HEAT CONTENT OF 149,000 BTU/GAL; ASH CONTENT OF 0.07 PERCENT; AND A SULFUR CONTENT OF 2.0 PERCENT. THE UNIT'S HEAT RATE IS APPROXIMATELY 9500 BTU/NET KWH.

SIMULTANEOUS REMOVAL OF SULFUR DIOXIDE AND PARTICULATES OCCURS IN THE VENTURI SCRUBBER MODULE. DESIGN REMOVAL EFFICIENCIES ARE 90 PERCENT AND 55 PERCENT RESPECTIVELY. SULFUR DIOXIDE REMOVAL FROM THE FLUE GAS OCCURS BY WET SCRUBBING WITH MAGNESIUM OXIDE SLURRY. THE SULFUR DIOXIDE IS CAPTURED AND CONVERTED TO MAGNESIUM SULFITE IN THE VENTURI. THIS PRODUCT SLURRY IS THEN FILTERED AND DRIED. THE DRY MATERIAL IS CALCINED AT HIGH TEMPERATURES TO DRIVE OFF THE SULFUR DIOXIDE AND REGENERATE MAGNESIUM OXIDE. THE SULFUR DIOXIDE STREAM IS PROCESSED IN A SULFURIC ACID PLANT TO MAKE 98 PERCENT GRADE OF SULFURIC ACID. A SCHEMATIC FLOW DIAGRAM OF THE SCRUBBING AND REGENERATION FACILITIES IS PRESENTED IN FIGURE 22,APPENDIX C.

THE UTILITY AND THE EPA PROVIDED THE MAJOR PORTION OF THE FUNDING FOR THIS REGENERABLE DEMONSTRATION PROJECT. EACH PARTY CONTRIBUTED APPROXIMATELY $4.5 MM TO THE PROJECT. BOSTON EDISON'S INVESTMENT HAS BEEN SPENT PRIMARILY ON CONSTRUCTION AND OPERATION OF THE SCRUBBER AND RELATED EQUIPMENT AT THE MYSTIC STATION. EPA'S INVESTMENT WAS PROVIDED PRIMARILY FOR THE REGENERATION FACILITIES AT ESSEX CHEMICAL'S SULFURIC ACID PLANT IN RUMFORD, RHODE ISLAND. THE SYSTEM SUPPLIER ALSO UNDERWROTE PART OF THE COSTS FOR FUTURE PROCESS DEVELOPMENT.

PROBLEMS AND SOLUTIONS

FROM THE INITIAL START-UP IN APRIL 1972 UNTIL MAY 1973 THE SCRUBBER OPERATED INTERMITTENTLY BECAUSE OF MECHANICAL DIFFICULTIES. THE MAJOR PROBLEM, ENTAILING DESIGN AND OPERATION OF THE MAGNESIUM SULFITE CRYSTAL DRYER, APPARENTLY HAS BEEN RESOLVED BY REDESIGN AND FUEL CHANGE. PROBLEMS WITH THE STACK AND PUMP OCCURRED DURING USE OF REGENERATED MAGNESIUM OXIDE. OVERHEATING OF THE SLURRY DURING ACTIVATION OF THE STEAM FREEZE PROTECTION SYSTEM CAUSED FORMATION OF SCALE IN THE MgO SLURRY PIPING. IN 1974, SYSTEM OPERATION WAS LIMITED BY BOILER AVAILABILITY. SINCE FEBRUARY 1974 AVAILABILITY OF THE BOILER HAS BEEN INCREASED. THE SYSTEM HAS BEEN SHUT DOWN INDEFINITELY SINCE JUNE 1974, WHEN EPA FUNDS FOR THE CALCINING PORTION OF THIS OPERATION WERE EXHAUSTED.

AVAILABILITY FACTORS AND COMMENTS CONCERNING THE OPERATION OF THIS SYSTEM SINCE STARTUP ARE PRESENTED IN THE FOLLOWING TABLE.

FGD SYSTEM AVAILABILITY

MYSTIC UNIT NO. 6

Month	Boiler Operation (hr)	Scrubber Operation (hr)	Operability (%)	Comments
Apr. 72 to May 73			17	The module operated intermittently because of mechanical difficulties. A major problem concerned the operation of the magnesium sulfite crystals dryer.
Jun. 73	592	402	68	The longest period of continuous operation, 7.5 days, occurred during June and July.
Jul. 73	575	351	61	
Aug. 73	Boiler shutdown			The boiler was down for the annual overhaul. System availability decreased during the last quarter of the year because of heavy erosion/corrosion in the liquor recirculation pumps and centrifuge.
Sep. 73	637	243	38	
Oct. 73	627	377	60	
Nov. 73	629	162	26	
Dec. 73	658	86	13	
Jan. 74	555	152	28	System availability was limited by boiler-related problems that caused frequent shutdowns in January and February.
Feb. 74	541	138	25	
Mar. 74	408	353	87	
Apr. 74	585	471	81	Two 7-day continuous operation periods occurred during the month.
May 74	488	280	57	The 57 percent operability index value for the month was due to a 2-weeks outage of the acid plant rather than to FGD system failure. Demonstration program was completed and FGD system was shut down. EPA funding of $MgSO_3$ calcination has expired. There are no definite plans for restarting of this unit. Major problem areas encountered during the operation of this prototype unit included trihydrate instead of hexahydrate sulfite crystal formation, dust problems in the dryer, lack of stack gas reheat causing condensation in the stack, louver damper problems, erosion of pumps, piping, and centrifuge, and minor ancillary equipment failures.
Jun. 74	559	288	80	

IDENTIFICATION NO.	2
UTILITY NAME	DAIRYLAND POWER COOP
UNIT NAME	ALMA STATION
UNIT LOCATION	ALMA WISCONSIN
UNIT RATING	80 MW
FUEL CHARACTERISTICS	COAL 3.0- 3.5 PERCENT SULFUR
FGD VENDOR	FOSTER WHEELER
PROCESS	LIME INJECTION
NEW OR RETROFIT	RETROFIT
START UP DATE	6/71
FGD STATUS	TERMINATED
EFFICIENCY, PARTICULATES	
SO2	25 PERCENT
WATER MAKE UP	
SLUDGE DISPOSAL	
UNIT COST	
OPERATIONAL EXPERIENCE	THIS EXPERIMENTAL WET LIME FURNACE INJECTION SYSTEM HAS BEEN OPERATIONAL SINCE 1971 FOR PERIODS UP TO 30 DAYS. IN AUGUST 1974 THE UNIT WAS TESTED FOR TWO DAYS USING WESTERN LOW SULFUR COAL. THE TEST SHOWED ABOUT 50% SO2 REMOVAL EFFICIENCY, BUT PRECIPITATOR PERFORMANCE WAS ADVERSELY AFFECTED. THE FGD PROJECT HAS BEEN SHUT DOWN INDEFINITELY SINCE AUGUST 1974, AND THERE ARE NO PLANS FOR FUTURE OPERATION.

TERMINATED OPERATIONAL FGD SYSTEMS

IDENTIFICATION NO.	3
UTILITY NAME	GULF POWER CO.
UNIT NAME	SCHOLZ NO. 1A
UNIT LOCATION	CHATTAHOOCHEE FLORIDA
UNIT RATING	20 MW
FUEL CHARACTERISTICS	COAL 3.0 PERCENT SULFUR
FGD VENDOR	ADL/COMBUSTION EQUIP ASSOCIATE
PROCESS	DOUBLE ALKALI SCRUBBING
NEW OR RETROFIT	RETROFIT
START UP DATE	2/75
FGD STATUS	TERMINATED
EFFICIENCY, PARTICULATES	99.7 PERCENT
SO2	95 PERCENT
WATER MAKE UP	CLOSED LOOP
SLUDGE DISPOSAL	UNSTABILIZED SLUDGE DISPOSED IN LINED POND
UNIT COST	
OPERATIONAL EXPERIENCE	REFER TO THE BACKGROUND INFORMATION SECTION IN APPENDIX A OF THIS REPORT. THIS PROTOTYPE SCRUBBING SYSTEM WAS INITIALLY PLACED IN SERVICE FEBRUARY 1975 AND WAS OPERATIONAL A TOTAL 4744 HOURS THROUGHOUT THE YEAR. THE SYSTEM OPERABILITY INDEX FOR THE MONTH OF JUNE WAS 93 PERCENT. THE DUAL ALKALI DEMONSTRATION PROGRAM AT PLANT SCHOLZ WAS TERMINATED ON JULY 2 FOLLOWING THE SUCCESSFUL COMPLETION OF THIS PROGRAM. PRESENT PLANS CALL FOR A FULL SCALE EPA-SPONSORED DEMONSTRATION PROGRAM WITH THE PROBABLE INSTALLATION SITE BEING LOUISVILLE GAS & ELECTRIC'S CANE RUN STATION.

BACKGROUND INFORMATION

ON

SCHOLZ NO. 1A - DOUBLE ALKALI

THE SCHOLZ STEAM POWER PLANT OF GULF POWER COMPANY IS LOCATED IN CHATTAHOOCHEE, FLORIDA. UNIT NO. 1 IS A COAL-FIRED STEAM BOILER DESIGNED AND INSTALLED BY BABCOCK AND WILCOX IN 1953. THIS UNIT IS NOMINALLY RATED AT 40 MW AND IS CAPABLE OF 47.5 MW MAXIMUM CAPACITY. THIS UNIT FIRES VARIOUS TYPES OF COAL FOR TEST PURPOSES. THE AVERAGE CHARACTERISTICS OF THE COAL BURNED IN THIS UNIT DURING THE FGD DEMONSTRATION PROGRAM ARE: HEAT CONTENT OF 12,400 BTU/LB; MAXIMUM SULFUR CONTENT OF 5 PERCENT; ASH CONTENT OF 14 PERCENT; AND A MAXIMUM CHLORIDE CONTENT OF 0.15 PERCENT.

A 20-MW PROTOTYPE DUAL ALKALI SYSTEM WAS JOINTLY DEVELOPED, DESIGNED, AND INSTALLED BY COMBUSTION EQUIPMENT ASSOCIATES AND ARTHUR D. LITTLE. THE PROTOTYPE SYSTEM AT THE SCHOLZ STEAM PLANT IS INSTALLED ON THE NO. 1 BOILER. THE SYSTEM IS DESIGNED TO HANDLE APPROXIMATELY 50 PERCENT OF THE FLUE GAS FROM THE BOILER. THE BOILER HAS BEEN RETROFITTED WITH A SECTIONALIZED, HIGH-EFFICIENCY ESP INSTALLED UPSTREAM OF THE FGD SYSTEM AND CAPABLE OF 99.7 PERCENT PARTICULATE REMOVAL. THE ESP CAN BE SELECTIVELY DE-ENERGIZED FOR STUDY OF PARTICULATE IMPACT ON THE FGD OPERATION.

THE PROTOTYPE UNIT INCORPORATES A HIGH DEGREE OF FLEXIBILITY FOR GENERATION OF DESIGN AND OPERATING INFORMATION FOR A WIDE VARIETY OF APPLICATIONS. ALTHOUGH THE BASIC MODE OF SYSTEM OPERATION IS DUAL ALKALI WITH LIME REGENERATION, THE SYSTEM WAS DESIGNED TO ACCOMMODATE LIMESTONE REGENERATION AND LIME/LIMESTONE REGENERATION. THE SYSTEM CONSISTS OF A VENTURI SCRUBBER AND AN ABSORPTION TOWER, WITH AN ADDITIONAL STORAGE SILO FOR LIMESTONE, A MIX TANK, AND OTHER ASSORTED TANKS, PUMPS, CONTROLLERS, PIPING, AND A LINED DISPOSAL POND.

THE PROTOTYPE SYSTEM WAS COMPLETED AND PUT IN OPERATION BY CEA/ADL IN EARLY FEBRUARY 1975. IN MID-MAY AN EPA DUAL ALKALI TEST PROGRAM WAS INITIATED BY SOUTHERN SERVICES, CEA, AND ADL. THE SYSTEM WAS OPERATIONAL THROUGH EARLY JANUARY 1976, WHEN THE BOILER WAS SHUT DOWN FOR A SCHEDULED OVERHAUL. THE BOILER AND PROTOTYPE SYSTEM WERE PLACED BACK IN SERVICE IN EARLY MARCH 1976. THE SYSTEM HAS OPERATED CONTINOUSLY DURING THIS PERIOD ON A HIGH SULFUR COAL (3.5 TO 4.5 PERCENT) APPLICATION, TREATING FLUE GAS WITH SULFUR DIOXIDE CONCENTRATIONS IN THE 2000 TO 2500 PPM RANGE. IN ADDITION, SYSTEM WAS TESTED OUT ON FLUE GAS OF VARYING PARTICULATE LOADING TO DETERMINE THE IMPACT OF FLY ASH OF SYSTEM OPERATIONS. THE PROTOTYPE PROGRAM WAS SUCCESSFULLY CONCLUDED ON JULY 3, 1976 AT 6 A.M. RESULTS OF THE PROGRAM ARE BEING PREPARED FOR PUBLICATION. THIS PROCESS IS NOW SCHEDULED FOR FULL SCALE DEMONSTRATION APPLICATION AT LOUISVILLE GAS AND ELECTRIC'S CANE RUN NO. 6 UNIT.

THE PERFORMANCE OF THE SCHOLZ PROTOTYPE UNIT AND COMMENTS ARE LISTED BELOW IN THE PERFORMANCE TABLE. A PROCESS FLOW DIAGRAM OF THE SCHOLZ PROTOTYPE FGD UNIT IS PROVIDED IN FIGURE 23 OF APPENDIX C.

Period	Total hours	Unit Operating Hours: Boiler	Unit Operating Hours: FGD system	FGD system operability	Performance (%) utilization	Comments
Feb. 75	672	459	454	99	68	Unit was placed in operation February 8, 1975, and operated until July 18 when it was shut down for 2 months modifications, repairs, and replacement of parts. The system was unavailable to the boiler for a 491-hour period because of adjustments and modifications required for the formal EPA test program in mid-May.
Mar. 75	744	507	485	96	65	
Apr. 75	720	604	336	56	47	
May 75	744	598	375	63	50	
Jun. 75	720	720	720	100	100	
Jul. 75	744	683	221	32	30	The system was shut down from mid-July to mid-September for mechanical overhaul involving replacement parts for valves that had failed.
Aug. 75	744	744	0	0	0	
Sep. 75	720	577	254	44	35	The system was put back in operation on September 16, 1975. From mid-September to mid-October the air preheater was repaired and boiler operation adjusted to reduce oxygen levels in the flue gas to the 5 to 6 percent range. The system operated approximately 800 hours during this period.
Oct. 75	744	559	559	100	75	
Nov. 75	720	620	560	90	78	The system ran continuously for the remainder of the test period through January 2, 1976. SO_2 levels during this period ranged from 800 to 1700 ppm. The system operated in the concentrated mode throughout the remainder of the test period. In the period from mid-September to January 2, 1976, the system operated about 2100 hours, with an operability factor of 97 percent.
Dec. 75	744	732	732	100	98	

Period	Total hours	Unit Operating Hours: Boiler	Unit Operating Hours: FGD system	FGD system operability	Performance (%) utilization	Comments
Jan. 76	744					The FGD system and boiler underwent a scheduled overhaul during the report period. System restart is scheduled for mid-March 1976, to continue till June. During this operating period high-sulfur coal (3.5-4.0 percent) will be burned to allow evaluation of system performance on high-sulfur coal.
Feb. 76	696					
Mar. 76	744	742	445	60	60	The system was put back in service on March 12, 1976. The total number of operating hours for the month of March was 445 hours. This translates into a 94% operability factor since the March 12 restart.
Apr. 76	720	642	616	96	86	Some minor mechanical problems in the form of agitator shaft and control value failures were encountered during the report period. Since the system restart on March 12, high sulfur coal has been burned in the boiler (3.5 to 4.5 percent sulfur), resulting in the SO_2 inlet concentration levels in the 2000 to 2500 ppm range.
May 76	744	735	651	89	88	
Jun. 76	720	656	641	93	89	During the last phase of operation, the system was treating flue gas of varying particulate loads. The upstream ESP was selectively de-energized, both partially and totally. No major upsets in the process chemistry occurred. Boiler load variation ranged from 30 to 100 percent. The prototype program at the plant was successfully conducted on July 2. ADL is currently completing data acquisition and analysis.

Period	Total hours	Unit Operating Hours: Boiler	Unit Operating Hours: FGD system	FGD system operability	Performance (%) utilization	Comments
Jul. 76	744	54*	54	100*		The prototype test program was successfully concluded on July 3, 1976.

*Note: The boiler hours, system operation hours, and the corresponding performance value calculated includes system operation up to the scheduled shutdown, which occurred on July 3, 6:00 A.M., 1976.

APPENDIX A

TERMINATED OPERATIONAL FGD SYSTEMS

IDENTIFICATION NO.	
UTILITY NAME	GULF POWER CO.
UNIT NAME	SCHOLZ NO. 2A
UNIT LOCATION	CHATTAHOOCHEE FLORIDA
UNIT RATING	20 MW
FUEL CHARACTERISTICS	COAL 3.0 PERCENT SULFUR
FGD VENDOR	FOSTER WHEELER
PROCESS	ACTIVATED CARBON
NEW OR RETROFIT	RETROFIT
START UP DATE	2/76
FGD STATUS	TERMINATED
EFFICIENCY, PARTICULATES	99.7 PERCENT
SO2	74.5 PERCENT (DESIGN)
WATER MAKE UP	N/A DRY ADSORPTION SYSTEM
SLUDGE DISPOSAL	MOLTEN ELEMENTAL SULFUR
UNIT COST	
OPERATIONAL EXPERIENCE	REFER TO THE BACKGROUND INFORMATION SECTION THAT IS PRESENTED ON THE FOLLOWING PAGES. THIS IS A PROTOTYPE DRY ADSORPTION REGENERABLE SYSTEM DESIGNED BY FOSTER WHEELER AND BERGBAU FORSCHUNG. OPERATION OF THE PROTOTYPE UNIT DURING THE SCHOLZ DEMONSTRATION PROGRAM PROCEEDED ON AN INTERMITTENT BASIS. OPERATIONAL SEGMENTS OCCURRED IN AUGUST 1975, OCTOBER 1975, AND MARCH, APRIL AND MAY 1976. SYSTEM OPERATIONS WERE PREMATURELY TERMINATED AT THIS POINT AND THE PROTOTYPE UNIT WAS SHUT DOWN. THE SYSTEM IS CURRENTLY INACTIVE. THE SYSTEM SUPPLIER IS NOW ATTEMPTING TO PROCURE ADDITIONAL FUNDS FOR THE RESUMPTION OF EXPERIMENTAL OPERATIONS.

BACKGROUND INFORMATION

ON

SCHOLZ NO. 2A - FWBF SYSTEM

IN JANUARY 1973, THE SOUTHERN SERVICES COMPANY OF GULF POWER AWARDED A CONTRACT TO THE FOSTER WHEELER CORPORATION TO BUILD A 20 MW PROTOTYPE DRY ADSORPTION SYSTEM FOR FLUE GAS DESULFURIZATION. CONSTRUCTION ON THE FOSTER WHEELER PROCESS STARTED FEBRUARY 15, 1974, AT THE SCHOLZ STEAM POWER PLANT IN CHATTACHOOCHEE, FLA. CONSTRUCTION WAS COMPLETED AND A TESTING PROGRAM WAS INITIATED IN MAY 1975.

THE SYSTEM AT THE SCHOLZ PLANT CONSISTS OF A 20-MW ADSORBER SECTION AND A 47.5-MW REGENERATION AND REDUCTION SECTION. THE 20 MW ADSORBER IS DESIGNED TO ACCEPT HALF OF THE MAXIMUM FLUE GAS FLOW FROM UNIT NO. 2. THE COAL-FIRED BOILER IS RATED AT 40 MW (NOMINAL); IT FIRES COAL WITH AN AVERAGE HEATING VALUE OF 12,400 BTU/LB. MAXIMUM ASH AND SULFUR CONTENTS ARE 14 AND 5 PERCENT, RESPECTIVELY.

THE PURPOSE OF THE ADSORPTION SECTION OF THE FWBF DRY REMOVAL SYSTEM IS TO REMOVE SULFUR DIOXIDE, NITROGEN OXIDES, AND PARTICULATE FROM THE FLUE GAS WITH ACTIVATED CHAR, CONVERTING THE CAPTURED POLLUTANTS TO SULFURIC ACID. THE REGENERATION SECTION PROVIDES CONTINUOUS ON-SITE REGENERATION OF THE CHAR, WHICH HAS BEEN LOADED WITH SULFUR DIOXIDE IN THE FORM OF SULFURIC ACID. THE CHAR IS REGENERATED AND A LOW-VOLUME, SULFUR DIOXIDE-RICH OFF-GAS STREAM IS FED FORWARD TO THE RESOX REACTOR, WHICH REDUCES THE SULFUR DIOXIDE STREAM TO GASEOUS ELEMENTAL SULFUR THAT IS COLLECTED AND STORED IN AN INSULATED TANK.

THE DEMONSTRATION UNIT HAS TWO ROWS OF MODULES, EACH ROW CONSISTING OF SIX MODULES. THE ADSORPTION SECTION IS A TWO-STAGE DESIGN CONSISTING OF VERTICAL COLUMNS OF PARALLEL LOUVER BEDS WHICH SUPPORT AND CONTAIN THE ACTIVATED CHARCOAL. SULFUR DIOXIDE, OXYGEN, WATER VAPOR, AND NITROGEN OXIDES ARE ADSORBED BY THE CHAR PELLETS FROM THE CROSS-FLOWING FLUE GAS AT 250 TO 300°F. THE SULFUR DIOXIDE THEN REACTS WITH OXYGEN AND WATER TO FORM SULFURIC ACID WHICH IS FIRMLY RETAINED IN THE INTERIOR PORE SYSTEM OF THE CHAR PELLETS. THE CHAR IS THEN REGENERATED IN THE REGENERATOR VESSEL BY HEATING TO 1200°F, DRIVING OFF THE ENTRAINED GASES, AND REDUCING SULFURIC ACID TO SULFUR DIOXIDE. THE SULFUR DIOXIDE-RICH GAS IS THEN PASSED THROUGH A VESSEL CONTAINING CRUSHED COAL, RESULTING IN REDUCTION TO GASEOUS ELEMENTAL SULFUR AND CARBON DIOXIDE. THIS LATTER PROCESS IS CARRIED OUT AT 1200° TO 1500°F. A SCHEMATIC OF THE PROCESS COMPONENTS FOR THE FW-BF DRY ADSORPTION IS PRESENTED IN FIGURE 24 OF APPENDIX C.

THE INITIAL SHAKEDOWN ON FLUE GAS BEGAN AUGUST 11, 1975, AND PROCEEDED CONTINUOUSLY FOR 10 DAYS. THE REGENERATION SECTION WAS OPERATIONAL ABOUT 60 PERCENT OF THE TIME. HOWEVER, THE REDUCTION SECTION HAS NOT YET BEEN INTEGRATED INTO SYSTEM OPERATION. SULFUR DIOXIDE REMOVAL WAS WELL ABOVE EXPECTATIONS AND PRESSURE DROP ACROSS THE ADSORBER WAS WELL BELOW DESIGN LEVELS. THE SYSTEM WAS SHUT DOWN FOR CORRECTION OF SEVERAL OPERATING PROBLEMS,

EQUIPMENT MODIFICATIONS, AND EVALUATION OF THE INTIAL OPERATING DATA. OPERATION WAS RESUMED IN OCTOBER 1975, WHEN TWO CONSECUTIVE RUNS WERE CONDUCTED WITH THE REDUCTION PORTION OF THE SYSTEM PROCESSING FRONT-END OFF-GAS AT FULL OPERATING TEMPERATURES. A PROGRAM OF MODIFICATION WAS COMPLETED ON THIS SYSTEM IN EARLY JANUARY 1976. REINTRODUCTION OF FLUE GAS INTO THE INTEGRATED SYSTEM COMMENCED IN FEBRUARY 1976. OPERATIONS THROUGH A FINAL 4-MONTH TEST PROGRAM WERE PREMATURELY TERMINATED ON MAY 2, 1976.

FWBF SYSTEM OPERATING HISTORY

Period	Comments
May 75 Jun. 75 Jul. 75 Aug. 75	Completion of construction was followed by a 3-month commissioning period during which various pieces of equipment were operated individually and then in combinations to simulate subsystem operation. Subsystem operations were integrated into section operations and flue gas was passed through the adsorber and regenerator for a 10-day period beginning August 11. RESOX construction was incomplete at this time.
Oct. 75	Two consecutive runs were conducted on the RESOX portion of the system on front-end process off-gas at full operating temperatures. This operational period lasted 5 days.
Nov. 5 Dec. 75 Jan. 76	A program of modifications on the system began in late August 1975 and continued through January 1976, with the exception of the 5-day RESOX operation in October. Modifications were completed and pre-startup testing was conducted in late January and early February. A 3-day continuous dry run was successfully completed.
Feb. 76	All materials-handling loops and RESOX loops were operated at full operating temperatures and pressures. Reintroduction of flue gas into the system commenced, and a 4-month formal test program conducted by Southern Services and Foster Wheeler is now in progress.
Mar. 76 Apr. 76	Three operational periods were logged by the prototype system during the report months. During these runs the adsorption and regeneration sections performed adequately. The RESOX section operated intermittently because of plugging problems in the sulfur condenser. Also, the front end of the system was taken down at one point due to frequent high temperature excursions. This problem was corrected by modifying system operating procedures. Currently, work is proceeding on the solution of the sulfur condenser problem.

FWBF SYSTEM OPERATING HISTORY (Continued)

Period	Comments
May 76	The FW-BF unit completed an operational period in early May which had commenced on April 26. The system was taken down at this point for the following reasons: ° Depletion of char supply. ° High char consumption rates due to mechanical attrition. ° Correct/modify the char/sand screen separator. At this point the decision was made to prematurely terminate the FW-BF demonstration program rather than shut down, debug, and restart the system again. The system supplier is pursuing additional funding for the continuation of the prototype demonstration program.

TERMINATED OPERATIONAL FGD SYSTEMS

IDENTIFICATION NO.	5
UTILITY NAME	ILLINOIS POWER
UNIT NAME	WOOD RIVER NO 4
UNIT LOCATION	EAST ALTON ILLINOIS
UNIT RATING	110 MW
FUEL CHARACTERISTICS	COAL 2.9- 3.2 PERCENT SULFUR
FGD VENDOR	MONSANTO ENVIRO CHEM SYSTEMS
PROCESS	CATALYTIC OXIDATION
NEW OR RETROFIT	RETROFIT
START UP DATE	10/72
FGD STATUS	TERMINATED
EFFICIENCY, PARTICULATES	99 PERCENT
SO2	85 PERCENT
WATER MAKE UP	
SLUDGE DISPOSAL	SULFURIC ACID PRODUCT
UNIT COST	$82.5/KW CAPITAL + $952,000 OPERATING
OPERATIONAL EXPERIENCE	THE FGD SYSTEM HAS HAD CONSIDERABLE AMOUNT OF PROBLEMS SINCE STARTUP IN 1972. TOTAL OPERATION WAS 444 HOURS IN 1972, 158 HOURS IN 1973, AND 55 HOURS IN 1974. HEAT EXCHANGER LEAKS HAVE BEEN ENCOUNTERED, AND AN EVALUATION IS NOW BEING MADE TO DETERMINE WHETHER TO REPLACE THE HEAT EXCHANGER OR TO REPAIR IT. THE PROGRAM HAS BEEN PERMANENTLY TERMINATED.

BACKGROUND INFORMATION

ON

WOOD RIVER NO. 4

THE WOOD RIVER POWER STATION OF THE ILLINOIS POWER COMPANY IS LOCATED NEAR EAST ALTON, ILLINOIS, NORTH OF ST. LOUIS, MISSOURI. THE NO. 4 BOILER IS A COMBUSTION ENGINEERING PULVERIZED-COAL-FIRED UNIT THAT HAS A GROSS RATED CAPACITY OF 109 MW AND A NET CAPACITY OF 103 MW. THIS UNIT FIRES A HIGH SULFUR CENTRAL ILLINOIS COAL WITH TYPICAL CHARACTERISTICS OF 3.1 PERCENT SULFUR, 10 PERCENT ASH AND A HEAT CONTENT OF 10,800 BTU/LB. ANNUAL COAL CONSUMPTION IS APPROXIMATELY 275,000 TONS/YEAR.

THE EMISSION CONTROL EQUIPMENT FOR THIS BOILER INCLUDES MECHANICAL COLLECTORS, A HIGH EFFICIENCY ESP, AND A MONSANTO CATALYTIC OXIDATION (CATOX) FGD SYSTEM FOR THE CONTROL OF PARTICULATES AND SULFUR DIOXIDE. DESIGN REMOVAL EFFICIENCIES OF THIS CONTROL SYSTEM ARE 99.9 PERCENT FOR PARTICULATES AND 85 PERCENT FOR SULFUR DIOXIDE. INLET SULFUR DIOXIDE CONCENTRATIONS TO THE CATOX SYSTEM ARE GENERALLY IN THE 2000 TO 2200 PPM RANGE.

FOLLOWING PASSAGE THROUGH THE PARTICULATE REMOVAL SYSTEM, THE FLUE GAS ENTERING THE SCRUBBING SYSTEM IS HEATED TO A TEMPERATURE OF 850°F AND PASSES THROUGH A VANADIUM PENTOXIDE FIXED-BED CATALYTIC CONVERTER, WHERE THE SULFUR DIOXIDE IS OXIDIZED TO SULFUR TRIOXIDE. THE GAS THEN FLOWS THROUGH AN ACID ABSORPTION TOWER, WHERE THE SULFUR TRIOXIDE IN THE GAS IS CONVERTED TO SULFURIC ACID. AN ACID MIST ELIMINATOR ENSURES REMOVAL OF ENTRAINED ACID MIST FROM THE GAS STREAM. THE CLEANED GAS IS DISCHARGED TO THE STACK AND THE PRODUCT ACID IS COOLED AND STORED IN TANKS. A SIMPLIFIED PROCESS FLOW DIAGRAM OF THE WOOD RIVER CATOX SYSTEM IS PRESENTED IN FIGURE 25 OF APPENDIX C.

THIS DEMONSTRATION SYSTEM, PARTIALLY FINANCED BY EPA, WAS STARTED UP IN SEPTEMBER 1972. WHILE THE MAIN PARTS OF THE UNIT HAVE PERFORMED ACCEPTABLY, VARIOUS TROUBLES WITH ASSOCIATED EQUIPMENT HAVE CAUSED EXTENSIVE SHUTDOWNS AND DELAYS, TO THE EXTENT THAT APPROXIMATELY 27 DAYS OF FULL OPERATION HAS BEEN OBTAINED IN ALMOST TWO YEARS. A 24-HOUR PERFORMANCE TEST RUN WAS COMPLETED IN JULY 1973. THE FOLLOWING GUARANTEES WERE ACHIEVED AND EXCEEDED: 90 PERCENT CONVERSION OF SULFUR DIOXIDE TO SULFUR TRIOXIDE (ABOUT 85 PERCENT NET REMOVAL); 99 PERCENT REMOVAL OF PARTICULATE ENTERING THE SYSTEM; LESS THAN 1 MG/ACF OF ACID MIST IN GAS LEAVING SYSTEM; PRODUCTION OF 60° BAUME' ACID.

PERFORMANCE SUMMARY

THE WOOD RIVER SYSTEM WAS STARTED UP IN SEPTEMBER 1972 BUT WAS SHUT DOWN ALMOST IMMEDIATELY (IN OCTOBER) TO CONVERT THE BURNERS TO OIL FIRING, WHICH WAS NOT COMPLETED UNTIL JUNE 1973. A SUCCESSFUL PERFORMANCE TEST WAS THEN MADE, BUT BECAUSE OF THE CATALYST PLUGGING HAZARD THE SYSTEM WAS SHUT DOWN AGAIN TO INSTALL AN EXTERNAL BURNER SYSTEM, WHICH WAS NOT COMPLETED UNTIL APRIL 1974. VARIOUS OTHER PROBLEMS WITH STANDARD EQUIPMENT HAVE BEEN ENCOUNTERED SINCE, WITH THE RESULT THAT ONLY 657 HOURS OF OPERATING TIME HAVE BEEN LOGGED IN ALMOST TWO YEARS.

SEVERAL OTHER MAJOR PROBLEM AREAS ENCOUNTERED DURING THE INTERMITTENT OPERATION OF THIS REGENERABLE SYSTEM INCLUDED: FROZEN DAMPERS ON REHEAT BURNERS, CRACKS IN THE TEFLON LINER ON THE ACID PUMP'S DISCHARGE HEADER, CRACKS IN THE REHEAT DUCTING, FALL OF REFRACTORY BRICKS FROM THE REHEATER BURNER DOME, AND NEED FOR REINFORCEMENT OF THE STRUCTURE SUPPORTING THE HIGH TEMPERATURE FLUE GAS DUCT TO THE CATALYTIC CONVERTER. MOST OF THESE PROBLEMS HAVE BEEN CORRECTED. ILLINOIS POWER AND EPA ARE NOW DETERMINING HOW TO CORRECT LEAKING ACID COOLERS. PATCHING ATTEMPTS HAVE BEEN UNSUCCESSFUL. REPAIR OR REPLACMENT OF THE COOLERS IS EXPECTED TO TAKE SEVERAL MONTHS. EVALUATION FOR THE CONTINUATION OF FUTURE OPERATION IS STILL UNDER CONSIDERATION. A DECISION ON FUTURE OPERATIONS OF THIS SYSTEM WILL BE ANNOUNCED SHORTLY.

OPERATING LOG

CATALYTIC OXIDATION SYSTEM

WOOD RIVER NO. 4 - ILLINOIS POWER CO.,

1972 TO 1973

Date	System operating hours	Date	System operating hours
9-4-72	12	10-8-72	24
9-5-72	24	10-9-72	24
9-6-72	24	10-10-72	18
9-7-72	2	10-12-72	16
9-10-72	6	10-13-72	20
9-11-72	2	10-14-72	16
9-12-72	16	10-30-72	24
9-13-72	24	10-31-72	16
9-14-72	24	7-21-73	18
9-15-72	24	7-22-73	24
9-16-72	24	7-23-73	18
9-17-72	24	7-24-73	24
9-18-72	24	7-25-73	14
9-19-72	3	7-26-73	13
9-24-72	17	7-17-73	19
10-6-72	12	7-28-73	19
10-7-72	24	7-29-73	9

NOTE: The operation time log does not include intermittent system operation during 1974. System operations for 1974 amounted to 55 hours. Total operation time for 2.5 years of operation was 657 hours.

TERMINATED OPERATIONAL FGD SYSTEMS

IDENTIFICATION NO.	6
UTILITY NAME	POTOMAC ELECTRIC & POWER
UNIT NAME	DICKERSON NO 3
UNIT LOCATION	DICKERSON MARYLAND
UNIT RATING	95 MW
FUEL CHARACTERISTICS	COAL 2.0 PERCENT SULFUR
FGD VENDOR	CHEMICO
PROCESS	MAGNESIUM OXIDE SCRUBBING
NEW OR RETROFIT	RETROFIT
START UP DATE	9/73
FGD STATUS	TERMINATED
EFFICIENCY, PARTICULATES	99.3 PERCENT
SO2	90 PERCENT
WATER MAKE UP	3.2 GPM/MW
SLUDGE DISPOSAL	ACID PLANT REGENERATION
UNIT COST	$70/KW CAPITAL
OPERATIONAL EXPERIENCE	REFER TO BACKGROUND INFORMATION SECTION IN APPENDIX A OF THIS REPORT. THIS FGD SYSTEM HAS BEEN OPERATIONAL SINCE SEPTEMBER 1973. THE UNIT HAS BEEN TERMINATED AS AN SO2 SCRUBBER. HOWEVER, IT WILL CONTINUE TO OPERATE AS A PARTICULATE SCRUBBER.

BACKGROUND INFORMATION

ON

DICKERSON NO. 3

THE DICKERSON STATION OF POTOMAC ELECTRIC POWER CO. (PEPCO) IS LOCATED ON THE POTOMAC RIVER NEAR DICKERSON, MARYLAND, ABOUT 30 MILES NORTHWEST OF WASHINGTON, D.C. THE STATION HAS THREE ELECTRIC GENERATORS, EACH RATED AT 190 MW. UNIT NO. 3 IS A DRY BOTTOM COAL-FIRED BOILER DESIGNED BY COMBUSTION ENGINEERING AND INSTALLED IN 1962. THE COAL NOW BURNED HAS AN AVERAGE GROSS HEATING VALUE OF 11,700 BTU/LB AND AVERAGE ASH AND SULFUR CONTENTS OF 14 AND 2 PERCENT, RESPECTIVELY. THE BOILER IS FITTED WITH AN ELECTROSTATIC PRECIPITATOR DESIGNED AND INSTALLED BY RESEARCH-COTTRELL IN 1962. THE FGD SYSTEM EMPLOYS THE CHEMICO-BASIC MAGNESIUM OXIDE SCRUBBING PROCESS. THE RETROFIT SYSTEM HANDLES APPROXIMATELY 50 PERCENT OF THE EXHAUST GAS FROM THE NO. 3 UNIT.

THE FGD SYSTEM CONSISTS OF A SINGLE, TWO-STAGE SCRUBBER/ABSORBER, WHICH INCORPORATES AN ADJUSTABLE-THROAT VENTURI SCRUBBER FOR PARTICULATE REMOVAL AND A SECOND STAGE ABSORBER WITH A FIXED VENTURI TO REMOVE SULFUR DIOXIDE. THE LIQUOR STREAMS FOR BOTH STAGES ARE SEPARATE AND OPERATE IN A CLOSED-LOOP MODE. UNTIL MID-1975 THE MAGNESIUM SULFITE GENERATED WAS TRANSFERRED TO AN EPA FINANCED FACILITY AT THE ESSEX CHEMICAL COMPANY SULFURIC ACID MANUFACTURING PLANT IN RUMFORD, RHODE ISLAND, WHERE MAGNESIUM OXIDE WAS REGENERATED AND SUFLUR DIOXIDE FROM THE REGENERATION PROCESS WAS CONVERTED TO SULFURIC ACID. THE RUMFORD FACILITY HAS SINCE BEEN CLOSED DOWN. A GENERAL PROCESS FLOW DIAGRAM OF THE DICKERSON NO. 3 WET SCRUBBING SYSTEM AND REGENERATION FACILITIES IS PRESENTED IN FIGURE 25 OF APPENDIX C.

CONSTRUCTION WAS COMPLETED IN AUGUST AND THE SYSTEM STARTED UP IN SEPTEMBER 1973. DURING INTERMITTENT OPERATIONS FOR SHAKEDOWN THROUGH JANUARY 1974, THE SYSTEM'S LONGEST CONTINUOUS RUN WAS 271 HOURS. THE SYSTEM WAS RESTARTED FROM JULY THROUGH DECEMBER 1974, AND AGAIN ON AUGUST 11, 1975, FOR APPROXIMATELY 87 HOURS.

FGD UNIT OUTAGES WERE CAUSED PRIMARILY BY PIPE AND PUMP CORROSION AND MAJOR TURBINE OVERHAUL OF THE BOILER. PARTICULATE AND SULFUR DIOXIDE REMOVAL EFFICIENCY GUARANTEES WERE CORROBORATED DURING OPERATIONAL PHASES.

THE REMAINING SUPPLY OF MAGNESIUM OXIDE, ABOUT 100 TONS (10 DAYS), HAS BEEN DEPLETED, AND THE DICKERSON UNIT HAS BEEN TERMINATED AS AN FGD SYSTEM.

DICKERSON NO. 3

FGD SYSTEM OPERATING HISTORY

Operating Period	Comments
Sep. 73 to Jan. 74	Problems during this period ranged from corrosion leaks in expansion joints to problems in material handling equipment, feeding and slaking of MgO, plugging in the MgO mix tank and suction lines to the MgO make-up pumps.
Jan. 74 to Apr. 74	Maintenance and modifications were performed on the system. The major system revision made during this period was the addition of a pre-mix tank in the MgO system.
Apr. 74 to Jul. 74	Limited operation because the utility did not have access to the EPA calcining facility at the Essex Chemical Company sulfuric acid plant. By the end of June 1974, all the MgO at Dickerson had been used and a silo plus three train cars were full of $MgSO_3$.
Aug. 74 to Dec. 74	During this period the system generally operated at 75 percent of the design gas flow.
Jan. 75	Problems developed in the bucket elevator transporting the $MgSO_3$ from the dryer to the storage silo.
Feb. 75 to Jul. 75	Unit No. 3 was taken out of service for an 8 to 12 week turbine overhaul. The scrubber was inspected, maintenance and modifications were made.

DICKERSON NO. 3 (Continued)

FGD SYSTEM OPERATING HISTORY

Operating Period	Comments
Aug. 75	The FGD system was restarted in August. Steam was lost to the MgO mix tank, resulting in a very moist product from the centrifuge. Caking in the dryer occurred. At this point, the utility decided to test only the first-stage of the scrubbing system, taking gas ahead of the precipitator. FGD operation at Dickerson terminated at this point.

TERMINATED OPERATIONAL FGD SYSTEMS

IDENTIFICATION NO.	7
UTILITY NAME	SOUTHERN CALIFORNIA EDISON
UNIT NAME	MOHAVE NO 1A
UNIT LOCATION	LAUGHLIN NEVADA
UNIT RATING	170 MW
FUEL CHARACTERISTICS	COAL 0.5- 0.8 PERCENT SULFUR
FGD VENDOR	UNIVERSAL OIL PRODUCTS
PROCESS	LIMESTONE SCRUBBING
NEW OR RETROFIT	RETROFIT
START UP DATE	11/74
FGD STATUS	TERMINATED
EFFICIENCY, PARTICULATES	93 PERCENT
SO2	95 PERCENT
WATER MAKE UP	0.92 GPM/MW
SLUDGE DISPOSAL	EXPERIMENTAL METHODS
UNIT COST	NOT AVAILABLE
OPERATIONAL EXPERIENCE	THIS EXPERIMENTAL MODULE STARTED UP OCT. 31, 1974 AND OPERATED WITH AN AVAILABILITY OF 60.4% THROUGH FOUR MONTHS OF TESTING. TESTS HAVE BEEN COMPLETED, AND THE FGD SYSTEM WAS SHUT DOWN INDEFINITELY ON JULY 2, 1975. NEVADA ASSEMBLY BILL NO. 708 HAS PLACED A 2-YEAR MORATORIUM ON THE ENFORCEMENT OF THE COMPLIANCE SCHEDULE FOR THIS STATION. FURTHER FGD ACTIVITIES WILL BE DEPENDENT ON FUTURE LEGISLATION.

APPENDIX A

TERMINATED OPERATIONAL FGD SYSTEMS

IDENTIFICATION NO.	8
UTILITY NAME	SOUTHERN CALIFORNIA EDISON
UNIT NAME	MOHAVE NO. 2A
UNIT LOCATION	LAUGHLIN NEVADA
UNIT RATING	160 MW
FUEL CHARACTERISTICS	COAL 0.5- 0.8 PERCENT SULFUR
FGD VENDOR	SCE/ STEARNS ROGER
PROCESS	LIME SCRUBBING
NEW OR RETROFIT	RETROFIT
START UP DATE	11/73
FGD STATUS	TERMINATED
EFFICIENCY, PARTICULATES	93 PERCENT
SO_2	95 PERCENT
WATER MAKE UP	1.0 GPM/MW
SLUDGE DISPOSAL	STABILIZED SLUDGE DISPOSED IN UNLINED POND
UNIT COST	NOT AVAILABLE
OPERATIONAL EXPERIENCE	SINCE STARTUP OF FORMAL TEST PROGRAM ON JANUARY 16, 1974, AND UP TO DECEMBER 20, 1974, THIS EXPERIMENTAL HORIZONTAL MODULE OPERATED 5280 HRS. WITH AN OVERALL AVAILABILITY OF 77.4 PERCENT, SO_2 REMOVAL EFFICIENCY WAS 90 IN FLUE GAS TO SIMULATE CONDITIONS FROM COMBUSTION OF HIGH SULFUR COAL. THIS FGD SYSTEM OPERATED FROM NOVEMBER 1973 UNTIL FEBRUARY 1975. FGD PLANS AT THIS STATION WILL BE BASED ON INFORMATION THAT INCLUDES OPERATIONAL DATA THAT HAVE BEEN OBTAINED DURING THE FGD TEST PROGRAMS AT THE MOHAVE STATION. THE PHOTOTYPE SYSTEM AT MOHAVE IS NOW BEING DISMANTLED AND IS BEING SHIPPED TO THE FOUR CORNERS PLANT, OPERATED BY ARIZONA PUBLIC SERVICE, FOR INSTALLATION.

PEDCo ENVIRONMENTAL

BACKGROUND INFORMATION

ON

THE MOHAVE TEST MODULES PROGRAM: NOS. 1A AND 2A

TWO PROTOTYPE SULFUR DIOXIDE ABSORBER MODULES WERE INSTALLED IN 1973 AT THE MOHAVE GENERATING STATION OF THE SOUTHERN CALIFORNIA EDISON COMPANY. A VERTICAL MODULE, RATED AT 170 MW, WAS INSTALLED TO TREAT 450,000 SCFM PORTION OF THE FLUE GAS FROM UNIT NO. 1. A HORIZONTAL MODULE, ALSO RATED AT 170 MW, WAS INSTALLED TO TREAT A SIMILAR FLUE GAS PORTION FROM UNIT NO. 2. UNITS 1 AND 2 ARE IDENTICAL BOILERS, EACH HAVING A MAXIMUM NET CONTINUOUS GENERATING CAPACITY OF 790 MW AND EACH BURNING A WESTERN, LOW-SULFUR COAL WITH A HEATING VALUE OF 11,500 BTU/LB AND ASH AND SULFUR CONTENTS OF 10 AND 0.4 PERCENT RESPECTIVELY.

VERTICAL MODULE

THE VERTICAL MODULE, A UNIVERSAL OIL PRODUCTS TURBULENT CONTACT ABSORBER (TCA), WAS TESTED IN TWO MODES: FIRST, AS A TCA UNIT, FROM NOVEMBER 2, 1974 TO APRIL 30, 1975, AND SECOND AS A POLYGRID PACKED ABSORBER (PPA), WHEN THEN THE "PING PONG BALLS" WERE REPLACED WITH A PLASTIC "EGGCRATE" PACKING WITH TESTING CONTINUING TO JULY 2, 1975.

STARTUP OF THE VERTICAL MODULE WAS INITIATED ON SCHEDULE JANUARY 1, 1974. ON JANUARY 24, 1974, A FIRE BURNED MOST OF THE CHLOROBUTYL LINING AND SYSTEM RESTART WAS DELAYED UNTIL OCTOBER 1, 1974. TESTING OF THIS MODULE FOLLOWED A MONTH LATER AND WAS COMPLETED AFTER 3,131 HOURS OF OPERATION. THE MODULE IS PRESENTLY SHUT DOWN IN A COLD STAND-BY CONDITION AT THE MOHAVE GENERATING STATION.

HORIZONTAL MODULE

THE HORIZONTAL MODULE, A FOUR-STAGE HORIZONTAL CROSSFLOW SPRAY SCRUBBER, WAS OPERATED BY THE UTILITY IN A SHORT SERIES OF STARTUP TESTS THAT ENDED ON JANUARY 16, 1974, WHEN A FORMAL TEST PROGRAM WAS INITIATED TO ASSESS THE PERFORMANCE AND RELIABILITY CHARACTERISTICS OF THE SCRUBBING SYSTEM. THE TEST PROGRAM WAS TERMINATED ON FEBRUARY 9, 1975, FOLLOWING 5,927 HOURS OF OPERATION. THE MODULE WAS SUBSEQUENTLY DISMANTLED, TRANSPORTED, AND REASSEMBLED AT THE FOUR CORNERS PLANT OF ARIZONA PUBLIC SERVICE WHERE ADDITIONAL TESTING IS NOW BEING CONDUCTED.

INFORMATION AND DATA CONCERNING THE PERFORMANCE OF THE MOHAVE TEST MODULES ARE GIVEN IN THE FOLLOWING PERFORMANCE TABLES. PROCESS FLOW DIAGRAMS OF THE TEST MODULES ARE PROVIDED IN FIGURES 27 AND 28 OF APPENDIX C.

MOHAVE NO. 1A - VERTICAL TEST MODULE

OUTAGE TIME HISTORY: NOVEMBER 2, 1974 TO JULY 2, 1975

	Reason	Time (hr)
1.	Repair grids and redistribute TCA balls	710
2.	Clean scale from scrubber internals	344
3.	Repair/replace plugged nozzles	153
4.	Repair leaks in trap-out tray	120
5.	Repair/realign PPA packing	85
6.	Correct booster fan trip problems	72
7.	Conduct inspections for extended operations	46
8.	Remove hardhat from thickener	46
9.	Total outage time	1585

Total outage time: 1585 hours

Total calendar time: 5813 hours

Total operational time: 4228 hours

Percent availability: 72.73

MOHAVE NO. 2A - HORIZONTAL TEST MODULE

OUTAGE TIME HISTORY: JANUARY 16, 1974 TO FEBRUARY 9, 1975

	Reason	Time (hr)
1.	Modify and repair plastic demister blades	503
2.	Correct booster fan balance problems	317
3.	Pump repair	256
4.	Spray nozzle replacement	238
5.	Modify gas inlet flow distribution	162
6.	Repair hopper leaks	135
7.	Remove hardhat from thickener	82
8.	Modify slaking water for scale prevention	45
9.	Conduct inspections for extended operations	19
10.	Total outage time	1757

Total outage time: 1757 hours

Total calendar time: 9328 hours

Total operating time: 7571 hours

Percent availability: 81.16%

APPENDIX A

TERMINATED OPERATIONAL FGD SYSTEMS

IDENTIFICATION NO.	9
UTILITY NAME	TENNESSEE VALLEY AUTHORITY
UNIT NAME	SHAWNEE NO. 10C
UNIT LOCATION	PADUCAH KENTUCKY
UNIT RATING	10 MW
FUEL CHARACTERISTICS	COAL 2.9 PERCENT SULFUR
FGD VENDOR	TENNESSEE VALLEY AUTHORITY
PROCESS	LIME/LIMESTONE SCRUBBING
NEW OR RETROFIT	RETROFIT
START UP DATE	4/72
FGD STATUS	OPERATIONAL
EFFICIENCY, PARTICULATES	EXPERIMENTALLY CONTROLLED
SO2	EXPERIMENTALLY CONTROLLED
WATER MAKE UP	EXPERIMENTALLY CONTROLLED
SLUDGE DISPOSAL	EXPERIMENTALLY CONTROLLED
UNIT COST	
OPERATIONAL EXPERIENCE	REFER TO BACKGROUND INFORMATION SECTION IN APPENDIX C. THIS FGD SYSTEM HAS BEEN OPERATIONAL SINCE APRIL,1972. THIS MARBLE-BED ABSORBER, MANUFACTURED BY COMBUSTION ENGINEERING CO., WAS DISCONTINUED EARLY IN THE TEST PROGRAM BECAUSE OF CONTINUED OPERATING PROBLEMS WITH NOZZLE FAILURE AND SUBSEQUENT PLUGGING OF THE MARBLE BED. THIS SYSTEM BECAME OPERATIONAL IN APRIL 1972 AND WAS PERMANENTLY TERMINATED IN JULY 1973.

BACKGROUND INFORMATION

ON

SHAWNEE NOS. 10A, 10B, AND 10C

IN JUNE 1968, THE EPA INITIATED A PROGRAM TO TEST PROTOTYPE WET LIME AND LIMESTONE SCRUBBING SYSTEMS FOR REMOVAL OF SULFUR DIOXIDE AND PARTICULATES FROM FLUE GAS. THE PROGRAM WAS CARRIED OUT IN A TEST FACILITY INCORPORATED INTO THE FLUE GAS DUCT WORK OF UNIT NO. 10, A COAL-IFRED BOILER AT THE TVA SHAWNEE POWER STATION, PADUCAH, KENTUCKY. TVA IS THE CONSTUCTOR AND FACILITY OPERATOR AND THE BECHTEL CORP. IS THE MAJOR CONTRACTOR AND TEST DIRECTOR.

THE TEST FACILITY CONSISTS OF THREE PARALLEL SCRUBBER SYSTEMS OF PROTOTYPE SIZE TREATING PART OF THE FLUE GAS FROM THE BOILER. EACH SCRUBBER TRAIN IS CAPABLE OF TREATING APPROXIMATELY 30,000 ACFM, OR THE EQUIVALENT OF APPROXIMATELY 10 MW OF POWER PLANT GENERATING CAPACITY.

THREE PARALLEL WET SCRUBBER SYSTEMS WERE SELECTED FOR THE TEST PROJECT: 1) A VENTURI WITH A SPRAY TOWER AFTER ABSORBER; 2) A TURBULENT CONTACT ABSORBER (TCA) AND 3) A MARBLE-BED ABSORBER. THE VENTURI SYSTEM, MANUFACTURED BY CHEMICAL CONSTRUCTION CO., CONTAINS AN ADJUSTABLE THROAT THAT PERMITS CONTROL AND VARIATION OF PRESSURE DROP UNDER A WIDE RANGE OF FLOW CONDITIONS. THE TCA UNIT, MANUFACTURED BY UNIVERSAL OIL PRODUCTS, EMPLOYS A FLUIDIZED BED OF LOW DENSITY PLASTIC SPHERES THAT ARE FREE TO MOVE BETWEEN RETURNING GRIDS. THE MARBLE-BED ABSORBER, SUPPLIED BY COMBUSTION ENGINEERING CO., USES A PACKING OF 3/4-INCH GLASS MARBLE SPHERES AND A TURBULENT LAYER OF LIQUID AND GAS ABOVE THE MARBLE LAYER TO ENHANCE MASS TRANSFER.

THE TEST FACILITY WAS DESIGNED SO THAT MODIFICATIONS AND VARIATIONS OF SCRUBBER INTERNALS AND PIPING COULD BE READILY EMPLOYED FOR EACH SCRUBBER SYSTEM. EACH SYSTEM CAN TREAT APPROXIMATELY 30,000 ACFM OF FLUE GAS AT 300°F CONTAINING 1800 TO 4000 PPM OF SO_2 AND 2 TO 5 GRAINS/SCF OF PARTICULATES. TESTING OF THE TCA AND THE VENTURI SPRAY TOWER IS IN PROGRESS; OPERATION OF THE MARBLE-BED ABSORBER UNIT HAS BEEN PERMANENTLY DISCONTINUED.

APPENDIX B

FGD ECONOMICS

COMPANY PLANT UNITS TOTAL CAPACITY, MW	PROCESS STATUS START-UP DATE	REPORTED CAPITAL COSTS,		REPORTED OPERATING COSTS,		COMMENTS
		$ MILLION	$/KW	$ ANNUAL	MILLS/KWH	
Alabama Electric Coop. Tombigbee Power Station Nos. 2 & 3 450	Limestone Construction 3/78 & 3/79	40.464	89.92	240,323	0.77	1. Capital cost figures include upstream particulate control equipment (ESP's). 2. 70% of the flue gas capacity is scrubbed. 3. Annual operating costs are calculated for 1978 with a 60% boiler capacity factor.
Arizona Public Service Cholla Electric Generating Station No. 1 115	Limestone Operational 10/73	6.555	57.0		2.20	1. Capital cost figure includes the venturi scrubbers (2) for particulate control. This figure represents total expenditures made by the utility through 1973. 2. Capital cost figure does not include limestone preparation and sludge handling facilities and interest on capital during construction. 3. Additional costs incurred by the system supplier have not been reported.
Boston Edison Company Mystic Power Station No. 1 155	Magnesium Oxide Terminated 4/72	9.510	63.4	615,000	3.0	1. All cost figures are reported for the project completion date of 1974. 2. The total installed capital cost of the Rumford calcination facility was approximately $4.5 MM. 3. Capital charges are not included because of non-applicability to a 2-year demonstration program. 4. Operating costs for the acid plant regeneration facility are not included. 5. The cost of make-up magnesium oxide ($150/T) are not included. 6. 3.0 mills/kWh is an estimate for total operation and maintenance costs, including calcination. 7. BECO and EPA each subsidized approximately 50% of the costs of the demonstration program. Chemico also underwrote some of the program costs.

Note: N/A indicates figures are not available.

COMPANY PLANT UNITS TOTAL CAPACITY, MW	PROCESS STATUS START-UP DATE	REPORTED CAPITAL COSTS,		REPORTED OPERATING COSTS,		COMMENTS
		$ MILLION	$/KW	$ ANNUAL	MILLS/KWH	
Big Rivers Electric Coop Reid Steam Station No. 2 280	Lime Contract Awarded 1979	16	64			1. The reported capital cost figure applies to the amount of the contract awarded to AAF for a turnkey emission control installation. 2. The figure includes an AAF-ELEX ESP, two spray towers, reheater, ancillary equipment, ductwork, and molecular pre-wired control rooms. 3. All figures are reported in 1976 dollars. 4. Escalation factors, costs, and indirect costs are not included.
Central Illinois Light Co. Duck Creek Power Plant No. 1 400	Limestone Operational, Construction 9/76 & 8/78	36	90	N/A		1. The capital cost figure is an estimate of expenditures, including $4.0 MM for the ESP, and the cost of the limestone milling and waste disposal facilities. 2. One module has been completely installed and temporarily started-up in September 1976. The remaining three modules are scheduled for operation in August 1978.
Central Illinois Public Serv. Newton Station No. 1 575	Double Alkali	48.875	85	13.425 MM	3.81	1. The capital cost figure is an estimate for total projected expenditures. Since construction has recently commenced, exact figures are not available. Total expenditures may well run higher than the $85/kW posted in the table. 2. Cost to own and operate figures are projections based upon firing the design coal (10,900 Btu/lb, 4% S, 0.2% Cl at a load factor of 70% with a system SO_2 removal efficiency of 95%. Full load heat release is 5500 MM Btu/hr. Stack exit temperature is 154°F. System lifetime is 30 years.

Note: N/A indicates figures are not available.

PEDCo ENVIRONMENTAL

APPENDIX B (Continued). FGD SYSTEMS ECONOMICS

COMPANY PLANT UNITS TOTAL CAPACITY, MW	PROCESS STATUS START-UP DATE	REPORTED CAPITAL COSTS,		REPORTED OPERATING COSTS,		COMMENTS
		$ MILLION	$/KW	$ ANNUAL	MILLS/KWH	
Columbus & So. Ohio Electric Conesville Generating Station Nos. 5 & 6 800	Lime Construction 12/76 & 1/78	38.661	48.32	7.826 MM	2.83	1. The capital cost figure includes direct costs only. 2. The electrostatic precipitators are also included in the capital cost figure ($4.973 MM for 2 units). 3. Annual operating costs are estimated for both units at a load factor of 39.5%. 4. The cost estimates are given in 1975 dollars.
Colorado Ute Electric Craig Station Nos. 1 & 2 900	Not selected Considering Spring, 1979	105	117	15 MM		1. The total capital cost figure is an estimate provided by the utility that does not include limestone preparation and sludge disposal facilities. This figure is based upon a non-regenerable SO_2 scrubbing system (lime/limestone). 2. Electrostatic precipitators are included in the capital cost figure. 3. The annual operating cost figure is a utility estimate also based upon the installation of a non-regenerable SO_2 scrubbing system.
Commonwealth Edison Powerton Station No. 51 425	Limestone Contract Awarded	50	117.65		8.70	1. The total installed capital cost expenditures apply to the following timetable: all expenditures will be made from May 1976 to December 1978; expenditures of $16 MM will be made from October 1976 to October 1977. 2. The annual operating cost is an estimate which includes the following items: 2.7 mills/kWh for operation and maintenance. 6.0 mills/kWh for auxiliary power requirements. Scrubber life span is estimated for an annual usage rate of 148,000,000 kWh.

Note: N/A indicates figures are not available.

PEDCo ENVIRONMENTAL

APPENDIX B (Continued). FGD SYSTEMS ECONOMICS

COMPANY PLANT UNITS TOTAL CAPACITY, MW	PROCESS STATUS START-UP DATE	REPORTED CAPITAL COSTS,		REPORTED OPERATING COSTS,		COMMENTS
		$ MILLION	$/KW	$ ANNUAL	MILLS/KWH	
Commonwealth Edison Will County Station No. 1 167	Limestone Operational 2/72	15.542	113	3.985 MM	13.06	1. The capital cost figure includes the venturi scrubbers for particulate control. 2. The annual operating cost figure is based on a system lifetime of 14 years. Sludge treatment costs include hauling to an off-site disposal area. The figure provided is the cost to own and operate the scrubbing system for 1975. 3. The $/kW figure is based upon the unit's maximum net generating capacity with the FGD system, 137 MW. 4. Unit load capacity factor for 1975 was 49.4%.
Detroit Edison St. Clair Plant No. 6 163 MW	Limestone Operational 5/76	14.996	92	2.139 MM	2.3	1. The total capital cost figure includes expenditures made through 1976. 2. Because of demonstration status, limestone preparation facilities are not required and a disposal pond capacity of 1 year is necessary. 3. Operating costs are estimates for operation during 1975 at a unit load factor of 65%.
Duquesne Light F.R. Phillips Station Nos. 1 to 6 410 MW	Lime Operational 7/73	40	103	32 MM	6.0	1. Total capital cost figure for Phillips includes expenditures of $32 million through 1975 and an additional $8 million required to bring the entire plant into compliance. The figure for Elrama includes expenditures of $34 million through 1975 and an additional $12 million required to bring the entire plant into compliance. 2. Total capital cost figures include all process equipment, engineering costs, contractor's fees and interest on capital during construction. Excluded are the costs of additional sludge disposal facilities that may be required. The $/kW values are based upon the station's net generating capacities with the scrubbers in service. The Phillips station net generating capacity is 387 MW. Elrama's net generating capacity is 494 MW. 3. Annual operating cost figures of 6 mills/kWh is based upon the combined operating costs for the Phillips and Elrama stations when full SO_2 compliance is achieved. This amounts to approximately $32 million.
Elrama Station Nos. 1 to 4 510 MW	Lime Operational 10/75	42	93			

Note: N/A indicates figures are not available.

COMPANY PLANT UNITS TOTAL CAPACITY, MW	PROCESS STATUS START-UP DATE	REPORTED CAPITAL COSTS,		REPORTED OPERATING COSTS,		COMMENTS
		$ MILLION	$/KW	$ ANNUAL	MILLS/KWH	
General Motors Chevrolet Parma Plant Nos. 1,2,3 & 4	Double Alkali Operational 3/74	3.2	100	643,500		1. Total capital cost figure includes all expenditures made on the system through 1975. 2. Annual cost figure is based upon the consumption of 55,000 tons/year of high sulfur (2.0 to 2.5%) eastern Ohio coal in the boilers. This equals approximately $11.70 per ton of coal consumed at the plant.
Gulf Power Scholz Steam Plant Nos. 1 & 2 23	Dilute Acid, Operational 2/75	3.0	130	N/A	N/A	1. The total installed capital cost figure provided for the CT-101 prototype unit includes the scrubbers and ancillary equipment, engineering costs and contractors fee. This figure is not representative of a full-scale application.
Gulf Power Scholz Steam Plant No. 2 20	Dry Adsorption Terminated 2/76	N/A	N/A	N/A	N/A	1. Actual cost figures for this prototype unit are not available. Foster Wheeler has published initial capital cost figures which range from $25 to $35 per kW for low sulfur removal efficiency and $70 to $75 per kW for high sulfur removal efficiency.
Illinois Power Wood River Power Station No. 4 110	Catalytic Oxidation Terminated 10/72	8.5	82.5	952,000		1. Reported capital cost figure represents the total expenditures during the 2.5 year duration of the program. 2. The $/kW figure is based upon the system's net generating capacity of 103 MW. 3. ESP cost is included since upstream fly ash removal is a necessary feature of this regenerable system. 4. The annual cost figure is an estimate representing system running costs only. Excluded are capital charges and a credit for product. This figure translates into a value of $3.46 per ton of coal consumed.

Note; N/A indicates figures are not available.

PEDCo ENVIRONMENTAL

COMPANY PLANT UNITS TOTAL CAPACITY, MW	PROCESS STATUS START-UP DATE	REPORTED CAPITAL COSTS,		REPORTED OPERATING COSTS,		COMMENTS
		$ MILLION	$/KW	$ ANNUAL	MILLS/KWH	
Indianapolis Power & Light Petersburg Generating Station No. 3 530	Limestone Construction 9/77	36.885	69.9			1. Capital cost figure includes the ESP's installed upstream for primary particulate control. 2. Interest during construction is not included. 3. FGD design and costs are based upon 4.5% sulfur coal, which is the maximum allowable for the system.
Kansas City Power & Light Hawthorn Power Station Nos. 3 & 4 525	Limestone Injection & Wet Scrubbing Operational 11/72	5.32	19		2.2-2.5	1. This figure is unrealistically low because these installations are experimental in nature and were heavily underwritten by the system supplier. 2. Sludge disposal facilities are not included in the total cost figure. 3. The annual operating cost figure does not include fixed costs.
Kansas City Power & Light La Cygne Power Station No. 1 820	Limestone Operational 2/73	52.4	63.9	1.79 MM	0.94	1. The capital cost figure includes $45.4 million in expenditures already made plus an additional $7 million required to reach optimum system performance ($5.2 million for the installation of an eighth scrubber module). 2. The annual operating cost figures are estimates for 1976 operations based upon extrapolation of first quarter figures provided by the utility. Included are operating labor and materials, maintenance labor and materials, and limestone.

Note: N/A indicates figures are not available.

COMPANY PLANT UNITS TOTAL CAPACITY, MW	PROCESS STATUS START-UP DATE	REPORTED CAPITAL COSTS,		REPORTED OPERATING COSTS,		COMMENTS
		$ MILLION	$/KW	$ ANNUAL	MILLS/KWH	
Kansas Power & Light Lawrence Energy Center Nos. 4 & 5 525 MW	Limestone Injection & Wet Scrubbing Operational 12/68 & 11/71	3.5	7	N/A	N/A	1. The capital cost figure presented represents a sum paid by the utility for both systems in 1968. Expenses incurred in many subsequent modifications over the years were largely underwritten by the system supplier. Therefore, the figures listed are unrealistically low and are not meaningful. 2. These units are now being replaced with venturi rod scrubber and spray tower systems. The total installed costs for these systems are not available.
Kentucky Utilities Green River Power Station Nos. 1 & 2 64	Lime Operational 9/75	3.996	62.44		2.0	1. The capital cost figure for this turnkey installation does not include the utility's expenditures for engineering, operator training, and other indirect cost factors.
Key West Utility Stock Island Power Plant 37	Limestone Operational 10/72	0.750	20.7		0.7	1. This system was jointly funded by the EPA and the utility. The system supplier has also underwritten a considerable amount of the capital expenditures. This figure, therefore, is unrealistically low. 2. The utility has had to pay for the cost of a new primary crushing system. 3. The operating cost figure provided was an original estimate and has not been corroborated or disputed by actual experience. This estimate was based upon the following factors: Capitalization rate of 10%; no taxes, no insurance. Maintenance cost of 5% of equipment cost. Labor cost at $20,000 per year. Limestone cost at $4.05 per ton.

Note: N/A indicates figures are not available.

COMPANY PLANT UNITS TOTAL CAPACITY, MW	PROCESS STATUS START-UP DATE	REPORTED CAPITAL COSTS,		REPORTED OPERATING COSTS,		COMMENTS
		$ MILLION	$/KW	$ ANNUAL	MILLS/KWH	
Louisville Gas & Electric Cane Run Power Station No. 4 178	Lime Operational 8/76	10	50	N/A	N/A	1. The total installed capital cost is an estimated figure that includes the costs for lime handling and sludge disposal facilities.
Louisville Gas & Electric Cane Run Power Station No. 5 183	Lime Operational 12/77	12	66			1. The total installed capital cost is an estimated figure that includes the costs for lime handling and sludge disposal facilities.
Louisville Gas & Electric Cane Run Power Station No. 6 277	Double Alkali Contract Awarded 2/79	16.3	58.9	7.3 MM		1. The total installed capital cost figure is an estimate provided by the utility. 2. The annual operating cost figure provided is an estimate for one year's service following the first three months of opertions. $4.5 million of this total will be subsidized by the EPA for technology research, development and report writing. This subsidy will not be utilized for any capital expenditures.
Louisville Gas & Electric Paddy Run Power Station No. 6 65	Lime Operational 4/73	3.7	57	905,000	2.5	1. The capital cost figures are based on the boiler rating minus system power consumption. The costs include everything except the final waste disposal site. This is a borrow pit supplied by the State highway department at no cost to the utility. 2. The operating costs provided has been derived by assuming a 60% unit 60 factor and a 15% fixed charge factor. 3. Cost of the carbide lime absorbent is confidential. 4. Costs are atypical because the unit is used for peak loads and the scrubber is a research and development tool for future full scale installations now operational, under construction or planned.
Minnkota Power Coop. M.R. Young Station No. 2 450	Fly Ash/Lime Construction 8/77	44	98			1. The total installed capital cost figure represents an estimated value for the unit's entire emission control system, including an upstream ESP for primary particulate control ($12 million). 2. The capital cost figure does not include the extensive sludge handling and disposal strategy proposed for this unit (vacuum filters and building, conveyor, by-pass equipment, trucks and front-end loaders.

Note; N/A indicates figures are not available.

COMPANY PLANT UNITS TOTAL CAPACITY, MW	PROCESS STATUS START-UP DATE	REPORTED CAPITAL COSTS,		REPORTED OPERATING COSTS,		COMMENTS
		$ MILLION	$/KW	$ ANNUAL	MILLS/KWH	
Montana Power Co. Colstrip Plant Nos. 1 & 2 716	Fly Ash/Lime Operational 10/75 & 7/76	32.663	45.32	1.185 MM	0.26	1. The total installed capital cost figure is an estimated value that includes the venturi scrubbers installed for particulate emissions control. 2. The annual operating cost figure is an estimated value that excludes fixed charges and solid waste disposal operations. 3. Capital charges were not available to be included in the figures provided. 4. The cost figures are presented in 1975 and 1976 dollars.
Montana Power Co. Colstrip Plant Nos. 3 & 4	Fly Ash/Lime Contract Awarded 7/80 & 7/81	N/A	N/A	N/A	N/A	1. Capital cost figures are currently not available for publication. The contract recently awarded to the system supplier is expected to exceed $50 MM for both units.
Nevada Power Co. Reid Gardner Station Nos. 1 & 2 250	Sodium Carbonate Operational 4/74	11	44	1.2 MM	N/A	1. The total installed capital cost figure is an estimate that was originally provided by the utility for expenditures completed by installation date (1974). Included are both scrubbing systems along with all the raw material handling and pond equipment cost. 2. The annual operating cost figure includes $600,000 annualized for each unit.
Northern Indiana Public Serv. D.H. Mitchell Station No. 11 115	Wellman-Lord Construction 1977	14.825	129	6.006 MM	8.1	1. The capital figure includes interest during construction and overhead charges. 2. Reported operating cost figure is a total annualized cost value that includes: Operation and maintenance costs. Anti-oxidant agent costs. Fixed charges are calculated a 10-15 year plant lifetime (26% of $14,825 MM). Assume an annual unit load factor of 73.5%. 3. All figures are reported in 1976 dollars.

Note: N/A indicates figures are not available.

COMPANY PLANT UNITS TOTAL CAPACITY, MW	PROCESS STATUS START-UP DATE	REPORTED CAPITAL COSTS,		REPORTED OPERATING COSTS,		COMMENTS
		$ MILLION	$/KW	$ ANNUAL	MILLS/KWH	
Northern States Power Sherburne County Generating Plant Nos. 1 & 2 1420	Limestone Operational, Construction 5/76 & 5/77	60	44	3.77 MM	0.37	1. The total installed capital cost figure includes direct costs only, indirect costs are excluded. 2. The total cost figure applies to 1975 installation and does not include escalation factors. 3. The annual operating cost figure includes both direct and indirect costs for 1976 operations. 4. The $/kW figure is based upon the net generating capacity of both units (680 MW/unit, 1360 MW total). 5. The cost of one redundant scrubber train is included. 6. The annual operating cost figure is estimated for 1977 operations at a capacity load factor of 80%.
Pacific Power & Light Idaho Power Company Jim Bridger Plant No. 3	Sodium Contract Awarded 9/79	50-60 MM	110-120			1. The total installed capital cost figures provided are estimated values. 2. The system will be comprised of 3 parallel absorption towers each handling 30.3% of the flue gas capacity. 3. The reagent, a nominal 30 wt. % Na_2CO_3 purge solution, will be purchased from a local soda ash manufacturer.

Note: N/A indicates figures are not available.

COMPANY PLANT UNITS TOTAL CAPACITY, MW	PROCESS STATUS START-UP DATE	REPORTED CAPITAL COSTS,		REPORTED OPERATING COSTS,		COMMENTS
		$ MILLION	$/KW	$ ANNUAL	MILLS/KWH	
Pennsylvania Power Bruce Mansfield Plant Nos. 1 & 2 1670	Lime Operational, Construction 4/76 & 4/77	213.200	127.66	10.344 MM	2.7	1. All cost figures presented are estimates provided by the utility. 2. The total installed capital cost figure includes all direct and indirect costs plus escalation factors. 3. The cost of the venturi scrubbers required for particulate emission control are included. 4. The cost of one redundant scrubbing train is included. 5. The annual operating cost, calculated in mills/kWh, is based upon a 90% unit capacity factor. 6. Indirect costs are not included in the annual operaing cost total. 7. All cost figures are reported in 1975 and 1977 dollars.
Philadelphia Electric Eddystone Generating Unit No. 1A 316	Magnesium Oxide Operational 9/75	20.273	64	N/A	N/A	1. The total installed capital cost figure is a 1972 estimated value, devoid of any escalation factors. 2. Total direct and indirect costs include the three first stage particulate scrubbers and one second stage SO_2 absorber. Also included are the SO_2 recovery equipment at the plant, site improvements, and access roads, engineering and contractor's fees and interest on capital during construction. 3. The costs for the magnesium oxide regenerating facilities are not included in the total cost figure.

Note: N/A indicates figures are not available.

PEDCo ENVIRONMENTAL

COMPANY PLANT UNITS TOTAL CAPACITY, MW	PROCESS STATUS START-UP DATE	REPORTED CAPITAL COSTS,		REPORTED OPERATING COSTS,		COMMENTS
		$ MILLION	$/KW	$ ANNUAL	MILLS/KWH	
Potomac Electric Power Dickerson Station No. 3 190	Magnesium Oxide Terminated 9/73	6.5	68	990,000	N/A	1. The total installed capital cost figure is an estimate provided by the utility in 1973. 2. This figure does not include regeneration and acid plant costs. 3. The operating cost figure is an estimate provided for 1974 operations. This figure includes operation and maintenance costs and acid plant freight and operation charges. Not included in this figure are fixed charges, utility charges, project management and engineering costs.
Public Service of New Mexico San Juan Station Nos. 1 & 2 715	Wellman Lord Construction 7/77	89.510	127.87	7.236 MM	5.0	1. The total installed capital cost figure is an es-mated value that applies to 1977 installation. Included are all direct and indirect costs plus an escalation factor. 2. The $/kW figure is based on a net generating capacity of 700 MW. 3. The costs of the venturi scrubbers for particulate removal are included in the total cost figure. 4. The cost of one redundant scrubber train is included. 5. The annual operating costs and the mills/kWh value derived are estimated for 1978 operations and based upon a capacity factor of 77%. 6. No credit is allowed for by-product recovery (this includes both the elemental sulfur product and the sodium sulfate purge product for use in pulp and paper processes.

Note: N/A indicates figures are not available.

PEDCo ENVIRONMENTAL

COMPANY PLANT UNITS TOTAL CAPACITY, MW	PROCESS STATUS START-UP DATE	REPORTED CAPITAL COSTS,		REPORTED OPERATING COSTS,		COMMENTS
		$ MILLION	$/KW	$ ANNUAL	MILLS/KWH	
Rickenbacker AFB Rickenbacker Nos. 1 to 7 20	Lime Operational 3/76	2.2	110	N/A	N/A	1. The total installed capital cost figure includes adjacent electrical costs, sludge disposal facility costs, external flue work costs, and other non-typical equipment costs. 2. Figures are reported in 1976 dollars.
Salt River Project Coronado Station Nos. 1 & 2 700 MW	Limestone Contract Awarded 4/79 & 4/80	N/A	N/A	N/A	N/A	1. The contracts for the ESP and scrubbing system have just been recently awarded. Actual capital cost figures have not yet been determined. The combined cost of these two new power-generating facilities, including emission control, is estimated at 685 MM.
South Carolina Public Service Winyah Generating Station No. 2 280	Limestone Construction	6.189	24.35			1. Fifty percent of the boiler's flue gas will be scrubbed for SO_2 removal. SO_2 removal efficiency is 69%. 2. The total installed capital cost figure is an estimated value. 3. Total direct and indirect costs for the ESP provided for primary particulate control upstream of the scrubbers are included. 4. Sludge handling and disposal facilities, utilities and services costs, interest on capital during construction, and contractor's fees are not included in the total installed cost figure.
Southern Mississippi Power R.D. Morrow Generating Plant Nos. 1 & 2 360	Limestone Construction 11/77 & 6/78	18.847	52.35			1. The total installed capital cost figure is an estimate that applies to 1975 installation dates. 2. Included in the cost figure are the ESP's, scrubbers and ancillary equipment, fans, construction field expenses, and interest during construction. 3. Sludge handling and disposal facilities are not included in the total cost figure.

Note: N/A indicates figures are not available.

PEDCo ENVIRONMENTAL

COMPANY PLANT UNITS TOTAL CAPACITY, MW	PROCESS STATUS START-UP DATE	REPORTED CAPITAL COSTS,		REPORTED OPERATING COSTS,		COMMENTS
		$ MILLION	$/KW	$ ANNUAL	MILLS/KWH	
Tennessee Valley Authority Widows Creek Steam Plant No. 8 550	Limestone construction 3/77	56.284	102.33	5.226 MM	1.72	1. The total installed capital cost figure is an estimate that includes all expenditures made by February 1977. 2. Included in the total intalled figure are the costs of the existing ESP and venturi scrubbers for control of particulate emissions, plus all direct and indirect costs, and escalation. 3. Sludge handling and disposal facilities are not included in the above estimate. 4. The annual operating cost figure is an estimate that applies to operation in 1977. 5. The annual operating cost estimate includes particulate removal costs. Amortization of investment is not included. 6. The mills/kWh figure derived from is the total annual cost estimates (direct and indirect) at a unit capacity facto. of 63%.
Utah Power & Light Emery Plant No. 1 400	Lime Letter of Intent 6/78	29.0	72.5			1. The total installed capital cost is a preliminary estimate that includes the cost of the scrubbers and ancillary equipment, lime and sludge handling and disposal equipment. 2. No water is returned to the process from the settling pond. 3. A part of the flue gas will be by-passed for reheat requirements.
Utah Power & Light Huntington Plant No. 1 415 MW	Lime Construction 6/77	26	62.65			1. The total installed capital cost is a preliminary estimate that incldues the cost of the scrubbers and ancillary equipment, lime handling and sludge handling and disposal equipment.

Note: N/A indicates figures are not availabe.

COMPANY PLANT UNITS TOTAL CAPACITY, MW	PROCESS STATUS START-UP DATE	REPORTED CAPITAL COSTS,		REPORTED OPERATING COSTS,		COMMENTS
		$ MILLION	$/KW	$ ANNUAL	MILLS/KWH	
Wisconsin Power & Light Columbia Plant No. 2 527	Lime/Limestone Requesting/ Evaluating Bids 1/80	30	57	4.2 MM		1. The total installed capital cost figure is a preliminary estimate that includes the scrubbers and ancillary equipment, erection, disposal piping and basin area. 2. Sludge handling and disposal equipment and the upstream ESP are not included in this figure. 3. The operating cost figures provided are estimated values.

Note: N/A indicates figures are not available.

APPENDIX C

FGD PROCESS FLOW DIAGRAMS

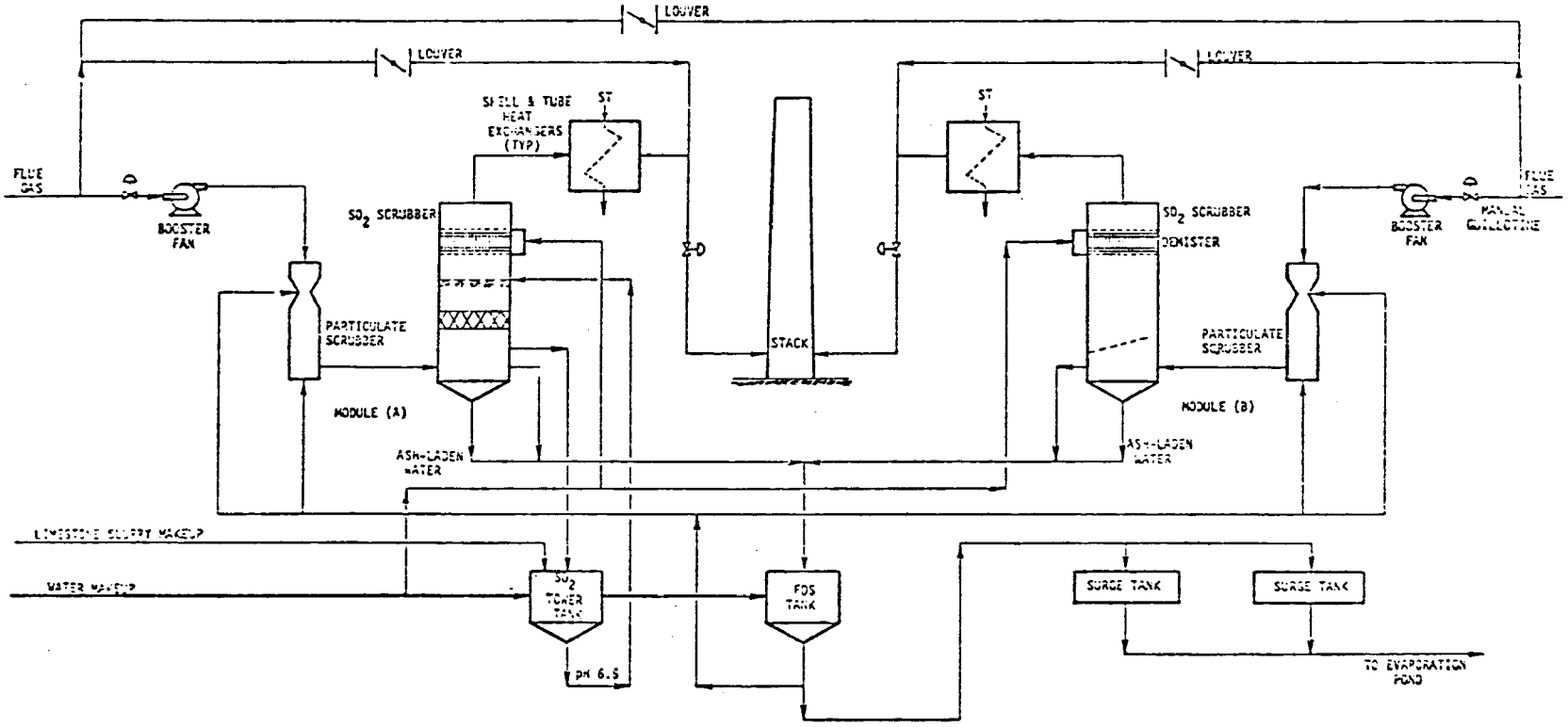

Figure 1. Cholla No. 1 FGD System: General Flow Diagram.

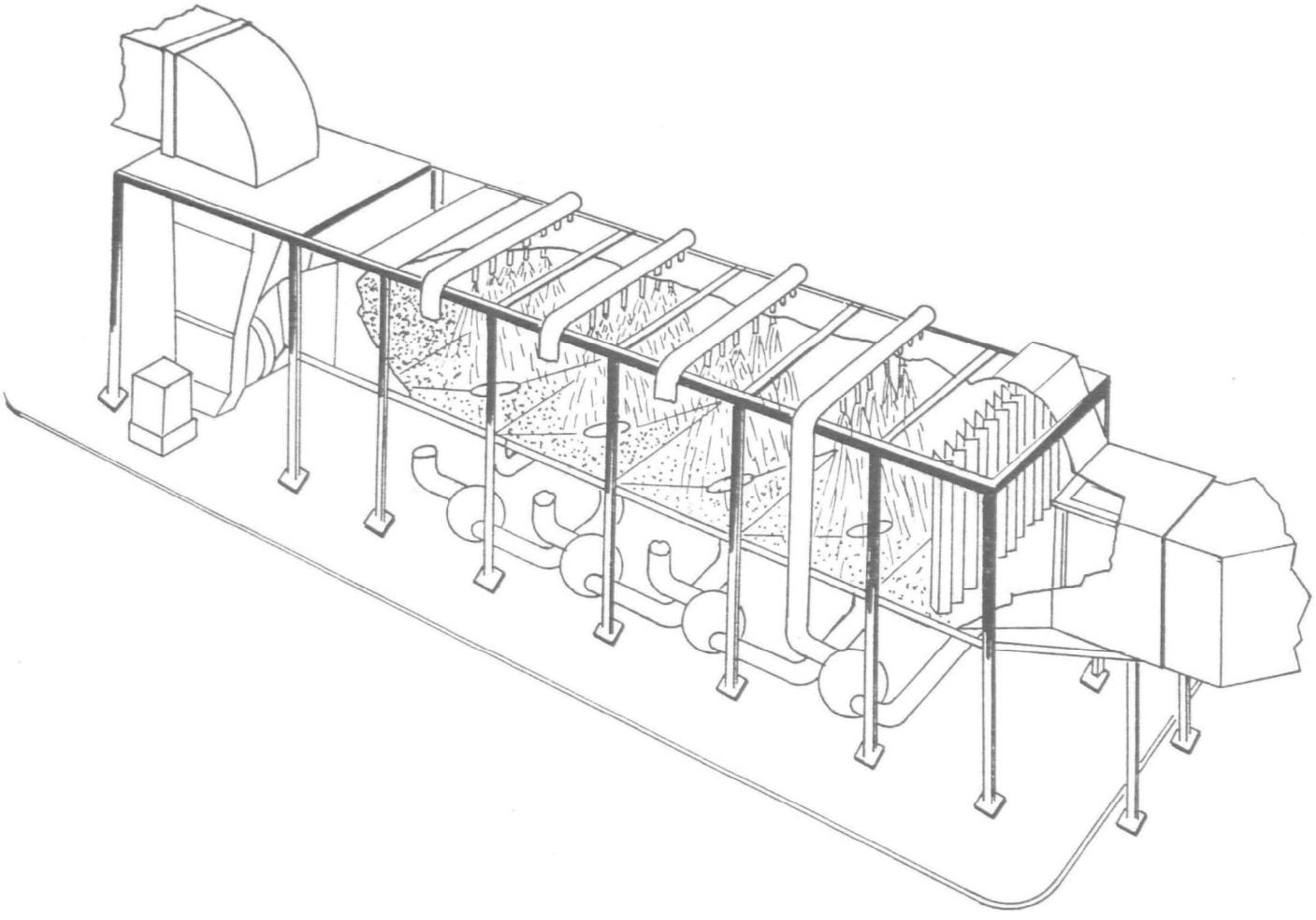

Figure 2. Four Corners Prototype Scrubber Module: Cross Section Diagram.

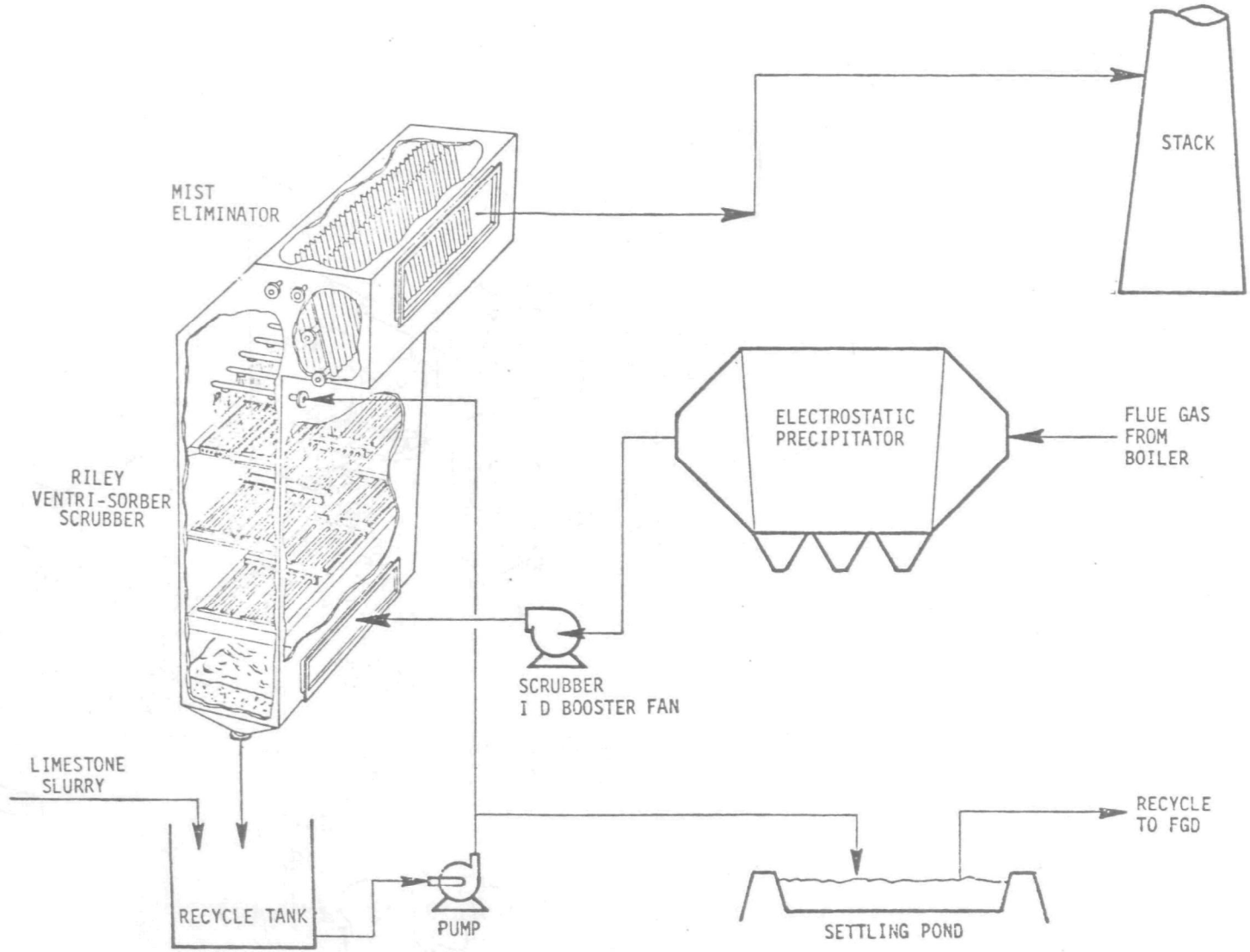

Figure 3. Simplified Process Diagram of the Duck Creek No. 1 FGD Module.

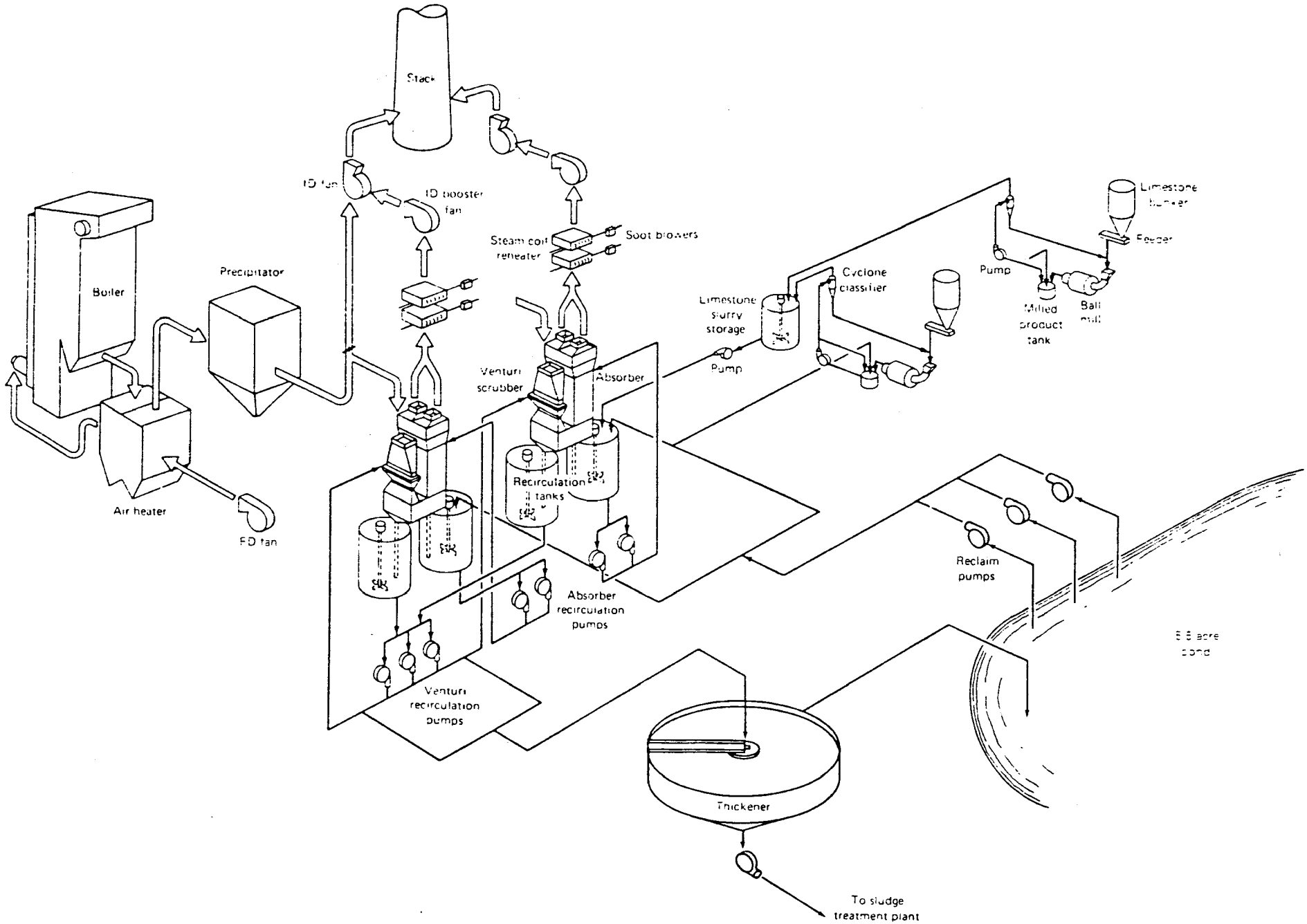

Figure 4. Will County No. 1 FGD System: General Process Diagram.

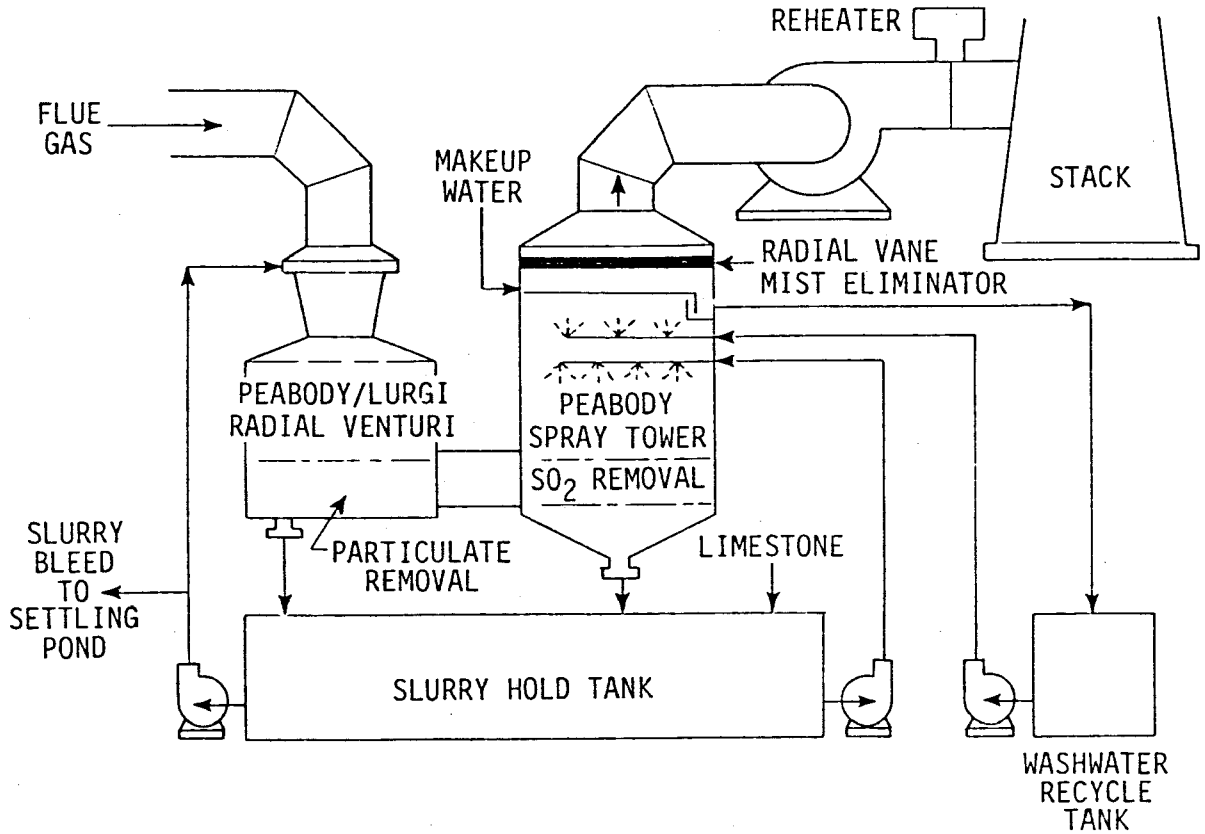

Figure 5. St. Clair No. 6 FGD System: General Process Diagram.

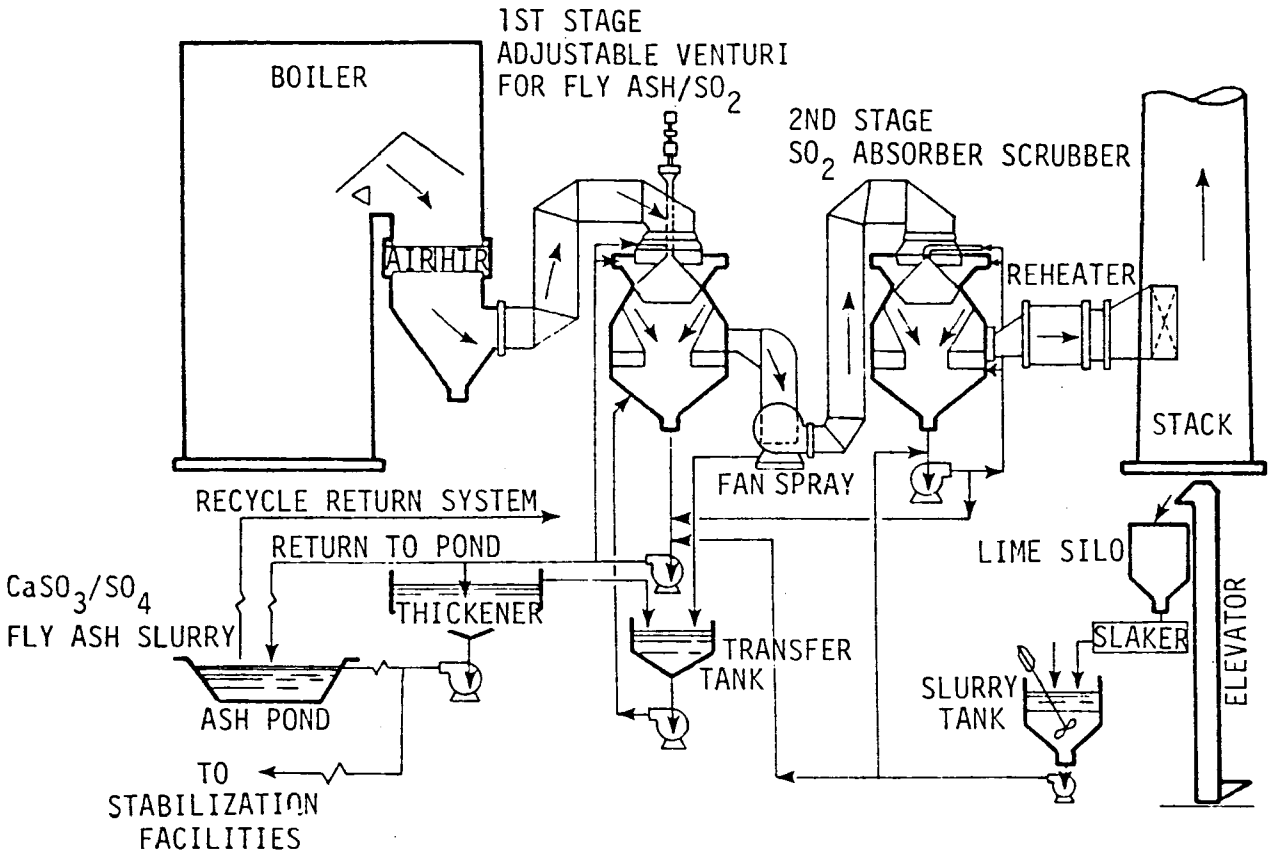

Figure 6. F. R. Phillips FGD System: General Process Diagram.

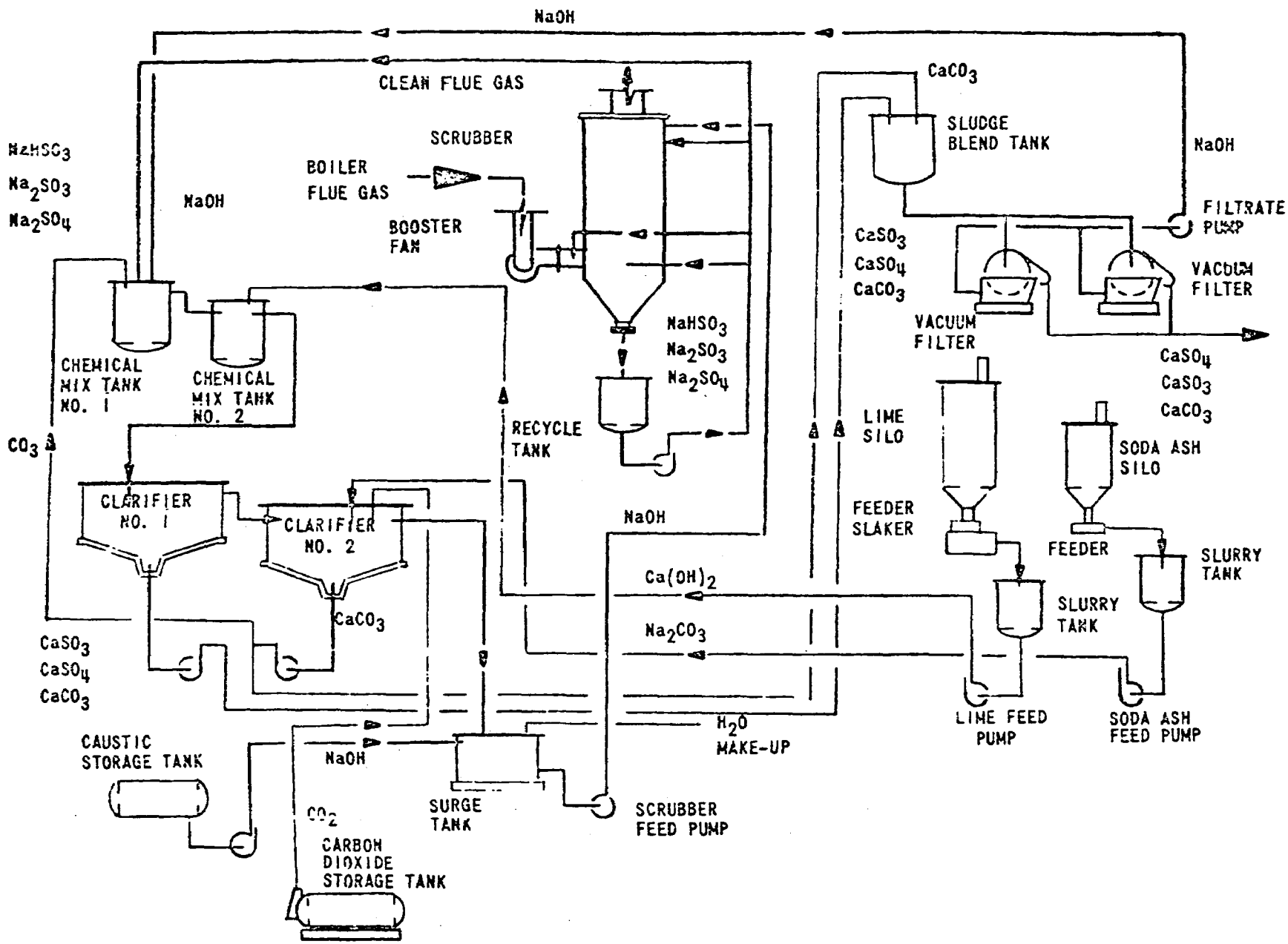

Figure 7. General Motors Chevrolet Parma Plant: General Process Flow Diagram.

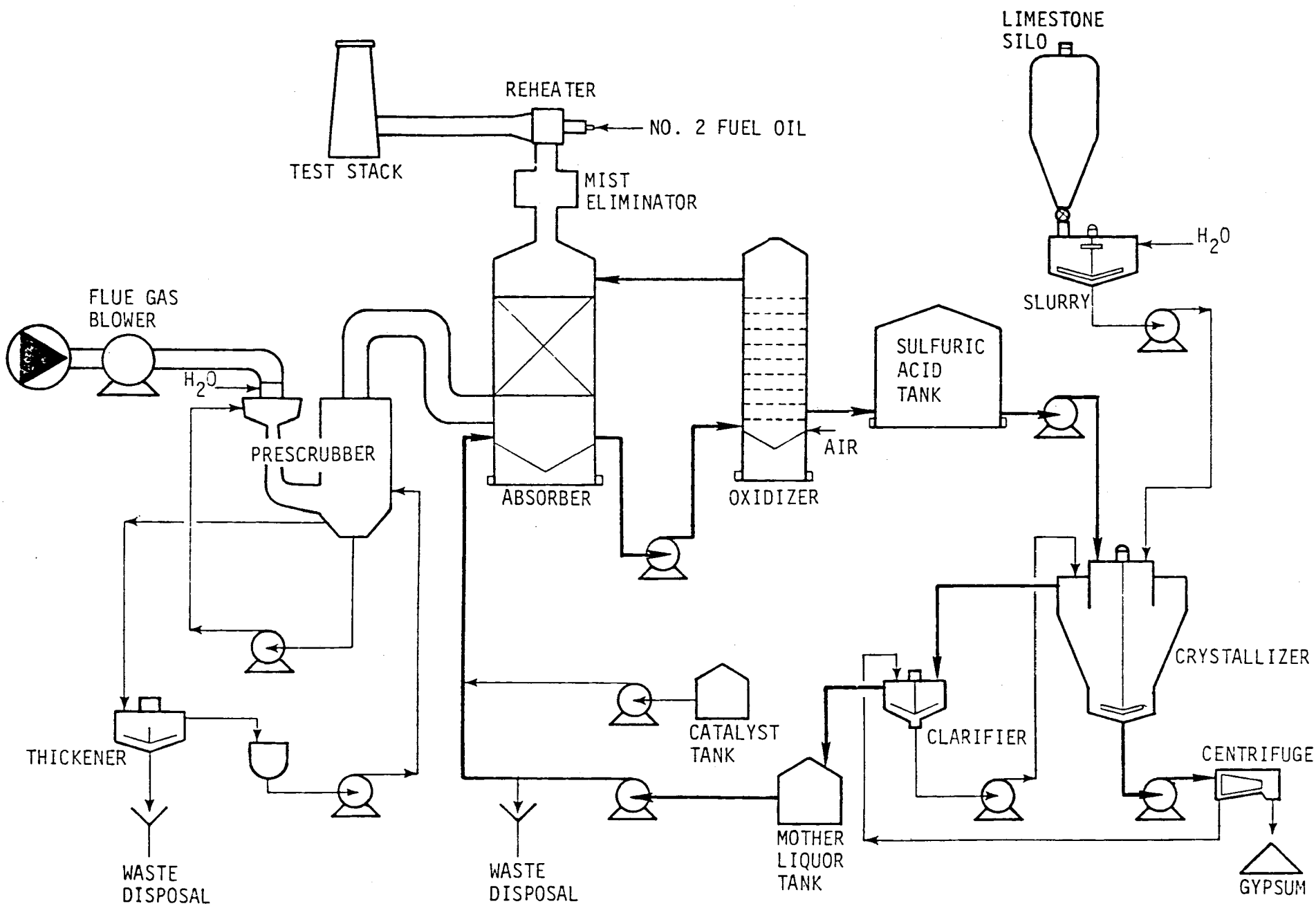

Figuare 8. Chiyoda Thoroughbred 101 FGD Prototype: General Process Diagram.

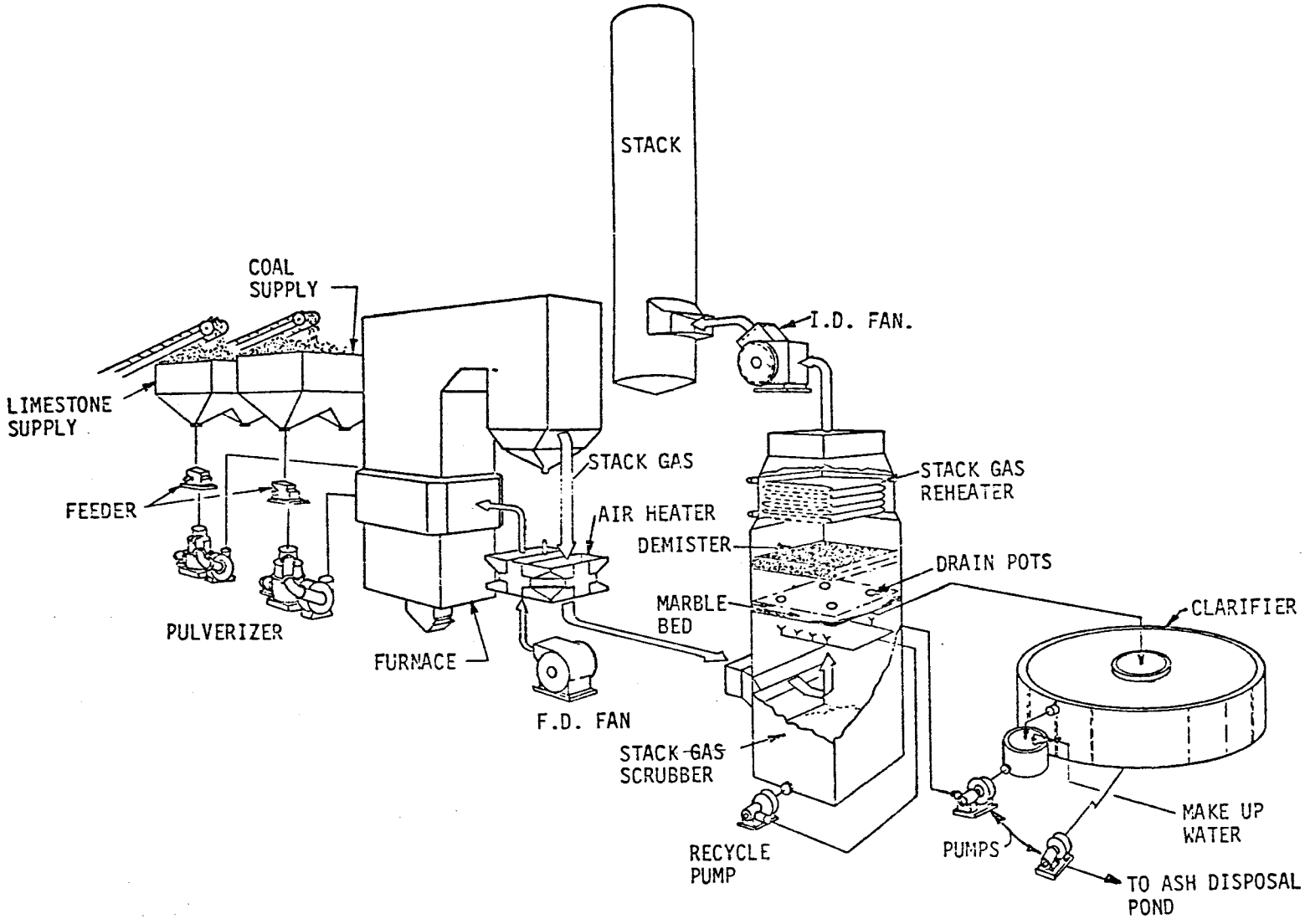

Figure 9. Hawthorn No. 3 FGD System: General Process Diagram.

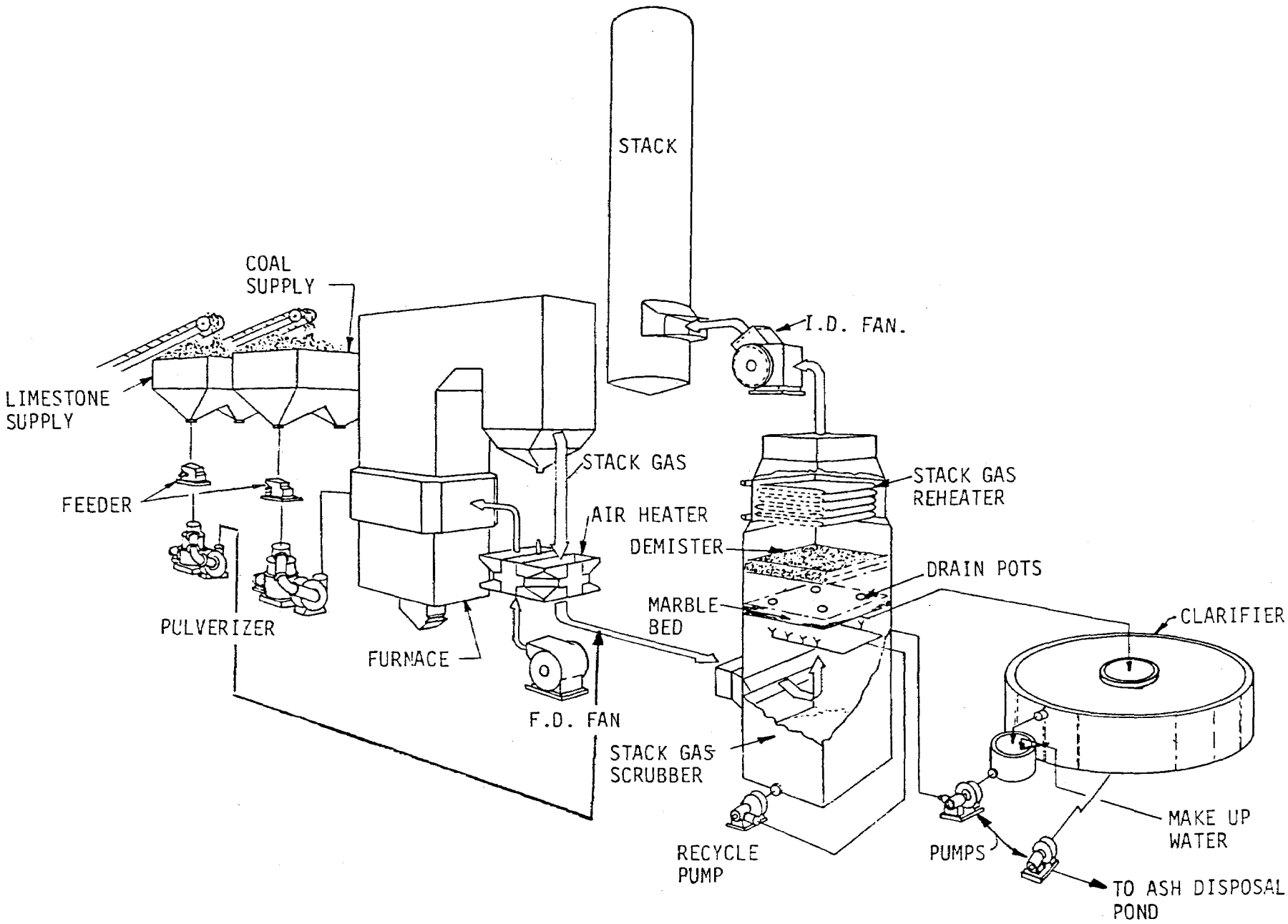

Figure 10. Hawthorn No. 4 FGD System: General Process Diagram.

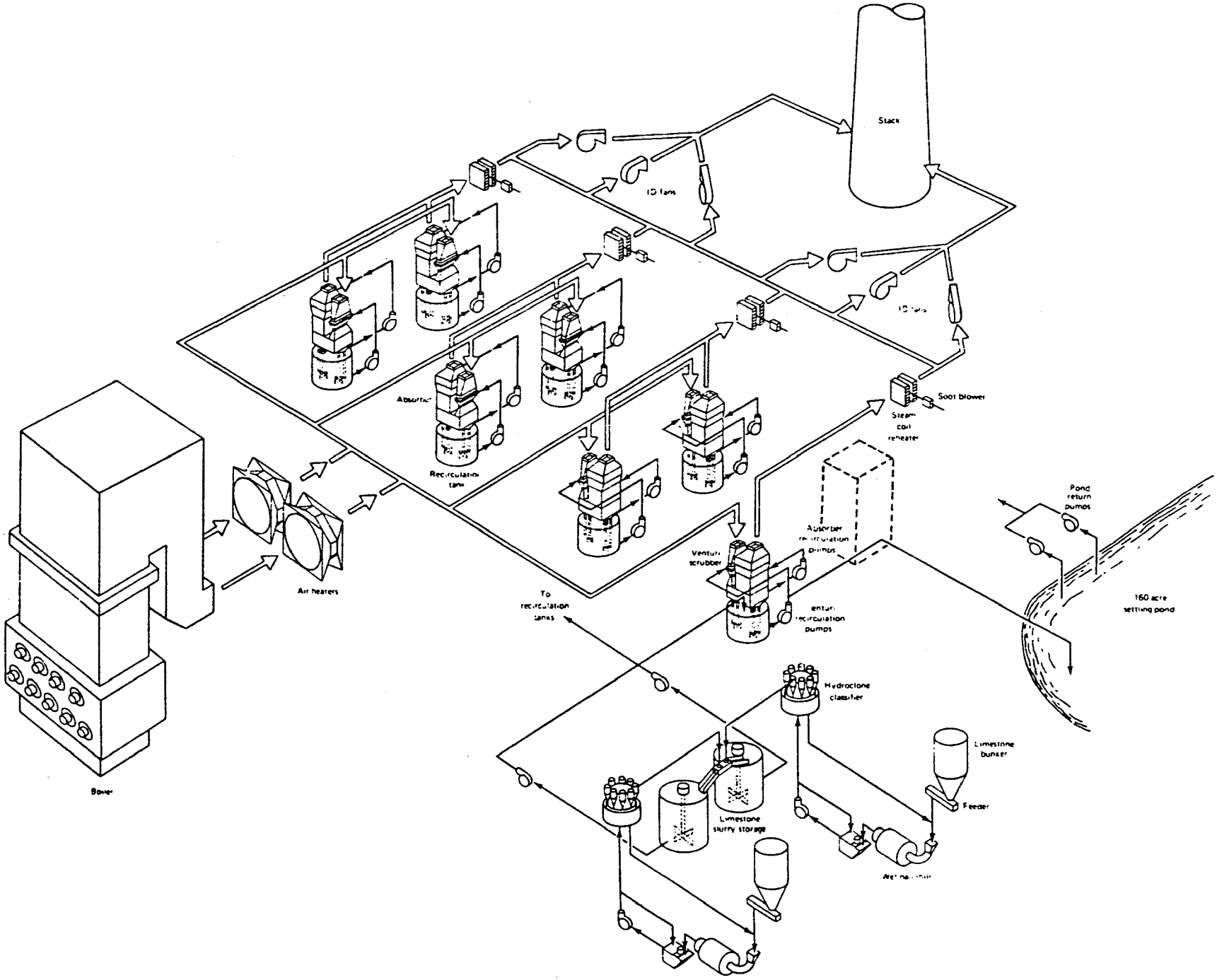

Figure 11. La Cygne No. 1 FGD System: General Process Diagram.

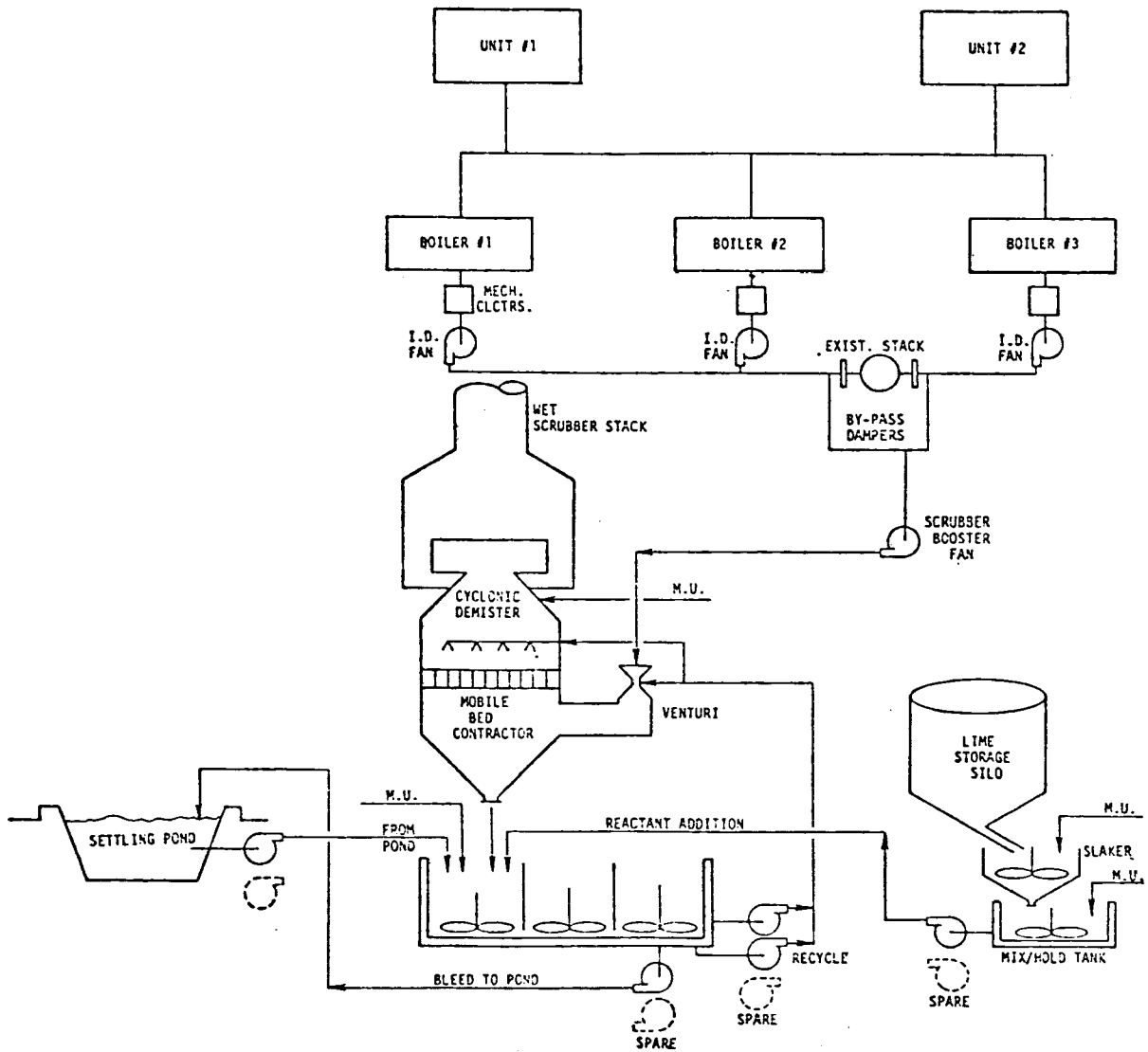

Figure 12. Green River FGD System: General Process Diagram.

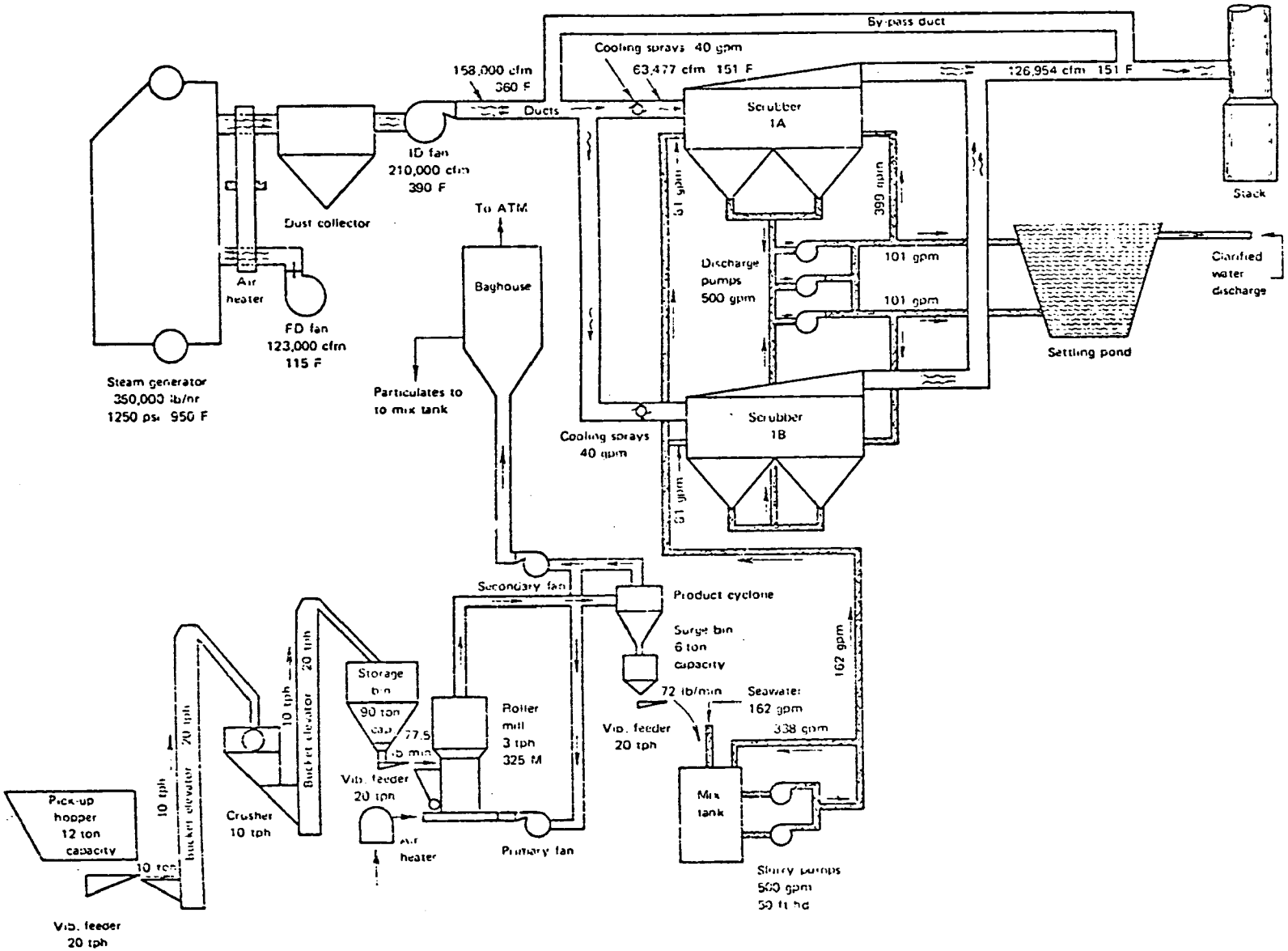

Figure 13. Stock Island Plant FGD System: Process Flow Diagram.

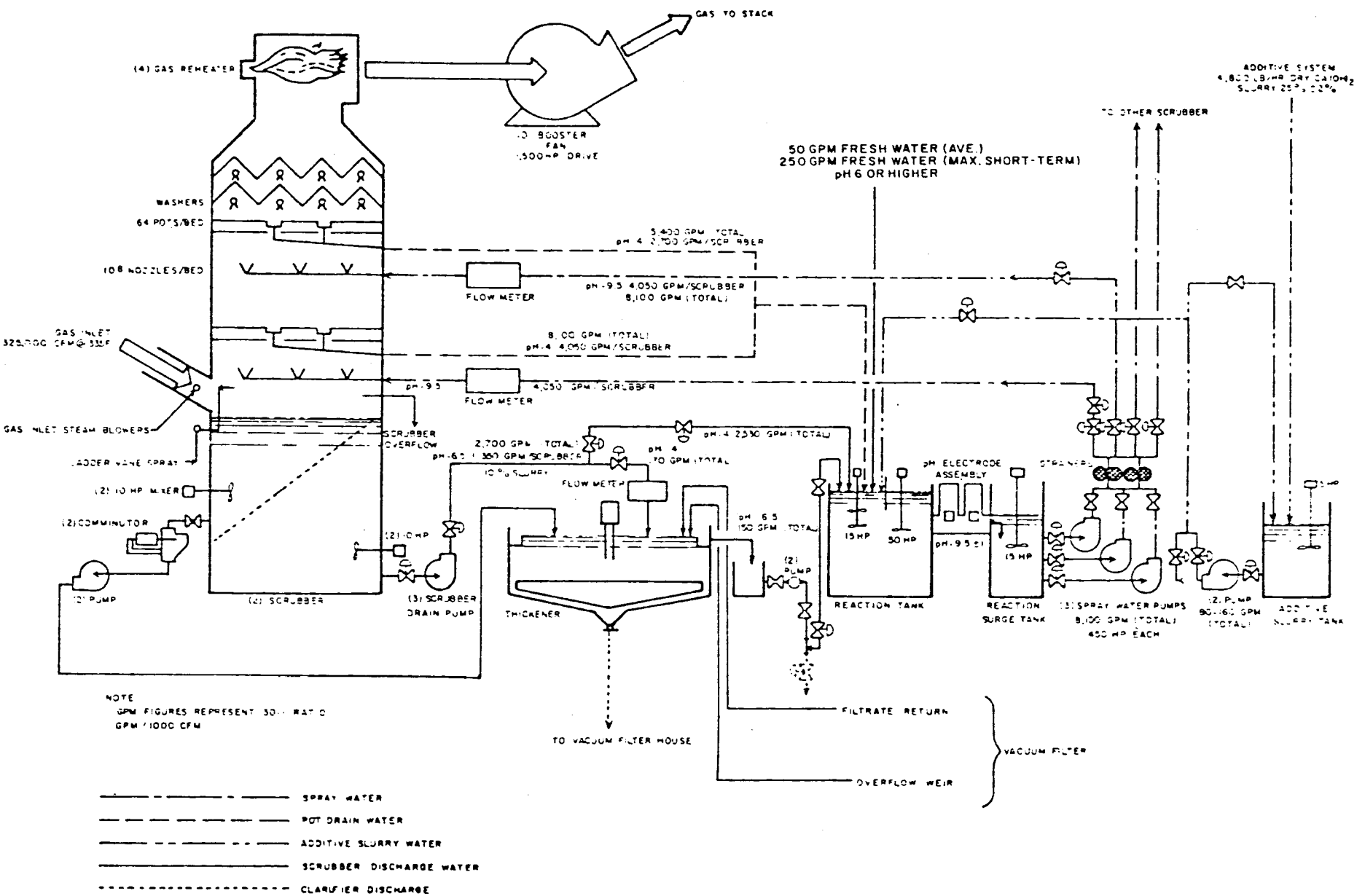

Figure 14. Paddys Run No. 6 FGD System: Process Flow Diagram.

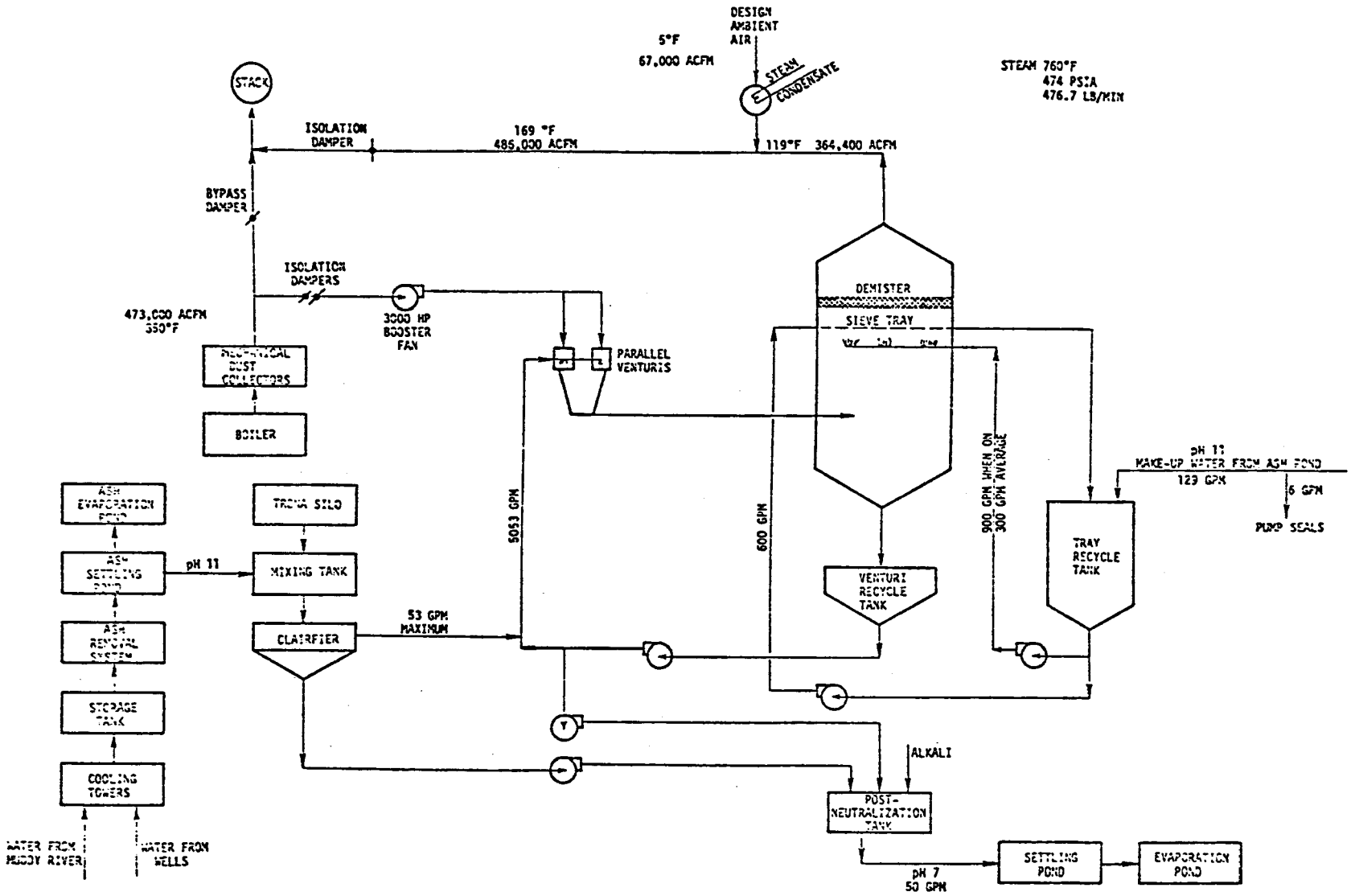

Figure 15. Reid Gardner FGD Systems, Units 1, 2, and 3: General Process Diagram.

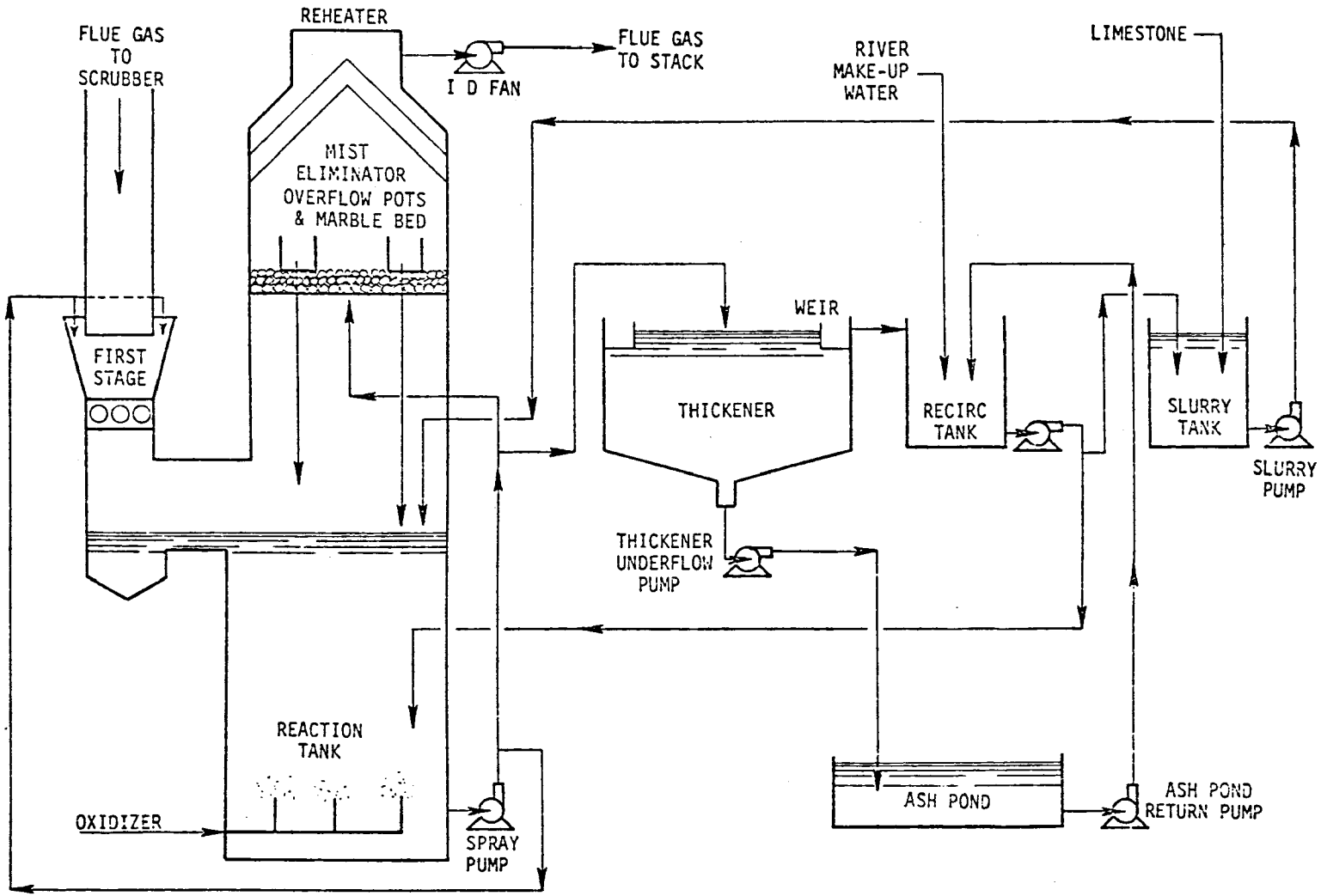

Figure 16. Sherburne No. 1 FGD System: Simplified Process Diagram.

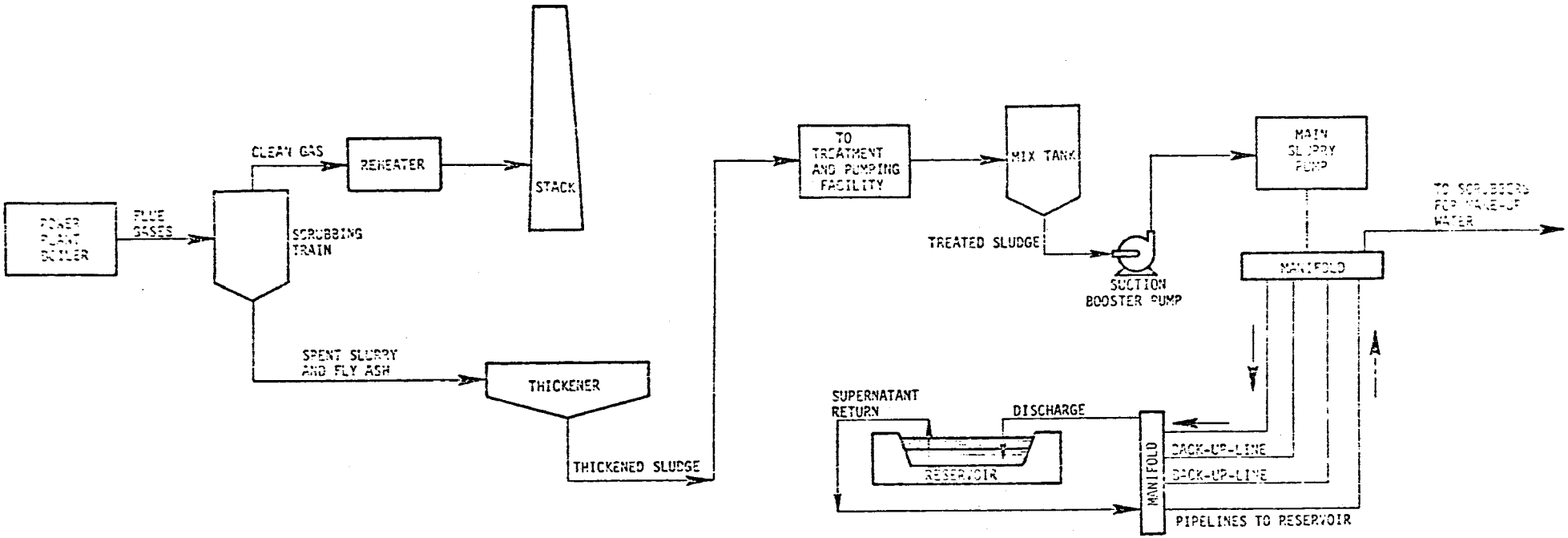

Figure 17. Bruce Mansfield No. 1 FGD System: Simplified Process Diagram.

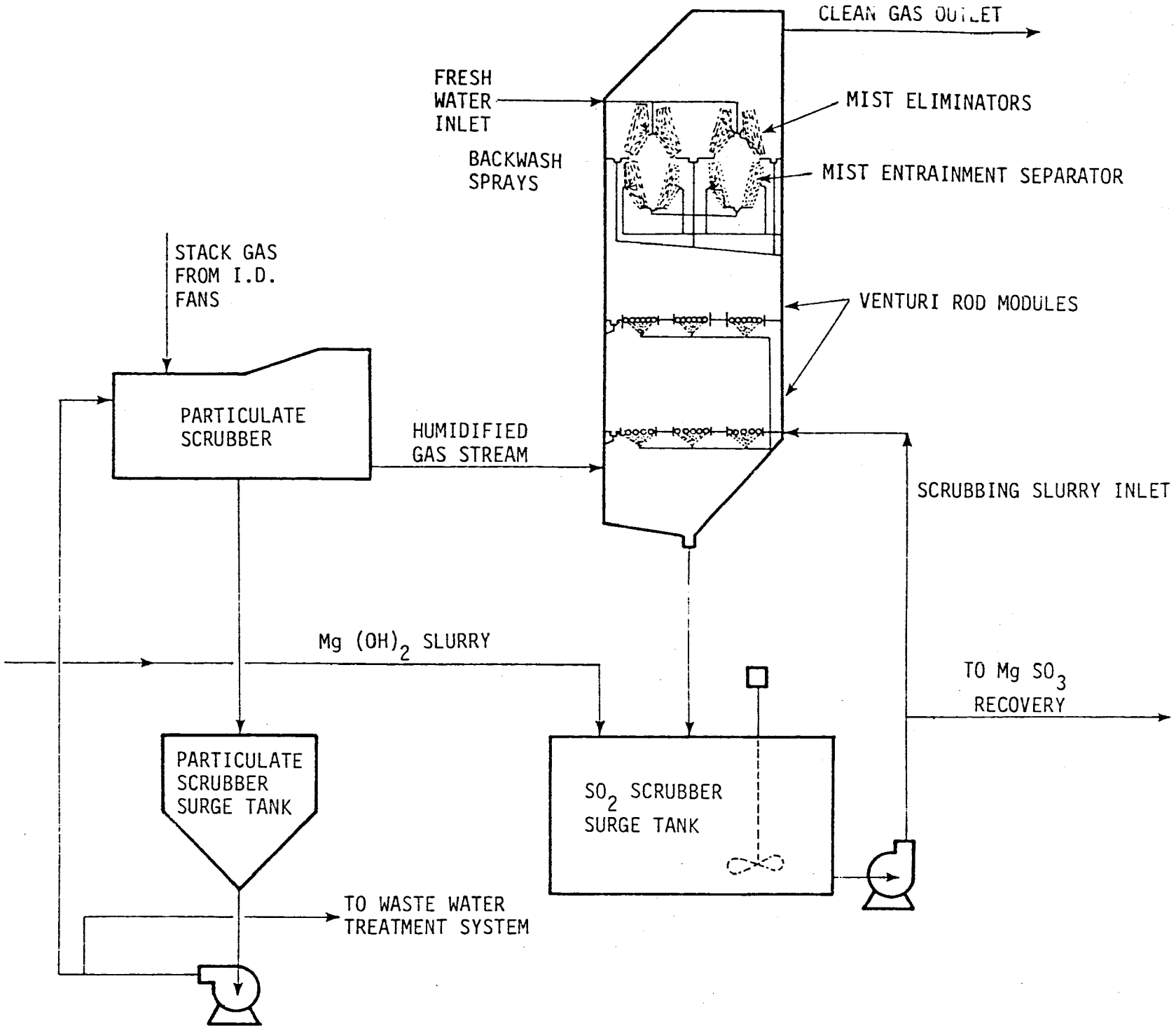

Figure 18. Eddystone No. 1 FGD System: General Process Diagram.

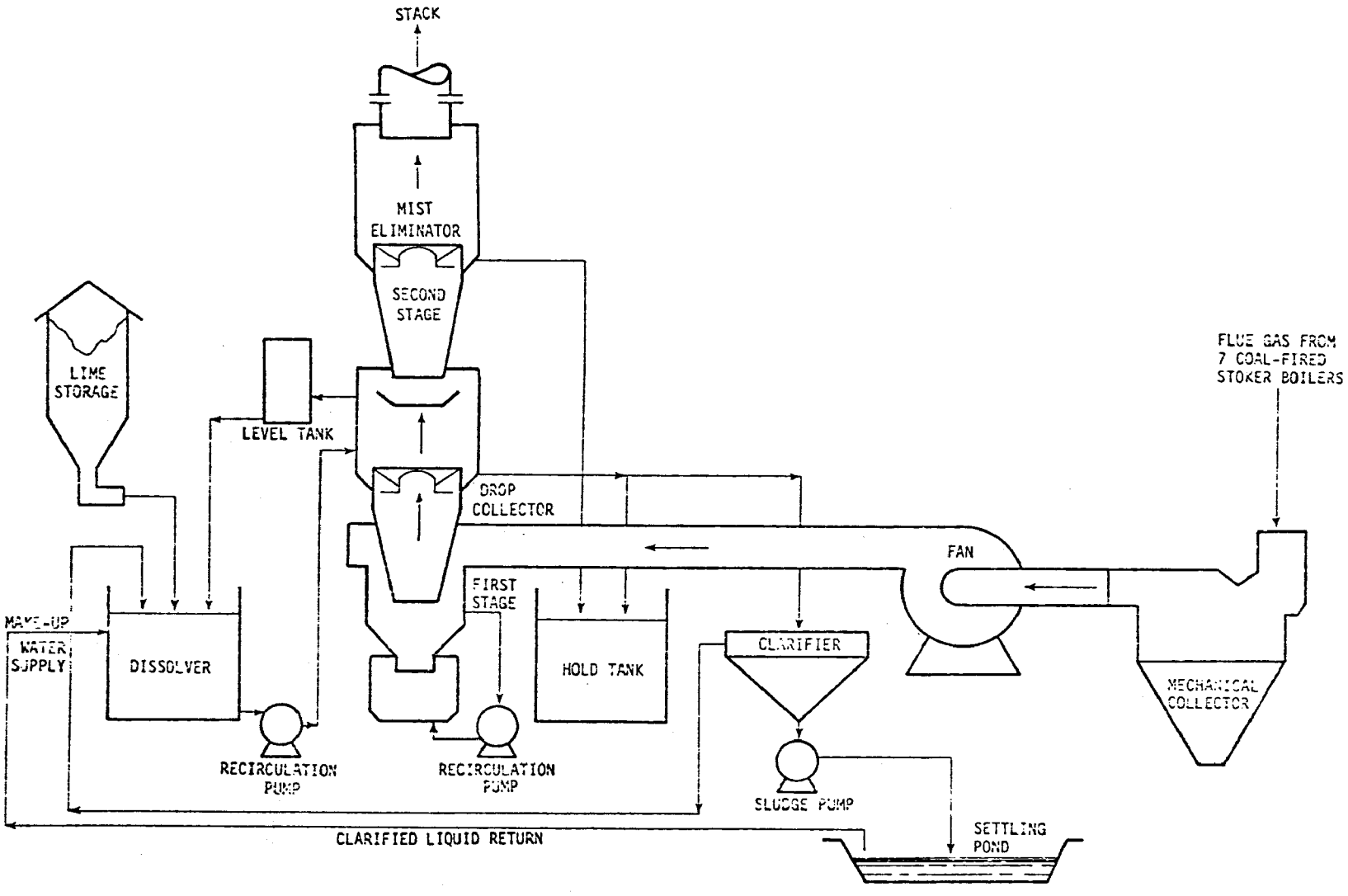

Figure 19. Rickenbacker FGD System: General Process Diagram.

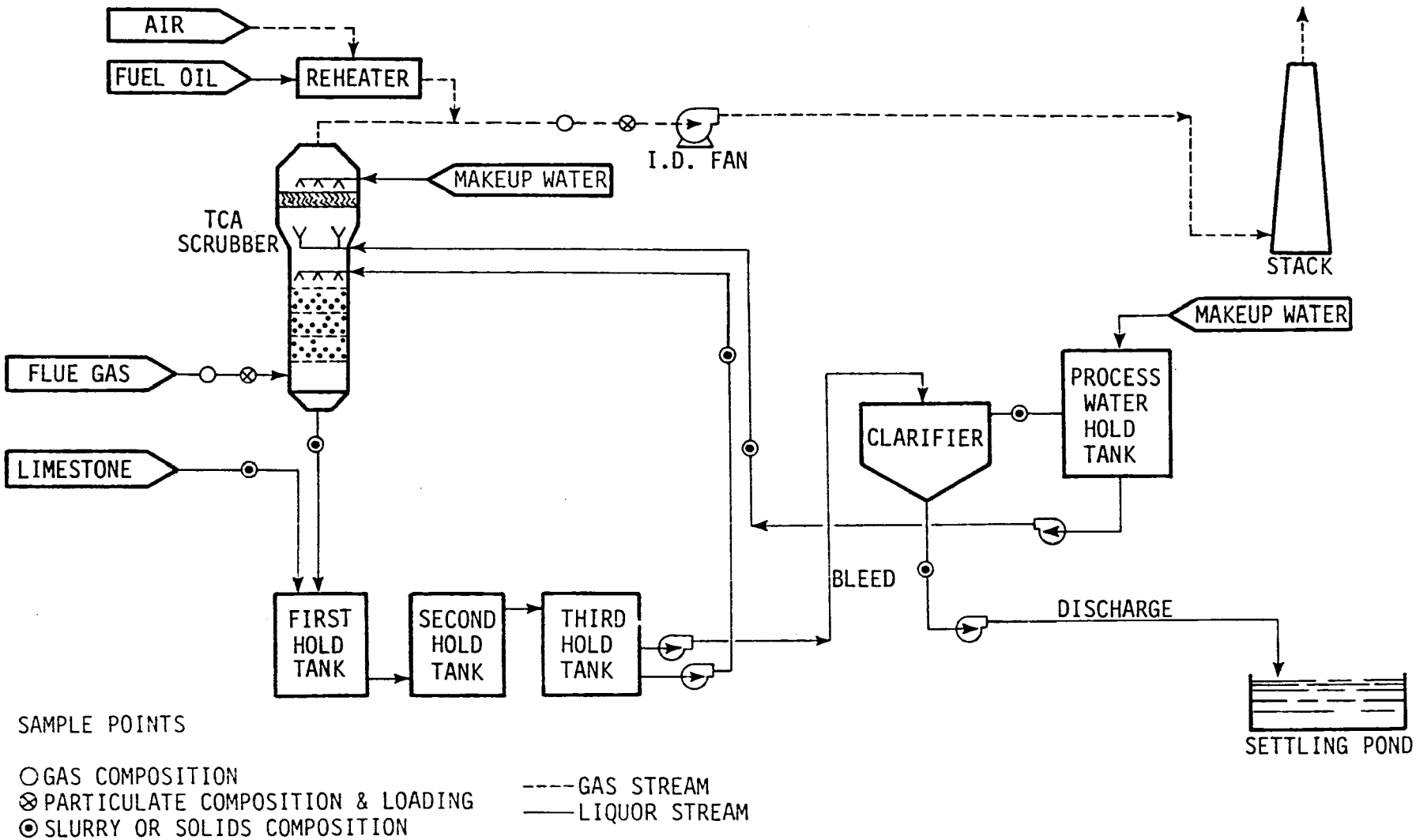

Figure 20. Shawnee No. 10 Prototype Test Unit: General Process Diagram.

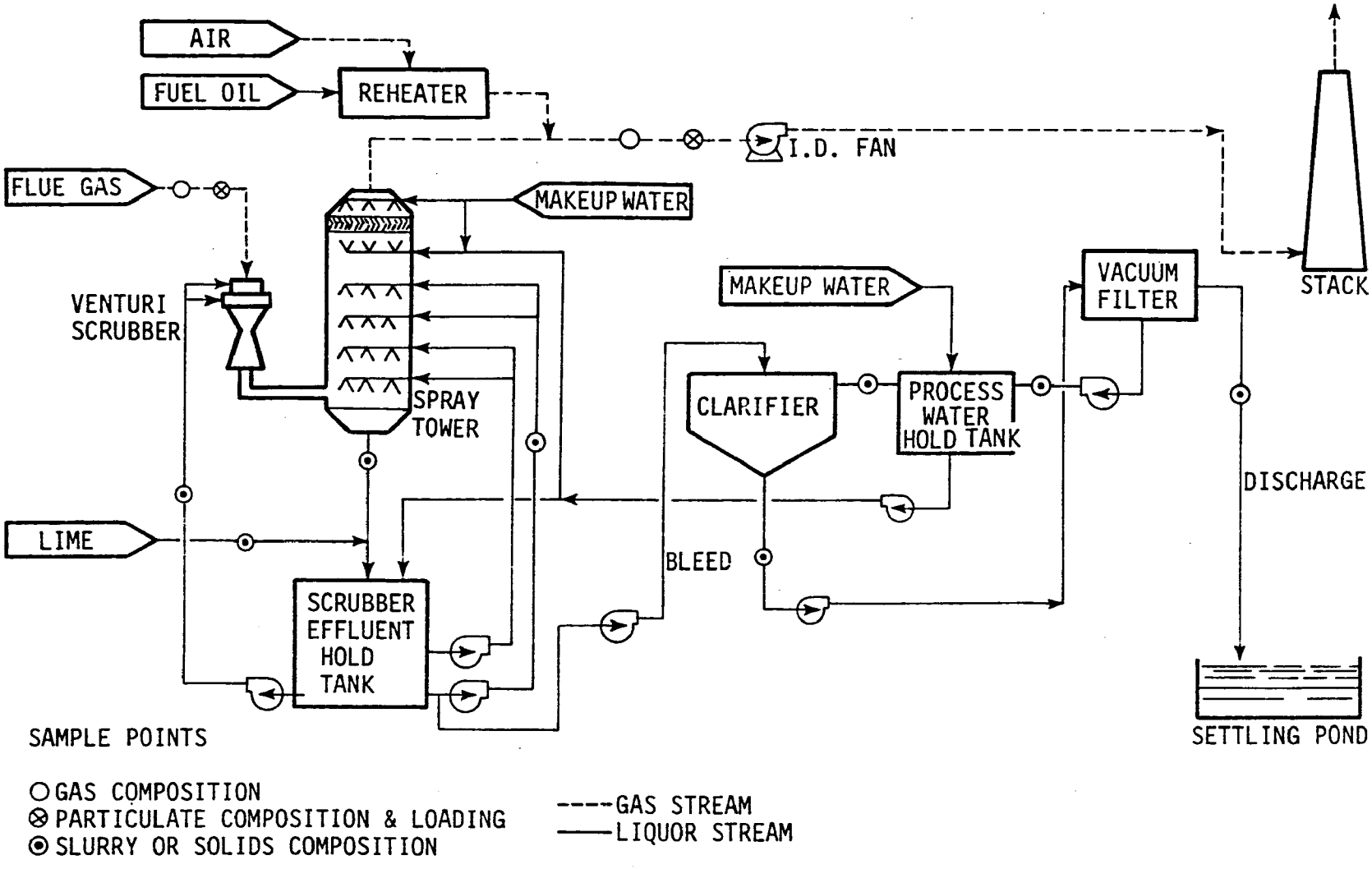

Figure 21. Shawnee No. 10 Prototype Test Unit: General Process Diagram.

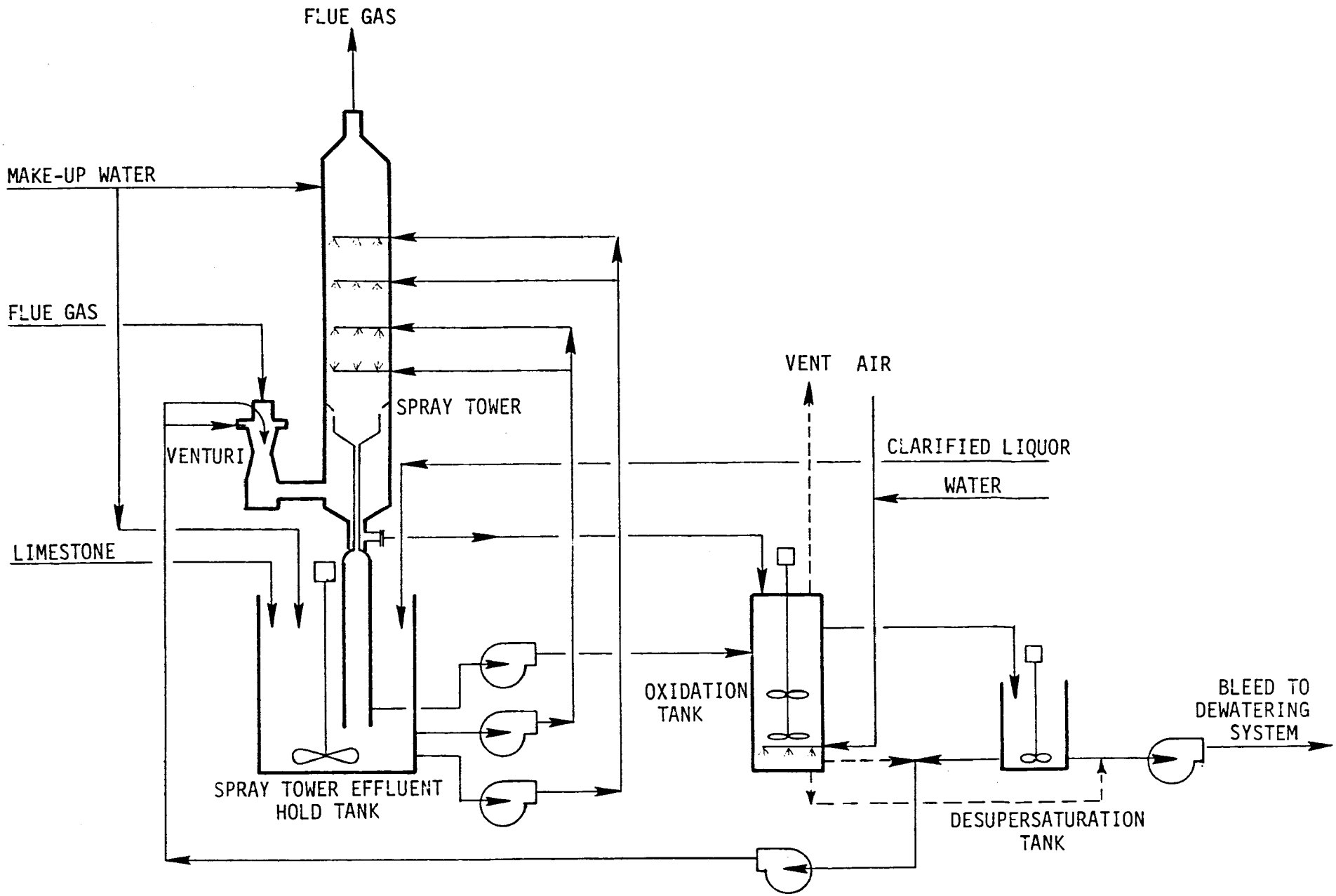

Figure 21A. Shawnee No. 10 Prototype Test Unit: Modified Ventui/Spray Tower System for 2-Stage Oxidation Testing.

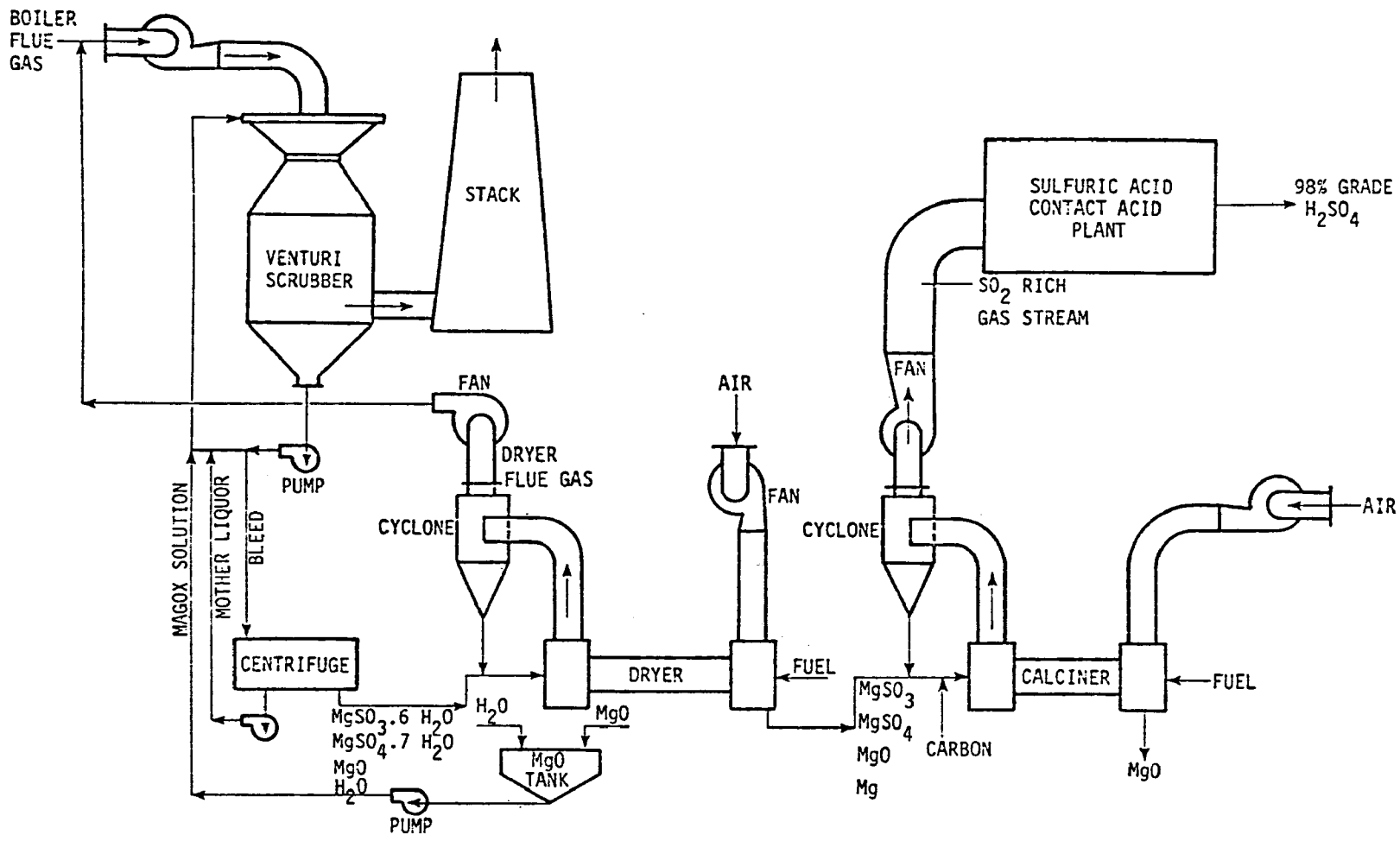

Figure 22. Mystic No. 6 FGD System and Essex Chemical Plant Regeneration Facility: Schematic Flow Diagram.

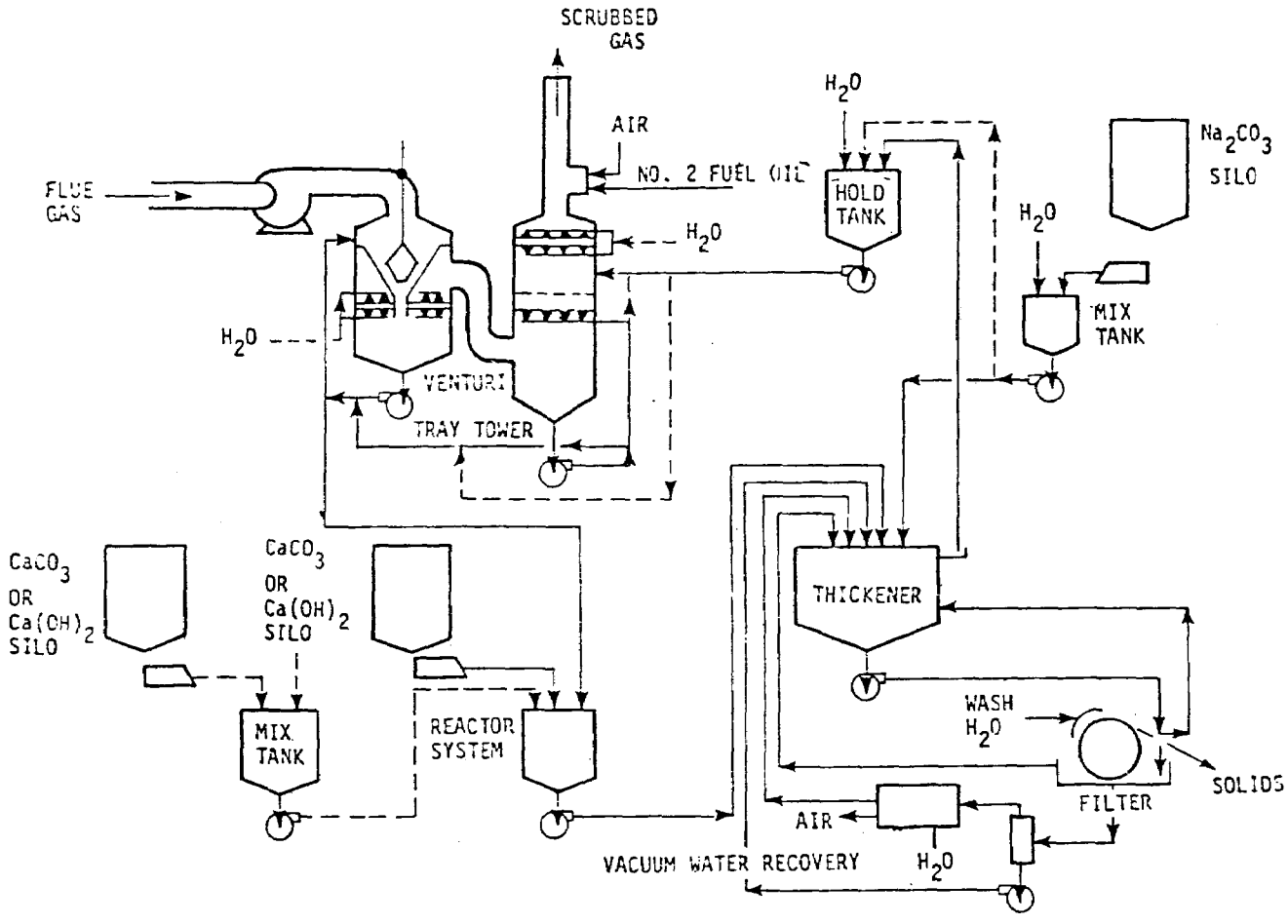

Figure 23. CEA/ADL Dual Alkali Prototype: General Process Diagram.

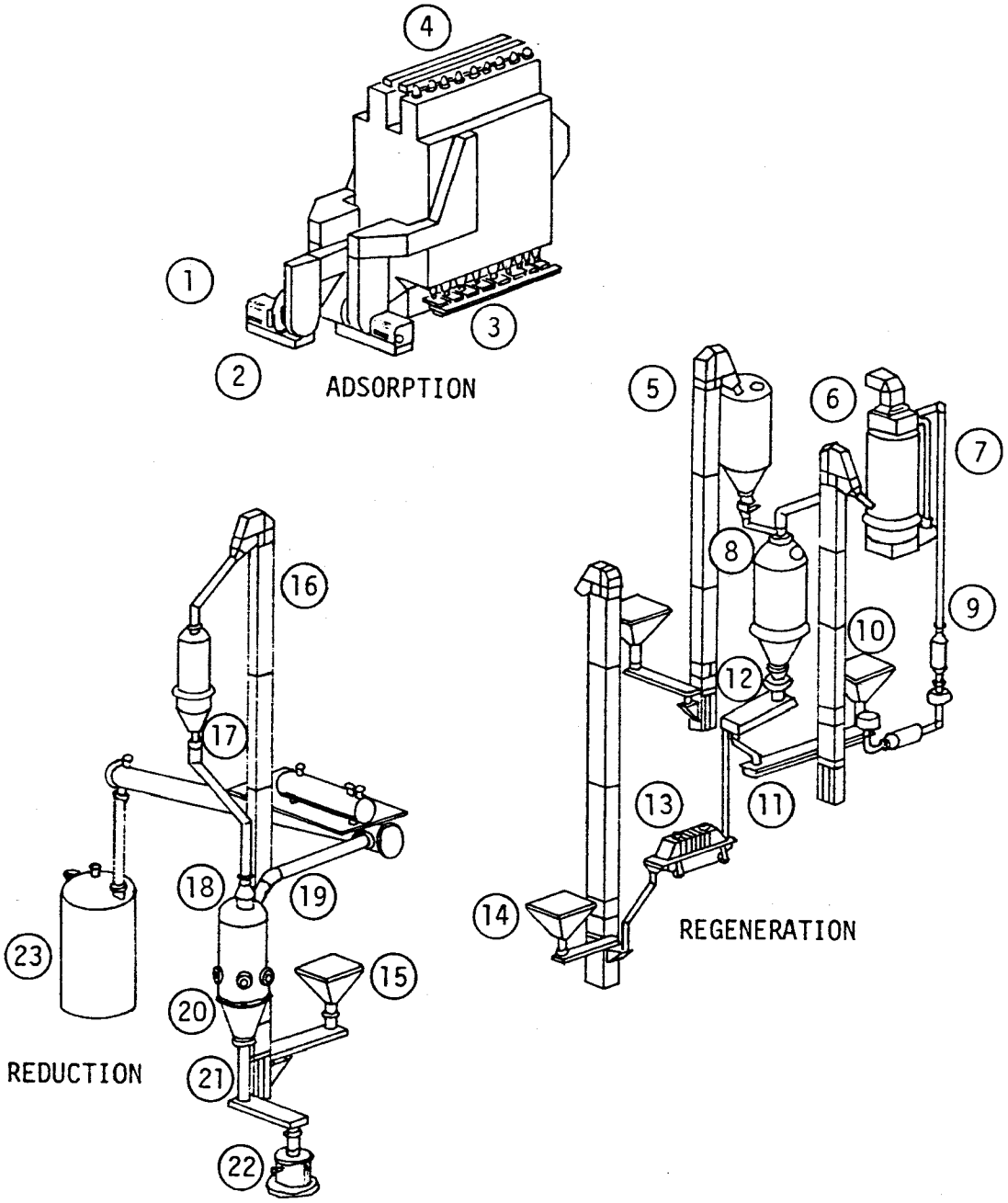

ADSORPTION SECTION

1. INLET FLUE GAS DUCTING, DILUTION AIR DESIGN, AND ADSORPTION SECTION OVERALL LAYOUT.
2. ADSORPTION DISCHARGE FANS.
3. ADSORBER DISCHARGE FEEDERS CONVEYORS AND SITE GLASSES WHICH SHOW CHAR MOVEMENT.
4. ADSORBER FEED CONVEYORS.
5. CHAR BUCKET ELEVATORS.

REGENERATION SECTION

6. AIR PREHEATER, SAND FLUID BED HEATER, HOT SAND BUCKET ELEVATOR.
7. START UP AIR HEATER.
8. SATURATED CHAR SURGE TANK, SATURATED CHAR FEEDER, REGENERATOR.
9. SAND HEATER BLOWER.
10. SAND MAKE UP HOPPER, FEEDER.
11. HOT SAND CONVEYOR.
12. CHAR-SAND SEPARATOR FEEDER.
13. REGENERATED CHAR COOLER.
14. REGENERATED CHAR BUCKET ELEVATOR, CHAR MAKE UP HOPPER, FEEDER.

REDUCTION SECTION

15. COAL MAKE UP HOPPER, FEEDER FEED BUCKET ELEVATOR.
16. COAL FEED BIN.
17. COAL FEED BIN ACTIVATOR, ROTARY COAL AIRLOCK, RESOX START UP HEATER.
18. RESOX REACTOR.
19. SULFUR CONDENSER, TAIL GAS BLOWER.
20. CONTROL AIR BLOWER.
21. ASH DISCHARGE FEEDER
22. ASH RECEIVER VESSEL, WEIGH SCALE.
23. SULFUR STORAGE TANK, SULFUR TRANSFER PUMP.

Figure 24. FW-BF Dry Adsorption Prototype: General Equipment Schematic.

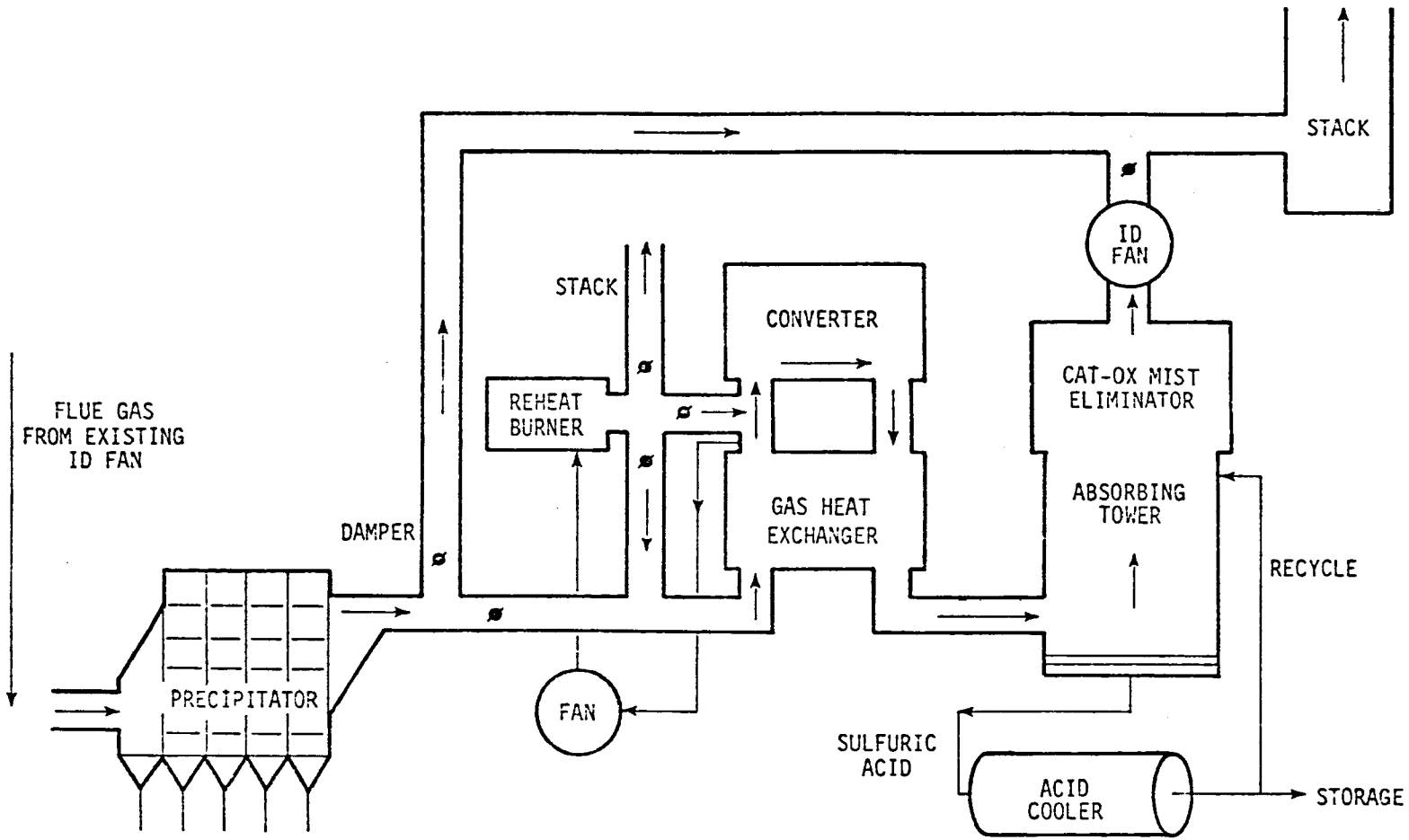

Figure 25. Wood River No. 4 Catalytic Oxidation FGD System: Simplified Process Diagram.

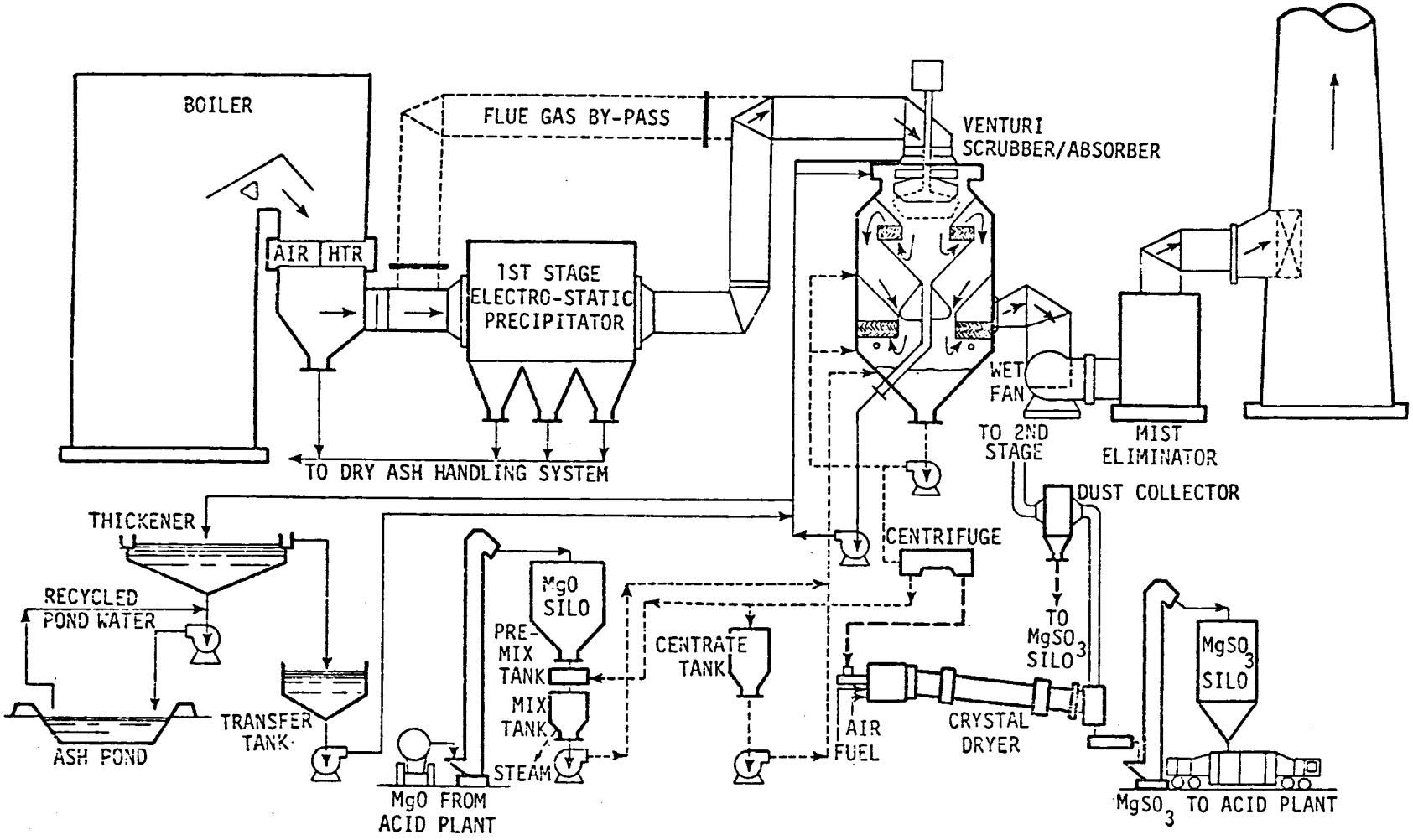

Figure 26. Dickerson No. 3 Regenerative FGD System: General Process Diagram.

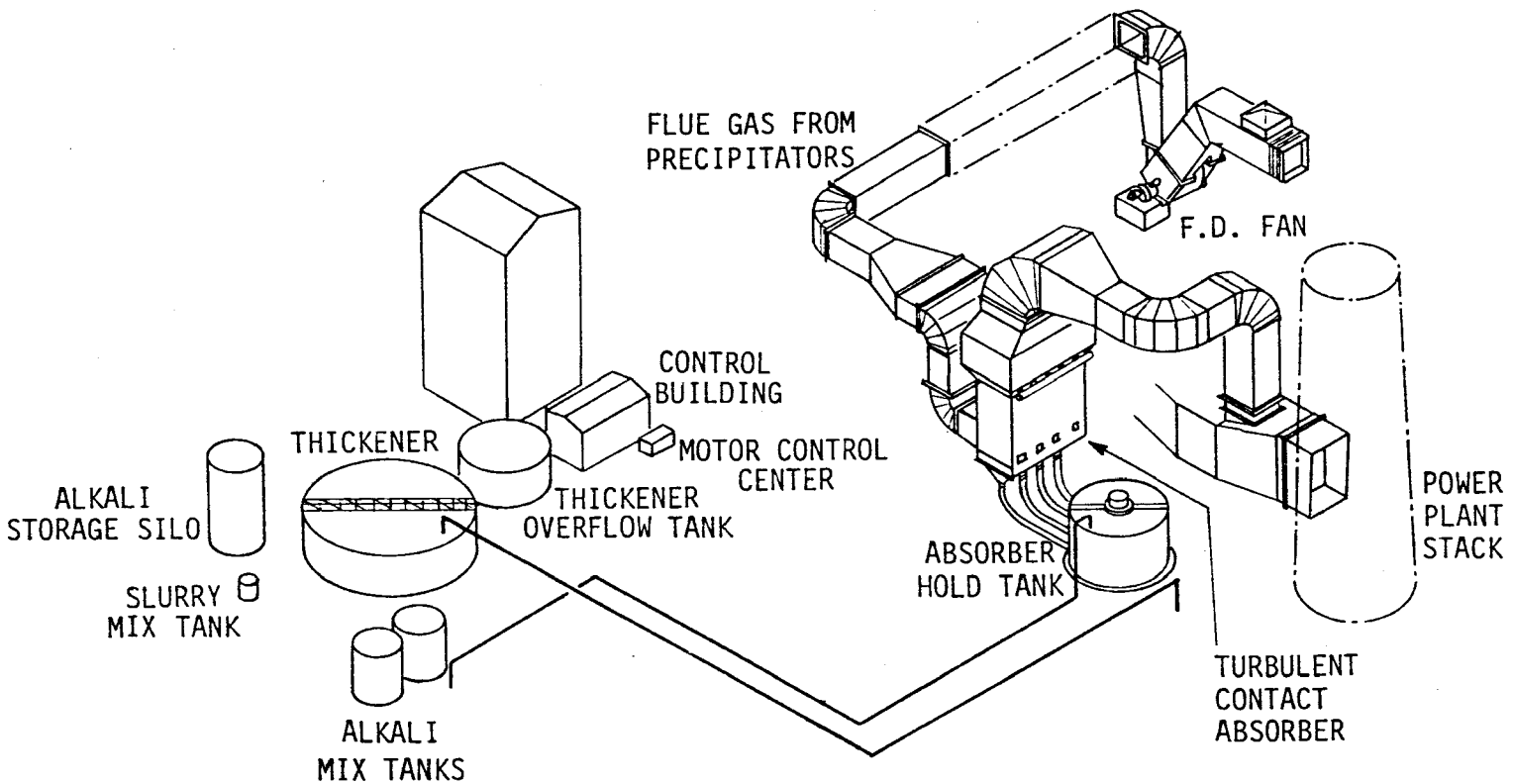

Figure 27. Mohave No. 1 Vertical Test Module:
Simplified Process Diagram.

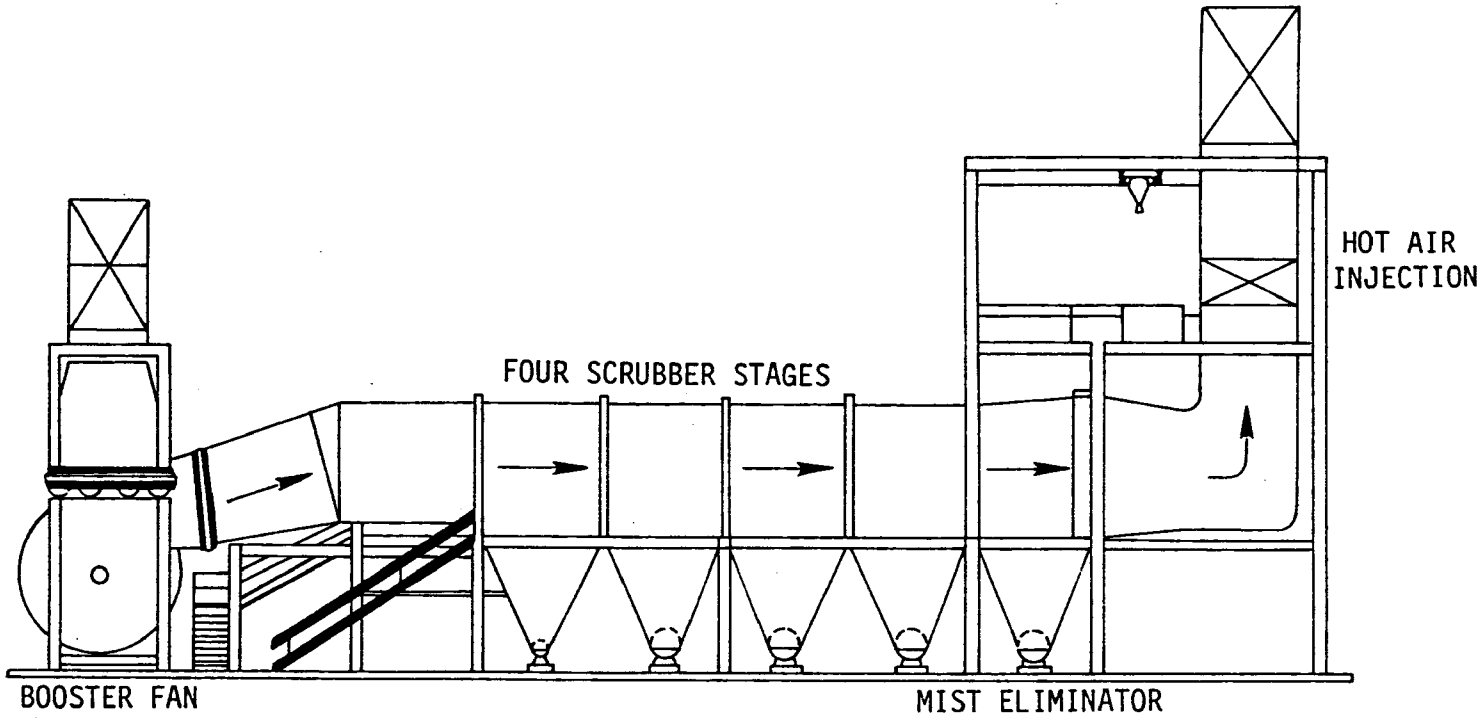

Figure 28. Mohave No. 2 Horizontal Test Module: Simplified Side View.

APPENDIX D

DEFINITIONS

DEFINITIONS

Boiler Capacity Factor	(kWh generation in year)/(maximum continuous generating capacity in kW x 8760 hr/yr).
Boiler Utilization Parameter	Hours boiler operated/hours in period, expressed as a percentage.
Efficiency,	
Particulates	Operational - The actual percentage of particulates removed by the FGD system and the particulate control devices from the untreated flue gas. All others - The design efficiency (percentage) of particulate removed by the FGD system and the particulate control devices.
SO_2	Operational - The actual percentage of SO_2 removed from the flue gas. All others - The design efficiency.
FGD Availability Factor	Hours the FGD system was available for operation (whether operated or not)/hours in period, expressed as a percentage.
FGD Reliability Factor	Hours the FGD system operated/hours FGD system was called upon to operate, expressed as a percentage.
FGD Operability Factor	Hours the FGD system was operated/boiler operating hours in period, expressed as a percentage.
FGD Utilization Factor	Hours FGD system operated/hours in period, expressed as a percentage.
FGD Status	
Category 1	Operational - Unit has been or is in service removing SO_2.
Category 2	Under Construction - Ground has been broken for installation of FGD system, but FGD system has not become operational.
Category 3	Planned, Contract Awarded - Contract has been signed for purchase of FGD system but ground has not been broken for installation.

DEFINITIONS

Category 4	Planned, Letter of Intent Signed - Letter of intent has been signed, but legal contract for purchase has not been awarded.
Category 5	Planned, Requesting/Evaluating Bids - Bid requests have been released but no letter of intent or contract has been issued.
Category 6	Considering only FGD Systems - An FGD system is proposed as a means to meet an SO_2 regulation.
Category 7	Considering an FGD system as well as alternative methods (Tables 14, 15).
FGD Vendor	Vendor with a signed contract, letter of intent or strong commitment because of test unit or past purchases.
Fuel Characteristics	Type of fuel, average gross heating value in Btu/lb, average percent ash and average percent sulfur content for fuel as fired.
Identification Number	Number of unit in the alphabetical listing in Tables 1, 2, 3 or Tables 14, 15.
New	FGD unit and boiler were designed at the same time or space for addition of an FGD unit was reserved when boiler was constructed.
Operational Experience	Operational - Brief summary of FGD system operation since start-up and description of current month's performance. All others - Comments regarding state of construction, etc.
Process	Company name if process is patented. Generic name if several companies have similar processes.

DEFINITIONS

Regulatory Class	A. New boiler constructed subject to Federal New Source Performance Standards. B. Existing boiler subject to State Standard that is more stringent than the Federal New Source Performance Standard (NSPS). C. Existing boiler subject to State Standard that is equal to or less stringent than NSPS. D. Other. E. Unknown.
Retrofit	FGD unit must be added to an existing boiler not specifically designed to accommodate FGD unit.
Sludge Disposal	Comments on disposal method for those units generating sludge including: lined or unlined ponds, stabilized or unstabilized sludge, and on- or off-site disposal.
Start-up Date	Operational - Date when SO_2 removal began. All others - Date when SO_2 removal is scheduled to begin. Generally this will be the start-up date of the boiler.
Unit Cost	Capital Cost in $/kW including: SO_2 absorption and regeneration system, SO_2 recovery system, solids disposal, site improvements, land, roads, tracks, substation, engineering costs, contractors fee and interest on capital during construction. Annualized Cost in mills/kWh including fixed and variable costs. Fixed costs include: interest on capital, depreciation, insurance, taxes, and labor costs including overhead. Variable costs include: raw materials, utilities, and maintenance.

DEFINITIONS

Unit Location	City and State listed in mailing address.
Unit Name	Unit identification as it appears in Electrical World - Direction of Electrical Utilities, McGraw-Hill - Current Edition - or as indicated by utility representative for installations in planning stages.
Unit Rating	Operational - Maximum continuous gross generation capacity in MW; Preoperational - maximum continuous design generation capacity in MW.
Utility Name	Name of corporation as it appears in Electrical World - Directory of Electrical Utilities, McGraw-Hill - Current Edition - as space permits.
Water Make-Up	Gallons per minute of make-up water required per MW of capacity.