EPA-650/2-74-115

OCTOBER 1974

Environmental Protection Technology Series

TRACE POLLUTANT EMISSIONS FROM THE PROCESSING OF METALLIC ORES

Office of Research and Development
U.S. Environmental Protection Agency
Washington, DC 20460

EPA-650/2-74-115

TRACE POLLUTANT EMISSIONS FROM THE PROCESSING OF METALLIC ORES

by

V. Katari, G. Isaacs, and T. W. Devitt

PEDCo-Environmental Specialists, Inc.
Atkinson Square (Suite 13)
Cincinnati, Ohio 45246

Contract No. 68-02-1321
Task 5
ROAP No. 21AUZ-02a
Program Element No. 1AB015

EPA Project Officer: D. K. Oestreich

Control Systems Laboratory
National Environmental Research Center
Research Triangle Park, North Carolina 27711

Prepared for

OFFICE OF RESEARCH AND DEVELOPMENT
U.S. ENVIRONMENTAL PROTECTION AGENCY
WASHINGTON, D.C. 20460

October 1974

This report has been reviewed by the Environmental Protection Agency and approved for publication. Approval does not signify that the contents necessarily reflect the views and policies of the Agency, nor does mention of trade names or commercial products constitute endorsement or recommendation for use.

ACKNOWLEDGMENT

This report was prepared for the U.S. Environmental Protection Agency by PEDCo-Environmental Specialists, Inc., Cincinnati, Ohio. Mr. Timothy W. Devitt was the PEDCo Project Manager. Principal authors of the report were Mr. Vishnu Katari, Mr. Gerald Isaacs and Mr. Devitt

Mrs. Anne Cassel was the project editor. Mr. Chuck Fleming was responsible for report graphics and final report preparation.

Mr. D. Oestreich was the Project Officer for the U.S. Environmental Protection Agency. PEDCo appreciates the assistance and cooperation extended by the Project Officer, various members of the Control Systems Laboratory, and Mr. Paul W. Spaite, EPA consultant.

TABLE OF CONTENTS

	Page
ACKNOWLEDGMENT	iii
LIST OF FIGURES	ix
LIST OF TABLES	xi
1.0 INTRODUCTION	1-1
2.0 IRON AND STEEL INDUSTRY	2-1
2.1 Industry Background	2-1
2.2 Raw Materials	2-3
2.3 Products	2-8
2.4 Process Description	2-9
2.4.1 Mining Operations	2-9
2.4.2 Beneficiation	2-10
2.4.3 Agglomeration	2-15
2.4.4 Pig Iron Production	2-20
2.4.5 Steel Manufacture	2-26
2.4.6 Casting and Finishing Operations	2-34
2.4.7 Coking	2-35
2.4.8 Direct Metal Reduction Processes	2-38
2.5 Major Pollutant Sources	2-40
3.0 FERROALLOY INDUSTRY SEGMENT	3-1
3.1 Industry Background	3-1
3.2 Raw Materials	3-2
3.3 Products	3-3
3.4 Process Description	3-3
3.4.1 Ore Handling and Beneficiation	3-3
3.4.2 Smelting	3-4
3.4.3 Slag Processing	3-11
3.4.4 Finishing Operations	3-12
3.5 Major Pollutant Sources	3-13
4.0 COPPER INDUSTRY	4-1
4.1 Industry Background	4-1

TABLE OF CONTENTS

		Page
7.0	ALUMINUM INDUSTRY	7-1
7.1	Industry Background	7-1
7.2	Raw Materials	7-3
7.3	Products	7-7
7.4	Process Description	7-8
7.4.1	Bayer Process	7-8
7.4.2	Combined Process	7-13
7.4.3	Production of Aluminum	7-14
7.4.4	Finishing Operations	7-20
7.5	Major Pollutant Sources	7-22
8.0	TITANIUM INDUSTRY	8-1
8.1	Industry Background	8-1
8.2	Raw Materials	8-9
8.3	Products	8-11
8.4	Process Description	8-12
8.4.1	Mining	8-12
8.4.2	Beneficiation	8-14
8.4.3	Smelting	8-17
8.4.4	Metal Production	8-17
8.4.5	Pigment Production	8-21
8.5	Major Pollutant Sources	8-22
9.0	URANIUM INDUSTRY	9-1
9.1	Industry Background	9-1
9.2	Raw Materials	9-7
9.3	Products	9-9
9.4	Process Description	9-10
9.4.1	Mining	9-10
9.4.2	Milling	9-14
9.4.3	Extraction Process	9-17

TABLE OF CONTENTS

		Page
9.4.4	Refining Operation	9-18
9.4.5	Enrichment	9-20
9.4.6	Fuel Pellet Manufacturing	9-21
9.4.7	Fuel Element Manufacturing	9-22
9.4.8	Nuclear Power Generation	9-22
9.4.9	Fuel Reprocessing	9-23
9.5	Major Pollutant Sources	9-24
10.0	RECOMMENDATIONS	10-1
APPENDIX A	METAL PRODUCTION AND CONSUMPTION STATISTICS (1971)	A-1
APPENDIX B	IRON ORE MINING AND PRODUCTION STATISTICS	B-1
APPENDIX C	PRODUCTION STATISTICS OF FERROALLOYS	C-1
APPENDIX D	COPPER MINE PRODUCTION STATISTICS	D-1
APPENDIX E	LEAD PRODUCING MINES IN THE UNITED STATES	E-1
APPENDIX F	ZINC PRODUCTION IN THE UNITED STATES, BY STATE, 1971	F-1
APPENDIX G	ALUMINUM, ALUMINA AND BAUXITE PRODUCTION STATISTICS	G-1
APPENDIX H	TITANIUM CONSUMPTION (UNITED STATES) STATISTICS	H-1
APPENDIX I	URANIUM MINING AND PROCESSING COMPANIES	I-1

LIST OF FIGURES

Figure		Page
2.1	Iron and Steel Production	2-11
2.2	Coke Plant Operation	2-36
3.1	Ferroalloy Production	3-5
4.1	Copper Industry	4-9
5.1	Primary Lead Production	5-7
6.1	Primary Zinc Production	6-7
7.1	Primary Aluminum Industry	7-9
8.1	Titanium Process Flow Sheet	8-13
9.1	Uranium Industry	9-11
A-1	Antimony Production and Consumption Statistics (1971)	A-2
A-2	Bauxite (aluminum ore) Production and Consumption Statistics (1971)	A-3
A-3	Bismuth Production and Consumption Statistics (1971)	A-4
A-4	Cadmium Production and Consumption Statistics (1971)	A-5
A-5	Chromite Production and Consumption Statistics (1971)	A-6
A-6	Cobalt Production and Consumption Statistics (1971)	A-7
A-7	Columbium and Tantalum Statistics (1970)	A-8
A-8	Copper Production and Consumption Statistics (1971)	A-9

LIST OF FIGURES

Figure		Page
A-9	Iron Production and Consumption Statistics (1970)	A-10
A-10	Lead Production and Consumption Statistics (1971)	A-11
A-11	Magnesium Production and Consumption Statistics (1971)	A-12
A-12	Manganese Production and Consumption (1971)	A-13
A-13	Mercury Production and Consumption Statistics (1971).	A-14
A-14	Molybdenum Production and Consumption Statistics (1971)	A-15
A-15	Nickel Production and Consumption Statistics (1971)	A-16
A-16	Tin Production and Consumption Statistics (1971)	A-17
A-17	Titanium Production and Consumption Statistics (1971)	A-18
A-18	Tungsten Production and Consumption Statistics (1971)	A-19
A-19	Uranium Production and Consumption Statistics (1971)	A-20
A-20	Vanadium Production and Consumption Statistics (1971)	A-21
A-21	Zinc Production and Consumption Statistics (1971)	A-22

LIST OF TABLES

Table		Page
1.1	Quantities of Ore Mined and Processed in the United States	1-2
1.2	Relative Toxicities of Potential Air Pollutants	1-6
2.1	Iron Ore Mined in the United States	2-4
2.2	Iron-Bearing Minerals	2-5
2.3	Analysis of Taconite Ores	2-6
2.4	Iron Ore Analyses	2-7
2.5	Typical Taconite Concentrate Analysis	2-13
2.6	Average Grade of Sinter and Pellets Produced in 1968 Northeastern Iron Ores	2-16
2.7	Particle Size Analysis of Particulate Emissions from a Sintering Machine	2-17
2.8	Compositions of Pellets Produced from Concentrates Originating with Magnetite Taconites (1968)	2-18
2.9	Typical Operating Statistics	2-19
2.10	Chemical Analysis of Nodulized Product, Average	2-20
2.11	Blast Furnace: Input and Output Materials	2-22
2.12	Analysis of Limestone from Columbus, Ohio	2-22
2.13	Chemical Analyses of Dry, Blast Furnace Flue Dust	2-23
2.14	Size Analysis of Flue Dust from U.S. Blast Furnaces	2-23

LIST OF TABLES

Table		Page
2.15	Slag Analysis	2-24
2.16	Analysis of Furnace Gas	2-25
2.17	Chemical Compositions of Electric-Furnace Dusts	2-28
2.18	Changes in Composition of Electric-Furnace Dust During a Single Heat	2-28
2.19	Chemical Compositions of Open-Hearth Particulate Emissions, Oxygen Lancing	2-30
2.20	Operating Data for Basic Oxygen Furnace	2-31
2.21	Chemical Composition of Basic Oxygen Furnace Steelmaking Dust from Three Typical U.S. Plants	2-32
2.22	Dust and Metal Analyses for Vacuum-Treated Steels	2-32
2.23	Calculated Gas Composition for 100-Ton BOF Blown at 12,000 SCFM O_2 Rate for 20 Minutes	2-33
2.24	Emission Factors for By-Product Coke Manufacture Without Controls	2-39
3.1	Exhaust Flow from Electric Furnaces Processing Common Ferroalloys	3-7
3.2	Particulate Emissions from Ferroalloy Production	3-7
3.3	Typical Characterizations of Ferroalloy Furnace Fumes	3-8
4.1	Major Copper-Bearing Ores	4-3
4.2	Typical Analysis of Copper Ore Used at White Pine Copper Company, Michigan	4-5
4.3	Coproduct and By-Product Relationships of Copper with Other Metals	4-6
4.4	Analysis of Copper Concentrate	4-11
4.5	Comparative Analyses of Tailings, Undisturbed Desert, and Overburden Areas, Pima Mining Co., 1972	4-12
4.6	Typical Input and Output to a Copper Roaster	4-15
4.7	Distribution of Elements in Feed to a Copper Roaster	4-15

LIST OF TABLES

Table		Page
4.8	Contaminants of Gas Stream from Roaster	4-16
4.9	Distribution of Elements in Reverberatory Furnace Feed	4-17
4.10	Composition of Reverberatory Furnace Exhaust Gases	4-18
4.11	Distribution of Elements in Charge to the Converter	4-19
4.12	Disposition of Elements in Feed to Refining Furnace	4-21
4.13	General Range Analysis of Anode, Electrolyte, Refined Copper, and Anode Slime	4-22
5.1	Lead Minerals, By Name, Composition	5-2
5.2	Coproduct and By-product Relationships of Lead and Other Metals	5-5
5.3	Typical Analysis of a Lead Concentrate	5-8
5.4	Typical Analysis of Pressure Leach Feed, Residue, and Leach Solution	5-10
5.5	Analysis of Sinter Machine Gases (Missouri Lead Operating Company)	5-12
5.6	Typical Sintering Machine Feed and Products	5-13
5.7	Typical Blast-Furnace Charge	5-14
5.8	Typical Blast-Furnace Materials and Products	5-15
6.1	Zinc Smelter and Electrolytic Refinery Capacities	6-3
6.2	Zinc-Bearing Minerals	6-4
6.3	Zinc By-product and Coproduct Relationships	6-5
6.4	Elements That May Be Found in Zinc Concentrates	6-9
6.5	Disposition of Elements in the Feed to Roaster	6-10
6.6	Typical Zinc Sintering Operations	6-13

LIST OF TABLES

Table		Page
6.7	Disposition of Elements in Charge to Horizontal Zinc Retort	6-15
6.8	Disposition of Elements in Charge to Electrolytic Zinc Plant	6-18
6.9	Operating Data of Rotary Furnaces for Obtaining Zinc Oxide	6-20
7.1	Distribution of Plants by Population	7-2
7.2	Chemical Composition of Bauxites	7-5
7.3	Chemical Composition of Bauxite in Georgia	7-5
7.4	Composition of Imported Bauxite	7-6
7.5	Raw Materials for Production of Aluminum	7-7
7.6	Typical Composition of Alumina	7-7
7.7	Insoluble Solids of Red Mud from Jamaican Bauxite	7-11
7.8	Slurry Soluble Solids of Red Mud from Jamaican Bauxite	7-11
7.9	Chemical Analyses of Red Muds	7-12
7.10	Composition of a High Quality Alumina	7-13
7.11	Anode Baking Ring Furnace Emissions	7-15
7.12	Operating Requirements of Prebaked Anode and Soderberg Systems	7-17
7.13	Representative Particle Size Distributions of Uncontrolled Effluents from Prebaked and Horizontal-Stud Soderberg Cells	7-19
7.14	Estimated Composition of the Air Discharged from the Cell Room Before Control Equipment	7-20
7.15	Aluminum Smelter Effluents Models	7-21
8.1	Sources and Estimates of Titanium-Containing Emissions	8-24
9.1	U.S. Uranium Milling Companies and Plants in 1971	9-3

LIST OF TABLES

Table		Page
B-1	Economic Facts of Life Place On-Going Emphasis on Pellets as U.S. Natural Ore Operations Continue Phase-O	B-2
C-1	Ferroalloys Produced and Shipped from Furnaces in the United States (1971)	C-2
C-2	Producers of Ferroalloys in the United States in 1971	C-3
D-1	United States Principal Copper Mine Statistics/Capacities and/or 1972 Production	D-2
E-1	Lead Producing Mines in United States	E-2
E-2	Mine Production of Recoverable Lead in the United States, By State	E-4
F-1	Production of Lead and Zinc in the United States in 1971, By State and Class of Ore, From Old Tailings, etc., in Terms of Recoverable Metals	F-2
G-1	Matrix of the Characteristics of Primary Aluminum Plants	G-2
G-2	Capacities of Domestic Alumina Plants, December 31, 1971	G-3
G-3	Mine Production of Bauxite and Shipments From Mines and Processing Plants to Consumers in the United States	G-4
H-1	Consumption of Titanium Concentrates in the United States, By Product	H-2
I-1	U.S. Uranium Milling Companies and Plants in 1971	I-2
I-2	Principal Companies with Capacity for Processing and Fabricating Nuclear Fuel Materials in 1971	I-3

1.0 INTRODUCTION

The objective of this study was to identify potentially significant sources of hazardous emissions in the metallic ore mining and processing industries. For analysis of the industrial activities associated with mining and processing of metallic ores, the following data were collected.

1) Quantities of domestic production, imports, exports, and consumption of each ore.

2) Composition of selected ores.

3) Quantity and composition (whenever possible) of air, water and solid waste discharges.

Table 1.1 presents 1971 data on the quantities of 21 ores mined and processed in the United States. Additional information on the amount of domestic production, imports, exports, and consumption patterns for each of these ores is presented in Figures A-1 through A-21 in Appendix A.

On the basis of quantity of ore produced, toxicity of potential emissions, potential for fugitive dust emission, and process operations, the following industries were selected for detailed study.

- Iron and Steel Industry
- Ferroalloy Industry
- Primary Copper Industry
- Primary Lead Industry
- Primary Zinc Industry
- Aluminum Industry
- Titanium Industry
- Uranium Industry

Table 1.1 QUANTITIES OF ORE MINED AND PROCESSED IN THE UNITED STATES[1]

Type of ore	Amount of ore mined in U.S. (tons)	Amount of ore processed in U.S.[a] (tons)
Antimony	1,025	14,000[b]
Bauxite	2,300,000	16,000,000
Bismuth	800	1,200
Cadmium	4,000	5,600
Chromite	0	1,000,000
Cobalt	W	5,600[c]
Columbium	W	2,860[c]
Copper	242,500,000	243,000,000
Iron	240,000,000	295,000,000[d]
Lead	60,400,000	60,400,000
Magnesium	N/A	127,156
Manganese	200,000	2,100,000
Mercury	670	2,000
Molybdenum	55,000	55,000
Nickel	13,000	130,000
Tin	W	46,940
Titanium	710,000[e]	1,100,000[e]
Tungsten	34,500[e]	34,500[e]
Uranium	6,000,000	120,000[e]
Vanadium	5,200	4,400
Zinc	534,000[b]	1,100,000[b]

a) Includes domestic processing of imported ores, where applicable.
b) Metal content of ore. Quantity of ore processed could range from 20 to 100 times the metal content value.
c) Imported ore
d) Includes secondary metals processing.
e) Ore concentrates.
W) Data withheld by U.S. Bureau of Mines to avoid disclosure of production capacity of individual companies
N/A Not available.

Process flow sheets for these selected industries were prepared identifying major processes and material flow. Sources of emissions of various pollutants are identified. Descriptions of processes entailed in the individual industries are presented in Chapters 2 through 9.

These chapters are further divided into five sections. The first section presents background information on the industry. The second section describes raw materials including area of availability and different ore types. The third section lists the products and by-products of the industry. The fourth section describes the process, process operating conditions, process emissions, and material handling procedures. The fifth section identifies the most significant emission sources within the industry.

In conducting this study a common set of nomenclature developed by EPA's Control Systems Laboratory was used so that the output of this study would parallel that of other CSL contractors studying other industries. The terms used and their definitions are listed below.

1. RAW MATERIALS are feed materials for processes. They are of two types: primary raw materials that are used in the chemical form that they were taken from the land, water or air and secondary raw materials that are industrial intermediate products.

2. INDUSTRIES are made up of groups of companies that are considered competitors in production of the same products. Industries have an identifiable population of companies and have a high degree of commonality with respect to raw materials consumed, processes employed, products produced, environmental control problems experienced, pollutants produced and control equipment used.

3. OPERATIONS are general industrial procedures by which materials are processed or products produced. Operations can consist of a series of processes, or can be accomplished by two or more alternative processes.

4. PROCESSES are the basic units that collectively describe industries. Processes comprise specific arrangements of equipment that accomplish, in a distinct way, chemical or physical transformation of input materials into end products, intermediate products, secondary raw materials or waste materials. Other process outputs include waste streams to the air, water, or land. Input materials can include primary or secondary raw materials, waste materials, or intermediate products. Where two or more different combinations of process steps accomplish the same chemical or physical transformation but have different environmental impacts (e.g., different emission characteristics), each combination is a distinct process.

5. PROCESS STEPS are the basic components of a process that utilize process equipment or materials handling equipment (process equipment does not include control equipment). In cases where a piece of process equipment has two or more cycles or phases of operation with distinctly different emissions to the atmosphere, such cycles or phases can be considered sequential process steps.

6. SOURCES are process steps from which significant amounts of air, water, or land pollution can be discharged.

7. CONTROL EQUIPMENT is equipment whose primary function is to reduce emissions to the atmosphere. Its presence is not essential to the economic viability of the process.

8. COMPANIES include corporate sub-divisions that have a product slate similar to other companies in an industry.

9. PLANTS are comprised of collections of processes to produce the products associated with their industry. Individual plants within an industry may employ different combinations of processes but all plants will have some of the processes that are common to the industry.

10. END PRODUCTS include only those process outputs that are marketed for use or consumption in the form that they exit from the process. After use, an end product becomes a waste material.

11. INTERMEDIATE PRODUCTS are process output streams that go either to other processes in the same industry in which they are produced, or to other industries where they become secondary raw materials.

12. WASTE MATERIALS are either process outputs that go to a scavenging industry, or are used end products that are disposed or processed to recover reusable constituents.

The relative toxicity of various pollutants is presented in Table 1.2.

Chapter 10 identifies the most significant sources of emission discussed in the preceding chapters. Appendices B through I present relevant industry statistics.

Table 1.2 RELATIVE TOXICITIES OF POTENTIAL AIR POLLUTANTS[2]

(Selected TLV's for Toxic Dusts, Fumes and Mists-)

Substance	TLV ($mg\ m^{-3}$)
Extremely Toxic	
Beryllium	0.002
Platinum, soluble salts	0.002
Silver, metal and soluble compounds	0.01
Mercury, vapor, inorg. and org. compounds (except alkyl Hg; 0.01)	0.05
Methyl isocyanate	[illegible]
Highly Toxic	
Lead, tetraethyl	0.1 (as Pb)
Cadmium oxide fumes	0.1 (as Cd)
Chromic acid and chromates	0.1 (as CrO_3)
Cobalt metal, fume and dust	[illegible]
Vanadium, V_2O_5 fume	[illegible]
Lead arsenate	[illegible]
Lead chromate	[illegible] (as Pb)
Lead	[illegible]
Uranium, metal, dust and soluble salts	[illegible]
[illegible]	0.2 [illegible]
[illegible]	[illegible]
[illegible] silica, crystalline cristobalite [illegible]	0.1-0.3
[illegible]	[illegible] (as Se)
[illegible]	[illegible] (as U)
[illegible]	
[illegible] compounds	0.5 (as Sb)
[illegible] compounds	0.5 (as As)
[illegible]	[illegible]
[illegible] soluble salts	0.5 (as Cr)
[illegible] dust	0.5
[illegible]	0.5
[illegible]	0.7
[illegible] fume	1
[illegible]	1
[illegible] metal and insoluble salts	1
[illegible] fumes and mists	1
[illegible] (raw)	1
[illegible] oxide	1
[illegible] soluble salts	1 (as Fe)
[illegible] vanadium dust	1
[illegible]	1
[illegible] metal and soluble compounds (as [illegible])	1
[illegible] acid	1
[illegible] soluble compounds	1 (as W)
[illegible] fume	1
[illegible]	1
[illegible]	5mppcf-
[illegible]	5mppcf-
[illegible]	5mppcf-

Substance	TLV ($mg\ m^{-3}$)
Toxic	
Asphalt (petroleum) fumes	2
Hydrogen fluoride (HF)	2
Sodium hydroxide	2
Tin compounds (except organic compounds, 0.1; SnO_2, 15 and SnH_4)	2
Fluoride salts	2.5 (as F)
Chlorine (Cl_2)	2
Carbon black	[illegible]
Coal dust (bituminous)	2.5 (respirable)
Calcium oxide	5
Cyanides	5 (as CN)
Fibrous glass (5- [illegible])	5
Formaldehyde	5
Manganese	5
Molybdenum, soluble compounds	[illegible]
Nitric acid	5
Oil mist, particulate	5
Tungsten, insoluble compounds	5 (as W)
Zinc oxide, fume	5
Hydrogen chloride	7
Nitrogen dioxide	8
Hydrogen bromide	10
Iron oxide fume	10
Methyl mercaptan	10
Wood dust, total dust	10
Sulfur dioxide	13
Hydrogen sulfide	15
Amorphous silica (incl. diatomaceous earth)	20mppcf-
Mica, soapstone, and talc	20mppcf-
Mild or Low Toxicity	
Boron oxide	15
Magnesium oxide fume	15
Molybdenum, insoluble compounds	15
Ammonia	35
Carbon monoxide	55
Carbon tetrachloride	65
Benzene	80
Methyl alcohol	260
Perchloroethylene	670
Liquefied petroleum gas	1800
"Inert" or Nuisance Particulates (<1% SiO_2)	15 (or 50mppcf-)
Aluminum oxide	
Calcium carbonate	
Cellulose	
Cement, portland	
Emery	
Glycerine mist	
Graphite, synthetic	
Limestone	
Magnesite	
Marble	
Plaster of Paris	
Rouge	
Silicon carbide	
Starch	
Sucrose	
Tin oxide	
Titanium dioxide	
Vegetable oil mists (except castor, cashew nut or similar irritant oils)	

REFERENCES FOR CHAPTER 1

1. U.S. Bureau of Mines, Minerals Year Book, 1970.

2. Vandegrift, A.E. et.al. Particulate Pollutant Systems Study, Final Report. Prepared for the U.S. Environmental Protection Agency, Division of Process Control Engineering, Research Triangle Park, North Carolina. Contract No. CPA 22-69-104.

2.0 IRON AND STEEL INDUSTRY

2.1 INDUSTRY BACKGROUND[a)1]

The United States is a major consumer of iron. It produces an estimated 13 percent and consumes approximately 25 percent of the world's supply. Transportation and construction industries are the major U.S. consumers, each accounting for approximately 25 percent of the total domestic consumption. It is estimated that an additional 20 percent is consumed in the manufacture of industrial and agricultural machinery and equipment. The remaining consumption includes use in a variety of products, such as oil and gas equipment and home appliances.

Domestic demand for primary iron in the year 2000 is projected to be 130 to 175 million short tons.* By comparison, the 1971 consumption of primary iron was 84 million tons, of which about 92 percent was processed into carbon and alloy steels.

Continued upward trends in transportation, particularly in the automobile industry to parallel the national economy, combined with mass production of steel-based modular housing and other construction, are major factors that could result in reaching the upper level (175 million) of the range in the year 2000. In addition, such technological changes as direct

---

a) Information for this section abstracted from Minerals Facts & Problems, U.S. Dept. of the Interior, 1970 Edition.

* A table of conversion factors from English to metric units is presented on page 9-27.

reduction and associated furnace and casting improvements leading to continuous steelmaking are expected to lead to decentralization of the industry and possibly to increase the demand for steel.

Failure of the steel industry to advance technology sufficiently to meet the increasingly competitive cost and quality of other materials such as aluminum and plastics could lead to diminishing markets, with demand gravitating toward the low level (130 million) of the forecast range.

In 1968, there were 109 iron ore mines operating in the United States, 13 of which were underground mines; there were 175 integrated steel plants, 483 steel foundries, and 2200 gray, malleable, and ductile iron foundries. Annual iron ore production was valued at over $800 million, and revenues of the steel industry totaled $18,652 million.

Most of the major steel companies own or control domestic mines that supply at least part of their ore needs. The steel industry also has invested substantially in iron mines in Canada, Venezuela, Chile, Brazil, Liberia, and Australia. The major companies producing iron ore in Canada are owned or controlled principally by U.S. interests.

Overall, captive mines are estimated to furnish about 85 percent of the ore used by the domestic iron and steel industry.

Most of our Nation's iron ore is produced in the Lake Superior iron mining district in Minnesota and Michigan; relatively small but significant mines produce iron ore for

domestic consumption in New York, Pennsylvania, Alabama, Missouri, Texas, Wyoming, Utah, and California.

About 65 to 70 percent of the Nation's steel industry is situated in the great industrial complex surrounding the lower Great Lakes ports in Illinois, Indiana, Michigan, Ohio, and western Pennsylvania. Large integrated steel mills are operated in northern New York, eastern Pennsylvania, eastern Maryland, and the Birmingham district of Alabama; relatively small integrated steel mills are operated in southern Illinois, Texas, Colorado, Utah, and California.

Although most of the steel in the United States is produced in integrated steel plants, these plants are outnumbered by small secondary steel works. At present, many industries are remelting steel economically.

Technologic trends in iron mining are significant. Taconite pellets are replacing conventional iron ores, huge open-pit mines are replacing the underground mines, and operation is changing from a seasonal to a year-round basis. Changes in the steel industry are equally significant. Oxygen furnaces, and to a lesser degree electric furnaces, are rapidly replacing the open hearths; continuous casting is reducing recycle scrap, and the mills are producing more and better steel with fewer men.

Table B-1 in Appendix B lists the iron and steel producing companies and their production rates.

2.2 RAW MATERIALS

Iron is a mixture of iron oxide minerals with varying quantities of mineral impurities. It retains its identity through various processing procedures to ultimate use.

The types of ore mined in the major iron ore districts are listed in Table 2.1, by mineralogical names. The principal forms of the iron in these and other ores are listed in Table 2.2, and distinguishing characteristics of each group are described.[2]

Table 2.1 IRON ORE MINED IN THE UNITED STATES[2]

District	Type of ore	Approximate percent of total tonnage mined
Lake Superior	Hematite	84
Birmingham, Alabama	Hematite brown	7
Chattanooga, Tenn.	Brown	1
Adirondack, Northern N.Y.	Magnetite	4
Northern N.J. and S.E. N.Y.	Magnetite	1
Lone Star, Texas		
Iron Mountain, Mo.	Hematite	
Vulcan, Calif.	Brown	
Cornwall, Penn.	Magnetite	
Sunrise, Wyoming	Carbonate	
Iron County, Utah		

Table 2.2 IRON-BEARING MINERALS[3]

Mineralogical name	Chemical name	Chemical composition
Oxide		
Magnetite	Ferrosoferric oxide	Fe_3O_4
Hematite	Ferric oxide	Fe_2O_3
Ilmenite	Iron-titanium oxide	$FeTiO_3$
Limonite	Hydrous iron oxide	$HFeO_2$
		$FeO(OH)$
Carbonate		
Chamosite		
Stilpnomelane	Iron	Various and sometimes complex
Greenalite		
Minnesotaite	Silicates	
Grunerite		
Sulphide		
Pyrite	Iron	FeS_2
Marcasite	Sulphide	FeS_2
Pyrrhotite		FeS

Hematite, magnetite, and limonite (goethite) ores are identifiable by color; these mineral ores are called respectively red, black, and brown ores. Siderite is occasionally identified as brown ore also.

The term taconite was first used locally in Minnesota to name hard, siliceous, banded rocks of the local iron-bearing formations. Over the last 20 years it has come to be used to identify similar materials in other districts. Table 2.3 gives a typical analysis of magnetic taconite ore.

Table 2.3 ANALYSIS OF TACONITE ORES[4]

Component	Percent
Total Fe	32.0
Magnetic Fe	24.5
SiO_2	45.2
Mn	0.3
Al_2O_3	0.8
CaO	2.3
MgO	3.0
P	0.05
S	0.02
TiO_2	Trace

Soft taconite, from which part of the silica has been leached by natural processes, is called semitaconite.

Minnesota, the main iron-producing state in the Nation, has produced over 60 percent of the Nation's iron ore during the past 85 years. This state has deposits of 45 billion tons of low-grade magnetic taconite and has limitless reserves of low-grade nonmagnetic ore.[5]

Contaminants that can be present in iron ore in potentially significant amounts are phosphorous, sulfur, titanium, vanadium, zinc, copper, chromium, nickel, arsenic, lead, tin, and cobalt.[6]

Table 2.4 gives a typical analysis of some of the iron ores.

Table 2.4 IRON ORE ANALYSES[7]

Kind of ore		Composition (percent)						
Range	Name	Fe	SiO_2	Al_2O_3	CaO	MgO	P	Mn
Mesabi	Hanna	53.29 to 54.96	8.04 to 10.01	0.43 to 0.57	0.15	0.10	0.041 to 0.047	0.39 to 0.60
Menominee	Weirton (Michigan)	51.5 to 54.90	3.02 to 4.23	2.17 to 2.61	0.65	0.90	0.464 to 0.542	0.17 to 0.33
Labrador	...	48.58 to 55.51	3.84 to 6.84	0.73 to 1.08	0.02 to 0.15	0.02 to 0.05	0.054 to 0.117	0.56 to 4.50

In addition to the ore materials, iron production requires an acid flux such as silica, a basic flux such as limestone or dolomite, or a neutral flux such as fluorspar. Various ferro-alloys (as alloying agents) and all types of by-product scrap are used in steel making. The processes require large amounts of fuel, mainly coke and oxygen.

A number of metallic elements and compounds may be added to molten iron or steel to effect specific properties in the end products. Additives are used to remove gases, decrease inclusions, counteract harmful effects of sulfur, or change the characteristics of the metal.

The more common metal additives are aluminum, chromium, cobalt, columbium, copper, lead, magnesium, manganese, molybdenum, nickel, carbon, phosphorus, boron, tin, titanium, tungsten, and vanadium.

2.3 PRODUCTS

The iron and steel industry produces pig iron; various grades of refined steel in such shapes as billets, blooms, and ingots; coke; and various chemicals recovered from the by-product coking process.

Pig iron is the product of the blast furnace formed by smelting iron ore with carbonous material as the reducing agent, usually in the form of coke. About 90 percent of the pig iron produced in the United States is consumed in making steel; the remainder is used for iron castings.

Cast iron is an iron containing carbon in excess of the solubility in the austenite that exists in the alloy at the eutectic temperature. Gray iron is cast iron containing two to four percent combined and free carbon. Malleable iron is white cast iron, annealed to graphitize all or part of the cementite. Ductile iron is cast iron that has been treated to give the primary graphite a nodular or spheroidal form.

Ingot iron is commercially pure iron made in an open-hearth furnace. Iron powder is iron in finely divided form, commonly made by reduction of finely ground oxide or atomization of molten iron, it can also be made electrolytically.

Steel is a refined iron-base alloy containing up to 2.5 percent carbon. There are six principal types of steels: 1) plain carbon, 2) full alloy, 3) stainless, 4) high-strength, low-alloy, 5) heat-resistant, and 6) electrical.

Small amounts of gold, silver, sulfur, copper, cobalt, and phosphate minerals are recovered occasionally as by-products

and coproducts during iron mining operations at a few domestic deposits. Manganese is often a coproduct.

Blast furnace slags are used principally in the construction and maintenance of roads, buildings, railroads, and airports; for mineral wool manufacture; and to some extent for agriculture. Steel slags, either alone or in blends with blast furnace slags, are used similarly.

2.4 PROCESS DESCRIPTION

Figure 2.1 illustrates the processes in the integrated iron and steel industry, and the major raw materials. As the figure shows, the principal operations are mining, concentration, agglommeration, pig iron production, steel manufacture, and by-product coking. The processes within these operations and their emissions are described in the following sections. Any extraordinary energy requirements of a process (e.g., high demands for fuel or electrical energy), are noted.

2.4.1 Mining Operations

Ore is mined either by open pit or underground methods, depending upon the shape, depth, and attitude of the ore body being mined.

(1)* Open-pit mining - Open-pit mining is used whenever the ratio of overburden to ore does not exceed an economical limit. Iron mines are responsible for little air pollution other than

---

*Numbers refer to corresponding processes in Figure 2.1.

fugitive dust emissions. Transportation of ores also entails significant emissions of fugitive dust. It is estimated that as much as two percent of the ore can be lost in transport in open cars unless dust suppression chemicals are added. Ore is transported from mines to mills by rail cars, trucks, truck-trailers, belt conveyors, or combinations of these carriers.

(2) Underground mining - Mining underground requires a larger investment per ton of annual capacity than open pit mining. Ores are extracted by several methods, including block caving, sub-level stopping, sub-level caving, and top slicing.

Ore is transported to the surface by rail trams, trackless shuttle cars, scrapers, or conveyor belts. The ore is then transported to the mill in the same manner as the open-pit mined ore. Fugitive dusts from these transportation operations are the only significant emissions.

2.4.2 Beneficiation

Iron ores as mined contain approximately 25 to 30 percent iron; they are concentrated to 60 to 65 percent iron. Some ores can be concentrated simply by crushing, screening, blending, and washing. Others, such as magnetic taconites, require grinding and subsequent separation of the iron from other materials by flotation or magnetic separation. Flotation has been found effective in the separation of nonmagnetic hematite from silica. These operations usually occur at the mine site.

(3) Crushing, blending and drying - Iron ores from the mine are first screened and crushed, then blended. Ores having high moisture

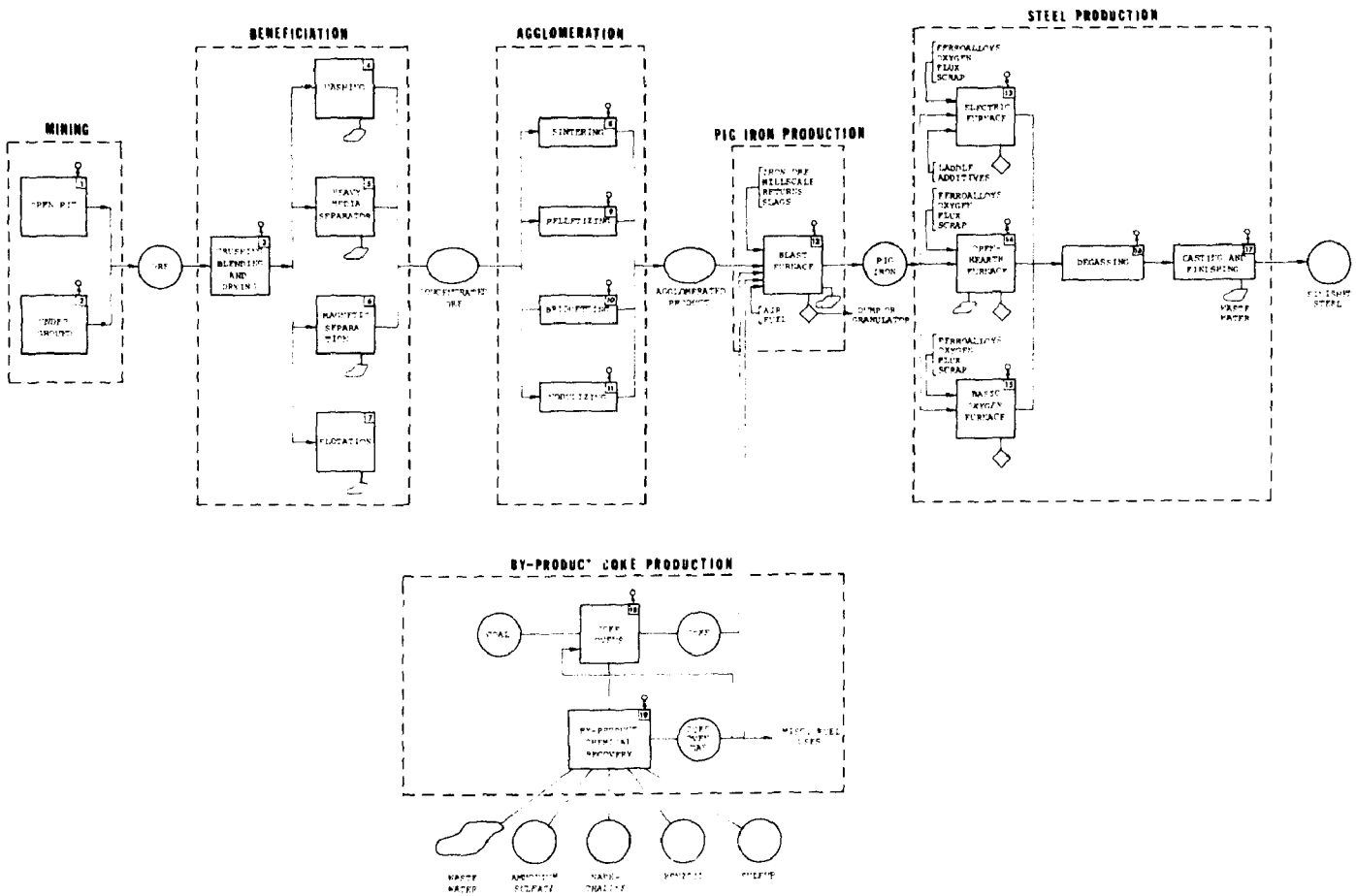

Figure 2.1. Iron and steel production.

content are dried before screening. Very little crushing and blending is done at the blast furnace plant.

In crushing of taconite ores, 15 to 20 percent of the primary crusher feed is eliminated as tailing and are dumped in the Great Lakes. Grinding of hard taconite requires about 11 KWH of power per gross ton of primary feed.[4]

Air pollution from crushing and blending operations is negligible. Dust emissions amounting to 2 pounds per ton of ore have the same composition as that of the ore being treated. Mostly they contain Fe_2O_3 or Fe_3O_4, some silica and limestone.

These operations are not known to create water pollution problems.

The ore arrives at the plant in railroad hoppers and is piled by a machine called a stacker. The blended material is transported by a belt conveyor to a surge bin and then to a washing plant.

At some plants treating Mesabi range magnetic taconite ore, the mine run ore containing a small amount of fines and a heavy proportion of large blocks is brought in and dumped from the 22-ton trucks directly into the top of a crusher installed at the mine site. The crushed material is conveyed to a surge pile, from which it is hauled by rail to concentrating plants.[8]

Washing - The iron-bearing minerals are separated from gangue materials by techniques based on differences in specific gravity. Many kinds of washers are used to remove sand and clay by suspending them in the flowing stream of water. The liquid stream containing gangue material is usually sent to waste water ponds. No air pollutants are known to be emitted.

(5) Heavy media separation - Separation is achieved by suspending ore materials in a liquid having intermediate specific gravity, in which the heavier iron mineral will sink and the lighter gangue will float to the surface. The waste water, containing gangue, is sent to a disposal area. No air pollution emissions result from this operation.

(6) Magnetic separation - Techniques based on magnetic properties are used to separate magnetic valuables from nonmagnetic materials. These methods are used mainly with taconite ores. Table 2.5 gives a typical analysis of taconite ore concentrate.

Table 2.5 TYPICAL TACONITE CONCENTRATE ANALYSIS[4]

Composition	Percentage
Fe	64.55
SiO_2	9.2
CaO	0.53
MgO	0.67
Al_2O_3	0.55
Mn	0.22

The product is pumped to wet storage, and gangue material present as slurry is discarded.

Prior to magnetic separation ore drying is often required.

(7) Flotation - Flotation techniques are also used to separate valuable ore-bearing minerals from the gangue. Various frothers (e.g., fatty acids, soaps, alkyl sulfates) are added to aid in the separation.

Waste water containing frothing agents and gangue from this process and other beneficiating processes can present serious pollution problems. For example, high concentrations of asbestos fibers found in the drinking water supply in Duluth, Minnesota are believed to be due to the waste water from taconite ore mining and beneficiation processes. The taconite processing company, who has been charged by EPA to be responsible for the release of asbestos fibers, maintains that their present disposal system poses no threat to human health or environment. They have, however, developed an alternative plan under which tailings would be pumped far below the surface of Lake Superior, where they would form an underwater sand reef.[9] It is argued that this method is unsatisfactory because the tailings would still enter and pollute the Lake. Ore-dryer before beneficiation also creates air pollution problems.

The materials handling and stockpiling operations associated with the beneficiation processes and also the stockpiling of raw materials create significant emissions of fugitive dust. Dusts from stockpilings consist of oxides of iron, silicon, calcium, and magnesium from iron oxides; carbonates of calcium and magnesium, magnesium oxide, and silica from limestone and dolomite; calcium fluoride, calcium carbonate and oxides of iron, aluminum, and silicon from fluorspar, which is used as the fluxing agent. The tailings can also present significant problems of solid waste disposal, although most of these are related either to fugitive dust emissions or to contamination of ground or surface waters.

Total mill tailings flow by gravity to the tailings pond. Coarse tailings are removed and treated in a hydroseparator and a thickener. Overflow from the thickener may be pumped back to the concentrating plant.

Dust emissions from tailing piles are estimated to be 4 to 16 tons/acre-year, depending upon climatic factors; for stockpiling of aggregates, the estimates range from 10 lb/ton-year for fine sand to 1.5 lb/ton-year for crushed rock.

Final concentrate is conveyed on belt conveyors to storage and is transported to iron and steel refining units by boat, barge, and railroad. Trucks are also used occasionally. Mostly the material is stored (stockpiled) at agglomeration units. Overhead clam bucket gantries, bottom cars, belt conveyors and gravity chutes are used for transporting the material from stockpiles. Stackers and shovels are used for loading purposes.

2.4.3 Agglomeration

Ores are agglomerated to produce suitably sized blast furnace feed. The four major process options for ore agglomeration are sintering, pelletizing, nodulizing, and briquetting. Of these, sintering and pelletizing are by far the most common, with sintering predominant. Pelletizing is usually done near the mine site, whereas sintering is performed at the steel mill.

(8) Sintering - The sintering process fuses various types of fine materials (e.g., iron ore, collected fumes) into an agglomerated mass of suitable size and strength to serve as blast furnace feed. Sintering plants range from 2000 to 6000 tons per day capacity.

Most of the iron ore in the northeastern United States is concentrated or pelletized at the mine site only. Table 2.6 gives average grade of sinter and pellets produced in the northeastern states in 1968.

Table 2.6 AVERAGE GRADE OF SINTER AND PELLETS PRODUCED IN 1968 NORTHEASTERN IRON ORES (DRY BASIS)[10]

	Fe	P	SiO_2	Mn	Al_2O_3	CaO	MgO	S
Benson Sinter	63.91	0.026	5.47	0.30	3.02	1.39	0.26	0.030
Benson Non-Bessemer Sinter	62.60	0.199	4.31	0.16	2.74	1.28	0.26	0.030
Port Henry Sinter	66.17	0.140	3.94	-	1.22	1.16	0.26	-
Cornwall Pellets	64.92	0.006	3.30	0.08	1.50	0.90	1.50	0.009
Morgantown Pellets (Grace Mine)	65.83	0.010	3.18	0.08	0.61	0.55	1.54	0.009

The mixture of iron ore fines or concentrates and coke fines is deposited on a traveling grate. The mixture is ignited by natural gas or fuel oil, burns, and forms a fused mass, which is subsequently fed to a cooler, then crushed, and screened.

The sintering process is a significant source of potentially hazardous emissions. The process emits not only sulfur oxides (about 30 to 40 percent of the sulfur in the charge is liberated), but also other volatile constituents. Particulate emissions are

estimated to be about 42 pounds per ton of sinter. In 1969, total particulate emissions from sinter operations were over 100,000 pounds per year.[11] Table 2.7 gives a screen analysis of particulate emissions from a sintering machine.

Table 2.7 PARTICLE SIZE ANALYSIS OF PARTICULATE EMISSIONS FROM A SINTERING MACHINE[12]

Screen size, microns	Weight retained, percent	Cumulative Weight, percent
5	25.1	25.1
10	47.6	72.7
20	14.6	87.3
30	5.8	93.1
44	5.0	98.1

Volumetric flow rate of gases released is approximately 1.5 to 2.0 scfm/lb per hour of sinter. These gases generally leave the machine at a temperature of 400°F or lower.[13]

Emissions from the cooler range from 0.2 to 0.25 scfm per hour of sinter capacity. Therefore, the total stack gas flow from sinter plants can be expected to range from 1.7 to 2.3 scfm/lb per hour of sinter product.[14]

Gas velocity from a sinter machine of a typical plant is 6.42 ft/second. In addition to sinter machines and sinter screens, all conveyor transfer points, loading points, chutes, and bins handling sinter are potential sources of fugitive dust. Many industries control the dust from these points by using a chemical wetting agent mixed with water.[15]

(9) Pelletizing - Pelletizing is used primarily for taconite ores. The ore is ground, mixed with water and binder, and rolled into small balls. These "green" pellets are first dried, then heated to between 2200 and 2500°F to bind the small particles, and finally cooled. Control of moisture content of pellets is very important to insure strength. Normal moisture content runs between 10.0 and 10.25 percent. The pellets are conveyed through a weight meter to storage. Magnetite taconites are concentrated and agglomerated at several locations in Minnesota. Table 2.8 gives the compositions of taconite pellets produced at some of these locations.

Table 2.8 COMPOSITIONS OF PELLETS PRODUCED FROM CONCENTRATES ORIGINATING WITH MAGNETITE TACONITES (1968)*4

	Fe	P	SiO_2	Mn	Al_2O_3	CaO	MgO	S
Minntae Pellets	65.12	0.011	5.50	0.16	0.42	0.25	0.59	0.002
Reserve Pellets	62.56	0.028	8.76	0.27	0.47	0.44	0.51	-
Erie Pellets	63.91	0.012	7.22	0.23	0.31	-	-	-
Eveleth Pellets	65.39	0.012	5.50	0.14	0.29	0.19	0.30	-
Birch Lake* Pellets	62.48	0.023	9.00	0.22	0.54	0.50	0.65	-

*Dry basis.

Total particulate emissions from pellet plants are 80,000 tons/year.[11] Since the concentrates received at pelletizing plants are usually moist, dust generation from handling is not a significant problem.

(10) Briquetting - In the briquetting process, ore fines are mixed with a binder and formed into compact masses between two rotating rolls. Alternatively, the ore may be heated to between 1200 and 1800°F and then briquetted while hot.

(11) Nodulizing - In the nodulizing process ore fines are heated in an oil- or gas-fired rotary kiln. The material moves through the kiln and is agglomerated into lumps by the rolling of the charge at temperatures near the fusion point of 2300 to 2500°F. The ore balls form nodules, which are then discharged and cooled.

Fuel consumption during nodulizing ranges from 2 to 4 million BTU/ton.[7] Table 2.9 gives typical operating statistics of nodulizing at one plant and Table 2.10 gives chemical analysis of the nodulized product of the plant.

Table 2.9 TYPICAL OPERATING STATISTICS[16]

Optimum nodulizing temperature, °F	
High-silica ore as charge	2300-2380
Low-silica ore as charge	2450-2500
Magnetite as charge	2300-2350
Temperature of nodules discharged from cooler, °F	70- 300
Coal consumption, pounds per long ton of nodules	175.66
Fuel consumption, BTU/ton of nodules:	
For low-silica ore	2,400,532
For magnetite	1,846,000
Power requirements, KWH/ton of nodules	16.2

Table 2.10 CHEMICAL ANALYSIS OF NODULIZED PRODUCT, AVERAGE[16]

(Values in percent)

	From low-silica ore	From taconite concentrate
Moisture	0.16	0.12
Fe	63.23	62.99
SiO_2	5.63	7.33
Mn	0.34	0.29
P	0.054	0.020
CaO	2.19	2.44

Exit gas temperature of the kiln is 530 to 580°F, and stack gas temperature of the cooler vent is about 150 to 300°F.

The agglomerated product is stockpiled. From storage, it is moved to surge hoppers at the blast furnace, where it is weighed and transferred to the top of the blast furnace by skip hoist or by belt conveyor. The flux material is transferred to the surge hoppers by dump cars.

No data were found on emissions from briquetting or nodulizing processes. The potentially hazardous emissions should be less than those from the sintering process, because the mass of material is not heated to as high a level as in sintering.

2.4.4 Pig Iron Production

(12) Blast furnace - The blast furnace reduces the iron ore to produce pig iron. Iron-bearing materials (iron ore, sinter pellets, mill scale, open hearth or basic-oxygen-process slag, iron or steel scrap), coke, and fluxes are charged into

the top of the furnace along with heated air. In some instances fuel oil or powdered coal is blown into the bottom. The furnace operates at about 2800°F, with the blast temperature automatically controlled. Many furnaces at present operate at pressures of about 10 psi.[17] The iron ore descends down the furnace and is reduced and melted by the countercurrent flow of the hot reducing gases created by the partial combustion of coke.

Approximately 1000 pounds of coke are required to produce 1 ton of pig iron. Natural gas or fuel oil may also be required, depending on the nature of the charge.

The molten iron is collected in ladles. The hot molten metal typically contains 4 percent C, 1 percent Si, 0.03 percent S, and 1 percent Mn.[17] Slag is flushed from the furnace and is handled in one of three ways: (1) it flows directly into ladles; (2) it is granulated; or (3) it flows directly into cooling pits. Sometimes molten slag of suitable composition is dumped into a specially prepared dump. After weathering for a period of several weeks, it is removed, screened, and sold as aggregate.

Table 2.11 lists typical approximate inputs and outputs of a blast furnace, and Table 2.12 gives a typical analysis of the limestone used in blast furnaces.

Particulate emissions from blast furnaces are minimal, since a high degree of particulate emission control is necessary to keep the stoves (heat exchangers) from plugging. Without controls, about 150 pounds of particulate per ton of product is emitted.[18] Blast furnace slips, which create emissions that

Table 2.11 BLAST FURNACE: INPUT AND OUTPUT MATERIALS[2]

Material	Weight, tons
Input Materials	
Ore and other iron-bearing materials	1.7
Coke or other fuel	0.50 to 0.65
Limestone or dolomite	0.25
Air	1.8 to 2.0
Materials Produced	
Iron	1.0
Slag	0.21 to 0.40
Flue dust	0.05
Blast furnace gases	2.5 to 3.5

Table 2.12 ANALYSIS OF LIMESTONE FROM COLUMBUS, OHIO[7]

Constituent	Percent
SiO_2	0.06
Al_2O_3	0.04
CaO	30.83
MgO	22.27
P	-
S	0.020

bypass the control devices, rarely occur. Table 2.13 presents composition data for collected blast furnace dust; Table 2.14 gives a size analysis of the dust. The collected dust is usually utilized as feed to the sinter machine.

Table 2.13 CHEMICAL ANALYSES OF DRY, BLAST-FURNACE FLUE DUST[7]

Component	Weight Percent: Range for Several Plants	Weight Percent: Midwest Plant
Fe	36.5 - 50.3	47.10
FeO	n.a.	11.87
SiO_2	8.9 - 13.4	8.17
Al_2O_3	2.2 - 5.3	1.88
MgO	0.9 - 1.6	0.22
CaO	3.8 - 4.5	4.10
Na_2O	n.a.	0.24
K_2O	n.a.	1.01
ZnO	n.a.	0.60
P	0.1 - 0.2	0.03
S	0.2 - 0.4	n.a.
Mn	0.5 - 0.9	0.70
C	3.7 - 13.9	n.a.

n.a. - not available.

Table 2.14 SIZE ANALYSIS OF FLUE DUST FROM U.S. BLAST FURNACES[12]

Size: U. S. Series	Size: Microns	Range, percent
20	833	2.5 - 20.2
30	589	3.9 - 10.6
40	414	7.0 - 11.7
50	295	10.7 - 12.4
70	208	10.0 - 15.0
100	147	10.2 - 16.8
140	104	7.7 - 12.5
200	74	5.3 - 8.8
-200	-74	15.4 - 22.6

Slag from blast furnaces can create significant problems of solid waste disposal. Quenching or granulation of slag can also cause air pollution, since the sulfur trapped in the slag reacts to form hydrogen sulfide. It is conceivable that other reactions may also liberate some of the more volatile constituents. Although slag quenching may entail water pollution problems, these were not assessed. About 650 pounds of slag are produced per net ton of hot metal. Table 2.15 gives a typical slag analysis.

Table 2.15 SLAG ANALYSIS[7]

Constituent	Percent
SiO_2	35.8
Al_2O_3	9.0
CaO	39.8
MgO	12.9
S	1.92
Fe	0.25
Mn	1.2

Slag is a useful by-product of iron making, occurring in three forms whose physical structure depends on the method of cooling: these are hard, granulated, and expanded slags. To suppress the hydrogen sulfide pollution from expansion of slag, the Alan Wood Steel Co. of Conshohocken, Pa., investigated a new process called "pelletizing", originally developed by National Slag Limited of Canada. The method involves a rapid accumulation of slag at the point of cooling.[19]

About 6 tons of gases are evolved for every ton of iron produced from the blast furnace. Table 2.16 gives a typical analyses of these gases. Heating value of the raw gas is 90 BTU/ft^3 and the moisture content is 2 percent. The dust concentration is 12 grains/ft^3 as the gases leave the furnace.

Table 2.16 ANALYSIS OF FURNACE GAS[7]

Constituent	Percent
CO_2	15.8
CO	25.6
H_2	3.0
CH_4	55.6

Part of this gas is used for heating purposes. The gases leave the furnace at temperatures of 350 to 540°F and at a flow rate of about 0.508 scfm/lb per hour of pig iron produced (approximately 110,000 to 150,000 ft^3 per ton of pig iron produced). The actual flow rate of the gases is a function of the coke feed rate. Total gas volume increases linearly with the increase of the coke feed rate.

The combustion products of the blast furnace range from 1.2 to 2.8 pounds of combustion gas per pound of pig iron.

Waste water from the blast furnace includes furnace cooling water for cooling the blast air and the process wash water. The furnace cooling water leaves the furnace essentially as received except for the heat added. The gas wash water dissolves contaminants in the vapor phase, including ammonia, phenol, cyanide, and carbon monoxide. The wash water dissolves alkali (sodium and potassium bicarbonates) and other contaminants.

Coke and limestone used in blast furnaces are not stored near the furnace, but are used directly as they are received. Charging of the furnace is automatically controlled.

Hot metal from the furnace is poured into torpedo cars and weighed on the hot metal track scale. After the metal is transferred to a charging ladle, a crane transports it to the steelmaking vessel.[7]

2.4.5 Steel Manufacture

Pig iron is refined into steel in steel furnaces by reducing the level of impurities and adding alloying compounds. Molten steel from the furnaces is cast and formed into the desired shapes. The products are then subjected to finishing operations.

Three types of steel furnaces are in use: open-hearth, electric, and basic oxygen. A significant number of open-hearth and electric furnaces also incorporate oxygen lancing because it permits higher production rates. The four major phases of furnace operations are charging, melt-down, refining, and pouring.

Atmospheric emissions vary substantially among these phases of furnace operation and are greatly increased by the use of oxygen lancing. From the standpoint of potentially hazardous emissions, however, the composition of furnace emissions is primarily a function of the grade of steel being produced (i.e., the amount and type of alloying compounds charged to the furnace) and the scrap metal charge.

(13) Electric furnaces - Electric furnaces are usually used to produce high-alloy steels, although they also produce a considerable amount of mild steel. Oxygen lancing is often used to increase production rates. The electric furnace requires about 400 to 425 kilowatt-hours of power per ton of steel produced.

Particulate emissions from electric furnaces consist primarily of oxides of iron, manganese, aluminum, and silicon. The uncontrolled particulate emission rate is approximately 9 pounds per ton of metal without oxygen lancing and about 11 pounds per ton of metal produced with oxygen lancing. Other emissions include gaseous fluorides at 0.012 pound per ton and particulate fluoride at 0.238 pound per ton of metal produced. About 18 pounds of carbon monoxide gas is emitted per ton of metal produced.

As stated previously, emission composition is dependent upon the type of steel produced. Tables 2.17 and 2.18 present typical data on composition of emissions from electric furnaces.

Approximately 800 to 1200 gallons of water per minute are used to cool the equipment. Little contamination of the water is encountered.[10] Occasionally, extremely high contents of suspended solids, on the order of 5000 ppm, may be present.[6]

Charging cranes bring the raw material in buckets placed on scales. Blower trucks are used to push the lime, coal, and dolomite (the bulk additives) into storage tanks. Buckets are used to move these materials into the furnace.[20]

Table 2.17 CHEMICAL COMPOSITIONS OF ELECTRIC-FURNACE DUSTS[12]

(Percent by weight)

Element or Compound	Sample Designation					
	A	B	C	D	E	F
FeO	4.2	n.a.	n.a.	n.a.	n.a.	4 - 10
Fe_2O_3	35.04	50.55	52.62	52.05	50.05	19 - 44
Cr_2O_3	0.00	0.56	0.00	0.15	13.87	0 - 12
MnO	12.10	12.22	5.34	1.29-2.58	n.a.	3 - 12
NiO	0.30	n.a.	tr	tr	3.18	0 - 3
PbO	n.a.	n.a.	3.47	0.81-1.08	n.a.	0 - 4
ZnO	n.a.	n.a.	8.87	1.24-2.48	n.a.	0 - 44
SiO_2	8.80	5.76	6.78	3.85	5.50	2 - 9
Al_2O_3	12.90	5.85	2.55	14.61	n.a.	1 - 13
CaO	14.90	2.60	6.72	1.40-4.20	9.80	5 - 22
MgO	7.90	7.78	3.49	1.66-4.98	6.64	2 - 15
S	0.26	tr	0.59	n.a.	n.a.	0 - 1
P	0.10	0.28	n.a.	n.a.	n.a.	0 - 1
C	2.30	n.a.	n.a.	n.a.	n.a.	2 - 4
Alkalies	1.20	4.76	n.a.	n.a.	2.50	1 - 11

Note: n.a. – not available, tr – trace

Sample A – Single 20-ton furnace. Plant specializing in tool and die steels.

Sample B – Representative sample from plant with four 75-ton and two 200-ton furnaces producing low-alloy and stainless steels.

Sample C – Single 100-ton furnace producing low-alloy steels for plate.

Sample D – Single 100-ton furnace producing low-alloy steels for plate.

Sample E – Single 70-ton furnace producing stainless steel.

Sample F – Representative samples from multiple-furnace shop. Furnaces vary in size from 4 to 200-ton, producing low-alloy and stainless steels.

Table 2.18 CHANGES IN COMPOSITION OF ELECTRIC-FURNACE DUST DURING A SINGLE HEAT[12]

Period	Composition, weight percent								
	Fe_2O_3	Cr_2O_3	MnO	SiO_2	CaO	MgO	Al_2O_3	P_2O_5	SO_2
Melting	56.75	1.32	10.15	9.77	3.39	0.46	0.31	0.60	2.08
Ore oxidation	66.00	1.32	5.81	0.76	6.30	0.67	0.17	0.59	6.00
Oxygen lancing	65.37	0.86	9.17	2.42	3.10	1.83	0.14	0.76	1.84
Refining	26.60	0.53	6.70	Tr	35.22	2.72	0.45	0.55	7.55

(14) Open-hearth furnaces - Open-hearth furnaces account for a decreasing percentage of steel production because their production rates are low. Although oxygen lancing is widely used to increase production rates, electric furnaces and basic oxygen units are preferred, because of overall economy. A BOF can produce 300 or more tons of steel per hour as compared with the 7 to 10 hours required by an open-hearth furnace.

The finishing temperature of steel in an open-hearth steel heat is about 2900°F. About 4 million BTU/ton of metal produced are required, the heat usually supplied by combustion of fuel oil or natural gas. Fuel consumption decreases considerably when oxygen lancing is used.

Emissions from open-hearth furnaces consist of particulates and fluorides. Fluoride emission rates depend on the fluorspar content of the ore. Uncontrolled particulate emissions from a furnace without oxygen lancing are about 8.3 pounds per ton of product; with oxygen lancing, emissions range from 9.3 to 22.0 pounds per ton. These emissions include 0.10 pound of gaseous fluoride and 0.03 pound of particulate fluorides per ton of product. Table 2.19 presents data on chemical composition of particulate emissions.

The flow rates of gases range from 10,000 to 75,000 scfm. The temperatures of gases range from 460 to 1800°F, and gases must be cooled before entering air pollution control equipment.

Large quantities of water are required for cooling, generally ranging from about 750 gpm for small furnaces to as much as 1500 gpm for larger units. The water is acidic, and most of it is recovered. The only water loss is that

Table 2.19 CHEMICAL COMPOSITIONS OF OPEN-HEARTH PARTICULATE EMISSIONS, OXYGEN LANCING [12]

(Percent by weight)

Element or Compound	U. S. Steel Corp.		Steel Co. of Canada	United Kingdom	Germany	U. S. Plant [a]
	Edgar Thomson	Homestead	Hilton Works	United Steel Co.	Dillingen	
Fe_2O_3	89.07	88.70	n.a.	88.5	79.65	n.a.
FeO	1.87	3.17	n.a.	2.2	0.31	n.a.
Total Fe	63.70	n.a.	63.5 - 68.0	n.a.	55.90	59.40
SiO_2	0.89	0.92	1.16 - 1.56	0.4	0.47	2.00
Al_2O_3	0.52	0.67	0.15 - 0.44	0.4	0.52	0.48
CaO	0.85	1.06	0.68 - 1.06	0.9	0.88	1.85
MgO	n.a.	0.39	0.32 - 0.44	1.5	1.86	1.12
MnO	0.63	0.61	n.a.	n.a.	0.61	n.a.
Mn	n.a.	n.a.	0.43 - 0.55	n.a.	n.a.	0.28
CuO	n.a.	0.14	n.a.	n.a.	n.a.	n.a.
Cu	n.a.	n.a.	0.11 - 0.16	n.a.	n.a.	0.08
ZnO	n.a.	0.72	0.26 - 2.04	n.a.	n.a.	n.a.
Zn	1.70	n.a.	n.a.	n.a.	n.a.	0 - 3.0
PbO	n.a.	n.a.	n.a.	n.a.	n.a.	n.a.
Pb	0.50	n.a.	0.05 - 0.95	n.a.	n.a.	n.a.
SnO_2	n.a.	n.a.	n.a.	n.a.	n.a.	n.a.
Cr	n.a.	n.a.	0.06 - 0.11	n.a.	n.a.	n.a.
Ni	n.a.	n.a.	0.03 - 0.05	n.a.	n.a.	0.07
P_2O_5	0.47	1.18	n.a.	n.a.	1.52	n.a.
P	n.a.	n.a.	0.06 - 0.12	0.3	n.a.	0.15
S	0.40	0.92	0.34 - 0.70	1.4	2.69	2.78
Alkalies	1.41	n.a.	0.56 - 1.71	n.a.	2.72	2.88

Note: n.a. - data not available.

a) Average for U.S. Plant.

associated with collected sludge. The other source of waste water is the blowdown from the waste heat boiler.

The material to be charged to the furnace is loaded in charging boxes and moved to the furnace on diesel locomotives operating on broad-gauge track laid close to the furnace.

15) Basic Oxygen Furnaces - The basic oxygen process is being used increasingly because of its high production rates. It converts the hot metal into steel by oxidation of carbon, phosphorus, silicon, sulfur, and other impurities in the iron. Table 2.20 gives typical operating data for a basic oxygen furnace.[17] The furnace is charged with scrap (30%), molten iron (70%), and fluxes, chiefly burned lime and fluorspar. Oxygen is blown into the charge under pressure (generally from 140 to 180 psi) to oxidize the carbon, silica, phosphorus, and sulfur. When the flow is completed, the steel is tapped into a ladle. Alloying materials are added to the ladle. The basic oxygen process requires no external source of heat.

Table 2.20 OPERATING DATA FOR BASIC OXYGEN FURNACE[17]

	Small	Large
Capacity, ton/melt	140	250
Oxygen lance rate, lb/hr	85,000	152,000
Oxygen lance rate, scfm	16,800	30,000
Operating cycle, minutes	50	
Charge scrap	5	
Charge hot metal	3	Throttled flow
Charge lime	1	
Blow	20	
Sample	3	Full flow to scrubber
Finish blow	2	
Top	3	
Pour slag	3	Throttled flow
Idle	5-10	

The particulate emission rate is so high that all basic oxygen units eventually must install high-efficiency particulate control devices. About 51 pounds of particulate are produced per ton of product, and about 0.20 pound of gaseous fluorides per ton. Tables 2.21 and 2.22 give the chemical composition of dust from a basic oxygen furnace.

Table 2.21 CHEMICAL COMPOSITION OF BASIC OXYGEN FURNACE STEEL-MAKING DUST FROM THREE TYPICAL U.S. PLANTS, WEIGHT PERCENT[12]

Element or Compound	Typical	BOF Dust from U. S. Plants		
FeO	1.5	n.a.	n.a.	n.a.
Fe_2O_3	90.0	80.00	n.a.	n.a.
Fe	n.a.	n.a.	56.0	57.68
Mn_3O_4	4.4	n.a.	n.a.	n.a.
Mn	n.a.	0.35	1.2	1.54
SiO_2	1.25	2.00	1.9	1.29
Al_2O_3	0.2	0.15	0.4	0.13
CaO	0.4	5.10	3.1	3.59
MgO	0.05	1.10	n.a.	0.63
S	n.a.	0.12	0.09	0.12
P	n.a.	0.10	0.2	0.09
P_2O_5	0.3	n.a.	n.a.	n.a.
Cu	n.a.	0.04	0.03	n.a.
Zn	n.a.	Trace	1.93	4.80

Note: n.a. - data not available.

Table 2.22 DUST AND METAL ANALYSES FOR VACUUM-TREATED STEELS[12]

Material	Elements, weight percent								
	C	Mn	Si	Ni	Cr	V	Mo	Cu	Fe
Steel in ladle	0.33	0.73	0.25	2.86	0.99	0.22	0.53	0.17	-
Dust	1.66	46.30	1.63	0.38	0.36	0.01	0.05	1.60	17.60
Steel in ladle	0.33	0.83	0.26	0.17	1.01	0.23	1.21	0.14	-
Dust	1.69	47.70	1.40	0.13	0.38	0.04	0.09	1.20	15.50

In operation of basic oxygen furnaces there is a possibility of formation of flaking black material called "kish" as an emission. Kish forms spontaneously whenever hot metal with carbon content greater than 4.5 percent is cooled below the liquidous temperature.[2] This results in the formation of solid Fe_3C, which is unstable and decomposes into graphite and iron.[21] Usually the kish is formed when the hot metal is transferred into and out of the ladle.

Gas effluents ranging from 200,000 to 1,200,000 acfm are emitted from the basic oxygen furnace at temperatures between 3000 and 3500°F. These gases carry 300 pounds or more of oxide dust per minute. Most of the dust is very finely divided, ranging in size from 0.1 to 1 micron.[23] About 40 to 70 pounds of Fe_2O_3 are ordinarily collected per ton of steel produced.[22]

Table 2.23 CALCULATED GAS COMPOSITION FOR 100-TON BOF BLOWN AT 12,000 SCFM O_2 RATE FOR 20 MINUTES [25]

	Converter emissions			Peak gas flow rates after combustion, SCFM		Peak hood gas flow rates, ACFM			
						Lower portion of hoods		Leaving hoods	
	Total/heat		Peak rate SCFM	Tight hood (10% combustion)	Open hood (20% excess air)	Tight at 3200F	Open at 4000F	Tight at 1800F	Open at 3000F
	lb	SCF							
CO	11,800	161,000	24,000	21,600	0	152,000	0	94,000	0
CO_2	2,800	24,000	0	2,400	24,000	16,900	206,000	10,400	160,000
O_2	-	-	-	0	2,400	0	20,600	0	16,000
N_2	-	-	-	4,510	54,150	31,800	465,000	19,600	361,000
Total	14,600	185,000	24,000	28,510	80,550	200,700	691,600	124,000	537,000
Combustion	Open	1,426,000							
Air Induced	Tight	114,200		5,710	68,550				

Concentrations of dust during the blow are reported to be from 6 to 15 gr/scf.[17]

(16) Degassing - Degassification of molten steel under vacuum improves its physical properties. The liquid steel may absorb gases, particularly hydrogen, from the atmosphere and raw materials. Oxygen and nitrogen combine with alloying elements to form oxides, cyano-nitride, or nitride compounds. All of these impurities are removed by vacuum degassing, which is done by three methods: stream degassing, circulation degassing, and ladle degassing. All of these methods cause emission of gases containing CO, CO_2 and H_2. Nitrogen and argon are present in the offgases from air in the system. Water vapor is also present. Particulate is emitted from the operation.

2.4.6 Casting and Finishing Operations

(17) Casting and finishing operations - The molten degassed steel either is cast continuously into products of the desired shape or is cast into ingots for subsequent forming. Before steel can be rolled, surface defects must be removed by scarfing. Jets of oxygen are directed at the surface of the steel, which is maintained at high temperatures, causing localized melting and subsequent oxidation of the steel. The steel products are then subjected to a number of finishing operations such as pickling.

Atmospheric emissions occur as a result of pouring steel into the molds, volatilization of the mold coating compounds and hot-tops, and addition of volatile metals to the mold, such as lead in the production of leaded steel. Emissions

from the rolling operation are minor. Potentially hazardous emissions from steel scarfing may be significant depending upon the type of steel.

Pickling entails no significant atmospheric emissions; it can cause serious water pollution, however, since pickling is a treatment of steel in an acid bath to remove oxide from the metal surface. Both sulfuric acid and hydrochloric acid are used in the baths. Discharge from the pickling operation generally includes spent strong pickle liquor and acidic rinse water, which must be neutralized before it can be safely discharged.

2.4.7 Coking

Coke is the major fuel and reducing agent used in the blast furnace to produce pig iron. Over 98 percent of the total production of metallurgical coke is made by the by-product process. During manufacture and processing of coke by-product emissions are generated by the coke oven and the by-product chemical recovery unit. Figure 2.1 shows the coke oven and the chemical recovery unit. A more detailed schematization of coke plant operation is shown in Figure 2.2.

(18) Coke oven - The coking operation includes: (1) coke handling, (2) oven charging, (3) oven operation, pushing and quenching, and (4) coke production. The coke produced contains typically 5 percent moisture, 0.8 percent volatile matter, 89.7 percent fixed carbon, 9.5 percent ash, and 0.9 percent sulfur.[7]

Emissions from coal handling are primarily fugitive dust occurring at the coal storage operation and subsequent transfer

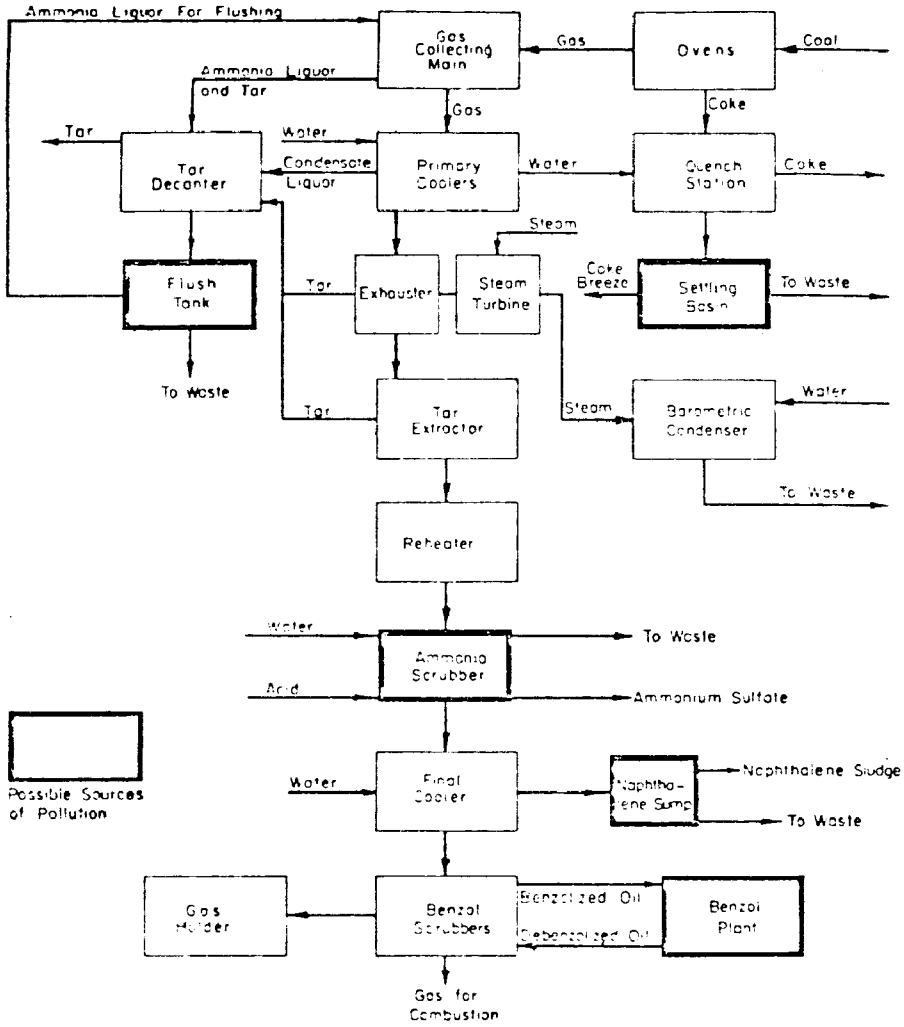

Figure 2.2 Coke plant operation.[24]

points. Emissions are on the order of 10 pounds/year-ton of material stored. During the charging operation, smoke, tar vapors, and gases are formed by the pyrolysis of coal and discharged through open charging ports. Atmospheric emissions during pushing are due to the smoking of incompletely coked coal and the entrainment of coke particles in thermal updrafts created by the hot coke discharged from the oven. Coke particles are also entrained in the steam plume resulting from coke quenching. Furthermore, waste waters from the by-product recovery plant, containing phenols, ammonia, and undoubtedly many other contaminants, are often used for quenching the hot coke. Thus the coke-quenching operation is a source of potentially hazardous emissions. The burning of coke oven gas for underfiring the ovens is a source of sulfur oxide emissions. Virtually all of the sulfur present in coke oven gas is present as hydrogen sulfide, approximately 3.5 to 4.5 grams of hydrogen sulfide per cubic foot of coke oven gas. A few plants remove 70 to 90 percent of the hydrogen sulfide from coke oven gas. Wastes from the coke plant are segregated in a separate circulating system with the exception of the ammonia-still waste, which contains about 10 ppm of phenols and is sent to the waste treatment plant for disposal. An average of 12,000 ft^3 of gas is produced per ton of coal coked, along with 10 gallons of tar, 35 gallons of light oil, and 19 pounds of ammonium sulfate.[7]

The by-product processing operation entails a variety of steps, any of which, such as thiocyanate discharge, can create potentially severe water pollution problems.

Barges bring the coke to the unloading dock at the coke plant and deliver it to stock pits through belt conveyors. A bull-dozer loads the material into a track hopper.

After quenching and cooling, oven coke is discharged onto coke wharves, then conveyed to screening units. Railroad cars move the furnace coke to blast furnaces.

(19) By-product chemical recovery unit - The gases produced in coke ovens contain many valuable chemicals that may be recovered. These include ammonia, benzene, xylene and toluene, phenol, and napthalene. As a part of recovery operations, the gases are first washed with water to produce a weak ammonia liquor. This liquor is very high in ammonia chloride and contains phenol, cyanide, and thiocyanates. Sources of contaminated waste liquor include discharge from ammonia, phenol, and benzol recovery operations. These wastes contain phenol, ammonia, chloride, and light oil.[24] In 1973 only one company in the United States recovered sulfur as a by-product from coke industry. Table 2.24 gives emission factors for by-product coke manufacturing without controls.

2.4.8 Direct Metal Reduction Processes

Many direct reduction methods are in current operation, most of them in Europe. The direct reduction method bypasses the blast furnace. Two plants are under construction in the United States for production of iron by different direct-reduction processes. Data on the amount and characteristics of emissions are not yet available.

Table 2.24 EMISSION FACTORS FOR BY-PRODUCT COKE MANUFACTURE WITHOUT CONTROLS[a] [18]

Type of operation	Particulates		Sulfur dioxide		Carbon monoxide		Hydrocarbons[b]		Nitrogen oxides (NO_2)		Ammonia	
	lb/ton	kg/MT	lb/ton	kg/MT	lb/ton	kg/MT	lb/ton	kg/MT	lb/ton	kg/MT	lb/ton	kg/MT
By-product coking[c]												
Unloading	0.4	0.2	–	–	–	–	–	–	–	–	–	–
Charging	1.5	0.75	0.02	0.01	0.6	0.3	2.5	1.25	0.03	0.015	0.02	0.01
Coking cycle	0.1	0.05	–	–	0.6	0.3	1.5	0.75	0.01	0.005	0.06	0.03
Discharging	0.6	0.3	–	–	0.07	0.035	0.2	0.1	–	–	0.1	0.05
Quenching	0.9	0.45	–	–	–	–	–	–	–	–	–	–
Underfiring[d]	–	–	4	2	–	–	–	–	–	–	–	–

[a]Emission factors expressed as units per unit weight of coal charged.
[b]Expressed as methane.

[c] 5. The sulfur dioxide factor is based on the following representative conditions: (1) sulfur content of coal charged to oven is 0.8 percent by weight; (2) about 33 percent by weight of total sulfur in the coal charged to oven is transferred to the coke-oven gas, (3) about 40 percent of coke-oven gas is burned during the underfiring operation and the remainder is used in other parts of the steel operation where the rest of the sulfur dioxide is discharged; about 6 lb/ton (3 kg/MT) of coal charged; and (4) gas used in underfiring has not been desulfurized.

2.5 MAJOR POLLUTANT SOURCES

Though most of the processes in the industry could be major sources of pollution if uncontrolled, sintering and by-product coke ovens represent the most significant emissions sources from the purview of tonnage emitted and emission characteristics. The pollution aspects of these processes are briefly reviewed below. They are discussed in more detail in the preceeding section.

° Sintering operations - This is the predominant process of all four agglomeration processes used in the iron and steel industry. As discussed in Section 2.4, sintering can also be a source of potentially hazardous emissions. The emission factor for the operation is 42 pounds of particulate per ton of sinter produced. The industry is experiencing difficulty in achieving emission reductions near 100 percent. At present, with only 90 percent emission control, annual emissions are estimated to be 107,000 tons.

° Coke ovens - By-product coke production is an integral part of major iron and steel plants. The coke ovens, per se, are the major emission source from by-product coke production. The gases emitted contain coal pyrolysis products. Sulfur is present as hydrogen sulfide. A few plants remove 70 to 90 percent of the H_2S from coke oven gas. An average of 12,000 cubic feet of gas is produced per ton of coal charged along with 10 gallons of tar, 3.5 gallons of liquid oil and 19 pounds of light oil.[24] In addition fugitive dust is emitted from coal handling and transferring operations.

REFERENCES FOR CHAPTER 2

1. Reno, H.T. and F.E. Brantley. Iron, In: Minerals Facts and Problems. U.S. Dept. of the Interior, 1970 Ed.

2. McGannon, H.E. The Making, Shaping and Treating of Steel. Pittsburgh, Pennsylvania. U.S. Steel Company.

3. Kirk-Othmer. Encyclopedia of Chemical Technology, New York. Wiley and Sons, Inc., 1966.

4. Lee, Oscar. Taconite Beneficiation Comes of Age at Reserve's Babbitt Plant. Mining Engineering, May 1954.

5. Sisselman, Robert. Iron Ore in the U.S., A Profile of Major Mining, Processing Facilities.

6. Miller, J.R. Impurities in Iron Ore, Columbus, Ohio. Battelle Memorial Laboratories.

7. Labee, C.J. Steel Making Weirton Iron and Steel Engineer. Oct. 1969.

8. Merrit, P.C. Mesabi Enters a New Era. Mining Engineering, Oct. 1965.

9. At Reserve Mining Trial on Lake Fibers, emphasis shift to economic impact. Engineering and Mining Journal. March 1974.

10. Aiken, G.E., and others. Streamlining the North American Taconite Industry, Society of Mining Engineering, October 1973.

11. Vandergrift, A.E. and others. Particulate Air Pollution In The United States. Journal of the Air Pollution Control Association, Vol. 21, No. 6, June 1971.

12. Varga, J. Jr. and Lonnie, H.W. A Final Technological Report on a Systems Analysis Study of the Integrated Iron and Steel Industry, Battelle Memorial Institute, Columbus, Ohio.

13. Exhaust Gases from Combustion and Industrial Processes. Engineering Science, Incorporated, October 2, 1971.

14. Lund, H.F. Industrial Pollution Control Handbook, New York, McGraw Hill Book Company, 1971.

15. Frame, C.P. and Elson, R.J. The Effects of Mechanical Equipment on Controlling Air Pollution at No. 3 Sinter Plant, Indiana Harbor Works, Inland Steel Company - Journal of Air Pollution Control Association, December, 1963.

16. Benett, R.L., R.E. Hagen and M.V. Mielke. Nodulizing Iron Ores and Concentrates at Extaca. Mining Engineering, Jan. 1954.

17. Uys, J.M. and J.W. Kirkpatrick. The Beneficiation of Raw Materials in the Steel Industry and Its Effect Upon Air Pollution Control. Journal Air Pollution Control Association. January 1963.

18. Compilation of Air Pollutant Emission Factors. EPA Contract No. CPA-22-69-119.

19. Jablin, Richard. Expanding Blast Furnace Slag Without Air Pollution. Journal of Air Pollution Control Association. Vol. 22, No. 3. March 1972.

20. Yard, E.M. and P.D. Nyajust. Open Hearths are Replaced by Electric Furnaces. Iron and Steel Engineer, July 1967.

21. Haltgram, R., Fundamentals of Physical Metallurgy, Prentice Hall, New York. 1952.

22. Wheeler, D.H. The Iron and Steel Industry Proceedings at the Electrostatic Precipitator Symposium sponsored by APCA/EAA. Feb. 23-25.

23. Parker, C.M. Basic Oxygen Furnace Air Cleaning Experiences. Journal of the Air Pollution Control Association, Vol. 16, No. 8, August 1966.

24. Proceedings of 24th Purdue Industrial Waste Conference, 1969.

25. Industrial Gas Cleaning Institute, Inc. Air Pollution Control Technology and Costs in Nine Selected Areas. Prepared for EPA, Sept. 1972, Contract No. 68-02-0301.

3.0 FERROALLOY INDUSTRY SEGMENT

3.1 INDUSTRY BACKGROUND[1]

The main use of ferroalloys in the United States is in the deoxidation, alloying and graphitization of steel. The ferroalloys consist of iron in combination with one or more other elements, including silicon, chromium, manganese, and many other elements in lesser amounts.

The United States is the world's leading producer of ferroalloys, production totalling 2.69 million short tons in 1971. Table C-1 in Appendix C lists the tonnage of each ferroalloy produced. Twenty-nine companies reported ferroalloy production in 1971; the individual plants are listed in Table C-2, Appendix C. Plants in Ohio and Pennsylvania accounted for more than half of the total tonnage. Production was also reported from Alabama, Florida, Idaho, Kentucky, Montana, New Jersey, New York, Oregon, South Carolina, Tennessee, Texas, Virginia, Washington, and West Virginia. Most ferroalloy plants are located in areas of low-cost electricity, where shipping facilities are readily available.

Major technological trends in the ferroalloy industry during the past 5 years have been the use of larger furnaces, improved material handling procedures, and new tech-

niques of solidifying molten alloys. A recent development is the electroslag remelting process for steel refining.

The ferroalloy industry faces serious competition from foreign producers who are capable of producing ferroalloys at lower cost than domestic producers. Imports account for about 40 percent of the domestic market.

3.2 RAW MATERIALS[2]

Manganese is the most widely used element in ferroalloys, followed by silicon, chromium, and phosphorous. Others include molybdenum, tungsten, titanium, zirconium, vanadium, niobium, boron, and columbium. Significant quantities of limestone, coke, and alumina are used as charge materials. About 75 pounds of carbon electrodes per gross ton of ferromanganese are consumed in electric furnaces; this amount however, varies widely with raw materials and with type of furnace.

The United States imports almost all of the required chromium and manganese ores from other countries. The imported chromium ores contain about 45 to 53 percent chromium oxide (Cr_2O_3); manganese ore contain 43 to 54 percent manganese. Silicon is an abundant commodity in the U.S., significant deposits occuring in Washington, Oregon, Montana, Idaho, California, Missouri, Illinois, Ohio, Alabama, Tennessee, Kentucky, West Virginia, Pennsylvania, and New York. Analysis of most of the available ores shows 95 percent or more SiO_2. Phosphorous in the elemental state is not required for ferrophosphorous production, as it is

recovered as a by-product of the thermal-reduction method of obtaining elemental phosphorous from phosphate rock. The Tennessee phosphorous industry is the main source of ferro-phosphorous.

3.3 PRODUCTS

Various kinds and grades of ferroalloys are produced. The main products, listed in Figure 3.1 are ferrophosphorous (FeP), ferrochromium (FeCr), ferromanganese (FeMn), ferro-silicon (FeSi), silicomanganese (SiMn), silvery iron (FeAg), spiegeleisen (FeMn), ferroboron (FeB), ferrocolumbium (FeCb), ferrotitanium (FeTi), ferrovanadium (FeV), ferronickel (FeNi), ferromolybdenum ($FeMo_2$), and ferrocolumbium-titanium (FeCbTi). Pure manganese and silicon metals are also pro-duced.

3.4 PROCESS DESCRIPTION

Figure 3.1 illustrates the ferroalloy segment. The ores are beneficiated, reduced in one of three types of furnaces, and cast. The processes and their emission potentials are described in the following sections. Sub-stantial fuel usage or other extraordinary energy require-ments are identified.

3.4.1 Ore Handling and Beneficiation

(1*) Ore handling and beneficiation - The ores are used as received from the mine or beneficiated, depending upon ore quality and process requirements. Since most ores meet specific

---

* Numbers refer to corresponding processes in Figure 3.1.

process requirements when purchased, beneficiation is usually unnecessary.

The ore and other necessary raw materials are usually transported to the plant by rail. The materials are stored and subsequently sized and mixed to meet process requirements. Periods of rain or unusually cold weather may necessitate drying of the ore. After mixing, blending, and sizing are complete, the charge is weighed and subsequently fed to a furnace.

All handling operations are potential sources of fugitive dust emissions. Reported particulate emissions from materials handling are approximately 10 pounds per ton of alloy produced.[3]

3.4.2 Smelting

Furnace operation in the smelting of ferroalloys constitutes the major pollution problem. At present three types of furnaces are used in ferroalloy production: the electric furnace, the aluminothermic furnace, and the blast furnace. Of the 48 ferroalloy-producing plants, three use blast furnaces, five use aluminothermic furnaces, and the rest use electric furnaces.

(2) Electric furnaces - The design and operation of all ferroalloy-producing electric furnaces are essentially the same. The typical furnace is of the submerged-arc type. Raw ore, a reducing agent, such as alumina, coal, and/or coke, and slagging materials such as silica or gravel, are charged to the furnace in appropriate quantities. The intense heat

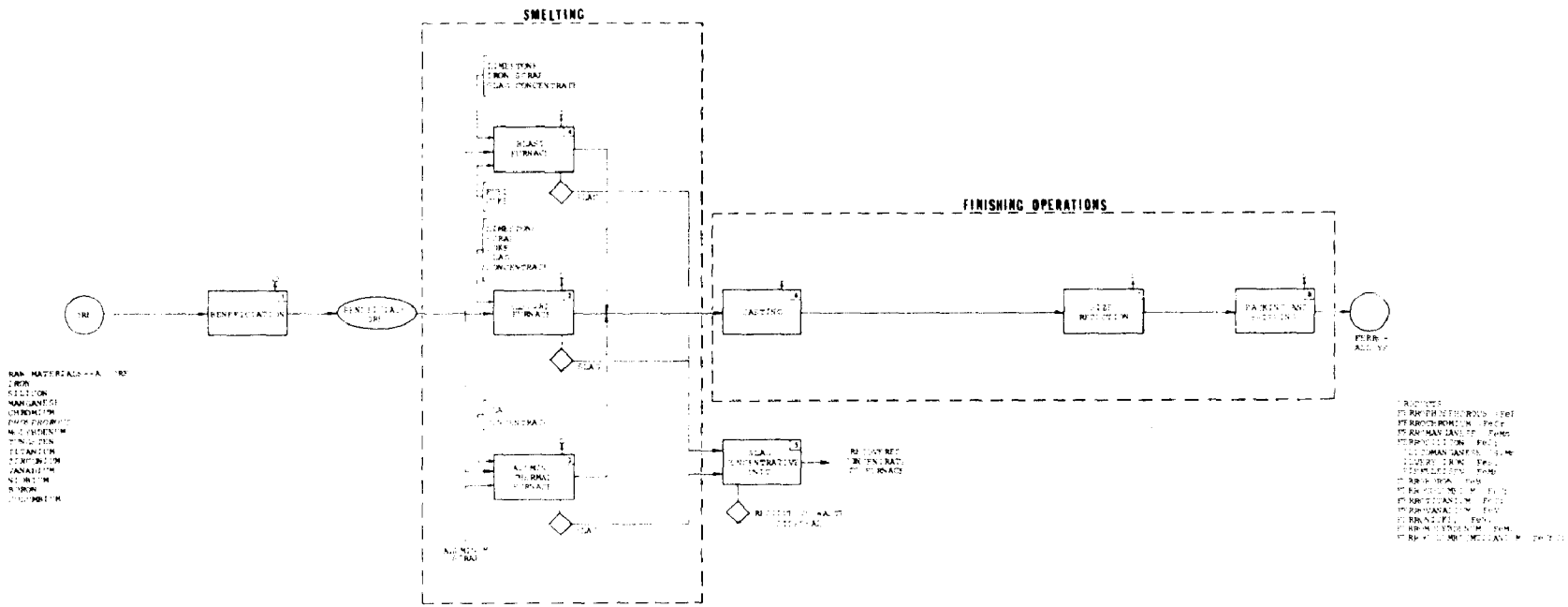

Figure 3.1. Ferroalloy production.

zone (4000 to 5000°F) around the carbon electrodes is responsible for the carbon reduction of the metallic oxides present. The various impurities are trapped in the slag and the molten ferroalloy is tapped from the bottom of the furnace and cast.

The power required for the furnace ranges from 3000 to 3600 KWH, per ton,[2] depending on the grade of ore and the type and size of the furnace.

Emissions from electric furnaces vary widely, depending upon the ferroalloy being produced, the type of furnace, and the carbon content of the alloy. Large quantities of gases are released during electric furnace operation. The gases are produced as a result of carbon reduction, moisture in the raw material, thermal decomposition of the raw ore, vaporization of volatile components, and intermediate reactions releasing gases as products. The quantity of gas generated is approximately proportional to the electrical energy input; the exhaust rates for the common alloys are presented in Table 3.1. Approximately 70 percent by volume of the released gases is carbon monoxide. Other gaseous components are volatilized metallics, sulfur oxides, cyanides, phenols, and oil. In an open electric furnace the released gases are combusted and virtually all the carbon monoxide, cyanides, and phenols are destroyed. In a covered electric furnace, however, the offgases are not combusted; phenols and cyanides are emitted in significant quantities.[4]

Table 3.1 EXHAUST FLOW FROM ELECTRIC FURNACES PROCESSING COMMON FERROALLOYS[3]

Product	(SCFM/MW)
Silicon Metal	140-150
50% Ferrosilicon	130-140
Standard Ferromanganese	160-170
Silicomanganese	120-130
Ferrochrome-Silicon	110-120
H.C. Ferrochrome	80-90
Calcium Carbide	70-80

(Based on gas saturated at 100°F, scf at 30 in. Hg, 60°F)

Particulates from electric furnaces are generally oxides of the materials present in the ore. Table 3.2 gives typical particulate emission rates for various types of ferroalloys; Table 3.3 gives the characteristics of fumes for various types of furnaces and alloys.

Table 3.2 PARTICULATE EMISSIONS FROM FERROALLOY PRODUCTION[3]

Source	Quantity of Material	Emission Factor*
B. Electric-Arc Furnaces	317,000 tons, ferromanganese	44 lb/ton
	285,000 tons, silicomanganese	195 lb/ton
	665,000 tons, ferrosilicon	357 lb/ton
	96,000 tons, silicon metal	583 lb/ton
	166,000 tons, silvery iron	120 lb/ton
	590,000 tons, ferrochrome, ferrophosphorus	200 lb/ton

* per ton of product.

When a wet scrubber is used to control furnace emissions, the waste water may contain cyanides and phenols scrubbed from the offgases. The waste water may also

Table 3.3 TYPICAL CHARACTERIZATIONS OF FERROALLOY FURNACE FUMES[3]

Furnace Product:	50% FeSi	SMZ*	SiMn**	SiMn**	FeMn	H.C.FeCr	Chrome Ore-Lime Melt	Mn Ore**-Lime Melt
Furnace Type	Open	Open	Covered	Covered	Open	Covered	Open	Open
Fume Shape	Spherical, sometimes in chains	Spherical, sometimes in chains	Spherical	Spherical	Spherical	Spherical	Spherical and irregular	Spherical and irregular
Fume Size Characteristics (μ)								
Maximum	0.75	0.8	0.75	0.75	0.75	1.0	0.50	2.0
Most Particles	0.05-0.3	0.05-0.3	0.1-0.4	0.2-0.4	0.05-0.4	0.1-0.4	0.05-0.2	0.2-0.5
X-Ray Diffraction								
Primary	← All fumes were primarily amorphous →							
Trace Constituents	FeSi $FeSi_2$	Fe_3O_4 Fe_2O_3 Quartz SiC	Mn_3O_4 MnO Quartz	Quartz SiMn Spinel	Mn_3O_4 MnO Quartz	Spinel Quartz	Spinel	CaO
Chemical Analysis - %								
SiO_2	83-88	61.12	15.68	24.60	35.48	20.36	10.66	7.28
FeO		14.08	6.75	4.60	5.96	10.92	7.48	1.22
MgO		1.08	1.12	3.78	1.03	15.41	7.43	0.96
CaO		1.01	--	1.58	2.24	--	15.06	34.24
MnO		6.12	31.35	31.92	33.60	2.84	--	12.34
Al_2O_3		2.10	5.55	4.48	8.38	7.12	4.88	1.36
LOI		--	23.25	12.04	--	--	13.86	11.92
TCr as Cr_2O_3		--	--	--	--	29.27	14.69	--
SiC		1.82	--	--	--	--	--	--
ZrO_2		1.26	--	--	--	--	--	--
PbO		--	0.47	--	--	--	--	0.98
Na_2O		--	--	2.12	--	--	1.70	2.05
BaO		--	--	--	--	--	--	1.13
K_2O		--	--	--	--	--	--	13.08

* Si - 60-65%; Mn - 5-7%; Zr - 5-7%.

** Manganese fume analyses in particular are subject to wide variations, depending on the ores used.

contain dissolved solids, iron, zinc, aluminum, chlorides, and copper. Disposal of the waste water can be a problem.[4]

(3) Aluminothermic furnaces - The aluminothermic process for preparing ferroalloys involves the co-reduction of iron oxides and other metallic oxides by aluminum. The charge to the furnace consists of raw ore, aluminum powder, iron scrap or mill scale, a thermal booster such as sodium chlorate, and a fluxing agent, usually lime or fluorspar. The reaction may be initiated by two methods. One involves ignition of the mix with an electrical arc from submerged electrodes. The other method involves use of a small quantity of a mixture of aluminum with barium peroxide to ignite a priming batch, to which the charge is slowly added. After initial ignition occurs, the reaction is highly exothermic and the smelt is accomplished with no further addition of energy. The temperature of the reaction is controlled by adjusting the size of the charge particles and the feed rate of the charge, or by replacing some of the aluminum with a milder reductant, such as calcium carbide, silicon, or carbon. The ferroalloy is tapped from the bottom of the furnace and cast. Typical ferroalloys produced by this method include ferroboron, ferrochromium, ferroniobium, ferromolybdenum, ferrotitanium, ferrotungsten, and ferrovanadium.

As with electric furnaces, emissions from aluminothermic furnaces vary widely in type and quantity, depending upon the ferroalloy and the physical characteristics of the

charge. Large amounts of gases are released, consisting of volatile metallics, water vapor, carbon monoxide, and other gases absorbed in the charge materials. Particulate emissions are substantial because of the fineness of the charged materials and the violence of the reaction. The composition of the particulates emitted varies widely with different ore compositions; emissions consist primarily of oxides of the different charging materials.

Water pollution problems arise only with the use of wet scrubbers. The scrubber waste water may contain cyanides, phenols, dissolved solids, iron, aluminum, zinc, chlorides, and copper.

4) Blast furnaces - Blast furnaces are of minor importance in the production of ferroalloys. At present only three are in operation in the United States. Two produce ferromanganese and the other produces silvery iron.

The charge consists of raw ore, iron ore, coke, and limestone. The furnace is fired with fuel oil or natural gas, and usually operated at around 1430°C, just above the slag formation temperature of 1426°C. The ores undergo carbon reduction and the ferroalloy sinks to the bottom of the furnace, where it is tapped and cast. Temperature of the exit gases is usually between 700 and 900°F.

Since the basis of operation of the blast furnace is carbon reduction, the major constituent of the gases emitted is carbon monoxide. Other gaseous components are volatilized

metallics, sulfur oxides, and various organics. Most of the combustible gases, especially CO, are burned before being emitted to the atmosphere.

The escaping gases may carry large quantities of dense smoke, created by the disintegration of coke and ore and by vaporization and condensation of various materials. About 410 pounds of particulates are emitted per ton of ferroalloy produced. Approximately 20 percent of the particulates emitted consist of particles larger than 20 microns. The remaining 80 percent consist of particles in the range of 0.1 to 1.0 micron.

Blast furnace operation entails no significant water or solid waste problems.

3.4.3 Slag Processing

(5) Slag processing - The slag is treated by two methods: concentration and shotting. In the concentration process, the slag is dumped in water, where metal particles sink to the bottom and are recovered while the slag floats and is removed. The recovered metals and other wastes from the shipping department are recycled to the furnace charge; as high as 30 percent of the charge may be recycled material. The concentration process is generally used on ferrochromium slags. The shotting method, which involves the granulation of molten slag in water, may be used on ferromanganese slags. The main problem in slag processing is water pollution in the form of suspended solids and dissolved metallics,

such as manganese and chromium. The waste water may also contain a small amount of oil.

3.4.4 Finishing Operations

(6) Casting - Hot metal from the furnace is usually cast in ingot form in various types of molds depending on the ferroalloy produced. Several kinds of mold coatings and toppings are used. After sufficient cooling and solidification, the casts are removed from the molds, graded, and placed in hot metal skip boxes, where the alloy is held for further processing. The casts are processed by hand breaking or by use of pneumatic breakers, depending on the ease with which they can be broken. At some plants the ferroalloy casts are washed free of disintegrated slag (prior to breaking) to insure cleanliness.

(7) Sizing - The broken material from the casts is passed through a crusher and screen to produce materials of uniform size. Cranes are used for feeding the crushers. If two crushers are used, material from the primary crusher is transferred to the secondary crusher by belt conveyors.

The crushing and screening operations result in particulate emissions that may be easily controlled.

(8) Packing and shipping - The crushed and screened material is shipped in bulk form or is packaged in containers. The crushing, screening, grading, and packing are mostly accomplished in the same unit to minimize handling of materials. If direct packing cannot be accomplished, the sized materials are stored by grade in metal tote boxes, skips, or bulk

floor bins. The package is weighed, inspected, topped off, covered, and stenciled, then placed in temporary storage or loaded directly for shipment by truck or rail.

These packing and shipping operations also cause small quantities of particulate emissions.

3.5 MAJOR POLLUTANT SOURCES

Smelting is the major source of pollutants in the ferroalloy industry. Of the three types of furnaces in operation, the blast furnace is least important, since only three blast furnaces are in operation. Not much information is available on the aluminothermic furnace, but it is assumed that the pollution will be similar to that from electric furnaces.

° Electric furnaces - The emissions from the furnace vary widely in type and quantity depending upon the particular ferroalloy being produced, type of furnace used and the carbon content of the alloy. Approximately 70 percent of the gas released is carbon monoxide. Other gas components are volatilized metallics, sulfur oxides, cyanides, and phenols. The phenols and cyanides are absorbed into the scrubber water and precautions are necessary. Because of the nature of the raw materials introduced, the gases released are mostly toxic.

The emission factor for electric furnaces is 240 pounds of particulate per ton of ferroalloy. In 1968 the net control achieved for controlling particulate emissions from electric furnaces in the United States was less than 50 percent.[3]

REFERENCES FOR CHAPTER 3

1. Fisher, F. L., Ferroalloys, In: Minerals Year Book. U.S. Bureau of Mines. 1971.

2. McGannon, H.E. The Making, Shaping and Treating of Steel.

3. Vandegrift, Dr. A.E., et al. Particulate Pollutant System Study. Volume III - Handbook of Emission Properties, E.P.A., Contract No. CPA22-69-104, May 1971.

4. U.S. Environmental Protection Agency. Ferroalloy Manufacturing Point Source Category. In: Federal Register, Environmental Protection Agency, Washington, D.C. Vol. 38, No. 201 (Part II).

5. Kirk-Othmer. Encyclopedia of Chemical Technology, New York, John Wiley & Sons, Inc., 1966.

6. Fields, J. Processing and Handling of Ferroalloys. Journal of Metals. 357-360, March 1966.

7. Leeper, R.A. and T.J. Dyerdek. Smelting of High Carbon Ferrochromium in a Three Phase Electric Furnace. Journal of Metals. 353-356, March 1966.

8. Sansom, R.L. Development Document for Proposed Effluent Limitations, Guidelines and New Source Performance Standards for the Smelter and Slag Processing Segment of the Ferroalloy Manufacturing Point Source Category. Environmental Protection Agency, Contract No. 440/1-73/008, August 1973.

4.0 COPPER INDUSTRY

4.1 INDUSTRY BACKGROUND[1]

The United States is the world's leading copper producer. Domestic mine production in 1971 was 1.52 million (copper content) short tons. In addition to this, approximately 181,000 short tons of copper was imported, and 187,700 short tons of refined copper was exported. The electrical equipment industry is the major U.S. consumer of copper, accounting for approximately half of the total domestic consumption; other major users are construction operations (16 percent), industrial machinery (12 percent), transportation (8 percent), and ordnance (6 percent).

Domestic demand for primary refined copper in the year 2000 is estimated to be 4.9 to 7.86 million short tons;[2] by comparison, the 1971 consumption was 1.59 million short tons of refined copper.

Ninety percent of the United States copper is mined in five western states - Arizona, Montana, Nevada, New Mexico, and Utah. The remainder is obtained from Idaho, Michigan and Tennessee. Some large United States copper producers are also operating in Canada, Mexico, Chile, Peru, the Republic of South Africa, and Zambia.

The major copper companies operate mining, smelting, refining,

and fabricating facilities, and also operate their own marketing organizations. Smaller companies mine and concentrate the ore and ship the product to major companies or to companies having only smelting and refining facilities. In 1968, approximately 45 percent of the ore was produced by five leading mines and approximately 85 percent of the Nation's total smelting capacity was controlled by four companies. Most of the ore is treated in concentrators near the mines. In 1971, there were 19 U.S. smelters: eight in Arizona, three in Michigan, and one each in Utah, Montana, Nevada, New Mexico, Tennessee, Texas, New Jersey, and Washington.

Table D-1 of Appendix D provides pertinent statistics on copper mining operations.

Recently Outokumpu Oy of Finland developed a "flash smelting" process which provides an atmosphere surrounding the copper smelter totally free of sulfur dioxide emissions. The Lummus Company of New Jersey is providing the design, engineering and construction for plants utilizing the process.

4.2 RAW MATERIALS

Many copper-bearing minerals are widely distributed throughout the various ore deposits. Table 4.1 lists the major types of ore and the minerals found in each ore.

Of all these copper-bearing ores. only chalcocite, chalcopyrite, bornite, chrysocolla, azurite, and malachite are commercially important. Copper ores occur in many types of deposits in various rocks. About 90 percent of the U.S. copper ore

Table 4.1 MAJOR COPPER-BEARING ORES[3]

Type of ore	Mineralogical name	Form of copper
Sulfide:	Bornite	Cu_5FeS_4
	Chalcopyrite	$CuFeS_2$
	Enargite	$Cu_3(As,Sb)S_4$
	Tetrahedrite	$Cu_{12}Sb_4S_{13}$
	Tennantite	$Cu_{12}As_4S_{13}$
	Calcocite	Cu_2S
	Covellite	CuS
	Complex famatinite	$Cu_3(Sb,As)S_4$
	Bournonite	$PbCuSbS_3$
Oxide:	Cuprite	Cu_2O
	Tenorite	CuO
	Malachite	$CuCO_3Cu(OH)_2$
	Azurite	$2CuCO_3Cu(OH)_2$
	Amtlerite	$Cu_3SO_4(OH)_4$
	Brochantite	$Cu_4SO_4(OH)_6$
	Atacamite	$Cu_2Cl(OH)_3$
	Chrysocolla	$CuSiO_3:2H_2O$

occurs in porphyry copper deposits.

Though different copper ores have different compositions, they contain many of the same elements. Table 4.2 gives a typical analysis of copper ore.

4.3 PRODUCTS

Ninety-eight percent of the copper is produced from ores mined primarily for copper; the remainder is produced from ores mined principally for other metals. In addition to copper, significant quantities of gold, silver, molybdenum, nickel, selenium, tellurium, arsenic, rhenium, iron, lead, zinc, sulfur, and platinum-group metals are recovered as by-products. Table 4.3 shows the coproduct and by-product relationships of copper with other metals.

4.4 PROCESS DESCRIPTION

Figure 4.1 illustrates the copper industry segment. The operations are mining, concentration, smelting and electrowinning, electrolytic refining, and fabrication.

The ores are smelted down either as they come from the mine or after they are subjected to a refining process of grinding and flotation, which transforms low-percentage-copper ore into high-percentage-copper concentrate. In some cases, the concentrate is partially roasted before smelting to remove part of the sulfur and produce a favorable balance of copper, iron, and sulfur for feed to the reverberatory furnaces. In the reverberatory furnace, iron oxide combines with a siliceous flux to form a slag, leaving a material known as matte, which

Table 4.2 TYPICAL ANALYSIS OF COPPER ORE USED AT WHITE PINE COPPER COMPANY, MICHIGAN[4]

Element	Percentage
Cu	1.0
Ag	0.25 oz./ton
Au	Trace
Al_2O_3	15.0
SiO_2	61.5
CaO	7.4
Fe	6.6
MgO	3.7
Ni	0.005
S	0.35
Pb	0.001
As	0.0005
Mo	0.002
Bi	0.0001
Mn	0.05
Zn	0.001
Na	1.5
K	1.0
Co	0.003
Se	0.0005

Table 4.3 COPRODUCT AND BY-PRODUCT RELATIONSHIPS OF COPPER WITH OTHER METALS[1]

Source	Product	Unit	Quantity	Total output, percent
Copper	Arsenic	1,000 short tons	3	100.0
Do	Rhenium	Pounds	2,400	100.0
Do	Selenium	1,000 pounds	W	100.0
Do	Tellurium	do	W	W
Do	Platinum	1,000 ounces	5	45.9
Do	Silver	do	9,551	29.2
Do	Gold	do	406	27.5
Do	Molybdenum	1,000 pounds	23,777	25.5
Do	Nickel	do	4,060	13.4
Do	Sulfur	1,000 long tons	529	5.4
Do	Zinc	1,000 short tons	9	1.8
Do	Iron	do	379	.7
Do	Lead	Short tons	48	
Do	Copper	1,000 short tons	1,182	98.1
Lead	do	do	8	.7
Zinc	do	do	5	.4
Tin	do	do	W	W
Silver	do	do	3	.2
Tungsten	do	do	W	W
Gold	do	do	W	W
Uranium	do	Short tons	W	W

W Withheld to avoid disclosing individual company confidential data.

contains copper, iron, and some sulfur. The matte is reduced to copper in a converter. This crude copper, called blister copper, undergoes further purification by fire refining to reduce the sulfur and oxygen contents. The refined blister copper may then be cast into anodes for electrolytic refining.

These processes and the emissions they produce are further described in the following sections. Extraordinary energy requirements are also noted.

4.4.1 Mining and Concentration

(1*) Mining - Open-pit and underground methods are used in mining various types of copper deposits. Open-pit mining accounts for nearly 85 percent of the copper ore mined in the United States. The basic operations are drilling, blasting, loading, and hauling.

Large amounts of fugitive dust are evolved from the mining of ore. In 1968, about 490 million tons of waste material was discarded in the mining of 170 million tons of copper. The dust consists of all the materials present in the ore. The copper content of the discarded sulfide ore material varies from zero to the copper content of the ore grade.[1] Water pollution is not a problem, since open-pit mining is a dry operation.

Vast areas of land are used for disposal of copper mining tailings. Typically the copper mine tailings contain no organic matter and no nitrogen. Tailings and their constituents are discussed more fully in the following section concerning concentration (2).

* Numbers refer to corresponding processes in Figure 4.1.

The ore is loaded into rail cars or trucks by electric shovels. It is transported to concentrators by standard gauge railroads, trucks, skipways, and conveyor belts.[1] Rail haulage, hoisting facilities, and shuttle cars are used in large underground mines.

Several copper deposits are now being worked by in-place leaching. The deposits are first cut by a system of tunnels, fractured by explosive or hydraulic methods, then leached by sulfuric acid introduced through pipes to the upper part of the deposit. The copper-rich fluids are withdrawn from the lowest levels of mine workings and pumped to the surface, where the copper is removed electrolytically or by cementation. The main disadvantages of the method are that only 50 to 60 percent of the copper in the ore deposit can be recovered by present techniques and the more valuable by-products, i.e. gold and rhenium, are left in the rock during the leaching process.

Depending upon the sub-strata, mining operations may have significant potential for ground water contamination. Also, some particulate emissions are often associated with development of the mining site.

(2) Concentration - Copper ores are upgraded from less than 1 percent copper to approximately 15 to 30 percent copper content. Although the concentrating methods vary according to the physical properties of the ore, concentration generally involves crushing, grinding, classification, flotation, and dewatering. The collec-

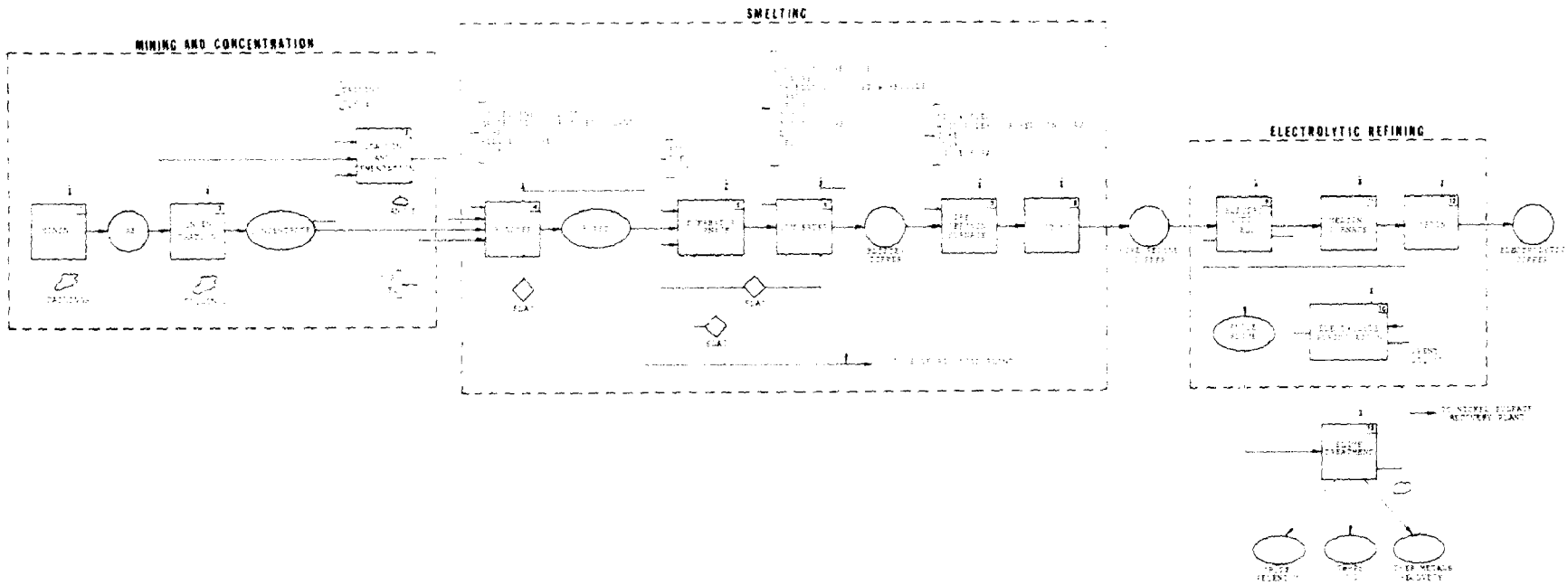

Figure 4.1. Copper industry.

tors (additives) used in flotation are determined by the other minerals present in the copper ore; they may be xanthates, dithiophosphates, or xanthate derivatives. Flotation is usually used only for sulfide ore; recently, however Earth Resources Company has reported good results from concentration of low-grade copper oxide by the flotation method.[5] Oxide ores are treated by hydrometallurgical methods by leaching and cementation. Rod-mill grinding is common. Lime and water are added during grinding to condition the mineral. Table 4.4 lists elements that may be present in copper concentrate.

Approximately 2 pounds of particulate per ton of ore processed is emitted from concentrating plants. Since much of the water used is recycled within the process, water pollution problems are minimal.

Tailings from the milling operation and the tailings and overburden from the mine are dumped at the mine site. Copper mine tailings are mildly alkaline. The minor elements in mine wastes are present in low concentrations and create no air or water pollution problems.[6]

The following tables illustrate typical composition of copper mine tailings and acid-extractable tailings' metals.

For internal operations within a concentration plant, ore cars and conveyors are used to transport materials. The concentrate is transported by conveyors, railroads, and trucks to the smelters, and is stored with fluxes to be charged to the smelter.

Table 4.4 ANALYSIS OF COPPER CONCENTRATE

Element	Composition
Cu	20-50%
Pb	11%
Zn	9%
Ag	40 oz.
Au	1 oz.
Pt etc.	tr.
As	0.25%
Sb	0.15%
Bi	0.02%
Se	0.02%
Te	0.01%
Ni	0.05%
Co	0.02%
Cd	0.01%
In	tr.
Tl	tr.
Ge	tr.
Sn	tr.
Cl	0.05%
F	0.05%
S	N.A.
Fe	N.A.
Al	N.A.
Si	N.A.
Ca	N.A.
Mg	N.A.
Mo	N.A.
Mn	N.A.

N.A. = not applicable

Table 4.5 COMPARATIVE ANALYSES OF TAILINGS, UNDISTURBED DESERT, AND OVERBURDEN AREAS, PIMA MINING CO., 1972[6]

A

Soil material	Depth of sample (cm)	Organic matter (%)	Bulk density (g/cm³)	pH	Total soluble salts (ppm)	NO_3 N	Elements (ppm) P	Na	K
Tailing	15	0.21 a	1.35 b	7.75 a	355 c	22 a	31 b	66 b	51 a
	91	0.18 a	1.31 b	7.88 a	271 c	7 a	48 a	55 b	35 a
Tailing and overburden	15	0.11 b	1.34 b	7.78 a	2869 b	7 b	26 b	189 a	25 b
	91	0.11 b	1.40 a	7.55 b	2808 b	8 a	1 b	104 a	39 a
Overburden	15	0.14 b	1.29 b	7.85 a	2452 b	7 b	2 b	135 a	15 b
	91	0.14 b	1.28 b	7.56 b	2896 b	8 a	2 b	107 a	20 b
Desert	15	0.18 a	1.37 b	7.45 b	3182 a	6 b	1 b	63 b	17 b
	91	0.13 b	1.27 b	7.44 b	5540 a	3 b	1 b	55 b	21 b
C.V. (%)		26	4	19	73	57	59	47	43
Significance of differences									
1. Between soil depths		*	ns	*	**	**	ns	**	ns
2. Between soil materials		**	*	**	**	**	**	**	**

Legend: ns = not significant at 5%; * = significant at 5%; ** = significant at 1%

Means followed by the same letter, within soil depths, are not different at the 5% level of significance (Student-Newman-Keul test)

A – [illegible] organic matter, bulk density, pH, total soluble salts, NO_3 N, [illegible] extractable Na, and extractable K in soil materials in tailing berms Pima Mining Co., 1972.

B

Soil Material	Depth of sample (cm)	Acid extractable Fe	Mg	Zn	Mn	Cu	Available Fe	Mg	Cu
		(ppm)							
Tailing	15	16215 a	7028 a	187 a	178 a	761 a	823 a	718 b	39 a
	91	14678 a	3758 c	74 b	54 b	709 a	1021 a	832 a	68 a
Tailing and overburden	15	13013 b	6016 b	110 b	116 ab	689 b	619 b	686 b	25 b
	91	11188 b	3520 c	63 bc	54 b	571 b	565 b	541 b	24 b
Overburden	15	6113 d	3131 d	67 c	145 b	22 c	15 c	438 c	4 c
	91	5828 c	2938 d	54 bc	72 b	9 c	12 c	371 c	2 c
Desert	15	7255 c	3984 c	64 c	178 a	16 c	21 c	338 c	3 c
	91	4683 d	3555 c	40 c	159 a	13 c	18 c	354 c	2 c
C.V. (%)		43	34	55	43	99	103	33	109
Significance of differences									
1. Between soil depths		**	**	**	**	**	**	*	**
2. Between soil materials		**	**	**	**	**	**	**	**

Legend: ns = not significant at 5%; * = significant at 5%; ** = significant at 1%

Means followed by the same letter, within soil depths, are not different at the 5% level of significance (Student-Newman-Keul test)

B – Average acid extractable Fe, Mg, Zn, Mn and Cu and available Fe, Mg and Cu at two depths in soil materials in tailing berms. Pima Mining Co., 1972.

(3) Hydrometallurgy (Leaching and Cementation) - Valuable metals are separated from gangue by lixiviation. This method is usually used with oxidized, mixed oxidized and sulfide ores, and native coppers. The most commonly used solvent is 5 to 10 percent sulfuric acid.[a] Ferric sulfate or ammonia solutions are also used, the latter on native copper ores of Michigan. Leaching methods include leaching in place, heap leaching, percolation leaching, and agitation leaching.

The treatment of mixed ore, containing both sulfide and oxide minerals, depends upon the relative proportions of the two types of minerals. Ores that contain equal amounts of sulfide and oxide are treated by a method combining leaching and flotation.

Increasing amounts of copper (cement copper) are produced by precipitation of copper from mine waters and leach solutions with scrap iron.

No particulate is emitted from leaching operations, but considerable water pollution is associated with this process.

4.4.2 Smelting

Smelting includes roasting, reverberatory smelting, converting, and fire refining.

(4) Roasting - Although roasting is not used in the majority of plants, it is still practiced by some operations, who use multiple-hearth roasters and fluid bed roasters, which operate autogenously. Their offgases contain up to about 15 percent SO_2.[7]

---

a) The sulfuric acid used is normally produced as a by-product from smelter flue gases.

The main purpose of roasting is desulfurization. Usually the concentrates have high sulfur content. Much of this sulfur is useless and creates air pollution problems as SO_2 in subsequent operations. The roasting not only eliminates much of the sulfur from the concentrate, but makes it possible to economically recover it as H_2SO_4. The disadvantage of roasting is an increase in the amount of copper lost in the slag.

The concentrated ore contains S, Fe, Si, Ca, Al, Mg, Zn, Cd, Mn, Co, Ni, As, Sb, Bi, Pb, Se, Tl, Te, Au, Ag, Pt, and Pd. It is heated in the presence of air with the addition of fluxes, and the sulfur in the ore is oxidized and partially eliminated to produce a "roast" with suitable composition for further smelting.

The temperature of the roast ranges from 400°F at the lowest hearth levels. External heat is provided by gas or oil firing. The roaster product "calcine" is passed to reverberatory furnaces.

Effluent gases from the roasters contain SO_2, which may be used as a feed to a sulfuric acid plant. The collected fumes from the roaster are heated to separate a residue containing Pb and Sb from crude material containing As_2O_3. The residue is transferred to a lead smelting unit. Table 4.6 gives typical input and output data for a roaster. Table 4.7 identifies the major elements in the feed to a typical copper roaster and the disposition of these elements.

The roasting operation generates about 170 pounds of particulate per ton of copper. Total annual particulate emissions in the U.S. from all roasting processes is estimated to be

Table 4.6 TYPICAL INPUT AND OUTPUT TO A COPPER ROASTER (TONS PER DAY)[8]

	Charge concentrate	Flux	Calcine	Roaster gas
Cu	200		200	
Fe	300		300	
S	350		175	
SiO	100	90	190	
CaO		35	35	
Other	80	40	120	
H_2O	100			100
Air	830			
SO_2				350
N_2				655

Table 4.7 DISTRIBUTION OF ELEMENTS IN FEED TO A COPPER ROASTER

Element	Charge composition, %	Amount into roasted product, %	Amount into dust collector catch,* %	Unaccounted, %
Cu	25	99	-	-
As	0.25	20-50	50-80	0-1
Sb	0.15	40-60	40-60	0-1
Bi	0.02	60-80	20-40	0-1
Pb	11	25-50	50-75	0-1
Zn	1	60-75	25-40	0-1
Cd	0.01	60-75	25-40	0-1
Se	0.02	50-75	25-50	0-5
Te	0.01	75-90	10-25	0-2

*Note: Collected fume circulates or goes to arsenic recovery.

7000 tons.[9] The volumetric flow rate of exhaust gases varies considerably with plant capacity and design.

The composition of the particulates is dependent on the ore type. Common constituents are arsenic, antimony, mercury and lead, which except for mercury appear as oxides in the roaster effluent. The uncontrolled emission rate for SO_2 from the roaster is 60 pounds per ton of copper produced. An SO_2 reduction in excess of 90 percent can be obtained by using a combination of sulfuric acid plants and lime slurry scrubbing.[10] About 1 to 3 percent of the SO_2 is converted to SO_3.[11] The SO_3 may combine with water vapor at temperatures below 400°F to form sulfuric acid mist.

Table 4.8 lists the contaminants of the gas stream from a typical roaster.

Table 4.8 CONTAMINANTS OF GAS STREAM FROM ROASTER[11]

	Solid content, grams	gr/DSCF
Chlorides as Cl	0.055	0.071
Fluorides as F	0.011	0.014
Arsenic as As_2O_3	0.087	0.11
Lead as Pb	0.087	0.11
Mercury as Hg	0.0011	0.014
Selenium as Se	0.044	0.056
Total Solids	0.44	0.56
SO_2 content, vol.% of oxygen	7	9

Volumetric flow rate of exhaust gases vary considerably with plant capacity. A typical gas flow rate is 16,000 SCFM. The furnace gases are cooled by dilution air. Average temperature of the gases is approximately 1200°F.[12]

(5) Reverberatory smelting - The roast charge or the wet concentrate (if roasting is not practiced) and limestone flux are transported from bins by a conveyor belt system and fed to the reverberatory furnace through a hopper.[3] This process produces a slag and copper matte containing 15 to 50 percent copper. The liquid matte is formed at about 1800°F.[13] Table 4.9 lists the approximate distribution of elements into the matte, slag, and fume.

About three fourths of the U.S. plants use natural gas to provide the required heat input; most of the remainder use pulverized coal.

Table 4.9 DISTRIBUTION OF ELEMENTS IN REVERBERATORY FURNACE FEED

Element	Charge composition, %	Amount into matte, %	Amount into slag, %	Amount into dust collector catch,* %
Cu	15-50	99.0	N.A.	N.A.
As	0.13	80-90	10-20	0-10
Sb	0.09	85-90	10-15	0-6
Bi	0.02	90-95	5-10	0-1
Pb	5	75-90	10-25	0-10
Zn	0.75	10-25	75-90	0-25
Cd	0-01	5-15	65-80	0-25
Se	0.02	95-100	0-5	nil
Te	0.01	95-100	0-5	nil

If a particulate control device is used on the reverberatory furnace, the flue dust is usually circulated back to the charge. The slag is usually sent to a waste dump; it contains Fe, Ca, Si, Al, Mg, Mn, Co, Zn, Sb, Cu, Ag, and Pb.

About 206 pounds of particulate is emitted per ton of copper. In 1969, annual particulate emissions from this process in the U.S. totaled 28,000 tons.[9] Significant quantities of potentially hazardous materials, as identified in Table 4.9, may be emitted if suitable emission control devices are not used. Furnace gases contain 1 to 2 percent SO_2 and 13 percent CO_2. The volumetric flow rate of the exit gases averages 50,000 SCFM, and the temperature is 700°F.[7] Table 4.10 presents typical compositions of the exit gases from reverberatory furnaces. Because of the low SO_2 concentration found, it is not economical to make H_2SO_4 from reverberatory gases.

Table 4.10 COMPOSITION OF REVERBERATORY FURNACE EXHAUST GASES[3]

	Volume %	
	Minimum	Maximum
O_2	5	6
N_2	72	76
CO_2	10	17
H_2O	4	10
CO	0	0.2
SO_2	1	2

[illegible] <u>[illegible]erters</u> - The molten matte from the reverberatory smelter [illegible] charged to the converter. Recycled material from zinc plants,

soda-ash, recycled dust, scrap, siliceous ore, and flue dusts are also added. A charge consists of 163 tons of 35 to 40 percent copper matte, 40 to 50 tons siliceous flux, and 40 to 50 tons of cold copper-bearing material, such as scrap and matte.[3]

Air is forced through tuyeres into the molten matte to produce blister copper. Most of the iron present in the matte is oxidized and slagged with silica flux, which is then recycled to the reverberatory furnace. Converter temperatures are maintained at approximately 2200°F. Table 4.11 identifies the elements found in the charge to the converter. The converter requires no external source of heat; requirements are satisfied by heat of reaction in the converter.

Table 4.11 DISTRIBUTION OF ELEMENTS IN CHARGE TO THE CONVERTER

Element	Charge composition, %	Input into blister, %	Input into dust composition, catch, %	Input unaccounted, %
Cu	40	Bulk	-	-
As	0.2	40-60	40-60	0-10
Sb	0.12	50-70	30-50	0-10
Bi	0.03	70-80	20-30	0-10
Pb	4.5	5-10	90-95	0-10
Zn	0.3	nil	90-100	0-10
Cd	0.01	nil	90-100	0-10
Se	0.04	90-100	0-10	nil
Te	0.02	90-100	0-10	nil

The effluent gases are rich in sulfur dioxide and may be sent to a sulfuric acid plant for recovery. The exhaust streams contain lead, antimony, arsenic, bismuth, selenium, tellurium, zinc, cadmium, and thallium. The collected dust is shipped to a lead smelter for recovery of lead, antimony, bismuth, and thallium. Significant quantities of hazardous materials can be emitted if high efficiency particulate control devices are not used.

The converters emit about 240 pounds of particulate per ton of copper produced; annual particulate emissions from the process in the U.S. total 32,000 tons.

Since the slag is recycled to the reverberatory furnace, no solid or liquid wastes are generated.

The gases are emitted at a rate of 16,000 SCFM.

The molten matte is brought in ladles from reverberatory furnaces by a crane and charged to the converter through a hood. The flux is stored in a bin, from which it is conveyed to the converter.

The blister copper is moved for refining by short haul methods, such as rail or crane and ladle when the refinery is very near or an integral part of the smelters.[13]

(7) Fire-refining furnace - Blister copper from the converters is fire-refined to remove impurities and to adjust the sulfur and oxygen contents to levels suitable for casting. Furnaces in common use are of the reverberatory or the tilting cylindrical type. The fire-refined copper may be cast into anodes for elec-

trolytic purification; demand for electrolytically refined copper is increasing at the expense of demand for fire-refined copper. About 5 percent of the world's copper is supplied as fire-refined copper.

The fire-refining process consists of melting, blowing and poling. The blister is first melted by a hot air stream prior to blowing. Fluxes are then added. During this process sulfur and volatile impurities are evolved as oxidation takes place. In addition, the volatile metals such as cadmium and zinc are removed into slag during blowing. Oxides of iron, arsenic, lead, copper, and other substances are skimmed as slag and sent back to copper smelters. The oxygen content is reduced by forcing wood logs below the molten metal surface (poling). Table 4.12 lists the disposition of elements in the feed to the refining furnace. Particulate emissions are minimal.

The molten copper is transferred to the furnace from the converter by ladle.

Table 4.12 DISPOSITION OF ELEMENTS IN FEED TO REFINING FURNACE

Element	Charge composition, %	Input into refined, copper %	Input into refined, products %	Input into slag, %	Amount unaccounted, %
Cu	98	99.6	-	-	-
As	0.06	nil	nil	90-100	0-10
Sb	0.03	nil	nil	90-100	0-10
Bi	0.04	nil	nil	90-100	0-10
Pb	0.5	nil	nil	90-100	0-10
Zn	nil	nil	nil	90-100	nil
Cd	nil	nil	nil	90-100	nil
Se	0.1	nil	85-95	5-15	0-15
Te	0.05	nil	90-100	0-10	0-10

(8) Casting - The casting operation for fire-refined copper is comparable to that for electrolytic copper. The casting of anodes from an anode furnace is performed on a casting wheel. Copper is poured from a furnace into a ladle. The mold temperature is regulated by water sprays. The cast anodes are cooled and then sent to the electrolytic refinery. Casting the copper may cause some air pollution.

4.4.3 Electrolytic Refining

(9) Electrolytic cell - In the electrolytic cell, the copper from the impure anode is dissolved electrolytically and migrates to the cathode, where it is deposited. The impurities in the anode copper either dissolve in the electrolyte, which is a solution containing copper sulfate and sulfuric acid, or fall into the slime.

Electrolytic cells require approximately 200 KWH per ton of cathodes produced. Natural gas or fuel oil is also required to fire the melting furnace used to produce anodes.

Table 4.13 presents a typical analysis of the anodes, electrolyte, refined copper, and slime.

Table 4.13 GENERAL RANGE ANAYLSIS OF ANODE, ELECTROLYTE, REFINED COPPER, AND ANODE SLIME[3]

Constituent	Anode, %	Electrolyte, g/l	Refined copper, %	Raw slime, % (dry basis)
sulfuric acid		170-230		
copper	99.0-99.6	45-50	99-95	20-40
oxygen	0.1-0.3		0.03-0.05	
sulfur	0.003-0.01		0.001-0.002	2-6
arsenic	0.003-0.2	0.5-12	0.0001-0.001	0.5-4.0
antimony	0.001-0.1	0.2-0.7	0.0002-0.001	0.5-5.0
bismuth	0.001-0.01	0.1-0.5	0.00001-0.0002	
lead	0.01-0.2		0.0002-0.0010	2.0-15.0
nickel	0.01-0.2	2.0-20.0	0.0001-0.002	0.1-2.0
selenium	0.01-0.06		0.0003-0.001	1.0-20.0
tellurium	0.001-0.02		0.0001-0.0009	0.5-8.0
gold	0.1-3.0[b]		0.002-0.01[b]	50-300[b]
silver	2-90[b]		0.05-0.5[b]	1000-8000[b]

[a] Extremes omitted.
[b] Troy ounces (31.103 g) per ton (2000 lb).

Atmospheric emissions from the cells should be relatively minor, although trace amounts of some elements may be emitted. Proper operation of the cell should cause little pollution, since the cell slime is sent to the precious-metal recovery plant and the spent electrolyte is sent to the electrolyte purification plant.

(10) Electrolyte purification - The electrolyte is purified by electrolysis to control the concentrations of copper and soluble impurities. Copper from the solution is deposited on the cathode and the electrolyte solution (containing sulfates of As, Sb, Bi, Ni, and Cu) is transferred to open or direct-fired evaporators, where it is further concentrated to produce nickel sulfate. The black liquor from the evaporators is either discarded or used in leaching operations. Some plants are using dialyzers to separate the sulfuric acid from impurities, which is recylced for electrolyte make-up.

Volatile constituents such as arsine (AsH_3) may be liberated from the cells. The direct-fired evaporator could also be a source of potentially hazardous emissions. Black liquor from the evaporators can be a source of water pollution.

Slimes containing Ag, Au, Pt, Pd, Se, Te, As, Sb, Bi, Pu and Cu are sent to treatment plants.

(11) Melting furnace - The cathode copper contains sulfur in the form of sulfates. The normal range of the cathode sulfur analysis is 0.001 to 0.002 percent. Copper melting is accomplished in reverberatory arc and induction furnaces.

Since the melt copper is continuously casted, there should be no significant emissions.

Mechanical cranes are used for charging purposes. About 250 to 300 KW of power is required to maintain the molten bath in the arc furnaces of 50 to 80 tons capacity. The molten copper from the furnace flows into a ladle that has multiple pouring spouts for subsequent casting.

(12) Casting - Among a variety of possible casting operations, continuous casting has become very popular. The molten copper is fed into a mold and discharges continuously in its final shape. The pour temperature is controlled at about 2050°F. The flow of the precisely formed cast is maintained over pinchrolls, on which cast cakes are cut by traveling cut-off saws. The cast cakes are marketable at this point.

(13) Slime treatment - The insoluble metals and compounds that settle to the bottom of the tanks during the electrolytic cycle are screened and pumped to a slime-treatment plant for recovery of precious metals and by-products. There are many recovery processes for slime treatment. From raw slimes, selenium is recovered and sent to selenium plants for recovery. Tellurium is also recovered.

4.4.4 Electrowinning Method

In principle, the electrowinning method is the same as the electrolysis process, except that the electrowinning method bypasses the smelting operation and treats the copper concentrate. Electrowinning is an alternative method of producing finished copper from copper concentrate solution or copper leach solu-

tion. Although electrowinning has been limited to treatment of oxidized minerals, recent attempts were made to treat sulfide ores by this method. The attempts were successful economically but not technically. Anaconda Aluminum Company in Montana and Duva[18] Company in Arizona are engaged in hydrometallurgically processing sulfide ores on pilot plant scale and each has started construction of a full scale plant.

4.5 MAJOR POLLUTANT SOURCES

The converter, reverberatory furnace and ore crushing operations are the most significant sources of emissions in the copper industry.

° Copper converter - About 240 pounds of particulate and 3500 pounds of sulfur dioxide are emitted per ton of copper produced. It is estimated that approximately 32,000 tons per year of particulates are emitted. This annual emission rate from converters represents 13 percent of the total emissions from the copper industry. The converter operates at an elevated temperature of approximately 2200°F. Fumes from the converter contain lead, antimony, arsenic, bismuth, selenium, tellurium, zinc, cadmium, and thallium. Slag from the converter contains iron, silica and copper as well as varying quantities of potentially hazardous materials.

° Reverberatory furnace - The emission factor for reverberatory furnaces is 206 pounds of particulate per ton of copper. Table 4.10 shows the elements that are present in the particulate emissions and their amounts. Exit gases contain 1 to 2 percent SO_2 and 13 percent CO_2. The gases are released at a temperature

of 700°F and at a rate of 50,000 SCFM. Slag formed from the furnace also contains various amounts of the elements shown in Table 4.10.

° Ore crushing - Approximately 2 pounds of particulate are emitted per ton of ore processed. In 1969 crushing operations had only limited controls and nearly 170,000 tons of particulates per year were emitted from copper ore crushing operations in the United States. In addition, there are some dust problems from material handling. Composition of the dust emitted is the same as that of the ore handled. Elements present in the ore (as shown in Table 4.2) include silver, lead, arsenic and selenium.

REFERENCES FOR CHAPTER 4

1. Schroeder, H. J. and John W. Cole. Copper, In: Minerals Year Book. Vol I - II. Bureau of Mines. 1971.

2. Ageton, R. W. and G. N. Greenspoon. Copper, In: Bureau of Mines Bulletin 650, Mineral Facts and Problems, 1970 Edition.

3. Kirk-Othmer. Encyclopedia of Chemical Technology. New York, John Wiley and Sons, Inc. 1966.

4. Private communication. White Pine Copper Company. White Pine, Michigan.

5. Ealy, G. K. Concentration of Copper Oxides by Flotation at Nicimiento. Mining Congress Journal. March 1973.

6. Ludeke, K. L. Soil Properties of Materials in Copper Mine Tailing Dikes. Mining Congress Journal, August 1973.

7. Semarau, K. T. Control of Sulfur Oxide Emissions from Primary Copper, Lead and Zinc Smelters - A critical review. Journal of Air Pollution Control Association. April 1971. Vol. 21, No. 4.

8. MacAskill, D. Fluid Bed Roasting: A Possible Cure for Copper Smelter Emissions. Engineering and Mining Journal. July 1973.

9. Vandegrift, A. E. and Others. Particulate Air Pollution in the United States. Journal of the Air Pollution Control Association, Vol. 21, No. 6. June 1971.

10. Compilation of Air Pollutant Emission Factors. Prepared for EPA. Contract No. CPA-22-69-119.

11. Donovan, J. R. and P. J. Stuber. Sulfuric Acid Production From Ore Roaster Gases. Journal of Metals. November 1967.

12. Exhaust Gases from Combustion and Industrial Processes, Engineering Science, Inc., Washington, D.C. October 2, 1971. Distributed by National Technical Information Center.

13. Industrial Gas Cleaning Institute, Inc. Air Pollution Control Technology and Costs: Nine Selected Areas. Prepared for EPA. September 1972. Contract No. 68-02-0301.

14. Phillips, A. J. The World's Most Complex Metallurgy. Transactions of the Society of AIME. Vol. 224. August 1962.

15. Flash Smelting Process for Copper Concentrates. The Mines Magazine. August, 1973.

5.0 LEAD INDUSTRY

5.1 INDUSTRY BACKGROUND

In 1971, the United States mined about 0.58 million short tons of lead, which was 15.0 percent of the world's total; we consumed 1.43 million short tons (primary and secondary metal), which was 0.38 percent of the world's consumption. In 1968, domestic primary metal represented 33 percent of apparent demand, secondary metal 38 percent, metal imports 32 percent, and stock drawdown 6 percent. Fifty percent of the total supply was consumed by the transportation industry, 18 percent by gasoline refineries and 18 percent by the construction industry. The remaining 14 percent was consumed for such other uses as ammunition, communication, and home maintenance.

The United States demand for lead in the year 2000 is expected to be from 2.52 to 4.14 million tons. Table E-1 in Appendix E lists the lead producing mines in the United States and Table E-2 presents mine production of recoverable lead in the United States by state.

Missouri, the leading lead-producing state, accounted for about 74 percent (429,600 short tons) of the domestically mined lead in 1971. Other significant lead-producing states are Idaho, Utah, and Colorado. These three states produced about 23 percent of the total U.S. lead in 1971. The lead ore imports were primarily from Canada,

Peru, Australia, and the Honduras. Secondary lead production provides a significant amount of the domestic supply.

Ore output from the mines varies widely from a few tons per day to over 10,000 tons per day. Generally, deposits in the western states contain higher grade ore and are more costly to mine and process than the deposits in Missouri.

The lead mines are located in remote areas populated mainly by people who depend upon the mines for employment. There were 120 domestic mines operating in 1969.

The toxicity of lead to humans seriously limits the marketing of lead and lead products, especially in urban areas. Another limitation is the dependence of domestic smelters on foreign lead ore sources.

5.2 RAW MATERIALS

The primary domestic lead ore is derived from the sulfide mineral [illegible] a. Table 5.1 lists the lead-bearing minerals by name and composition. These minerals are briefly described below:

Table 5.1 LEAD MINERALS, BY NAME, COMPOSITION

Mineral	Composition	Lead, %
Galena	PbS	86.6
Anglesite	$PbSO_4$	68.3
Cerussite	$PbCO_3$	77.5
Pyromorphite	$Pb_5Cl(PO_4)_3$	76.3
Vanadinite	$Pb_5Cl(VO_4)_3$	73.0
Crocoite	$PbCrO_4$	63.9
Wulfenite	$PbMoO_4$	56.4
Linarite	$PbO \cdot CuO \cdot SO_3 \; H_2O$	

Anglesite: A brittle, lustrous lead sulfate. Its opacity varies from transparent to opaque.

Cerussite: Lead carbonate. Its color varies from white to grayish adamantine.

Crocoite: An orange mineral consisting of lead chromate $PbCro_4$.

Galena: A lead sulfide, PbS, the most common ore of lead, containing 86.6 percent lead. It usually contains silver; when the percentage of silver exceeds that of lead, it becomes silver ore. The metallic minerals most commonly associated with galena include pyrite (FeS_2), sphalerite (AnS), chalcopyrite ($CuFeS_2$), tetrahedrite ($3Cu_2S \cdot Sb_2S_3$), bournonite ($3PbS \cdot Cu_2S \cdot Sb_2S_3$) and other sulfosalts. Gangue minerals associated with galena include quartz, calcite, dolomite and other carbonates, barite, and fluorite.

Linarite: A natural hydrous sulfate of lead and copper found in the oxide zone of metalliferrous lodes.

Pyromorphite: A green lead ore, member of the apatite group. Found in oxidized zones of lead deposits. Some specimens of pyromorphite have been reported to contain uranium.

Vanadinite: A natural chlorovanadate of lead. Found in New Mexico, Arizona, Africa, Scotland, and USSR.

Wulfenite: A mineral sometimes associated with calcium, chromium, and vanadium. Found in veins with ores of lead in Massachusetts, New York, Pennsylvania, Nevada, Utah, New Mexico, and Arizona.

Characteristics of the ores of some states are described briefly below.

Idaho (Coeur D'Alene District, Idaho) - Chief ore constituents are galena, sphalerite, tetrahedrite, and pyrite. Quartz, siderite, calcite, colomite, and barite are the common non-metallic gangue minerals. Grade and composition of the ore varies greatly in different parts of the district. One ore carries 2 to 10 percent lead, 2 to 10 percent zinc, a trace to 0.6 percent copper, and 1 to 30 ounces of silver per ton. An estimated average grade of the district is 4.7 percent lead, 3.8 percent zinc, 0.2 percent copper, and 7.5 ounces of silver per ton.

Utah Region - Following are the lead-producing districts: 1) West Mountain (Bingham) district in Salt Lake County, 2) Park City district in Summit County, 3) Ophir district in

Tooele County, 4) Tintic district in Juab and Utah Counties, 5) Blue Ledge district in Wasatch County. Ore occurs in fissure veins, breccia pipes, and replacement bodies mainly in limestone beds. Chief ore minerals are galena and sphalerite, with small quantities of tetrahedrite and chalcopyrite. Gold, silver, and bismuth are supporting by-product constituents. Estimated average grade of ore in the region is 8 percent lead, 5.5 percent zinc, 0.4 percent copper, 3 to 7 ounces of silver, and a trace to several tenths of an ounce of gold per ton.

Montana - Copper is the major mining product. Lead may be considered a by-product of the zinc, occurring in a ratio of about 1 part lead to 5 parts zinc on the district average.

Metaline District, Washington - A typical district ore grade is roughly 1.5 percent lead, 3 percent zinc, traces to 0.1 percent copper, and trace to 0.5 ounce of silver per ton.

Colorado Districts - The bulk of Colorado output comes from two regions: 1) parts of Lake and Eagle Counties, and 2) a region in the mountains of southwestern Colorado in San Juan.

Practically all the lead-bearing ores of Colorado are complex mineral mixtures of copper, lead, zinc, iron, gold, silver, and other elements; the ores are of widely varying grades. An estimate of typical ore grade of the Leadville region is approximately 9 percent zinc, 1.5 percent lead, 1.5 ounces of silver per ton, and small but recoverable quantities of [illegible] copper. An estimated average grade of ore in current operating mines in southwestern Colorado is 3 percent zinc, 3 percent lead, 0.7 percent copper, 2 or 3 ounces of silver, and trace to 0.1 ounce gold per ton.

Arizona and New Mexico Districts - Types range from typical fissure veins and limestone replacement bodies to contact metamorphic deposits. Almost all deposits contain gold, silver, copper, lead, and zinc. A typical assay of ore from the larger, more constantly producing areas would approximate 7 percent zinc, 3 percent Pb, 0.6 percent Cu, one to several ounces of silver, and trace to 0.1 ounce of gold per ton.

Nevada Districts - The most stable and productive mines are in Eureka, Lincoln, and Elko Counties. Types of ore deposits are various, but nearly all are small, irregular and high grade. Lead is often the least important of the valued ore constituents.

California Districts - The Darion Ingo County deposits are the major lead sources in California. These deposits are principally veins and limestone replacement bodies containing lead and zinc sulfides. Oxidized ores also are reported.

5.3 PRODUCTS

In addition to the various grades of lead produced, several coproducts and by-products are recovered. Copper, gold, silver, and zinc are the major coproducts or by-products associated with lead ores; minor by-products are antimony, bismuth, sulfur, and tellurium. Concentrator tailings in Missouri are used as highway and railroad ballast, dolomite limestone for agriculture, and smelter slags as construction materials. Table 5.2 shows the co-product and by-product relationships of lead and other metals.

Table 5.2 COPRODUCT AND BY-PRODUCT RELATIONSHIPS OF LEAD AND OTHER METALS[1]

Source	Product	Unit	Quantity	Total output, percent
Lead	Bismuth	1,000 pounds	700	100.0
Do	Antimony	Short tons	1,019	54.3
Do	Tellurium	1,000 pounds	36	29.7
Do	Silver	1,000 ounces	5,573	17.0
Do	Zinc	1,000 short tons	57	10.7
Do	Gold	1,000 ounces	75	5.1
Do	Copper	1,000 short tons	8	.7
Do	Stone	do	W	
Do	Sulfur	1,000 long tons	W	
Do	Lead	1,000 short tons	283	78.8
Zinc	do	do	69	19.2
Silver	do	do	6	1.6
Fluorine	do	do	1	.4
Copper	do	Short tons	48	
Gold	do	do	21	
Uranium	do	do	W	

W Withheld to avoid disclosing individual company confidential data.

5.4 PROCESS DESCRIPTION

Figure 5.1 illustrates the lead industry segment. The primary lead smelters in this country use essentially the same processing steps, with some differences in equipment and details of operation. The processes are mining, ore concentration, leaching, smelting, pyrometallurgical refining, electrolytic refining, and finishing.

5.4.1 Mining

(1*) Mining - Lead ores are largely mined by underground methods employing either open or supported stops. The stopping includes block caving, room and pillar with and without rock bolts, shrinkages, cut-and-fill, and timbered methods.

Very little air pollution occurs in lead mines. Large amounts of solid waste are generated and are used in highway construction operations. When the waste cannot be used, it is dewatered and impounded to minimize atmospheric pollutions.

Water contamination depends on the acidity of the water leaching through the waste pile. Mine waste water from the new Lead Belt mine in Missouri is basic (pH 7.8 to 8.2) and would precipitate heavy metals into existing settling ponds. At that mine, copper was found to be the most toxic heavy metal present.[2] The heavy metals in the tailings discharge were not toxic enough to endanger fish life. At one mine in Missouri approximately 3500 to 5500 gpm of water is pumped for mining operations.[2]

The ore is disintegrated by lightweight percussive and rotary percussive drilling machines. Power shovels, scrapers, and mucking machines are used for loading. Transportation is by electric or diesel-powered motorized trains operating on heavy-gage tracks.

5.4.2 Concentration

Mineral dressing and concentration - The mined ore is normally

---

* Numbers refer to corresponding processes in Figure 5.1.

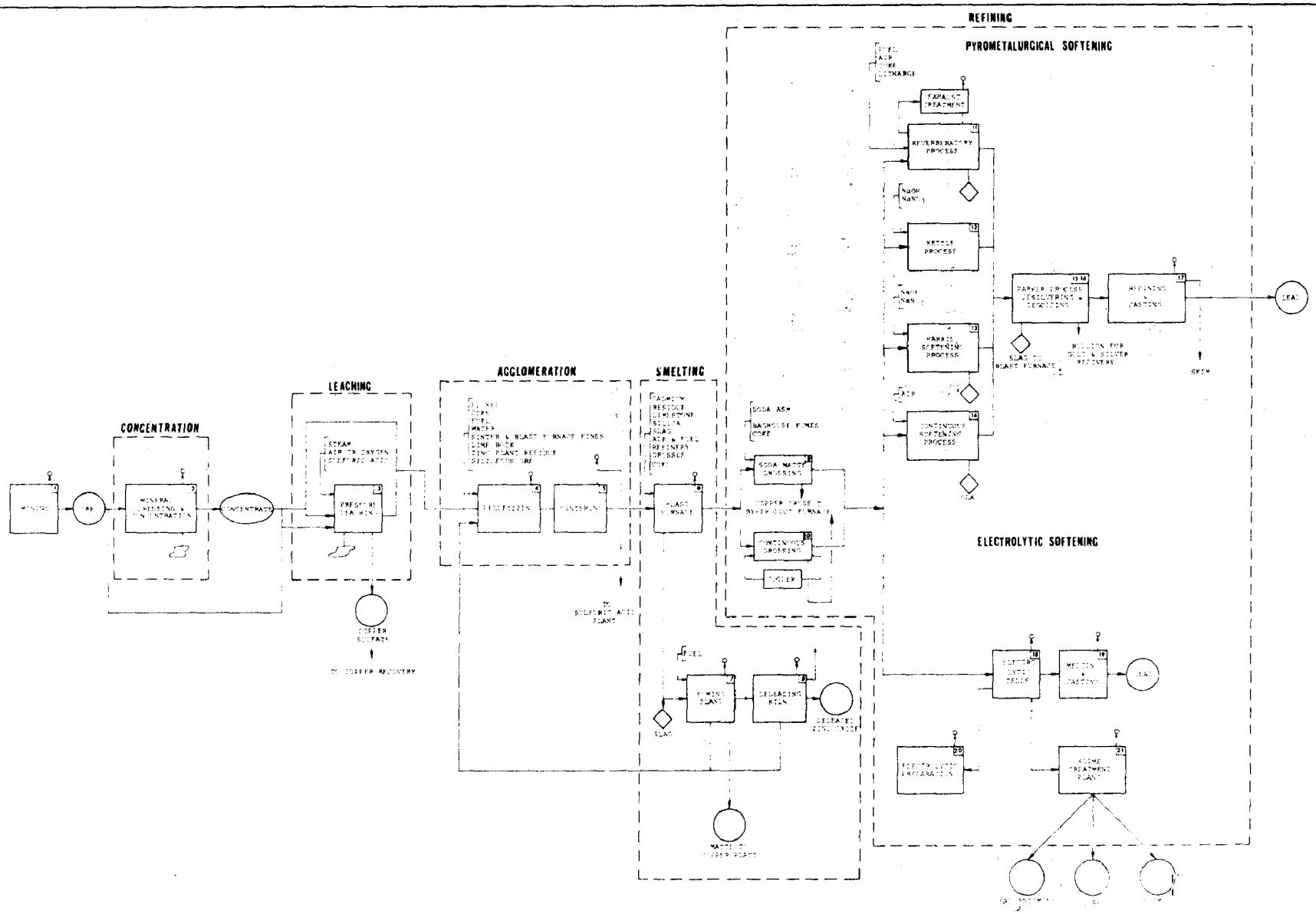

Figure 5.1. Primary lead production.

in the lead-zinc flotation process are sodium isopropyl xanthate, diethyl dithiocarbamate, mixed alcohols, zinc sulfate, sodium cyanide, copper sulphate, and sodium dichromate. Pine oil and cryslic acid are used as frothers, and sodium carbonate and calcium oxide as conditioners. The flotation process requires approximately 1500 to 2000 gpm of water.

Crushing operations generate about 2 pounds of particulate emissions per ton of concentrate produced. About 5 pounds per ton are emitted from material handling and stockpiling.[4]

Spent liquor from the flotation process and the mine waste liquor and tailings flow by gravity to settling ponds. The flotation reagents form a surface film in the ponds and contribute to stream pollution by promoting growth of bacteria and undesirable algae. Where more complete water recovery is required, the tailings may be thickened, filtered, and conveyed to a tailings pile. Disposal of the tailings at the mine site, causes no substantial solid waste problem but may cause serious water pollution.

The ore charge is run over a grizzly (coarse screen) through an ore bin to the crusher. Belt conveyors convey the crushed material to a ball mill and then to a classifier. The concentrate is transported to smelters by truck or rail. Care must be taken to prevent losses by leakage from truck bodies or railroad cars. Truck bodies are covered to prevent dust losses. Most high-grade ores are shipped in

sealed steel drums to prevent loss through leakage, dusting, or pilferage.[4]

5.4.3 Leaching

(3) Pressure leaching - To simplify subsequent smelting operations, concentrated ore, or in some cases direct-mined ore, is pressure leached to remove most of the copper and some other elements such as arsenic and antimony. The leaching is done under pressure at high temperatures. The extracted copper is recovered by precipitation.

Leaching should cause no significant atmospheric emissions, since the process is conducted under pressure in an autoclave. The waste leach solution may be a source of serious water pollution. Table 5.4 shows a typical analysis of the pressure leach-feed, the residue, and the leach solution.

Table 5.4 TYPICAL ANALYSIS OF PRESSURE LEACH-FEED, RESIDUE, AND LEACH SOLUTION

Autoclave feed, %		Autoclave residue, %		Autoclave solution, g/l	
Cd	0.15	Cd	0.02	Cd	0.85
Co	0.025	Co	0.01	Co	0.13
In	0.08	In	0.04	In	0.06
Ni	0.40	Ni	0.11	Ni	1.78
Pb	50.6	Pb	51.2	Pb	trace
Zn	8.7	Zn	1.20	Zn	49.5
Cu	6.46	Cu	0.83	Cu	47.8
As	2.2	As	2.0	As	1.36
Sb	2.0	Sb	1.8	Sb	0.15
Sn	0.07	Sn	0.06	Sn	trace
Fe	7.8	Fe	6.7	Fe	4.0
Mn	0.14	Mn	0.10		
Mg	0.15	Mg	0.10		
Ag	131.7[a]	Ag	140.1[a]	Ag	trace
Bi	0.006	Bi	0.006	Bi	0.0
S	16.4	S	9.4	S	67.6
insolubles	2.3	insolubles	3.0	H_2SO_4	44.0
Ca	0.2	Ca	0.2	Ca	0.0

[a] Value for Ag given in oz/ton.

5.4.4 Agglomeration

Ores are agglomerated to facilitate subsequent handling in the smelting process. They are first pelletized and then sintered. Sintering, also considered part of the smelting process, is discussed in Section 5.4.5.

(4) Pelletizing - Various concentrates, return sinter, crude ore, zinc plant residue, and by-products such as flue gas dusts are blended and conditioned in a mill by the addition of water and then pelletized. A typical charge contains 30 to 45 percent lead, 7 to 12 percent sulfur, 10 to 12 percent insolubles, and 6 to 10 percent lime. The pelletizer is oil- or gas-fired to maintain an exit gas temperature of 600°F.

Particulates are emitted from the pelletizer. Their composition should be essentially the same as that of the pelletized product.

The charge is conveyed to a hopper and then to a sinter machine.

5.4.5 Smelting

In the smelting operation the concentrate is first sintered (roasted) to convert the lead sulfide to lead oxide. The lead oxide is reduced in the blast furnace to metallic lead.

(5) Sintering - Sintering is a universal practice in the lead-smelting industry. The purpose of sintering is to reduce the sulfur content of the concentrate by roasting and to produce a strong, porous mass suitable for reduction in the

blast furnace. Such elements as arsenic and antimony, Cd, Hg are volatilized. The reaction takes place at a temperature of 1100°F. Sintering takes place on a moving metal belt. Combustion takes place on the belt, and once initiated does not require external heat.

The sintering process is a potentially significant source of air pollution. Substantial quantities of sulfur dioxide are emitted; in many plants this SO_2 is converted to sulfuric acid. Offgases also contain organic vapors from flotation reagents in the concentrate. The volume of gases emitted is a function of machine size and material throughput. The range is from 100 to 200 SCFM per square foot of bed area. Temperatures of the gases normally range from 250 to 600°F. Flow rate may range from 0.80 to 1.4 SCFM per lb/hr of lead production.[6]

Table 5.5 gives a typical analysis of gases from a sintering machine.

Table 5.5 ANALYIS OF SINTER MACHINE GASES (MISSOURI LEAD OPERATING COMPANY)[7]

	Range Vol., %
SO_2	4-7
O_2	4-9
CO_2	3-4
N_2	84-85
SO_3	0.05-0.2
Dust content	25 grains/scf
Temperature	400°-665°F
Moisture content	25% by vol.

Vessel sizing; for 25,000 scfm dry gas, with gas cooling system sized to maintain a water balance for the production of 66° Be acid with gas strength of 4% SO_2 at 21,000 scfm.

The dust from the sinter machine contains Pb, Sb, Zn, Cd, Ge, Se, Te, Tn, Tl, Cl, F, and As. These constituents are usually collected for subsequent recovery of antimony and other elements. Particulate emissions are approximately 500 pounds per ton of lead produced. Table 5.6 identifies the partial composition of the feed and product from a sintering machine.

Table 5.6 TYPICAL SINTERING MACHINE FEED AND PRODUCTS

Content:		Feed	Sinter
Copper	percent	2.0	2.9
Lead	do	32.0	35.5
Iron	do	9.4	9.7
Insoluble	do	4.6	10.6
Calcium oxide	do	4.5	10.3
Sulfur	do	10.6	1.4
Zinc	do	5.6	10.0
Cadmium	do	0.05	0.04
Silver	ounces per ton	30-150	30-150

The sinter is conveyed on belt conveyors to storage.

(6) Blast furnace - In the U.S., blast furnaces are used to reduce lead oxides to metallic lead. Limestone, other fluxes, and coke are mixed with the sinter and charged to the blast furnace with limited quantities of air. Some ore and lead scrap are also charged directly to the furnace. Fuel can be liquid or gaseous. The blast furnace operates at approximately 1800 to 1900°F.

Since most lead ores contain some zinc and many lead smelters treat zinc-plant residues having high lead and zinc contents, blast furnaces often produce large tonnages of zinc as well as lead.

The bullion product from the blast furnace contains Pb, Cu, Au, Ag, Sb, As, Bi, S, In, Cd, Ni, Fe, Te, and other elements.[8] Table 5.7 shows a typical blast-furnace charge, and Table 5.8 gives the analysis of typical inputs and outputs from a blast furnace.

Table 5.7 TYPICAL BLAST-FURNACE CHARGE[3]

Components	Weight, lb
Sinter	2750-3600
Coke	270-360
Cleanup products	0-200
Slag (direct)	0-500
Silica (60% SiO_2)	0-80
Limerock (52% CaO)	0-60
Cadmium residue	0-20
Refinery dross	0-75
Baghouse product	0.75

The slag, formed at the peak temperature of the furnace, contains oxides of Fe, Ca, Si, Al, Mg, and Mn. It also contains the elements Zn, Cl, F, Ge, As, Pb, Sb, Cd, Cu, and Ag in significant concentrations.[8] This slag is further treated in a fuming furnace and deleading kiln to recover additional lead and zinc oxide. All blast furnaces in the U.S. have control devices. The uncontrolled emission rate is about 250 pounds of particulate per ton of lead produced. The inlet dust loading averages 6.0 grains/scf.[9] Concentrations of trace metals in the dust exiting from the controlled exhaust stream are as follows: Cd and V 0.01-0.1 ppm; Cu 0.01-0.1 ppm; Mg 1-10 ppm; Mn, Ni, and Sn 0.01-1.0 ppm; Pb 0.1-100 ppm.[10] Composition of the entrained dust, which is friable and minute, is similar to that of the blast-furnace charge. The fumes (containing Pb, Sb, Se, Te,

Cl, F, In, Tl, Zn, Cd, and As) are sent to cadmium treatment plants.[8]

The blast-furnace exhaust gas flows depend on furnace size; generally they range from 5000 to 9000 SCFM. Varying amounts of dilution air enter the furnace exhausts. The average flow rate of exhaust gases is about 0.6 SCFM per lb/hr of product.[6] The temperature of blast-furnace gases is around 1800°F. The sulfur dioxide content of exhaust gases is low, varying considerably from 0.005 to 1.5 percent.[11] Carbon Monoxide emissions are considerable and concentrations in blast-furnace gas is generally on the order of 2% CO.

Table 5.8 TYPICAL BLAST-FURNACE MATERIALS AND PRODUCTS[3]

Sinter Analysis, %		Slag Analysis, %		Bullion Analysis,%	
Ag[a]	10-21	Ag[a]	0.05-0.15	Ag[a]	40-100
				Au[a]	0.05-0.1
Cu	0.6-1.5	Cu[b]	0.10	Cu	1.0-2.5
Pb	28-36	Pb	1.5-3.5		
S	0.75-1.6				
Fe	12-15.5	FeO	25.5-31.9	Fe	0.6-0.8
SiO_2	13.5-15.6				
CaO	9.0-10.5	CaO	14.3-17.5		
Zn	9.5-12.5	Zn	13.0-17.5		
		insol	22.6-26.5		
		MnO	2.0-4.5		
		As[b]	0.10	As	0.7-1.1
		Sb[b]	0.10	Sb	1.0-1.75
				Bi	0.01-0.03

a) Ag and Au, oz/ton.

b) Variable, depending on the furnace charge.

(7) Fuming furnace - Slag is heated in an oil- or gas-fired furnace to produce a matte, and speiss which contains As, Sb, Cu, Ag, Si, and Fe. The matte is sent to a copper smelter for further treatment. The furnace also produces slag containing Fe, Ca, Si, Al, Cu, Mg, F and Cl. This slag is usually discarded, although one plant treats it to recover copper and silver.

Substantial quantities of fumes containing Pb, Zn, Ge, Sb, Cd, Se, Cl, and F are generated by the fuming furnace. The dust from this exhaust is collected and sent to a de-leading kiln.

(8) Deleading kiln - The charge containing the collected dust from the fuming furnace and carbon is heated in a gas- or oil-fired kiln. Zinc oxide is generated and recovered for sale; it contains Ge, Pb, and Sb as impurities.

The lead oxide fumes from the kiln contain Sb, Cd, Se, Ge, Cl, and F, which are collected and recirculated to the blast furnace.

5.4.6 Refining

Although the smelted ore produced from pure ores (for example that from southeast Missouri) may require no further treatment, most of the blast-furnace lead, which is derived from more complex ores, is refined.

Refining includes drossing, softening, desilverizing, and various other elemental recovery processes.

5.4.6.1 Drossing - The primary purpose of drossing is to remove copper. In many smelters, the drossing immediately

follows the tapping of the bullion blast furnace; in other smelters, the bullion is transported to the refinery for drossing. The charge is heated in the drossing kettle, then cooled to below the freezing point of copper (700 to 900°F). Copper and many impurities that were soluble in the hot bullion rise to the surface and are skimmed off.

Drossing is done by two processes: soda matte and continuous.

(9) Soda matte process - The blast-furnace bullion is added to the drossing kettle and treated as described above. Soda ash, litharge, baghouse dust (PbO), coke, and sulfur (if the sulfur content of the dross is low) are also added. The drossed bullion is transferred to a lead refinery, the dross is smelted in a reverberatory furnace with the addition of pig iron and silica to separate the dross into speiss (20-30%), matte (10-15%), slag (2-4%), dust (3-5%), and lead bullion (50%). The speiss and matte are sent to a copper plant for recovery.

Drossing operations emit about 20 pounds of particulate per ton of lead produced. The collected fumes and the slag are recirculated to the blast furnace.

(10) Continuous drossing - Continuous drossing is used when the charge contains a high percentage of sulfur. The hot bullion is intermixed with cooled bullion and as its temperature is reduced, copper is rejected as mixed sulfide crystals, which float to the top of the bullion bath.

Atmospheric emissions are essentially the same as in the soda matte process.

5.4.6.2 Softening - The drossed lead bullion is further refined to remove As, Sb, and Sn, either pyrometallurgically or electrolytically. Pyrometallurgical softening (usually referred to as pyrometallurgical refining) entails four alternative processes: (1) the reverberatory process, (2) the kettle process, (3) the Harris process, or (4) the continuous softening process. The lead bullion from the softening furnace is desilverized with the addition of zinc to separate a dross that contains all the noble metals. This dross is retreated to recover the zinc for reuse. The residual metal is very rich in silver.

(11) (12) (13) (14)

(15) (16) Desilverizing and Degolding - The softened lead bullion contains 40 to 500 ounces of silver per ton, 1 to 2 ounces of gold, and 1 to 2 pounds of bismuth. The silver and gold may be extracted by one of three methods, known as the Parkes process, the Betts process, and the Pattinson process. In the Parkes process, which is the most commonly used, zinc is added to the hot bullion; mixtures of gold and zinc, and silver and zinc are removed. The remaining zinc is subsequently removed by vacuum distillation, chlorine dezincing, or the Harris process; vacuum distillation is most common.

(17) Refining kettles and casting - Refined lead is fed to casting kettles, in which caustic soda and nitrate are agitated into the metal. The metal is cooled to bring the impurities

to the surface for skimming off. The lead is then cast with mechanized casting machines.

Emissions from this process should be minor.

5.4.6.3 Electrolytic Softening (Betts Process) - The bullion is refined electrolytically to produce pure lead cathodes and slimes containing impurities. Process operations include electrolytic cell operation, kettle melting, and electrolyte preparation.

18) Electrolytic cells - Refining of lead is carried out in cells. Impure lead bullion is cast into anodes. A solution of lead fluosilicate ($PbSiF_6$) and free fluosilicic acid is used as the electrolyte. Cathode starting sheets are made from pure electrolyte lead. Electrolyte "reagents" (combinations of glue with either goulac or binderine) are added.

The cell voltage ranges from 0.3 to 0.70 V.

19) Melting kettle - Deposited cathodes are thoroughly washed by dipping in water and are charged to melting kettles, where they are heated to 970°F. The molten lead is then cast into ingots.

20) Electrolyte preparation - The fluosilicic acid is prepared by reacting fluorspar with sulfuric acid to form hydrofluoric acid. This acid in turn is allowed to react with silica.

21) Slime treatment plant - The spent anodes with adhering slimes are first washed. The slimes are then scraped off and repulped, filter pressed, and dried to approximately 8

percent moisture. Generally, the slimes are melted in a small reverberatory furnace to produce a slag. This slag is partially reduced in a second reverberatory furnace to remove precious metals. It is then transferred to the smelting department for production of antimonial lead, the reduced portion being returned to the melting furnace for slimes. Then copper and bismuth are removed from the antimonial lead, and any selenium and tellurium fractions are also removed by adding nitre.

The slime treatment plant can be a potentially significant source of air pollution because the operations require many driers and furnaces.

5.5 MAJOR POLLUTANT SOURCES

The overall emissions from the lead industry are less compared with those of other nonferrous industries. In the industry the sintering, blast furnace, slime treatment operations and slag handling operations can be considered as important sources of emissions.

° Sintering - The gases mainly contain volatilized oxides such as SO_2, SO_3, As_2O_3 and Sb_2O_3. The fumes which are circulated to special treatment plants contain lead, antimony, zinc, cadmium, germanium, selenium, tellurium, indium, thallium, chlorine, fluorine and arsenic. Particulate emissions for the lead sintering process are approximately 520 pounds per ton. Almost 90 percent of the plants are equipped with some kind of control devices. But the annual

emissions of 17,000 tons are significant. The gases also contain sulfur dioxide.

° Blast furnace - Process operating temperature is approximately 1875°F. The emission rate is 250 pounds per ton. Particulate emissions are very friable and carry a considerable quantity of lead ore and volatilized metals. The fumes evolved from the blast furnace contain Pb, Sb, Se, CO, Te, Cl, F, In, Tl, Zn, Cd and As. Concentrations of trace metals present in the particulate emissions are 0.01 to 1 ppm Cd, 0.01 to 0.1 ppm Cu, 1 to 10 ppm Mg, 0.01 to 1 ppm Mn, 0.01 to 1 ppm Ni, 0.1 to 100 ppm Pb, 0.01 to 1 ppm Sn, and 0.01 to 1 ppm V. Exhaust gas temperature is around 1800°F and the sulfur dioxide content is low. The dust is very minute in nature and requires high efficiency control equipment.

Slag is formed at the peak temperature of the furnace and contains oxides of Fe, Ca, Si, Al, Mg and Mn. The elements Zn, Cl, F, Ge, As, Pb, Sb, Cd, Cu and Ag are also present in the slag in significant concentrations.

REFERENCES FOR CHAPTER 5

1. Paone, J., Lead, In: Mineral Facts and Problems. U.S. Department of the Interior, 1970.

2. Wixson, B.G., and Others. Pollution from Mines in the "New Lead Belt" of Southeastern Missouri. Proceedings of 24th Industrial Waste Conference, 1969.

3. Kirk-Othmer, Encyclopedia of Chemical Technology. John Wiley and Sons, Inc. New York, New York.

4. Vandegrift, A.E., et al. Particulate Air Pollution in the United States. Journal of Air Pollution Control Association. Vol. 21, No. 6, June 1971.

5. Appendix to First Edition of Denver Modern Mineral Processing Flow Sheets, Denver Equipment Company, Denver, Colorado.

6. Exhaust Gases from Combustion and Industrial Processes. Engineering Sciences, Inc. Washington, D.C. October 2, 1971. Distributed by National Technical Information Center.

7. Gibson, F.W. Smoke Handling in a Lead Smelter. Missouri Lead Company. Boss, Missouri 65440.

8. Phillips, A.J., The World's Most Complex Metallurgy, Transactions of the Society of AIME. Vol. 224. August 1962.

9. Krebs Engineers, High Energy Gas Scrubbing at Low Pressure Drop. California.

10. Lee, Jr., E.R. and D.J. Von Lehmden. Trace Metal Pollution in the Environment. Journal of the Air Pollution Control Association, October 1973.

11. Semran, K.T. Control of Sulfur Oxide Emissions from Primary Copper, Lead and Zinc Smelters - A Critical Review. Journal of Air Pollution Control Association, April 1971.

6.0 ZINC INDUSTRY

6.1 INDUSTRY BACKGROUND[1]

In 1971, the United States produced slightly more than half a million short tons and consumed an estimated 1.25 million short tons of zinc in addition to about 0.4 million short tons of secondary zinc. Six leading countries, Canada, Russia, United States, Peru, Mexico, and Australia, produce more than 60 percent of the world's total.[2] In 1969, about 63 percent of the total domestic zinc production was from zinc ore, 18 percent from lead-zinc ore, 9 percent from lead ore, and the remaining from all other ore sources. In the same year, the United States consumed about 1.35 million short tons of slab zinc, 42 percent of which was for zinc-base alloys, 35 percent for galvanizing, 13 percent for brass mills, 4 percent for rolled zinc, and 3 percent for zinc oxide.[3] Tennessee, New York, Idaho, Colorado, and Pennsylvania produce about 60 percent of domestic zinc ores. Tennessee, with 8 of the 25 leading mines, produced approximately 25 percent of domestic output in 1969. A total of 25 states produce zinc ore. In 1968 there were 15 zinc smelters, but the number decreased to 8 in 1971. The Nation's smelter capacity was 766,433 tons in 1971.

Recoverable identified resources (reserves) are estimated to be about 45 million tons in the United States and 235 million tons worldwide.

An estimated range of the Nation's requirements for zinc in the year 2000 is 2.46 to 4.7 million short tons. Other metals like aluminum, may replace zinc for some uses. If this occurs, requirements for zinc in the year 2000 will be at the minimum of the range.

The United States is the world's leading producer of zinc metal, followed by Japan and the U.S.S.R. Some of the domestic companies control important zinc mines in Canada, Mexico, Bolivia, Argentina, Peru, Australia, and Territory of South-West Africa.

Zinc mines are mainly located in areas remote from cities and populated by the people dependent on the mines for employment.

Table F-1 in Appendix F lists the names of companies processing zinc ore.

The zinc industry suffered several setbacks in 1970 after steady growth during the preceding 2 years. The supply and consumption of all zinc elements declined, and many mines and smelters closed in 1971. In 1972 the consumption of slab zinc rose to a new high level, but most of the Nation's demand was met by imports. Table 6.1 lists the principal companies and their smelter and electrolytic refinery capacities in the years 1969, 1970, and 1974.

Table 6.1 ZINC SMELTER AND ELECTROLYTIC REFINERY CAPACITIES [4]

Company	Plant location	1966	1967	1968	1969	1970	1971	1972	1973	1974
Electrolytic plants:										
ASARCO.....	Corpus Christi, Tex.	100.0	100.0	100.0	100.0	100.0	100.0	100.0	100.0	100.0
American Zinc Co.....	Sauget, Ill.....	75.0	75.0	75.0	80.0	80.0	-	-	[1] 72.0	84.0
The Anaconda Co.....	Anaconda, Mont....	90.0	90.0	90.0	57.7	-	-	-	-	-
Do.....	Great Falls, Mont.	162.0	162.0	162.0	162.0	162.0	162.0	-	-	-
The Bunker Hill Co.....	Kellogg, Idaho....	92.0	98.0	110.0	110.0	110.0	109.0	109.0	109.0	109.0
Horizontal-retort plants:										
ASARCO.....	Amarillo, Tex.....	52.5	52.5	52.5	52.5	52.5	52.5	52.5	52.5	52.5
American Zinc Co.....	Dumas, Tex.....	57.0	57.0	57.0	57.0	57.0	-	-	-	-
AMAX Lead & Zinc Co....	Blackwell, Okla...	94.0	94.0	94.0	94.0	94.0	86.4	72.0	-	-
Eagle-Picher Industries, Inc.	Henryetta, Okla...	45.0	45.0	45.0	-	-	-	-	-	-
National Zinc Co.....	Bartlesville, Okla.	47.1	45.3	52.0	61.0	53.0	53.0	53.0	53.0	53.0
Vertical-retort plants:										
Matthiessen & Hegeler Zinc Co.	Meadowbrook, W. Va.	48.0	48.0	48.0	48.0	48.0	-	-	-	-
New Jersey Zinc Co.....	Depue, Ill.....	56.0	56.0	70.0	70.0	70.0	-	-	-	-
Do.....	Palmerton, Pa.....	118.0	118.0	120.0	120.0	120.0	120.0	120.0	120.0	120.0
St. Joe Minerals Corp..	Monaca, Pa.....	180.0	200.0	215.0	215.0	215.0	215.0	215.0	260.0	260.0
Total.....		1,216.6	1,240.8	1,290.5	1,227.2	1,161.5	897.9	721.5	766.5	778.5

[1] Now owned by AMAX Lead & Zinc. Co.

6.2 RAW MATERIALS

Many minerals contain zinc as a major component. Table 6.2 lists the zinc-bearing minerals and their chemical formulas.

Table 6.2 ZINC-BEARING MINERALS [2]

Type of ore	Mineralogical name	Chemical formula	Zinc content percent
Sulfide-containing ores	Sphalerite	ZnS	63-67
	Wurtzite	ZnS	59-67
Oxygen-containing minerals	Smithsonite	$ZnCO_3$	48-52
	Hemimorphite (calamine)	$Zn_4Si_2O_7(OH)_2H_2O$	52-54
	Hydrozincite	$Zn_5(OH)_6(CO_3)_2$	59-78
	Zincite	ZnO	75-80
	Willemite	Zn_2SiO_4	51-56
	Franklinite	$(Fe,Zn,Mn)(Fe,Mn)_2O_4$	14-27

Zinc is usually found in nature as a sulfide. Most other zinc minerals probably have been formed as oxidation products of the sulfide. Zinc sulfide is often associated with the sulfides of other elements, especially those of lead, cadmium, iron, and copper. Characteristics of the two ores are described below:

Sulfide-containing ores - The principal ore minerals of zinc are sphalerite and wurtzite.

> Sphalerite: Resinous in appearance. Next to iron, cadmium is the most common impurity (typical cadmium content of zinc concentrate runs about 0.3%). Germanium and galena also occur in sphalerite deposits formed at relatively low temperatures. Traces of indium and tin can occur in sphalerite formed at high temperatures. Common varieties of sphalerite are yellow or resinous brown. The pure and nearly colorless variety is known as cleiophate; the dark brown to black variety with more than 10 percent Fe is known as marmatite.

Wurtzite: Hexagonal form of the sulfide; stable at temperatures above 1020°C. It is a relatively rare and less stable zinc sulfide.

Oxidized forms of zinc minerals - Most of these minerals are minor sources of zinc. They result from the oxidation of the sulfide by weathering. Smithsonite and hemimorphite are important ore minerals in many localities. Franklinite and zincite are the major minerals in the ores of Sussex County, New Jersey.

6.3 PRODUCTS

Zinc and zinc oxide are the primary products of the zinc industry. Several other valuable metals are also recovered from zinc plant residues; these residues are sometimes shipped to other nonferrous smelters for treatment. Zinc is also available as a coproduct from lead and copper smelters. The by-product-coproduct relationships are shown in Table 6.3.

Sulfuric acid is also produced by the zinc industry. In 1969 approximately 1.1 million tons of sulfuric acid was produced from stack gases evolved in roasting of zinc sulfide ores.

Table 6.3 ZINC BY-PRODUCT AND COPRODUCT RELATIONSHIPS[1]

Source	Product	Unit	Quantity	Total output, percent
Zinc	Cadmium	1,000 pounds	3,780	100.0
Do	Germanium	do	48	100.0
Do	Indium	1,000 ounces	230	100.0
Do	Thallium	Pounds	2,600	100.0
Do	Gallium	1,000 grams	W	W
Do	Lead	1,000 short tons	69	19.2
Do	Manganese	do	8	16.7
Do	Silver	1,000 ounces	4,129	12.6
Do	Sulfur	1,000 long tons	295	3.0
Do	Gold	1,000 ounces	21	1.4
Do	Calcium	1,000 short tons	748	.8
Do	Copper	do	5	.4
Do	Stone	do	W	W
Do	Iron	do	5	
Do	Zinc	do	449	84.9
Lead	do	do	57	10.7
Fluorine	do	do	12	2.2
Copper	do	do	9	1.8
Silver	do	do	2	.4
Gold	do	Short tons	5	

W Withheld to avoid disclosing individual company confidential data.

6.4 PROCESS DESCRIPTION

Figure 6.1 illustrates the zinc industry segment. The metallurgy of zinc is in many respects more complex than that of copper or lead. The processes include mining, concentration, roasting and sintering, reduction, casting, and purifying.

6.4.1 Mining

(1*) Underground Mining - Most zinc ore is obtained by underground mining. The principal classes of this method are open shrinkage, cut-and-fill, or square set stopping method. There is no stripping waste problem; occasionally the solid waste and tailing piles may cause disposal problems in heavily populated areas. The particulate emission factor for fugitive dust from mining and milling is 0.2 pound per ton of zinc produced.

Loading is done with diesel or electric shovels or loaders with high capacity. Hauling is done with trucks. The trend is toward rubber-tired, high-speed, maneuverable machines.[4]

6.4.2 Concentration

(2) Concentration - The zinc content of practically all zinc ore is very low. Concentration of ores not only increases the zinc content, but modifies the physical characteristics for ease of processing in subsequent operations. This upgrading process includes size reduction by crushing and grinding and separation by flotation. In some ores the zinc is mixed

* Numbers refer to corresponding processes in Figure 6.1.

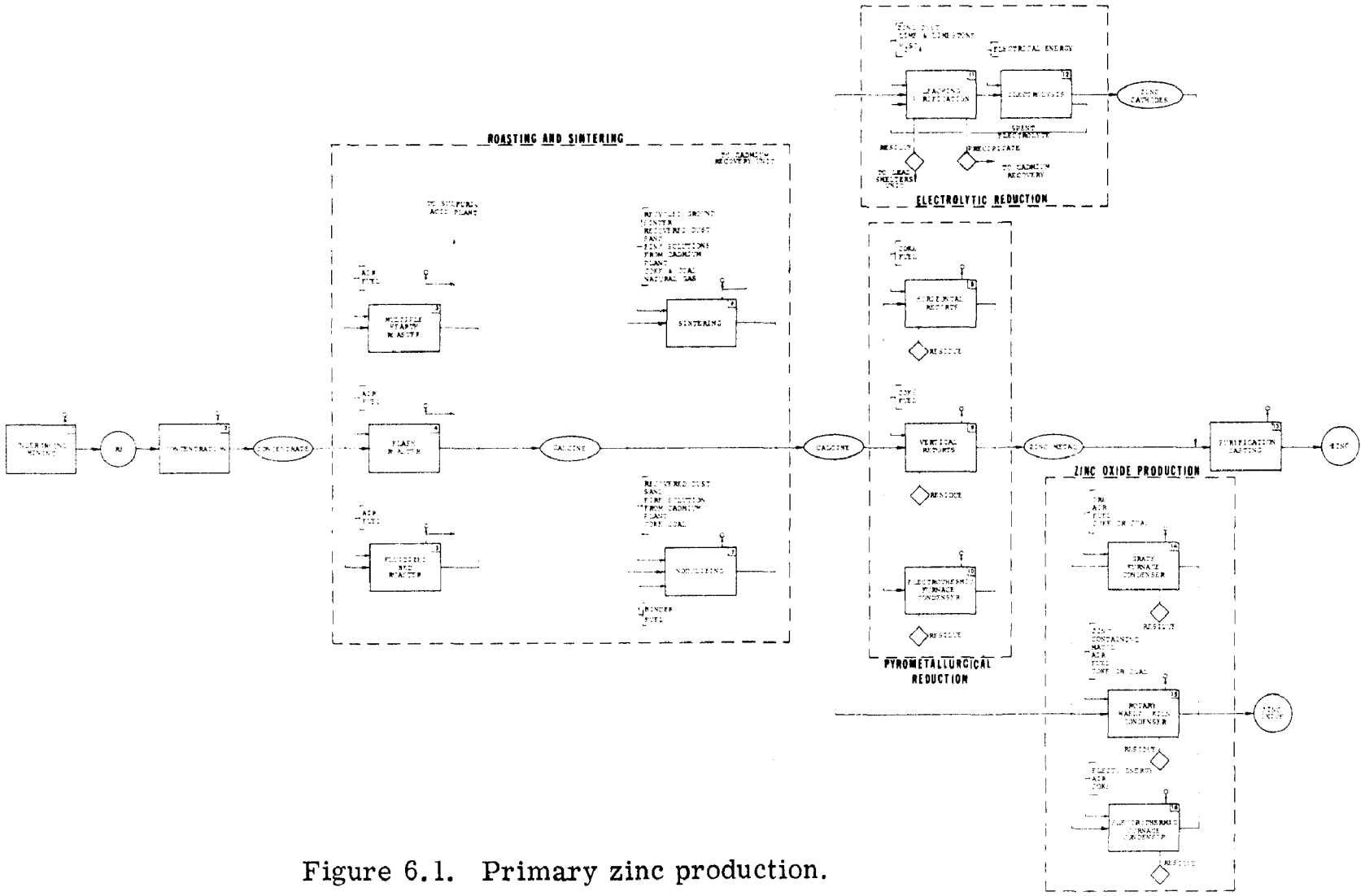

Figure 6.1. Primary zinc production.

with the lead too intimately to separate by flotation. In such cases, final separation involves sulfuric acid leaching at an electrolytic zinc plant or use of the blast-furnace process, which produces lead as a by-product. Depending upon subsequent process requirements, the concentrate may be pelletized or briquetted to improve its mechanical strength. Table 6.4 lists the elements that may be found in zinc concentrates.

The handling, crushing, and flotation operations have no extraordinary energy requirements. Fuel may be required to fire pellets or briquetts.

Emissions of potentially hazardous materials during this phase should be relatively minor. Composition of particulates from the various operations should be essentially the same as that of the raw material charged, since the process, except for pelletizing and briquetting, are performed at ambient temperatures. Briquetting and pelletizing steps are conducted at temperatures low enough to preclude significant emissions of hazardous pollutants. The flotation operation may pose a problem of waste water discharge. Flotation is normally conducted in the neutral to basic pH range, however, and the potential for leaching significant quantities of hazardous materials from the rock should be minimal.

The crushing operation produces approximately 2 pounds of particulate emission per ton of ore.[5] Belt conveyors are used for internal transport.

Table 6.4 ELEMENTS THAT MAY BE FOUND IN ZINC CONCENTRATES

Element	Zn conc.
Cu	2-1/2%
Pb	5%
Zn	50-65%
Ag	125 oz./ton
Au	2 oz./ton
Pt etc.	tr.
As	0.15%
Sb	0.05%
Bi	0.03%
Se	-
Te	-
Ni	0.015%
Co	-
Cd	0.7%
In	0.05%
Tl	-
Ge	0.05%
Sn	0.05%
Cl	-
F	-

6.4.3 Roasting and Sintering

Zinc concentrate is roasted to reduce the sulfur content, and sintered to prepare a charge for reduction. There are three types of roasters in use: multiple hearth, flash, and fluidization. Roasting and sintering are sometimes combined in a single operation although the sinter produced by such methods is more difficult to reduce.

The product from the roasters, referred to as calcine, may be either sintered or otherwise agglomerated prior to pyrometallurgical reduction, or directly subjected to electrolytic reduction.

The roasting process is a potentially significant source of hazardous pollutants as well as sulfur dioxide. Table 6.5 lists the elements found in the roaster charge that may be volatilized. The percentage of a given element volatilized, however, depends upon how the operation is conducted. Although temperature of the operation is obviously important, other factors, such as localized reducing or oxidizing conditions and sulfur displacement, may be equally important.

Table 6.5 DISPOSITION OF ELEMENTS IN THE FEED TO ROASTER

Element	Charge Composition, %	Input to Roasted Product, %	Input to Baghouse Fume, %	Amount Unaccounted for, %
Zn	55	90-98	2-10	0-1
Pb	2	85-95	5-15	0-1
Cd	0.5	25-50	50-75	0-2
As	0.1	90-100	0-10	0-1
Sb	0.1	90-100	0-10	0-1

(3) Multiple-hearth roaster - The ore is fed to the upper hearth, which serves to dry the crude material. The ore moves from the outer edge of the upper hearth toward the center and falls upon hearth 1, then to hearth 2, and in like manner through the furnace. Heat is provided through a vertical cylinder of boiler plate lined with refractory brick. The roasting temperature usually is about 1200 to 1350°F. Fuel requirement is about 3.5 to 4 million BTU per ton of feed.[4] Total particulate emissions from multiple-hearth roasters in the U.S. are estimated to be 4000 tons/year.

The offgases contain about 1100 pounds of sulfur oxides per ton of ore concentrate (333 lb/ton of zinc). These gases are usually treated at sulfuric acid plants and the tail gases are discharged to the atmosphere.

The flow rate of the exit gases range from 5000 to 6000 scfm; they contain 5.7 percent sulfur dioxide.[6]

(4) Flash roaster - The dried feed is blown into the roaster through a specially designed burner. Air is also introduced at optimum pressure to produce a specified air - concentrate mixture. The temperature in the chamber is maintained at about 1800°F. About 40 percent of the roasted product, which contains most of the coarse material (more likely to be high in sulfur), settles on the bottom and is exposed to further desulfurizing. The remaining 60 percent is withdrawn from the furnace. Sulfur content of the final product

can be controlled within the range of 0.1 to 5.0 percent.

If desired, some or all of the dust products can be fed to this furnace for further oxidation.

Offgases released from the roaster range from 10,000 to 15,000 scfm at temperatures of 1600 to 1800°F. They are passed through a waste heat boiler and cooled to 600°F. About 20 percent of the suspended dust drops out in the boiler. The SO_2 content of the offgases is about 10 to 13 percent.[6]

(5) Fluidization roasting - In the United States, this method is used for roasting zinc concentrates both for pyrometallurgical and electrolytic processes.

The feed enters the bed, and air is introduced into the roaster. A starting burner brings the bed temperature to the sulfide ignition point of about 1200°F. Then no external heat is required. The feed is fluidized and brought to the roasting temperature of about 1600°F. If slurry feeding is not desired, the temperature is controlled by water injections. The particulate emission factor (one ton per ton of zinc produced) is much higher for the fluid-bed roaster than for the multiple-hearth furnace.

About 65 percent of the sulfur (equivalent) generated from the roaster is recovered. Fluid-bed roasters have larger capacities than other types, yielding treated offgases at the rate of 20,000 to 35,000 scfm at 700 to 900°F, rich enough in sulfur dioxide for use as feed to an acid plant. The sulfur dioxide content of the offgas from the

units range from 10 to 13 percent, but generally is decreased to 6 to 8 percent in subsequent cooling and cleaning operations.

6) Sintering - Sintering is the most common agglomerating process although nodulizing is used in a few plants. Feed for the sintering machine is a mixture consisting of calcine (or sometimes concentrate), recycled ground sinter, recovered dust (in some plants), sand, zinc solutions from cadmium plants, and coal. Sintering increases the mechanical strength of the material and reduces the impurities by volatilization. Not only is additional sulfur removed, but also lead, cadmium, mercury, and halides. Operating temperature is about 1900°F. The collected fumes may be sent to a cadmium recovery plant.

Natural gas or fuel oil is used for heating. The waste gases from the sinter machines contain low but highly variable concentrations of sulfur dioxide; concentrations depend on the type of sinter produced and the amount of residual sulfur remaining in the calcined ore. Table 6.6 gives typical zinc sintering operations.

Table 6.6 TYPICAL ZINC SINTERING OPERATIONS[7]

Case:	1	2	3
Total charge capacity, tons per day	240-300	400-450	550-600
Machine size, ft	3.5 x 45	6 x 97	12 x 168
Dust in offgas, % of feed	5	5-7	5-10
Offgas SO_2 content, %	1.5-2.0	0.1	1.7-2.4

Particulate emissions from sintering operations are about 180 pounds per ton of zinc. The exit gas flow, which depends upon the feed, varies from 140 to 240 scfm per square foot of grate. The temperature of gas ranges from 500 to 700°F. No sulfur is recovered from sintering.

The sintering machines have continuous conveyors made of grate-bar pallets, upon which the feed material is placed and processed. The sinter product is conveyed to storage by belt conveyors.

(7) Nodulizing - Nodulizing is a heat-treating process used with oxidized materials such as oxide ore concentrates or materials from roasting of sulfide ore concentrates. Generally a rotary kiln is used. The waste gases contain about 0.1 to 0.2 percent sulfur dioxide. The fume content of waste gas, which is removed in bag filters, is treated for recovery of lead and cadmium.

6.4.4 Reduction Process

Reduction of zinc ores and concentrates to zinc is accomplished by pyrometallurgical reduction or electrolytic disposition from solution.

6.4.4.1 Pyrometallurgical reduction - The three major pryometallurgical reduction furnaces are the horizontal retort, the vertical retort, and the electrothermic furnace. Blast furnaces are also used outside the United States. The reducing atmosphere in the furnace, created by incomplete combustion of coal or coke, reduces the zinc oxide to metallic zinc. About 2500 BTU is required to produce 1 pound of metal.

(8) Horizontal retort - The feed material is a mixture of roasted concentrate, sinter, and coal or coke. The optimum composition is determined by the nature of the gangue in the roasted concentrate. The retort is typically 8 inches in diameter and 60 inches long. Several hundred retorts are arranged back-to-back in a furnace and are heated through indirect heat exchange by burning of fuel, usually natural gas. Temperature is maintained at about 2000°F. The flue gas passes around the retorts and does not contact the material inside the retorts or the distilling zinc vapors. The zinc vapors are collected and condensed. If the temperature is maintained below 2000°F, formation of unwanted blue powder may take place.[4]

The offgases, containing carbon monoxide, are either rejected or used as fuel. Horizontal retorts emit about 8 pounds of particulate per ton of ore concentrate. At one horizontal-retort plant, 34 percent of the particulate emissions were less than 2.5 microns in diameter, 35 percent between 2.5 and 5.0 microns, and 31 percent larger than 5 microns. The emissions are composed of zinc oxide and sulfur complexes.[4] Disposition of elements in the charge to a horizontal retort is shown in Table 6.7.

Table 6.7 DISPOSITION OF ELEMENTS IN CHARGE TO HORIZONTAL ZINC RETORT

Element	Charge Composition, %	Input to Metal, %	Input to Residue, %	Amount Unaccounted for, %
Zn	55	90-95	5-10	2-3
Pb	2	80-85	15-20	0-1
Cd	0.1	80.85	5-15	0-5
As	0.1	0-5	80-90	0-5
Sb	0.5	0-5	80-90	0-5

(9) Vertical retort - Reduction by vertical retort is a continuous operation using a briquetted sinter or calcine. The briquettes are mixed with coke or coal plus a binder and fed to the top of the unit. The retort surface is heated to about 1300°C. As the briquettes travel down to the bottom of the unit, the zinc is volatilized, travels upwards, and is collected in condensers at the top of the unit. Vertical retorts emit 100 pounds of particulate per ton of ore concentrate.

(10) Electrothermic process - Sinter, briquette, and coke are charged at the top of the unit. An electric current generates heat via the resistance of the charge. The vaporized zinc is collected in a condenser, and some of the residue from the furnace is recycled to recover zinc values. Temperatures within the furnace are about 900°C near the wall, 1200°C in the main body of the charge, and 1400°C and higher at the axis.

The residues of all these retort processes contain Pb, Cu, Ag, Au, Ni, Ge, As, Sb, Cd, Zn, In, Si, Fe, Ca, Al, Mg, and Mn, and are shipped to lead smelters.

6.4.4.2 Electrolytic reduction - Electrolytic reduction consists of leaching of the roasted or sintered material and electrolysis of the leach solution.

(11) Leaching - The calcine is first leached with sulfuric acid and spent electrolyte to separate zinc completely from lead and all the gangue material. Lime or limestone is then added to neutralize the solution and precipitate iron,

silica, antimony, and arsenic. Zinc dust is added to the clear leach solution to remove copper, cadmium, and cobalt.

(12) Electrolysis - The purified solution is subjected to electrolysis in a series of cells to recover metallic zinc. The voltage varies from 3.25 to 4.5 volts per cell, depending on the deposition period, current density, temperature, acidity, and electrode spacing. The recovered zinc is stripped from the cathode, melted (usually in induction furnaces), and cast into shapes suitable for commercial purposes. Alloying elements can be added to meet special product requirements.

From the solution, Cu, Ge, Cd, Ni, As, Sb, Co, and Fe are removed as precipitate and shipped to either copper or lead smelters for recovery of at least the copper and germanium, and occasionally other elements. Cadmium is usually recovered as a separate precipitate at the cadmium recovery unit in the electrolytic zinc plant. The spent electrolyte contains Zn, Al, Mg, Ca, Na, Cl, F, and S.

Emissions of potentially hazardous materials should be relatively minor. Total particulate emissions from electrolytic processes are 3 pounds per ton of ore concentrate. Residues generated in the leaching and purification stages may contain hazardous solid wastes requiring disposal; these residues are often recycled to copper or lead smelters for metal recovery. Table 6.8 indicates disposition of the elements found in the charge to an electrolytic zinc plant.

Table 6.8 DISPOSITION OF ELEMENTS IN CHARGE TO ELECTROLYTIC ZINC PLANT

Element	Charge composition, %	Input to metal, %	Input to residue, %	Amount unaccounted for, %
Zn	55	92-98	2-8	nil
Pb	2	nil	98-100	nil
Cd	0.1	nil	0-15[a]	nil
As	0.1	nil	98-100	nil
Sb	0.1	nil	98-100	nil

[a] Cadmium is removed for subsequent recovery in the leach plant.

(13) Purification and casting - The zinc obtained from all retorting processes must be redistilled and fractionated for production of high-grade zinc. Distillation separates the lead alloy containing indium and cadmium from the zinc. The zinc is cast and prepared for market.

When zinc is produced by the electrolytic method, the cathode zinc is melted and cast into shapes.

Atmospheric emissions from purification and casting are thought to be minor.

6.4.5 Zinc Oxide Production

Zinc oxide production closely resembles metal production, since the zinc must first be vaporized whether it is to be condensed as the metal or as the oxide. Oxidation of the zinc vapor without its being condensed as the metal is referred to as the 'direct' process. If the vapor is first condensed to zinc metal then vaporized and oxidized, the process is called 'indirect'.

The most common types of furnaces for producing zinc oxide by the direct process are the grate furnace, rotary kiln, and electrothermic furnace.

Grate-type furnace - A mixture of zinc ore and coal is ignited on a grate, and air is blown up through the bed. The vapor from the furnace passes into a separate chamber, where additional combustion air is carefully introduced to produce zinc oxide.

Rotary (Waelz) kiln - Zinc-containing material and coke are heated. The zinc vapor passes to a combustion chamber where air is added to form zinc oxide. Table 6.9 gives typical operating data of a rotary furnace in Germany.

Electrothermic furnace - Procedures with this furnace are similar to those of metallic zinc production except that combustion air is added to the vapor stream leaving the furnace to form zinc oxide. Zinc oxide is also recovered from lead blast-furnace slags in fuming furnaces similar to reverberatory furnaces; however, the zinc oxide produced by this furnace is less pure than that produced by other methods.

Atmospheric emissions from well operated and maintained zinc oxide furnaces should be relatively minor, since the product is being collected by the air pollution control equipment. Pollution potential arises, however, when the rotary (Waelz) kiln is used to volatilize Zn, Pb, Cd, As, Sb, Sn, and Bi from residues. Such varied materials as zinc ores, waste dump materials, jig tailings, jig slimes, table

Table 6.9 OPERATING DATA OF ROTARY FURNACES FOR OBTAINING ZINC OXIDE[8]

Apparatus		
Utilization		Extraction of zinc from slag and low-grade oxidic zinc ores
Capacity	Ton/day oxide	15-50
Specific load	Ton/day/m^3 furnace volume	0.3-1
Heat consumption	Kcal/kg charge	20-150 for supplementary heat; total of reaction is exothermic
Charge		Slag and/or ore mixed with reduction fuel (about 30% coke fines)
Moisture content of charge	%	6
Waste-Gas Factors		
Volume	Nm^3/ton charge	2500-15,000
Flue gas temperature	°C	550-700
CO_2 content	% vol	About 10
Dew point	°C	40-45
Dust		
Dust content of raw gas	g/Nm^3	20-50
Share below 10 μ	%	90
Chemical composition	wt %	65% Zn, 8% Pb and 1.5% S
Dust Removal		
Apparatus		Electrostatic precipitator or hose filter
Degree of precipitation	%	Above 99
Average dust content of waste gases	g/Nm^3	Below 0.5%

concentrate slimes, zinc-bearing iron ores, electrolytic zinc-leach residues, zinc-retort residues, lead furnace slags, tin ores and slags, and antimonial and arsenical gold ores can be fed to a kiln. Depending upon the fume recovery practices, emissions of hazardous pollutants can be significant.

Emissions from the fuming furnace process may also be significant since the slag is transferred in the open to the fuming furnace from the blast furnace. Further, the lead may be removed from the recovered zinc in a separate kiln, another potential source of atmospheric emissions.

Residue from the furnaces contains some potentially hazardous materials, particularly those from the rotary kiln, which uses a diversity of materials as feed stock.

6.5 MAJOR POLLUTANT SOURCES

Zinc roasting and refining are the major emission sources im the primary zinc smelting industry.

° Zinc roasting - Of the three types of roasters in use, the fluid-bed roaster is the largest source of emissions. It emits one ton of particulate per ton of zinc produced, whereas multiple-hearth roasters emit only 330 pounds of particulates per ton of zinc produced. About 98 percent of emissions from fluid-bed roasters are suppressed, but still the emissions are significant. Fumes from the roaster contain mercury, lead, chlorine, fluorine, zinc and cadmium. Offgases also contain 10 to 13 percent sulfur

dioxide from fluidized-bed type and 6 percent or more sulfur dioxide from multiple-hearth roasters.

° Zinc refining - The gases emitted contain CO and varying quantities of potentially hazardous metals. The residue which is usually shipped to lead smelters contain lead, copper, silver, gold, nickel, arsenic, cadmium, zinc, silicon, iron, calcium, aluminum, magnesium, germanium and antimony.

REFERENCES FOR CHAPTER 6

1. Heindl, R.A., Zinc, In: Minerals Facts and Problems. 1970 Edition. U.S. Bureau of Mines.

2. Wedow, Jr. H., Zinc, In: United States' Mineral Resources. U.S. Geological Survey Professional Paper 820.

3. Moulds, D.C. Zinc, In: Minerals Yearbook 1969. U.S. Bureau of Mines.

4. The U.S. Zinc Industry: A Historical Perspective. Bureau of Mines Information Circular No. 8629. 1974. United States Department of the Interior.

5. Vandegrift, et.al. Particulate Air Pollution in the United States; Journal of Air Pollution Control Association, Vol. 21, #6, June 1971.

6. Exhaust Gases from Combustion and Industrial Processes. Engineering Sciences, Inc. Washington, D.C.

7. Arthur G. McKee and Company - Systems Study for Control Emissions - Primary Non-Ferrous Smelting Industry.

8. VDI-Richtlinien. Restricting Emission of Dust and Sulphur Dioxide in Zinc Smelters. (This publication translated from German) U.S. Department of Health, Education, and Welfare.

9. Phillips, A.J. The World's Most Complex Metallurgy, Transaction of the Society of AIME Vol. 224, August 1962. p. 657.

10. National Inventory of Sources and Emissions. W.E. Davis and Associates.

11. Kirk-Othmer. Encyclopedia of Chemical Technology. New York, John Wiley and Sons, Inc. 1964.

7.0 ALUMINUM INDUSTRY

7.1 INDUSTRY BACKGROUND[1,2]

In 1971, the United States mined about 3 percent and imported approximately 25 percent of the world's total bauxite. Jamaica, the world's leading bauxite producer, accounted for 62 percent and Surinam 23 percent of total U.S. imports.

The United States is the leading producer of aluminum. We produced an estimated 35 percent (about 4 million short tons) and consumed approximately 45 percent of the world's total aluminum in 1971.

The U.S. aluminum demand in the year 2000 is estimated to be 21.2 to 42 million tons. The major consumers of aluminum are transportation, building and construction, electrical container and packaging, consumer durables, machinery, and equipment. In the future an increasing amount of aluminum will be consumed in the manufacture of liquified natural gas tankers.

Three states, Arkansas, Alabama, and Georgia, produce the entire U.S. bauxite output. Ninety-four percent of the total bauxite is used for producing alumina, and the rest for refractories, chemicals, and abrasives.

In 1971, 94 percent of the total alumina produced in the U.S. was used for aluminum and the remainder for abrasives, chemicals, ceramics, and refractories.

In 1968, three of the leading fully integrated aluminum companies (ALCOA, Reynolds, and Kaiser) produced about 76 percent of the total primary aluminum.

Plants producing alumina are generally located in coastal areas. The aluminum plants, however, are located in areas of low power costs, because electricity requirements for electrolytic reduction of alumina to aluminum are high.

Table 7.1 shows the distribution of aluminum plants with respect to population in 1971.

Table 7.1 DISTRIBUTION OF PLANTS BY POPULATION[3]

Number of Plants	Percent Capacity	Surrounding 300 Square Mile Area	
		Population	Population/Sq. Mi.
13	41.1	Less than 10,000	Less than 32
9	28.7	10-25,000	32-80
2	5.7	25-50,000	80-160
7	24.5	More than 50,000	More than 160

The Aluminum Company of America (ALCOA) has developed a new electrolytic method of producing aluminum in which chlorine rather than cryolite is used to convert the alumina. This process is expected to reduce electric power requirements by 30 percent, to be less sensitive to power interruptions than the process currently used, and to substantially reduce atmospheric emissions. It is also expected to reduce total operating costs. Recently, the possibilities of purifying aluminum sulfate by crystallization for alumina production have been explored.

Though this method is technically feasible, it is not economical as long as bauxite is available for the Bayer process.[4] Development is also under way on a method of producing aluminum metal directly from bauxite, bypassing the production of intermediate alumina.

The names and locations of the aluminum producing firms are listed in Table G-1 in Appendix G. Table G-2 presents capacities of domestic alumina plants and Table G-3 gives mine production of bauxite in the United States.

7.2 RAW MATERIALS[5]

The aluminum-containing minerals are alunite, amblygonite, andalusite, bauxite, corundum, cryolite, cyanite, sillimanite, spinel, topaz, turquoise, wavellite, and many silicates. Other sources are aluminous shale and slate, aluminum phosphate rock, dawsonite, high-alumina-content clays, nepheline, syenite, saprolite, coal ash, and aluminum-bearing copper leaching solutions.

Alunite: $KAl_3(SO_4)_2(OH)_6$ Alunite is a white mineral containing 37 percent alumina. Recently two companies explored the alunite deposits at Cedar City, Utah and found that they contain 35 to 45 percent alunite. The remainder is primarily quartz.

Aluminum phosphate rock - Several deposits of aluminum phosphate rock in Florida contain about 4 to 20 percent alumina of 0.005 to 0.02 percent U_3O_8.

Aluminous shale and slate - These formations, distributed widely throughout the United States, contain 20 to 24 percent Al_2O_3.

Dawsonite: $NaAL(OH)_2CO_3$ is a colorless or white mineral. Large quantities of dawsonite, which contain about 35.4 percent (by weight) of alumina or 18.7 percent aluminum metal, are present in northwestern Colorado.

High-alumina clays: These clays, consisting mainly of kaolinite and 25 to 35 percent alumina, occur in many deposits in the United States.

Igneous rocks: These rocks occur in Wyoming, California, New York, and many other places in the United States. They contain about 23 to 28 percent of alumina and mostly feldspar.

Saprolite: Deposits of saprolite with alumina content of 25 to 36 percent are found in southern Virginia, South Carolina, North Carolina, Georgia, and Alabama. Other deposits, associated with low-grade bauxite occur in Hawaii, Washington, and Oregon.

Coal ash: Coal ash may be considered as long-range resource. Coal that is burned to provide energy produces large amounts of coal ash; enough for extraction of alumina and sulfuric acid.

Bauxite: Bauxite, currently the world's most abundant source of aluminum, is classified according to the degree of hydration of alumina.

1) Monohydrate bauxite ($Al_2O_3 \cdot H_2O$) - The two distinct minerological forms are boehmite and diaspore.

2) Trihydrate bauxite ($Al_2O_3 3H_2O$) - Has low silica content and is known as gibbsite or hydrargillite.

The deposits of bauxite in the United States are chiefly composed of gibbsite and contain kaolinite as an impurity. The major deposits are located in Arkansas; minor deposits are in Georgia and Alabama. The iron and titanium-bearing low-grade bauxites occur in Washington, Oregon, and Hawaii. Table 7.2 presents an analysis of bauxites from Arkansas, Oregon, Washington, and Hawaii. Table 7.3 gives the analysis of bauxite from Georgia.

Most of the bauxite used in the United States is imported from Jamaica, Surinam, Australia, and Guinea. Table 7.4 shows the composition of ore from Jamaica, Surinam, and Guinea. About 90 to 95 percent of all bauxite used in the United States is consumed for producing aluminum and the rest in the production of refractories and chemicals.

Table 7.2 CHEMICAL COMPOSITION OF BAUXITES[6]
(percent)

	Arkansas	Oregon	Washington	Hawaii
Al_2O_3	40-60	35.0	38.8	25.9
SiO_2	1- 20	6.7	6.6	4.7
Fe_2O_3	3- 6	31.5	28.7	39.4
TiO_2	1-3	6.5	4.2	6.7
Loss on ignition	15.35	20.2	21.7	20-23

Table 7.3 CHEMICAL COMPOSITION OF BAUXITE IN GEORGIA[7]
(percent)

SiO_2	55.02
Al_2O_3	21.02
Fe_2O_3	5.00
FeO	1.54
MgO	2.32
CaO	1.60
Na_2O	0.81
K_2O	3.19
H_2O	8.09
TiO_2	0.65
P_2O_5	0.06
MnO	Trace
BaO	0.04
SrO	Trace
LiO_2	0.03
SO_3	0.02
Cl	Trace
CO_2	0.83
Carbonaceous matter	0.32

Table 7.4 COMPOSITION OF IMPORTED BAUXITE
(weight percent)

	Jamaica	Surinam	Guinea
Al_2O_3, total	49.0	59.8	58.6
SiO_2	0.8	3.8	4.9
Fe_2O_3	18.4	2.7	4.1
TiO_2	2.4	2.4	2.5
F	--	--	0.02
P_2O_5	0.7	0.06	--
V_2O_5	--	0.04	--
H_2O, combined	27.5	31.2	29.6
Al_2O_3, trihydrate	40-47	59.6	52.7
Al_2O_3, monohydrate	2-9	0.2	5.9

Other materials needed in the production of aluminum are sulfur, cryolite, aluminum fluoride, fluorspar, petroleum, coke, pitch binder, and carbon. About 47 pounds of cryolite is needed to produce a ton of aluminum. Lately, most of the cryolite used in the industry is produced synthetically. A typical composition of cryolite is 51 percent F, 12.5 percent Al_2O_3, 30 percent Na, and 0.30 percent SiO_2, with 0.15 percent loss on roasting.[8]

Aluminum trifluoride (a white crystalline solid) is used in large amounts as a component of the electrolyte melt in the manufacture and refining of aluminum.

Table 7.5 shows the amount of raw material required for

the production of 1 ton of aluminum.

Table 7.5 RAW MATERIALS FOR PRODUCTION OF ALUMINUM[9]
(one ton)

Material	Amount (Tons)
Sulfur	0.01 = .05
Alumina (Al_2O_3)	1.9
Cryolite (Na_3AlF_6)	0.03 - .05
Alumina Fluoride (AlF_3)	0.03 - .05
Fluorspar (CaF_2)	0.003
Anode	
Petroleum Coke	0.490 Prebake, .455 Soderberg
Pitch Binder	0.123 Prebake, .167 Soderberg
Cathode (Carbon)	0.02
Total: Approximately	2.6 tons raw material/ton Al

7.3 PRODUCTS

More than 90 percent of the bauxite in the United States is used to make alumina and about 94 percent of this alumina is consumed by the aluminum industry. Table 7.6 presents the composition of alumina.

Table 7.6 TYPICAL COMPOSITION OF ALUMINA[1]

	Percent
Chemical composition:	
Silica (SiO_2)	0.02
Iron oxide (Fe_2O_3)	.02
Titanium dioxide (TiO_2)	.003
Phosphorus pentoxide (P_2O_5)	.0
Potash (K_2O)	.0
Sulfur trioxide (SO_3)	.0
Soda (Na_2O)	.15
Calcium oxide (CaO)	.02
Lead (Pb)	.0
Alumina (Al_2O_3)	(1)
Ignition loss and water absorption:	
Loss on ignition (1,000° C)	2.67
Water absorption (bone dry-basis)	3.16

[1] Balance.

Aluminum metal and alloys are used in many products because of their low density, high electrical and thermal conductivity, resistance to corrosion, nontoxicity, and nonmagnetic and nonsparking properties.

In the United States, one company recovers gallium as a by-product. In other countries iron, vanadium, and chromium are recovered as by-products.

7.4 PROCESS DESCRIPTION

The bauxite ore is treated to refine alumina by either the Bayer process or the Combination Process, a modification of the Bayer process in which the solid residue is further treated. The Combination Process is used for treating high-silica-content bauxites, such as those from Arkansas. The following sections describe the processes involved in refining alumina from bauxite and producing aluminum (see Figure 7.1).

7.4.1 Bayer Process

The commercial Bayer process for extracting alumina from ore entails dissolving alumina in caustic and recrystallizing it as purified $Al(OH)_3$.

(1*) Mining - Ninety percent of bauxite in the United States is mined by the open-pit method.

There are no significant pollution problems. The ore is broken by drilling and blasting. Drag lines, shovels, and carry-alls are used for loading the ore, which is transported to alumina plants by truck, rail, or aerial tramlines.

---

*Numbers refer to corresponding processes in Figure 7.1.

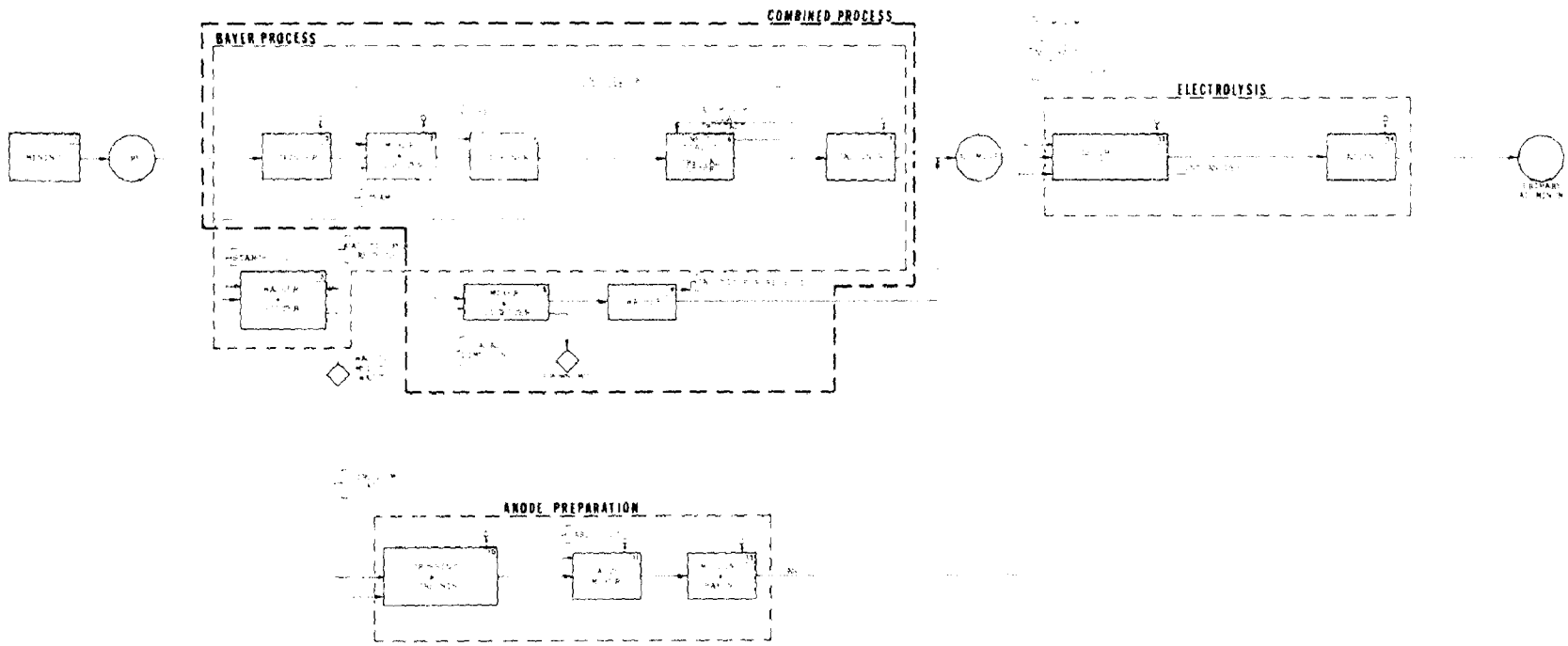

Figure 7.1. Primary aluminum industry.

(2) Grinding - The ore is often washed to remove silica or clay minerals prior to grinding. Most imported ore is dried prior to grinding; Jamaican ore does not need grinding.

Since the ore has high moisture content, grinding produces a very small amount of particulate (6 pounds per ton of ore).[10] Some water pollution from washing operations may occur.

The ground material is conveyed to the mixer by belt conveyors.

(3) Mixing and digestion - The ore is mixed with caustic soda solution at moderate temperatures to form a slurry of 50 percent solids content. The slurry is digested at high temperatures and pressures to extract the aluminum as sodium aluminate. Monohydrates are extracted at 290°F and 60 psi.

Emissions of pollutants are negligible. The slurry is pumped to the digester. The digested product is pumped to a thickener.

(4) Thickener - The sodium aluminate liquor is separated from the residual "red mud" in the thickener in the presence of flocculants, such as cooked starch and sent to precipitators. This red mud contains the impurities present in bauxite, such as iron oxides, titanium oxide, in the form of sodium-aluminosilicate, alumina, and caustic soda. The quantity of mud formed depends upon the type of ore and its contaminants, ranging from 650 pounds (for Surinam bauxite) to 2 tons (for Arkansas bauxite) per ton of alumina produced.

(5) Washing and filtering (of red mud) - The red mud is either filtered or countercurrently washed. The residual mud slurry is pumped to a waste area. The wash liquor is concentrated by

evaporation to recover caustics. Tables 7.7 and 7.8 lists the major insoluble and soluble constituents of Jamaican red mud. The red mud (residue from the thickeners) is the major waste problem of the bauxite refinery.

Table 7.7 INSOLUBLE SOLIDS OF RED MUD FROM JAMAICAN BAUXITE[11]

LOI	11.0
SiO_2	5.5
Al_2O_3	12.0
Fe_2O_3	49.5
P_2O_5	2.0
CaO	8.0
Na_2O	3.5
TiO_2	5.0
MnO_2	1.0
Miscellaneous	1.5

Table 7.8 SLURRY SOLUBLE SOLIDS OF RED MUD FROM JAMAICAN BAUXITE[11]

Al_2O_3	2.5 g/kg liq.
NaOH	3.7 g/kg
Na_2CO_3	1.6 g/kg
Na_2SO_4	0.4 g/kg
NaCl	0.7 g/kg
$Na_2C_2O_4$	0.1 g/kg
Specific gravity	1.008
pH	12.5
BOD	6 ppm
COD	148 ppm

Table 7.9 gives chemical analyses of red muds from processing at three different companies.

Table 7.9 CHEMICAL ANALYSES OF RED MUDS[12]

Component	Weight Percent		
	Alcoa Mobile, Ala. (Surinam)	Reynolds Bauxite, Ark. (Arkansas)	Reynolds Corpus Christi, Texas (Jamaica)
Fe_2O_3	30-40	55-60	50-54
Al_2O_3	16-20	12-15	11-13
SiO_2	11-14	4-5	2.5-6
TiO_2	10-11	4-5	trace
CaO	5-6	5-10	6.5-8.5
Na_2O	6-8	2	1.5-5.0
Loss on ignition	10.7-11.4	5-10	10-13

(6) Precipitation - The sodium aluminate liquor from the thickeners, also known as aluminate liquor, is rich in alumina. The liquor is filtered and cooled to 50 to 60°C. Controlled agitation of the cooled liquor in the presence of recycled aluminum hydrate crystals precipitates about 50 percent of the alumina.

The precipitate is separated, washed by filtration (usually in rotary filters), and fed to calcination furnaces. The filter liquor is recycled.

The remaining insoluble red mud from the first filtration is the only pollutant.

(7) Calcination - The hydrated alumina is fed to a rotary furnace,

where it is calcined to about 1200°C. This operation eliminates about 45 percent of the water and converts the alumina into a crystalline form in which it is shipped to alumina plants. Table 7.10 shows the composition of high quality alumina.

Table 7.10 COMPOSITION OF A HIGH QUALITY ALUMINA[8]

Composition	Percent
H_2O, combined (loss on calcination)	0.05 to 0.15
H_2O, adsorbed (loss at 110°C)	0.20 to 0.50
SiO_2	0.005 to 0.015
Fe_2O_3	0.005 to 0.020
TiO_2	0.004 to 0.005
P_2O_5	<0.002
V_2O_5	<0.004
ZnO	<0.010
Na_2O	0.40 to 0.80

Oil or gas fuel is needed for heating the rotary furnace. About 200 pounds of particulates are emitted per ton of alumina produced.[10]

7.4.2 Combined Process (also called Sinter Process)

This process is normally used on bauxites containing more than 8 percent silica. The only difference between this process and the Bayer process is further treatment of red mud.

Mixer and digester - The red mud is mixed with limestone and sodium carbonate and sintered at 1100 to 1200°C. At this temperature, silica is converted to calcium silicate (called brown mud) and the aluminum is converted to sodium aluminate. These sintered products are further digested to produce additional sodium aluminate.

Oil or natural gas is required for sintering. A considerable amount of particulate pollution is generated.

The large quantity of brown mud generated in the process is either discarded or further heated for use in cement manufacturing.

(9) Washer - The sodium aluminate is washed in lye, filtered, and added to the main stream for further processing. Caustic filtrate is recycled. No pollutants are generated.

7.4.3 Production of Aluminum

Aluminum is produced by the electrolysis of alumina in electrolytic cells (Hall Heroult Process). This process involves anode preparation and electrolysis.

The raw material (alumina powder) arrives in bulk by ship or rail. Transfer to storage bins is accomplished pneumatically or by bucket elevator systems.

7.4.3.1 Anode plant - Most plants manufacture their own carbon anodes and cathodes. The anode is made from petroleum coke, reclaimed anode carbon, and pitch.

The anode-making operation consists of crushing, screening, mixing, molding, and baking.

(10) Crushing and screening - Petroleum coke, reclaimed anodes, and anode scrap are crushed and screened.

Some particulate emissions result from this operation.

The petroleum coke arrives at the plant in bulk and is conveyed to storage. Wetting agent sprays are used at some plants to control dust during handling. Material from storage is fed to crushers, primarily by front-end loaders with enclosed cabs. The screened material is conveyed to storage bins.

(11) Paste mixing - The ground coke is preheated to a temperature of 200°F and mixed with hot molten pitch in steam jacketed mixers. The mixture is then allowed to cool.

Particulate emissions may be emitted from this operation.

Dry solids are drawn from the mix bins in measured proportions by tram cars and fed to the mixer.

(12) Molding and baking - The cold paste is molded into anode shapes by an anode press. The anodes are baked at 2100°F in a gas- or oil-fired furnace to develop the required electric conductivity and strength.

Coke and coal dusts, and fines are emitted. They are easily controllable and do not create a significant air pollution problem. Carbon dioxide, carbon monoxide, sulfur dioxide and hydrocarbons are emitted.[13] Table 7.11 presents typical anode baking furnace emissions.

Table 7.11 ANODE BAKING RING FURNACE EMISSIONS[1]

Flow rate, cfm	75,000 - 184,000
Stream loading, gr/cf	
Total solids	0.021 - 0.10
HF	0.003 - 0.03
Pitch condensate	0.01 - 0.30
Quantities, lb/1000 lb Al	
Total solids	1.0 - 5.0
Hydrocarbon	0.25 - 0.75
Total F	0.15 - 0.75
Sulfur	0.35 - 1.0

1) Although direct-fired ring furnaces have been used normally for prebaked anodes, continuous tunnel kilns are under development. Combustion conditions are significantly different and zonal temperature control closer. As a result the emission levels listed above may be reduced by factors of 0.01 in total solids and 0.02 in hydrocarbons, fluorine, and sulfur.

An overhead crane system conveys the anodes into the baking ovens, and the finished anodes to the pot rooms.

7.4.3.2 Electrolysis of Alumina -

(13) Electrolytic cell - There are two basic types of electrolytic cells, prebake multi-anode and Soderberg. The main difference is that the prebaked anode pots provide better electrical efficiency but require anode fabricating and rodding facilities. In Soderberg pots, the anode is prepared by combining carbon and binder in the top of the pot. Heat from the pot bakes the anode in place. The Soderberg anode systems are further categorized according to the method of introducing current to the anodes: horizontal-stud Soderberg and vertical-stud Soderberg.

In 1970, 69 percent of the aluminum in the U.S. was produced in prebaked cells and 25.5 percent on horizontal-stud Soderberg.[14]

The principle cell operations in the prebaked anode method are feeding the alumina to molten cryolite at 2-hour intervals, stirring to remove a high-resistance gaseous film of CF_4, and changing the carbon anodes as they are consumed. Soderberg system operations include stud planting and pulling (changing electrode connections in horizontal-stud type), feeding, and stirring.

Table 7.12 compares the operating requirements of prebaked anodes and Soderberg systems.

Table 7.12 OPERATING REQUIREMENTS OF PREBAKED ANODE AND SODERBERG SYSTEMS[9]

	Soderberg	Prebaked
Time to produce 1 ton	37 hours	27 hours
KWH to produce 1 ton	15,400	13,600
Effluent gases treated per 100,000 amperes	4,000 CFM	23,500 CFM (no hoods)
Water - Gas Ratio	3.3-4.4 Gal / 1,000 CF	10 Gal / 1,000 CF

The electrolysis of the alumina involves decomposition of alumina by continuous current flow through an electrolytic cell containing alumina dissolved in molten cryolite. Anthracite mixed with soft pitch may be added to the cell as lining paste. A small amount of aluminum fluoride is added to combine with the impurities of alumina and to form artificial cryolite. The cryolite dissolves the alumina at a relatively low temperature, in comparison with alumina's melting point of 3595°F. The temperature inside the cell is maintained at 965 to 980°C.

A large quantity of electrical energy is required. The average U.S. plant consumes about 8.0 to 8.5 KWH/lb of aluminum; one company, however, operates successfully consuming only 6.0 to 6.3 KWH/lb of aluminum.[15]

During electrolysis aluminum metal is deposited at the cathode. Oxygen is liberated from the bath and reacts with the carbon of the anode to form carbon dioxide and carbon monoxide. The carbon dioxide rises through the alumina covering of the electro-

lytic cell, carrying small amounts of alumina dust and fluorides that produce hydrogen fluoride on contact with the air. Almost all industries provide for collection and control of the HF emissions.

Spent anodes from the reduction pots are returned to the rodding section, where the remaining carbon is stripped off and mixed with the incoming calcine coke in the carbon plant.

The main pollutants include alumina, tar-pitch, distillation products, inorganic fluorine compounds, oxides of sulfur, hydrogen sulfide, carbonyl sulphide, carbon disulfide, silicon tetrafluoride, and water vapor.[16]

Emissions from the horizontal-stud Soderberg cell are 98.4 pounds of particulate, 26.6 pounds of gaseous fluoride (HF), and 15.6 pounds of particulate fluorides (F) per ton of aluminum produced. Emissions from the vertical-stud Soderberg cell are 78.4 pounds of particulate, 30.4 pounds of gaseous fluorides (HF), and 10.6 pounds of particulate fluorides (F) per ton of aluminum. Emissions from the horizontal-stud Soderberg also include hydrocarbons.

The particulate contains Al_2O_3, AlF_3, Na_2CO_3 and carbon dust. Table 7.13 gives representative particle sizes of effluents from prebaked and horizontal-stud Soderberg cells.

The emissions of both particulate and fluorine compounds from the bath increase with increasing temperature, decreasing bath ratio of NaF/AlF_3 (weight percent), and decreasing alumina content. The hydrogen fluoride emissions are generated primarily as a result of moisture reacting with AlF_3 containing materials.

Table 7.13 REPRESENTATIVE PARTICLE SIZE DISTRIBUTIONS OF UNCONTROLLED EFFLUENTS FROM PREBAKED AND HORIZONTAL-STUD SODERBERG CELLS [17]

Size range μm	Particles within size range, wt %	
	Prebaked	Horizontal-stud Solderberg
1	35	44
1 to 5	25	26
5 to 10	8	8
10 to 20	5	6
20 to 44	5	4
> 44	22	12

The HF emissions increase directly with the partial pressure of the water.[16] The moisture is from the atmosphere, from moisture content of Al_2O_3, and from burning of the hydrocarbons in the anodes.

The fluoride particulates range in size from about 0.05 to 0.75 μm with the majority of particles smaller than 0.25 μm.[18] The fluorine content of the total gases, withdrawn from the pots or pot rooms may vary from 2 to 40 mg/ft^3.[19] Another study reports the fluorine content of the total gas, on weight basis, varies between 18.97 and 25.63 Kg/ton of raw material. According to the same report, cooling the process by 5 degrees centigrade, will reduce fluorine consumption by 0.2 Kg/ton of raw material, while increasing the cryolite ratio of 0.1 will effect approximately a 3 Kg/ton savings.[20]

Fifty percent of the fluorine present in the emissions from prebaked pots occurs as HF, while 90 percent of the fluorine in Stud Soderberg pot emissions occur as HF.[21]

The gas flow rate for vertical stud Soderberg cells is 300 to 600 scfm per pot, while the flow rate for prebaked and horizontal cells is 1800 to 3500 scfm per pot. The exhaust temperatures of the gases from the electrolytic pots are approximately 1700 to 1800°F, while the velocity is between 25 and 50 fps.[22] This exhaust is mixed with ventilation air prior to gas treatment.[22] Table 7.14 gives the mass flow rate of exhaust gases from cells, Soderberg or prebaked. Table 7.15 presents a summary of aluminum smelter effluents.

Table 7.14 ESTIMATED COMPOSITION OF THE AIR DISCHARGED FROM THE CELL ROOM BEFORE CONTROL EQUIPMENT[12]

Gas phase	Pounds per hour	Pounds per ton aluminum
Hydrogen fluoride[a]	230	20.0
Sulfur dioxide	115	10.0
Carbon monoxide	10,600	910.0
Carbon dioxide	24,000	2,090.0
Dilution air	37,200,000	3,200,000.0
Total	37,234,945[b]	3,203,030.0

a) Expressed as pure fluorine.

b) Equivalent to an air flow of 7,700,000 scfm.

7.4.4 Finishing Operations

(14) Casting and homogenizing - The pure aluminum deposited at the bottom of the pot is siphoned into a holding ladle. The molten metal is transferred into holding furnaces, then cast into billets, slabs, or 'T' shapes. The cast billet is passed through a homo-

Table 7.15 ALUMINUM SMELTER EFFLUENTS MODELS[23]

Component	New Prebake			Old Prebake			VSS Soderberg			HSS Soderberg		
	Total	Prim.	Sec.	Total	Prim.	Sec.	Total	Prim.	Sec.	Total	Prim.	Sec.
Solid Fluorides[1]												
Quantity, lb/Mlb Al	10	9.5	0.5	10	8.0	2.0	3	1.5	1.5	10	8.0	2.0
Loading, mg/m^3	-	61	0.32	-	51	1.3	-	47	0.7	-	37	0.9
HF												
Quantity, lb/Mlb Al	13	12.6	0.4	13	11.7	1.3	20	17.0	3.0	13	11.7	1.3
Loading, mg/m^3	-	81	0.25	-	75	0.8	-	543	1.4	-	53	0.6
Total Fluoride[2]												
Quantity, lb/Mlb Al	23	22.1	0.9	23	19.7	3.3	23	18.5	4.5	23	19.7	3.3
Loading, mg/m^3	-	142	0.57	-	126	2.1	-	590	2.1	-	90	1.5
Alumina[1]												
Quantity, lb/Mlb Al	20	19.0	1.0	20	16.0	4.0	3	1.5	1.5	20	16.0	4.0
Loading, mg/m^3	-	122	0.64	-	103	2.6	-	47	0.7	-	73	1.8
Total Solids												
Quantity, lb/Mlb Al	48	46.1	1.9	48	41.3	6.7	39	25.9	13.1	49	38.2	10.8
Loading, mg/m^3	-	295	1.2	-	265	4.4	-	826	6.1	-	174	18.4
Sulfur Oxides[3]												
Quantity, lb/Mlb Al	15-50	14-48	1-2	15-50	14-45	1-5	15-50	13-43	2-7	15-50	14-45	1-5
Loading, mg/m^3	-	90-300	0.6-1.2	-	90-300	0.6-3.2	-	420-1380	0.9-3.2	-	64-206	0.4-2.3
Diluent Air[4]												
10^6 cu. ft./Mlb Al	27.5	2.5	25	27.5	2.5	25	35.5	0.5	35	18.5	3.5	3.
Collection Efficiency												
Solid F, %[1]		95			80			50			80	
HF, %		97			90			85			90	
Total F, %		96.0			85.6			80.4			85.6	

1 Includes fugitive dusts from cell room.
2 Reported range 12.8 to 33.0 lb/Mlb Al.
3 10 lb SO_2 per 1000 lb Al per percent S in anode coke.
4 Represents total cell room air.

genizing furnace to improve metallurgical properties such as grain structure and ductility.

Emissions from material handling are estimated to be about 10 pounds of particulate per ton of alumina produced. Particulate from metal-casting operations contain $AlCl_3$, Al_2O_3 and cryolite. Exhaust gases contain carbon dioxide and carbon monoxide.[12]

7.5 MAJOR POLLUTANT SOURCES

Reduction cells, calcination of alumina and material handling operations are the major sources of pollutants.

° Reduction cells - Of the three kinds of cells in use, the horizontal-stud Soderberg cells have the highest emission rate.

The particulate emissions contain Al_2O_3, AlF_3, Na_2CO_3 and carbon dust. Nearly 60 percent of the particulate present is in the size range of 1 to 5 microns. A significant portion of particulate emission is fluoride. The horizontal-stud Soderberg cell emits about 98.4 pounds of particulate, 26.6 pounds of gaseous fluoride (HF) and 15.6 pounds of particulate fluorides (F) per ton of aluminum produced. The vertical-stud Soderberg cell emits 78.4 pounds of particulate, 30.4 pounds of gaseous fluorides (HF) and 10.6 pounds of particulate fluorides (F) per ton of aluminum. The particulate emissions increase with increasing temperature. The gas temperature is around 1750°F. Not all industries have adequate control.

REFERENCES FOR CHAPTER 7

1. Stamper, J.W., Aluminum, In: Minerals Year Book. Vol. I. Bureau of Mines. 1971.

2. U. S. Bureau of Mines, Minerals Yearbook, 1970.

3. Air Pollution Control in the Primary Aluminum Industry. Singmaster and Breyer. Metallurgical and Chemical Process Engineers. Contract No. CPA 70-21. July 23, 1973.

4. Saeman, W. C. Alumina from Crystallized Aluminum Sulfate. Journal of Metals, July, 1966.

5. Patterson, S. M. and Dyni, J. R. Aluminum and Bauxite, U. S. Geological Survey, Professional Paper No. 820.

6. Engineering and Mining Journal, 1971.

7. Watson, T. L. Bauxite Deposits of Georgia, Geological Survey of Georgia, Bulletin No. 11.

8. Kirk-Othmer. Encyclopedia of Chemical Technology. New York. John Wiley and Sons, Inc.

9. Hanna, T. Air Emissions from Primary Aluminum Industry. Term paper. Air Resource Programme, Department of Civil Engineering, University of Washington. Seattle, March 10, 1970.

10. Vandegrift, A. E., and others. Particulate Air Pollution in the United States.

11. Rushing, J. C. Alumina Plant Tailings Storage. Metallurgical Society of AIME, Chicago, Illinois, February 25-28, 1973.

12. Utilization of Red Mud Wastes for Light-Weight Structural Products. IITRI Project No. G-6075, prepared for U. S. Bureau of Mines.

13. Background Report In Support of Regulations and Standards for Primary Aluminum Plants. State of Washington. Department of Ecology. April 1970.

14. Marshall, R. C. A Generalized Enforcement Report on Aluminum Reduction Plants.

15. Mayers, David. New Techniques In Aluminum Production. Chemical Engineering. June 5, 1967.

16. Ball, D. F. and P. R. Dawson. Air Pollution from Aluminum Smelters. Chemical Process Engineering., 52, 1971.

17. Engineering and Cost Effectiveness Study of Fluoride Emissions Control. Volume 1, TRW Systems and Research Corp., Reston, Virginia; prepared for EPA, Office of Air Programs, R.T.P., N.C., under Contract No. EMSD-71-14, January, 1972.

18. McCabe, Louis, C. Atmospheric Pollution. Industrial and Engineering Chemistry 47(8). August 1955.

19. Sitting, M. Pollutant Removal Handbook. Noyes Data Corporation. 1973.

20. Solntsev, S. S. Computational Method of Determining Fluorine Balance During Aluminum Electrolysis. Text in Russian. Tesvetn. Metal., 40(2). 1967.

21. Less, L. N. and J. Waddington. The Characterization of Aluminum Reduction Cell Fume. AIME, New York, New York. 1971.

22. Exhaust Gases from Combustion and Industrial Processes, Engineering Science, Incorporated, Washington, D. C. October 2, 1971.

23. Dumont, Rush, J. C. Russell, Reid E. Iversen. Effectiveness and Cost of Air Pollution Abatement on Primary Aluminum Pot Lines. Presented at annual APCA Meeting, Miami, Florida, June, 1972.

8.0 TITANIUM INDUSTRY

8.1 INDUSTRY BACKGROUND

Titanium was discovered in 1790 by William Gregor, an English clergyman and mineralogist. He determined that a black magnetic sand (ilmenite) was a mineral of an unknown metallic element which he named menaccanite, after his local parish. Five years later the German chemist, Martin Klaproth, found that a mineral in Hungary called rutile was the oxide of a new metal, which he called titanium. A short time later it was established that rutile and menaccanite were minerals of the same metal. More than a hundred years later titanium was first used commercially in the United States as an additive in iron and steel manufacture. TiO_2 pigments were first available commercially in America in 1918; welding rod coatings have contained titanium since 1935.[1]

The titanium industry has grown rapidly since about 1950, when the metal was first used in defense applications. Although titanium is relatively high-priced, it is nevertheless the most economical material for certain applications. Its low density, about 57 percent of that of steel, can yield major weight savings and premium performance for aircraft. It is also highly corrosion resistant. The

demand for titanium compounds is greater than that for the metal. Titanium dioxide is used extensively as a brilliant white pigment.[1]

The birth of the titanium industry can be traced to Wilhelm J. Kroll; between 1932 and 1940 he produced a good quality ductile metal by reducing titanium tetrachloride with magnesium in a closed system. Around 1950, the U.S. Bureau of Mines studied all known processes for producing titanium metal and concluded that the Kroll process was the most promising for producing ductile metal. The Bureau constructed and operated a series of small reactors to study the process and to demonstrate its feasibility. This study was largely instrumental in establishing the domestic titanium industry. With an increasing demand for large quantities of metal in the defense program, the Office of Defense Mobilization provided funds for titanium facilities and the General Services Administration agreed to buy excess metal at market or contract prices; as a result, excess metal was stockpiled until around 1958.[1]

Because of its high ratio of strength to weight, titanium is used widely in the aerospace industry. In the 1950's less than 1 percent of the structural weight of large aircraft was titanium. During the 1960's up to 3 percent of the total structural weight of such aircraft was titanium. Some supersonic aircraft constructed after 1965 have contained over 90 percent titanium in structural members. The

Boeing 747 commercial jet airliner requires 45 tons of titanium mill products for engine components, fasteners, and critical airframe parts.[2]

The recent cancellation of the Boeing supersonic transport (SST) program and reductions in military aircraft production have caused a serious setback in the titanium industry. In 1971 titanium ore production in the United States dropped to the lowest level since 1959.[4]

The two principally occurring titanium ores are rutile and ilmenite, each with different end-use patterns. Ilmenite is used mainly for making titanium pigments, whereas rutile is used to make pigments and metal as well as other products. The U.S. is a major source of ilmenite, but produces practically no rutile and therefore must rely almost entirely on foreign sources for ores from which to product titanium metals. Production of ilmenite concentrate in the U.S. reached a high of 960,000 tons in 1968 but was down to 714,000 tons in 1971. Ilmenite imports ranged from 111,000 tons in 1968 to 231,000 tons in 1971. Rutile concentrate imports ranged from 174,000 tons in 1968 to 243,000 tons in 1970. From 20 to 40 percent of our metallic titanium requirements are imported in the form of sponge metal every year.[4] During the period from 1967 to 1971 the U.S. consumed approximately 50 percent of worldwide rutile production. In the same period, U.S. consumption of ilmenite was approximately 27 percent of world production.[4]

The U.S. Government offers exploration assistance at 75 percent of the approved cost of exploration for rutile, but no applications for assistance were submitted in 1971.[2]

About 85 percent of the ilmenite produced in the U.S. comes from two mines in New York and Florida. The remainder is produced at four small mines in New Jersey, Virginia, and Georgia. Ilmenite for the rest of the world comes mainly from one mine in Canada, one in Norway, five in Australia, and an unknown number in Russia. In 1968, domestic rutile came from only one mine in Virginia, which ceased operation during that year. Virtually all of the world's rutile output is from about a dozen mines along the east coast of Australia, several in the U.S.S.R. and one in Sierra Leone.[3]

The titanium industry is characterized by a moderately high degree of integration from raw materials to semi-finished products. Several companies mine and utilize the ore minerals in producing titanium pigments. The Titanium Metals Corporation of America, owned jointly by National Lead Company and Allegheny Ludlum Steel Corp., is fully integrated from the mine to semi-finished titanium products. The National Lead Company, with mines in the U.S. and Norway, controls approximately 50 percent of the world's reserves of ilmenite. Rutile reserves in Australia are controlled chiefly by Consolidated Goldfields of South Africa Ltd. Rutile reserves in Sierra Leone are owned 80 percent by PPG Industries, Ind., and 20 percent by British Titan Products Company, Ltd. National Lead and du Pont own or control 35

percent of the world's productive capacity for titanium pigment.[3]

In 1971, ilmenite concentrates were produced by du Pont in Starke and Highland, Florida; by Humphreys Mining Company in Folkston, Georgia; by SCM Corporation, Glidden-Durkee Division, Lakehurst, New Jersey; by NL Industries, Inc., Tahawus, New York; and by American Cyanamid Co., Piney River, Virginia. No domestic production of rutile concentrate was reported. The American Cyanamid Company closed its mine at Piney River, Virginia, in June 1971. Titanium Enterprises, a joint venture of American Cyanamid and Union Camp, installed plant facilities and initiated mining in 1972 at its Green Cove Springs property in Florida. This mine, located 35 miles inland from the ocean, is to produce some 140,000 tons of concentrates per year. American Smelting and Refining Company developed beach sand deposits discovered in New Jersey in 1957, and the company concluded a 10-year agreement with du Pont under which American Smelting will supply du Pont with up to 165,000 long tons of ilmenite concentrate per year. The site is near Lakehurst, New Jersey, and production at a rate of 20,000 tons of ore per day started in April 1973. Kerr-McGee Corporation, a major producer of titanium pigments, continued engineering work to develop methods to process mineral deposits in western Tennessee.[4]

Titanium sponge metal was produced by three companies in 1971:

Titanium Metals Corporation of America, Henderson, Nevada, owned by NL Industries, Inc., and Allegheny Ludlum Steel Corp.

RMI Company, Ashtabula, Ohio, owned by National Distillers and Chemical Corp. and U.S. Steel Corp.

Oregon Metallurgical Corporation, Albany, Oregon, partly owned by Armco Steel Corporation and Ladish Company.[4]

Because of cancellation of the SST program and the resultant poor demand for titanium metal during 1971, all three companies shut down their sponge metal facilities during that year.[4]

Nine companies produced titanium ingots from sponge metal and scrap in 1971:

Crucible Steel Company of America, Midland, Pennsylvania

Harvey Aluminum, Inc., Torrance, California

Howmet Corp., Whitehall, Michigan

Oregon Metallurgical Corp., Albany, Oregon

RMI Company, Ashtabula, Ohio

Teledyne Titanium, Inc., Monroe, North Carolina

Titanium Metals Corporation of American, Henderson, Nevada

Titanium Technology Corp., Pomona, California

Titanium West, Inc., Reno, Nevada[4]

These companies produce titanium pigments:

American Cyanamid Co., Piney River, Virginia, and Savannah, Georgia

American Potash and Chemical Corp. - Kerr-McGee Corp., Hamilton, Mississippi

Cabot Titania Inc., subsidiary of Cabot Corp., Ashtabula, Ohio

E.I. du Pont de Nemours and Co., Inc., Edge Morr, Delaware, Antioch, California, and New Johnsville, Tennessee

NL Industries Inc., St. Louis, Missouri

New Jersey Zinc Company, controlled by Gulf and Western Industries, Gloucester, New Jersey

PPG Industries, Natrium, West Virginia

SCM Corporation, Glidden-Durkee Division, Baltimore, Maryland

Sherwin-Williams Chemical Company, Ashtabula, Ohio[4]

Industry and Process Trends

In 1971, consumption of ilmenite declined more than 7 percent. Consumption of rutile, however, which is used principally for production of titanium dioxide pigment, titanium metal, and welding rod coatings, increased by 21 percent. Since demand for titanium metals is closely tied to the fortunes of the aerospace industry, the abandonment of the SST project and the slow development of commercial aviation programs created serious problems for titanium suppliers. Table H-1 in Appendix H gives data on consumption of titanium concentrates in the United States.

Titanium demand for the year 2000 is expected to be between 1.1 and 2.6 million tons. This would entail an average annual growth rate of from 2.7 to 5.6 percent from the year 1971. By the year 2000 anticipated domestic requirements for titanium metal, from 106,000 to 390,000 tons, could comprise from 5 to 30 percent of total titanium demand.[3]

About 20 percent of the domestic demand for titanium metal in 1968 was met by secondary sources. It is antic-

ipated that by the year 2000, 40 percent of the domestic requirement will be from secondary sources.[3] In 1968, approximately 150,000 tons of titanium in ilmenite was mined from sand-type deposits in the United States. Water pollution problems may prohibit any large-scale expansion of output from some of these deposits, but it may be assumed that the current rate of operation could be continued during the forecast period at current cost levels. This situation could result in the availability of 4.8 million tons of titanium. Continuation of current levels of domestic operation in rock deposits would lead to availability during the forecast period of an additional 5 million tons, also at present cost levels. Alleviation of environmental problems in mining sand deposits and the need for improved technology for mining and processing titanium minerals from rock deposits will tend to increase the cost of any additional domestic supplies of titanium during the forecast period. Consumption will probably shift to the more abundant rock-type deposits as the predominant source of titanium. Ilmenite presently is the mineral source of 85 percent of world titanium requirements. The known world supply of this mineral at reasonable costs theoretically could meet the cumulative world demand for titanium through the year 2000.[3]

Resources of rutile are limited. If mining operations are expanded to continue production of 15 percent of the total requirement for titanium, world reserves will be exhausted by the mid-1980's. The U.S. and the rest of the

world have abundant resources of ilmenite. Under conditions of increasing costs, estimated at 5 to 25 percent above 1968 prices, or improved technology, the U.S. could supply all its needs for titanium indefinitely from domestic sources.[3]

Since enough rutile may not become available to meet demands for $TiCl_4$ for pigments and metal, economic processes need to be developed for chlorinating ilmenite or for making a high-TiO_2-content product that is suitable for chlorination or for use directly as a pigment. Economically feasible methods to chlorinate titanium oxide are also needed. If chlorination of ilmenite or other high-iron-content materials are to become commercial, a use must be found for the by-product iron chloride. Similarly, in the production of TiO_2 by the sulfate method only part of the iron sulfate by-product is utilized and the remainder constitutes an expansive waste and disposal problem.[6]

8.2 RAW MATERIALS

Additional raw materials are generally not required for beneficiation of titanium ores. Ilmenite is beneficiated by classification and flotation methods along with magnetic and electrostatic separators. Rutile sands are also classified rather easily. Upgrading of hematite-ilmenite and magnetite-ilmenite ores requires crushing them with coal and smelting them in an electric furnace to produce a component mixture of molten iron and slag, which contains 70 to 90 percent TiO_2.

Considerable quantities of chlorine are required to produce $TiCl_4$. However, this chlorine is later liberated when the $TiCl_4$ is converted back to TiO_2. When titanium metal is produced, the chlorine is converted to magnesium chloride or sodium chloride. Some plants recover the reductant metal and chlorine by electrolysis.

The most common titaniferous materials are anatase, ilmenite, leucoxene, and rutile. In addition, a few deposits contain large amounts of less common materials. Perovskite, Brookite, sphene, and magnetite also contain titanium.[5]

Anatase is brown, crystallizes in the tetragonal system, and in the natural state contains 98.4 to 99.8 percent TiO_2.

Ilmenite is iron black and crystallizes in the hexagonal system. Although it consists theoretically of 52.66 percent TiO_2 and 47.34 percent FeO, at ordinary temperatures it usually contains small amounts of magnesium and manganese as well as Fe_2O_3.

Leucoxene is a fine-grained rutile or anatase, or mixtures of these with amorphous material. This product usually contains more than 68 percent TiO_2 and occurs with other titanium materials.

Rutile occurs as reddish-brown to red crystals of tetragonal structure or in granular masses. It is essentially pure TiO_2, but some deposits contain large amounts of ferric iron, tantalum, or columbium.

Titanium slag may also be considered an ore. It is produced by smelting a mixture of carbon and titanium-bearing material to yield molten iron and slag containing about 70 to 90 percent TiO_2.

8.3 PRODUCTS

The various products of the titanium industry are described briefly.

Titanium tetrachloride, $TiCl_4$, is a volatile, colorless liquid, an intermediate product used in the manufacture of titanium metals and pigments.

Titanium metal is a low-density, silvery-white metal important for its high strength-to-weight ratio and its resistance to corrosion. It is 61 percent heavier than aluminum but only 56 percent as heavy as alloy steel. The strength-to-weight ratio below 1000°F exceeds that of aluminum and of stainless steel.

Titanium dioxide pigment is sold domestically in three grades. Rutile and anatase grades are fairly pure titanium dioxide, but because of differences in crystal structure they differ in hiding power and chalking characteristics. Each is 95 to 99 percent pure TiO_2. Extended titanium pigment contains only 30 to 50 percent TiO_2, as sold commercially.

Titanium sponge is an elemental metal product with a sponge-like appearance, obtained by reducing $TiCl_4$ with magnesium or sodium. It is remelted into solid titanium ingots.

Titanium ingots include three types, classified according to the predominant crystal structure: alpha, alpha-beta, and beta. Aluminum is the most prominent alpha-stabilizing addition. Alpha-beta alloys contain some aluminum, but also contain additional metals to stabilize the beta phase. The beta alloys also have a mixed alpha-beta structure, but are predominantly beta. About 20 commercial and semicommercial titanium alloys are available to the titanium user.[3]

8.4 PROCESS DESCRIPTION

As illustrated in Figure 8.1, titanium manufacturing operations include mining, beneficiation, metal production processes, and pigment production processes.

8.4.1 Mining

(1*) Rutile - Rutile ores required for metallic titanium production are generally not mined in the United States; therefore, mining contributions to air pollution, water pollution, and solid wastes problems in the U.S. are minimal. Although some ore is imported, a large portion of the titanium for metal requirements is imported in the form of sponge metal.

(2) Ilmenite sands - Florida sands are mined by underwater suction dredges. Surface preparation includes removal of standing timber, stumps, and roots. Eight-inch-diameter holes are then drilled at 20-foot intervals and loaded and blasted. Removal is done with a suction cutterhead capable of digging 1200 tons of solids per hour at a depth 45 feet below the water surface. The slurry, consisting of 10 to 15

---

* Numbers refer to corresponding processes in Figure 8.1.

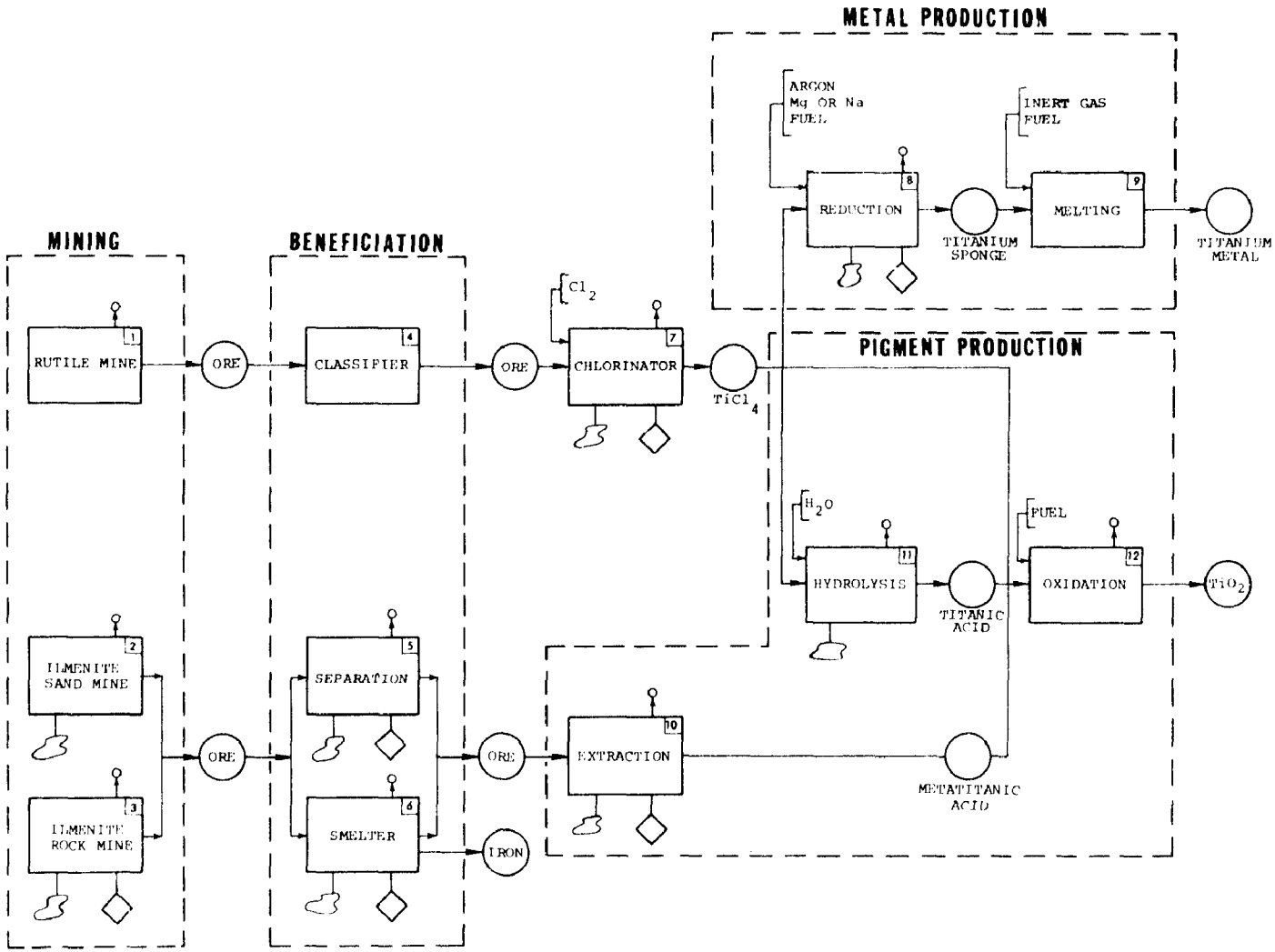

Figure 8.1. Titanium industry.

percent solids is pumped to barges, where the ore is beneficiated, as described in Section 8.4.2.[5] Since the ore is wet-mined, atmospheric emissions are minimal. The large dredging operation must be kept isolated from other water bodies so that potential water pollution problems are not intensified.

(3) Ilmenite rock - Rock deposits in New York are mined by use of electric shovels for loading and diesel trucks for hauling the ore. The ore is drilled and blasted in 35-foot bench heights. Approximately 1.2 tons of waste must be removed to obtain 1 ton of ore,[5] which averages 18 percent TiO_2. Atmospheric emissions from this operation are probably similar to those from other strip-mining activities. Both the blasting and the minerals handling at the mine may release significant quantities of fugitive dust. The overburden must be handled and stored properly to prevent the mining operation from becoming unsightly. Provisions should be made for backfill and landscaping of the mine site after the ore is extracted. Without such treatment, erosion may lead to surface runoff, with associated water pollution problems.

8.4.2 Beneficiation

(4) Rutile ore - Rutile sands are fairly easily beneficiated to yield a concentrate containing 90 to 98 percent TiO_2. The rutile ores are preferred for metal production because they are less difficult to chlorinate than ilmenite ores and they have fewer impurities that tend to carry over into the metal

escalate proportionately. Environmental restrictions may also preclude expansion of mine production.[3]

Ores from rock deposits are crushed and ground in several stages by jaw crushers, cone crushers, and rod mills to produce a minus-28-mesh material. Wet magnetic separators remove the magnetic fraction of the material. The nonmagnetic fraction containing gangue and ilmenite is sized; the ilmenite is then concentrated on reciprocating tables, dried, and upgraded to a 45 percent TiO_2 concentrate on a dry magnetic separator.[3] Wet processing results in a large quantity of slime. Ilmenite values are recovered by flotation. Equipment for the operation includes thickeners, dewatering rake classifiers, cyclone separators, and flotation cells.[5]

Considerable attention has been given to upgrading of ilmenite ores for use as a substitute for rutile, which is in rather short supply. These methods, which mainly entail the removal of iron, are being considered by ilmenite producers, rutile consumers, and the Federal government.[6] Most of the methods that have approached commercialization involve an acid-leaching process that can cause serious water pollution problems. Waste disposal problems considerably limit the productive capacity of such plants. The processes are not yet economical, and prices for upgraded ilmenite are still slightly below those for natural rutile. Three methods of upgrading ilmenite that are reported to cause less significant waste disposal problems have been proposed:

1) a U.S. Bureau of Mines pyrometallurgical process based on producing titanium-rich slag and pig iron from ilmenite, 2) a carbonyl process whose by-product, iron pentacarbonyl, can be decomposed into iron powder and carbon monoxide, which is recycled, and 3) the Murso process, which separates iron and other impurities to yield a product containing about 95 percent TiO_2.[6]

8.4.3 Smelting

Smelting - Smelting is done to upgrade certain ores containing large quantities of iron with titanium. Titanium-rich slag is recovered from the iron smelting process. The slag is produced in Canada; there are no reports of its being produced commercially in the United States.[3]

Environmental problems resulting from this process are expected to be typical of those involved in the melting aspects of the iron-making industry. Proven technology is available for the control of fumes from such melt processes. Particulate emissions from blast furnaces are well controlled to prevent plugging of the heat exchangers on those furnaces. Slag quenching activities may result in emission of hydrogen sulfide and other undesirable volatiles, and water pollution from quenching may also be significant. Ultimate disposal of the slag after it has been processed constitutes a solid wastes problem.

8.4.4 Metal Production

Chlorination - Rutile ores are used almost exclusively in the manufacture of metal because of the requirement for a chlorinated titanium intermediate product. Ilmenite ores

cannot be chlorinated economically because large quantities of chlorine are consumed by the iron in ilmenite. The iron chloride thus formed has little or no market value and poses other processing difficulties as well.

The rutile ores are chlorinated in either batch furnaces, in fluidized beds, or in molten salt. The fluidized-bed method lends itself to continuous operation. Chlorination proceeds rapidly between 800 and 1000°C. The main products are titanium tetrachloride and carbon monoxide, with small amounts of carbon dioxide and phosgene. The $TiCl_4$ is purified to a clear colorless liquid by fractional distillation or rectification. By adding small stoichiometric amounts of water, aluminum is precipitated as aluminum oxychloride. Vanadium impurities can also be removed by distillation. Alternatively the vanadium can be removed as a sulfide by the addition of H_2S.[1]

Effluent gases resulting from the manufacture of $TiCl_4$ have been reported to include 75 pounds Cl_2, 25 pounds HCl, and 23 pounds $TiCl_4$ per ton of $TiCl_4$ produced. These emissions are controlled by water and caustic scrubbers. If the scrubber effluent becomes acidified, the chlorine may be released into the atmosphere. The waste metal chlorides can release HCl if they are exposed to moisture in air. These wastes are usually buried in landfills or are hydrolyzed and injected into deep wells. Alternatively, they are disposed in impounding ponds or are dumped at sea.[7]

Increasing regulation of ocean dumping and land disposal operations is of concern to processers. The chloride disposal problem is generally considered to be considerably less severe than the problem of disposal of sulfates and acids from alternative processes. Technologies that will eliminate formation of these chloride wastes are being sought.[6]

Reduction - Production of 1 pound of titanium sponge metal, requires approximately 2.5 pounds of rutile, 5 pounds of chlorine, 1.25 pounds of magnesium, 0.9 cubic feet of inert gas, and about 0.3 pound of petroleum coke. If the magnesium chloride is processed to recover its elemental constituents, producing a pound of sponge metal requires only about 0.2 pound of magnesium and 1 pound of chlorine. Power requirements range from 6 to 15 kilowatt-hours per pound of sponge. The higher demand includes power to recover reductant metal and chlorine.[3]

Nearly all the current production of titanium metal involves reduction of titanium tetrachloride with magnesium in a closed system by the Kroll process. Sometimes sodium is the reductant instead of magnesium. In the magnesium process cleaned magnesium ingots are first placed in the bottom of the reactor, a steel pot. The reactor is then sealed, evacuated, back-filled with argon, and preheated to about 700°C. Purified $TiCl_4$ is admitted at a controlled rate to maintain the temperature between 850 and 900°C. Spongy magnesium metal and liquid magnesium chloride are

formed. The magnesium chloride is drained and recycled through electrolytic cells to recover the magnesium and chlorine. After the addition of titanium tetrachloride is stopped, the reactor is heated to about 900°C to reduce all the $TiCl_4$ completely. When the reactor has cooled, the spongy mass is removed. Salt is removed from the sponge after crushing by vacuum distillation at temperatures up to 925°C or by leaching in dilute hydrochloric acid and drying.[1]

Vent streams from the reactor vessel contain $TiCl_4$ and $MgCl_2$ vapors and reduced titanium chlorides. The stream must be controlled by scrubbers to prevent $TiCl_4$ from reacting with moisture to produce titanium hydrate fumes and HCl.[7] Conventional waste disposal techniques are employed to handle impurities in the sponge that are stripped out by distillation. Some of the material may be drummed and sold to refiners of other materials, but most of the waste, mainly in the form of metallic chlorides, is deposited in landfills or dumped at sea.[8] Landfill material is a potential ground water pollutant.

(9) Melting - Early attempts to induction-melt titanium proved unsatisfactory because of excessive contamination of the metal by crucible materials. The satisfactory solution of the problem is attributed to W. J. Kroll, who also invented the reduction process that bears his name. The main features of the induction furnace are a water-cooled copper crucible, a consumable electrode, and a vacuum system. The electrode

is made from compacted blocks of sponge metal blended with desired alloying elements. The furnace is well evacuated before melting is started. Sometimes a partial pressure or argon of helium is used. Typical melting currents run between 500 and 1000 amperes per inch of electrode diameter, at 40 to 60 volts DC. The ingots so formed are commonly remelted to improve homogeneity and to reduce the gas content of the metal.[1]

8.4.5 Pigment Production

Extraction - About half of U.S. production of titanium pigment is from ilmenite ore concentrates. The titanium content is extracted with sulfuric acid. Titanium sulfates form in an exothermic reaction that sustains temperatures between 125 and 200°C. Iron in solution is reduced by adding iron filings. Ferrous sulfate precipitates upon cooling of the solution and is filtered out. Then the titanium sulfates are converted to metatitanic acid and precipitated by the addition of water. The precipitate is filtered and dried.[1]

Particulate air pollutants from pigment production are usually controlled by wet scrubbing techniques. Spent sulfuric acid and iron sulfates are the principal waste products of this operation. Until recently, one plant has discharged acid and sulfates wastes into tidewater, relying on natural forces to dispose the waste; that company now plans to barge strong acid wastes to deep water for discharge. The TiO_2 producers claim that the minerals being

dumped are naturally occurrring salts and acids and that no current alternative technology for waste disposal is feasible. One company, which reports that environmental problems are well in hand, concentrates stronger portions of spent acid by evaporation and returns the acid to the supplier for recycling. Weaker acid portions are neutralized and diluted before being released into nearby waters.[6]

(11) Hydrolysis - Rutile may also be used to produce TiO_2 pigment. In one method, $TiCl_4$ is hydrolyzed to produce titanic acid and hydrochloric acid. The titanic acid is then precipitated and separated. Acid wastes may constitute a disposal problem.[1]

(12) Oxidation - The solid titanium acids produced by extraction and hydrolysis are burned at 900 to 1000°C to form TiO_2 and to remove residual chlorine and hydrochloric acid. The chlorine is recovered and recycled. Incentive for product recovery preclude any significant atmospheric emissions.[1]

Purified $TiCl_4$ is burned directly in air or oxygen to produce TiO_2 and chlorine. The TiO_2 forms as a fine smoke, which is collected by baghouses, and the chlorine is also collected and reused. The exothermic reaction is sustained at about 1000°C. The collected TiO_2 may be calcined at 500 to 600°C to remove residual chlorine.[1] The TiO_2 may also be subjected to additional grinding and finishing processes to meet particular specifications. Since scrubbers are used to recover Cl_2 and HCl, pollutant emissions are expected to be minimal.[7]

Table 8-1 presents a summary of titanium emissions data for all major potential sources.

8.5 MAJOR POLLUTANT SOURCES

The reduction and extraction processes are the important sources of pollution.

° Reduction operations - Gaseous streams contain $TiCl_4$ and $MgCl_2$ vapors. A large amount of solid waste containing metallic chlorides is also produced and either land filled or dumped at sea.

° Extraction - Water and solid waste as well as air pollution is emitted from this unit. Spent sulfuric acid and iron sulfates are principal waste contents. The producers dump the waste in the sea. No current alternate feasible method for waste disposal exists.

Table 8-1 SOURCES AND ESTIMATES OF TITANIUM-CONTAINING EMISSIONS[8]

	Uncontrolled Particulate Emission Factor (lb/ton)	(kg/kg x 10^3)	Reliability Code	Production Level (tons/yr)	% TiO_2 in Emissions	Reliability Code	TiO_2 Emissions Before Controls	Estimated Level of Emission Control	TiO_2 Emissions After Controls (tons/yr)
1. MINING & BENEFICIATION									
Open Pit Mining	0.2	0.1	(D)	1,850,000	15	(A)	30	0	30
Beneficiation									
Open Pit	38	19	(B)	152,000	*	(B)	2,890	90	289
Dredging	9.5	4.75	(D)	308,000	*	(B)	1,460	90	146
2. METAL PROCESSING									
Metal Ingots	0	0		-	-		0	-	0
Carbides	0	0		-	-		0	-	0
Alloys:									
Titanium-Base	0	0		-	-		0	-	0
Ferrotitanium	150	75	(D)	5,872 (tons of alloy)	45	(C)	200	40%	120
Steel Production	25	12.5	(C)	2,590 (TiO_2 consumed as Ferrotit. in steel mfg.)	*	(-)	31	78%	7

A) Excellent
B) Above Average
C) Average
D) Below Average

Table 8-1 (continued). SOURCES AND ESTIMATES OF TITANIUM-CONTAINING EMISSIONS[8]

	Uncontrolled Particulate Emission Factor (lb/ton)	(kg/kg x 10^3)	Reliability Code	Production Level (tons/yr)	TiO_2 in Emissions	Reliability Code	TiO_2 Emissions Before Controls	Estimated Level of Emission Control	TiO_2 Emissions After Controls (tons/yr)
3. OTHER MINERAL USES									
Welding Rod Coating	0	0	(C)	-	-		0	-	0
Ceramics	16	8	(C)	370	*		3	67%	1
Fiberglass	2	1	(C)	27,000	*		27	0% (controls generally not used)	27
Pigment Production									
Sulfate Calcining	150	75	(B)	344,000	100%	(B)	25,000	97%	750
Grinding	0.35	0.175	(C)	655,000	100%	(A)	115	10%	104
Drying & Packing	NA	NA		655,000	100	(A)	NA	99.5%	3.275
4. PIGMENT CONSUMPTION									
Paints, etc.	15	7.5	(C)	365,000	*		2,550	10	2.630
Other Uses	15	7.5	[illegible]	[illegible]	*		2,020	5%	1.420
5. INADVERTENT EMISSIONS									
Coal Burning	NA	NA		[illegible]	1.1	(A)	405,010	82	[illegible]
Coal Cleaning	NA	NA		[illegible]	0.1	(A)	[illegible]	8%	370

Table 8-1 (continued). SOURCES AND ESTIMATES OF TITANIUM-CONTAINING EMISSIONS[8]

	Uncontrolled Particulate Emission Factor (lb/ton)	(kg/Mg x 10^3)	Reliability Code	Production Level (tons/yr)	TiO_2 in Emissions	Reliability Code	TiO_2 Emissions Before Controls	Estimated Level of Emission Control	TiO_2 Emissions After Controls (tons/yr)
5. Oil Burners									
Residual	NA	NA		123,000 U.E.	0.35[1]	(A)	62	0	62
Distillates	NA	NA		140,000 U.E.	0.0065%	(B)	10	0	10
7. Industrial Fuels	NA	NA		100,000 U.E.	4.2[1]	(2)	4,200	37[1]	2,650
8. Non Metallic Minerals	NA	NA		6,900,000 (controlled emissions)	**	(D)	**	**	3,000
U.S. TOTALS							446,328[7]		58,351

NA = Not Applicable

U.E. = Uncontrolled Emission

* Emission factor multiplier equal to tons of TiO_2 processed or handled annually

** See Text

* Does not include pigment drying and non-metallic minerals

REFERENCES FOR CHAPTER 8

Kirk-Othmer. Encyclopedia of Chemical Technology, New York. Wiley and Sons, Inc., 1966.

Stamper, John W. Titanium, In: Minerals Year Book. Vol. I. Bureau of Mines, 1967.

Stamper, John W. Titanium, In: Minerals Year Book. Vol. I. Bureau of Mines, 1970.

Noe, Frank E., Titanium, In: Minerals Year Book. Vol. I. Bureau of Mines, 1971.

Titanium, A Materials Survey, 1957.

Iammartino, Nicholas R. Troubled Times for TiO_2.

Control Techniques for Chlorine and Hydrogen Chloride Emissions - Draft Copy, Environmental Protection Agency, March 1971, unpublished.

Report of Proposal for Liquid and Gaseous Waste Treatment for Integrated Titanium Facilities - Oregon Metallurgical Corporation, Albany, Oregon, August 11, 1969.

9.0 URANIUM INDUSTRY

9.1 INDUSTRY BACKGROUND

Before the discovery of fission in 1939, few uses for uranium were known, even though the element was discovered in 1789 and isolated in 1841. Uranium ores were initially sought primarily for their radium content, with most of the uranium content being dispersed and wasted. Early attempts to find markets for the material were largely unsuccessful. The ceramic industry used uranium compounds as yellow and green pigments. Manufacturers of tool steel alloys also used some uranium. A limited amount of uranium-bearing ores was stockpiled in hopes that a market would develop.[1]

In 1939, L. Meitner and O. R. Frisch described the fission phenomenon and suggested that a chain reaction could be thus initiated.[1] The atomic age accelerated quickly from that point and climaxed in 1945 with the bombings of Hiroshima and Nagasaki.

From the birth of atomic energy until 1966 the uranium industry was completely dominated by the Federal Government, and virtually all uranium mined was channeled into the production of nuclear weapons.

As the nuclear electric power industry began to grow in the late 1960's, the bulk of uranium usage shifted from

the Federal Government to private industry. By 1968, about 98 percent of the uranium supply to industry was used to generate electric power.[2]

Other applications include the use of uranium oxides by the chemical industry and of uranium metal for ballast material by the aircraft industry. It is anticipated that in the future nuclear reactors will be used on a large scale for the desalting of sea water.[3]

The United States produces about half of the free world's uranium output.[4] In 1971 U.S. production totaled 10,900 short tons of uranium (12,907 short tons of U_3O_8). The recoverable uranium oxide concentration in U.S. ore is about 0.205 percent. Thus the U.S. produced approximately 6.3 million tons of uranium ore in 1971.

About 70 percent of current uranium ore production in the U.S. is from the Colorado Plateau area located in Utah, Colorado, Arizona, and New Mexico. Ore from this area accounted for 73 percent of the uranium production in 1970. The Wyoming Basin area provided 25 percent of the total U.S. uranium ore and 23 percent of the total U.S. uranium production. Other states producing uranium include North Dakota, South Dakota, and Texas, accounting for about 4 percent of total U.S. uranium production in 1967.[4]

Approximately 600 mining operations were active in 1966. In 1967 only 500 were operating, and in 1971 only 240. This high percentage of mine shutdowns resulted from expiration of AEC uranium contracts in 1966. Although many

mining companies anticipated a period of uranium oversupply, the rate of increased demand for uranium to supply nuclear electric power has exceeded the estimates of many experts. Those mining companies that have continued to explore and develop new locations have good profit potential. In 1968 uranium sold for $9.43 per pound. In 1971 the price had fallen to about $7.00 per pound. It is estimated that by the turn of the century the market value will exceed $20 per pound (constant 1968 dollars).[2]

The uranium industry of the United States consists of many privately owned firms dealing in exploration, drilling, mining, sampling, milling, and processing. In 1968 the only Government-operated function in the nuclear fuel manufacturing process was enrichment, performed at three Government-owned gaseous diffusion plants located at Oak Ridge, Tennessee; Paducah, Kentucky; and Portsmouth, Ohio. Distribution of uranium milling activities in 1971 is shown in Table 9.1.

Table 9.1 U.S. URANIUM MILLING COMPANIES AND PLANTS IN 1971[4]

Company	Plant location	Capacity (tons of ore per day)
The Anaconda Co.	Bluewater, N. Mex.	3,000
Atlas Corp.	Moab, Utah	1,500
Continental Oil Co. Pioneer Nuclear, Inc.	Karnes County, Tex.	[1] 1,750
Cotter Corp.	Canon City, Colo.	450
Dawn Mining Co.	Ford, Wash.	500
Federal Resources Corp. American Nuclear Corp.	Gas Hills, Wyo.	950
Humble Oil and Refining Co.	Powder River Basin, Wyo.	[1] 2,000
Kerr-McGee Corp.	Grants, N. Mex.	7,000
Mines Development, Inc.	Edgemont, S. Dak.	650
Petrotomics Co.	Shirley Basin, Wyo.	1,500
Rio Algom Mines, Ltd.	La Sal, Utah	500
Susquehanna Western Inc.	Falls City, Tex.	1,000
Do.	Ray Point, Tex.	1,000
Union Carbide Corp.	Uravan, Colo.	2,000
Do.	Rifle, Colo.	
Do.	Natrona County, Wyo.	1,000
United Nuclear Corp., Inc. Homestake Mining Co.	Grants, N. Mex.	3,500
Utah International Inc.	Gas Hills, Wyo.	1,200
Do.	Shirley Basin, Wyo.	1,200
Western Nuclear, Inc.	Jeffrey City, Wyo.	1,200
Total		31,900

[1] Under construction; planned completion in 1972.

Source: U.S. Atomic Energy Commission.

There were 240 uranium-producing properties in 1971. One hundred ninety-three underground mines accounted for 45.3 percent of total mine output, and 29 open-pit mines produced 53.3 percent. Miscellaneous activities produced the remaining 1.4 percent.[4] Ore shipments totaled 6,370,726 tons in 1971.

In 1967 Allied Chemical Corp., Metropolis, Illinois, owned the only commercial plant for converting U_3O_8 into gaseous uranium hexafluoride, UF_6, the compound required by gaseous diffusion plants for producing uranium enriched in U^{235}. The plant, closed in 1964, was maintained in a state of readiness; and in 1967 Allied began construction to double the size of the plant to an ultimate capacity in 1969 of 10,000 tons of U_3O_8 per year. Kerr-McGee Corp. also initiated plans for a UF_6 conversion plant to be ready by 1970 with a capacity of 5000 to 10,000 tons of U_3O_8 annually. Both General Electric Co. and Westinghouse Corp. operated plants for fabricating nuclear fuel elements and announced plans for new ones. General Electric operates its facility at San Jose, California, and started construction on a new plant on a 1600 acre site near Wilmington, North Carolina. Westinghouse fabricates fuel elements at its plant at Cheswick, Pennsylvania, and was doubling capacity there. In addition, Westinghouse broke ground for a new $20 million facility at Columbia, South Carolina, planned for operation in 1969. Aerojet and Gulf also produce fuel elements. Both companies stated that the large volume of new orders for

nuclear plants had strained the capacities of their fabrication facilities.

Based on alternative future contingency requirements for uranium, annual U.S. civilian demand in the year 2000 is expected to range between 61,000 and 69,000 short tons of uranium (72,000 to 81,100 short tons of U_3O_8).[2] This rate corresponds to a demand compound growth rate of 10.2 to 10.6 percent in the period 1968-2000. The annual demand for uranium is expected to grow at average rates exceeding 25 percent until the mid-1980's. Demand is expected to peak soon after 1990 and then to decline slightly for the remainder of the century.

This forecast is discussed in detail in reference 2. Virtually all of the forecast demand is for use in nuclear electric power plants. But as much as 3 percent is allocated for other miscellaneous purposes.

Cumulative demand for this period is expected to range between 1.2 and 1.6 million short tons of uranium. As of 1969, reasonable assured reserves at $10 per pound of U_3O_8 or less ($11.76 per pound of uranium) totaled about 204,000 short tons. Another 100,000 short tons is expected to be made available as by-product leaching process. Thus, proven reserves total only 20 to 25 percent of requirements for the century. Massive exploration and development efforts will be required if future demands are to be met. Emerging technology may make it possible to mine certain low-quality deposits economically.

Uranium is not especially rare. The earth's crust contains about 40 times as much uranium as silver and about 1/10 as much uranium as copper. Its abundance approximately equals that of lead. Deposits of uranium with concentrations high enough to be of commercial value are uncommon, however, with rising demand for uranium, it will become more economical to process lower-grade ores, thus increasing available reserves. One estimate indicates that 1.3 million tons are available domestically at a price of about $25 per pound (1968 dollars).

As of 1970 an embargo was placed on uranium imports to ensure that the industry could survive during the adjustment from a munitions market to an electric power generation market. Thus, imports may in the future provide for some U.S. uranium requirements, but competing world markets may limit this supply significantly. Approximately 35 percent of known free-world uranium reserves are in the United States. Canadian ores account for 28 percent, and South African ores account for 11 percent of the known supply.

Demand projections are based on current nuclear power plant technology, by which reactors convert only about 1 percent of the energy in natural uranium. It is predicted that new types of commercial breeder reactors will utilize 50 to 80 percent of the available energy.[2] Such a breakthrough would strengthen uranium resources so that they would dwarf conventional fuel resources by a large margin.

9.2 RAW MATERIALS

Uranium milling operations require large amounts of sulfuric acid or sodium carbonate for leaching, as well as Fe^{+3}, MnO_2, $NaClO_3$ as an oxidizing agent and NaOH as an alkali. Extraction solvents such as dialkylphosphoric acid, dodecylphosphoric acid, and tributylphosphate are used with a kerosene carrier in the solvent extraction process. Various alkali anion-exchange resins are used in conjunction with nitrate or chloride elutriants in ion-exchange processes. In the purification process, HNO_3 is used to dissolve the yellow cake, and organic solvents such as tributylphosphate in a hexene carrier are used for solvent extraction and purification. Hydrogen for the reduction of UO_3 to UO_2 is usually obtained by cracking ammonia. Hydrogen fluoride is used to react directly with UO_2 to form UF_4. It is also electrolyzed to obtain F_2, which reacts with UF_4 to form UF_6. UF_4 can also be reacted with magnesium in a closed bomb to form uranium metal. After the enrichment process, UF_6 is reacted with NH_4OH to produce ammonium diuranate which is in turn made into UO_2 for pelletizing.

° Basic Types of Ores - Uranium occurs in a variety of ores in quantities of economic importance. The principal ores are listed below:

<u>Uraninite</u> - Most common ores contain UO_2 and UO_3. The massive form is called pitchblende and is often concentrated in pegmatites and primary vein deposits.

<u>Coffinite</u> - A uranium silicate ore found in western states.

Carnotite - $K_2O \cdot 2UO_3 \cdot U_2O_5 \cdot n\ H_2O$ is the most important secondary uranium ore mined.

Multiple Complex Oxides Rare Earth Oxides with Columbium and/or Tantalium -

Thorianite (Uranothorianite $(ThU)O_2$; Fergusonite - Formanite; Samarskite - Yttrotantalite; Euxenite - Polycrase;

Some western lignites have been profitably ashed to yield up to 0.5 percent U_3O_8.

Some phosphate deposits contain uranium in quantities great enough for profitable by-product recovery from the production of phosphoric acid.[5]

Primary Uranium Minerals:

Uraninite or pitchblende - Uranium dioxide
UO_2; U = 46.5 to 88.2 percent

Betafite - Oxide of columbium, titanium, and uranium
$(U, Ca)\ (C_b, Ta, Ti)_3\ O_9 \cdot NH_2O$?; U = 13.7 to 24.5 percent

Brannerite - Oxide of uranium and titanium with rare earths
$(U, Ca, Fe, Y, Tb)_3\ (TiSi)_5O_{16}$?; U = 27.9 to 43.6 percent

Davidite - a rare-earth iron-titanium oxide
$A\ B_3(O\ OH)_7$ or AB_3O_7
A = Fe^{+2}, rare earths, U^{+6}, Ca, Zn, Ta
B = Ti, Fe^{+3}, V, Cn; U = 0 to 4.4 percent

Euxenite - A rare-earth columbate-tantalate
$(Y, Ca, Ce, U, Th)(Cb, Ta, Ti)_2\ O_6$; U = 0.6 - 8.0 percent

Fergusonite
$(Y, Er, Ce, Fe)(Cb, Ta, Ti)O_4$; U = 0.8 to 7.2 percent

Samarskite
$(Y, Ce, U, Ca, Fe, Pb, Ta)(Cb, Ta, Ti, Sn)_2\ O_6$;
U 8.4 to 16.1 percent

Secondary Uranium Minerals:

Carnotite - potassium-uranium vanadate;
$K_2(UO_2)_2(VO_4)_2 \cdot 3H_2O$;
U = 52.8 to 55.9 percent

Tyuyamunite - calcium-uranium vanadate;
$CA(UO_2)_2(VO_4)_2 \cdot 7\text{-}10.5H_2O$;
U = 54.4 to 56.7 percent

Metatyuyamunite - calcium-uranium vanadate;
$Ca(UO_2)_2(VO_4)_2 \cdot 57H_2O$
U = 50.1 to 52.2 percent

Autunite - calcium-uranium phosphate;
$Ca(UO_2)_2(PO_4)_2 \cdot 10\text{-}12H_2O$;
U = 45.4 to 48.2 percent.

Torbernite - copper-uranium phosphate;
$CU(UO_2)_2(PO_4)_2 \cdot 12H_2O$;
U = 47.1 percent

Metatorbernite - copper-uranium phosphate;
$Cu(UO_2)_2(PO_4)_2 \cdot nH_2On=4$ to 8;
U = 50.8 percent

Gummite - chiefly uranium oxide with water and lead; generic term for minerals occurring as alteration products of uraninite and not otherwise identified.

Uranophane - calcium-uranium silicate;
$Ca(UO_2)_2(SiO_3)_2 \cdot 5H_2O$;
U = 55.6 percent

Schroeckingerite - water-rich carbonate and sulfate containing uranium;
$NaCa_3(UO_2)(CO_3)_3(SO_4)F \cdot 10H_2O$;
U = 26.8 percent

Coffinite - a uranium silicate;
$U(SiO_4)_{1-x}(OH)_{4x}$;
U = 60.2 percent in concentrated, but not pure sample

Zippeite - a uranium sulfite;
$3UO_3 \cdot 2SO_3 \cdot 9H_2O$? or $2UO_3 \cdot SO_3.5H_2O$?;
U = 59.1 or 64.1 percent (?)

9.3 PRODUCTS

Uranium is used principally to fuel nuclear reactors that produce electrical power. The fuel is in the form of

uranium oxide pellets. A very small quantity of uranium is used for research, military and space applications, isotopic medicine, and the Plowshare program. The metallic form of depleted uranium is used to some extent for ballast and for radiation shielding. The metal is also used by the chemical industry as a catalyst.

9.4 PROCESS DESCRIPTION

Figure 9.1 illustrates the processes in the uranium industry.

9.4.1 Mining

(1*) Shallow mines - Some uranium mines contain less than 2000 tons of ore in shallow irregular deposits that cannot be mined economically at depth. Fairly continuous production from these mines can be attained only by continuous exploration and development. These mines are typical in the Uravan mineral belt of Colorado. Mining methods vary somewhat because of the variety and irregularity of the deposits. Some mines require no more equipment than a pick, a shovel, and a wheelbarrow. Others are large enough for motorized rail equipment. The mine operator follows the ore by monitoring the working face with a geiger counter. Because of high ratios of waste to ore, the relative costs of labor and explosives also are high. Production per man shift averages only 2 or 3 tons of ore.[6]

Free silica concentrations in uranium mines can be a health hazard. Nearly all U.S. uranium ores contain 35 to 70 percent free silica. Exposure of workers can be controlled

* Numbers refer to corresponding processes on Figure 9.1.

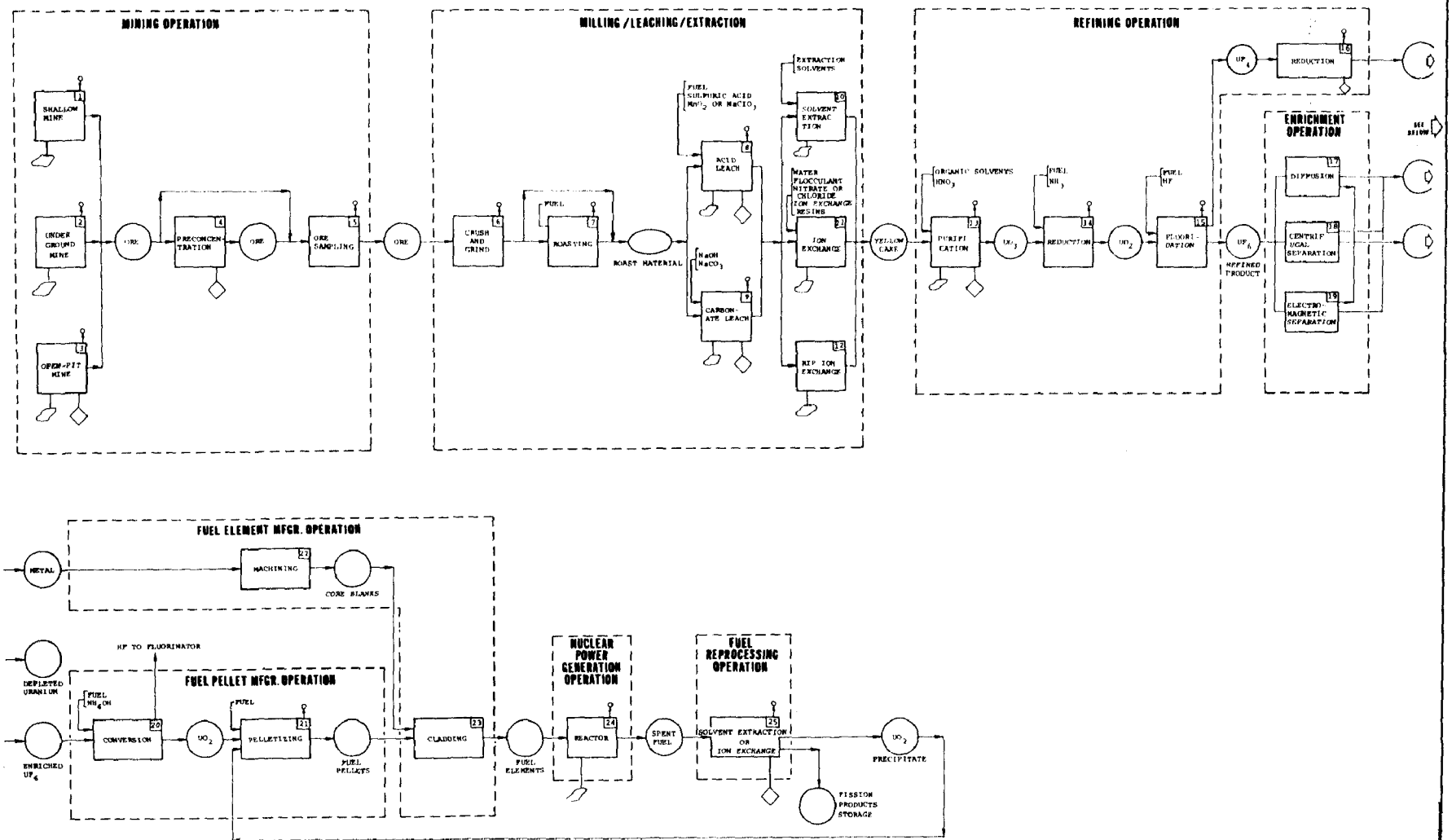

Figure 9.1. Uranium industry.

by use of wet drilling methods, by requiring the use of respirators, and by providing suitable ventilation at the mine face. In dieselized mines the U.S. Bureau of Mines recommends that 100 to 200 cubic feet of fresh air per minute be provided per brake horsepower. This ventilation rate is reported to be adequate to remove diesel exhaust fumes and to reduce radon gas concentrations to below acceptable limits if precautions are taken to ensure that the vented fresh air reaches the vicinity of the working face of the mine.[6]

Although the exhaust air may carry with it particulate matter, uranium mining "has not been found to cause measurable increases in environmental radioactivity outside the immediate vicinity of the mines."[7] Wet drilling creates the hazard of water pollution, principally by particulates and radioactive materials. Dry mining operations may create a localized dust nuisance, with associated worker exposure hazards described in the preceding paragraph.

(2) Underground mines - Large underground mines have been developed in Utah and New Mexico. These deposits may be very large, with deposits ranging from 5 to 20 feet thick and 300 to 7000 feet wide. Depths of cover range from 100 to 700 feet. Various mining methods are used, including room and pillar, longwall retreat, and panel mining. Mobile equipment may be tracked or trackless. One mine in New Mexico requires removal of about 500 gallons of water per minute, and the mine is ventilated at a rate of 25,000 cubic

feet per minute.[6] Environmental problems are the same as those with shallow mines.

3) Open-pit mines - More than half of the uranium in the United States is mined by open-pit methods. In these mines, virtually complete extraction of the ore is possible, but the ore obtained is frequently of lower grade than that from other types of mines. Stripping ratios (overburden to ore) may be as high as 30:1, and overburden depth may range to 300 feet. Generally the ore must be drilled and blasted loose, but the overburden can usually be removed easily. The mines are large and fully mechanized, with large earth-moving machinery. Fugitive dust emissions from these mining operations may be significant. Other problems include increased erosion, contaminated run-off water, and overburden disposal. Ore is usually transferred from the mines in large trucks, but some mines are equipped with rail facilities.[6] Trucking operations in remote areas generate considerable quantities of dust, especially where roads are unpaved or poorly paved. Windblown ore losses from the trucks also occur.

4) Preconcentration - Preconcentration of uranium ore is difficult without sacrificing valuable products in the tailings. As of 1969 no plants were operating in the U.S. with preconcentrator units, but electronic ore-sorting devices were used in earlier years.

Because the sizing and sorting operations in preconcentration generate some dust, mine operators should apply appropriate dust control systems as necessary.

(5) Ore sampling - Ore shipments are sampled and analyzed to determine moisture and uranium contents before they are sent to the mills. Mechanical sampling plants constructed near the mining areas for that purpose consist mainly of a three- or four-stage crushing and sample-splitting facilities. Dust from these operations is usually controlled with baghouse collectors, typically with capacity of about 15,000 cfm at an air/cloth ratio of 3 feet per minute. Workers in sampling plants are required to wear respirators in dusty areas.[6] Ore is transferred by truck or train from the mining to the milling facilities. Windblown ore losses and road dust resulting from transport of the ore both constitute fugitive dust problems, mitigated somewhat by the remote locations of the mines and mills.

9.4.2 Milling

After the ore is analyzed, it is processed (milled) to extract the uranium and to concentrate it in the form of yellow cake, a material rich in uranium oxide (U_3O_8). Impurities in the yellow cake can total as much as 25 percent. Several processing steps are entailed in the milling operation, but a given uranium mill does not necessarily use all of them.

(6) Crushing and grinding - Sand grains in uranium ore are essentially barren, but the cement that binds the grains together is rich in uranium. The ore must therefore be crushed to the size of the sand grains for release of the uranium by leaching. Crushing is accomplished in several

stages, since ore is transferred from the mines in lumps as large as 12 inches diameter. Coarse crushing is performed in jaw crushers. Fine crushing may utilize smaller jaw crushers, gyrators, hammer mills, rod mills, and ball mills.[1] The degree of required grinding varies with the deposits. In some western ores the uranium minerals are not significantly locked within insoluble materials, and extraction from 10-mesh particles is essentially complete. Processing of other ores requires much finer grinds. Grinding to 50 percent minus-200 mesh is fairly typical.[6] These crushing and grinding units release particulate matter into the air and often require some degree of dust control.

Roasting - Roasting at 500 to 600°C may enhance the extraction of vanadium from vanadium-rich uranium ores, but roasting is not required for most uranium ores. Sometimes carbonaceous material must be burned from ores containing shale, lignite, and asphalt. Roasting also improves the settling and filtering characteristics of ores containing clay minerals. Atmospheric emissions, varying with the material being driven off, may include carbonaceous material, particulates, hydrocarbons, and sulfur compounds.

Acid leaching - After the ore is ground and roasted (optional), the uranium content is leached, usually in mechanically or air-agitated tanks containing sulfuric acid or a carbonate solution. Sulfuric acid is used unless acid consumption by the particular ore exceeds about 150 pounds per ton of ore.[1] Capital costs for acid leaching circuits

are generally lower than for carbonate circuits, principally because the carbonate circuits require the use of autoclaving equipment. However, corrosion problems are more severe in an acid circuit. Acid circuits are easier to control and yield higher recoveries - yields above 98 percent are not uncommon. To obtain high efficiency the uranium must be oxidized from U^{+4} to U^{+6}, generally accomplished by the use of MnO_2 or $NaClO_3$. Ferric iron in solution is also needed for oxidation. Usually sufficient iron is present in the ore. The dissolved iron is air oxidized to the ferric ion by virtue of air agitation.

Leaching by aqueous agitation is performed at densities between 40 and 65 percent solids. Mechanical agitation with turbine impellers in baffled tanks is widely used in the United States. Continuous rather than batch leaching is practiced almost exclusively in the U.S., with 4 to 14 tanks in series. High temperatures and pressures may be required. One Canadian plant leaches at 107 to 122°F for 48 hours. Acid leaching creates large amounts of solid and liquid wastes. Undissolved materials must be disposed of, and care must be taken not to contaminate water supplies with liquid or solid wastes. Steps must also be taken to prevent escape of acid mists into the atmosphere.[1]

(9) Carbonate leaching - Carbonate leaching is used to treat ores with high lime content that would cause excessive acid consumption. With proper oxidizing conditions, yields range between 90 and 95 percent.[1] Ores usually must be ground

somewhat finer than for acid leaching because the carbonate does not react with material surrounding the uranium mineral. Leaching is slow, when done at atmospheric temperature and pressure. Autoclaves are used frequently. Uranium is precipitated from the carbonate solution with sodium hydroxide.

9.4.3 Extraction Process

After the uranium has had time to dissolve, the liquid portion of the slurry (pregnant liquor) is separated from the solids.[1] Flocculants used to accelerate the thickening and filtering of the ore from the liquor include various vegetable gums, cactus extract, high glue, polyacrylamides, and starch. Also, several synthetic polymer flocculants have been developed.

1) Solvent extraction - The uranium salts are usually separated from the leach liquor with alkylamines and organophosphorus compounds.[1] By changing process conditions the uranium salts can be partitioned from the leach liquor into an organic phase. Then the uraniferous material is re-partitioned into an aqueous solution, from which it is precipitated as "yellow cake." The various liquid discharges are potential water pollutants since the liquids may contain dissolved and suspended solids, organic materials, and radioactive wastes.

2) Ion-exchange - The ion-exchange uranium extraction process is widely used, although it has been replaced by solvent extraction in several plants. Adsorbent systems usually

incorporate strongly basic anion-exchange resins with quaternary ammonium bases that extract uranium in the form of anionic complexes. The batch process involves sorption, washing, elution, and regeneration. Automated valving equipment has reduced manual operations to the extent that the overall procedure is like a continuous process. A residence time of 7 minutes is adequate for adsorption.[1] After adsorption the uranium is eluted from the resin by acidified nitrate or chloride solutions.[6] The eluting solutions are recycled. After the uranium is eluted from the resin, the resin is flushed with fresh water to activate it for the adsorption step of the next batch of pregnant liquor. Waste water from this process contains acids and nitrates or chlorides. The waste stream must be carefully monitored if it is to be discharged into any body of water.

(12) Resin-in-pulp - Some uranium ores do not filter well after leaching and do not lend themselves to conventional ion-exchange equipment. For these ores the ion-exchange process has been modified to extract the uranium directly from the leach pulp. This modification is called the "resin-in-pulp" (RIP) process. Environmental hazards are similar to those from the conventional ion-exchange process.[6]

9.4.4 Refining Operation

(13) Purification - Yellow cake concentrates are shipped in steel drums to refining plants, where the concentrates are digested in nitric acid for purification. Tributylphosphate in kerosine or hexone may also be used in the extraction

process, which yields purified UO_3. Atmospheric emissions from this process are probably slight, consisting mainly of solvent losses from exhaust ventilation. Water pollution may result from discharge of the spent acid or organic solvents. The impurities separated from the yellow cake are reduced to a sludge, which is landfilled. Precautions must be taken to ensure that groundwater contamination does not result.

4) Reduction - Reduction of UO_3 to UO_2 is accomplished by cracking ammonia and reacting the H_2 with the UO_3 as follows:

$$H_2(g) + UO_3(s) \quad UO_2(s) + H_2O(g)$$

This process is either a batch or a continuous system; the excess hydrogen is burned or recycled, and the dust is collected and recycled. Operating temperatures range from 1500 to 1800°F. A hydrogen atmosphere is maintained until the UO_2 is cooled, to prevent oxidation and formation of U_3O_8. Reduction is essentially a closed process, but some dust and gaseous products from impurities in the reaction may be emitted.[8] The inherent economic value of the uranium virtually precludes any significant releases of uranium products to the environment.

5) Fluorination - Fluorination of UO_2 to obtain UF_6 is a two-step process. First the UO_2 is reacted with anhydrous HF, which has been preheated to 550°C. The product of this reaction, UF_4 or "green salt," is reacted with fluorine produced at the refinery in electrolytic cells. The UF_6 thus produced is purified and placed in cylinders. Pollu-

tants may be vented from any of these processes, especially from the electrolytic cells, which produce F_2 from HF and discharged with H_2 into the air. The UF_6 must be prevented from contacting moisture because it hydrolyzes rapidly with moisture to form UO_2 and hydrogen fluoride.[1]

(16) Reduction - If uranium metal is the desired product of the refining process uranium tetrafluoride is mixed with magnesium and a reduction reaction in a thermite bomb yields metallic uranium. The reaction takes place at about 1900°C,[1] and the uranium is later remelted under vacuum conditions and cast for fuel-rod fabrication or other end use. Although the metal oxide slag from this process may be a solid waste problem, the slag is used to line the reaction vessels. Also, the uranium content is recovered from any excess slag. Since this operation occurs in a sealed vessel, probability of hazardous discharge is minimal.[1]

9.4.5 Enrichment

(17) Diffusion - Enrichment by diffusion depends on isotopic differences. $^{235}UF_6$ is lighter than $^{238}UF_6$, and therefore diffuses faster through a porous membrane. Because the diffusion rates are only slightly different, a great many membranes are required for significant enrichment. Also, extremely large amounts of electrical energy are required to move the gas through the membranes. This process entails little chance of pollution. The depleted UF_6 is put back into cylinders for "permanent" storage, pending a market for the material.[1]

18) Centrifugal separation - An experimental technique, centrifugal separation also exploits differences in atomic weight to separate ^{235}U from ^{238}U. Again, the procedure holds little chance for pollution, and problems of disposing of the expended material are identical to those for diffusion plants.[1]

19) Electromagnetic separation - In this process a stream of ionized UF_6 is passed near a magnetic field. Because the lighter isotope is reflected slightly more than the heavier one, a separation can be made. This process is too expensive to be used commercially. Little potential for pollution is foreseen.[1]

9.4.6 Fuel Pellet Manufacturing

20) Conversion - Enriched uranium hexafluoride (up to 50% ^{235}U) is transferred to fuel pelletizing facilities in cylinders. It is vaporized and converted to ammonium diurinate, which in turn is dried, reduced in a rotary calciner, and converted to UO_2. The UO_2 is ground to uniform particle size for pelletizing. As in any closed system, there is little likelihood of environmental contamination.[1]

21) Pelletizing - The powdered UO_2 is measured into hydraulic process and shaped into cylinders about an inch long and half an inch in diameter.[1] These cylinders are baked in a sintering furnace and later ground to a slight hour-glass shape. Particulate emissions from the grinding process are collected and recycled. Pollutant emissions and fuel combustion emissions are minimal.[1]

9.4.7 Fuel Element Manufacturing

(22) Machining - If unenriched uranium metal is to be used as fuel in a heavy water nuclear reactor, the metal is rolled or forged by the refining operation into a machinable form. Core blanks are then machined from the metal and clad to form fuel elements. The only likely discharges from the machining process are particulates in the air and in cutting fluids. High-efficiency dust filters collect the uranium particles for recycling.[1] All fuels used in the U.S. are enriched however.

(23) Cladding - Fuel pellets or core blanks are placed in a metal casing for fission product containment, better heat transfer, and to minimize fuel corrosion before they are put in reactors. Little pollution from unirradiated cladding is likely. However, irradiated cladding becomes radioactive from neutron activation.

9.4.8 Nuclear Power Generation

(24) Reactor - Whether the fuel is oxide or metal, enriched or unenriched, the power from a nuclear reactor is provided by nuclear fission. Pressurized water reactors are operated at high temperatures and pressures for higher energy efficiency. Consequently, if pressure is lost, thermal run-away can occur as gas bubbles on fuel element surfaces do not offer adequate heat transfer. Radiation leakage is the most publicized danger, and even though the system is well designed from the standpoint of containment, contamination of air or water is possible. The process can also cause thermal

pollution. Nuclear power plants discharge four gaseous radio-nuclides, ^{3}H, ^{85}Kr, ^{131}I, and ^{133}Xe into the atmosphere.[9] The radio active xenon is also present as ^{135}Xe. Although ^{131}I has a short half-life and decays during normal handling and storage, ^{85}Kr and ^{3}H have longer half lives; their buildup in the atmosphere or in water could be a significant hazard when nuclear power production reaches predicted levels.

9.4.9 Fuel Reprocessing

Solvent Extraction or Ion Exchange - Before they are completely exhausted, fuel elements are removed from nuclear reactors and processed to separate fissionable uranium and plutonium from fission products. First, the fuel elements are placed underwater at the reactor site for 4 months to allow short-lived radioactive products to decay. Then the elements are placed in cooled lead-shielded containers with crash cages and transported to the processing plant, where they are again placed underwater. At the processing plant the fuel elements are removed from the cladding metal, sheared, and dissolved in nitric acid. Solvent extractions or ion exchange are used to separate uranium and plutonium from the fission products. Radiation into the storage water or into the air poses an obvious potential hazard to the environment. Further, radioactive fission products create a considerable solid wastes problem from the standpoint of perpetual storage.[1] Nearly all the radioactive wastes from the nuclear industry arise from the reprocessing of reactor

fuel. Most of this solid waste is stored underground. Probably the most difficult problem to solve is the release to the atmosphere of ^{85}Kr from fuel reprocessing plants. Because of the inert gas character of Kr and Xe, their removal is a technically difficult task. The ^{85}Kr is a long-lived nuclide that tends to build up in the atmosphere. Several methods are currently under development for the removal of ^{85}Kr from waste gas streams by adsorption, distillation, extraction, or diffusion. These processes may remove as much as 90 percent of the ^{85}Kr that is now being discharged from reprocessing plants.[9]

In general, the mobility of fission products in the environment is a complex phenomenon which is complicated by the fact that several members of a beta decay chain can be translocated because of the mobility of a radioactive parent. Furthermore small particles of radionuclides are often transported by virtue of the reactive energy associated with nuclear decay, and thus do not require externally applied force for dissemination.

9.5 MAJOR POLLUTANT SOURCES

All processes of the uranium industry, mining, milling, refining, fuel element manufacturing and nuclear power generation, are potential sources of radioactive airborne dust.

- Mining and milling processes: Uranium, thorium and their daughter products are sources of radioactivity, but

the main source is gaseous radon and its decay products. As a result of air cleaning and dilution of gases in the atmosphere, the quantity of airborne dust released to the atmosphere is usually very small.

° Refining and element manufacturing processes: Since the majority of daughter products will have been removed earlier, airborne products from the purification steps, consist primarily of dust or fumes of uranium or thorium. These are usually controlled. Similarly the dust released from element manufacturing processes consist essentially of uranium or thorium compounds involved in the process.

° Reactor: Wastes generated by reactor include four gaseous radio-nuclides, ^{3}H, ^{85}Kr, ^{131}I and ^{133}Xe. The radioactive xenon is also present as ^{135}Xe. Although ^{131}I has a short half-life and decays during normal handling and storage, ^{85}Kr and ^{3}H have longer half lives; their buildup in the atmosphere or in water could be a significant hazard when nuclear power production reaches predicted levels

REFERENCES FOR CHAPTER 9

1. Kirk-Othmer. Encyclopedia of Chemical Technology, New York. Wiley and Sons, Inc., 1964.

2. DeCarlo, J. A., and Shortt, C. E., Uranium, In: Minerals Facts and Problems. U.S. Bureau of Mines. 1970.

3. Baroch, C. T., Uranium, In: Minerals Year Book. Vol I-II. Bureau of Mines, 1967.

4. Woodmansee, W. C., Uranium, In: Minerals Year Book. U.S. Bureau of Mines. 1971.

5. Crawford and Paone. Facts Conerning Uranium Exploration and Production. 1956.

6. Clegg and Foley. Uranium Ore Processing. 1958.

7. "Cornell Workshop on Energy and the Environment," sponsored by the National Science Foundation, Committee on Interiors and Insular Affairs, U.S. Senate, 1972.

8. Harrington and Ruehl. Uranium Production Technology. 1959

9. Rivera-Corderu, A., The Nuclear Industry and Air Pollution. Env. Sci. and Tech., 4(5)392, 1970.

° CONVERSION FACTORS °

ENGLISH UNITS TO METRIC UNITS

Multiply	by	To Obtain
Atmosphere	760.0	millimeter of mercury
BTU (British Thermal Unit)	252.0	gram calorie
Cubic foot	28.32	liter
Foot	30.48	centimeter
Gallon (US)	3.785	liter
Grain	0.065	gram
Horsepower	0.7457	kilowatt
Ounce (avoirdupois)	28.35	gram
Ounce (fluid)	29.57	milliliter
Pound	453.6	gram
Ton (long)	1016	kilogram
Ton (short)	907.0	kilogram
Watt	0.0143	kilo calorie/minute

10.0 RECOMMENDATIONS

It was the purpose of this study to assemble data on processes and emissions into a standard format developed by EPA with the goal of identifying processes, which because of their potential for hazardous pollutant emissions, should be the subject of further evaluation. Various literature sources and limited contacts with primarily governmental agencies served as the primary data bases. The majority of the useful information which can be obtained by such an approach is presented in this report. Such an approach, however, has inherent limitations; for example, useful data available from such sources as industrial representatives can be overlooked. In this screening study we have identified the following processes which should be the subject of further evaluation. These processes were selected after qualitatively considering available information on total quantity of material processed, total mass emissions, comparative emission toxicity, particle size distribution, process operating conditions, process growth trends, location relative to population centers and degree of emissions control.

- Sintering (iron and steel)
- Lead sintering
- Zinc roasters
- Copper converters
- Ferroalloy electric furnaces
- Blast furnace (lead)
- Copper ore crushing
- Material handling (iron and steel)
- Reduction cells (aluminum industry)
- Reduction process (titanium industry)
- Nuclear reactor

The rationale for selecting these sources is briefly described below.

Sinter plants (Iron and Steel) - Uncontrolled emissions from the sintering process average approximately 40 pounds of particulate per ton of sinter. Seventy-five percent of the particulate is present in the size range of 1 to 10 μ. Sulfur dioxides as well as volatilized metals are emitted. The overall degree of emissions control is estimated to be only 90%.

Considerable quantities of sinter are produced (approximately 51 million tons in 1967). The overwhelming majority of sinter is produced on-site at steel plants, of which approximately 85% are located within Standard Metropolitan Statistical Areas, (SMSA's).

Sintering (Lead Industry) - The lead sinter process emits (uncontrolled) about 500 pounds of particulates per

ton of lead. Elements present in the particulates include Pb, Sb, Cd, Ge, Se, Te, Tn, Tl, Cl, F, and As. The off-gases also contain substantial quantities of sulfur dioxide and organic vapors. The overall level of control is estimated to be only 85%.

There are about six facilities with operating lead sintering machines (1969 data), all of which are west of the Mississippi. Of the 21 primary lead and zinc smelters, eight are within SMSA's.

Zinc Roasters - Emissions from zinc roasters contain As, Ag, Be, Cd, Cr, Hg, Mg, Mn, Ni, Pb, Sb, Se, Sr, and V as well as significant quantities of SO_2. The overall level of particulate control is reported to be relatively high, but is unverified.

Zinc production is fairly well split between eastern and western United States; the majority of the plants in the eastern U.S., however, are near populated areas.

Copper Converters - About 240 pounds of particulate and 3500 pounds of SO_2 are emitted (uncontrolled) per ton of copper produced. The degree of particulate control is approximately 85 to 90%. Fumes from the converter contain lead, antimony, arsenic, bismuth, selenium, tellurium, zinc, cadmium and thallium.

Of the 19 primary copper smelters, eight are in Arizona. Four smelters are within SMSA's. Except for several in Michigan, New Jersey, and Tennessee, smelting sites are in the western portion of the country from Texas to Washington.

Electric Furnace (Ferroalloy Industry) - Emissions from ferroalloy furnace vary widely in type and quantity depending primarily upon the particular ferroalloy being produced; uncontrolled emissions range from about 40 to 600 lbs/ton of product. The emissions contain significant amounts of potentially hazardous materials. In 1970, overall degree of emissions control was estimated at approximately 50%.

In 1966, there were 51 listed plants producing ferroalloys in 17 states. Ohio led in total production followed by Pennsylvania; these two states account for 35 percent of the plants and about one-half of these are located in SMSA's. Over 2.5 million tons of ferroalloys were produced in electric furnaces.

Blast Furnace (Lead Industry) - About 250 pounds of particulate (uncontrolled) per ton of material charged is emitted. Trace metals present in the particulates emitted and the range of composition are: Cd, 0.01 to 0.1 ppm; Cu, 0.01 to 0.1 ppm, Mg, 1 to 10 ppm; Mn, 0.01 to 1.0 ppm, Ni, 0.01 to 1.0 ppm; Pb, 0.1 to 100 ppm, Sn, 0.01 to 1.0 ppm and V, 0.01 to 0.1 ppm. Recovered fumes, which are sent to cadmium treatment plants, contain Pb, Sb, Se, Te, Cl, F, In, Tl, Zn, Cd and As. Slag formed in the furnace contain the oxides of Fe, Ca, Si, Al, Mg, and Mn. Essentially all blast furnaces in the industry have some kind of control; overall control efficiency is estimated to be only 85 percent, however.

There are approximately six primary lead smelters, all located west of the Mississippi.

Copper Ore Crushing - Approximately 200,000 tons of particulate is emitted per year from crushing operations; this represents nearly 70 percent of the total particulate emissions from the copper industry. Composition of the particulate is the same as that of ore. Free silica in the ore may be appreciable and pose a health hazard. Most of these operations, however, are confined to remote areas.

Material Handling (Iron and Steel Industry) - In 1970, approximately 445,000 tons of particulate was emitted annually from the material handling process in the iron and steel industry. Composition of the emission is essentially the same as the ore. The fugitive dust emissions created by materials handling are a problem in both rural and urban areas.

Reduction Cells (Aluminum Industry) - Hydrogen fluoride is the emission of primary concern. All plants have primary control equipment, but in many cases their operating efficiency is not high enough to be satisfactory. Furthermore, few plants have secondary emissions control (i.e., control of pot-line emissions that escape the hoods). Of the three kinds of cells in the industry, the horizontal-stud Soderberg cells have the highest emission rates. The emissions also contain alumina, tar-pitch distillation products, oxides of sulfur and carbonyl sulfur.

In 1968, there were 24 primary aluminum reduction plants in the United States with a total capacity of approximately 3.5 million tons. One-third of these plants were within SMSA's.

Reduction Process (Titanium Industry) - Atmospheric emissions contain $TiCl_2$ and $MgCl_2$ vapors. The most significant problem however, is the relatively large amounts of solid waste containing metallic chlorides which must either be landfilled or dumped at sea.

Nuclear Reactors - Wastes generated by reactors contain four gaseous radionuclides, ^{131}I, ^{3}H, ^{85}Kr and ^{133}Xe. Many hundreds of additional radioactive fission products may exist as suspended solids. Of particular interest biologically and from a solubility standpoint are ^{137}Cs, ^{134}Cs, and ^{90}Sr because of their ready intake by the body and concentration in the food chain. The rare earth fission products also are biologically mobile enough to be of serious threat.

Wastes from the nuclear reactor present a potentially severe environmental problem. With the expected growth in nuclear power generation, these sources could be of overwhelming importance.

The next study phase should consist of obtaining detailed information for each of these processes on the emission characteristics and the approximate degree of emissions control. This phase would entail several plant inspections of each process, and discussions with appropriate personnel from the industry, their design/process engineers and emission control equipment manufacturers. Emission source tests may also be required for several processes to obtain necessary data on emission particle size distribution and composition.

A consistent quantitative procedure of ranking these processes should then be used to identify the most significant sources. This procedure should encompass the qualitative factors, listed above, which were used in the initial selection. For example, such a procedure might include determination of the "area of significant pollution impact;" such an area could be estimated by considering probable distance of significant pollutant transport coupled with probable health impact. Health impact determinations should be based upon consideration of the particle size distribution and particle composition. Such a study should be a cooperative effort with EPA's Health Effects Research Laboratory. Once the "significant impact area" is determined, the population living or working within such areas could be determined and an emissions control priority established for all processes, not only for the significant sources identified by this study but for those identified in parallel studies.

APPENDIX A

METAL PRODUCTION AND CONSUMPTION STATISTICS

(1971)

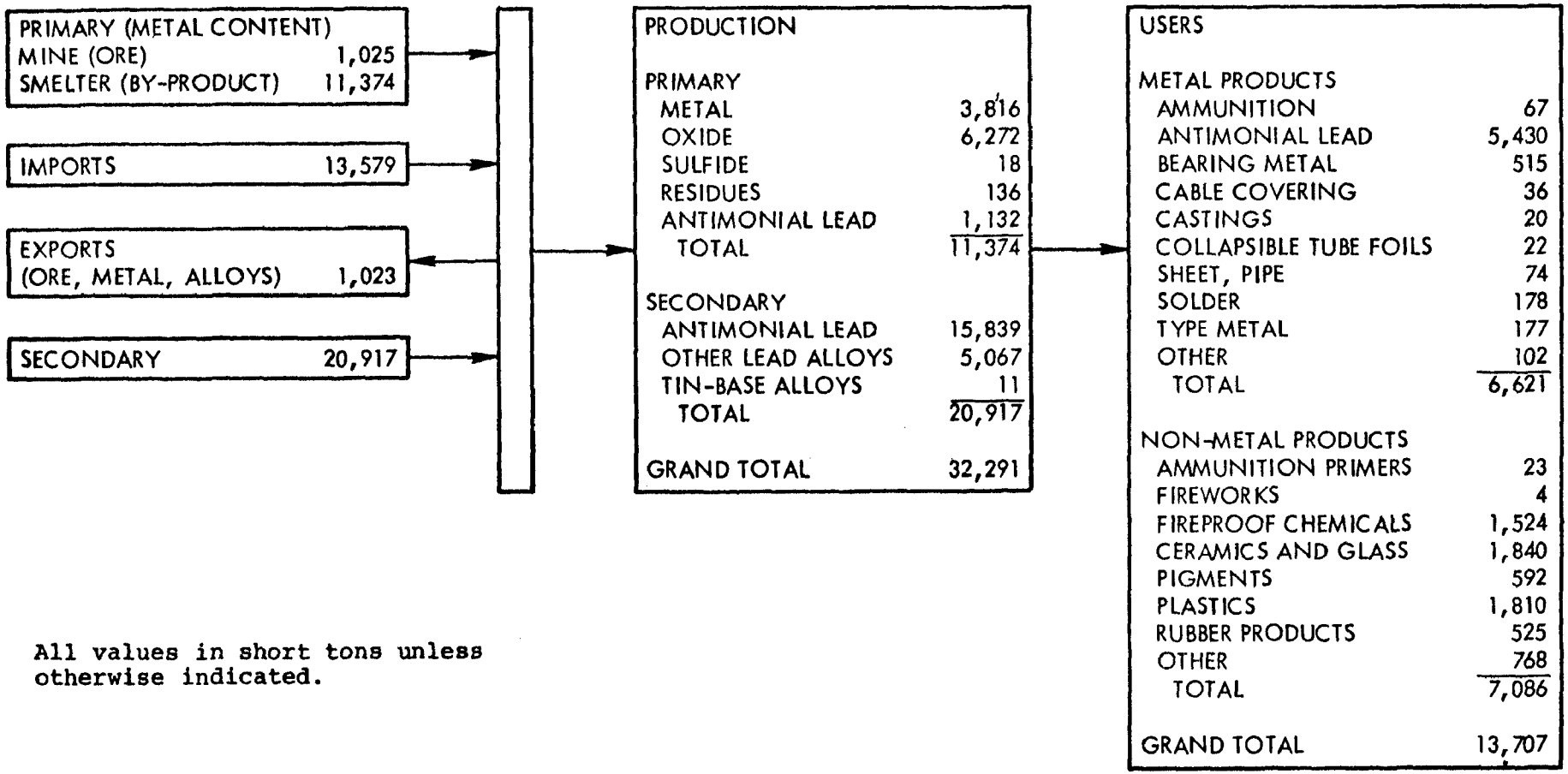

All values in short tons unless otherwise indicated.

Figure A-1. Antimony production and consumption statistics (1971)

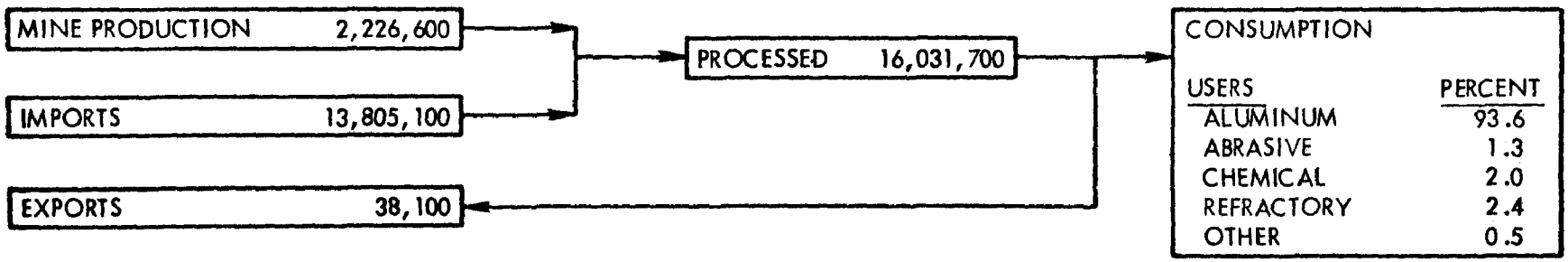

All values in short tons unless otherwise indicated.

Figure A-2 Bauxite (aluminum ore) production and consumption statistics (1971).

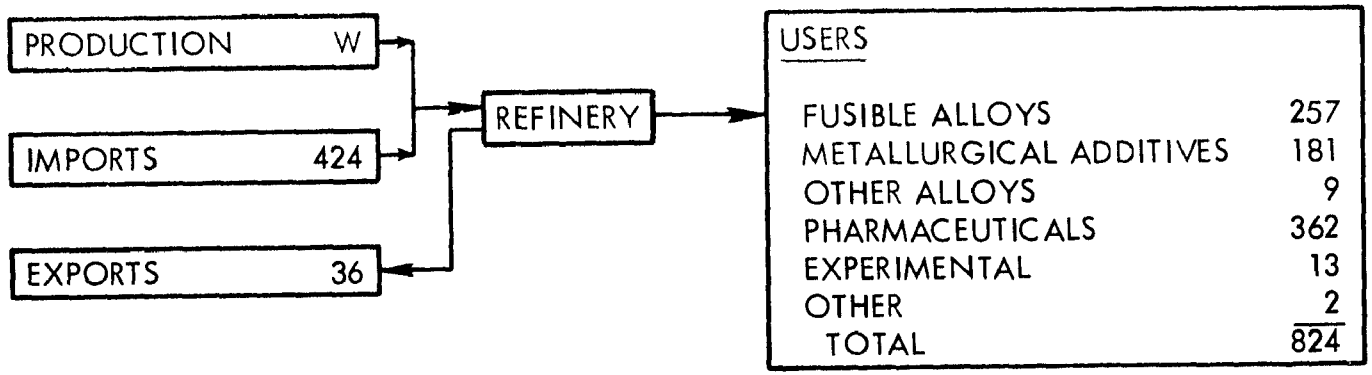

All values in short tons unless otherwise indicated.

Figure A-3 Bismuth production and consumption statistics (1971).

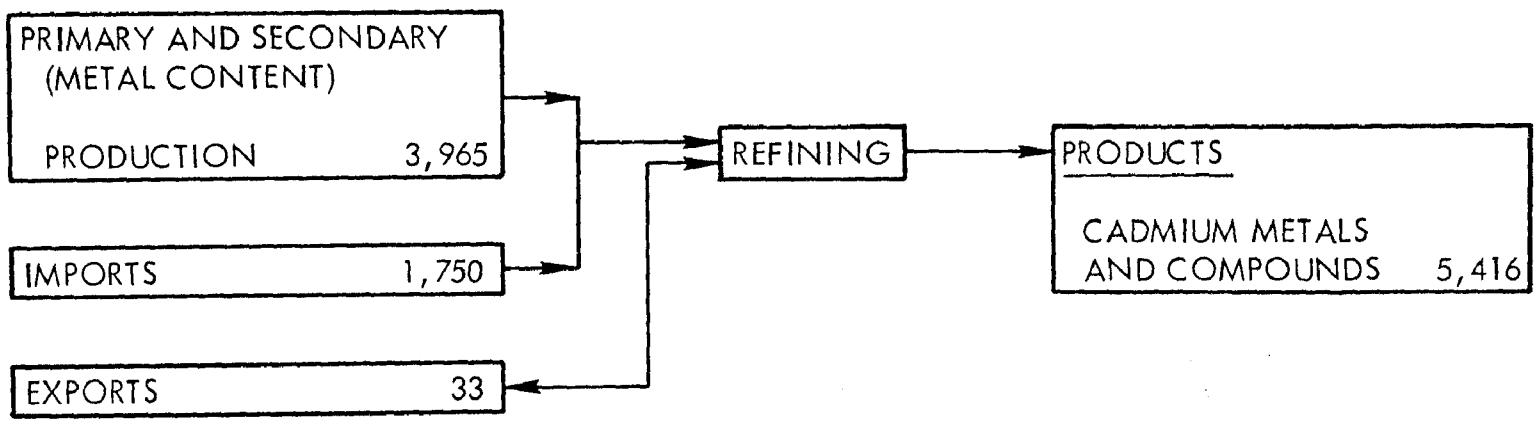

All values in short tons unless otherwise indicated.

Figure A-4 Cadmium production and consumption statistics (1971).

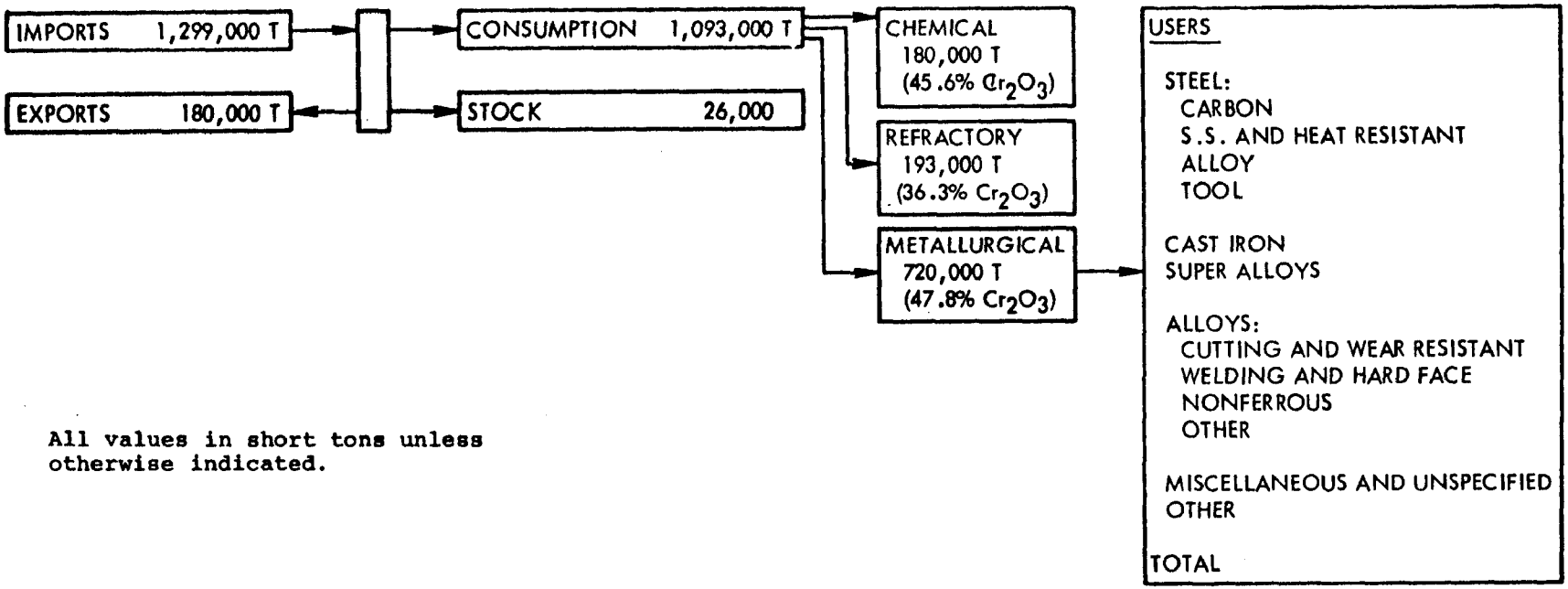

All values in short tons unless otherwise indicated.

Figure A-5 Chromite production and consumption statistics (1971).

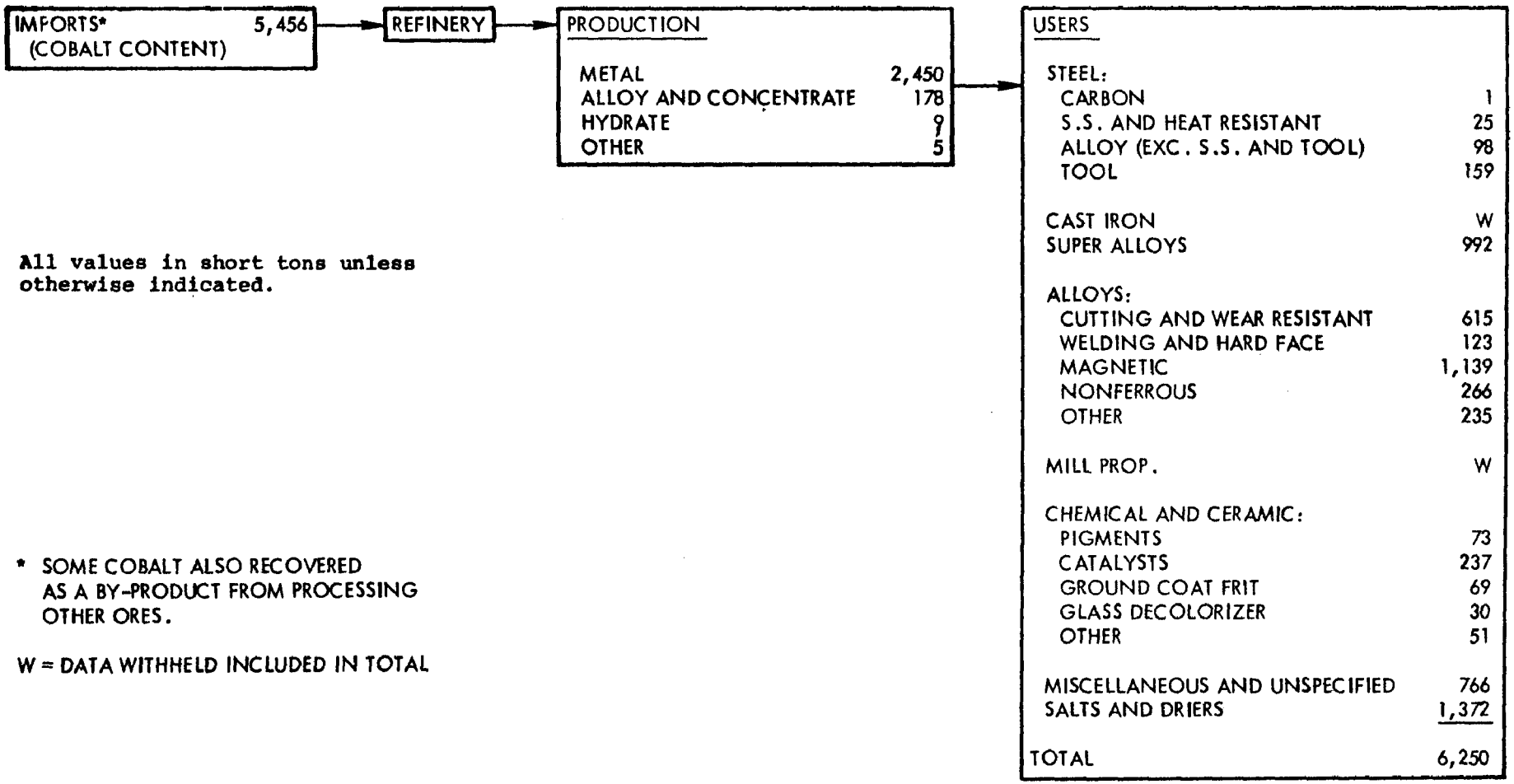

Figure A-6 Cobalt production and consumption statistics (1971).

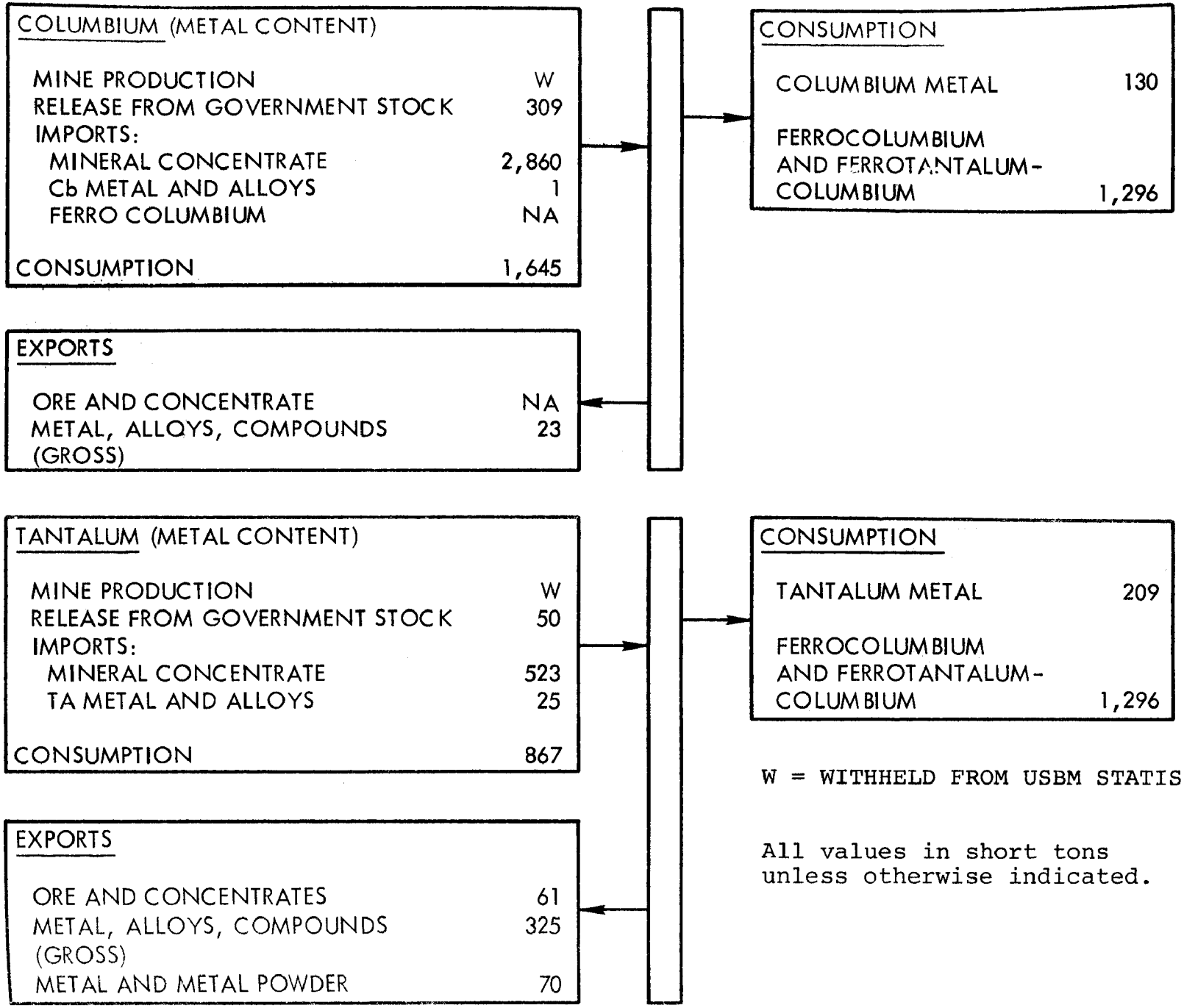

W = WITHHELD FROM USBM STATISTICS

All values in short tons unless otherwise indicated.

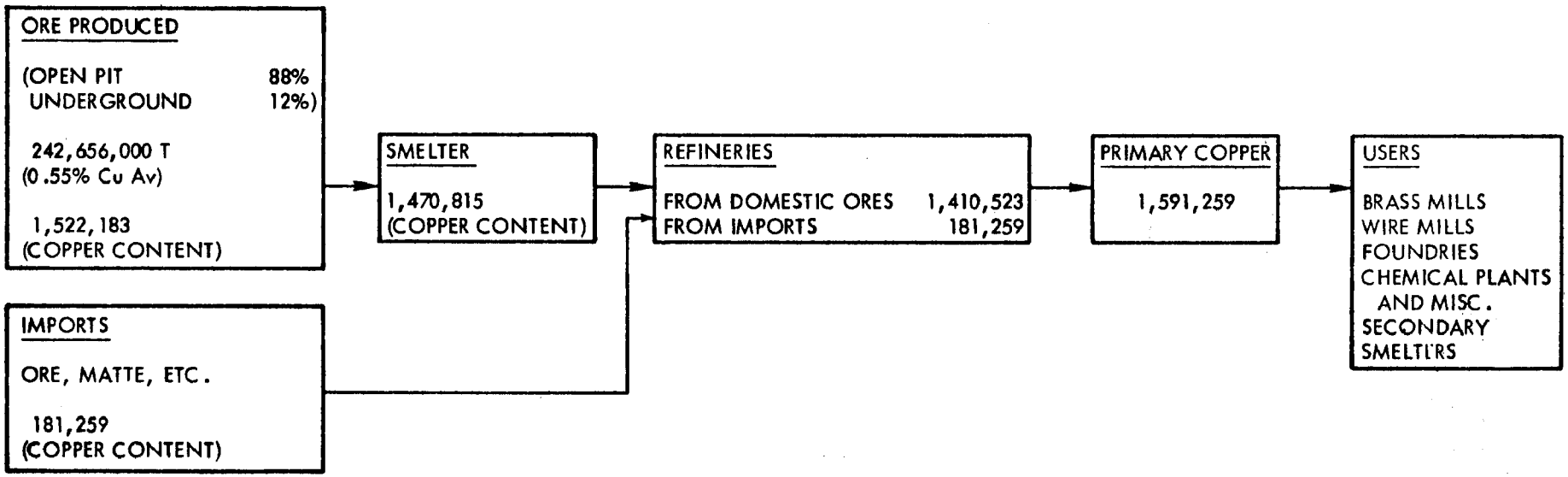

* ALL VALUES IN SHORT TONS UNLESS OTHERWISE INDICATED.

Figure A-8 Copper production and consumption statistics (1971).

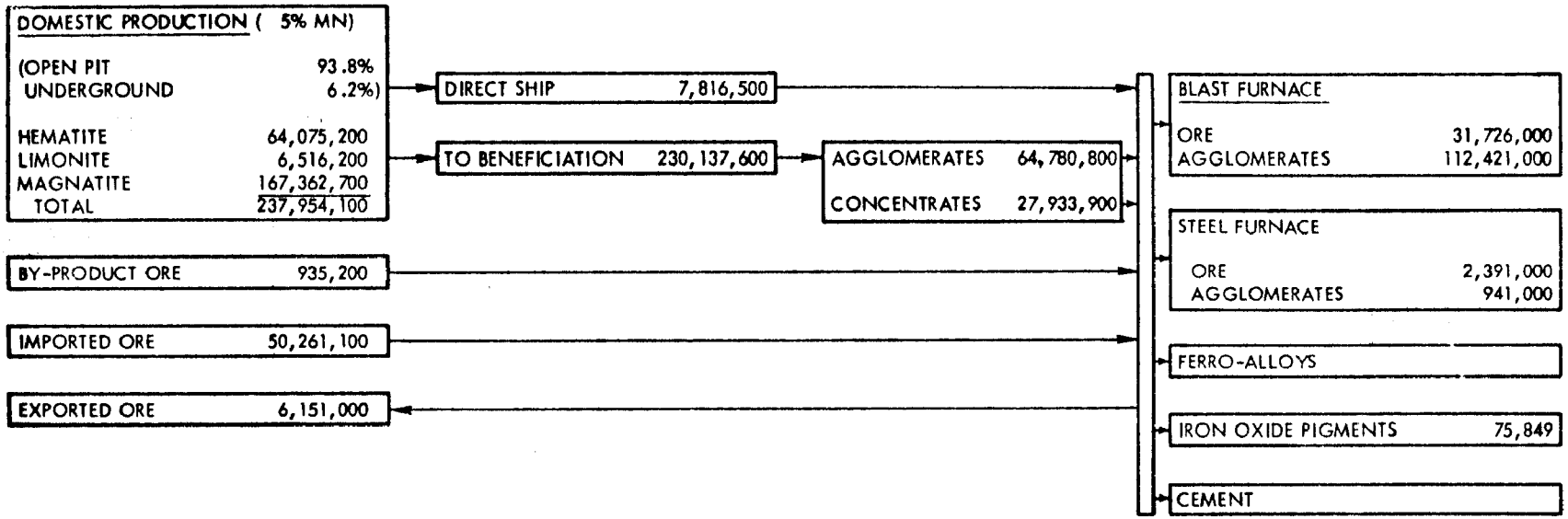

* ALL VALUES IN SHORT TONS UNLESS OTHERWISE INDICATED.

Figure A-9 Iron production and consumption statistics (1970).

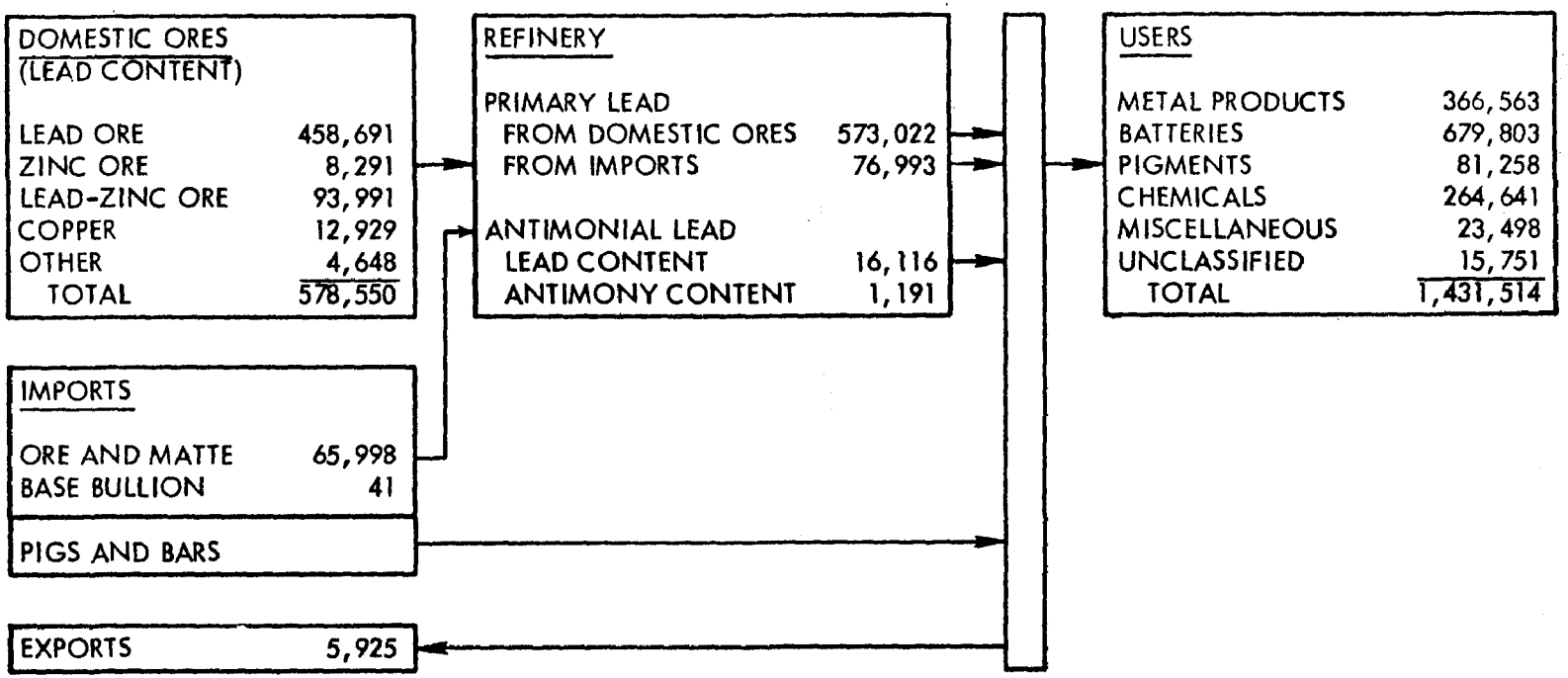

* ALL VALUES IN SHORT TONS UNLESS OTHERWISE INDICATED.

Figure A-10 Lead production and consumption statistics (1971).

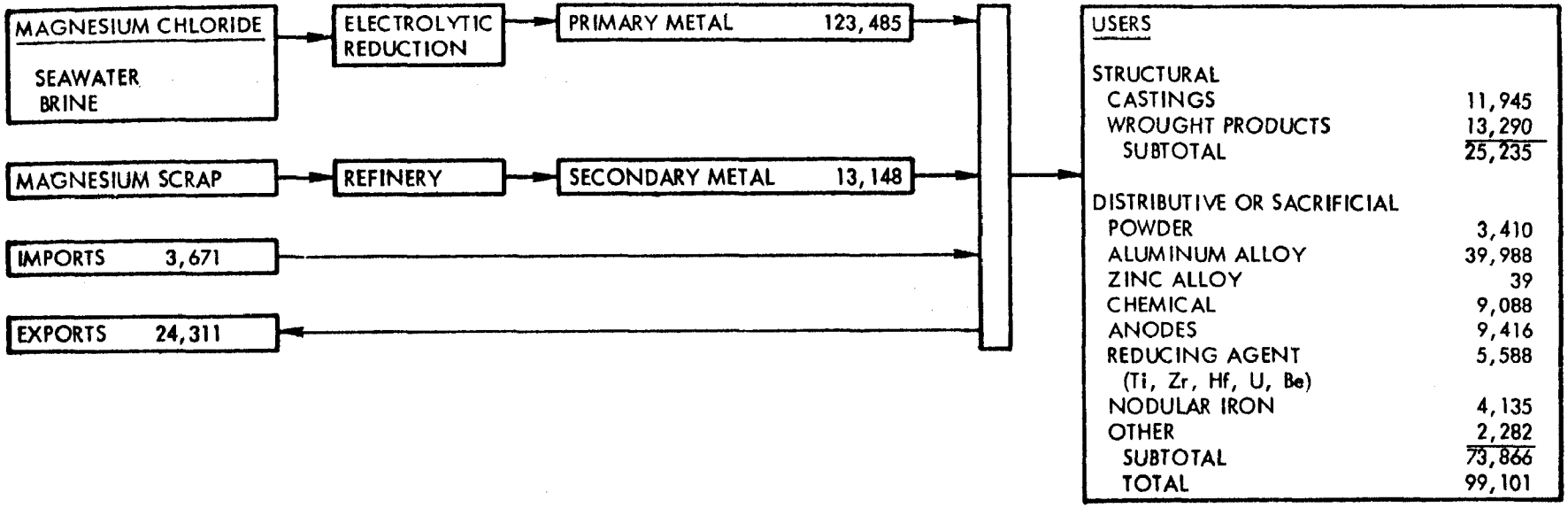

* ALL VALUES IN SHORT TONS UNLESS OTHERWISE INDICATED.

Figure A-11 Magnesium production and consumption statistics (1971).

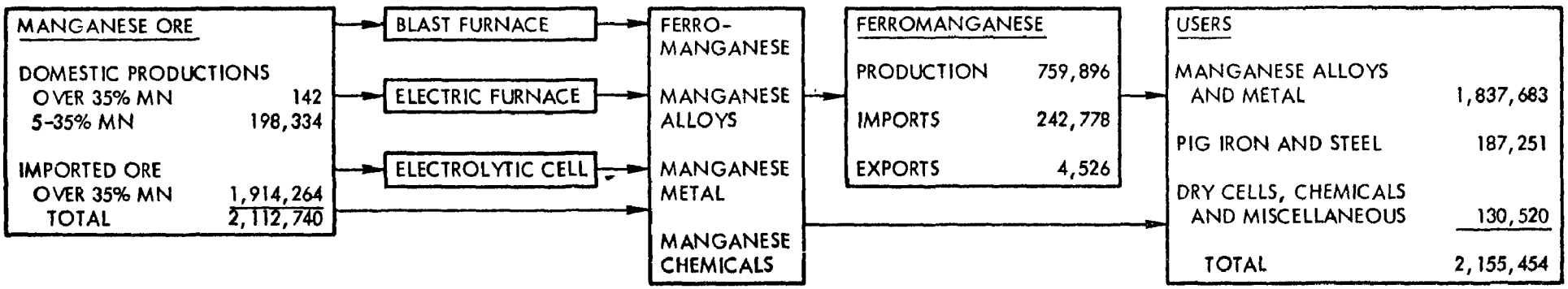

* ALL VALUES IN SHORT TONS UNLESS OTHERWISE INDICATED.

Figure A-12 Manganese production and consumption (1971).

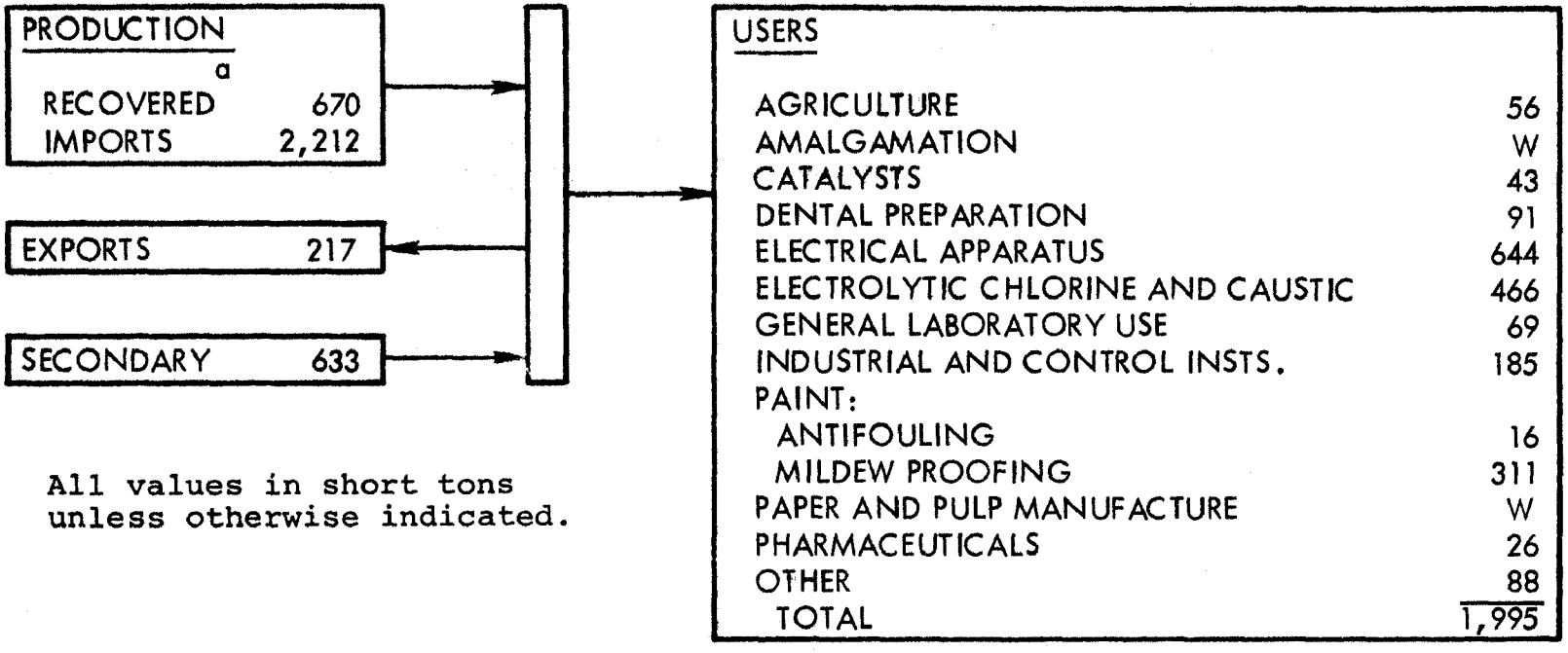

All values in short tons unless otherwise indicated.

[a] RECOVERED FROM ORE MINED PRINCIPALLY FOR MERCURY CONTENT

W = WITHHELD

Figure A-13 Mercury production and consumption statistics (1971).

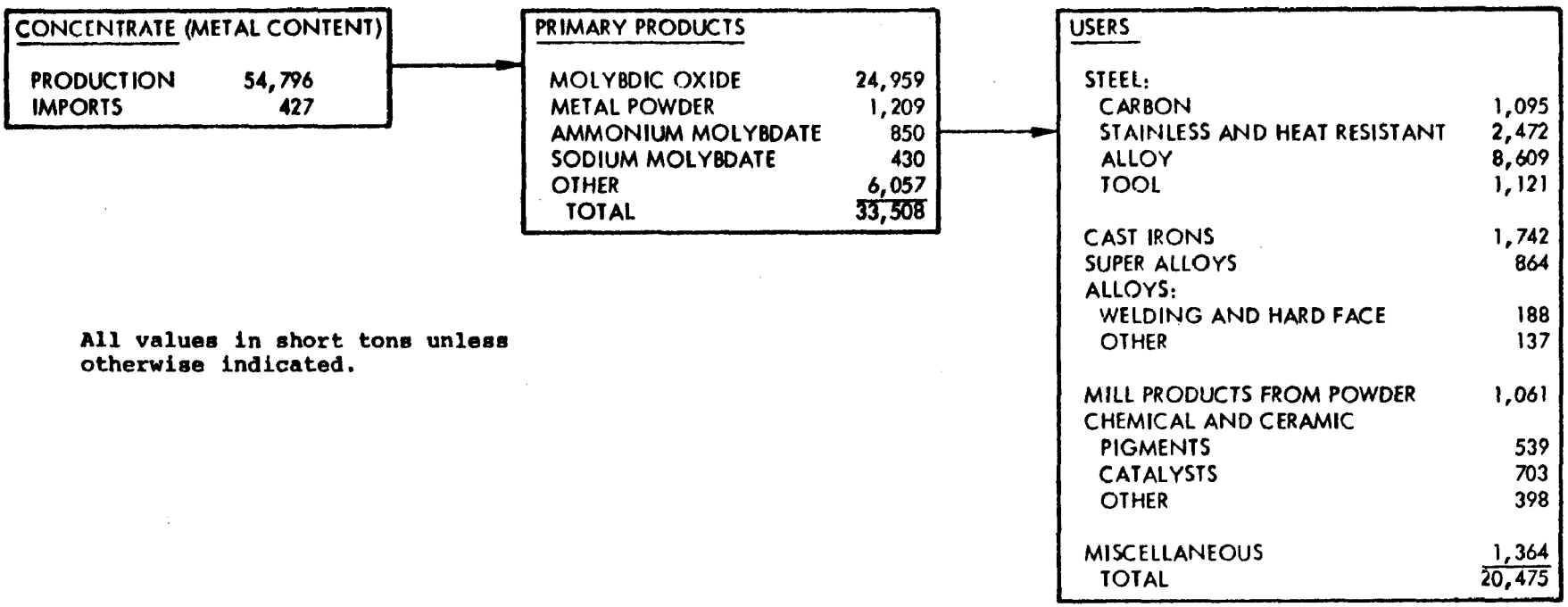

All values in short tons unless otherwise indicated.

Figure A-14 Molybdenum production and consumption statistics (1971).

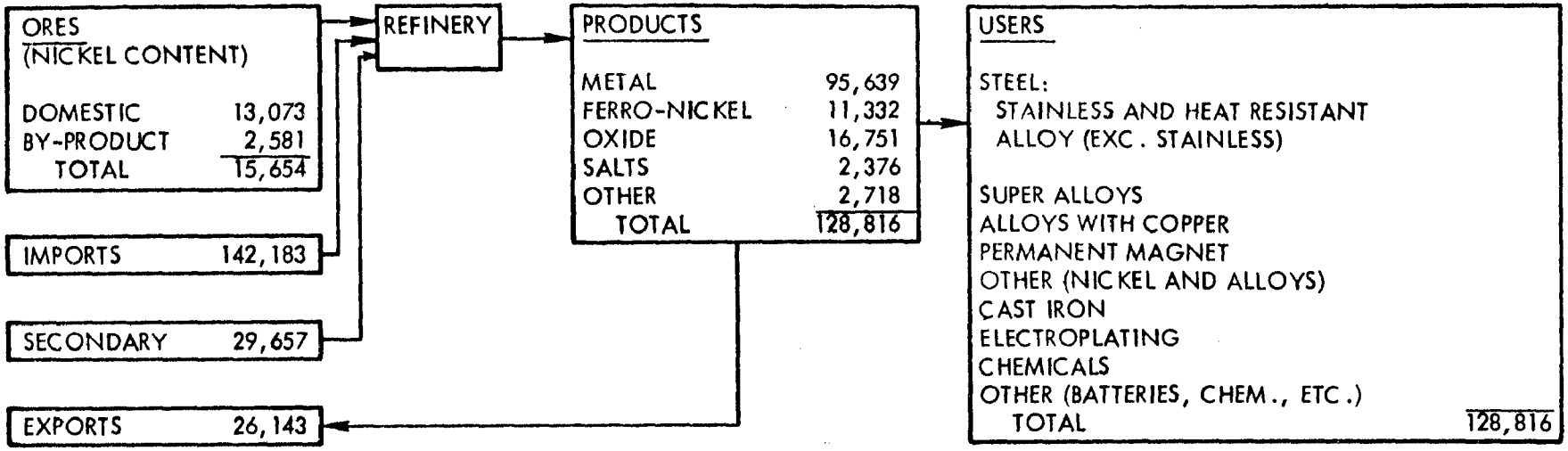

* ALL VALUES IN SHORT TONS UNLESS OTHERWISE INDICATED.

Figure A-15 Nickel production and consumption statistics (1971).

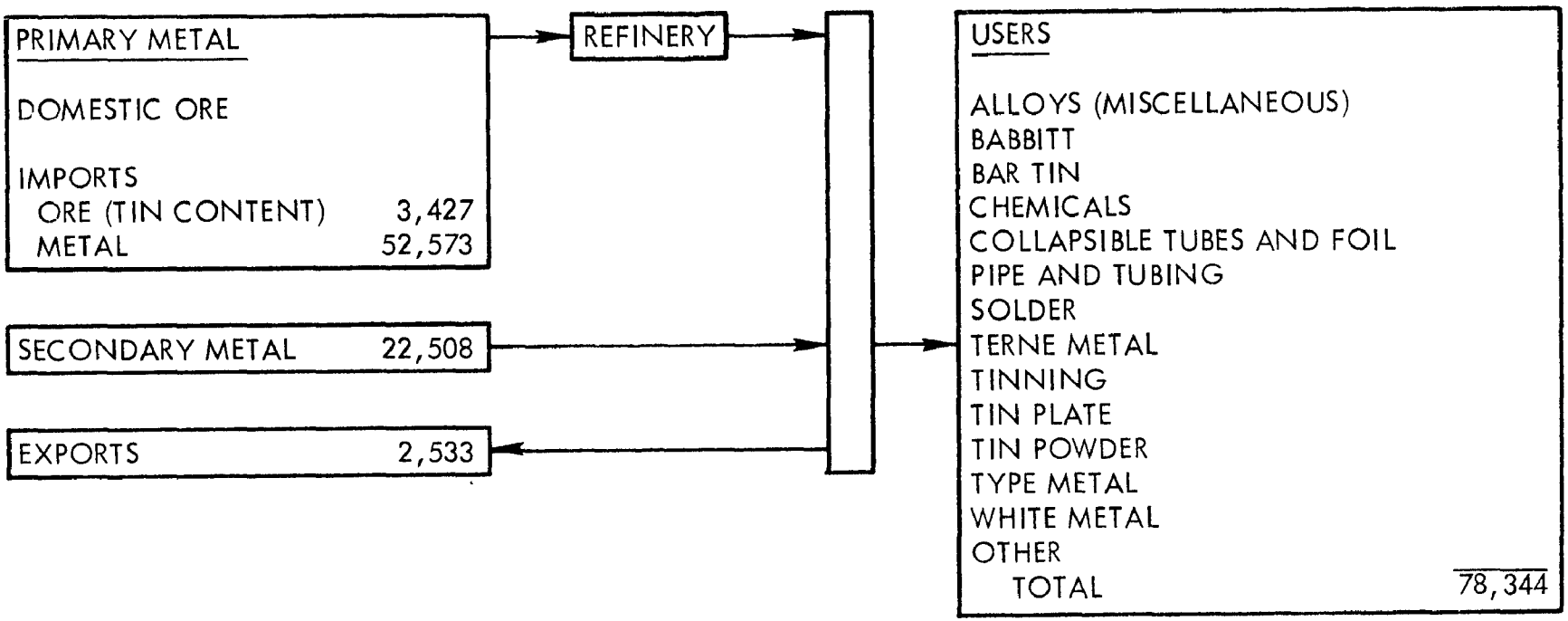

* ALL VALUES IN SHORT TONS UNLESS OTHERWISE INDICATED.

Figure A-16 Tin production and consumption statistics (1971).

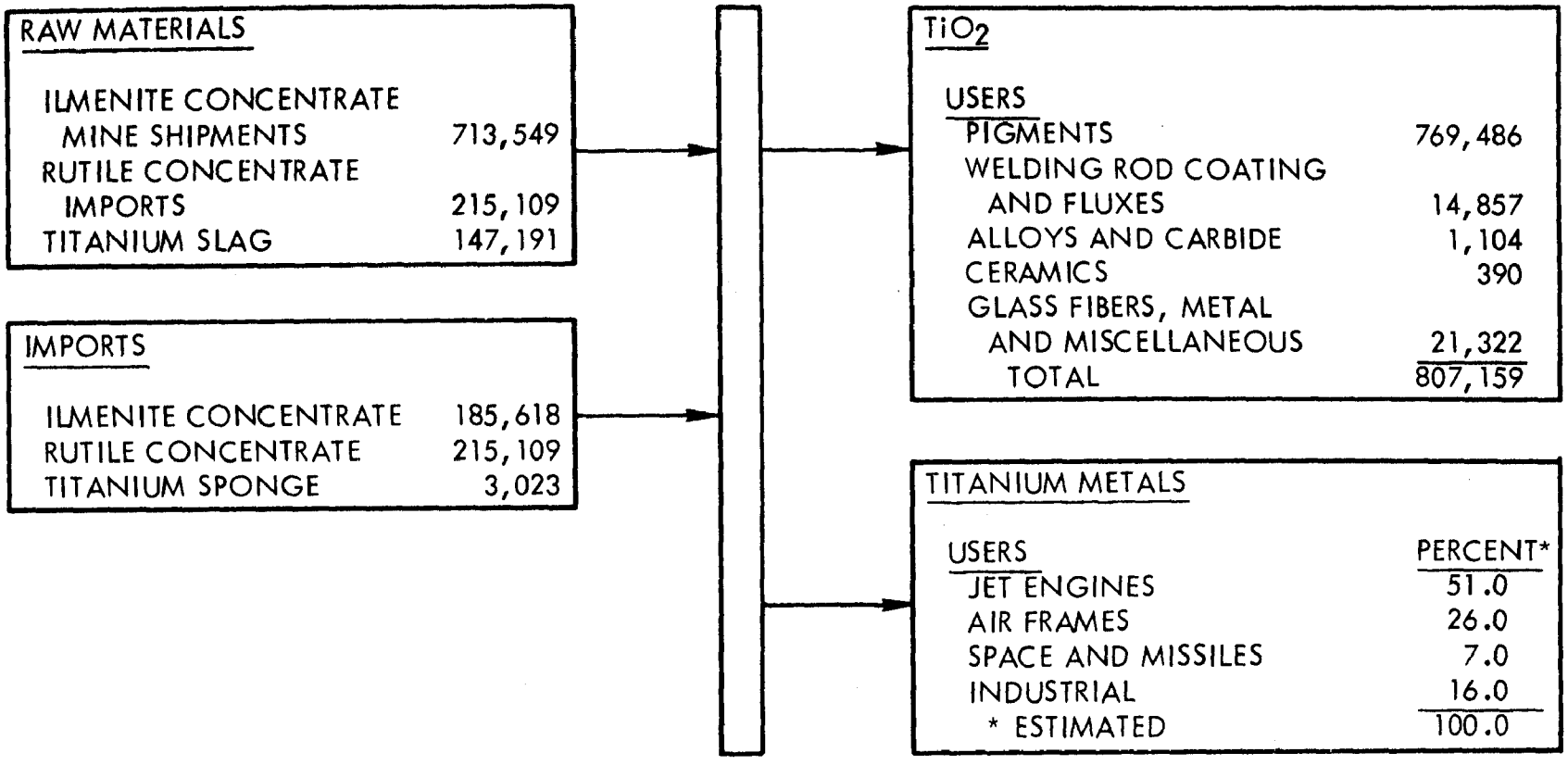

All values in short tons
unless otherwise indicated.

Figure A-17 Titanium production and consumption statistics (1971).

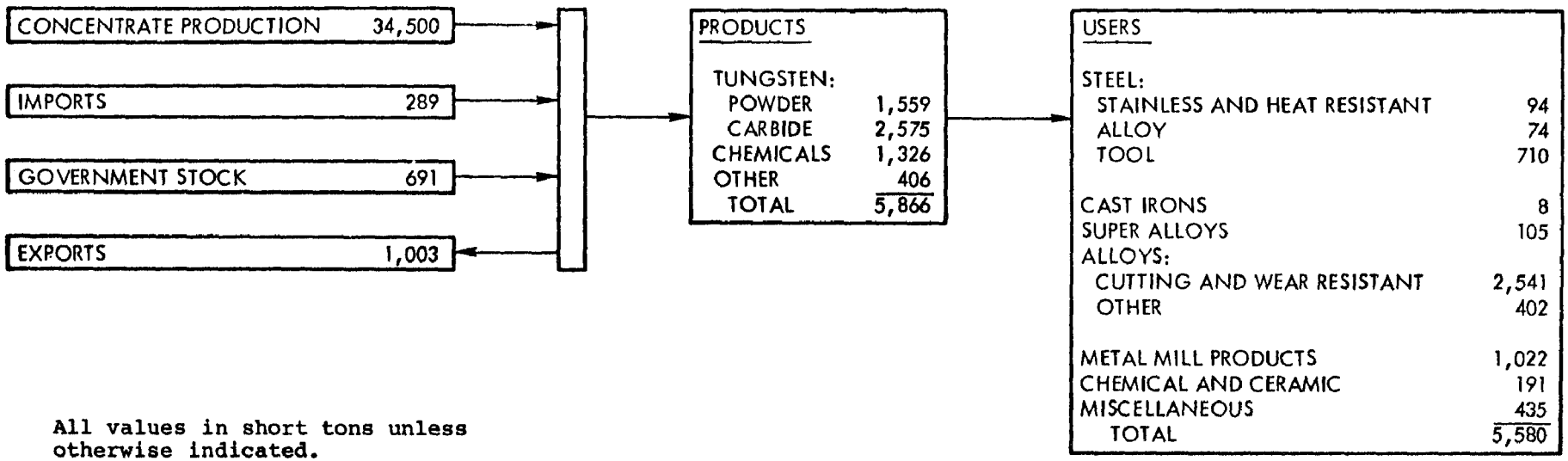

All values in short tons unless otherwise indicated.

Figure A-18 Tungsten production and consumption statistics (1971).

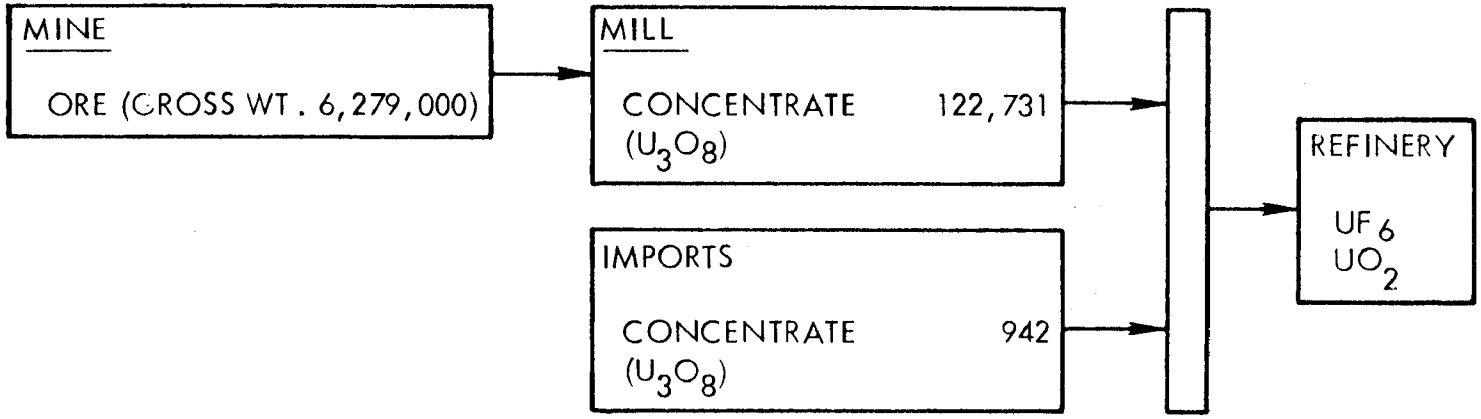

All values in short tons
unless otherwise indicated.

Figure 19 Uranium production and consumption statistics (1971).

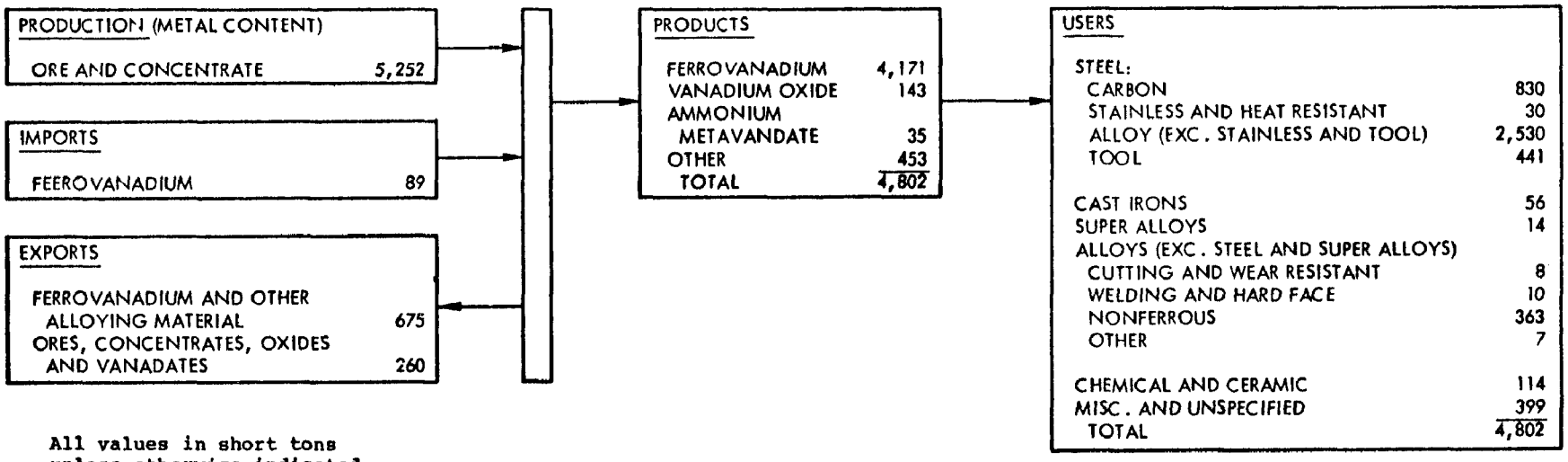

All values in short tons unless otherwise indicated.

Figure A-20 Vanadium production and consumption statistics (1971).

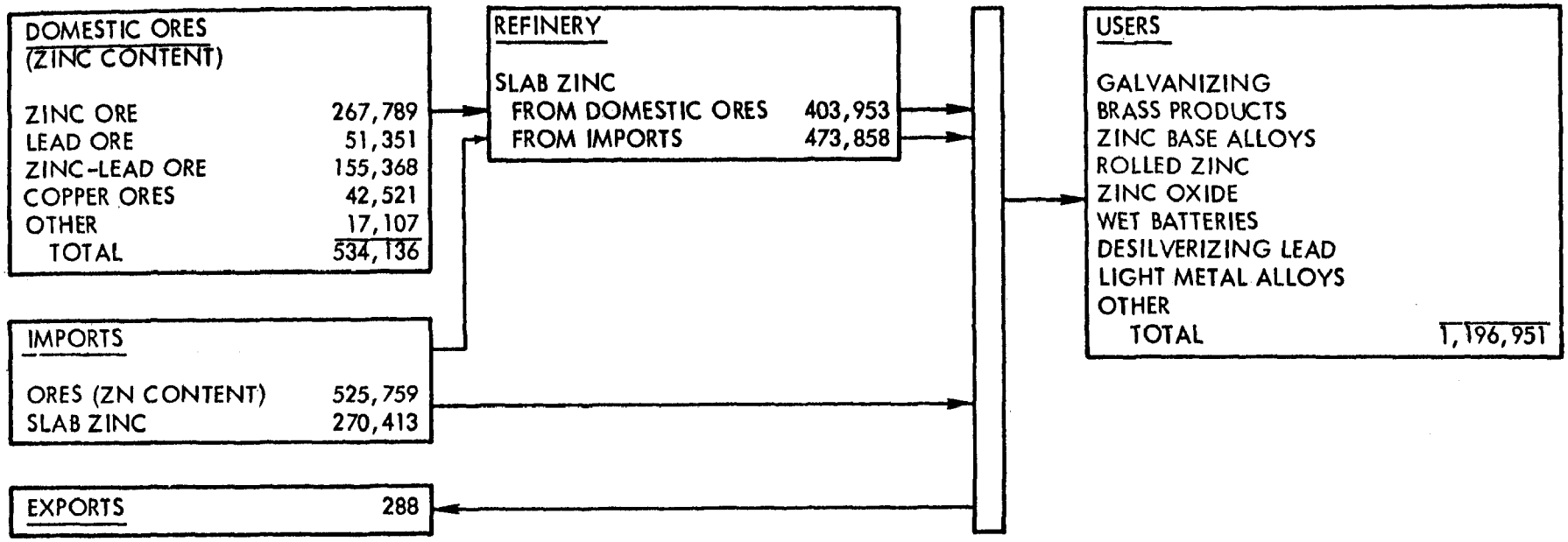

* ALL VALUES IN SHORT TONS UNLESS OTHERWISE INDICATED.

Figure A-21 Zinc production and consumption statistics (1971).

APPENDIX B

IRON ORE MINING AND PRODUCTION STATISTICS

Table B-1 Economic Facts of Life Place On-Going Emphasis on Pellets as U.S. Natural Ore Operations Continue Phase-O

...ration/Location	%	Ownership	Startup	Mining Method	Drilling Method	Haulage Method	Ore/Waste (tpd)	Ore Mined (tpd)	Ore Minerals	Ore Grade	Concentrate (tpd)	Concentrate Grade	Agglomeration	Equipment Used	Pellet Capacity (tpd)	Sinter Capacity (tpd)	1972 Production (tons)	Grade Final Product	Shipping Destination	Shipping Method	Expansion Plans
Eagle Mountain mine Eagle Mountain, Calif.	100%	Kaiser Steel	1948	open pit	rotary, percussion	truck	130,000	28,000	magnetite, hematite	35%	20,000	63.5%	pellets	traveling grate	8,000	—	2,000,000[1]	63%	Fontana, Ca.	rail	none
Empire mine Palmer, Mich.	40% 25% 20% 15%	Inland Steel McLouth Steel Cleveland-Cliffs Int'l. Harvester	1963	open pit	rotary	truck	55,050	27,830	magnetite	31%	10,720	n.a.	pellets	grate kiln	9,940	—	3,570,000	64%	lower lake	rail, boat	yes[2]
Republic mine[3] Republic, Mich.		Cleveland-Cliffs Jones & Laughlin Int'l. Harvester Wheeling Pittsburgh	1956	open pit	rotary, jet piercing	truck	50,600	21,600	specularite	38%	10,800	n.a.	pellets	grate kiln	7,500	—	2,650,000	64.6%	lower lake	rail, boat	none
Mather-O.I.P.-Pioneer[4] Negaunee, Mich.		—	1965[5]	underground	n.a.	rail	n.a.	6,430	hematite	60.1%	n.a.	n.a.	?	grate kiln	4,650	—	1,510,000 pellets, 321,000 coarse ore	61.8%[6] 56.2%[7]	lower lake	rail, boat	none
Humboldt Mining Co.[8] Humboldt, Mich.	50% 50%	Cleveland-Cliffs Ford Motor	1960[9]	open pit	—	—	—	—	—	—	—	—	pellets	grate kiln	2,840	—	930,000	64.6%	lower lake	rail, boat	none
Tilden Mine-Project Ishpeming, Mich.	30% 27% 20% 10% 8% 5%	Algoma Steel Jones & Laughlin Cleveland-Cliffs Stelco Wheeling-Pittsburgh Sharon Steel	1974	open pit	rotary	truck	—	28,840	hematite	38%	13,300	—	pellets	grate kiln	11,780	—	—	65.5%	Canada, lower lake	rail, boat	—
Groveland mine Randville, Mich	100%	Hanna Mining	1963	open pit	rotary	truck	32,000	14,250	magnetite, hematite	35.5%	5,730	64.0%	pellets	traveling grate	5,550	—	2,000,000	63.2%	n.a.	rail, boat	none
Sherwood mine Iron River, Mich.	100%	Inland Steel	n.a.	underground	percussion	rail, conveyor			geothite, hematite	54.5%	—	—	sinter[10]	—	—	—	380,000	—	East Chicago, Ind.	rail, boat	none
Mesaba Cliffs Coleraine, Minn.	32% 20% 18.4% 16% 13.6%	Jones & Laughlin Detroit Steel Cleveland-Cliffs Wheeling Pittsburgh National Steel	n.a.	open pit	rotary	truck	n.a.	29,400	hematite	36%	8,100	—	—	—	—	—	1,000,000	56%	lower lake	rail, boat	none
...Mining Co. ...oyt Lakes, Minn.	45% 35% 10% 10%	Bethlehem Steel Youngstown S & T Stelco Interlake Pickands Mather	1957	open pit	rotary, jet piercing	truck, rail	53,900 (waste)	85,158	magnetite	22%	29,613	66.35%	pellets	shaft furnaces	28,222	—	9,972,060	64.4%	lake ports	rail, boat	none
Eveleth Taconite Co. Forbes, Minn.	85% 15%	Ford Motor Oglebay Norton	1965	open pit	jet piercing	truck, rail	30,000	24,000	magnetite	23%	8,000	67.2%	pellets	grate kiln	6,400	—	2,141,233	65.3%	Dearborn, Mich., other ports	rail, boat	Yes[11]
Butler Taconite Cooley, Minn.		Inland Steel Hanna Mining Wheeling-Pittsburgh	1967	open pit	rotary	truck	35,200	23,400	magnetite	31.21%	7,647	68.0%	pellets	grate kiln	7,647	—	2,269,854	66.2%	lake ports	rail, boat	none
National Steel Pellet Plant Keewatin, Minn	85% 15%	National Steel Hanna Mining	1967	open pit	rotary	truck	37,000	24,000	magnetite	31.7%	7,365	67.6%	pellets	grate kiln	7,647	—	2,411,216	65.6%	Nat'l. Steel, open market	rail, boat	none
Pierce mine Hibbing, Minn		Hanna Mining National Steel	1959	open pit	rotary	truck	n.a.	n.a.	magnetite, hematite	45-50%	15,000	52.7%		—	—		1,100,000[12]	52.72%	Nat'l. Steel	rail, boat	none
Hill Annex mine Calumet, Mich.	100%	Jones & Laughlin	1917	open pit	rotary, percussion	truck, rail	12,000 (waste)	21,200[13]	hematite, limonite, goethite	33.39%	7,513	60.47%	—	—	—	—	849,000	60.47%	J & L steel mills	rail, boat	none
Lind Greenway mine Grand Rapids, Minn.	100%	Jones & Laughlin	1960	open pit	percussion	truck	18,000	19,300[13]	hematite, limonite, goethite	35.76%	5,326	58.54%	—	—	—	—	612,000	58.54%	J & L steel mills	rail, boat	none
McKinley mine McKinley, Minn.	100%	Jones & Laughlin	1958	open pit	rotary, percussion	truck	18,000	26,700[13]	hematite, limonite, goethite	37.7%	19,000	61.75%	—	—	—	—	1,395,000	61.75%	J & L steel mills	rail, boat	none
Reserve Mining Co. Babbitt, Minn Silver Bay, Minn.[14]	50% 50%	Armco Steel Republic Steel	1955	open pit	jet piercing	truck, rail, conveyor[15]	103,000	88,000	magnetite	24%	29,000	64%	pellets	traveling grate	30,000	—	9,042,632	61%	Armco, Republic	rail, boat	none
Arcturus mine[16] Marble, Minn.	100%	U.S. Steel	n.a.	open pit	rotary	truck, conveyor	n.a.	n.a.	hematite	—	—	—	—	—	—	—	—	—	—	—	none
Plummer mine Coleraine, Minn.	100%	U.S. Steel	n.a.	open pit	rotary	truck, conveyor	n.a.	n.a.	hematite	n.a.	n.a.	n.a.	—	—	—	—	1,468,948	59.9%	lower lake steel mills	rail, boat	none
Minntac Mountain Iron, Minn.	100%	U.S. Steel	1967	open pit	rotary	truck, rail	100,000		magnetite		100,000		pellets	grate kiln	34,250	—	8,545,779	65.13%	lower lake	rail, boat	yes[17]
...ichleau mine ...irginia, Minn.	100%	U.S. Steel	1943	open pit	rotary	truck, rail	n.a.	n.a.	hematite, limonite	n.a.	n.a.	n.a.	—	—	—	—	3,156,572	58.17%	lower lake	rail, boat	none
Sherman mine Chisholm, Minn.	100%	U.S. Steel	1948	open pit	rotary	truck, rail	n.a.	n.a.	hematite, limonite	n.a.	n.a.	n.a.	—	—	—	—	2,658,019	59.18%	lower lake	rail, boat	none
Stephens mine Aurora, Minn.	100%	U.S. Steel	1957	open pit	rotary	truck	n.a.	n.a.		n.a.	n.a.	n.a.	—	—	—		968,121	58.18%	lower lake	rail, boat	none

Table B-1 (continued).

Economic Facts of Life Place On-Going Emphasis on Pellets as U.S. Natural Ore Operations Continue Phase-O

Operation/Location	%	Ownership	Startup	Mining Method	Drilling Method	Haulage Method	Ore/ Waste (tpd)	Ore Mined (tpd)	Ore Minerals	Ore Grade	Concentrate (tpd)	Concentrate Grade	Agglomeration	Equipment Used	Pellet Capacity (tpd)	Sinter Capacity (tpd)	1972 Production (tons)	Grade Final Product	Shipping Destination	Shipping Method	Expansion Plans
Pilot Knob Pellet Co. Pilot Knob, Mo.	50% 50%	Granite City Henna Mining	1968	underground	percussion	truck, conveyor, hoist	7,200	3,000	magnetite	35.3%	3,000 —	65.2%	pellets	traveling grate	3,000	—	970,000	63.4%	Granite City	rail	none
Meramec Mining Co. Sullivan, Mo.	50% 50%	Bethlehem Steel St. Joe Minerals	1964	underground	percussion	rail, conveyor, load-haul-dump	10,725	10,600	magnetite, apatite	49.1% (mag Fe)	8,500	67.6%	pellets	shaft furnaces	6,600	—	1,880,524	67.0%	various cities in U.S.	rail, truck	none
New York Ore division Star Lake, N.Y.	100%	Jones & Laughlin	n.a.	open pit	rotary, percussion	truck	12,300	10,000	martite, magnetite	23%	10,000	67%	sinter	—	—	3,000	825,656	66%	J & L mills	rail	none
Grace mine Morgantown, Pa.	100%	Bethlehem Steel	1958	underground	percussion	conveyor	8,000	6,300	magnetite, pyrite, chalcopyrite	40-42%	4,600	65.5-66.5%	pellets	shaft furnaces	6,600	—	1,132,127	65.5-66.5%	Bethlehem plant	rail	none
Lone Star Steel Co. Lone Star, Texas	100%	Lone Star Steel	1947	open pit	none[18]	truck, rail	9,010 (waste)	13,620	limonite, siderite	27.84%	3,707	42.93%	sinter	—	—	2,187	519,330	50.58%	Lone Star steel mill	rail	none
Comstock mine Cedar City, Utah	100%	CF&I Steel	1953	open pit	rotary	truck	12,800	4,200	magnetite, hematite	53.1%	n.a.	n.a.	—	—	—	—	929,236	53.1%	Pueblo, Colo.	rail	none
Desert Mound mine Cedar City, Utah	100%	U.S. Steel	1951	open pit	rotary	truck	4,000	1,500	—	60%	—	—	—	—	—	—	530,000	—	Provo, Utah	rail	none
Iron Springs mine Cedar City, Utah	—	Utah Int'l.	1943	open pit	rotary	truck	variable	3,200	magnetite, hematite	30-50%	4,000	61%	—	—	—	—	500,000	58%	Provo, Utah	rail	none
Black River Falls mine Black River Falls, Wis.		Inland Steel	1969	open pit	rotary	truck	n.a.	n.a.	magnetite	35%	2,300	65.5%	pellets	straight grate	2,300	—	887,000	65%	East Chicago, Ind.	rail	none
Sunrise mine Sunrise, Wyo.	100%	CF&I Steel	1900	open pit	percussion	rail	3,500	2,200	hematite	42%	2,500	51%	—	—	—	—	541,745	51%	Pueblo, Colo.	rail	none
[illegible] Ore Operations Lander, Wyo.	100%	U.S. Steel	1962	open pit	rotary	rail	32,000	13,400	n.a.	26%	5,000	64.2%	pellets	grate kiln	5,000	—	1,700,000	62.4%	Provo, Utah	rail	none

[18] Dragline employed.

APPENDIX C

PRODUCTION STATISTICS OF FERROALLOYS

Table C-1 FERROALLOYS PRODUCED AND SHIPPED FROM FURNACES IN THE UNITES STATES (1971)

Alloy	Gross weight (short tons)	Alloy element continued (average percent)
Ferromanganese	759,896	78.6
Silicomanganese	164,682	66.0
Ferrosilicon	687,166	68.3
Other chromiums	107,493	44.0
Ferrotitanium	3,363	28.2
Ferrophosphorus	101,353	24.0
Ferrocolumbium	830	61.4
Others include Alsifer, ferroboron, ferronickel, ferromolybdenum, ferrotungsten, ferro vanadium, Simanal, Spiegelsen, Zirconium-ferrosilicon, ferro silicon-zirocoonium and other miscellaneous ferroalloys.	86,329	44.1
Total	2,331,055	62.6

Table C-2 PRODUCERS OF FERROALLOYS IN THE UNITED STATES IN 1971

Producer	Plant location	Product [1]	Type of furnace
Agrico Chemical Co.	Pierce, Fla	FeP	Electric.
Airco Alloys & Carbide	Calvert City, Ky Charleston, S.C Mobile, Ala Niagara Falls, N.Y	FeCr, FeCrSi, FeMn, FeSi, SiMn, Silvery iron.	Do.
Alabama Metallurgical Corp	Selma, Ala	FeSi	Do.
Bethlehem Steel Co	Johnstown, Pa	FeMn	Blast.
Chromium Mining & Smelting Co.	Woodstock, Tenn	FeMn, SiMn, FeCr, FeSi, FeCrSi.	Electric.
Climax Molybdenum Co	Langeloth, Pa	FeMo	Aluminothermic.
Diamond Shamrock Corp	Kingwood, W. Va	FeMn	Electric.
FMC Corp	Pocatello, Idaho	FeP	Do.
Foote Mineral Co.	Cambridge, Ohio Graham, W. Va Keokuk, Iowa Vancoram, Ohio Wenatchee, Wash	FeB, FeCb, FeTi, FeV, FeCr, FeCrSi, FeSi, Silvery iron, other.[2]	Do.
Hanna Furnace Corp	Buffalo, N.Y	Silvery iron	Blast.
Hanna Nickel Smelting Co	Riddle, Oreg	FeNi	Electric.
Hooker Chemical Corp	Columbia, Tenn	FeP	Do.
Interlake Steel Corp	Beverly, Ohio	FeCr, FeCrSi, FeSi, SiMn.	Do.
Kawecki Chemical Co	Easton, Pa	FeCb	Aluminothermic.
Mobil Chemical Co	Nichols, Fla	FeP	Electric.
Molybdenum Corp. of America	Washington, Pa	FeMo, FeW, FeCb, Feb.	Electric and aluminothermic.
Monsanto Chemical Co	Columbia, Tenn Soda Springs, Idaho	FeP	Electric.
NL Industries, Inc	Niagara Falls, N.Y	FeCTi, FeTi, other [2]	Do.
New Jersey Zinc Co.	Palmerton, Pa	Spln	Do.
Ohio Ferro-Alloys Corp	Brilliant, Ohio Philo, Ohio Powhatan, Ohio Tacoma, Wash	FeCr, FeSi, FeB, FeMn, SiMn, other.[2]	Do.
Reading Alloys	Robesonia, Pa	FeCb, FeV	Aluminothermic.
Shieldalloy Corp	Newfield, N.J	FeV, FeTi, FeB, FeCb, NiCb, CrMo, other.[2]	Do.
Stauffer Chemical Co	Mt. Pleasant, Tenn Silver Bow, Mont	FeP	Electric.
Tennessee Alloys Corp	Bridgeport, Ala	FeSi	Do.
Tennessee Valley Authority	Muscle Shoals, Ala	FeP	Do.
Tenn-Tex Alloy Chemical Corp. of Houston.	Houston, Tex	FeMn, SiMn	Do.
Union Carbide Corp	Alloy, W. Va Ashtabula, Ohio Marietta, Ohio Niagara Falls, N.Y Portland, Oreg Sheffield, Ala	FeB, FeCr, FeCrSi, FeCb, FeSi, FeMn, FeTi, FeW, FeV, SiMn, other.[2]	Do.
U.S. Steel Corp.	Clairton, Pa McKeesport, Pa	FeMn	Blast.
Woodward Iron Co	Woodward, Ala Rockwood, Tenn	FeSi, FeMn, SiMn	Electric.

[1] CrMo, Chromium molybdenum; FeMn, ferromanganese; Spln, spiegeleisen; SiMn, silicomanganese; FeSi, ferrosilicon; FeP, ferrophosphorus; FeCr, ferrochromium; FeMo, ferromolybdenum; FeNi, ferronickel; FeTi, ferrotitanium; FeW, ferrotungsten; FeV, ferrovanadium; FeB, ferroboron; FeCb, ferrocolumbium; NiCb, nickel columbium; Si, silicon metal; FeCTi, ferrocarbontitanium.

[2] Includes Alsifer, Simanal, zirconium alloys, ferrosilicon boron, aluminum silicon alloys, and miscellaneous ferroalloys.

APPENDIX D

COPPER MINE PRODUCTION STATISTICS

Table D-1 UNITED STATES PRINCIPAL COPPER MINE STATISTICS/ CAPACITIES AND/OR 1972 PRODUCTION

United States Principal Copper Mine Statistics— Rated Capacities and/or 1972 Production

Company & property name & location	Yr. of initial prod.	Surface or underground	Reduction plant	Ore & waste tpd	Ore tpd	Avg. Cu content %	Avg. MoS, content %	Ore minerals	Gangue rock	Milling cap. tpd.	Total Cu production tpy	Cu in concentrates tpy	% Cu in cons.	Total Cu recovery %	Cu in ppts tpy	MoS, production tpy	Products	Product shipped to	New or expanded prod. tpy	Com d
Asarco																				
Silver Bell, Az	1954	S	concen. heap leach	44,000	10,500	n.a.	n.a.	chalcocite chalcopyrite molybdenite	igneous, sediment.	10,500	20,000	15,300	28	n.a	4,700	120[1]	cons ppts	Hayden, Az El Paso, Tx	none	
Mission, Az	1961	S	concen.	90,000	22,500	n.a.	n.a.	chalcopyrite molybdenite	argillite hornfels fuchite arkose argillites	22,500	45,000	45,000	28	n.a.	0	1,600	cons	Hayden, Az El Paso, Tx	none	
San Xavier North, Az.	1973	S	vat leach	15,000	4,000	n.a.	n.a.	Cu oxides		none	11,000	—	—	—	11,000	0	ppts	Hayden, Az El Paso, Tx		
Anaconda Co.																				
Butte, Mt. UG	1880's	U	concen.	—	3,600	n.a.	0	bornite, chalcocite, chalcopyrite, enargite, tennantite, covellite	pyrite, quartz sericitized qtz. monz., qtz. porph.	2,600	26,523	n.a.	26	n.a.	—	0	cons	Anaconda, Mt	none	
Butte, Mt. OP	1955	S	heap leach	253,000	48,200	n.a.	0			48,200	53,937	n.a.	26	n.a.	—	0	anodes	Anaconda, Mt	none	
Butte, Mt. Mt.											24,000			97.8	24,000	0	ppts	Anaconda, Mt		
Yerington, Nv	1953	S	vat leach concen.	65,000	28,000	n.a.	0	chrysocolla chalcopyrite	qtz. monz. porph.	14,000	38,500	18,500	30	n.a	20,000	0	ppts cons	Anaconda, Mt	none	
Twin Buttes, Az	1969	S	concen.	360,000	32,000	n.a.	n.a.	chalcopyrite molybdenite	qtz., qtz. monz., ls.	32,000	75,000	75,000	29	n.a.	0	1,850	cons	Hayden, Inspiration, Az	7.3 MM ore	7/7
Bagdad Copper Corp.																				
Bagdad, Az	1937	S	concen. heap leach solv. extrac. elec. winning	30,000	5,600	0.70	0.03	chalcopyrite chalcocite molybdenite bornite, oxides	qtz. monz	6,000	19,579	12,279	32	88	7,300[1]	384	cons cathodes	Hayden, Az White Pine, Mi	54,000[2]	197
Cities Service Co.																				
Copperhill, Tn	1899	U	concen. smelter	6,900	6,900	1.00	0	pyrite, pyrrhotite chalcopyrite sphalerite		6,900	21,000	21,000	20	n.a.	0	0	blister Cu sulfate H_2SO_4 Fe pellets Zn cons	market	as stated	197
Miami, Az	1911		leach												6,100		ppts	Douglas, Az	none	
Copper Cities, Az	1955	S	concen. heap leach	28,000	14,000	0.50	0.007	chalcopyrite	qtz. monz.	14,000	22,300	20,000	27	87	2,300	180	cons ppts	Inspiration, Az	none	
Copper Range Co.																				
White Pine, Mi	1955	U	concen. smelter		22,800	1%	0	Cu, Ag chalcocite	shale, sandstone	24,500	72,000	n.a.	31	80.65	0	0	fire refined	market	none	
Duval Corp.																				
Esperanza, Az	1959	S	concen. heap leach	37,000	15,000	0.37	0.053	chalcocite chalcopyrite ox. & carbs.	igneous, metamorphs	15,000	20,265	17,024	25	87	2,661	2,044	cons ppts	custom smelt	none	
Mineral Park	1964	S	concen. heap leach	38,000	19,000	0.42	0.062	as above	as above	19,000	26,559	22,091	20	76.3	4,468	2,919	cons ppts	custom smelt	none	
Battle Mountain, Nv	1957	S	concen. heap leach	33,000	4,535	0.84	0	as above	igneous, sed., metamorph.	4,535	16,322	9,492	25.3	69.4	6,830	0	cons ppts	custom smelt	none	
Sierrita, Az	1970	S	concen.	220,000	83,000	0.29	0.048	chalcopyrite bornite	igneous	83,000	68,940	68,940	26.1	84.5	0	9,731	cons	custom smelt	none	
Inspiration Consolidated Copper Co.																				
Inspiration, Az	1915	S	concen. heap leach vat leach smelter elec. ref.	39,157	21,290	0.709	0.0121	chalcocite chrysocolla malachite azurite	schist granite	20,000	53,987	25,347	38.24	76.41	22,738	370	ppt cathodes rod	market	9.1 MM ore	197
Christmas, Az	1962	S	concen.	30,357	5,111	0.798	—	chalcopyrite bornite chalcocite covellite	met. ls., qtz. diorite, andesite	5,500	11,244	11,244	20.43	71.97	0	0	cons	Inspiration	none	
Ox Hide, Az	1968	S	heap leach	9,671	6,705	0.344	—	ox & carbs	schist, qtz. monz. porph.	none	4,848	—	—	41.7	4,848	0	ppt	Inspiration	none	
Kennecott Copper Corp.																				
Bingham, Ut	1904	S	concen. heap leach smelter elec. ref.	376,543	106,560	0.677	0.0483	chalcopyrite bornite molybdenite	granite, porph., ls., quartzite	108,500	258,037	210,714	27.06	89.07	n.a.	11,254	cathodes anodes ppts	market	none	
Ruth, Nv	1908	S	concen. heap leach smelter	118,250	21,500	0.8	0.012	chalcopyrite chalcocite	qtz. monz., ls.	21,500	45,000	42,000	15.5	78	3,000	110	blister ppts	Maryland	none	
Chino, NM	1909	S	concen. heap leach smelter	87,196	22,970	0.865	0.013	chalcocite chalcopyrite	ls., shale, granodiorite, qtz. diorite	22,800	75,700	55,800	20.0	79.3	n.a.	423	blister fire refined	market	none	
Ray, Nv	1911	S	concen. heap leach vat leach smelter elec. winning	115,000	35,400	0.94	0.025e	chalcocite chalcopyrite molybdenite chrysocolla	diabase, schist, qtz. monz., quartzite	25,400	103,478	64,336	18	82	14,600	559	ppts anodes cathodes	Maryland Hurley, NM	none	
Magma Copper Co.																				
Superior, Az	1912	U	concen.	3,500	1,600	4.5	0	chalcopyrite bornite	ls., primary hematite, pyrite	4,000	24,000	24,000	25	95.5	0	0	cons	San Manuel, Az	1.01 MM ore	1/7
San Manuel, Az	1956	U	concen. smelter elec. ref.	62,500	62,500	0.69	0.025	chalcopyrite chalcocite pyrite molybdenite	qtz. monz. porph.	62,500	144,000	144,000	28	92.7	0	4,200	cathodes rod	market	none	
Phelps Dodge Corp.																				
Copper Queen, Az UG	1878	U	concen.	—	2,648	4.4		chalcocite	qtz. porph., ls.	19,000[3]	25,900	23,000	17.4	94.8	0	0	cons & direct smelt. ppts	P.D. smelters	none	
Copper Queen, Az OP	1954		heap leach	21,700	14,700	0.64	—	chalcopyrite bornite		—	21,600	16,600	10.3	69.3	5,000	0				
Morenci, Az	1942	S	concen. heap leach smelter	171,000	56,000	0.83	—	chalcocite chalcopyrite covellite	monz. porph., granite, ls., diabase	60,000	120,000	107,800	22.2	75.2	12,200	0	anodes	P.D. refine	none	
New Cornelia, Az	1917	S	concen. smelter	97,000	33,500	0.70	—	chalcopyrite bornite chalcocite	qtz. monz., rhyolite	34,000	57,900	57,900	30.3	84.6	0	0	anodes	P.D. refine	none	
Tyrone, NM	1969	S	concen. heap leach	189,000	48,000	0.85	—	chalcocite	qtz. monz.	48,000	100,000	96,000	21.3	77.5	4,000	0	cons ppts	P.D. smelters	100,000	7/7
Pima Mining Co.																				
Pima, Az	1957	S	concen.	140,000	53,500	0.5	0.017	chalcopyrite molybdenite	metased.	53,500	82,500	82,500	25	85	0	1,500[1]	cons	Douglas & San Manuel, Az	none	
Ranchers Exploration																				
Bluebird, Az	1964	S	heap leach solv. extrac. elec. ref.	25,000	12,000	0.5	—	chrysocolla	schist, granite	none	7,500	—	—	50	0	0	cathodes	market	25,000[2]	

Notes: [1] Production curtailed August 1972 [2] Cathode Cu by electrowinning [3] Tentative [4] Includes Miami Personnel [5] Includes Lavender pit ore [6] Total for branch [7] At 58.37% Mo [8] Fire Refining heap leach in place

APPENDIX E

LEAD PRODUCING MINES IN THE UNITED STATES

Table E-1 LEAD PRODUCING MINES IN UNITED STATES

COMPANY NAME	NAME OF MINE & LOCATION	PRINCIPAL METALS MINED	ORE PRODUCTION IN 1968
Aho, George	Butterfly, Nevada	Ag, Pb	18
American Smelting & Refining Co.	Page, Idaho	Pb, Zn	78,693
Antonioli, Peter	Moniton-Broadwater, Montana	Ag, Pb, Zn	540
Bebb, Virgil	Douglas, Idaho	Ag, Pb, Zn	160
Bunker Hill Co.	Bunker Hill, Idaho	Ag, Pb, Zn	351,930
Bunker Hill Co.	Star, Idaho	Ag, Pb, Zn	172,310
Byrd, John H.	Sam Gaty, Montana	Au, Ag, Pb	195
Byrd, John H.	Franklin, Montana	Au, Ag, Pb	70
Canyon Silver Mines	Canyon Silver, Idaho	Ag, Pb, Zn	2,100
Clipper Mining Co.	Clipper, Colo.	Ag, Pb, Zn	Development only
Combs, Marvin W.	Liminite, Arizona	Ag, Pb	34
Crim, John D.	Henrietta, Colo.	Ag, Pb, Zn	290
Day Mines, Inc.	Dayrock, Idaho	Ag, Pb, Zn	23,715
Dresser Industries	Magment, Mo.	Pb	116,120
Farrow Bros.	Diamond Jim, Nevada	Au, Ag, Pb	360
Gerlach, Keith H.	Diamond Jim, Nevada	Pb	Development only

COMPANY NAME	NAME OF MINE & LOCATION	PRINCIPAL METALS MINED	ORE PRODUCTION IN 1968
Hand, John	Hand, Montana	Au, Ag, Pb	2,050
Helca Mining Co.	Star Morning, Idaho	Ag, Pb, Zn	172,310
Helca Mining Co.	Lucky Friday, Idaho	Ag, Cu, Pb, Zn	87,020
Helca Mining Co.	Mayflower, Utah	Ag, Cu, Pb, Zn	111,000
Hopkins, John F.	Negros, Montana	Ag, Pb	29
Kennecot Copper Corp.	Burgin, Utah	Ag, Pb, Zn	181,440
Kraft Buildg., Contr.	Treasure Key, Colo.	Pb	
Marshal Douglas	Santiago, Colo.	Au, Ag, Pb, Zn	92,610
McBridge, G. V. R.	Montgomery, Montana	Pb	Development only
McFarland & Hullinger	Iron King, Arizona	Ag, Cu, Pb, Zn	92,610
Meissner, Donald O.	Goodview, Nevada	Ag, Pb, Sb	135
Minerava Oil Co.	Jefferson, Illinois	Fluorspar, Pb, Zn	22,800
Monte Cristo Mining Corp.	Jubilee, Calif.	Pb	1,815
Nygren, Rudy	Ferdinand, Montana	Pb, Zn	13
Nygren, Rudy	Yellow Bird, Montana	Ag, Pb, Zn	11
Osceola Metals Co.	Osceola, Colo.	Pb, Zn	12,975
Ozark Lead Co.	Ozark Lead, Mo.	Pb, Zn	

Table E-2. MINE PRODUCTION OF RECOVERABLE LEAD IN THE UNITED STATES, BY

State	1967	1968	1969	1970	1971
Alaska	--	W	2	--	--
Arizona	4,771	1,704	217	285	859
California	1,735	4,001	2,518	1,772	2,284
Colorado	21,923	19,778	21,767	21,855	25,746
Idaho	61,387	54,790	65,597	61,211	66,610
Illinois	2,384	1,467	791	1,532	1,238
Kansas	1,031	1,227	395	80	--
Kentucky	845	W	--	--	--
Missouri	152,649	212,611	355,452	421,764	429,634
Montana	898	1,870	1,753	996	615
Nevada	1,500	863	1,420	364	111
New Mexico	1,827	1,363	2,368	3,550	2,971
New York	1,653	1,396	1,686	1,280	877
Oklahoma	2,727	2,387	605	797	--
Oregon	--	W	(1)	(1)	--
South Dakota	--	--	1	3	--
Utah	53,813	45,205	41,332	45,377	38,270
Virginia	3,430	3,573	3,358	3,356	3,386
Washington	2,762	5,655	8,649	6,784	5,177
Wisconsin	1,596	1,126	1,102	761	752
Other States	--	140	--	--	20
Total	316,931	359,156	509,013	571,767	578,550

W Withheld to avoid disclosing individual company confidential data; included in "Other States."
(1) Less than ½ unit.

APPENDIX F

ZINC PRODUCTION IN THE UNITED STATES, BY STATE, 1971

Table F-1 PRODUCTION OF LEAD AND ZINC IN THE UNITED STATES IN 1971, BY STATE AND CLASS OF ORE, FROM OLD TAILINGS, ETC., IN TERMS OF RECOVERABLE METALS

State	Zinc ore			Lead ore			Zinc-lead ore		
	Gross weight (dry basis)	Zinc content	Lead content	Gross weight (dry basis)	Zinc content	Lead content	Gross weight (dry basis)	Zinc content	Lead content
Arizona	--	--	--	3,250	69	124	5	1	1
California	(1)	(1)	(1)	(1)	(1)	(1)	[1] 89,042	[1] 3,003	[1] 2,284
Colorado	311,099	32,239	3,612	143	--	46	425,701	16,034	12,306
Idaho	973	69	22	274,716	2,506	28,479	780,970	41,854	36,848
Maine	--	--	--	--	--	--	--	--	--
Missouri	--	--	--	8,624,668	48,215	429,634	--	--	--
Montana	4,027	265	30	6,190	12	373	217	6	10
Nevada	74	10	3	197	2	10	532	54	81
New Jersey	172,179	29,977	--	--	--	--	--	--	--
New Mexico	--	--	--	--	--	--	119,021	13,473	2,971
New York	171,533	15,585	--	--	--	--	606,978	47,835	877
Oklahoma	--	--	--	--	--	--	--	--	--
Pennsylvania	628,408	27,438	--	--	--	--	--	--	--
Tennessee	4,244,715	111,992	--	--	--	--	--	--	--
Utah	--	--	--	(2)	(2)	(2)	[2] 363,216	[2] 22,974	[2] 33,462
Virginia	614,721	16,829	3,386	--	--	--	--	--	--
Washington	425	8	--	621	--	25	252,492	5,774	5,151
Wisconsin	413,760	10,645	752	--	--	--	--	--	--
Other States	281,955	11,190	486	--	--	--	--	--	--
Total	6,843,869	256,247	8,291	8,909,785	50,804	458,691	2,638,174	151,008	93,991
Percent of total zinc-lead	--	51	2	--	10	79	--	30	16

See footnotes at end of table.

APPENDIX G

ALUMINUM, ALUMINA AND BAUXITE PRODUCTION STATISTICS

Table G-1 MATRIX OF THE CHARACTERISTICS OF PRIMARY ALUMINUM PLANTS

	Production Rate 1973	Age	Anode Type: Soderberg Vertical	Anode Type: Soderberg Horiz.	Anode Type: Pre-Baked	Air Pollution Control Methods: Primary	Air Pollution Control Methods: Secondary	Air Pollution Control Methods: Anode Bake Plant	Air Pollution Control Methods: Anode Paste Plant	Air Pollution Control Methods: Cast House	Air Pollution Control Methods: Other	Water Effluent Treatment
	1000 ST											
Aluminum Company of America												
Alcoa, Tennessee	275	23	20%		80%	Wet + ESP Dry	None	None	Baghouse			Lime - recycle
Badin, North Carolina	130	9			X	Dry	None	Controlled Firing	"			
Massena, New York	125	31			X	Dry ESP + Wet Scrub	None	Wet	"			Lime - once through
Point Comfort, Texas	175	23	X			Wet	None		"			Lime - recycle - no discharge
Rockdale, Texas	275	21			X	ESP + Wet Scrub	None	None	"			Recycle - no discharge
Vancouver, Washington	100	33			X	Wet	None	Wet	"			Lime - once through
Warrick, Indiana	225	26			X	Dry	None	ESP	"			
Wenatchee, Washington	175	21			X	Wet-Dry[a]	None	Wet	Baghouse			Lime - once through
Anaconda Aluminum Company												
Columbia Falls, Montana	180		X									
Sebree, Kentucky	220				X							
Consolidated Aluminum Corp.												
New Johnsonville, Tennessee	140	10			X	Wet	None	None	None	None		
Eastalco Aluminum Company												
Frederick, Maryland	85	3			X		Wet	Wet	Wet			Cryolite - Recycle[c]
Gulf Coast Aluminum Co.												
Lake Charles, Louisiana	35	2			X	Wet	Wet	Dry	Dry	None	Closed System	Settling Basins
Martin-Marietta												
The Dalles, Oregon	87	13	X			Wet ESP	Wet		Wet			1°-Lime, 2°-None
Goldendale, Washington	110		X			Wet ESP	Wet		Wet			1°-Lime, 2°-None
Intalco Aluminum Corp.												
Ferndale, Washington	265	7			X	Dry	Wet		Wet			Cryolite - Recycle
Kaiser Aluminum & Chem. Corp.												
Chalmette, Louisiana	260	22		X		Wet[d]	None		None	None		None
Mead, Washington	185	30			X	Wet[d]	None	None	Baghouse	Wet		Lime - Recycle
Ravenswood, West Virginia	166	16			X	Dry	None	None	Baghouse	None		None
Tacoma, Washington	75	20		X		Wet[b]	None	None	Baghouse	None		Lime - Recycle
National-Southwire Aluminum Co.												
Hawesville, Kentucky	120	3			X	Wet	None	None	Dry	None	Dry	Lime - Recycle Lagoon
Noranda												
New Madrid, Missouri	70	2			X	Dry	None	None	None	None	Dry	
Ormet Corporation												
Hannibal, Ohio	240	15			X	Wet	None	None				Lime - Scrubber bleed Cryolite - Recycle
Revere												
Scottsboro, Alabama	112	2			X	Wet	Wet	Dry	Dry		Dry	Lime - Recycle pond
Reynolds												
Arkadelphia, Arkansas	68	20		75%	25%	Wet						Cryolite - Recycle
Jones Mills, Arkansas	125	30			X							None
Listerhill, Alabama	[illegible]			X		Wet						Cryolite - Recycle
Longview, Washington	[illegible]	32/5		X		Wet	None		Dry	Wet		Cryolite - Recycle
Massena, New York	[illegible]	15		X		Wet						Cryolite - Recycle
Corpus Christi, Texas	[illegible]	21		X		Wet	None		Dry			Cryolite - Recycle
Troutdale, Oregon	[illegible]	35			X	Wet		None		Wet		Cryolite - Recycle

NOTE: ST = Short ton

(a) 3 potlines have wet scrubbers, 2 potlines have dry scrubbing system.
(b) Conversion to dry scrubbers planned.
(c) Cryolite filtrate treated with lime.
(d) Demonstration proprietary dry scrubbing unit on 1 of 9 potlines.
(e) Zero discharge to navigable waters - plant effluent is diverted to Sherwin Alumina plant for use as make-up water.

Table G-2 CAPACITIES OF DOMESTIC ALUMINA PLANTS, DECEMBER 31, 1971

(thousand short tons per year)

Company and plant	Capacity
Aluminum Co. of America:	
Bauxite, Ark	375
Mobile, Ala	1,025
Point Comfort, Tex	1,350
Total	2,750
Harvey Aluminum, Inc.: St. Croix, V.I.	350
Kaiser Aluminum & Chemical Corp:	
Baton Rouge, La	1,025
Gramercy, La	[1]800
Total	1,825
Ormet Corp.: Burnside, La	580
Reynolds Metals Co.:	
Hurricane Creek, Ark	840
Corpus Christi, Tex	1,380
Total	2,220
Grand total	7,725

[1] Capacity may vary depending upon the bauxite being used.

Table G-3 MINE PRODUCTION OF BAUXITE AND SHIPMENTS FROM MINES AND PROCESSING PLANTS TO CONSUMERS IN THE UNITED STATES

(thousand long tons and thousand dollars)

State and year	Mine production			Shipments from mines and processing plants to consumers		
	Crude	Dry equivalent	Value [1]	As shipped	Dry equivalent	Value [1]
Alabama and Georgia:						
1967	108	83	$810	85	84	$1,236
1968	110	83	694	74	69	898
1969	117	88	1,020	72	79	1,324
1970 [2]	270	213	3,778	149	161	3,299
1971	261	207	3,564	143	171	3,566
Arkansas:						
1967	1,943	1,571	18,269	2,022	1,742	21,343
1968	1,961	1,582	23,058	1,962	1,680	25,349
1969	2,116	1,755	24,706	2,044	1,765	26,304
1970	2,251	1,869	26,293	2,194	1,917	29,049
1971	2,157	1,781	24,979	2,161	1,892	28,296
Total United States: [3]						
1967	2,051	1,654	19,079	2,107	1,826	22,579
1968	2,071	1,665	23,752	2,036	1,749	26,247
1969	2,233	1,843	25,725	2,116	1,844	27,628
1970 [2]	2,522	2,082	30,070	2,343	2,078	32,348
1971	2,419	1,988	28,543	2,305	2,063	31,862

[1] Computed from selling prices and values assigned by producers and from estimates of the Bureau of Mines.
[2] Includes data for Oregon and Washington.
[3] Data may not add to totals shown because of independent rounding.

APPENDIX H

TITANIUM CONSUMPTION (UNITED STATES) STATISTICS

Table H-1 CONSUMPTION OF TITANIUM CONCENTRATES IN THE UNITED STATES, BY PRODUCT

Year and product	Ilmenite [1]		Titanium slag		Rutile	
	Gross weight	TiO_2 content (estimated)	Gross weight	TiO_2 content (estimated)	Gross weight	TiO_2 content (estimated)
[illegible]	919,206	488,236	122,926	86,945	153,457	147,158
[illegible]	959,558	510,353	142,168	100,591	160,273	153,600
[illegible]	1,003,501	541,840	138,553	98,075	185,432	178,090
[illegible]						
Pigments	966,350	515,860	129,247	91,639	140,790	135,350
Titanium metal	--	--	--	--	(2)	(2)
Welding-rod coatings and fluxes	510	356	(3)	(3)	15,634	14,917
Alloys and carbide	r 2,905	r 1,320	(3)	(3)	79	75
Ceramics	(2)	(2)	--	--	r 391	r 377
Glass fibers	--	--	--	--	(2)	(2)
Miscellaneous	21	13	--	--	r 31,112	r 29,644
Total	r 969,786	r 517,549	129,247	91,639	r 188,006	r 180,363
[illegible]						
Pigments	890,226	481,141	147,191	104,375	191,786	183,970
Titanium metal	--	--	--	--	(2)	(2)
Welding-rod coatings and fluxes	641	474	(3)	(3)	15,113	14,383
Alloys and carbide	2,599	1,104	(3)	(3)	(2)	(2)
Ceramics	(2)	(2)	--	--	403	390
Glass fibers	--	--	--	--	(2)	(2)
Miscellaneous	3,172	1,714	--	--	20,605	19,608
Total	896,638	484,433	147,191	104,375	227,907	218,351

r Revised.
[1] Includes a mixed product containing rutile, leucoxene, and altered ilmenite.
[2] Included with "Miscellaneous" to avoid disclosing individual company confidential data.
[3] Included with "Pigments" to avoid disclosing individual company confidential data.

APPENDIX I

URANIUM MINING AND PROCESSING COMPANIES

Table I-1 U.S. URANIUM MILLING COMPANIES AND PLANTS IN 1971

Company	Plant location	Capacity (tons of ore per day)
The Anaconda Co.	Bluewater, N. Mex.	3,000
Atlas Corp.	Moab, Utah	1,500
Continental Oil Co.—Pioneer Nuclear, Inc.	Karnes County, Tex.	[1] 1,750
Cotter Corp.	Canon City, Colo.	450
Dawn Mining Co.	Ford, Wash.	500
Federal Resources Corp.—American Nuclear Corp.	Gas Hills, Wyo.	950
Humble Oil and Refining Co.	Powder River Basin, Wyo.	[1] 2,000
Kerr-McGee Corp.	Grants, N. Mex.	7,000
Mines Development, Inc.	Edgemont, S. Dak.	650
Petrotomics Co.	Shirley Basin, Wyo.	1,500
Rio Algom Mines, Ltd.	La Sal, Utah	[1] 500
Susquehanna-Western Inc.	Falls City, Tex.	1,000
Do.	Ray Point, Tex.	1,000
Union Carbide Corp.	Uravan, Colo. } Rifle, Colo. }	2,000
Do.		
Do.	Natrona County, Wyo.	1,000
United Nuclear Corp. Inc.—Homestake Mining Co.	Grants, N. Mex.	3,500
Utah International Inc.	Gas Hills, Wyo.	1,200
Do.	Shirley Basin, Wyo.	1,200
Western Nuclear, Inc.	Jeffrey City, Wyo.	1,200
Total		31,900

[1] Under construction; planned completion in 1972.

Source: U.S. Atomic Energy Commission.

AND FABRICATING NUCLEAR FUEL MATERIALS IN 1971

Company	Location	UF_6	UO_2	UO_2 pellets	Fuel fabrication					Depleted uranium		Scrap		Spent fuel reprocessing	Enriched U to UF_6
					UO_2	Carbide	Special	U-233	Pu	Metal	Compounds	U	Pu		
Allied Gulf Nuclear Services, Inc	Barnwell, S.C	--	--	--	--	--	--	--	--	--	--	--	--	[1] X	[1] X
Allied Chemical Corp	Metropolis, Ill	X	--	--	--	--	--	--	--	--	--	--	--	--	--
Atomics International Div., North American Rockwell Corp.	Canoga Park, Calif	--	--	--	X	X	X	--	X	X	--	--	[1] X	--	--
The Babcock and Wilcox Co	Lynchburg, Va	--	[1] X	[1] X	X	--	--	--	X	--	--	[1] X	[1] X	--	--
Combustion Engineering, Inc	Windsor, Conn	--	[1] X	X	X	--	--	--	[1] X	--	--	--	--	--	--
General Electric Corp	Morris, Ill	--	--	--	--	--	--	--	--	--	--	--	--	[1] X	[1] X
Do	San Jose and Vallecitos, Calif.	--	--	--	--	--	--	--	X	--	--	X	[1] X	--	--
Do	Wilmington, N.C	--	X	X	X	--	--	--	--	--	--	X	--	--	--
Gulf General Atomic Co	San Diego, Calif	--	--	--	--	X	X	[1] X	--	--	--	X	--	--	--
Gulf United Nuclear Fuel Corp	Elmsford and Pawling, N.Y.	--	--	--	--	X	--	--	X	--	--	--	[1] X	--	--
Do	Hematite, Mo	--	X	X	--	X	--	--	--	--	X	--	--	--	--
Do	New Haven, Conn	--	--	--	X	--	X	--	--	X	--	--	--	--	--
Jersey Nuclear Co	Richland, Wash	--	X	X	X	--	--	--	X	--	--	[1] X	[1] X	--	--
Kerr-McGee Corp	Cimarron, Okla	--	X	X	X	X	X	--	X	X	X	X	X	--	--
Do	Sequoyah, Okla	X	--	--	--	--	--	--	--	--	--	--	--	--	--
NL Industries	Albany, N.Y	--	--	--	--	--	X	--	--	X	--	--	--	--	--
Nuclear Chemicals and Metals Corp	Huntsville, Tenn	--	[1] X	--	--	X	--	--	--	--	X	[1] X	--	--	--
Nuclear Fuel Services, Inc	Erwin, Tenn	--	X	X	X	X	--	X	X	X	X	X	X	--	--
Do	West Valley, N.Y	--	--	--	[1] X	--	--	--	[1] X	--	--	--	--	X	[1] X
Nuclear Materials and Equipment Corp. (NUMEC).[2]	Apollo, Pa	--	X	X	X	X	X	--	--	--	X	X	--	--	X
Do	Leechburg, Pa	--	X	X	X	X	X	X	X	X	--	--	X	--	--
Nuclear Metals Div., Whittaker Corp.	West Concord, Mass	--	--	--	--	--	X	--	--	--	--	--	--	--	--
Tennessee Nuclear Specialties, Inc	Jonesboro, Tenn	--	X	--	--	--	--	--	--	X	--	X	--	--	--
Texas Instruments, Inc	Attleboro, Mass	--	--	--	--	--	X	--	--	--	--	--	--	--	--
United Nuclear Corp	Wood River Junction, R.I.	--	--	--	--	--	--	--	--	--	--	X	--	--	--
Westinghouse Electric Corp	Cheswick, Pa	--	--	X	X	X	--	--	X	--	--	--	X	--	--
Do	Columbia, S.C	--	X	X	X	--	--	--	--	--	--	[1] X	--	--	--

X Indicates capacity shown.
[1] Under construction or planned.
[2] Formerly an Atlantic Richfield Oil Co. subsidiary; facilities acquired by Babcock and Wilcox Co. in November.

Source: U.S. Atomic Energy Commission.

TECHNICAL REPORT DATA
(Please read Instructions on the reverse before completing)

1. REPORT NO. EPA-650/2-74-115	2.	3. RECIPIENT'S ACCESSION NO.
4. TITLE AND SUBTITLE Trace Pollutant Emissions from the Processing of Metallic Ores		5. REPORT DATE October 1974
		6. PERFORMING ORGANIZATION CODE
7. AUTHOR(S) V. Katari, G. Isaacs, and T. W. Devitt		8. PERFORMING ORGANIZATION REPORT NO. PEDCo-3146E
9. PERFORMING ORGANIZATION NAME AND ADDRESS PEDCo-Environmental Specialists, Inc. Atkinson Square (Suite 13) Cincinnati, Ohio 45246		10. PROGRAM ELEMENT NO. 1AB015; ROAP 21AUZ-02a
		11. CONTRACT/GRANT NO. 68-02-1321 (Task 5)
12. SPONSORING AGENCY NAME AND ADDRESS EPA, Office of Research and Development NERC-RTP, Control Systems Laboratory Research Triangle Park, NC 27711		13. TYPE OF REPORT AND PERIOD COVERED Final; Through 8/74
		14. SPONSORING AGENCY CODE
15. SUPPLEMENTARY NOTES		

16. ABSTRACT The report gives results of a study of eight metallic ore processing industries. Selected for their potential for hazardous pollutant emissions, the industries were: iron and steel, ferroalloy, primary copper, primary lead, primary zinc, aluminum, titanium, and uranium. Bases for selection were: quantity of ore processed, toxicity of potential emissions, fugitive dust emissions potential, and process characteristics. The report describes the processes in each industry in terms of a functional process statement, process operating conditions, energy requirements, potential emissions, and method of transferring material from one process to the next. Eleven processes are recommended for more detailed study because of their significant hazardous pollutant emissions potential.

17. KEY WORDS AND DOCUMENT ANALYSIS

a. DESCRIPTORS		b. IDENTIFIERS/OPEN ENDED TERMS	c. COSATI Field/Group
Air Pollution	Fuels	Air Pollution Control	13B, 21D
Metalliferous Minerals	Furnaces	Stationary Sources	13A
	Trace Elements	Particulates	08G, 06A
Beneficiation	Waste Disposal	Energy Requirements	11F, 08I
Dust	Water Pollution	Mineral Mining	
Toxicity		Mineral Processing	06T

18. DISTRIBUTION STATEMENT Unlimited	19. SECURITY CLASS (This Report) Unclassified	21. NO. OF PAGES 282
	20. SECURITY CLASS (This page) Unclassified	22. PRICE

EPA Form 2220-1 (9-73)