United States
Environmental Protection
Agency

Office of Marine
and Estuarine Protection
Washington DC 20460

March 1987
EPA 430/9-86-004
PB87-221164

Water

EPA

Quality Assurance/Quality Control (QA/QC) for 301(h) Monitoring Programs: Guidance on Field and Laboratory Methods

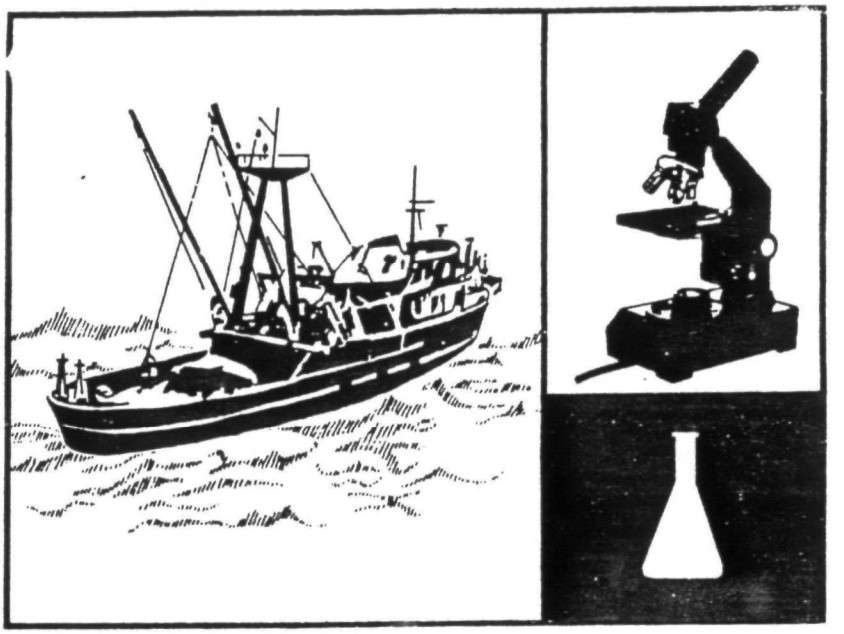

EPA Contract No. 68-01-6939
TC 3953-04

Final Report

QUALITY ASSURANCE/QUALITY CONTROL (QA/QC) FOR 301(h) MONITORING PROGRAMS: GUIDANCE ON FIELD AND LABORATORY METHODS

for

Marine Operations Division
Office of Marine and Estuarine Protection
U.S. Environmental Protection Agency
Washington, DC 20460

March, 1987

by

Tetra Tech, Inc.
11820 Northup Way, Suite 100
Bellevue, Washington 98005

PREFACE

This manual has been prepared by EPA's Marine Operations Division, Office of Marine and Estuarine Protection in response to requests from EPA Regional Offices and coastal municipalities with sewage treatment plants discharging into estuarine and marine coastal waters. The members of the 301(h) Task Force of EPA, which includes representatives for the EPA Regions I, II, III, IV, IX and X, the Office of Research and Development, and the Office of Water, are to be commended for their vit· role in the development of this guidance by the technical support contractor, Tetra Tech, Inc. Under regulations implementing Section 301(h) of the Clean Water Act, municipalities are required to conduct monitoring programs to evaluate the impact of their discharge on marine biota, to demonstrate compliance with applicable water quality standards, and to measure toxic substances in the discharge. The collection and analysis of high quality data require that specific, established quality assurance and quality control (QA/QC) protocols be adhered to in each of these major monitoring programs.

QA/QC procedures are included in this document for environmental variables that may be measured in effluent, receiving water, sediment, and organism tissues sampled during 301(h) monitoring programs. Quality assurance and quality control procedures are provided for sample collection, field sample handling, and laboratory processing to implement specific monitoring program requirements provided in the 301(h) modified NPDES permit.

This manual is the result of several years of experience and effort in designing, implementing, and reporting results of field and laboratory monitoring programs with the avowed purpose of encouraging both national and regional consistency in estuarine and marine monitoring programs. In this regard, special appreciation is due to the members of the 301(h) Task Force who contributed their valuable time and expertise in the development of this manual.

The information provided herein will be useful to U.S. EPA monitoring program reviewers, permit writers, permittees, and other organizations involved in performing nearshore monitoring studies. As the monitoring variables included in this document are commonly used in many marine and estuarine monitoring programs, the guidance provided herein has broad applicability beyond the 301(h) program.

CONTENTS

	Page
LIST OF FIGURES	v
LIST OF TABLES	vi
ACKNOWLEDGMENTS	vii
INTRODUCTION	1
PURPOSE	1
SCOPE	1
FORMAT	2
EFFLUENT MONITORING	7
GENERAL METHODS	7
Sampling Preparation	7
Sampling Procedures	8
Sample Handling	9
Field Procedures	9
Sample Shipment	15
Laboratory Procedures	19
EFFLUENT ANALYSES	22
Flow	23
pH	25
Temperature	28
Turbidity	30
Total Suspended Solids	34
Settleable Solids	37
Floating Particulates	39
Dissolved Oxygen (Winkler Method)	41
Dissolved Oxygen (Probe Method)	44
Biochemical Oxygen Demand (BOD)	47
Total Chlorine Residual	50
Oil and Grease	52
Nitrogen (Ammonia)	55
Nitrogen (Total Kjeldahl)	57
Nitrogen (Nitrate-Nitrite)	59
Phosphorus (Total)	61
Priority Pollutant Metals	63
Priority Pollutant Organic Compounds	68
Total and Fecal Coliform Bacteria	74
Enterococcus Bacteria	77

MONITORING THE RECEIVING ENVIRONMENT 80

GENERAL METHODS 80

Sampling Preparation 80
Sampling Procedures 83

Station Location 83
Water Sampling 84
Grab Sampling 90
Trawl Sampling 97

Sample Handling 103

Field Procedures 103
Sample Shipment 113
Laboratory Procedures 114

Shipboard Laboratory Analyses 117

RECEIVING WATER ANALYSES 119

pH 120
Salinity 124
Temperature 127
Color 129
Transparency 131
Turbidity 132
Total Suspended Solids 135
Settleable Solids 138
Floating Particulates 140
Dissolved Oxygen (Winkler Method) 142
Dissolved Oxygen (Probe Method) 145
Biochemical Oxygen Demand (BOD) 148
Oil and Grease 151
Nitrogen (Ammonia) 155
Nitrogen (Total Kjeldahl) 157
Nitrogen (Nitrate-Nitrite) 159
Phosphorus (Total) 161
Total and Fecal Coliform Bacteria 163
Enterococcus Bacteria 166
Chlorophyll a 169
Phytoplankton 172

SEDIMENT/INFAUNA ANALYSES 177

Grain Size 178
Total Solids/Water Content 181
Total Volatile Solids (TVS) 183
Total Organic Carbon (TOC) 185
Biochemical Oxygen Demand (BOD) 187
Chemical Oxygen Demand (COD) 190
Oil and Grease 192

Sulfides (Total and Water Soluble) 196
Priority Pollutant Metals 199
Priority Pollutant Organic Compounds 205
Infauna 212

BIOACCUMULATION/TRAWL ANALYSES 234

Priority Pollutant Metals 235
Priority Pollutant Organic Compounds 243
Demersal Fishes and Megainvertebrates 251

REFERENCES 255

GLOSSARY 260

APPENDIX A RECOMMENDED METHODS FOR METALS IN EFFLUENT A-1

APPENDIX B RECOMMENDED METHODS FOR ORGANIC COMPOUNDS IN EFFLUENT B-1

FIGURES

Number		Page
1	An example of chain-of-custody record	16
2	Examples of a sample analysis request form and a shipping seal	17
3	Deployment of a grab sampler	93
4	Examples of acceptable and unacceptable grab samples	95
5	Transect length as a function of urrent speed	101
6	An example of a chain-of-custody record	111
7	Examples of a sample analysis request form and a shipping seal	112
8	Construction of a sieve box	213
9	Example of a sieving stand	218

TABLES

Number		Page
1	Environmental variables included in this document	3
2	Recommended sample sizes, containers, preservation, and holding times for effluent samples	10
3	Recommended methods for measuring effluent variables	12
4	Examples of problems frequently encountered during offshore surveys and possible solutions to each problem	82
5	Recommended sample sizes, containers, preservation, and holding times for offshore samples	104
6	Recommended methods for measuring offshore variables	106
7	Some common external abnormalities observed in fishes from polluted areas	254
A-1	List of approved inorganic test procedures [note: this is a reproduction of Table 1B of U.S. EPA (1984)]	A-1
B-1	List of approved test procedures for non-pesticide organic compounds [note: this is a reproduction of Table 1C of U.S. EPA (1984)]	B-1
B-2	List of approved test procedures for pesticides [note: this is a reproduction of Table 1D of U.S. EPA (1984)]	B-3

ACKNOWLEDGMENTS

This document has been reviewed by the 301(h) Task Force of the U.S. EPA, which includes representatives from the Water Management Divisions of U.S. EPA Regions I, II, III, IV, IX, and X; the Office of Research and Development - Environmental Research Laboratory - Narragansett (located in Narragansett, RI and Newport, OR), and the Marine Operations Division in the Office of Marine and Estuarine Protection, Office of Water. Among the reviewers, the assistance provided by Dr. Steve Ferraro under the direction of Dr. Donald J. Baumgartner, Dr. Donald Phelps under the direction of Dr. Allan Beck, and Dr. Brian Melzian under the direction of Patricia Eklund in coordinating the numerous technical comments from the Office of Research and Development and Region IX is gratefully acknowledged.

This technical guidance document was prepared by Tetra Tech Inc. for the U.S. EPA Operations Division, Office of Marine and Estuarine Protection, Office of Water) under the 301(h) post-decision technical support contract No. 68-01-6938, Allison J. Duryee, Project Officer. This document was prepared under the direction of Dr. Thomas Ginn (Program Director) and Dr. Scott Becker (Work Assignment Manager) of Tetra Tech, Inc. The following Tetra Tech staff members contributed to specific sections: Ms. Ann Bailey (effluent variables, priority pollutant metals), Mr. Robert Barrick (priority pollutant organic compounds), Dr. Scott Becker (effluent variables, water column variables, demersal fishes and megainvertebrates, conventional sediment variables), Dr. Gordon Bilyard (infauna, conventional sediment variables), and Ms. Julia Wilcox (priority pollutant organic compounds, priority pollutant metals). The following outside consultants also contributed to specific sections: Mr. Jack Word (Evans Hamilton, Inc. - infauna), Dr. Victor Cabelli (CABs Associates - microbiological variables), Ms. Kathy Krogslund and Mr. Ron Citterman (University of Washington - water column variables).

INTRODUCTION

PURPOSE

This document was produced in response to specific regional requests for assistance on technical issues raised during issuance of 301(h)-modified NPDES permits. This technical guidance to regional program offices and permittees provides the framework for making informed decisions with respect to the field and laboratory methods used when monitoring the effects of sewage discharge on marine and estuarine ecosystems. The principal objectives of this document are to ensure that:

- Samples are collected, processed, stored, shipped, and analyzed using acceptable and standardized procedures
- Quality of generated data is documented adequately
- Results are reported completely and correctly
- Security of samples and data is maintained at all times.

SCOPE

The information presented in this document is designed to complement the sampling and analysis specifications contained in the permits for individual monitoring programs. Those specifications identify the sampling strategy of each survey (e.g., station locations, field replication, time of sampling), as well as which environmental variables will be measured. It is likely that different monitoring programs will require different combinations of variables to be measured, depending upon site-specific and discharge-specific considerations. In this document, collection and analysis procedures

are presented for most environmental variables that may be measured in effluent, receiving water, sediment, and tissue during a 301(h) monitoring program (Table 1).

Information presented in this document can be used to address most of the quality assurance/quality control (QA/QC) plan elements described in "Guidance for Preparation of Combined Work/Quality Assurance Project Plans for Environmental Monitoring" (U.S. EPA 1984). In the present document, guidance is given for the following activities:

- Preparation for sampling
- Sample collection
- Sample processing
- Sample size
- Sample containers
- Sample preservation
- Sample holding times
- Sample shipping
- Logkeeping
- Labeling
- Custody procedures
- Analytical methods
- Calibration and preventive maintenance
- Quality control checks
- Corrective action
- Data reporting requirements.

FORMAT

This document is divided into two major sections: Effluent Monitoring and Monitoring of the Receiving Environment. This division was used because these two kinds of monitoring typically are not conducted by the same organization. For example, effluent sampling frequently is conducted by treatment plant personnel, whereas sampling of the receiving environment generally is conducted by outside contractors. Because of this possible separation, each major section of this report is designed to stand alone. Thus, effluent

TABLE 1. ENVIRONMENTAL VARIABLES INCLUDED IN THIS DOCUMENT

Variable	Effluent	Matrix: Receiving Water	Matrix: Seabed/ Sediment	Tissue
Flow	x			
pH	x	x		
Salinity		x		
Temperature	x	x		
Color		x		
Turbidity	x	x		
Transmissivity		x		
Transparency		x		
Total suspended solids	x	x		
Settleable solids	x	x		
Floating particulates	x	x		
Dissolved oxygen	x	x		
Biochemical oxygen demand	x	x	x	
Chemical oxygen demand			x	
Total chlorine residual	x			
Oil and grease	x	x	x	
Nitrogen (ammonia)	x	x		
Nitrogen (total Kjeldahl)	x	x		
Nitrogen (nitrate-nitrite)	x	x		
Phosphorus (total)	x	x		
Sulfides			x	
Priority pollutant metals	x		x	x
Priority pollutant organic compounds	x		x	x
Total and fecal coliform bacteria	x	x		
Enterococcus bacteria	x	x		
Chlorophyll *a*		x		
Phytoplankton		x		
Grain size			x	
Total solids			x	
Total volatile solids			x	
Total organic carbon			x	
Infauna			x	
Demersal fishes and epibenthic macroinvertebrates			x	

samplers will not have to sift through information relevant only to those who sample the receiving environment and vice versa. Although this independence of sections leads to some redundancy, its overall efficiency outweighs this drawback.

Within the effluent and receiving-environment monitoring sections, collection and analysis procedures are presented first for general sampling methods and then for specific environmental variables. General sampling method sections include procedures for 1) preparing for a survey, 2) collecting the samples from which subsamples will be taken for specific variables (e.g., effluent sampling, water sampling, grab sampling, trawl sampling), and 3) handling samples in the field (labeling, chain-of-custody, storage, shipping) and in the laboratory (reception, tracking, log keeping). Each section on sample handling also contains tables that summarize the recommended collection specifications and analytical methods for each environmental variable.

The collection and analysis procedures for specific environmental variables are organized to comply with most of the "elements of a QA project plan" described by U.S. EPA (1984). The following elements are addressed for each variable:

1. Field collection

2. Field processing

3. Analytical procedures

4. Calibration and preventive maintenance

5. Quality control checks

6. Corrective action

7. Data quality and reporting.

1.) The section on field collection describes the recommended container type, special cleaning procedures, and special collection techniques for each variable.

2.) In the field processing section, recommendations are made for the preservation technique and recommended maximum holding time before analysis.

3.) The section on analytical procedures identifies the method(s) recommended for laboratory analysis for each variable. The methods recommended in this document take precedence over those identified in Tetra Tech (1985c). To conform with U.S. EPA's equivalency policy, multiple methods were recommended for effluent and receiving water variables if they have been shown to produce equivalent results (U.S. EPA 1984). Multiple methods were confined to those approved by U.S. EPA (1979b, 1984) and the American Public Health Association (APHA 1985). Although other methods may provide equivalent results (e.g., American Society for Testing and Materials, U.S. Geological Survey) they generally were not recommended. However, if no U.S. EPA- or APHA-approved methods were available for a particular effluent or receiving-water variable, an alternate source of methods was used. Because no U.S. EPA- or APHA-approved methods are currently available for sediment and tissue variables, alternate sources of methods were used for all of these variables. In all cases, priority was given to methods that were developed under the guidance of U.S. EPA (e.g., Plumb 1981; Tetra Tech 1986a,b). Methods for collection and analysis of benthic infauna were described in considerably greater detail than those for other variables because of the importance of these organisms as indicators of sewage-related biological impacts and because of the lack of a published reference having adequate depth and scope. In addition to specifying the recommended analytical method(s), the section on analytical procedures describes the major sources of interference or error that may be encountered when using the methods. This kind of information was included because it often is incorporated into the method description without being highlighted and because some methods do not treat it as comprehensively as others.

4.) The section on calibration and preventive maintenance describes the kind and frequency of calibration and equipment maintenance that are essential to providing quality data for each variable.

5.) In the section on quality control checks, the kind and frequency of quality control checks (e.g., duplicates, blanks, spiked samples, reference material analyses) that should be conducted during laboratory analyses are described for each variable. A duplication level of 10 percent was considered appropriate for most variables. Blanks and spiked samples generally were recommended at a frequency of one per batch. It is recommended that duplicate analyses be distributed relatively evenly throughout the full sequence of samples analyzed, rather than being concentrated at the beginning or end of the sequence.

6.) The section on corrective action describes major sources of analytical errors that may be encountered when analyzing for each variable. Possible solutions also are recommended.

7.) The section on data quality and reporting describes documented levels of accuracy and precision (if available) achieved using the analytical method, the kinds of information that should be reported to U.S. EPA, and the units and significant figures that should be used when reporting results. Specifications in this section are compatible with the data requirements of the 301(h) program. Further guidance on the data reporting requirements is available in the "ODES Data Submissions Manual" (Tetra Tech and American Management Systems 1985).

Because this document considers a wide range of disciplines, the terminology used in certain sections may be unfamiliar to various readers. Therefore, a glossary is provided at the end of the document to define specialized words or phrases.

EFFLUENT MONITORING

Recommended methods for measuring effluent variables during 301(h) monitoring programs are described in this section. The initial major section includes general procedures for pre-sampling activities, sampling, and sample handling. The second major section presents detailed procedures for measuring 20 effluent variables. The general section on sample handling contains tables that summarize the recommended collection specifications and analytical methods for the specific effluent variables. Tables of recommended methods for metals and organic compounds in effluent are also presented in the appendix.

GENERAL METHODS

Sampling Preparation

The QA/QC Project Plan should be thoroughly reviewed in advance by sampling personnel to identify the following:

- Responsibilities for each individual associated with the sampling and analysis
- Statement and prioritization of study objectives
- Background information, sampling locations, sampling frequency, and sampling procedures
- Variables to be measured and corresponding required sample sizes, containers preservatives, and holding times
- Sample splits or performance samples to be submitted with the samples

- Laboratories to which samples will be shipped

- Shipping requirements.

The study objectives and their prioritization should be understood by all personnel involved in the sampling effort. This will ensure that if modifications of the plan become necessary, their impact on the overall goals of the sampling effort can be adequately evaluated.

To ensure that all required sampling equipment and supplies are available at the time of sampling an equipment checklist should be constructed. Spare parts and backup supplies (e.g., extra glass jars, spare pH probe) should be included in the inventory.

Sampling Procedures

Sample collection equipment, sampling frequency, and sample locations depend upon the size and nature of the discharge and generally are specified in the discharge permit. Decisions regarding equipment to be used during the monitoring program should be made after reviewing related literature (e.g., Tetra Tech 1982; U.S. EPA 1982). If automatic samplers are used for collection of flow-proportioned 24-h composite samples, the sampler should be selected on the basis of the analyses to be performed. The automatic sampler must be able to collect adequate sample sizes without introducing contaminants. For example, plastic tubing and bottles cannot be used to collect samples for priority pollutant organic compounds.

Grab samples, rather than composite samples, must be taken for certain variables (e.g., dissolved gases, volatile compounds, microbiological variables) because of changes that are likely to occur during storage. Effluent variables that must be collected as grab samples are pH, temperature, total and fecal coliform bacteria, dissolved oxygen, oil and grease, and volatile organic compounds. For further sample collection requirements, the section on field collection should be consulted for each variable. Note that certain variables (e.g., volatile organic compounds) require filling sample containers completely, leaving no air space, whereas other variables (e.g., total

and fecal coliform, oil and grease) require leaving air space (i.e., headspace) to allow for adequate mixing or addition of acid.

Sample Handling

Proper sample handling ensures that changes in the constituents of interest are minimized and guards against errors when collecting, shipping, and analyzing samples. Recommended sample size, container, preservation and storage requirements for each effluent variable are summarized in Table 2. Recommended laboratory methods for each effluent variable are listed in Table 3. These requirements are also noted in subsequent sections. These requirements and methods should be reviewed in advance by laboratory personnel to ensure that the sample size, containers, preservatives, and all other specifications are consistent with the needs and capabilities of the laboratory.

Field Procedures--

It is important throughout any sampling and analysis program to maintain the integrity of the sample from the time of collection to the point of data reporting. Proper chain-of-custody procedures allow the possession and handling of samples to be traced from collection to final disposition. It is recommended that chain-of-custody procedures be used for all sampling conducted during 301(h) monitoring programs. The documents needed to maintain proper chain-of-custody include:

- Field logbook -- All pertinent information on field activities and sampling efforts should be recorded in a bound logbook. The field supervisor is responsible for ensuring that sufficient detail is recorded in the logbook. The logbook should enable someone else to completely reconstruct the field activitiy without relying on the memory of the field crew. All entries should be made in indelible ink, with each page signed and dated by the author, and a line drawn through the remainder of any page. All corrections should consist of permanent line-out deletions that are initialed by the field supervisor. At a minimum, entries in a logbook should include:

TABLE 2. RECOMMENDED SAMPLE SIZES, CONTAINERS, PRESERVATION, AND HOLDING TIMES FOR EFFLUENT SAMPLES[a]

Measurement	Minimum Sample Size[b] (mL)	Container[c]	Preservative[d]	Maximum Holding Time
pH	25	P,G	None	Analyze immediately[e]
Temperature	1,000	P,G	None	Measure immediately[e]
Turbidity	100	P,G,	Cool, 4°C	48 h
Total suspended solids	1,000	P,G	Cool, 4°C	7 days
Settleable solids	1,000	P,G	Cool, 4°C	48 h
Floating particulates	5,000	P,G	None	Analyze immediately[e,f]
Dissolved oxygen				
Probe	300	G bottle & top	None	Analyze immediately[e]
Winkler	300	G bottle & top	Fix on site; store in dark	8 h
Biochemical oxygen demand	1,000	P,G	Cool, 4°C	48 h
Total chlorine residual	200	P,G	None	Analyze immediately[e]
Oil and grease	1,000	G only	Cool, 4°C H_2SO_4 to pH<2	28 days
Nitrogen				
Ammonia-N	400	P,G	Cool, 4°C H_2SO_4 to pH<2	28 days
Total Kjeldahl-N	500	P,G	Cool, 4°C H_2SO_4 to pH<2	28 days
Nitrate + Nitrite-N	100	P,G	Cool, 4°C H_2SO_4 to pH<2	28 days
Phosphorus (total)	50	P,G	Cool, 4°C H_2SO_4 to pH<2	28 days
Priority pollutant metals				
Mercury	100	P,G	HNO_3 to pH<2	28 days
Metals, except mercury	100	P,G	HNO_3 to pH<2	6 mo
Priority pollutant organic compounds				
Extractable compounds (includes phthalates, nitrosamines, organo chlorine pesticides, PCBs, nitroaromatics, isophorone, polynuclear aromatic hydrocarbons, haloether, chlorinated hydrocarbons, phenols, and TCDD)	4,000	G only, TFE-lined cap	Cool, 4° C 0.008% $Na_2S_2O_3$[g] Store in dark	7 days until extraction 40 days after extraction
Purgeable compounds	40	G only, TFE-lined septum	Cool, 4°C 0.008% $Na_2S_2O_3$[g]	7 days[h]

TABLE 2. (Continued)

Total and fecal coliform bacteria	250-500	P,G	Cool, 4° C 0.008% $Na_2S_2O_3$[g]	6 h
Enterococcus bacteria	250-500	P,G	Cool, 4° C 0.008% $Na_2S_2O_3$[g]	6 h

[a] Reference: Adapted from U.S. EPA (1979b, 1984).

[b] Recommended field sample sizes for one laboratory analysis. If additional laboratory analyses are required (e.g., replicates), the field sample size should be adjusted accordingly.

[c] Polyethylene (P) or Glass (G)

[d] Sample preservation should be performed immediately upon sample collection. For composite samples each aliquot should be preserved at the time of collection. When use of an automated sampler makes it impossible to preserve each aliquot, the samples should be maintained at ′ C until compositing.

[e] Immediately means as soon as possible after the sample is collected, generally within 15 min (U.S. EPA 1984).

[f] No recommended holding time is given by U.S. EPA for floating particulates. Analysis should therefore be made as soon as possible.

[g] Should only be used in the presence of chlorine residual.

[h] Holding time and preservation technique for purgeable compounds are based on the use of U.S. EPA Method 624 for screening all priority pollutant "volatiles," including acrolein and acrylonitrile. If analysis of acrolein and acrylonitrile is found to be of concern, a separate subsample should be preserved by adjusting the pH to 4-5 and the sample should then be analyzed by U.S. EPA Method 603.

TABLE 3. RECOMMENDED METHODS FOR MEASURING EFFLUENT VARIABLES

Variable	Method Reference		
	U.S. EPA[a]	APHA[b]	Other[c]
pH	150.1	423	-
Temperature	170.1	212	-
Turbidity	180.1	214A 214B	-
Total suspended solids	160.2	209C	-
Settleable solids	160.5	209E	-
Floating particulates	-	206A[d]	-
Dissolved oxygen			
Probe	360.1	421F	-
Winkler	360.2	421B	
Biochemical oxygen demand	405.1	507	-
Total chlorine residual	330.1 330.2 330.3 330.4 330.5	408A 408B 408C 408D 408E	-
Oil and grease	413.1	503A	
Nitrogen			
Ammonia-N	350.1 350.2 350.3	417A 417B 417D 417G	-
Total Kjeldahl-N	351.1 351.2 351.3 351.4	417B 417D 417E 420A 420B	
Nitrate+Nitrite-N	353.1 353.2 353.3	418C 418F	-

TABLE 3. (Continued)

Phosphorus (total)	365.1 365.2 365.3 365.4	424C 424F 424G	
Priority pollutant metals	Table 1B[e] U.S. EPA (1984)	Table 1B[e] U.S. EPA (1984)	-
Priority pollutant Organic compounds	Table 1C[e] U.S. EPA (1984)	Table 1C[e] U.S. EPA (1984)	
Total coliform bacteria	-	908A[f] 909A[g]	p. 114[f,h] p. 108[g,h]
Fecal coliform bacteria	-	908C[f] 909C[g]	p. 132[f,h] p. 124[g,h]
Enterococcus bacteria	-	-	U.S. EPA[i]

[a] Methods recommended in U.S. EPA (1979b).

[b] Methods recommended in APHA (1985).

[c] Methods recommended in sources other than U.S. EPA (1979) or APHA (1985) when no methods were recommended in the latter two sources.

[d] This method is tentatively recommended by APHA.

[e] The list of U.S. EPA and APHA methods for individual components of this group are listed in the table specified and are too extensive to include here.

[f] This method can be used whether or not chlorine is present.

[g] This method can be used only when chlorine is absent.

[h] Page reference of this method in Bordner et al. (1978).

[i] U.S. EPA is currently finalizing a recommended method for this variable.

- Date and time of starting work
- Names of field supervisor and team members
- Purpose of proposed sampling effort
- Description of sampling site, including information on any photographs that may be taken
- Location of sampling site
- Details of actual sampling effort, particularly deviations from standard operating procedures
- Field observations
- Field measurements made (e.g., pH, temperature, flow)
- Field laboratory analytical results
- Sample identification
- Type and number of samples collected
- Sample handling, packaging, labeling, and shipping information (including destination).

Chain-of-custody procedures should be maintained with the field logbook. While being used in the field, the logbook should remain with the field team at all times. Upon completion of the sampling effort, the logbook should be kept in a secure area. All logged information should be summarized and submitted to U.S. EPA after sampling is completed.

- Sample labels -- Sample labels must be waterproof and must be securely fastened to the outside of each sample container to prevent misidentification of samples. Labels should contain at least the sample number, preservation technique, date and time of collection, location of collection, and signature of the collector. Labels should be marked with indelible ink and placed on the body of the jar. Abbreviated labels may also be placed on the cap of each jar to facilitate sample identification.

- Chain-of-custody records -- A chain-of-custody record (Figure 1) must accompany every group f samples. Each person who has custody of the sample must sign the form and ensure that the samples are not left unattended unless secured properly.

- Custody seals -- Custody seals (Figure 2) are used to detect unauthorized tampering with the samples. Sampling personnel should attach seals to all shipping containers sent to the laboratory by common carrier. Gummed paper seals or custody tape should be used so that the seal must be broken when the container is opened.

For further information regarding proper chain-of-custody procedures, consult the policies and procedures manual for the National Enforcement Investigations Center (NEIC; U.S. EPA 1978).

Sample Shipment--

All preserved samples should be shipped immediately after completion of sampling. This minimizes the number of people handling samples, and protects sample quality and security. Guidance for shipping hazardous materials can be found in U.S. Department of Transportation (1984). As samples are prepared for shipping, the following should be kept in mind:

EPA

United States
Environmental Protection
Agency

Region 10
1200 Sixth Avenue
Seattle WA 98101

CHAIN OF CUSTODY RECORD

PROJECT				SAMPLERS: (Signature)							
LAB #	STATION	DATE	TIME	SAMPLE TYPE						NUMBER OF CONTAINERS	REMARKS
				WATER	SEDIMENT	TISSUE	AIR	OIL	OTHER		

RELINQUISHED BY: (Signature)	RECEIVED BY: (Signature)	DATE/TIME
RELINQUISHED BY: (Signature)	RECEIVED BY: (Signature)	DATE/TIME
RELINQUISHED BY: (Signature)	RECEIVED BY: (Signature)	DATE/TIME
RELINQUISHED BY: (Signature)	REC'V'D BY MOBILE LAB FOR FIELD ANAL.: (Signature)	DATE/TIME

DISPATCHED BY: (Signature)	DATE/TIME	RECEIVED FOR LAB BY: (Signature)	DATE/TIME

METHOD OF SHIPMENT:

Distribution Original – Accompany Shipment
One Copy – Survey Coordinator Field Files

Figure 1. An example of a chain-of-custody record. An equivalent form should be used for 301(h) monitoring.

U.S. ENVIRONMENTAL PROTECTION AGENCY
CLP Sample Management Office
P.O. Box 818 - Alexandria, Virginia 22313
Phone: 703/557-2490 - FTS/557-2490

SAS Number

SPECIAL ANALYTICAL SERVICE
PACKING LIST

Sampling Office:	Sampling Date(s):	Ship To:	For Lab Use Only
Sampling Contact: (name)	Date Shipped:		Date Samples Rec'd:
(phone)	Site Name/Code:	Attn:	Received By:

Sample Numbers	Sample Description i.e., Analysis, Matrix, Concentration	Sample Condition on Receipt at Lab
1.		
2.		
3.		
4.		
5.		
6.		
7.		
8.		
9.		
10.		
11.		
12.		
13.		
14.		
15.		
16.		
17.		
18.		
19.		
20.		
		For Lab Use Only

EPA CUSTODY SEAL

ENVIRONMENTAL PROTECTION AGENCY	SAMPLE NO.	DATE
	SIGNATURE	
	PRINT NAME AND TITLE (Inspector, Analyst or Technician)	

EPA Form 7208-3 (10-79)

Figure 2. Examples of a sample analysis request form (above) and a custody seal (below). Equivalent material should be used for 301(h) monitoring.

- Shipping containers should be in good shape and capable of withstanding rough treatment during shipping.

- Samples should be packed tightly:

  - Dividers must separate all glass containers

  - Empty space within shipping boxes should be filled so that jars are held securely.

- All containers must be leak-proof. If a container is not leak-proof by design, the interior should be lined with two heavy-duty plastic bags and the tops of bags should be tied once samples are inside. Adequate absorbent material should be placed in the container in a quantity sufficient to absorb all of the liquid shipped.

- All samples should be accompanied by a sample analysis request. Variables to be analyzed by the laboratory, and total number and kind of samples shipped for analysis should be listed on the request sheet. An example sample analysis request form is illustrated in Figure 2. The laboratory should acknowledge receipt of shipment by signing and dating the form, and returning a copy to the designated QA coordinator.

- A chain-of-custody record for each shipping container should be filled out completely and signed.

- The original chain-of-custody record and analysis request should be protected from damage and placed inside the shipping box. A copy of each should be retained by the shipping party.

- The custody seal should be attached so that the shipping box cannot be opened without breaking the seal.

- For shipping containers carrying liquid samples:

  - A "This End Up" label should be attached to each side to ensure that jars are transported in upright position

  - A "Fragile-Glass" label should be attached to the top of the box to minimize agitation of samples.

- Shipping containers should be sent by a carrier that will provide a delivery receipt. This will confirm that the contract laboratory received the samples and serve as a backup to the chain-of-custody record.

- All shipping charges should be prepaid by the sender to avoid confusion and possible rejection of package by the contract laboratory.

Laboratory Procedures--

At the laboratory, one person should be designated custodian of all incoming samples. An alternate should also be designated to serve in the custodian's absence. The custodian should oversee the following activities:

- Reception of samples

- Maintenance of chain-of-custody records

- Maintenance of sample tracking logs

- Distribution of samples for laboratory analyses

- Sending samples to outside laboratories

- Supervision of labeling, log keeping, data reduction, and data transcription

- Storage and security of all samples, data, and documents.

Upon reception of samples, a designated laboratory person should fill out the chain-of-custody record, indicating time and date of reception, number of samples, and condition of samples. All irregularities indicating that sample security or quality may have been jeopardized (e.g., evidence of tampering, loose lids, cracked jars) should be noted on the sample analysis request form and returned to the client-designated QA coordinator. In addition, a designated person should initiate and maintain a sample-tracking log that will follow each sample through all stages of laboratory processing and analysis. Minimum information required in a sample-tracking log includes:

- Sample identification number

- Location and condition of storage

- Date and time of each removal from and return to storage

- Signature of person removing and returning the sample

- Reasons for removal from storage

- Final disposition of sample.

All logbooks, labels, data sheets, tracking logs, and custody records should have proper identification numbers and be filled out accurately. All information should be written in ink. Corrections should be made by drawing a line through the error and entering the correct information. Corrections should be signed and dated. Accuracy of all data reductions and transcriptions should be verified at least twice. All samples and documents should be properly stored within the laboratory until the client authorizes their removal. Security and confidentiality of all stored material should be maintained at all times. Before releasing analytical results,

all information on sample tags, data sheets, tracking logs, and custody records should be cross-checked to ensure that data pertaining to each sample are consistent throughout the record.

Originals of the following documents should be sent to the client:

- Chain-of-custody records
- Sample-tracking logs
- Data report sheets
- Quality control records.

Copies of all forms should be retained by the laboratory in case originals are lost in transit.

When replicate analyses are conducted as QA/QC checks, it is recommended that they be distributed relatively evenly throughout the full sequence of samples analyzed, rather than being concentrated at some point (e.g., beginning, end) of the sequence. This precaution will enhance the probability that if problems develop within part of a sequence, they will be detected.

EFFLUENT ANALYSES

In this section, QA/QC procedures are presented for the following 20 effluent variables:

- Flow
- pH
- Temperature
- Turbidity
- Total suspended solids
- Settleable solids
- Floating particulates
- Dissolved oxygen (Winkler method)
- Dissolved oxygen (probe method)
- Biochemical oxygen demand (BOD)
- Total chlorine residual
- Oil and grease
- Nitrogen (ammonia)
- Nitrogen (total Kjeldahl)
- Nitrogen (nitrate-nitrite)
- Phosphorus (total)
- Priority pollutant metals
- Priority pollutant organic compounds
- Total and fecal coliform bacteria
- Enterococcus bacteria.

Flow

Accurate flow measurement is essential for proper operation and control of wastewater treatment plants. Flow determinations are used for a variety of purposes, including 1) provision of data with which plant operation and performance can be evaluated, 2) provision of data for long-term planning of treatment plant capacity relative to utilized control capacity, and 3) determination of compliance with permitted effluent mass-loading limits.

Flow can be measured *in situ* using a variety of methods. The two major categories of methods are direct-discharge and velocity-discharge (Metcalf and Eddy 1979). The direct-discharge methods are used most frequently for measuring wastewater flows. These methods relate the rate of discharge to one or two easily measured variables and employ such devices as weirs, Parshall flumes, Venturi meters, and magnetic flow meters. Accuracy of these direct-discharge methods generally ranges from ±3 to ±5 percent of the flow rate (Hinrichs 1979). Any system that cannot measure wastewater flow within ±10 percent is considered unacceptable for NPDES compliance (U.S. EPA 1977).

The preferred location for a flow-measuring device is at the end of all treatment processes and downstream from all sidestreams. If the device is located at the head of the treatment process, the flow must be corrected for all return streams that originally discharged upstream from the flow-measuring device. For continuous flow measurements, a system including the primary flow device, a flow sensor, transmitting equipment, a recorder, and possibly a totalizer are recommended.

Flow-measuring equipment should be routinely inspected, calibrated, and maintained to ensure that accurate data are produced. At a minimum, equipment should be serviced according to the frequency recommended by the manufacturer. Servicing should be more frequent if the equipment does not appear to be functioning properly. A common cause of improper equipment operation is accumulation of foreign material in or on equipment components.

Effluent
Flow

Flow should be reported as millions of gallons per day (MGD). Where continuous monitoring of an effluent is required, flow measurements should include the total daily flow and the peak daily flow on a 24-h basis.

pH

Field Procedures--

Collection--Samples for pH determination should be collected in polyethylene or glass bottles having airtight screw caps. Because pH is unstable and cannot be preserved, these samples should be analyzed as soon as possible after collection. Because pH of waters not at equilibrium with the atmosphere may change upon exposure to the atmosphere, sample containers should be completely filled and tightly sealed after collection.

Prior to filling, each sample bottle and cap should be rinsed thoroughly with sample water. This can be achieved by filling the bottle halfway, sealing and shaking it, and rinsing the stopper as the wash water is discarded.

Processing--Because pH cannot be preserved, samples should be analyzed immediately after collection. If a short delay occurs, the samples should be stored in the dark at 4° C and the storage time should be noted on the log sheet.

Laboratory Procedures--

Analytical Procedures--Analytical procedures are given in U.S. EPA Method 150.1 and APHA Method 423. As noted previously, pH samples should be analyzed as soon as possible following collection.

Several potential sources of interference with pH measurements should be avoided. Because the response of the electrode can be impaired if it is coated with oily or particulate material, the electrode should be gently blotted or washed with a detergent periodically. Treatment with hydrochloric acid may be necessary to remove some kinds of film. Temperature can influence pH measurements by altering electrode output and by changing the pH inherent in the sample. The first source of temperature interference can be controlled by using a pH meter having temperature compensation or by calibrating the

meter at the temperature of the samples. Because the second source of temperature interference cannot be controlled, the temperature at which the pH determination of each sample is made should be logged and reported. It is recommended that sample temperature never differ by more than 2° C from that of the buffer solution.

When pH measurements are being made, it is critical that the sample be stirred at a constant rate to provide drift-free (<0.1 pH units) measurements. The rate of stirring should minimize air transfer at the surface of the sample. At least 30 sec should be allowed for each measurement to stabilize.

Calibration and Preventive Maintenance--Calibration procedures should follow specifications given by the manufacturer of the pH meter. General guidelines are given by U.S. EPA (1979b) and APHA (1985).

Primary buffer salts should be those of the National Bureau of Standards (NBS). Secondary buffer salts can be prepared from the NBS salts or purchased as a solution that has been calibrated to NBS salts. The pH meter should be calibrated at a minimum of two points that bracket the expected pH value of the samples and that are three or more pH units apart (U.S. EPA 1979b). Prepare fresh buffer solutions at least every month to avoid erroneous calibration due to mold growth or contamination.

Preventive maintenance procedures should follow specifications given by the manufacturer of the pH meter. In general, verification of electrode performance and meter performance is the only operator service recommended. An electrode should be replaced when it no longer meets span requirements and does not improve with rejuvenating procedures.

Quality Control Checks--The pH meter should be calibrated at the beginning of each series of samples and after each group of 10 successive measurements. It is recommended that duplicate pH determinations be made on at least

10 percent of the total number of samples. As an independent check, a U.S. EPA reference sample should be analyzed at a minimum of every 3 mo.

Corrective Action--If the pH meter does not appear to be operating correctly, consult the manufacturer's troubleshooting guide. Common problems include a dirty electrode, failure to fill the reference portion of the electrode with internal solution, and inadequate stirring.

Data Quality and Reporting--A precision of ± 0.02 pH unit and an accuracy of 0.05 pH unit can be achieved under the best circumstances. However, the limit of accuracy under most circumstances is ± 0.1 pH unit (APHA 1985). A precision of 0.1 pH unit is considered acceptable (U.S. EPA 1979b).

Measurements of pH are reliable only when the instrument has been calibrated by standard buffers bracketing the desired range. Samples having a pH greater than 10 may require a special probe to correct for interference from sodium ions.

It is recommended that pH values be reported to the nearest 0.1 unit. In addition, the ambient temperature at the time of measurement of each sample should be reported to the nearest degree C. The results of all determinations should be reported, including QA replicates. Any factors that may have influenced sample quality should also be reported.

Temperature

Field Procedures--

Collection--Temperature can be measured using a mercury-filled Celsius thermometer on samples collected in glass or plastic containers. The thermometer should have a scale etched on capillary glass for 0.1° C increments and a minimal thermal capacity to permit rapid equilibration. Temperature can be measured *in situ* using a reversing thermometer or a thermistor. Of these two *in situ* instruments, the thermistor is more accurate, but also more expensive.

Processing--Because temperature can change rapidly after a sample is removed from ambient conditions, temperature determinations by thermometer should be made immediately after sample collection.

Laboratory Procedures--

Analytical Procedures--Methods for making temperature measurements are described in U.S. EPA Method 170.1 and in APHA Method 212. It is critical that the measuring device be adequately immersed in the sample and allowed to completely equilibrate (i.e., the temperature reading stabilizes) before temperature is read.

Calibration and Preventive Maintenance--Each kind of temperature-measuring instrument should be calibrated frequently against a National Bureau of Standards (NBS)-certified thermometer that is used with its certificate and correction chart. An NBS thermometer is recommended because some commercial thermometers may be as much as 3° C in error (APHA 1985).

To prevent breakage, it is recommended that each thermometer be enclosed in a metal case. If a mercury thermometer is broken, samples or bottles in the vicinity of the exposed area may be contaminated by the mercury.

Quality Control Checks--Each temperature-measuring instrument should be calibrated against an NBS thermometer at least every week. It is recommended that calibration should be conducted daily when a temperature violation is suspected.

Corrective Action--If the temperature-measuring instrument cannot be calibrated consistently against the NBS thermometer, it should be repaired or replaced.

Data Quality and Reporting--Precision and accuracy have not been determined for temperature measurements (U.S. EPA 1979b). Temperature measurements should be reported to the nearest 0.1° C. The results of all determinations should be reported, including QA replicates and calibration checks. Any factors that may have influenced sample quality should also be reported.

Turbidity

Field Procedures--

Collection--Turbidity samples can be collected in glass or plastic containers. Samples should be removed from the sampler as soon as possible after collection to minimize settling of suspended material within the sampler. Sample containers and lids should be rinsed thoroughly with sample water before samples are collected.

Processing--Because turbidity samples cannot be preserved adequately, they should be analyzed as soon as possible after collection. If a delay occurs, samples should be held at 4° C for no more than 48 h to minimize microbiological decomposition of solids. The length of delay should be noted on the log sheet.

Laboratory Procedures--

Analytical Procedures--Two procedures are available for turbidity measurements in effluent: the nephelometric method and the visual method (APHA 1985). Although the results of both methods are comparable in a general manner (U.S. EPA 1979b), they are not related directly (AHPA 1985) and therefore should not be used interchangeably. Because of its greater precision, sensitivity, and applicability over a wide turbidity range, the nephelometric method is generally preferable to the visual method (APHA 1985).

The nephelometric method is based on the nephelometric turbidity unit (NTU), and is described in U.S. EPA Method 180.1 and in APHA Method 214A. For turbidities greater than 40 NTU, samples should be diluted with one or more volumes of turbidity-free water until the turbidity falls below 40 NTU.

The visual method of turbidity determination is based on the Jackson turbidity unit (JTU), and is described in APHA Method 214B. It currently is the method specified by the California Ocean Plan. The lowest turbidity that can be measured using a candle turbidimeter is 25 JTU (APHA 1985). Samples with turbidity values less than 25 JTU must be estimated indirectly by visual comparison with standards. Samples having turbidity values exceeding 1,000 JTU should be diluted with one or more volumes of turbidity-free water until turbidity falls below 1,000 JTU.

Turbidity-free water is distilled water passed through a membrane filter having a pore size of 0.2 um. Prior to analysis, each sample should be shaken well to thoroughly disperse solids and resulting air bubbles should be allowed to dissipate before the sample is analyzed.

Interference with turbidity measurements arises from several sources. The presence of floating debris and coarse sediments that settle out rapidly will give low readings. Therefore, turbidity readings should be made as soon as possible after sample agitation. Finely divided air bubbles will affect results in a positive direction. If present, the bubbles should be allowed to dissipate before taking the reading. Finally, dissolved substances in the sample, which absorb light, will reduce turbidity readings. Any color in the sample should therefore be noted.

Calibration and Preventive Maintenance--It is recommended that standard suspension of formazin be used to calibrate the nephelometer. Formazin provides a more reproducible turbidity standard than do other materials used in the past. The formazin standard suspension should be prepared daily (APHA 1985). Commercially available standards, such as styrene divinylbenzene beads (trade name AMCO-AEPA-1), can be substituted for formazin if they are demonstrated to be equivalent to freshly prepared formazin (APHA 1985). Standards measured on the nephelometer should cover the range expected for the samples. At least one standard should be run in each instrument range to be used. The instrument should give stable readings

in all sensitivity ranges used. If a precalibrated scale is not supplied, calibration curves should be prepared for each instrument range to be used.

Standards for visual comparisons based on JTU should be prepared from natural turbid water or kaolin, and should be calibrated weekly using the candle turbidimeter. The candle used in the turbidimeter should be made of beeswax and spermaceti, and should burn within the limits of 114-126 grains/h.

Quality Control Checks--The nephelometer should be calibrated at the start of each series of analyses and after each group of 10 successive samples. Duplicate analyses should be conducted on at least 10 percent of the total number of samples, using either method of turbidity determination.

Corrective Action--If the nephelometer will not stabilize in any of the relevant ranges or if the instrument does not appear to be functioning properly in any other aspect, the manufacturer's troubleshooting guide should be consulted. Sample tubes that become scratched or etched should be replaced.

Data Quality and Reporting--Limited precision data for the nephelometric method indicate that standard deviations of measurements vary directly with the level of turbidity (U.S. EPA 1979b). Accuracy data are not available at present. The sensitivity of the nephelometer should allow detection of a turbidity difference of 0.02 unit or less in waters having turbidities less than 1.0 unit. Results should be reported in nephelometric turbidity units (NTU). U.S. EPA Method 180.1 and APHA Method 214A describe the nearest reporting units as a function of the range of values measured.

Results of analyses using visual comparisons should be reported in Jackson turbidity units (JTU). APHA Method 214B describes the nearest reporting units as a function of the range of values measured. The method used to determine each JTU value (i.e., candle turbidimeter or bottle standards) should be identified.

Results of all turbidity determinations should be reported, including QA replicates. Any factors that may have influenced sample quality should also be reported.

Total Suspended Solids

Field Procedures--

Collection--Samples should be collected in glass or plastic bottles. Nonrepresentative particulates, such as leaves, sticks, or rocks, should be noted and excluded from the sample analysis.

Processing--Total suspended solids samples cannot be preserved adequately and should therefore be analyzed as soon as possible after collection (APHA 1985). If a delay occurs, samples should be held at 4° C to minimize microbiological decomposition of solids. The length of delay should not exceed 7 days and should be noted on the log sheet.

Laboratory Procedures--

Analytical Procedures--Suspended solids determination should be made according to procedures described in U.S. EPA Method 160.2 or APHA Method 209C. The drying temperature of the filtered residue can influence results because temperature and length of heating affect weight losses due to volatilization of organic matter, mechanically occluded water, water of crystallization, and gasses from heat-induced chemical decomposition, as well as weight gains due to oxidation (APHA 1985). Thus, drying temperature must be carefully controlled and not allowed to deviate from the recommended range of 103-105° C.

To avoid contamination, filters should be handled using forceps during all steps from initial to final weight determinations. Filters should be washed with distilled water and dried prior to initial weight determination. Because glass-fiber filters are hygroscopic, they must be stored in a desiccator when cooling. When filtering the samples, it is critical that the filter is seated tightly on the surface of the filtration apparatus and that all holes in the crucible are covered. To ensure complete removal of salts after filtering the sample, the filter should be rinsed with a minimum of three successive 20-mL portions of distilled water. It is recommended

that enough water be filtered to ensure that at least 5 mg of residue is collected. Because excessive residue on the filter may form a water-entrapping crust, the sample size should be limited to that which yields less than 200 mg of residue (APHA 1985). Prolonged filtration times resulting from filter clogging may produce high results due to excessive solids capture on the clogged filter. Therefore, filtering should be terminated before any evidence of clogging is noted.

Calibration and Preventive Maintenance--The analytical balance should be calibrated weekly using standard weights, according to the manufacturer's instructions. It is recommended that the balance have a minimum accuracy of 0.1 mg. The manufacturer's preventive maintenance procedures should be followed carefully.

Quality Control Checks--For each weight determination, filters should be run repeatedly through the drying/cooling cycle until the weight loss is less than 4 percent of the previous weight or 0.5 mg, whichever is less (APHA 1985). Duplicate analyses should be conducted on at least 10 percent of the total number of samples. U.S. EPA reference samples should be analyzed quarterly to check the overall accuracy of the method.

Corrective Action--If the analytical balance will not produce repeatable measurements at 0.1 mg, the manufacturer's troubleshooting guide should be consulted. If the filter becomes clogged during filtration, it should be discarded and the analysis should be repeated using a clean filter. To prevent clogging of the second filter, the volume of sample analyzed should be reduced.

A filter blank should be carried through the preparation, drying, and desiccation steps to monitor any changes in filter tare weight. If the filter weight is not consistent after drying and cooling, the desiccant should be checked. A color-indicating desiccant is recommended, so that spent desiccant is easily detected. Also, the seal on the desiccator should be checked and, if necessary, ground glass rims should be greased or "O"

rings replaced. Cooling should be closely timed, so that weighing times are consistent between batches of samples, thereby minimizing the need for multiple weighings.

Data Quality and Reporting--Precision of results varies directly with the concentration of suspended matter and, at low levels, the ratio of the weight of the suspended matter to the weight of the filter. There are no procedures for determining the accuracy of field measurements of suspended matter. Total suspended solids measurements should be reported as mg/L to a minimum of two significant figures. Results of all determinations should be reported, including QA replicates. Any factors that may have influenced sample quality should also be reported.

Settleable Solids

Field Procedures--

Collection--Settleable solids samples should be collected in 1-L glass or plastic containers. The sample container selected for use should be checked to ensure that material in suspension does not adhere to the container walls. Nonrepresentative particulates, such as leaves, sticks, or rocks, should be noted and excluded from sample analysis.

Processing--Settleable solids samples cannot be preserved adequately and should therefore be analyzed as soon as possible after collection (APHA 1985). If a delay occurs, samples should be held at 4o C to minimize microbiological decomposition of solids. The length of delay should not exceed 48 h and should be noted on the log sheet.

Laboratory Procedures--

Analytical Procedures--Procedures used to determine settleable solids concentrations are presented in U.S. EPA Method 160.5 and in APHA Method 209E. The sample should be well-mixed before introduction to the Imhoff cone. It is critical that floating material is not included with settleable material.

Calibration and Preventive Maintenance--Not applicable.

Quality Control Checks--Duplicate analyses should be conducted on at least 10 percent of the total number of samples.

Corrective Actions--If suspended material is found to adhere to the sides of the sample collection containers, a different type of container should be used.

Data Quality and Reporting--The practical lower limit of measurement depends on sample composition and generally is in the range of 0.1 to 1.0 mL/L (APHA 1985). Precision and accuracy data are not available at present. Settleable solids concentrations should be reported as mL/L to a minimum of two significant figures. Results should be reported for all determinations, including QA replicates. Any factors that may have influenced sample quality should also be reported.

Floating Particulates

Field Procedures--

Collection--A minimum of 5 L of sample should be collected in a glass or plastic container. The container should be rinsed thoroughly with sample water before sample collection, as no preservation techniques are available for this variable.

Processing--For comparable results, samples must be treated uniformly throughout sampling and handling. Analysis should be performed as soon as possible after sample collection, as no preservation techniques are available for this variable.

Laboratory Procedures--

Analytical Procedures--Floating particulates should be analyzed in accordance with APHA Method 206A. At present, this method is tentatively recommended by APHA. Because even slight differences in sampling and handling can give large differences in measureable floating particulates, all samples should be treated uniformly, preferably by adequately mixing them before flotation. When mixing the sample, care should be taken to avoid extensive air entrapment through formation of a large vortex. Because temperature variations can affect results, all tests should be conducted at a constant temperature, preferably 20° C.

Calibration and Preventive Maintenance--No calibration procedures apply to the recommended method. To prevent oil and grease from sticking to the analytical equipment, all internal surfaces should be coated with TFE.

Quality Control Checks--It is recommended that duplicate analyses be conducted on a minimum of 5 percent of the total number of samples, with an additional 5 percent of the samples checked for recovery.

Corrective Actions--If oil and grease appear to be sticking to surfaces, TFE coatings should be renewed. If recovery drops below 90 percent, samples should be analyzed again and each step of the analysis carefully scrutinized.

Data Quality and Reporting--The minimum detectable concentration of floating particulates using the recommended method is 1 mg/L. Precision varies with the concentration of suspended matter in the sample. A coefficient of variation of 5.7 percent has been achieved using five replicate samples (APHA 1985). Although there is no completely satisfactory procedure for determining the accuracy of the method, approximate recovery can be determined by running a second test for floatables on all water discharged throughout the analytical procedures, except for the last 10 mL. Typical recoveries exceed 90 percent (APHA 1985). Concentrations of floating particulates should be reported in mg/L to the nearest 0.1 unit. Results for all determinations should be reported, including QA replicates and recovery checks. Any factors that may have influenced sample quality should also be reported.

Dissolved Oxygen (Winkler Method)

Field Procedures--

Collection--Prior to sample collection, the fixing reagents should be prepared and the dispensing apparatus should be filled. The accuracy of the volumes being dispensed should be checked and no air should be trapped in the system. It is recommended that 300-mL glass BOD bottles having ground glass stoppers be used for the Winkler method. Becaus· chlorine interferes with the Winkler method, samples should be taken a a point prior to chlorination.

Grab samples for dissolved oxygen should be collected very carefully to avoid aeration and they should be preserved as soon as collected. Composite sampling for dissolved oxygen is not possible. If possible, sample from a tap by attaching a soft-walled rubber tube to the tap and extend the tube to the bottom of the sample bottle. The tubing should be flushed with sample water to remove air bubbles, and the bottle and stopper should be rinsed at least three times with sample water. The bottle should be filled slowly until at least half full, and then filled rapidly. At least one full bottle volume of sample should overflow the bottle before the tubing is removed, slowly. After the tubing is removed, the stopper should be carefully put in place with a twisting motion while water is displaced from the bottle. Once stoppered, the sample should be checked for air bubbles. If bubbles are present, the sample should be discarded and a new sample collected. Fixing solutions should be added to each sample immediately after collection.

Processing--The stopper should be carefully removed from the bottle without agitating the sample. Each fixing reagent should be added by gently placing the tip of the pipet slightly below the surface of the sample and gently pushing the plunger. The plunger should not be released until the pipet has been removed from the sample. The pipet tip should be rinsed with distilled water before being returned to the reagent bottle.

After the fixing reagents have been added, the bottle should be carefully stoppered without introducing air bubbles. Excess fluid around the outside of the stopper should be poured off and the sample bottle should be inverted 5-10 times to thoroughly disperse the precipitate. It is also a good practice to invert bottles several times approximately 20 min after fixation, to ensure thorough dispersion of the precipitate.

After allowing the precipitate to settle for 10-15 minutes, the stopper should be removed and sulfuric acid should be added to the sample in the same manner as the fixing reagents. The stopper should then be replaced and the bottle inverted until all of the precipitate has dissolved. If the precipitate fails to dissolve, it should be allowed to settle again and additional sulfuric acid should be added to the sample. It is critical that all of the precipitate be dissolved before samples are stored. Also, it is critical that samples not be allowed to stand longer than 8 h before sulfuric acid is added, as erroneous measurements may result.

Preserved dissolved oxygen samples should be stored in the dark at 10-20° C. Samples should be analyzed as soon as possible after collection, and storage time should not exceed 8 h. The length of storage should be recorded on the log sheet.

Laboratory Procedures--

Analytical Procedures--The modified Winkler method is described in detail in U.S. EPA Method 360.2 and in APHA Method 421B.

Calibration and Preventive Maintenance--Methods of standardizing the thiosulfate solution are presented by U.S. EPA (1979b). It is recommended that one person perform the standard and sample titrations because of subjectivity in the color of the endpoint.

Preventive maintenance is limited to ensuring that reagent dispensing and titrating equipment is clean and functions properly.

Quality Control Checks--All standard titrations should be duplicated. It is recommended that duplicate analyses be conducted on at least 10 percent of all samples. Reagent blanks should be run whenever a reagent is changed.

Corrective Action--If the results obtained by running duplicate standard titration of the thiosulfate solution do not agree within ±0.05 mL, the titrations should be repeated until agreement is achieved. All reagent dispensers should be checked for bubbles, and the amounts of reagents delivered should be verified.

Data Quality and Reporting--Using the modified Winkler method, reproducibility for field samples is approximately 0.2 mg/L of dissolved oxygen at the 7.5 mg/L level (U.S. EPA 1979b). Duplicate titrations made during standardization of reagents should agree within ±0.05 mL. With careful collection and treatment of samples, dissolved oxygen as low as 1 percent of saturation can be measured. Dissolved oxygen concentrations should be reported in mg/L to the nearest 0.1 unit. Results should be reported for all determinations, including QA replicates and reagent blanks. Any factors that may have influenced sample quality should also be reported.

Dissolved Oxygen (Probe Method)

Field Procedures--

Collection--Grab samples for dissolved oxygen should be collected very carefully to avoid aeration. Composite sampling for dissolved oxygen is not possible. If possible, sample from a tap by attaching a soft-walled rubber tube to the tap and extend the tube to the bottom of the sample bottle. The tubing should be flushed with sample water to remove air bubbles, and the bottle and stopper rinsed at least three times with sample water. The bottle should be filled slowly until at least half full, and then filled rapidly. At least one full bottle volume of sample should overflow the bottle before the tubing is removed slowly. After the tubing is removed, the stopper should be carefully put in place with a twisting motion while water is displaced from the bottle. Once stoppered, the sample should be checked for air bubbles. If bubbles are present, the sample should be discarded and a new sample collected.

Processing--Because no reagents are used to preserve the oxygen samples, analyses should be conducted immediately after collection. If a delay occurs, it should be noted on the log sheet.

Laboratory Procedures--

Analytical Procedures--Detailed analytical procedures should be provided by the manufacturer of the dissolved oxygen meter. General procedures are listed in U.S. EPA Method 360.1 and APHA Method 421F.

Several precautions should be taken when making measurements with a membrane electrode. First, constant turbulence should be provided by a stirrer to ensure precise measurements. Second, adequate time should be allowed for the instrument to warm up before measurements are started, and, as individual samples are analyzed, the probe should be allowed to

stabilize to sample temperature and dissolved oxygen. Third, reactive gases, such as chlorine and hydrogen sulfide, pass through the membrane probes and may interfere with the analysis or desensitize the probe. Finally, broad variations in the kinds and concentrations of salts in samples can influence the partial pressure of oxygen in samples and thereby affect measurement accuracy.

Calibration and Preventive Maintenance--Calibration procedures should follow the instructions given by the manufacturer of the dissolved oxygen meter. The meter generally can be calibrated using one of three methods: Winkler titration, saturated water, or air. The air method is simplest and quite reliable. Overall error is diminished when the probe and instrument are calibrated under conditions of temperature and dissolved oxygen that match those of the samples. Calibration can be disturbed by physical shock, touching the membrane, or desiccation of the electrolyte.

Preventive maintenance procedures should follow the manufacturer's recommendations. The oxygen probe should always be stored in a humid environment to prevent drying out and the need to frequently replace membranes.

Quality Control Checks--The instrument should be calibrated at the beginning of each series of measurements and after each group of 10 successive samples. Duplicate measurements should be made on at least 10 percent of the total number of samples.

Corrective Action--If the dissolved oxygen meter does not appear to be operating correctly, consult the manufacturer's troubleshooting guidelines for remedial actions.

Data Quality and Reporting--Repeatability of dissolved oxygen measurements using a membrane electrode should be 0.1 mg/L and accuracy should be $\pm$ 1 percent (U.S. EPA 1979b). Sensitivity of the electronic readout meter for the output from the dissolved oxygen probes should normally be 0.05 mg/L

(U.S. EPA 1979b). Dissolved oxygen concentrations should be reported in mg/L to the nearest 0.1 unit. Results should be reported for all determinations, including QA replicates. Any factors that may have influenced sample quality should also be reported.

Biochemical Oxygen Demand (BOD)

Field Procedures--

Collection--BOD samples can be collected in glass or plastic containers. Sample containers and caps should be rinsed thoroughly with sample water before sample collection.

Processing--BOD samples should be analyzed immediately after collection. If a delay occurs, samples should be refrigerated at 4° C to minimize reduction of BOD. Samples should not be stored for more than 48 h and the length of storage should be recorded on the log sheet. Refrigerated samples should be warmed to 20° C prior to analysis.

Laboratory Procedures--

Analytical Procedures--BOD concentrations should be determined according to U.S. EPA Method 405.1 or APHA Method 507. Samples having more oxygen-demanding materials than the amount of oxygen in air-saturated water should be diluted to balance the oxygen demand and supply. If samples are diluted, nutrient addition (i.e., nitrogen, phosphorus, trace metals) and pH buffering of the dilution water are necessary to ensure that the sample is suitable for bacterial growth. To prevent air from infiltrating the incubation bottles, a water seal should be used. When samples are incubating, all light should be excluded to prevent photosynthetic production of oxygen. Samples containing caustic alkalinity or acidity should be neutralized to pH 6.5-7.5 using sulfuric acid or sodium hydroxide. Samples containing residual chlorine must be dechlorinated (e.g., using sodium thiosulfate).

Calibration and Preventive Maintenance--Dissolved oxygen concentrations should be measured on all dilution water blanks and seed controls. The dissolved oxygen uptake of the dilution water should not exceed 0.2 mg/L. The dissolved oxygen uptake of seeded dilution water should be between 0.6 and 1.0 mg/L. A glucose-glutamic acid standard check solution should

be incubated with each batch of samples. Dissolved oxygen measurements should be calibrated according to accepted procedures (e.g., see descriptions of the Winkler and probe methods in this document).

Quality Control Checks--The dilution water blank provides a quality control on the dilution water as well as on the cleanliness of analytical equipment (e.g., incubation bottles). Each sample should be analyzed at a minimum of three different dilutions to ensure that dissolved oxygen uptake is in the optimal range. Optimal dissolved oxygen uptake is at least 2 mg/l after the incubation, with a residual dissolved oxygen of at least 1 mg/L in the sample. Duplicate analyses should be conducted on at least 10 percent of the total number of samples.

APHA (1985) should be consulted for methods of correcting for the many kinds of interference that may accompany BOD analyses.

Corrective Action--If the dilution water blanks exceed 0.2 mg/L, cleanliness of containers and water should be checked. Containers may require 1+1 HCl rinse after detergent washing to remove any residual organic material. Containers rinsed with acid should be thoroughly rinsed with distilled water to prevent any acid carryover.

If a 2-percent dilution of the glucose-glutamic acid standard check solution is outside the range of 200 ± 37 mg/L, BOD determinations made with the seed and dilution water should be rejected. The problem, which could arise from numerous sources, may be identified by running a series of dilution water blanks using different water sources with and without seed, preparing a fresh solution of glucose-glutamic acid, changing the seed, or preparing fresh reagents for the dilution water. The source of the problem needs to be determined before performing any additional BOD analyses.

Data Quality and Reporting--Precision data for spiked natural waters indicate that standard deviations of ±0.7 and ±26 mg/L can be achieved

for BOD concentrations of 2.1 and 175 mg/L, respectively (U.S. EPA 1979b). There is no acceptable method for determining the accuracy of the BOD test. BOD data should be reported as mg/L to the nearest 0.1 unit. Results for all determinations should be reported, including QA replicates, dilution water blanks, and glucose-glutamic acid standards. Any factors that may have influenced sample quality should also be reported.

Total Chlorine Residual

Field Procedures--

Collection--Chlorine residual samples can be collected in glass or plastic containers. During collection, samples should be protected from strong light and excessive agitation.

Processing--Because chlorine in aqueous solution is not stable, chlorine content of samples will decrease rapidly after collection, particularly for weak solutions. In addition, both strong light (e.g., sunlight) and agitation will accelerate the reduction of chlorine. There is no preservation technique available. Chlorine-residual samples should therefore be analyzed immediately after collection and protected from strong light and agitation before and during the analysis.

Laboratory Procedures--

Analytical Procedures--Chlorine residual should be determined using U.S. EPA Methods 330.1, 330.2, 330.3, 330.4, and 330.5 or APHA Methods 408A, 408B, 408C, 408D, and 408E. The methods should be consulted to determine which are most appropriate for available equipment, expected effluent constituents, and expected levels of precision and accuracy. The amperometric method (i.e., U.S. EPA Method 330.1, APHA Method 408C) is the preferred method because it is not subject to interference from color, turbidity, iron, manganese, or nitrite nitrogen (APHA 1985). This method is not as simple as the colorimetric techniques and requires greater operator skill to obtain the best results. However, sample color and turbidity may interfere with all colorimetric procedures. Because all methods of chlorine-residual determination depend on the stoichiometric production of iodine, effluent containing iodine-reducing substances may not be analyzed accurately by any of these methods, especially where iodine remains in solution.

Calibration and Preventive Maintenance--The methods should be consulted for procedures related to preparation of standards and calibration.

Quality Control Checks--For all colorimetric procedures, a minimum of one color and one turbidity blank should be run per batch to evaluate these potential sources of interference. For all techniques, duplicate analyses should be conducted on a minimum of 10 percent of the total number of samples.

Corrective Action--There are many sources of interference with chlorine residual tests. If a particular source of interference cannot be adequately compensated for using one method, an alternate method should be used.

Data Quality and Reporting--The detection and accurate quantification of total chlorine residual in effluent is routinely attainable, although method detection limits, accuracy, and precision can vary depending on the method used. The method should therefore be consulted to determine expected detection limits, accuracy, and precision. Total chlorine residual concentrations should be reported as mg/L to the nearest 0.01 unit. Results should be reported for all determinations, including QA replicates and color and turbidity blanks. Any factors that may have influenced sample quality should also be reported.

Oil and Grease

Field Procedures--

Collection--Samples should be collected in glass bottles. Bottles should first be washed with a warm aqueous detergent mixture, and then, in sequence, thoroughly rinsed with hot tap water, rinsed at least twice with distilled water, rinsed with 1,1,2-trichloro-1,2,2-trifluoroethane (i.e., Freon or equivalent), and dried in a clean oven at $\geq 105^{o}$ C for 30 min. Bottle caps should be lined with TFE-coated cardboard inserts or aluminum foil. Plastic containers are not acceptable.

Only grab samples, and not composite samples, should be collected to limit loss of oil and grease on sampling equipment. The entire grab sample should be submitted for analysis. To obtain a daily average concentration, grab samples collected at prescribed time intervals can be submitted for analysis. Headspace should be left in each sample container for addition of acid and mixing.

Processing--Acidify the sample in the collection bottle to a pH <2 using sulfuric or hydrochloric acid. Samples should be stored in the dark at 4° C. Recommended maximum holding time is 28 days (U.S. EPA 1984).

Laboratory Procedures--

Analytical Procedures--Oil and grease should be analyzed using procedures described in U.S. EPA Method 413.1 or APHA Method 503A. Because asphaltic materials are insoluble in Freon, the recommended method will give low recoveries for samples containing such material. U.S. EPA Method 413.1 (gravimetric oil and grease) measures relatively nonvolatile hydrocarbons, vegetable oils, animal fats, waxes, and soaps. The method is often used for wastewater analyses since it requires minimal instrumentation and calibration. Sulfur causes interference for the gravimetric method because it will be extracted and included as oil and grease. Light hydrocarbons

that volatilize at temperatures below 70° C (e.g., gasoline through No.2 fuel oil) are lost during the solvent removal step.

Calibration and Preventive Maintenance--For gravimetric oil and grease analyses, check accuracy of the analytical balance periodically (minimum of once per week recommended) using Class S weights. A service contract that includes scheduled preventive maintenance at least once per year is recommended. Scratched, chipped, or cracked boiling flasks should be replaced. For infrared oil and grease analyses, follow the manufacturer's preventive maintenance procedures for the infrared spectrophotometer. Cells used for analysis should be checked for scratches each time they are used. Scratched cells should not be used.

Quality Control Checks--Duplicate samples should be collected and performed at a minimum of every 10 samples to establish an estimate of precision. Because samples should not be split after collection, separate grab samples should be taken for analysis.

Distilled water spiked with a U.S. EPA performance sample should be extracted and analyzed with every batch of samples to monitor recovery. Bottles should be checked for cleanliness by analyzing distilled water that has been acidified in a sample bottle. A solvent blank should accompany each batch of samples.

Corrective Action--If oil and grease concentrations in procedural blanks are greater than the detection limit, check the cleanliness of all glassware. Always use separatory funnels with TFE stopcocks to avoid contamination from stopcock grease. For gravimetric analyses, high results will be obtained if any Freon or fumes remain in the flask after distillation.

If difficulty occurs with emulsions during solvent extraction, follow procedures described in the methods. If the emulsion still fails to dissipate

after addition of salts, gently turn the separatory funnel to the horizontal position and slowly rotate. Be careful to keep the stopper securely in place.

If precision or recovery from spike results are poor, check adequacy of extraction by increasing shaking time.

Data Quality and Reporting--The definition of oil and grease is based on the procedures used. Unless identical procedures are used, oil and grease determinations are not intercomparable. Therefore, the method used for analysis should always be specified.

Interlaboratory recovery results were 102±37 percent at 6.0 mg/L and 97±35 percent at 18.0 mg/L for the gravimetric method (U.S. EPA 1983a). Measurements should be reported to a minimum of two significant figures in mg/L. Detection limits are in the range of 5 mg/L for gravimetric oil and grease determinations (U.S. EPA Method 413.1). Results should be reported for all determinations, including QA replicates, spiked samples, and blanks. Any factors that may have influenced sample quality should also be reported.

Nitrogen (Ammonia)

Field Procedures--

Collection--Ammonia samples can be collected in glass or plastic bottles. Each bottle and cap should be rinsed thoroughly with sample water prior to sample collection.

Processing--Results of ammonia analyses are most reliable when they are made on fresh samples. However, if analysis must be delayed, samples can be stored for up to 28 days by acidification to pH<2 with sulfuric acid and refrigeration at 4° C. The length of delay before analysis should be recorded on the log sheet.

Laboratory Procedures--

Analytical Procedures--Manual distillation of effluent samples prior to ammonia determinations is required by the U.S. EPA, unless data on file demonstrate that distillation is not required. Distillation is recommended due to the sensitivity of ammonia procedures to color and possible interferences in the effluent. Following distillation at pH 9.5, ammonia concentration can be determined by U.S. EPA Methods 350.1, 350.2, or 350.3 or APHA Methods 417A, 417B, 417D, or 417G. The methods should be consulted to determine which is most appropriate for available equipment, expected concentrations, and expected levels of precision and accuracy.

Calibration and Preventive Maintenance--Calibration procedures should follow those specified in the method. If samples are being distilled, standards should also be distilled prior to analysis to check for ammonia contamination or loss during processing. Concentrations of the calibration standards should bracket the sample concentrations. If a sample concentration is outside the range of calibration, then an additional calibration standard should be analyzed to check if the result is within the linear range of

the method. Alternatively, the sample should be diluted to within the calibration range and then reanalyzed.

Quality Control Checks--Duplicate analyses should be conducted on a minimum of 5 percent of the total number of samples, with an additional 5 percent of the samples spiked and analyzed for percent recovery. A blank should be analyzed with each batch of samples. A U.S. EPA performance sample should be analyzed at least once per quarter.

Corrective Action--Contamination of ammonia samples can occur easily due to the volatile nature of ammonia. To prevent possible cross-contamination, reagents used for other analyses that contain ammonia (e.g., colorimetric phenol) should be isolated from samples and standards used for ammonia determinations. In addition, cleaning preparations that contain significant quantities of ammonia (e.g., Pinesol, wax removers) should not be used in the laboratory area where ammonia determinations are performed.

Contaminated glassware should be rinsed with 1+1 HCl and then with distilled water. To check for contamination, blanks should be analyzed whenever a new reagent is prepared.

Data Quality and Reporting--Detection and accurate quantification of ammonia in effluent is routinely attainable, although method detection limits can vary widely because of methods or instrumentation. The analytical method should be consulted to determine expected detection limits, precision, and accuracy. Data should be reported in mg/L as N to a maximum of three significant figures. Results should be reported for all determinations, including QA replicates and spiked samples. Any factors that may have influenced sample quality should also be recorded.

Nitrogen (Total Kjeldahl)

Field Procedures--

Collection--Kjeldahl nitrogen samples can be collected in glass or plastic containers. Caps should be unlined, as paper liners and/or glue may interfere with the analysis. Each container and cap should be rinsed thoroughly with sample water prior to sample collection.

Processing--If possible, samples should be analyzed immediately after collection. If immediate analysis is not possible, samples can be stored up to 28 days by acidification to pH<2 with sulfuric acid and refrigeration at 4° C. The length of delay before analysis should be recorded on the log sheet.

Laboratory Procedures--

Analytical Procedures--Approved test procedures for the analysis of total Kjeldahl nitrogen include U.S. EPA Methods 351.1, 351.2, 351.3, or 351.4 and APHA Methods 417B, 417D, 417E, 420A, or 420B. The methods should be consulted to determine which is most appropriate for available equipment, expected concentrations, and expected levels of precision and accuracy.

Calibration and Preventive Maintenance--Calibration procedures should follow those specified in the method. If samples are being digested and distilled, standards should also be digested and distilled prior to analysis to check for ammonia contamination or loss during distillation. Concentrations in the calibration standards should bracket the sample concentrations. If a sample concentration is outside of the range of calibration, then an additional calibration standard should be analyzed to check if the result is within the linear range of the method. Alternatively, the sample should be diluted to within the calibration range and then reanalyzed.

Quality Control Checks--Duplicate analyses should be conducted on a minimum of 5 percent of the total number of samples, with an additional 5 percent of the samples spiked and analyzed for percent recovery. A blank should be analyzed with each batch of samples. A U.S. EPA performance sample should be analyzed at least once per quarter.

Corrective Action--Because ammonia is a component of Kjeldahl nitrogen, precautions against contamination that were described for ammonia analyses should be followed.

Data Quality and Reporting--The detection and accurate quantification of Kjeldahl nitrogen in effluent is routinely attainable, although method detection limits can vary widely because of methods or instrumentation. The analytical method should be consulted to determine expected detection limits, precision, and accuracy. Data should be reported in mg/L as N to a maximum of three significant figures. Results should be reported for all determinations, including QA replicates, blanks, and spiked samples. Any factors that may have influenced sample quality should also be recorded.

Nitrogen (Nitrate and Nitrite)

Field Procedures--

Collection--Nitrate-nitrite samples can be collected in glass or plastic containers. Prior to sample collection, each container and cap should be rinsed thoroughly with sample water.

Processing--Nitrate-nitrite samples should be analyzed immediately after collection. If a delay occurs, samples can be stored for up to 24 h by acidification to pH<2 with sulfuric acid and refrigeration at 4° C. Samples must not be preserved using mercuric chloride because the mercuric ion accelerates the degradation of the cadmium-reduction column (APHA 1985).

Laboratory Procedures--

Analytical Procedures--Approved test procedures for the analysis of nitrate-nitrite include U.S. EPA Methods 353.1, 353.2, and 353.3 and APHA Methods 418C and 418F. The methods should be consulted to determine which is most appropriate for available equipment, expected concentrations, and desired levels of precision and accuracy.

Calibration and Preventive Maintenance--Calibration procedures should follow those specified in the method. Efficiency of each reduction column should be checked by comparing a nitrite standard to a reduced nitrate standard at the same concentration. This efficiency check should be made at the beginning and the end of each sample run and at a minimum frequency of every 10 samples. Reactivate the copper-cadmium granules when reduction falls below 75 percent.

Concentrations of the calibration standards should bracket the sample concentrations. If a sample concentration is outside the range of calibration, then an additional calibration standard should be analyzed to check if

the result is within the linear range of the method. Alternatively, the sample should be diluted to within the calibration range and reanalyzed.

Quality Control Checks--Duplicate analyses should be conducted on a minimum of 5 percent of the total number of samples, with an additional 5 percent of the samples spiked to analyze for percent recovery. A blank that has been run through the reduction column should be analyzed with each batch of samples. A U.S. EPA performance sample should be analyzed at least once per quarter.

Corrective Action--Various components of the effluent can interfere with the analysis. The method should be reviewed for ways to remove possible interferences prior to analysis. Possible intereferences include suspended solids, residual chlorine, oil and grease, and high concentrations of iron, copper, or other metals.

The area where nitrate-nitrite analyses are performed should be well isolated from exposure to nitric acid or nitric acid fumes.

Data Quality and Reporting--The detection and accurate quantification of nitrate-nitrite in effluent are routinely attainable, although method detection limits can vary because of methods or instrumentation. The analytical method should be consulted to determine expected detection limits, precision, and accuracy. Data should be reported in mg/L as N to a maximum of three significant figures. Results of all determinations should be reported, including QA replicates, blanks, and spiked samples. Any factors that may have influenced sample quality should also be reported.

Phosphorus (Total)

Field Procedures--

Collection--Phosphorus samples may be collected in glass or plastic containers. Containers should be rinsed with 1N HCl followed by several rinses with distilled water. Detergents containing phosphate should never be used on containers or labware that is to be used for phosphate analysis. Sample containers and lids should be rinsed thoroughly with sample water before sample collection.

Processing--Phosphorus samples can be stored up to 28 days before analysis by acidification to pH<2 with sulfuric acid and refrigeration at 4° C. Samples with low concentrations of phosphorus should not be stored in plastic containers, as phosphates may adsorb onto the container walls.

Laboratory Procedures--

Analytical Procedures--Approved test procedures for the analysis of total phosphorus in effluent are U.S. EPA Methods 365.1, 365.2, 365.3 and 365.4 and APHA Methods 424C, 424F, and 424G. The methods should be consulted to determine which is most appropriate for available equipment, expected concentrations, and desired levels of precision and accuracy.

Calibration and Preventive Maintenance--Calibration procedures should follow those specified in the method. Concentrations of the calibration standards should bracket the sample concentration. If a sample concentration is outside the range of calibration, then an additional calibration standard should be analyzed to check if the result is within the linear range of the method. Alternatively, the sample should be diluted to within the calibration range and reanalyzed.

Quality Control Checks--Duplicate analyses should be conducted on a minimum of 5 percent of the total number of samples, with an additional

5 percent of the samples spiked to analyze for percent recovery. A blank should be analyzed with each batch of samples. A U.S. EPA performance sample should be analyzed at least once per quarter.

Corrective Action--Because phosphorus contamination can occur from a variety of sources, it is recommended that a clearly marked set of labware be dedicated to only phosphorus analysis. This labware should never be exposed to phosphorus detergents or reagents containing phosphate.

Various components of the effluent can interfere with the analysis. The method should be reviewed for ways to remove interferences or adjust for interferences from components that cannot be removed. Silica and arsenic are possible positive interferences, while hexavalent chromium and nitrite can cause low recovery.

For highly colored or turbid samples, additional sample preparation (e.g., further oxidation or filtration) may be required prior to color development. In any case, blanks should be prepared by adding all the reagents except the coloring reagents to the sample. Measure absorbance in the sample blank at the wavelength used for the phosphorus determination and subtract this absorbance value from the sample absorbance prior to calculation of phosphorus concentration.

Data Quality and Reporting--Detection and accurate quantification of total phosphorus in effluent is routinely attainable. Actual method detection limits can vary because of methods or instrumentation. The analytical method should be consulted to determine expected detection limits, precision, and accuracy. Data should be reported in mg/L as P to a maximum of three significant figures. Results of all determinations should be reported, including QA replicates and spiked samples. Any factors that may have influenced sample quality should also be reported.

Priority Pollutant Metals

Field Procedures--

Collection--The best containers for collection of trace metal samples are made of quartz or TFE. Because these containers are expensive, the preferred sample container is made of polypropylene or linear polyethylene with a polyethylene cap (APHA 1985). Borosilicate glass containers may be used, but do not use soft glass containers or containers with aluminum or cardboard lined lids.

A minimum sample size of 100 mL is required for the analysis of all priority pollutant metals, except mercury, which requires an additional 100 mL. To allow for duplicates, spikes, and potential reanalysis, a sample size of 0.5-1 L is recommended for the entire list of priority pollutant metals.

Possible problems during sample collection involve contamination from the sampling device, airborne dust, cross-contamination from previous samples, and loss of metals by adsorption on container walls or precipitation after collection. Contamination can be minimized by avoiding the use of metal when collecting effluent samples. Automatic sampling devices should be free of metal parts in contact with the sample. Prior to use, containers should be thoroughly cleaned with detergent solution, rinsed with tap water, soaked in acid, and then rinsed with metal-free water. Any glass or plastic parts associated with the sampling equipment should be cleaned in the same manner. For quartz, TFE, or glass containers, use 1+1 HNO_3, 1+1 HCl, or aqua regia (3 parts conc HCl + 1 part conc HNO_3) for soaking. For plastic material, use 1+1 HNO_3 or 1+1 HCl. Reliable soaking conditions are 24 h at 70° C (APHA 1985). Do not use chromic acid when preparing containers. For metal parts, clean as stated for glass or plastic, except omit the acid soak step of the cleaning procedure. All acids should be at least reagent grade.

Processing--Acidify samples to pH<2 with nitric acid immediately after sampling. Usually 1.5 mL concentrated HNO_3/L sample is sufficient. Check that adequate acid has been added by testing an aliquot using pH paper or a pH meter. (Do not insert any test materials into the sample container.) Use high-purity acid for preservation.

Recommended maximum holding time for trace metal samples is 6 mo, except for mercury samples, which should be held a maximum of 28 days prior to analysis (U.S. EPA 1982).

Laboratory Procedures--

Analytical Procedures--Priority pollutant metals should be analyzed according to the methods identified in Table 1B (see Appendix A) of U.S. EPA (1984). Prior to the analysis, the effluent sample must be digested using the acids specified in the procedure. The digestate can then be analyzed by flame Atomic Absorption Spectrophotometry (AAS), graphite furnace AAS, or Inductively Coupled Plasma (ICP), depending on the sample concentration and required detection limit. Mercury analyses must be performed on a separate sample aliquot by cold vapor AAS.

ICP can be used to screen samples for elements that are present in relatively high concentrations or for those that may require more sensitive analysis by graphite furnace AAS. Analysis by ICP can be subject to inter-element interferences, while graphite furnace AAS can be subject to matrix problems from acid or salt content of the samples. The detection limit of the selected method should be adequate to allow determination of compliance with water quality criteria.

Calibration and Preventive Maintenance--In general, all instruments must be calibrated daily and each time the instrument is set up. Calibration procedures should follow those for the specified method for each analysis. Calibration standards must be prepared using the same concentrations of acids as will result in the samples following sample preparation.

After an instrument has been calibrated, the accuracy of the initial calibration should be verified by the analysis of certified control solutions at a frequency of once every 10 samples or every 2 h during an analysis run, whichever is more frequent, and after the last analytical sample. If a certified control solution is not available, then a standard should be used. Analyte for this standard should be from a different source than that for the initial calibration. If the deviation of the continuing calibratio verification is greater than the calibration control limits specified in the method, then the instrument must be recalibrated, and the preceding 10 samples reanalyzed.

All equipment should have scheduled routine preventive maintenance, and a record of all maintenance should be kept in a logbook. Critical spare parts should be kept on hand.

Quality Control Checks--To establish an estimate of precision, a minimum of 5 percent of the total number of samples should be analyzed in duplicate or one duplicate for each survey, whichever is more frequent. When more than 20 samples are to be analyzed for one survey, the project manager may choose to implement a program of triplicate analyses. The overall percentage of replicates should be at least 5 percent. To establish an estimate of recovery, samples spiked before digestion should be analyzed at the same frequency as replicates. Spike concentrations to be added should be approximately equal to the concentration found in the unspiked sample. An acceptable range of spike concentrations is 0.5-5 times the sample concentration.

A method blank should be carried through all digestion and analysis steps at a minimum frequency of every 20 samples, or for each batch of samples analyzed, whichever is more frequent. If the concentration of the blank is less than the required detection limit, then no correction of sample results is performed. If the blank contamination is extensive, then the batch of samples associated with the blank should be reanalyzed.

In general, the blank should be 10 times less than the concentration of the analyte in the sample. The data should be corrected by data users for the blank values between the required detection limit and the control limit.

For ICP analysis, additional QC checks should include an interference check sample to verify interelement and background correction factors. For graphite furnace AAS, additional QC checks should include duplicate injections with the mean value reported. Relative standard deviation of the readings should be within control limits, or the sample must be rerun at least once.

Corrective Action--If the concentration of the field or method blank is greater than the required detection limit, then all steps in the sample handling should be reviewed. Many trace metal contamination problems are due to airborne dust. Keeping containers closed and rinsing all handling equipment immediately prior to use minimizes dust problems.

Poor duplication may be caused by inadequate mixing of the sample before removal of aliquot, inconsistent contamination, inconsistent digestion procedures, or instrumentation problems.

Poor spike recovery may be caused for the same reasons as poor duplication. However, if duplicate results are acceptable, then poor spike recovery may be caused by loss of analyte during digestion or by sample matrix interferences during analysis. To check analyte loss during digestion or for low recovery due to interferences during analysis, spike the sample after digestion and compare the analysis to the predigestion spike. If the results are different, then the digestion technique should be adjusted. If the results are the same then dilute the sample by at least a factor of five and reanalyze. If spike recovery is still poor, then standard additions, matrix modifiers, or another method is required.

Data Quality and Reporting--Data should be reported to a maximum of three significant figures as mg/L. These units are consistent with ODES format. Detection limits can vary widely because of methods or instrumentation. The analytical method should be consulted to determine expected detection limits, precision, and accuracy. The data report should include duplicate, spike, and blank results. The data should not be blank-corrected. It is recommended that all new data included in the ODES database be blank-corrected by the data users. The data summary from the laboratory should also include:

- Digestion procedures
- Instrument detection limits
- Detection limit for each element
- Blank associated with sample
- Deviations from the prescribed method
- Problems associated with analysis.

For a more thorough QA review, additional documentation (e.g., calibration curves) may be requested.

Priority Pollutant Organic Compounds

Field Procedures--

Collection--The priority pollutant organic compounds can be separated into purgeable (volatile) and extractable (base/neutrals, acids, pesticides, and PCBs) compounds. Container preparation and collection techniques differ for these two groups.

If a volatile analysis is required, two separate 40-mL glass containers should be filled leaving no headspace. The container, screw cap, and septum should be washed with detergent, rinsed once with tap water, rinsed once with distilled water, and dried at >105° C. Use of a solvent rinse will interfere with the analysis. To obtain a sample with no headspace, fill the vial to overflowing so that a convex meniscus forms at the top. With the cap liner's TFE side down, place the cap carefully on the opening of the vial, displacing the excess water. Once sealed, invert the bottle to verify the seal by demonstrating the absence of air bubbles. Samples for volatile analyses should be grabs only, because many of the volatile compounds of interest may be lost while compositing.

For the extractable analyses, amber glass containers with TFE-lined screw caps should be used. Clear glass may be used if the sample is kept from light (i.e., stored in an ice chest or refrigerator). It is advised that 4 L be collected to allow for reanalysis if necessary. Eight L should be collected for samples to be analyzed as spikes or duplicates. The container, lid, and liner should be washed with detergent, rinsed twice with tap water, rinsed once with distilled water, and the liner and container rinsed once with high-purity methylene chloride or acetone. Kiln drying of the container at 450° C for at least 1 h can be substituted for solvent rinse. There is evidence that some priority pollutants (e.g., hexachlorobenzene) in aqueous solution adsorb strongly to TFE lid liners. This may be a potential problem if the effluent contains these pollutants.

Automatic sampling equipment should be clean, and free of plastic and other sources of contamination. Ideally, a sample bottle containing "organic-free water" carried through all processing and handling will serve as a field blank. Because organic-free water is not readily available outside of a laboratory, this may be impractical for all monitoring programs. Alternatively, an empty sample jar carried through all processing and handling will serve as a field blank. A solvent rinse of the bottle should be analyzed. The solvent should be the same as that used for sample extraction. This will serve as a check on contamination that may occur during shipping and storage.

Processing--Samples should be stored in the dark at 4° C or on ice. Freezing of the samples in transit should be avoided as the water expansion causes broken vials. For volatile organic compounds, maximum recommended holding time is 7 days. For extractable organic compounds, maximum recommended holding time is 7 days prior to extraction, with all analyses completed within 40 days of extraction.

Sample extracts should be stored frozen at <-10° C.

Laboratory Procedures--

Analytical Procedures--Priority pollutant organic compounds should be analyzed according to the methods identified in Tables 1C and 1D (see Appendix B) of U.S. EPA (1984). If samples with analyte levels that differ by several orders of magnitude as determined by screening or experience are being analyzed together, carryover can be a problem. This should be kept in mind when reviewing data obtained by auto-injection. For volatile organic compounds, samples that appear "clean" should be analyzed first. Analysis of an appropriate solvent after a high-level sample can minimize the chance of false positives. If separate injection syringes are used for standards and samples, any bias between syringes should be accounted for. They should be cleaned thoroughly between each use to avoid cross-contamination.

Detection limits vary with specific compounds and methods but are usually obtainable in the range of 5-10 ppb for base, neutral, and acid compounds (U.S. EPA Method 625), 0.005-0.10 ppb for pesticide/PCB analysis (U.S. EPA Method 608), and 1-10 ppb for volatiles (U.S. EPA Method 624). Sample size, final volume, co-extractives and nature of effluent can all affect the actual detection limit. Detection limits requested by project managers should take into account obtainable levels as well as required 301(h) program criteria.

Calibration and Preventive Maintenance--Before beginning analysis of samples, a calibration curve bracketing the working range must be performed. This calibration should be repeated after all major equipment disruptions. Calibration checks of the GC/MS system should be done at the beginning and end of each day and at least every 12 h to verify that the instrument's response is in control. Specific instrument tuning criteria (e.g., DFTPP, BFB) are provided in each method (U.S. EPA 1984). Calibration of the GC/ECD system should be done at the beginning of each day and verified at least every 6 h. These are only recommended minimum frequencies. Depending on the nature of the samples, it may be necessary to verify calibration more frequently.

A routine QC check on each lot of analytical reagent used in extraction can prevent undetected contamination problems. Each lot of alumina, silica gel, sodium sulfate, or Florasil used should be monitored as a possible source of contamination. The efficacy of adsorbants often varies between lots and should be routinely monitored. Each lot of surrogate mixture should also be checked for contaminants.

Equipment should be maintained and serviced routinely by experienced chemists according to manufacturers instructions and good laboratory practices. Logbook records should document maintenance for each measurement device.

Quality Control Checks--To monitor reproducibility and extraction efficiency, duplicates and matrix spike analyses should be performed. A frequency of 5 percent each or one each per survey (whichever is greater) is the recommended minimum. When more than 20 samples are to be analyzed for one survey, the project manager may choose to implement a program of triplicate analyses. The overall percentage of replicates should be at least 5 percent. Method interferences can be caused by contaminated glassware, reagents, solvents, or processing hardware. To check for contamination, one method blank should be processed after each group of 2 samples or with each batch, whichever is greater. Addition of known amounts of surrogate compounds to each sample before purging or extraction will serve to monitor preparation and analysis of samples. A spike prepared in the field can be submitted to the laboratory as another measure of accuracy.

Corrective Action--When results of QC samples fall outside of established limits, several courses of action are available. Contamination in the lab reagent blank sample is cause for positive findings of the same compounds in samples to be suspect. If contamination is extensive, reanalysis of the entire associated group may be in order. Blank contamination should be kept to less than 10 percent of sample values and preferably below the method detection limits. Contamination found in the field blank should be considered when looking at the associated sample data. Extensive contamination of lab or field blank (>30 percent of sample values) should lead to a detailed review of laboratory, sampling, transport, and storage procedures. Phthalates, methylene chloride, and toluene are common laboratory contaminants that may be detected in blanks above the method detection limit.

Poor duplication may be caused by inadequate mixing of the sample before removing aliquots, inconsistent contamination, inconsistent extraction procedures, or instrument problems. If further replication of an analysis produces poor results, a step-by-step examination of the method may be necessary to determine the reason for the poor results. If the results

of the duplicates fall outside control limits, the laboratory should contact the data user and discuss the possibility of further analyses.

Poor spike recovery may be caused for the same reasons as poor duplication or by matrix effects. If the spiked compound is added at a concentration much less than that found in the sample, recovery may be difficult to determine. This problem is difficult to avoid, as most environmental samples contain unknown concentrations of organic compounds. To check for analyte loss during processing, a step-by-step examination of the method using a spiked blank is necessary, with measurements of the analyte at each step.

Sample results that fall outside the established calibration curve are suspect until linearity of response can be shown at that concentration, or the extract diluted appropriately and reanalyzed. Extremely high concentrations of organic compounds may saturate the extraction capabilities of the method and may necessitate re-extraction of a smaller sample size or use of a more appropriate method.

If the instrument's continuing calibration (single point) falls outside control limits, no samples should be analyzed until the calibration is within control limits. The standard should be reinjected to confirm the problem and to discount the possibility of operator error. If still outside of control limits, the instrument should be recalibrated (multi-point) and at least the previous sample reanalyzed and results compared. This may indicate that reanalysis of all samples since last calibration is unnecessary.

Data Quality and Reporting--A data summary for each sample should be submitted. All data should be reported in ug/L using two significant figures. Data should not be blank-corrected. Spike recoveries, relative percent difference between duplicates, and blank results (ng/sample) should also be submitted. The following information is also needed for each sample to allow independent QA review:

- Sample volume extracted
- Final volume of extract
- Amount of extract injected
- Instrument detection limits
- Detection limit for each compound
- Blank associated with sample
- Deviations from the prescribed method
- Problems associated with analysis.

For a more thorough QA review, additional documentation (e.g., chromatograms, computer listings) may be requested.

Total and Fecal Coliform Bacteria

Field Procedures--

Collection--Samples should be collected in clean, sterile polypropylene or glass containers. The sample containers must be resistant to sterilizing conditions and to the solvent action of water. The container lids must not produce bacteriostatic or nutritive compounds upon sterilization. The sample containers must seal tightly. Containers with chips, cracks, or etched marks should be discarded.

Heat-resistant glass or plastic sample containers should be autoclaved at 121° C for 15 min. Alternatively, dry glass containers can be sterilized in a hot-air oven at 170° C for at least 2 h. For plastic containers that are not heat-resistant, ethylene oxide gas sterilization is acceptable (Bordner et al. 1978). Containers sterilized by gas should be stored at least 12 h before use to ensure all gas has dissipated.

If the sample water has residual chlorine, sodium thiosulfate should be added to neutralize the chlorine and thereby prevent continued bactericidal action after sample collection. In this manner, the true microbial content of the water at the time of sampling can be estimated more accurately. If sodium thiosulfate must be added to a sample, it should be added to the sample container prior to sterilization so that the final concentration in the sample will be 100 mg/L. For a 120-mL container, 0.1 mL of a 10-percent solution of sodium thiosulfate will neutralize a sample containing as much as 15 mg/L of residual chlorine (APHA 1985).

If the sample water contains heavy metals in concentrations exceeding 0.01 mg/L, a chelating agent should be added to the sample container to reduce metal toxicity. This is particularly important if samples are not analyzed within 4 h after collection. APHA (1985) recommends using the disodium salt of ethylenediaminetetracetic acid (EDTA), adjusted to pH

6.5, and added to the sample container before sterilization. For a 120-mL container, addition of 0.3 mL of a 15-percent EDTA solution is considered adequate (APHA 1985).

It is critical that samples are not contaminated during the collection process. To avoid contamination, sterilized containers should be kept sealed until they are used, containers should be filled without rinsing, and container lids should be replaced immediately after the samples have been collected. When removed from containers, lids should be held face down in one hand and not set down on any surface. Adequate headspace (at least 2.5 cm) should be left in each sample container to facilitate mixing prior to analysis.

Processing--Samples should be analyzed as soon as possible after collection. If a delay occurs, samples should be held at 4° C for a maximum of 6 h. The length of delay should be noted on the log sheet.

Laboratory Procedures--

Analytical Methods--Details of the membrane filter (MF) method and the most probable number (MPN) method are presented in Part III of Bordner et al. (1978) and in Parts 908 and 909 of APHA (1985). Although the MF method is more precise than the MPN method, it is also more sensitive to interference from turbidity in samples. Because the MF technique usually yields low and variable recovery from chlorinated waters, the MPN technique should be used for chlorinated effluent.

Calibration and Preventive Maintenance--This information is reviewed extensively in Part IV of Bordner et al. (1978) and in Part 902 of APHA (1985).

Quality Control Checks--Quality control checks for coliform analyses are listed in detail in Part IV of Bordner et al. (1978) and in Part 902 of APHA (1985). The list includes:

- Sterility checks on media, dilution and rinse water, glassware, and membrane filters

- Duplicate analyses on 10 percent of samples and on at least one sample per test run

- Colony verifications on a monthly basis.

Corrective Action--Procedures detailed in the relevant sections of Bordner et al. (1978) and APHA (1985) should be followed.

Data Quality and Reporting--Table 909:II of APHA (1985) presents 95-percent confidence limits for the MF method for coliform colonies of 1, 2, 3, 4, 5 and 10. The precision of the MPN method increases with increasing number of replicates. With five tubes, each with 1 mL of sample, a completely negative result is expected less than 1 percent of the time (APHA 1985). Confidence limits (95 percent) for various MPN counts are given in Tables 908:III, 908:IV, and 908:V of APHA (1985).

Using the MF method, data should be reported as densities of coliforms per 100 mL. Using the MPN method, data should be reported as MPN values per 100 mL. Results should be reported for all determinations, including QA replicates, sterility checks, and colony verifications. Any factors that may have influenced sample quality should also be reported.

Enterococcus Bacteria

Field Procedures--

Collection--Samples should be collected in clean, sterile polypropylene or glass containers. The sample containers must be resistant to sterilizing conditions and to the solvent action of water. The container lids must not produce bacteriostatic or nutritive compounds upon sterilization. The sample containers must seal tightly. Containers with chips, cracks, or etched marks should be discarded.

Heat-resistant glass or plastic sample containers should be autoclaved at 121° C for 15 min. Alternatively, dry glass containers can be sterilized in a hot-air oven at 170° C for at least 2 h. For plastic containers that are not heat-resistant, ethylene oxide gas sterilization is acceptable (Bordner et al. 1978). Containers sterilized by gas should be stored at least 12 h before use to ensure all gas has dissipated.

If the sample water has residual chlorine, sodium thiosulfate should be added to neutralize the chlorine and thereby prevent continued bactericidal action after sample collection. In this manner, the true microbial content of the water at the time of sampling can be estimated more accurately. If sodium thiosulfate must be added to a sample, it should be added to the sample container prior to sterilization so that the final concentration in the sample will be 100 mg/L. For a 120-mL container, 0.1 mL of a 10-percent solution of sodium thiosulfate will neutralize a sample containing as much as 15 mg/L of residual chlorine (APHA 1985).

If the sample water contains heavy metals in concentrations exceeding 0.01 mg/L, a chelating agent should be added to the sample container to reduce metal toxicity. This is particularly important if samples are not analyzed within 4 h after collection. APHA (1985) recommends using the disodium salt of ethylenediaminetetracetic acid (EDTA), adjusted to pH

6.5, and added to the sample container before sterilization. For a 120-mL container, addition of 0.3 mL of a 15-percent EDTA solution is considered adequate (APHA 1985).

It is critical that samples are not contaminated during the collection process. To avoid contamination, sterilized containers should be kept sealed until they are used, containers should be filled without rinsing, and container lids should be replaced immediately after the samples have been collected. When removed from containers, lids should be held face down in one hand and not set down on any surface. Adequate headspace (at least 2.5 cm) should be left in each sample container to facilitate mixing prior to analysis.

Processing--Samples should be analyzed as soon as possible after collection. If a delay occurs, samples should be held at 4° C for a maximum of 6 h. The length of delay should be noted on the log sheet.

Laboratory Procedures--

Analytical Methods--Methods for analyzing enterococcus bacteria are currently being finalized by U.S. EPA.

Calibration and Preventive Maintenance--This information is reviewed extensively in Part IV of Bordner et al. (1978) and in Part 902 of APHA (1985).

Quality Control Checks--Quality control checks for these analyses are listed in detail in Part IV of Bordner et al. (1978) and in Part 902 of APHA (1985). The list includes:

- Sterility checks on media, dilution and rinse water, glassware, and membrane filters

- Duplicate analyses on 10 percent of samples and on at least one sample per test run

- Colony verifications on a monthly basis.

Corrective Action--Procedures detailed in the relevant sections of Bordner et al. (1978) and APHA (1985) should be followed.

Data Quality and Reporting--Data should be reported according to the specifications currently being finalized by U.S. EPA.

MONITORING THE RECEIVING ENVIRONMENT

Recommended methods for measuring receiving-environment variables during 301(h) monitoring programs are described in this section. The initial major section includes general procedures for sampling preparation, sampling, and sample handling. The section on sample handling contains tables that summarize the recommended collection specifications and analytical methods for specific receiving-environment variables. The second major section presents detailed procedures for measuring 21 receiving environment variables.

GENERAL METHODS

Sampling Preparation

Prior to each field survey, a sampling and analysis plan should be prepared. It should summarize all of the elements essential for conducting the survey. The chief scientist or a designee should thoroughly review the plan (including QA/QC criteria) before each cruise, and ensure that its essential elements are understood by all members of the scientific party. The review should focus on the completeness of the plan and the clarity of its objectives. A complete sampling and analysis plan should contain the following major elements:

- Identification of scientific party and the responsibilities of each member
- Statement and prioritization of study objectives
- Description of survey area, including background information and station locations
- Identification of variables to be measured and corresponding required containers and preservatives

- Identification of all sample splits or performance samples to be submitted with the samples

- Brief description of sampling methods, including positioning technique, sampling devices, replication, and any special considerations (including handling and shipping hazardous materials)

- Detailed cruise schedule, including time, date, and location of embarkation and debarkation

- Identification of onshore laboratories to which samples should be shipped after cruise completion

- Survey vessel requirements (e.g., size, laboratory needs, sample storage needs)

- Location and availability of an alternate survey vessel

- All special equipment needed for the survey (e.g., camera, nets, communication devices)

- All pertinent QA/QC procedures.

It is essential that the study objectives and their prioritization be understood by all members of the scientific party. This will ensure that if modifications of the survey plan become necessary in the field, their impact on the overall goals of the cruise can be evaluated adequately. After the sampling plan has been reviewed, contingency plans should be outlined. These plans should include potential problems and their solutions. Possible solutions to some problems frequently encountered during offshore surveys are listed in Table 4. Development of contingency plans can be greatly assisted by reviewing cruise summary reports and consulting with chief scientists of previous cruises.

TABLE 4. EXAMPLES OF PROBLEMS FREQUENTLY ENCOUNTERED DURING OFFSHORE SURVEYS AND RECOMMENDED SOLUTIONS TO EACH PROBLEM

Problem	Recommended Solution(s)
Sampling equipment fails or is lost overboard	- Have necessary tools onboard to make repairs - Maintain spare parts inventory for major equipment - Have back-up equipment onboard - Have SCUBA equipment and divers onboard for retrieval - Know where nearest tools, back-up equipment, or divers are located on shore
Sampling efficiency reduced by poor weather	- Extend cruise length - Reschedule cruise
Sampling efficiency reduced because of seasickness	- Ensure scientific crew is large enough to compensate for reduced personnel - See solutions to second problem
Sampling delayed because vessel is inoperative	- Reschedule cruise - Extend cruise length once vessel is repaired - Charter an alternate vessel
A sample is partially lost or slightly contaminated	- Discard and take another sample
Bottom sampler will not penetrate to a sufficient depth after repeated casts	- Add weight to the sampler - Move a short distance before taking next sample
One or more water bottles fail to trip on a particular cast	- Discard all samples from that cast and take a new cast

The captain of the survey vessel should be provided with a copy of the survey plan to ensure that it is consistent with the equipment and capabilities of the vessel. Modifications to the ship or cruise plan may be required.

To ensure that all required sampling equipment and supplies are available at the time of sampling, an equipment checklist should be constructed. Spare parts and backup supplies should be included in the inventory. All equipment should be inspected before the cruise, with sufficient time allowed to make necessary repairs or replacements. At the end of each cruise, equipment should be inspected, cleaned, and stored properly.

Sampling Procedures

Station Location--

Accurate navigation is essential to ensuring that stations can be plotted and reoccupied with a high degree of certainty. Because compliance with 301(h) regulations usually requires that stations be located at specified distances relative to a fixed-point discharge (e.g., within-ZID, ZID-boundary) or that stations be sampled seasonally or annually, failure to accurately locate or relocate stations can strongly affect the results and conclusions of a survey. For example, if a within-ZID station is positioned erroneously outside the ZID, the resulting measurements may suggest that the environmental impacts of the discharge are much less than they actually are. Alternatively, if a station thought to be outside the ZID is located mistakenly within the ZID, conditions would appear to be worse than they really are. As an additional example, failure to accurately relocate a station may produce results that suggest conditions are improving, when they actually may be deteriorating.

Although a variety of navigation and/or position fixing systems are available currently, factors such as price, availability, and accuracy vary considerably among them (Tetra Tech 1986c). The station positioning system selected for a given survey should be able to meet all regulatory requirements for accuracy and should, at a minimum, provide a high degree

of precision (i.e., repeatable measurements). Positioning systems that are precise but lack a high degree of accuracy may be used after actual station locations are determined by accurate, independent means (i.e., "ground-truthed"). For bottom-related samples, all positioning systems should be used in conjunction with a fathometer to ensure that sampling occurs at the proper water depth (allowing for tidal stage and any fathometer corrections).

Water Sampling--

For most 301(h) monitoring programs, water column variables will be sampled using water bottles, in situ instrumentation, or a combination of both of these techniques.

Water Bottles--Water bottle samplers are relatively simple devices that generally consist of some type of cylindrical tube with stoppers at each end and a closing device that is activated by a messenger or an electrical signal. The most commonly used samplers of this description are the Kemmerer, Van Dorn, Niskin, and Nansen samplers. Each device samples a discrete parcel of water at any designated depth. Frequently, multiple water samplers are fixed on a rosette frame so that several depths can be sampled during one cast or replicate samples can be taken at the same depth.

Prior to deployment, the stoppers of water bottle samplers are cocked open on the sampling vessel. At this step, it is critical that the interior of the sampler and stoppers remain free from contamination. All members of the sampling team should therefore avoid touching the insides of the sampler and stoppers, and all samplers and stoppers must be rinsed thoroughly.

After cocking, the sampler is lowered to a designated depth. The sampler must be open at both ends so that water is not trapped within the device as it is being lowered through the water column. Once the sampler reaches the desired depth, it should be allowed to equilibrate with ambient conditions for 2-3 min before being closed.

After equilibration, the closing device can be activated by messenger or electrical signal, and the sampler can be retrieved. It is recommended that at least two samplers be used simultaneously for each depth. A second sampler will provide a backup to the primary sampler in case the latter device misfires or won't trigger. This will eliminate the need for an additional cast. A second sampler will also supplement the primary sampler if the volume collected by the latter device is too small for all required subsampling and rinsing. To ensure that all subsamples at a particular depth are collected from the same water parcel, it is essential that they all be taken from a single cast. Multiple casts using a single water sampler will not meet this objective. Sample water must therefore be used conservatively after collection.

Once the water sampler is brought on board the sampling vessel, the stoppers should be checked immediately for complete seals. If a stopper is not properly sealed, water from the sampled depth may have leaked out upon retreival and been replaced by water from shallower depths. Because this kind of contamination can bias results, the entire water sample should be rejected.

Accepted water samples should be subsampled as soon as possible because appreciable delay may result in unrepresentative subsamples. For example, measurement of variables sensitive to biological alteration (e.g., dissolved oxygen, turbidity, color, nutrients) or settlement within the water sampler (e.g., total suspended solids, settleable solids, phytoplankton) can be biased substantially by subsampling delays.

In Situ Instrumentation--A wide variety of instruments capable of measuring water column variables *in situ* are available. Most are deployed from the sampling vessel using a cable. Sensors housed within the instruments measure the variables of interest and transmit data in the form of electrical signals back to recorders on the survey vessel. The simplest instruments measure conductivity (i.e., for conversion to salinity), temperature, and water pressure (i.e., for conversion to depth). Additional sensors and instrumentation can be included to measure a variety of additional water-column variables such as dissolved oxygen, pH, transmissivity (i.e., an

index of turbidity), oxidation-reduction potential, and specific ions (e.g., ammonia). Generally, the operating manuals supplied with these instruments provide detailed descriptions of how to calibrate, operate, and maintain the equipment. If a particular manual lacks sufficient detail, the manufacturer should be contacted for specific guidance.

Although the instrument operating manuals should be consulted for specific instructions, several general procedures for operating in situ instruments apply to all or most devices, and have a direct influence on data quality. When acquiring in situ instruments for use in marine and estuarine waters the following features are highly recommended:

- Instruments should be of rugged construction, corrosion-resistant, and waterproof

- Instruments should be capable of operating with acceptable accuracy within the range of expected environmental conditions

- Cables should be of adequate length and strength

- Electrical connectors should be easy to use, waterproof when connected, and capable of being locked after connection

- External sensors should be protected by housings or other means

- Instruments should be easy to calibrate on board the survey vessel

- Ideally, a service center should be located nearby so that an instrument can be repaired rapidly, if necessary

- If sample contamination may be a problem, all sampling equipment should be made of non-contaminating material.

When using in situ instruments it is critical that it be protected from rough handling and adverse environmental conditions. The following precautions should always be taken:

- Instruments should be transported in specially designed shipping boxes

- Instruments should be surrounded by a "birdcage" when being deployed. Frequently, instruments are attached within a rosette frame when they are used in conjunction with water bottles. Caution should be taken to ensure that the "birdcage" or rosette frame do not create sampling artifacts

- Instruments should be securely lashed down in a safe area when on deck

- Instruments should be rinsed with fresh or distilled water after each submersion

- Optical surfaces should be cleaned with alcohol and lens tissue after each submersion

- Instruments should be protected from direct sunlight and excessive heat, as plastic components may be damaged by heat

- External sensors and optical ports should be covered and protected whenever the instrument is not being used.

When operating in situ instruments, the following procedures should be followed to ensure that instruments are prepared, deployed, and retrieved properly:

- Instruments should be allowed to warm up for a sufficient length of time prior to calibration or deployment

- Instruments should be field-calibrated at the beginning of each day of sampling. All circuits should be tested at the same time. Calibration should be conducted more frequently if equipment malfunctioning is suspected

- Upon instrument deployment, the survey vessel should be anchored or drifting slowly

- Instruments should be deployed relative to vessel construction and sea conditions so that cables will not tangle in the propellor or rudder assemblies

- When measuring continuous profiles, the lowering speed through the water column should not exceed the equilibration rate of the sensor having the slowest response time

- Excessive strain should not be placed on the cable(s), as it could disrupt electrical connections.

Routine maintenance and inspection of in situ instruments should follow the manufacturer's recommendations. General procedures include:

- All rubber parts of underwater connectors should be coated with silicone grease to ensure proper lubrication

- Plugs should be inspected for bent or broken pins, which may cause faulty connections and flooded cables

- Cables should be inspected for nicks, cuts, abrasions, or other signs of physical damage

- Seals should be inspected and periodically cleaned and greased to ensure a waterproof fit

- Desiccant should be inspected and replaced with fresh or reactivated desiccant when necessary.

Factory inspection and recalibration at recommended intervals is essential to ensure that an in situ instrument is functioning properly and will continue to function properly during future cruises. It is recommended that factory service be conducted at least once per year. Factory service should always be conducted when instrument malfunctions cannot be corrected by following the operating manual. Factory service may also be required when part of an in situ system is replaced, as all components are not interchangeable without factory recalibration.

Log Sheet--Variables that should be recorded on the water sampling log sheet are:

- Geographic location
- Date and time
- Weather conditions
  - Sea state
  - Sky state
  - Precipitation
- Station number
- Sample number
- Replicate number
- Position coordinates
- Total depth
- Sampled depth(s)
- Sampler description
  - Kind
  - Volume
  - Rosette, paired, single
- Kinds of subsamples
- Comments relative to sample quality
- Names of chief scientist and sampling team
- Vessel name.

Grab Sampling--

Most sampling of benthic infauna and sediments for 301(h) monitoring programs will be conducted using grab samplers. Benthic organisms may be used for a variety of purposes, such as 1) comparing species composition and abundances between potentially impacted and reference areas (spatial trends) or between sampling periods (temporal trends), and 2) evaluating bioaccumulation of toxic substances in body tissues. Sediments may be used for such purposes as 1) comparing characteristics of grain sizes and concentrations of conventional and toxic substances between potentially impacted and reference areas or between sampling periods, and 2) relating sediment characteristics to observed distributions of benthic infauna. To be capable of collecting infauna and sediments suitable for quantitative comparisons, the grab must be appropriate for the sediment and depth conditions in the study area, and must be operated properly following standardized procedures. Holme (1971) discusses the details of grab selection and operation. A thorough reading of that reference is highly recommended.

Grab Selection--Numerous grab samplers are available for collecting benthic infauna (see Holme 1971). This variety exists because field conditions (e.g., weather, water depth, sediment type) are not uniform, and because the structure (e.g., species composition, abundance) and function (e.g., trophic relationships, energy flow) of benthic communities vary spatially and temporally. The grab selected for use should be able to perform reliably and efficiently under the anticipated field conditions and given the anticipated types of benthic communities that will be sampled.

To be reliable, a grab must collect useful samples consistently within its design under most anticipated field conditions. That is, each time the grab is deployed there should be a high probability of collecting a quantitative sample. Matching sampler design with the predominant sediment types is especially important for achieving a high degree of reliability. The grab should also collect representative samples of the populations that comprise the infauna (i.e., be efficient). To be efficient, the "bite" into the sediments should be deep enough to collect most of the organisms within the jaws of the grab. Moreover, the "bow wake" associated with

the descending grab should be as small as possible to minimize blowing away the organisms at the sediment-water interface immediately before the grab contacts the sediment.

The installation of mesh screens instead of solid plates on the tops of the grab jaws will help minimize the "bow wake", and will keep organisms from escaping once the grab jaws are closed. The screen mesh apertures should be the same as those used for sieving samples in the field. The screens should be hinged to provide easy access to the surface of the sample so that grab penetration can be estimated, the condition of the surface sediments can be observed, and sediment subsamples can be collected. The exterior of the hinged screens should be fitted with rubber flaps that close when the grab is being retrieved, but open when the grab is being deployed. Although these flaps may increase the bow wake slightly (even when they open on descent), they will help minimize winnowing of the surficial sediments when the grab is retrieved.

In addition to selecting the proper kind of sampler, it is important to choose a grab that samples an appropriate area of bottom. This should be done prior to the major sampling effort using data from historical studies or a preliminary survey. There are two recommended ways to determine the appropriate area to sample (Gonor and Kemp 1978):

1. Choose a sample unit size that collects a representative complement of the species present, or

2. Choose a sample unit size for which the variance-to-mean ratio for major community variables is low.

The first criterion is met by plotting the number of species collected as a function of different sample unit sizes. At the point on the curve where the number of species approaches an asymptote, the sample unit size is considered sufficiently large to collect a representative complement of species. The second criterion is met by calculating the variance-to-mean ratios of various sample unit sizes for a given variable. A low ratio is desirable for accurate and precise estimates of mean values and for

statistical comparisons of mean values among stations. The variance-to-mean ratio changes with sample unit size because benthic organisms are distributed patchily in most cases (Elliott 1971). When the sample unit size is much smaller than the patch size, the ratio generally is low. As the sample unit size increases to about that of the patch, the ratio usually reaches its highest value. The ratio then declines with further increases in sample unit size.

In summary, the ideal benthic grab sampler is reliable, efficient, large enough to collect a representative complement of species, and small enough to yield low variance-to-mean ratios for major community variables (e.g., total numbers of species, total numbers of individuals). Unfortunately, such a sampler has yet to be invented. However, consideration of the foregoing factors should result in the selection of a dependable sampler that yields information adequate to meet the objectives of the monitoring program. In most coastal and estuarine areas, a 0.1-m^2 (1.1-ft^2) van Veen grab and a 0.1-m^2 (1.1-ft^2) Smith-McIntyre grab are adequate in most silty and sandy substrates. However, preliminary tests should be conducted for various samplers in all areas that have not been sampled previously, and in areas where the sediments are predominantly clay or gravel.

Grab Deployment and Retrieval--The grab sampler should be attached to a hydraulically operated cable and should be preceded by a ball-bearing swivel (Figure 3). The swivel and all shackles connecting the cable to the grab should have a load capacity at least five times that of a loaded grab. It may be desirable to keep the shackles and swivel small, however, as it may be necessary for the shackles to travel through the block at the end of the davit when retrieving the grab. A snatch block at the end of the davit in lieu of a standard block may also facilitate grab deployment and retrieval. For safety reasons, a safety pin should be used to prevent the grab from triggering accidentally. Also, the grab should be deployed with a minimum of swinging when out of the water. Use of handling lines (Figure 3) clipped to the hydrowire is an effective method for minimizing grab swinging.

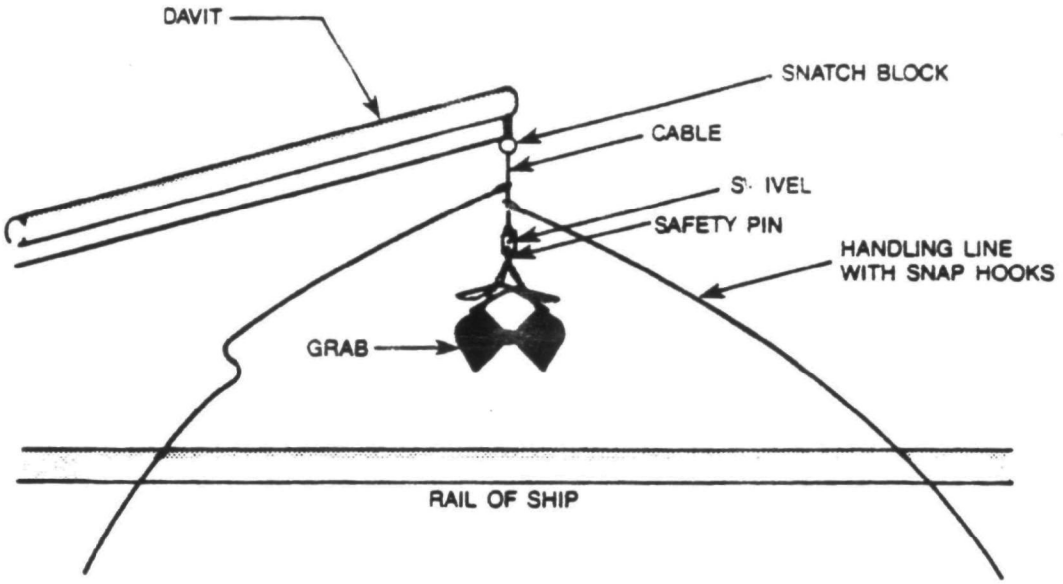

Figure 3. Deployment of a grab sampler.

The grab sampler should be lowered and raised through the water column at a speed of approximately 20 m/min (66 ft/min) using the vessel's hydraulic system. This lowering rate generally allows adequate penetration of the device into the sediment while minimizing the chance that the sampler will be flipped over by the weight of excess wire cable falling faster than the parachuting sampler. If adequate penetration cannot be achieved using a controlled descent, the sampler can be allowed to free fall the last 1 or 2 m. However, extra attention should be paid to evaluating surface disturbance under such conditions. Flipping the grab sampler due to excess cable weight occurs most frequently when sampling at depths in excess of 200 m (656 ft). At shallower depths, the weight of the cable is generally lighter than the weight of the sampling device. When more than 200 m (656 ft) of cable is deployed, care must also be taken to ensure that the cable does not pull itself off the reel.

After the grab has contacted the bottom, it should be retrieved slowly at first to permit the grab jaws to close properly. After the jaws are closed, a retrieval speed of 20 m/min (66 ft/min) should be maintained. When the grab approaches the water surface (i.e., when first sighted), the winch should be stopped to permit the handling lines to be clipped onto the cable. The grab can then be raised slowly, and the handling lines can be used to minimize swinging of the grab. Excessive swinging is unsafe and may also compromise the quality of the sample. When brought on board, the grab and sample should be lowered into a waist-high stand designed to receive it.

Once the sampler is brought aboard, the hinged screens can be opened and the sample examined. The sediment should be characterized using the following qualitative physical characteristics: sediment texture; sediment color; presence, type, and strength of odor; grab penetration depth [to nearest 0.5 cm (0.2 in)]; degree of leakage (if any); sediment surface disturbance; and obvious abnormalities, such as wood debris or large quantities of mollusc fragments. Samples showing excessive leakage or disturbance of the sediment surface should be rejected (Figure 4). It is also recommended that samples be rejected if they do not achieve the following minimum penetration depths in various types of sediment:

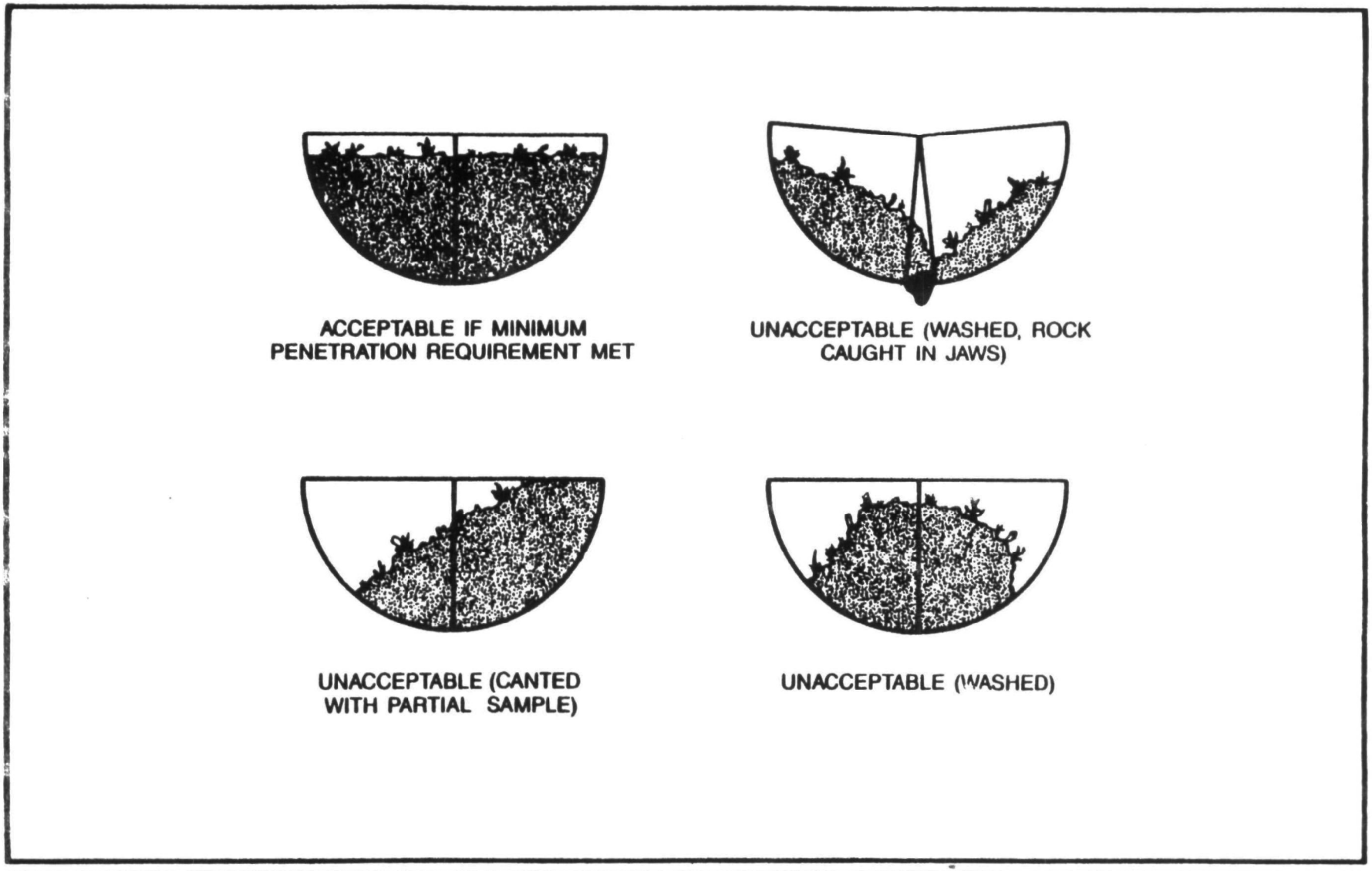

Figure 4. Examples of acceptable and unacceptable grab samples.

- Cobble/pebble substrate cannot be sampled adequately using conventional grab samplers

- 4 cm (1.6 in) for coarse sand/gravel

- 5 cm (2.0 in) for medium sand

- 7 cm (2.7 in) for fine sand

- 10 cm (3.9 in) for sandy silt and silty sand

- 10 cm (3.9 in) for silt

- 10 cm (3.9 in) for clay.

See Shepard (1954, 1963) for definitions and size ranges of the foregoing granulometric terms.

The acceptable penetration depths are based on the vertical distribution of organisms found in these different sediment types. Generally, they are sufficient to insure that at least 95 percent of the organisms and species that would have been encountered to depths of 20 cm (7.9 in) are captured. All of the foregoing grab sample characteristics should be recorded on the field log sheet.

Log Sheet--Variables that should be recorded on the grab sampling log sheet are:

- Geographic location
- Date and time
- Weather conditions
  - Sea state
  - Sky state
  - Precipitation

- Station number
- Replicate number
- Position coordinates
- Depth
- Sampler description
  - Kind
  - Area sampled
- Number and kinds of subsamples
- Sediment characteristics
  - Texture
  - Color
  - Odor
  - Structures
  - Debris
  - Degree of leakage
  - Surface disturbance
- Penetration depth
- Sieve mesh size
- Comments relative to sample quality
- Names of chief scientist and sampling team
- Vessel name.

Trawl Sampling--

Most sampling of demersal fishes and epibenthic macroinvertebrates for 301(h) monitoring programs will be conducted using small otter trawls. Sampled organisms may be used for a variety of purposes, such as 1) quantitative comparison of abundances between potentially impacted and reference areas (spatial trends) or between sampling periods (temporal trends), 2) determination of prevalences of grossly visible external abnormalities, and 3) evaluation of bioaccumulation of contaminants in tissue (Tetra Tech 1985a). To be capable of collecting data suitable for quantitative comparisons, the otter trawl must be designed in a specific manner and operated using standardized procedures. Ideally, at least one member of the trawling team should have ample experience in using this device. Mearns and Allen (1978) provide the most comprehensive description of how small otter trawls should be

designed and used for conducting biological surveys in coastal waters. A thorough reading of that document is highly recommended.

Trawl Design--To ensure proper operation, it is essential that the otter trawl be constructed by an experienced manufacturer using a proven net design. The net should be large enough to capture adequate numbers of fishes, but small enough to be handled easily by a crew of two or three persons on a medium-size [i.e., 9-15 m (30-50 ft)] vessel. Past experience with 301(h) data collection has shown that a net with headrope length of approximately 7.6 m (25 ft) is an acceptable size.

The footrope of the otter trawl must be weighted to ensure that fishes living close to the bottom are adequately sampled. This capability is especially critical for sampling flatfishes (i.e., Pleuronectiformes), as many of these individuals lie partly buried in bottom sediments when resting. Mearns and Allen (1978) recommend using a chain rather than lead weights on the footrope because its effect on the digging characteristics of the net is easier to adjust.

Floats must be attached to the headrope of the otter trawl to hold the mouth of the net open when sampling. When sampling at depths greater than 15-30 m (50-100 ft), it is essential that floats be designed to withstand high ambient pressure without deforming. Floats made of styrofoam or cork tend to compress under high pressure, whereas hollow plastic floats tend to burst.

Otter boards should be fitted with a minimum of four towing chains to allow fine-scaled adjustment of the angle at which the boards lean when towed. A proper angle of attack is critical to holding the mouth of the net open when towing. The wear pattern on the shoe of the otter board can indicate whether a board is operating properly. In addition, the manner in which the boards spread the net immediately following submersion also indicates whether they are functioning correctly. Mearns and Allen (1978) describe how to adjust the otter boards.

The net bridles should be flexible (e.g., braided nylon) and attached to the hydrowire with a two- or three-way swivel. This arrangement minimizes the twisting forces on the net assembly and allows it to take the shape and orientation for which it was designed. Mearns and Allen (1978) recommend that the length of the bridles be approximately three times the headrope length to ensure that the otter boards spread properly.

Trawl Operation--Before sampling a transect, it is advisable to slowly make a pass along the isobath of interest and monitor its course with a fathometer. If the isobath is highly irregular and requires the vessel to change course frequently, an alternate transect should be considered. To allow the otter trawl to sample a a uniform depth in a consistent manner, the transect should be nearly straight or broadly curved.

After a sampling transect has been selected, the trawl assembly should be readied for deployment. The net should be laid out on the deck and scanned for rips. All lines should be untangled and their attachment points checked. The vessel should begin maneuvering toward the transect, and the net should be lowered into the water a sufficient distance from the sampling transect to ensure that it will touch bottom at the beginning of the transect. Immediately after the otter boards enter the water, the winch should be stopped and the boards allowed to spread. If the boards do not open the mouth of the net properly, the assembly should be retrieved and adjusted. After the otter boards spread properly, the trawl assembly should be lowered at a slow and steady speed while the vessel is underway. If the descent is erratic, or tension is reduced on the hydrowire, the otter boards may cross, requiring the trawl assembly to be retrieved and redeployed.

After the net touches bottom, a sufficient length of hydrowire (i.e., scope) should be payed out to ensure that the net is pulled from a horizontal, rather than vertical position. If the scope is insufficient, the net will tend to leave the bottom and inadequately sample fishes residing at the sediment-water interface. In general, required scope declines with increasing depth because the additional weight of the hydrowire enhances the horizontal

component of the towing forces. Based on general guidance given by Mearns and Allen (1978), the following scope-to-depth ratios are recommended:

- 5:1 for depths < 20 m (66 ft)
- 4:1 for depths of 20-75 m (66-246 ft)
- 3.5:1 for depths of 75-200 m (246-656 ft)
- 3:1 for depths of 200-350 m (656-1,148 ft)
- 2:1 for depths > 350 m (1,148 ft).

It is critical that all stations at a particular depth be sampled using the same scope. Failure to use a consistent scope can result in variable sampling efficiencies among stations.

After sufficient scope has been payed out, the winch should be locked. Sampling begins at that point. When sampling, the vessel should proceed at a constant speed of approximately 2.5 kn (4.2 ft/sec) relative to the seabed. If the speed is not held constant, the shape of the net mouth will vary and the transect will not be sampled consistently throughout its length. Gibbs and Mathews (1982) found that an 8-m (26-ft) otter trawl fishes most efficiently when towed at about 2.5 kn. Faster speeds caused the footrope to leave the bottom, whereas slower speeds caused the spread of the trawl to decline and the otter boards and footrope to dig excessively into soft substrates.

When a surface current or substantial wave action occurs, the vessel should point into the current or waves when sampling providing this can be accomplished within the constraints of the study plan. It is strongly recommended that fishing effort be based on transect length rather than time of trawling. As shown in Figure 5, a 5-min haul at a constant vessel speed of 2.5 kn (relative to the water surface) will cover a distance of 0-385 m (0-1,262 ft), depending upon the speed of the opposing surface

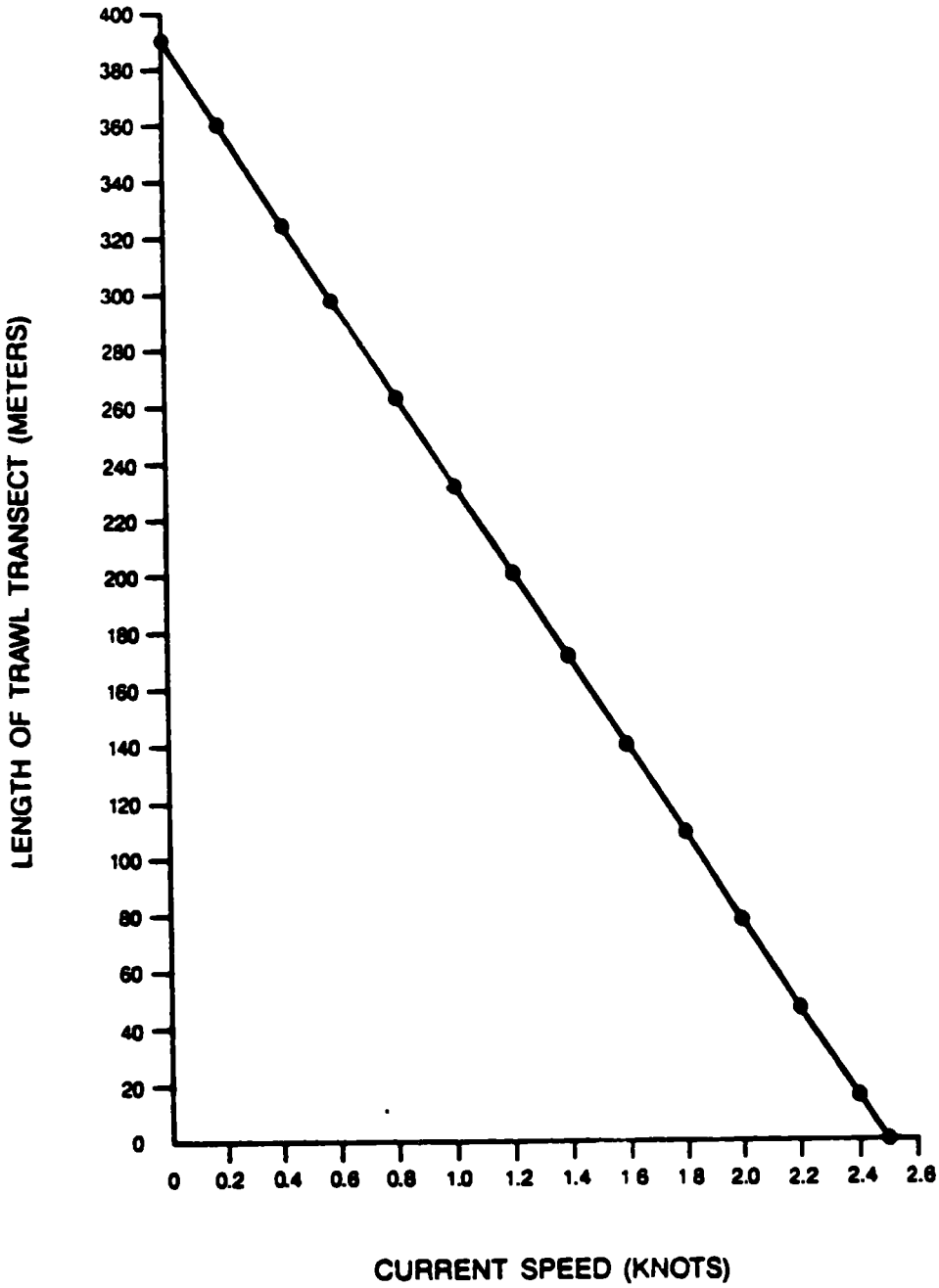

Figure 5. Transect length as a function of current speed. Net is towed at 2.5 knots for 5 minutes into an opposing surface current.

current. It is therefore very difficult to sample a standardized area of the seafloor when fishing effort is based on time of trawling.

When a transect has been covered completely, the winch should be engaged. Sampling ends at that point. The net should be retrieved at a constant speed as the vessel moves forward slowly. Constant tension should be maintained on the net to prevent captured fishes from escaping. Ideally, the net assembly should break the water in its fishing orientation.

After the net assembly is retrieved and secured, the catch can be processed. Quality assurance procedures related to catch processing are given in later sections of this report concerning bioaccumulation and assemblage characteristics of demersal fishes and epibentnic macroinvertebrates.

Log Sheet--The variables that should be recorded on the trawl sampling log sheet are:

- Geographic location
- Date
- Weather conditions
  - Sea state
  - Sky state
  - Precipitation
- Station number
- Replicate number
- Depth
- Vessel heading
- Vessel speed
- Surface current
  - Speed
  - Direction
- Hydrowire length

- Position coordinates and times
  - When net begins descent
  - When winch is locked
  - When net begins ascent
- Sampler description
  - Kind
  - Headrope length
  - Body mesh size
  - Cod-end liner mesh size
- Number and kinds of subsamples
- Comments relative to sample quality
- Names of chief scientist and sampling team
- Vessel name.

Sample Handling

After sample collection, proper sample handling ensures that changes in the constituents of interest are minimized and guards against errors when shipping and analyzing samples. Recommended sample size, containers, preservation, and storage requirements for each offshore variable are summarized in Table 5. Recommended laboratory methods for measuring receiving-environment variables are listed in Table 6. These requirements and methods are also noted in subsequent sections. These requirements and methods should be reviewed in advance by the laboratory personnel to ensure that sample sizes, containers, preservatives, and all other specifications are consistent with laboratory needs and capabilities.

Field Procedures--

It is important throughout any sampling and analysis program to maintain integrity of the sample from the time of collection to the point of data reporting. Proper chain-of-custody procedures allow the possession and handling of samples to be traced from collection to final disposition. Documents needed to maintain proper chain-of-custody include:

TABLE 5. RECOMMENDED SAMPLE SIZES, CONTAINERS, PRESERVATION, AND HOLDING TIMES FOR OFFSHORE SAMPLES

Measurement	Minimum Sample Size[a]	Container[b]	Preservative	Maximum Holding Time
Receiving water[c]				
pH	25 mL	P,G	None	Analyze immediately[d]
Salinity	200 mL	P,G	None	Indefinite
Temperature	1 L	P,G	None	Measure immediately[d]
Color	50 mL	P,G	Cool, 4°C	48 h
Turbidity	100 mL	P,G,	Cool, 4°C	48 h
Total suspended solids	1-4 L[e]	P,G	Cool, 4°C	7 days
Settleable solids	1 L	P,G	Cool, 4°C	48 h
Floating particulates	5 L	P,G	None	Analyze immediately[d,f]
Dissolved oxygen				
Probe	300 mL	G bottle & top only	None	Analyze immediately[d]
Winkler	300 mL	G bottle & top only	Fix on site; store in dark	8 h
Biochemical oxygen demand	1,000	P,G	Cool, 4°C	48 h
Oil and grease	1,000	G only	Cool, 4°C H_2SO_4 to pH<2	28 days
Nitrogen				
Ammonia-N	400 mL	P,G	Cool, 4°C H_2SO_4 to pH<2	28 days
Total Kjeldahl-N	500 mL	P,G	Cool, 4°C H_2SO_4 to pH<2	28 days
Nitrate + Nitrite-N	100 mL	P,G	Cool, 4°C H_2SO_4 to pH<2	28 days
Phosphorus (total)	50 mL	P,G	Cool, 4°C H_2SO_4 to pH<2	28 days
Total and fecal coliform bacteria	250-500 mL	P,G	Cool, 4° C 0.008% $Na_2S_2O_3$[g]	6 h
Enterococcus bacteria	250-500 mL	P,G	Cool, 4° C 0.008% $Na_2S_2O_3$[g]	6 h[h]
Chlorophyll a	2-4 L[e]	P,G	Freeze at -20° in the dark in a desiccator	21 days[i]
Phytoplankton	1 L	P,G	10% formalin	Indefinite[h]

TABLE 5. (Continued)

Sediment/infauna				
Grain size	100 g	P,G	Cool, 4° C	6 mo[h]
Total solids	50 g	P,G	Freeze	6 mo[h]
Total volatile solids	50 g	P,G	Freeze	6 mo[h]
Total organic carbon	50 g	P,G	Freeze	6 mo[h]
Biochemical oxygen demand	50 g	P,G	Cool, 4° C	7 days
Chemical oxygen demand	25 g	P,G	Cool, 4° C	7 days
Oil and grease	50 g	G only	Cool 4° C; or freeze	28 days[h]; 6 mo[h]
Sulfides				
Total	50 g	P,G	Cool, 4° C zinc acetate	7 days[h]
Water soluble	10 g	P,G	Cool, 4° C SAOB	4 days[h]
Priority pollutant metals	50 g	P,G	Freeze	6 mo[h]
Priority pollutant organic compounds				
Extractable compounds	100 g	G only	Freeze	6 mo[h]
Purgeable compounds	40 mL[j]	G only	Cool, 4° C	14 days[h]
Infauna	1 grab sample	P,G	10% formalin, then transfer to 70% ethanol or isopropyl alcohol	7 days[h] in formalin; indefinite in alcohol
Bioaccumulation (tissue)				
Priority pollutant metals	10 g	P,G[k]	Freeze	6 mo[h]
Priority pollutant organic compounds	50 g	G only[k]	Freeze	6 mo[h]

[a] Recommended field sample sizes for one laboratory analysis. If additional laboratory analyses are required (e.g., replicates), the field sample size should be adjusted accordingly.

[b] Polyethylene (P) or Glass (G).

[c] Reference: Adapted from U.S. EPA (1979b, 1984).

[d] Immediately means as soon as possible after the sample is collected, generally within 15 min (U.S. EPA 1984).

[e] Depends on concentration.

[f] No recommended holding time is given by U.S. EPA for floating particulates. Analysis should therefore be made as soon as possible.

[g] Should only be used in the presence of chlorine residual.

[h] This is a suggested holding time. No U.S. EPA criteria exist for the preservation of this variable.

[i] Strickland and Parsons (1977) recommend several weeks.

[j] Sediment sample should completely fill the 40-mL VOA vial (see text for details).

[k] These containers are for the tissue after resection. Whole organisms (e.g., fish) may be stored in aluminum foil for transfer to the laboratory for resection.

TABLE 6. RECOMMENDED METHODS FOR MEASURING RECEIVING-ENVIRONMENT VARIABLES

Variable	Method Reference		
	U.S. EPA[a]	APHA[b]	Other[c]
Receiving Water			
pH	150.1	423	*In situ*[d]
Salinity	-	-	Salinometer[e] *In situ*[d]
Temperature	170.1	212	*In situ*[d]
Color	110.3	204B	-
Turbidity	180.1	214A	-
Transmissivity	-	-	*In situ*[d]
Total suspended solids	160.2[f]	209C[f]	-
Settleable solids	160.5	209E	-
Floating particulates	-	206A[g]	-
Dissolved oxygen			
Probe	360.1	421F	*In situ*[d]
Winkler	-	-	Strickland and Parsons (1972)
Biochemical oxygen demand	405.1	507	-
Oil and grease	413.1 413.2	503A 503B	-
Nitrogen			
Ammonia-N	350.1 350.2 350.3	417A 417B 417D 417G	*In situ*[d]
Total Kjeldahl-N	351.1 351.3	417B 417D 417E 420A 420B	-

TABLE 6. (Continued)

Nitrate+nitrite-N	353.2 353.3	418C 418F	-
Phosphorus (total)	365.1 365.2 365.3	424C 424F 424G	-
Total coliform bacteria	-	908A[h] 909A[i]	p. 114[h,j] p. 108[i,j]
Fecal coliform bacteria	-	908C[h] 909C[i]	p. 132[h,j] p. 124[i,j]
Enterococcus bacteria	-	-	U.S. EPA[k]
Chlorophyll a	-	-	Strickland and Parsons (1972)
Phytoplankton	-	-	Stofan and Grant (1978)
Sediment			
Grain size	-	-	Plumb (1981)
Total solids	-	-	Plumb (1981)
Total volatile solids	-	-	Plumb (1981)
Total organic carbon	-	-	Plumb (1981)
Biochemical oxygen demand	-	-	Plumb (1981)
Chemical oxygen demand	-	-	Plumb (1981)
Oil and grease	-	-	Plumb (1981)
Sulfides			
Total	-	-	Plumb (1981)
Water soluble	-	-	Green and Schnitker (1974)

TABLE 6. (Continued)

Priority pollutant metals	-	-	Tetra Tech (1986a)
Priority pollutant organic compounds	-	-	Tetra Tech (1986a)
Infauna	-	-	Present document
Bioaccumulation (tissue)			
Priority pollutant metals	-	-	Tetra Tech (1986b)
Priority pollutant organic compounds	-	-	Tetra Tech (1986b)

[a] Methods recommended in U.S. EPA (1979b).

[b] Methods recommended in APHA (1985).

[c] Methods recommended in sources other than U.S. EPA (1979b) or APHA (1985) when no methods were recommended in the latter two sources.

[d] This variable can be measured using an in situ instrument. The operating manual for the instrument should provide all necessary information for proper instrument calibration and measurement of this variable.

[e] The instruction manual for the salinometer should provide all necessary information for instrument calibration and salinity determination.

[f] A 0.40- or 0.45-um membrane filter should be used instead of the glass-fiber filter recommended in the method.

[g] This method is tentatively recommended by APHA.

[h] This method can be used whether or not chlorine is present.

[i] This method can be used only when chlorine is absent.

[j] Page reference of this method in Bordner et al. (1978).

[k] U.S. EPA is currently finalizing a recommended method for this variable.

- Field logbook -- All pertinent information on field activities and sampling efforts should be recorded in a bound logbook. The field supervisor should be responsible for ensuring that sufficient detail is recorded in the logbook. The logbook should enable someone else to completely reconstruct the field activity without relying on the memory of the field crew. All entires should be made in indelible ink, with each page signed and dated by the author, and a line drawn through the unused portions of any page. All corrections should consist of permanent line-out deletions that are initialed by the chief scientist. At a minimum, entries in a logbook should include:

  - Date and time of starting work

  - Names of field supervisor and team members

  - Purpose of proposed sampling effort

  - Description of sampling site, including information on any photographs that may be taken

  - Location of sampling site

  - Details of actual sampling effort, particularly deviations from standard operating procedures

  - Field observations

  - Field measurements (e.g., pH, temperature, flow)

  - Field laboratory analytical results

  - Sample identification

- Type and number of sample bottles collected

- Sample handling, packaging, labeling, and shipping information (including destination).

Chain-of-custody procedures should be maintained with the field logbook. While being used in the field, the logbook should remain with the field team at all times. Upon completion of the sampling effort, the logbook should be kept in a secure area. All logged information should be summarized and submitted to U.S. EPA after sampling is completed.

- Sample labels -- Sample labels must be waterproof and must be securely fastened to the outside and/or placed inside each sample container (depending on the kind of sample) to prevent misidentification of samples. Labels must contain at least the sample number, preservation technique, date and time of collection, location of collection, and signature of the collector. Labels should be marked with indelible ink. Abbreviated labels may also be placed on the cap of each jar to facilitate sample identification.

- Chain-of-custody records -- A chain-of-custody record (Figure 6) must accompany every group of samples. Each person who has custody of the sample must sign the form and ensure that the samples are not left unattended unless secured properly.

- Custody seals -- Custody seals (Figure 7) are used to detect unauthorized tampering with the samples. Sampling personnel should attach seals to all shipping containers sent to the laboratory by common carrier. Gummed paper seals or custody tape should be used so that the seal must be broken when the container holding the samples is opened.

EPA

United States Environmental Protection Agency

Region 10
1200 Sixth Avenue
Seattle WA 98101

CHAIN OF CUSTODY RECORD

PROJECT				SAMPLERS: (Signature)							
LAB #	STATION	DATE	TIME	SAMPLE TYPE						NUMBER OF CONTAINERS	REMARKS
				WATER	SEDIMENT	TISSUE	AIR	OIL	OTHER		

RELINQUISHED BY: (Signature)	RECEIVED BY: (Signature)	DATE/TIME
RELINQUISHED BY: (Signature)	RECEIVED BY: (Signature)	DATE/TIME
RELINQUISHED BY: (Signature)	RECEIVED BY: (Signature)	DATE/TIME
RELINQUISHED BY: (Signature)	REC'V'D BY MOBILE LAB FOR FIELD ANAL.: (Signature)	DATE/TIME

DISPATCHED BY: (Signature)	DATE/TIME	RECEIVED FOR LAB BY: (Signature)	DATE/TIME

METHOD OF SHIPMENT:

Distribution Original – Accompany Shipment
One Copy – Survey Coordinator Field Files

Figure 6. An example of a chain-of-custody record. An equivalent form should be used for 301(h) monitoring.

U.S. ENVIRONMENTAL PROTECTION AGENCY
CLP Sample Management Office
P.O. Box 818 - Alexandria, Virginia 22313
Phone: 703/557-2490 - FTS/557-2490

SAS Number

SPECIAL ANALYTICAL SERVICE
PACKING LIST

Sampling Office:	Sampling Date(s):	Ship To:	For Lab Use Only
Sampling Contact: (name)	Date Shipped:		Date Samples Rec'd:
(phone)	Site Name/Code:	Attn:	Received By:

Sample Numbers	Sample Description i.e., Analysis, Matrix, Concentration	Sample Condition on Receipt at Lab
1.		
2.		
3.		
4.		
5.		
6.		
7.		
8.		
9.		
10.		
11.		
12.		
13.		
14.		
15.		
16.		
17.		
18.		
19.		
20.		
		For Lab Use Only

EPA CUSTODY SEAL

ENVIRONMENTAL PROTECTION AGENCY	SAMPLE NO.	DATE	TIME
	SIGNATURE		
	PRINT NAME AND TITLE (Inspector, Analyst or Technician)		

EPA Form 2560-2 (10-78)

Figure 7. Examples of a sample analysis request form (above) and a custody seal (below). Equivalent material should be used for 301(h) monitoring.

For further information regarding proper chain-of-custody procedures, consult the policies and procedures manual for the National Enforcement Investigations Center (NEIC; U.S. EPA 1978).

Sample Shipment--

All preserved samples should be shipped immediately after completion of sampling. This minimizes the number of people handling samples, and protects sample quality and security. Guidance for shipping hazardous materials can be found in U.S. Department of Transportation (1984). As samples are prepared for shipping, the following should be kept in mind:

- Shipping containers should be in good shape and capable of withstanding rough treatment during shipping.

- Samples should be packed tightly

  - Dividers must separate all glass containers

  - Empty space within shipping boxes should be filled so that jars are held securely.

- All containers must be leak-proof. If a container is not leak-proof by design, the interior should be lined with two heavy-duty plastic bags and the tops of bags should be tied once samples are inside. Adequate absorbent material should be placed in the container in a quantity sufficient to absorb all of the liquid.

- All samples should be accompanied by a sample analysis request. Variables to be analyzed by the laboratory, and total number and kind of samples shipped for analysis should be listed on the request sheet. An example sample analysis request form is illustrated in Figure 7. The laboratory should acknowledge receipt of shipment by signing and dating the form, and returning a copy to the designated QA coordinator.

- A chain-of-custody record for each shipping container should be filled out completely and signed.

- The original chain-of-custody record and sample analysis request should be protected from damage and placed inside the shipping box. A copy of each should be retained by the shipping party.

- The custody seal should be attached so that the shipping box cannot be opened without breaking the seal.

- For shipping containers carrying liquid samples

  - A "This End Up" label should be attached to each side to ensure that jars are transported in an upright position

  - A "Fragile-Glass" label should be attached to the top of box to minimize agitation of samples.

- Shipping containers should be sent by a carrier that will provide a delivery receipt. This will confirm that the contract laboratory received the samples and serve as a backup to the chain-of-custody record.

- All shipping charges should be prepaid by the sender to avoid confusion and possible rejection of package by the contract laboratory.

Laboratory Procedures--

At the laboratory, one person should be designated custodian of all incoming samples. An alternate should also be designated to serve in the custodian's absence. The custodian should oversee the following activities:

- Reception of samples
- Maintenance of chain-of-custody records
- Maintenance of sample-tracking logs
- Distribution of samples for laboratory analyses
- Sending samples to outside laboratories
- Supervision of labeling, log keeping, data reduction, and data transcription
- Storage and security of all samples, data, and documents.

Upon reception of samples, a designated laboratory person should fill out the chain-of-custody record, indicating time and date of reception, number of samples, and condition of samples. All irregularities indicating that sample security or quality may have been jeopardized (e.g., evidence of tampering, loose lids, cracked jars) should be noted on the sample analysis request form and returned to the client-designated QA coordinator. In addition, a designated laboratory person should initiate and maintain the sample tracking log that will follow each sample through all stages of laboratory processing and analysis.

Minimum information required in a sample-tracking log includes:

- Sample identification number
- Location and condition of storage
- Date and time of each sample removal and return to storage
- Signature of person removing and returning the sample

- Reason for removal from storage

- Final disposition of sample.

All logbooks, labels, data sheets, tracking logs, and custody records should have proper identification numbers and be accurately filled out. All information should be written in ink. Corrections should be made by drawing a line through the error and entering the correct information. Corrections should be signed and dated. Accuracy of all data reductions and transcriptions should be verified at least twice. All samples and documents should be properly stored within the laboratory until the client authorizes their removal. Security and confidentiality of all stored material should be maintained at all times. Before releasing analytical results, all information on sample tags, data sheets, tracking logs, and custody records should be cross-checked to ensure that data pertaining to each sample are consistent throughout the record.

Originals of the following documents should be sent to the client:

- Chain-of-custody records

- Sample-tracking logs

- Data report sheets

- Quality control records.

Copies of all forms should be retained by the laboratory in case originals are lost in transit.

When replicate analyses are conducted as QA/QC checks, it is recommended that they be distributed relatively evenly throughout the full sequence of samples analyzed, rather than being concentrated at some point (e.g., beginning, end) of the sequence. This precaution will enhance the probability that if problems develop within part of a sequence, they will be detected.

Shipboard Laboratory Analyses

Depending upon the size and capabilities of the survey vessel, many of the receiving-environment variables described in this document can be analyzed on board. In general, the laboratory procedures described in this document are applicable to both shipboard and land-based laboratories. This consistency is important to ensuring that analytical results will be comparable regardless of which kind of laboratory generates them.

Although most laboratory procedures are similar between shipboard and land-based laboratories, a number of additional factors must be considered when analyzing samples at sea. These factors relate primarily to the remoteness of the shipboard laboratory from land-based support and the movement and limited space of the survey vessel. The major considerations are:

- The design of the laboratory should be efficient, with convenient equipment locations and adequate storage space.

- The vessel should be equipped with an uninterruptible power supply that is adequate for operation of all scientific instruments.

- The laboratory should be well-ventilated to remove any toxic vapors created by chemicals.

- The temperature of the laboratory should be controlled, especially if variations in ambient temperature can influence particular analyses.

- Adequate lighting is necessary, especially for analyses requiring color discrimination (e.g., titration endpoints). Fluorescent lights of the daylight type are recommended (U.S. Navy 1968).

- The laboratory should have adequate water purification apparatus or be capable of storing water purified on shore.

- For storing many kinds of samples, adequate refrigeration and freezing capabilities are desirable.

- The laboratory should never be used as a general passageway or lounge.

- The laboratory should be off-limits to unauthorized personnel.

- Adequate safety and first aid equipment should be on board, preferably including an overhead quick-pull safety shower.

- Extreme care must be taken when handling sample (for quality purposes) and hazardous reagents (for safety purposes), as vessel movement can sometimes be unpredictable.

- Backup supplies and instruments should be on board so that sampling can continue if a piece of equipment is broken or will not operate properly. A continuously updated inventory tracking system is useful for maintaining backup equipment.

- All equipment should be properly secured to compensate for predictable and unpredictable vessel movements. Specially designed racks are useful for this purpose.

- Instruments should be checked and calibrated before sailing so that problems requiring land-based assistance can be solved quickly.

- Whenever possible, plastic containers should be used instead of glass because plastic is less susceptible to breakage.

- Instruments having digital displays are preferred over those using analog displays.

- Pre-printed data sheets should be used to ensure that all required information is recorded.

RECEIVING WATER ANALYSES

QA/QC procedures are presented in this section for the following 21 receiving water variables:

- pH*
- Salinity*
- Temperature*
- Color
- Transparency
- Turbidity (transmissivity*)
- Total suspended solids
- Settleable solids
- Floating particulates
- Dissolved oxygen (Winkler method)
- Dissolved oxygen (Probe method)*
- Biochemical oxygen demand (BOD)
- Oil and grease
- Nitrogen (ammonia)*
- Nitrogen (total Kjeldahl)
- Nitrogen (nitrate and nitrite)
- Phosphorus (total)
- Total and fecal coliform bacteria
- Enterococcus bacteria
- Chlorophyll a
- Phytoplankton.

Samples to be analyzed for these variables generally will be collected using water-bottle samplers. Those variables followed by an asterisk (*) may also be measured using in situ instruments. Operation of water-bottle samplers and in situ instruments are described in the preceding general methods section.

pH

Field Procedures--

Collection--Samples for pH determination should be collected in polyethylene or glass bottles with airtight screw caps. Because pH is unstable and cannot be preserved, these samples should be collected immediately after the sampler is brought on deck. Only dissolved oxygen samples should be collected before pH samples. Because pH of waters not at equilibrium with the atmosphere may change upon exposure to the atmosphere, sample containers should be completely filled and tightly sealed during collection.

Prior to sample collection, each sample bottle and cap should be rinsed thoroughly with sample water. This can be achieved by filling the bottle halfway, sealing and shaking it, and rinsing the stopper as the wash water is discarded.

A piece of soft-walled rubber tubing should be attached to the outlet valve of the sampler. This tubing should then be inserted to the bottom of the sample bottle and at least one full volume allowed to overflow the bottle. With the water still flowing, the tubing should be withdrawn slowly from the sample bottle. Contamination of the sample with air bubbles should be avoided.

After the tubing has been removed from the sample bottle, the stopper should be put in place carefully to avoid trapping air bubbles. Once stoppered, the sample should be checked for bubbles. If they are present, the sample should be discarded, and a new one taken. The stopper on each accepted sample should be double-checked to ensure a tight seal.

Processing--Because pH cannot be preserved, samples should be analyzed immediately after collection. If a short delay occurs, the samples should be stored in the dark at 4° C and the storage time should be noted on the log sheet.

Laboratory Procedures--

Analytical Procedures--Analytical procedures are given in U.S. EPA Method 150.1 and APHA Method 423. As noted previously, pH samples should be analyzed as soon as possible following collection.

Several potential sources of interference with pH measurements should be avoided. Because the response of the electrode can be impaired if it is coated with oily or particulate material, the electrode should be gently blotted or washed periodically with a detergent. Treatment with hydrochloric acid may be necessary to remove some kinds of film. Temperature can influence pH measurements by altering electrode output and changing the pH inherent in the sample. The first source of temperature interference can be controlled by using a pH meter with temperature compensation or by calibrating the meter at the temperature of the samples. Because the second kind of temperature interference cannot be controlled, the temperature at which the pH determination of each sample is made should be logged and reported. It is recommended that sample temperatures never differ by more than 2° C from that of the buffer solution.

When pH measurements are being made, it is critical that the sample be stirred at a constant rate to provide drift-free (<0.1 pH units) measurements. The rate of stirring should minimize air transfer at the surface of the sample. At least 30 sec should be allowed for each measurement to stabilize.

Calibration and Preventive Maintenance--Calibration procedures for the pH meter should follow specifications of the manufacturer. General guidelines are given by U.S. EPA (1979b) and APHA (1985).

Buffer salts can be purchased as a solution that has been calibrated to National Bureau of Standards salts. The pH meter should be calibrated at a minimum of two points that bracket the expected pH value of the samples

and that are three or more pH units apart (U.S. EPA 1979b). Prepare fresh buffer solutions at least every month to avoid erroneous calibration as a result of mold growth or contamination.

Preventive maintenance procedures should follow specifications given by the manufacturer of the pH meter. In general, verification of electrode performance and meter performance is the only operator service recommended. An electrode should be replaced when it no longer meets span requirements and does not improve with rejuvenating procedures.

Quality Control Checks--The pH meter should be calibrated at the beginning of each series of samples and after each group of 10 successive measurements. It is recommended that duplicate pH determinations be made on at least 10 percent of the total number of samples. As an independent check, a U.S. EPA reference sample should be analyzed at a minimum of every 3 mo.

Corrective Action--If the pH meter does not appear to be operating correctly, consult the manufacturer's troubleshooting guide. Some common problems include a dirty electrode, failure to fill the reference portion of the electrode with internal solution, and inadequate stirring.

Data Quality and Reporting--A precision of ± 0.02 pH unit and an accuracy of 0.05 pH unit can be achieved under the best circumstances. However, the limit of accuracy under most circumstances is ± 0.1 pH unit (APHA 1985). A precision of 0.1 pH unit is considered acceptable (U.S. EPA 1979b).

Measurements of pH are reliable only when the instrument has been calibrated by standard buffers bracketing the desired range. Samples having a pH greater than 10 may require a special probe to correct for "sodium" error. However, pH values as high as 10 are not likely to be encountered in most coastal waters.

It is recommended that pH values be reported to the nearest 0.1 unit. In addition, the ambient temperature at the time of measurement of each

sample should be reported to the nearest degree C. Results of all determinations should be reported, including QA replicates. Any factors that may have influenced sample quality should also be reported.

Salinity

Field Procedures--

Collection--Two kinds of bottles are acceptable for collecting salinity samples. The first is made of borosilicate glass and has an airtight septum stopper. The second is made of low-pressure polyethylene and has polyethylene inserts in the screw caps. Soft glass bottles, high-pressure polyethylene bottles, and ground glass stoppers should not be used.

Prior to sampling, the collection bottles should be "seasoned" by filling them with seawater. Bottles should remain upside down in the case until the sample is taken. Bottles with chipped edges or loose caps should not be used.

Each collection bottle and cap should be rinsed at least three times with sample water before the sample is collected. No salt crystals should remain on the bottle or stopper. The bottle and stopper should not be contaminated by contact with any surface. If contamination occurs, the rinsing step should be repeated.

After the bottle and stopper have been rinsed thoroughly, the bottle should be filled to approximately 90 percent of the bottle volume with sample and sealed. The stopper should be double-checked for a tight fit. The external label on each bottle should be filled out completely.

Processing--No reagents are necessary to preserve the salinity samples. Bottles should be stored upright after samples have been collected. If necessary, properly sealed salinity samples can be stored indefinitely before analysis (Strickland and Parsons 1972).

Laboratory Procedures--

Analytical Procedures--The salinometer manufacturer should provide a detailed description of how to use the instrument. To avoid heating the sample bottle, it should be propped up rather than gripped by hand during the salinity determination. The sample cell bowl should be filled slowly to avoid introducing bubbles. The cell should be rinsed thoroughly with distilled water between successive samples.

Calibration and Preventive Maintenance--Calibration procedures should follow the specifications given by the manufacturer of the salinometer. It is recommended that the primary standard be Copenhagen seawater and that all secondary standards be based on this primary standard. Secondary standards should consist of filtered seawater collected from the open ocean at a depth of at least 50 m (APHA 1985) and should be periodically checked against the primary standard to guard against contamination or drift. The secondary standards should be equilibrated to the temperature of the samples before calibration begins. Secondary standards should be stored in glass containers and protected from evaporation and light.

Preventive maintenance procedures should follow the salinometer manufacturer's recommendations. These include periodic cleaning of the sample cell bowl, greasing the threads on the water-trap jar, tightening all water connections, checking the temperature circuit calibration, and lubricating the pump, pump motor, and stirrer motor. It is critical that the sample cell bowl be kept clean. Normally, the bowl should be cleaned daily. However, if the sample water is very dirty, hourly cleaning may be necessary.

Quality Control Checks--Two standard sample determinations should be made before the start of each series of samples. In addition, one standard sample should be analyzed after each group of 10 successive samples, to monitor instrument drift. It is recommended that duplicate determinations be made for at least 10 percent of the samples analyzed.

Corrective Action--If the salinometer does not appear to be operating properly, the manufacturer's troubleshooting guide should be consulted. Several common problems include failure of the null indicator to show a deflection, failure of the thermometer circuit, excessive salinity balance drift, inability to fill the sample cell completely, and failure of the stirrer to operate properly.

Data Quality and Reporting--It is recommended that salinity determinations be made using an induction salinometer. Other, less common procedures include the hydrometric and argentometric methods see Methods 210B and 210C of APHA 1985).

A precision of ±0.1 ppt is possible using an induction salinometer. Conductivity measurements should be converted to salinity values using standard tables corrected for temperature. If possible, salinity concentrations should be reported in ppt to the nearest 0.01 unit. Results of all determinations should be reported, including QA replicates and standards. Any factors that may have influenced sample quality should also be reported.

Temperature

Field Procedures--

Collection--Temperature can be measured using a mercury-filled Celsius thermometer on samples collected in glass or plastic containers. The thermometer should have a scale etched on capillary glass for 0.1° C increments and a minimal thermal capacity to permit rapid equilibration. Temperature can be measured *in situ* using a reversing thermometer or a thermistor. Of these two *in situ* instruments, the thermistor is more accurate, but also more expensive.

Processing--Because temperature can change rapidly after a sample is removed from ambient conditions, temperature determinations by thermometer should be made immediately after sample collection.

Laboratory Procedures--

Analytical Procedures--Methods for making temperature measurements are described in U.S. EPA Method 170.1 and in APHA Method 212. It is critical that the measuring device be adequately immersed in the sample and allowed to completely equilibrate (i.e., the temperature reading stabilizes) before temperature is determined.

Calibration and Preventive Maintenance--Each kind of temperature-measuring instrument should be calibrated frequently against a National Bureau of Standards (NBS) certified thermometer that is used with its certificate and correction chart. An NBS thermometer is recommended because some commercial thermometers may be as much as 3° C in error (APHA 1985).

To prevent breakage, it is recommended that each thermometer be enclosed in a metal case. If a mercury thermometer is broken, samples or containers in the vicinity of the exposed area may be contaminated by the mercury.

Quality Control Checks--Each temperature-measuring instrument should be calibrated against a NBS standard thermometer at least every week. It is recommended that calibration be conducted daily when a temperature violation is suspected.

Corrective Action--If the temperature-measuring instrument cannot be calibrated consistently against the NBS thermometer, it should be repaired or replaced.

Data Quality and Reporting--Precision and accuracy have not been determined for temperature measurements (U.S. EPA 1979b). If possible, temperature measurements should be reported to the nearest 0.01° C. Results of all determinations should be reported, including QA replicates and standard checks. Any factors that may have influenced sample quality should also be reported.

Color

Field Procedures--

Collection--Color samples should be collected from the water sampler in glass or plastic bottles. Bottles should be cleaned thoroughly before use. Because biological activity may change color characteristics, samples should be collected and analyzed as soon as possible after the sampler is brought on board. It is recommended that color samples be collected immediately after dissolved oxygen and pH samples.

Processing--Because no reagents can be added to preserve color, samples should be analyzed as soon as possible after collection. If a delay occurs, samples should be held at 4° C for no more than 24 h. The length of delay should be recorded on the log sheet.

Laboratory Procedures--

Analytical Procedures--Color should be determined using the spectrophotometric methods described in U.S. EPA Method 110.3 and in APHA Method 204B.

The recommended method of color analysis is very sensitive to turbidity. However, the optimum filter media to remove turbidity without removing color has not been found. Recommended methods include filtration through a 0.45-um filter and centrifugation. The spectrophotometric method is also sensitive to sample pH.

Calibration and Preventive Maintenance--For the spectrophotometric method, the instrument should be set to read 100-percent transmittance on a distilled water blank. All determinations should be made within a narrow spectral band.

Preventive maintenance procedures for the spectrophotometer should follow the manufacturer's recommendations.

Quality Control Checks--It is recommended that duplicate color determinations be made on at least 10 percent of the total samples analyzed.

Corrective Action--If the spectrophotometer does not appear to be operating properly, the manufacturer's troubleshooting guide should be consulted.

Data Quality and Reporting--At present, precision and accuracy data are not available for the spectrophotometric method (U.S. EPA 1979b). Results of this method should be reported at pH 7.6 and at the original pH in terms of dominant wavelength hue (to the nearest 1.0 nm), luminance (to nearest 0.1 percent), and purity (to nearest 1.0 percent). In addition, the kind of spectrophotometer, number of selected ordinates (10 or 30), and the spectral band width (nm) should also be reported. Results of all determinations should be reported, including QA replicates. Any factors that may have influenced sample quality should also be reported.

Transparency

Transparency is measured using a Secchi disk. This device is a circular plate with a standard diameter of 30 cm (U.S. Navy 1968). The top side of the disk should be white. A ring attached at the center of the disk allows a graduated line to be secured. A 2-4 kg weight should be attached centrally to the underside of the disk to ensure that the device will sink rapidly and vertically. The deployment line should be made of material that will not stretch substantially after repeated use (e.g., braided dacron).

Transparency measurements should be made by lowering the Secchi disk from the shaded side of the survey vessel until the disk is barely perceptible. This depth should be recorded to the nearest 0.5 m and the disk should continue to be lowered until it is no longer visible. The disk should then be raised slowly until it is again barely visible. This second depth should also be recorded. The average of the two depth readings (i.e., downward and upward) should be reported to the nearest 0.5 m as the measured transparency value.

Because Secchi disk readings are dependent upon the available illumination, they vary with time of day, cloud formation, and cloud cover. Secchi disk readings also vary with the observer because of interpersonal differences in visual ability. Thus, to standardize these readings, repeated measurements should be made by one individual under similar conditions of illumination. Because these criteria are not always achievable, associated meteorological data at the time of measurement and the name of the person making the determinations should be included on the log sheet with the Secchi disk readings.

Turbidity

Field Procedures--

Collection--Turbidity samples can be collected in glass or plastic containers. Samples should be removed from the sampler as soon as possible after collection to minimize settling of suspended material within the sampler. Sample containers and lids should be rinsed thoroughly with sample water before samples are collected. Turbidity can be estimated *in situ* as transmissivity using a transmissometer. A discussion of such *in situ* instrumentation is provided earlier in the general methods section.

Processing--Because turbidity samples cannot be preserved adequately, they should be analyzed as soon as possible after collection. If a delay occurs, samples should be held at 4° C for no more than 48 h to minimize microbiological decomposition of solids. The length of delay should be noted on the log sheet.

Laboratory Procedures--

Analytical Procedures--The nephelometric method is described in U.S. EPA Method 180.1 and in APHA Method 214A. For turbidities greater than 40 NTU, samples should be diluted with one or more volumes of turbidity-free water until the turbidity falls below 40 NTU. Turbidity-free water is distilled water passed through a membrane filter with a 0.2-um pore size. Samples should be shaken well to thoroughly disperse solids, and resulting air bubbles should be allowed to dissipate before the sample is analyzed.

Interference with turbidity measurements arises from several sources. Because the presence of floating debris and coarse sediments that settle out rapidly will give low readings, readings should be made as soon as possible after sample agitation. Finely divided air bubbles will affect results in a positive direction. If present, the bubbles should be allowed to dissipate before a reading is made. Finally, dissolved substances that

absorb light in the sample will reduce turbidity readings. Any color in the sample should therefore be noted.

Calibration and Preventive Maintenance--It is recommended that a standard suspension of formazin be used to calibrate the nephelometer. Formazin provides a more reproducible turbidity standard than do other materials used in the past. The formazin standard suspension should be prepared daily (APHA 1985). Commercially available standards such as styrene divinylbenzene beads (trade name AMCO-AEPA-1), can be substituted for formazin if they are demonstreated to be equivalent to freshly prepared formazin (APHA 1985). Standards measured on the nephelometer should cover the range expected for the samples. At least one standard should be run in each instrument range to be used. The instrument should give stable readings in all sensitivity ranges used. If a precalibrated scale is not supplied, calibration curves should be prepared for each instrument range to be used.

Quality Control Checks--The nephelometer should be calibrated at the start of each series of analyses and after each group of 10 successive samples. Duplicate analyses should be conducted on at least 10 percent of the total number of samples.

Corrective Action--If the nephelometer will not stabilize in any of the relevant ranges or if the instrument does not appear to be functioning properly in any other aspect, the manufacturer's troubleshooting guide should be consulted. Sample tubes that become scratched or etched should be replaced.

Data Quality and Reporting--Because the nephelometric method of turbidity measurement is more sensitive than the visual method, the former is recommended. Limited precision data indicate that standard deviations of measurements vary directly with the level of turbidity (U.S. EPA 1979b). Accuracy data are not available at present. The sensitivity of the nephelometer should allow detection of a turbidity difference of 0.02 unit or less in waters with turbidities less than 1.0 unit. Results should be reported

in nephelometric turbidity units (NTU). U.S. EPA Method 180.1 describes the nearest reporting units as a function of the range of values measured. Results of all determinations should be reported, including QA replicates. Any factors that may have influenced sample quality should also be reported.

Total Suspended Solids (TSS)

Field Procedures--

Collection--Samples should be collected in glass or plastic bottles. Samples should be collected soon after the sampler is brought on board to minimize settling of suspended material within the sampler. Nonrepresentative particulates such as leaves and sticks should be noted, and then excluded from the sample.

Processing--Total suspended solids samples cannot be preserved adequately and should therefore be analyzed as soon as possible after collection (APHA 1985). If a delay occurs, samples should be held at 4° C to minimize microbiological decomposition of solids. The length of delay should not exceed 7 days and should be noted on the log sheet.

Laboratory Procedures--

Analytical Procedures--Suspended solids determination should be made according to procedures described in U.S. EPA Method 160.2 and APHA Method 209C. However, a 0.40- or 0.45-um membrane filter should be used to remove suspended solids instead of the glass fiber filter specified in the U.S. EPA and APHA methods. These filters are the ones used most commonly for oceanographic work in coastal waters.

The drying temperature of the filtered residue can influence results because temperature and time of heating affect weight losses due to volatilization of organic matter, mechanically occluded water, water of crystallization, and gasses from heat-induced chemical decomposition, as well as weight gains due to oxidation (APHA 1985). Thus, drying temperature must be carefully controlled and not allowed to deviate from the recommended range of 103-105° C.

To avoid contamination, filters should be handled with forceps during all steps from initial to final weight determinations. Filters should

always be stored in a desiccator when cooling. When filtering the samples, it is critical that the filter is seated tightly on the surface of the filtration apparatus and that all holes in the crucible are covered. To ensure complete removal of salts after filtering the sample, the filter should be rinsed with a minimum of three successive 20-mL portions of distilled water. It is recommended that enough water be filtered to ensure that at least 5 mg of residue is collected. Because excessive residue on the filter may form a water-entrapping crust, the sample size should be limited to that which yields less than 200 mg of residue (APHA 1985). Prolonged filtration times resulting from filter clogging may produce high results due to excessive solids capture on the clogged filter. Therefore filtering should be terminated before any evidence of clogging is noted.

Calibration and Preventive Maintenance--The analytical balance should be calibrated weekly using standard weights according to the manufacturer's instructions. It is recommended that the balance have a minimum accuracy of 0.1 mg. The manufacturer's preventive maintenance procedures should be followed carefully.

Quality Control Checks--For each weight determination, filters should be run repeatedly through the drying/cooling cycle until the weight loss is less than 4 percent of the previous weight or 0.5 mg, whichever is less (APHA 1985). Duplicate analyses should be conducted on at least 10 percent of the total number of samples. A filter blank should be taken through the preparation, drying, and desiccation steps for each batch of samples to monitor changes in filter tare weight. U.S. EPA reference samples should be analyzed quarterly to check the overall accuracy of the method.

Corrective Action--If the analytical balance will not produce repeatable measurements within 0.1 mg, the manufacturer's troubleshooting guide should be consulted. If the filter becomes clogged during filtration, it should be discarded and the analysis should be repeated using a clean filter. To prevent clogging of the second filter, the volume of sample analyzed should be reduced.

If the weight of the filter blank is not consistent after drying and cooling, the desiccant should be checked. A color-indicating desiccant is recommended, so that spent desiccant is easily detected. Also, the seal on the desiccator should be checked and, if necessary, ground glass rims should be greased or "O" rings replaced. Cooling time should be closely monitored, so weighing times are consistent between batches of samples, thereby minimizing the need for multiple weighings.

Data Quality and Reporting--Precision of results varies directly with the concentration of suspended matter and, at low levels, the ratio of the weight of the suspended matter to the weight of the filter. There are no procedures for determining the accuracy of field measurements of suspended matter. Total suspended solids measurements should be reported as mg/L to a minimum of two significant figures. Results of all determinations should be reported including QA replicates and filter blanks. Any factors that may have influenced sample quality should also be reported.

Settleable Solids

Field Procedures--

Collection--Settleable solids samples should be collected in 1-L glass or plastic containers. The sample container selected for use should be checked to ensure that material in suspension does not adhere to the container walls. Samples should be collected soon after the sampler is brought on board, to minimize settlement of suspended material within the sampler. Nonrepresentative particulates such as leaves and sticks should be noted and then excluded from the sample.

Processing--Settleable solids samples cannot be preserved adequately and should therefore be analyzed as soon as possible after collection (APHA 1985). If a delay occurs, samples should be held at 4° C to minimize microbiological decomposition of solids. The length of delay should not exceed 48 h and should be noted on the log sheet.

Laboratory Procedures--

Analytical Procedures--Procedures used to determine settleable solids concentrations are presented in U.S. EPA Method 160.5 and in APHA Method 209E. The sample should be well-mixed before introduction to the Imhoff cone. It is critical that floating material is not included with settleable material.

Calibration and Preventive Maintenance--Not applicable.

Quality Control Checks--Duplicate analyses should be conducted on at least 10 percent of the total number of samples.

Corrective Actions--If suspended material is found to adhere to the sides of the sample collection containers, a different type of container should be used.

Data Quality and Reporting--The practical lower limit of measurement depends on sample composition and generally is in the range of 0.1 to 1.0 mL/L (APHA 1985). Precision and accuracy data are not available at present. Settleable solids concentrations should be reported as mL/L to a minimum of two significant figures. Results should be reported for all determinations, including QA replicates. Any factors that may have influenced sample quality should also be reported.

Floating Particulates

Field Procedures--

Collection--A minimum of 5 L of sample should be collected in a glass or plastic container. The container should be rinsed thoroughly with sample water before sample collection.

Processing--For comparable results, samples must be treated uniformly throughout sampling and handling. Analyses should be conducted as soon as possible after sample collection.

Laboratory Procedures--

Analytical Procedures--Floating particulates should be analyzed in accordance with APHA Method 206A. At present, this method is tentatively recommended by APHA. Because even slight differences in sampling and handling can give large differences in measureable floating particulates, all samples should be treated uniformly, preferably by adequately mixing them before flotation. When mixing the sample, care should be taken to avoid extensive air entrapment through formation of a large vortex. Because temperature variations can affect results, all tests should be conducted at a constant temperature, preferably 20° C.

Calibration and Preventive Maintenance--No calibration procedures apply to the recommended method. To prevent oil and grease from sticking to the analytical equipment, all internal surfaces should be coated with TFE.

Quality Control Checks--It is recommended that duplicate analyses be conducted on a minimum of 5 percent of the total number of samples, with an additional 5 percent of the samples checked for recovery.

Corrective Actions--If oil and grease appear to be sticking to surfaces, TFE coatings should be renewed. If recovery drops below 90 percent, samples should be reanalyzed and each step of the analysis carefully scrutinized.

Data Quality and Reporting--The minimum detectable concentration of floating particulates using the recommended method is 1 mg/L. Precision varies with the concentration of suspended matter in the sample. A coefficient of variation of 5.7 percent has been achieved using five replicate samples (APHA 1985). Although there is no completely satisfactory procedure for determining the accuracy of the method, approximate recovery can be determined by running a second test for floatables on all water discharged throughout the analytical procedures, except for the last 10 mL. Typical recoveries exceed 90 percent (APHA 1985). Concentrations of floating particulates should be reported in mg/L to the nearest 0.1 unit. Results of all determinations should be reported, including QA replicates and recovery checks. Any factors that may have influenced sample quality should also be reported.

Dissolved Oxygen (Winkler Method)

Field Procedures--

Collection--Prior to sample collection, the fixing reagents should be prepared and the dispensing apparatus should be filled. The accuracy of the volumes being dispensed should be checked and no air should be trapped in the system. It is recommended that 300-mL glass BOD bottles with ground glass stoppers be used for the Winkler method.

Oxygen samples must be the first ones collected from the sampler and they should be collected immediately after the sampler is brought on board. It is recommended that a piece of soft-walled rubber tubing be connected to the discharge valve of the sampler to prevent air bubbles from contaminating the sample during collection. The tubing should be soaked in seawater prior to use to prevent air bubbles from collecting inside.

After being attached to the sampler, the tubing should be flushed with sample water to remove air bubbles. The sample bottle and stopper should then be rinsed thoroughly with sample water. After rinsing, the tubing should be inserted to the bottom of the sampling bottle. The bottle should be filled slowly until at least half full, and then filled rapidly thereafter. At least one full bottle volume of sample should overflow the bottle before the tubing is removed. After the tubing is removed slowly, the stopper should be carefully put in place with a twisting motion while water is displaced from the bottle. Once stoppered, the sample should be checked for air bubbles. If bubbles are present, the sample should be discarded and a new sample collected. Acceptable samples should be fixed as soon as possible after collection.

Processing--The stopper should be carefully removed from the bottle without agitating the sample. Each fixing reagent should be added by gently placing the tip of the pipet slightly below the surface of the sample and gently pushing the plunger. The plunger should not be released until the

pipet has been removed from the sample. The pipet tip should be rinsed with distilled water before being returned to the reagent bottle.

After the fixing reagents have been added, the bottle should be carefully stoppered without introducing air bubbles. Excess fluid around the outside of the stopper should be poured off and the sample bottle should be inverted 5-10 times to thoroughly disperse the precipitate. It is also good practice to invert bottles several times approximately 20 min after fixation to ensure thorough dispersion of the precipitate.

After allowing the precipitate to settle for 10-15 min, the stopper should be removed and sulfuric acid should be added to the sample in the same manner as the fixing reagents. The stopper should then be replaced and the bottle inverted until all of the precipitate has dissolved. If the precipitate fails to dissolve, it should be allowed to settle again and additional sulfuric acid should be added to the sample. It is critical that all of the precipitate be dissolved before samples are stored. Also, it is critical that samples not be allowed to stand longer than 8 h before sulfuric acid is added, as erroneous measurements may result.

Preserved dissolved oxygen samples should be stored in the dark at 10-20° C. Samples should be analyzed as soon as possible after collection, and storage time should not exceed 8 h. The length of storage should be recorded on the log sheet.

Laboratory Procedures--

Analytical Procedures--The recommended modified Winkler method for saline water is described in detail in Strickland and Parsons (1972).

Calibration and Preventive Maintenance--Methods of standardizing the thiosulfate solution are presented by Strickland and Parsons (1972). It is recommended that one person perform the standard and sample titrations because of subjectivity in the color of the endpoint.

Preventive maintenance is limited to ensuring that reagent dispensing and titrating equipment is clean and functions properly.

Quality Control Checks--All standard titrations should be duplicated. It is recommended that duplicate analyses be conducted on at least 10 percent of the total samples. Four replicate reagent blanks should be run once a week during a cruise, or whenever a reagent is changed.

Corrective Action--I the results obtained by running duplicate standard titrations of the thiosulfate solution do not agree within ±0.05 mL, the titrations should be repeated until agreement is achieved. All reagent dispensers should be checked for bubbles, and the amounts of reagents delivered should be verified.

Data Quality and Reporting--Using the modified Winkler method, reproducibility for field samples is approximately 0.2 mg/L of dissolved oxygen at the 7.5 mg/L level (U.S. EPA 1979b). Duplicate titrations made during standardization of reagents should agree within ±0.05 mL. With careful collection and treatment of samples, dissolved oxygen as low as 1 percent of saturation can be measured. Dissolved oxygen concentrations should be reported in mg/L to the nearest 0.1 unit. Results should be reported for all determinations, including QA replicates and reagent blanks. Any factors that may have influenced sample quality should also be reported.

Dissolved Oxygen (Probe Method)

Field Procedures--

Collection--Oxygen samples should be the first ones collected from the sampler and they should be collected immediately after the sampler is brought on board. It is recommended that a piece of soft-walled rubber tubing be connected to the discharge valve of the sampler to prevent air bubbles from contaminating the sample during collection. The tubing should be soaked in seawater prior to use to prevent air bubbles from collecting inside.

After being attached to the sampler, the plastic or rubber tubing should be flushed with sample water to remove air bubbles. The sample bottle and stopper should then be rinsed thoroughly with sample water. After rinsing, the tubing should be inserted to the bottom of the sampling bottle. The bottle should be filled slowly until at least half full, and then filled rapidly thereafter. At least one full bottle volume of sample should overflow the bottle before the tubing is removed. After the tubing is slowly removed, the stopper should be carefully put in place with a twisting motion while water is displaced from the bottle. Once stoppered, the sample should be checked for air bubbles. If bubbles are present, the sample should be discarded and a new sample collected.

Processing--Because no reagents are used to preserve the oxygen samples, analyses should be conducted immediately after collection. If a delay occurs, it should be noted on the log sheet.

Laboratory Procedures--

Analytical Procedures--Detailed analytical procedures should be provided by the manufacturer of the dissolved oxygen meter. General procedures are listed in U.S. EPA Method 360.1 and APHA Method 421F.

Several precautions should be taken when making measurements with a membrane electrode. First, constant turbulence should be provided by a stirrer to ensure precise measurements. Second, adequate time should be allowed for the instrument to warm up before measurements are started and, when individual samples are analyzed, for the probe to stabilize to sample temperature and dissolved oxygen. Third, reactive gases, such as chlorine and hydrogen sulfide, pass through the membrane probes and may interfere with the analysis or desensitize the probe. Finally, broad variations in the kinds and concentrations of salts in samples can influence the partial pressure of oxygen in samples and thereby affect measurement accuracy.

Calibration and Preventive Maintenance--Calibration procedures should follow the instructions given by the manufacturer of the dissolved oxygen meter. The meter generally can be calibrated using one of three methods: Winkler titration, saturated water, or air. The air method is simplest and quite reliable. Overall error is diminished when the probe and instrument are calibrated under conditions of temperature and dissolved oxygen that match those of the samples. Calibration can be disturbed by physical shock, touching the membrane, or desiccation of the electrolyte.

Preventive maintenance procedures should follow the manufacturer's recommendations. The oxygen probe should always be stored in a humid environment to prevent drying out and the need to frequently replace membranes.

Quality Control Checks--The instrument should be calibrated at the beginning of each series of measurements and after each group of 10 successive samples. Duplicate measurements should be made on at least 10 percent of the total number of samples.

Corrective Action--If the dissolved oxygen meter does not appear to be operating correctly, consult the manufacturer's troubleshooting guidelines for remedial actions.

Data Quality and Reporting--Repeatability of dissolved oxygen measurements using a membrane electrode should be 0.1 mg/L and accuracy should be ±1 percent (U.S. EPA 1979b). Sensitivity of the electronic readout meter for the output from the dissolved oxygen probes should normally be 0.05 mg/L (U.S. EPA 1979b). Dissolved oxygen concentrations should be reported in mg/L to the nearest 0.1 unit. Results should be reported for all determinations, including QA replicates. Any factors that may have influenced sample quality should also be reported.

Biochemical Oxygen Demand (BOD)

Field Procedures--

Collection--BOD samples can be collected in glass or plastic containers. Sample containers and caps should be rinsed thoroughly with sample water before sample collection.

Processing--BOD samples should be analyzed immediately after collection. If a delay occurs, samples should be held at 4° C to minimize reduction of BOD. Samples should not be stored for more than 48 h and the length of storage should be recorded on the log sheet. Refrigerated samples should be warmed to 20° C prior to analysis.

Laboratory Procedures--

Analytical Procedures--BOD concentrations should be determined according to U.S. EPA Method 405.1 or APHA Method 507. Generally seawater samples require no dilution. Samples having more oxygen-demanding materials than the amount of oxygen in air-saturated water should be diluted to balance the oxygen demand and supply. If samples are diluted, nutrient addition (i.e., nitrogen, phosphorus, trace metals) and pH buffering of the dilution water are necessary to ensure that the sample is suitable for bacterial growth. To prevent air from infiltrating the incubation bottles, a water seal should be used. When samples are incubating, all light should be excluded to prevent photosynthetic production of oxygen. Samples containing residual chlorine must be dechlorinated (e.g., using sodium thiosulfate).

Calibration and Preventive Maintenance--Dissolved oxygen concentrations should be measured on all dilution water blanks and seed controls if applicable. Generally, seawater samples require no dilution of seed. Therefore to monitor the method, a glucose-gultamic acid standard check solution should be incubated with each batch of samples. Dissolved oxygen measurements

should be calibrated according to accepted procedures (e.g., see descriptions of the Winkler and probe methods in this document).

Quality Control Checks--The dilution water blank and the glucose-glutamic acid standard provide quality control on the dilution water as well as on the cleanliness of analytical equipment (e.g., incubation bottles). Each sample should be analyzed in triplicate to monitor precision. Optimal uptake is at least 2 mg/L after the incubation, with a residual-oxygen concentration of at least 1 mg/L in the sample. Duplicate analyses should be conducted on at least 10 percent of the total number of samples.

Corrective Action--APHA (1985) should be consulted for methods of correcting the many kinds of interference that may accompany BOD analyses.

If the dilution water blanks exceed 0.2 mg/L, cleanliness of containers and water should be checked. Containers may require 1+1 HCl rinse after detergent washing to remove any residual organic material. Any containers rinsed with acid should be thoroughly rinsed with distilled water to prevent acid carryover.

If a 2-percent dilution of the glucose-glutamic acid standard check solution is outside the range of 200 $\pm$ 37 mg/L, BOD determinations made with the seed and dilution water should be rejected. Several methods used to determine the problem include running a series of dilution water blanks using different water sources with and without seed, preparing a fresh solution of glucose-glutamic acid, changing the seed, or preparing fresh reagents for the dilution water. The source of the problem should be determined before additional BOD analyses are performed.

Data Quality and Reporting--Precision data for spiked natural waters indicate that standard deviations of $\pm$0.7 and $\pm$26 can be achieved for BOD concentrations of 2.1 and 175 mg/L, respectively (U.S. EPA 1979b). There is no acceptable method for determining the accuracy of the BOD test. BOD data should be reported as mg/L to the nearest 0.1 unit. Results should

be reported for all determinations, including QA replicates, dilution water blanks, and glucose-glutamic acid standards. Any factors that may have influenced sample quality should also be reported.

Oil and Grease

Field Procedures--

Collection--Samples should be collected in glass bottles. Bottles should first be washed with a warm aqueous detergent mixture, and then, in sequence, thoroughly rinsed with hot tap water, rinsed at least twice with distilled water, rinsed with 1,1,2-trichloro-1,2,2-trifluoroethane (i.e., Freon or equivalent), and dried in a clean oven at $\geq 105^{\circ}$ C for 30 min. Bottle caps should be lined with TFE-coated cardboard inserts or aluminum foil. Plastic containers are not acceptable. Headspace should be left in each sample container for addition of acid and mixing.

Processing--Acidify the sample in the collection bottle to a pH <2 using sulfuric or hydrochloric acid. Samples should be stored in the dark at 4° C. Recommended maximum holding time is 28 days (U.S. EPA 1984). The length of storage should be recorded on the log sheet.

Laboratory Procedures--

Analytical Procedures--Oil and grease should be measured according to U.S. EPA Methods 413.1 and 413.2 or APHA Methods 503A and 503B. Because asphaltic materials are insoluble in Freon, recommended methods will give low recoveries for samples containing such material. The gravimetric method for oil and grease measures relatively nonvolatile hydrocarbons, vegetable oils, animal fats, waxes, and soaps. The method is often used for wastewater analyses because it requires minimal instrumentation and calibration. Sulfur causes interference for the gravimetric method because it will be extracted and included as oil and grease. Light hydrocarbons that volatilize at temperatures below 70° C (e.g., gasoline through No. 2 fuel oil) are lost during the solvent removal step.

The infrared oil and grease procedure is more precise at lower concentrations (1-10 mg/L) than the gravimetric oil and grease procedure. The

infrared method will give higher results than the gravimetric method if the sample contains volatile components, and will give lower results if the sample is high in sulfur content. A limitation to the infrared determination is the method of standardization, which requires a prepared reference oil. The reference oil may not be comparable to the type of oil and grease in the samples, resulting in inaccurate results.

Calibration and Preventive Maintenance--For gravimetric oil and grease analyses, check accuracy of the analytical balance periodically (minimum of once per week recommended) using Class S weights. A service contract that includes scheduled preventive maintenance at least once per year is recommended. Scratched, chipped, or cracked boiling flasks should be replaced. For infrared oil and grease analyses, follow the manufacturer's preventive maintenance procedures for the infrared spectrophotometer. Cells used for analysis should be checked for scratches each time they are used. Scratched cells should not be used. For infrared analyses, calibration should be performed as specified in U.S. EPA Method 413.2, Section 6.4.

Quality Control Checks--Duplicate samples should be collected and performed at a minimum of every 10 samples to establish an estimate of precision. Because samples should not be split after collection, separate grab samples should be taken for analysis.

Distilled water spiked with a U.S. EPA performance sample or reference oil should be extracted and analyzed every 20 samples to monitor recovery. Bottles should be checked for cleanliness by analyzing distilled water that has been acidified in a sample bottle. A solvent blank should accompany each batch of samples. A procedural blank should be run with each batch of samples to monitor reagent contamination or procedural problems.

Corrective Action--If oil and grease concentrations in procedural blanks are greater than the detection limit, check the cleanliness of all glassware. Always use separatory funnels with TFE stopcocks to avoid contamination from stopcock grease. For infrared analyses, severe interferences

will result if Freon contacts any material containing plasticizers (e.g., plastic tubing). For gravimetric analyses, high results will be obtained if any Freon or fumes remain in the flask after distillation.

If difficulty occurs with emulsions during solvent extraction, follow procedures described in the methods. If the emulsion still fails to dissipate after addition of salts, gently turn the separatory funnel to the horizontal position and slowly rotate. Be careful to keep the stopper securely in place.

If precision or recovery from spike results is poor, check adequacy of extraction by increasing shaking time.

Data Quality and Reporting--The definition of oil and grease is based on the procedures used. Unless identical procedures are used, oil and grease determinations are not intercomparable. Therefore, the method used for analysis should always be specified.

Objectives for precision and accuracy are indicated below:

- Reproducibility for the gravimetric method using distilled water spikes is ±18-percent coefficient of variation (U.S. EPA 1983). These results probably overestimate the precision possible with effluent samples. No precision data are reported by the U.S. EPA for the infrared method.

- Interlaboratory recovery results were 102±37 percent at 6.0 mg/L and 97±35 percent at 18.0 mg/L for the gravimetric method (U.S. EPA 1983).

Measurements should be reported to a minimum of two significant figures in mg/L. Detection limits are in the range of 5 mg/L for gravimetric oil and grease determinations (U.S. EPA Method 413.1), and 0.2 mg/L for infrared determinations (U.S. EPA Method 413.2). Results of all determinations

should be reported, including QA replicates, blanks, spiked samples, and reference measurements. Any factors that may have influenced sample quality should be reported.

Nitrogen (Ammonia)

Field Procedures--

Collection--Ammonia samples can be collected in glass or plastic bottles. Each bottle and cap should be rinsed thoroughly with sample water prior to sample collection.

Processing--Results of ammonia analyses are most reliable when they are made on fresh samples. However, if analysis must be delayed, samples can be stored for up to 28 days by acidification to pH<2 with sulfuric acid and refrigeration at 4° C. The length of delay before analysis should be recorded on the log sheet.

Laboratory Procedures--

Analytical Procedures--Manual distillation of effluent samples prior to ammonia determinations is required by the U.S. EPA, unless data on file demonstrate that distillation is not required. Distillation is recommended due to the sensitivity of ammonia procedures to color and possible interferences in the effluent. Following distillation at pH 9.5, ammonia concentration in saline water can be determined by U.S. EPA Methods 350.1, 350.2, or 350.3 or APHA Methods 417A, 417B, 417D, or 417G. The methods should be consulted to determine which is most appropriate for available equipment, expected concentrations, and expected levels of precision and accuracy.

Calibration and Preventive Maintenance--Calibration procedures should follow those specified in the method. If samples are being distilled, standards should also be distilled prior to analysis to check for ammonia contamination or loss during processing. Concentrations of the calibration standards should bracket the sample concentrations. If a sample concentration is outside the range of calibration, then an additional calibration standard should be analyzed to check if the result is within the linear range of

the method. Alternatively, the sample should be diluted to within the calibration range and then reanalyzed.

Quality Control Checks--Duplicate analyses should be conducted on a minimum of 5 percent of the total number of samples, with an additional 5 percent of the samples spiked and analyzed for percent recovery. A blank should be analyzed with each batch of samples. A U.S. EPA performance sample should be analyzed at least once per quarter.

Corrective Action--Contamination of ammonia samples can occur easily due to the volatile nature of ammonia. To prevent possible cross-contamination, reagents used for other analyses that contain ammonia (e.g., colorimetric phenol) should be isolated from samples and standards used for ammonia determinations. In addition, cleaning preparations that contain significant quantities of ammonia (e.g., Pinesol, wax removers) should not be used in the laboratory area where ammonia determinations are performed.

Contaminated glassware should be rinsed with 1+1 HCl and then with distilled water. To check for contamination, blanks should be analyzed whenever a new reagent is prepared.

Data Quality and Reporting--Detection and accurate quantification of ammonia in receiving water is routinely attainable, although method detection limits can vary widely because of methods or instrumentation. The analytical method should be consulted to determine expected detection limits, precision, and accuracy. Data should be reported in mg/L as N to a maximum of three significant figures. Results should be reported for all determinations, including QA replicates and spiked samples. Any factors that may have influenced sample quality should also be recorded.

Nitrogen (Total Kjeldahl)

Field Procedures--

Collection--Kjeldahl nitrogen samples can be collected in glass or plastic containers. Caps should be unlined, as paper and/or glue may interfere with the analysis. Each container and cap should be rinsed thoroughly with sample water prior to sample collection.

Processing--If possible, samples should be analyzed immediately after collection. If immediate analysis is not possible, samples can be stored up to 28 days by acidification to pH<2 with sulfuric acid and refrigeration at 40 C. The length of delay before analysis should be recorded on the log sheet.

Laboratory Procedures--

Analytical Procedures--Approved test procedures for the analysis of total Kjeldahl nitrogen in saline water include U.S. EPA Methods 351.1 and 351.3 and APHA Methods 417B, 417D, 417E, 420A, or 420B. The methods should be consulted to determine which is most appropriate for available equipment, expected concentrations, and expected levels of precision and accuracy.

Calibration and Preventive Maintenance--Calibration procedures should follow those specified in the method. If samples are being digested and distilled, standards should also be digested and distilled prior to analysis to check for ammonia contamination or loss during distillation. Concentrations in the calibration standards should bracket the sample concentrations. If a sample concentration is outside of the range of calibration, then an additional calibration standard should be analyzed to check if the result is within the linear range of the method. Alternatively, the sample should be diluted to within the calibration range and then reanalyzed.

Quality Control Checks--Duplicate analyses should be conducted on a minimum of 5 percent of the total number of samples, with an additional 5 percent of the samples spiked and analyzed for percent recovery. A blank should be analyzed with each batch of samples. A U.S. EPA performance sample should be analyzed at least once per quarter.

Corrective Action--Because ammonia is a component of Kjeldahl nitrogen, precautions against contamination that were described for ammonia analyses should be followed.

Data Quality and Reporting--The detection and accurate quantification of Kjeldahl nitrogen in receiving water is routinely attainable, although method detection limits can vary widely because of methods or instrumentation. The analytical method should be consulted to determine expected detection limits, precision, and accuracy. Data should be reported in mg/L as N to a maximum of three significant figures. Results should be reported for all determinations, including QA replicates, blanks, and spiked samples. Any factors that may have influenced sample quality should also be recorded.

Nitrogen (Nitrate and Nitrite)

Field Procedures--

Collection--Nitrate-nitrite samples can be collected in glass or plastic containers. Prior to sample collection, each container and cap should be rinsed thoroughly with sample water.

Processing--Nitrate-nitrite samples should be analyzed immediately after collection. If a delay occurs, samples can be stored for up to 24 h by acidification to pH<2 with sulfuric acid and held at 4° C. Samples must not be preserved using mercuric chloride because the mercuric ion accelerates the degradation of the cadmium-reduction column (APHA 1985).

Laboratory Procedures--

Analytical Procedures--Approved test procedures for the analysis of nitrate-nitrite in saline waters include U.S. EPA Methods 353.2 and 353.3 and APHA Methods 418C and 418F. The methods should be consulted to determine which is most appropriate for available equipment, expected concentrations, and desired levels of precision and accuracy.

Calibration and Preventive Maintenance--Calibration procedures should follow those specified in the method. Efficiency of each reduction column should be checked by comparing a nitrite standard to a reduced nitrate standard at the same concentration. This efficiency check should be made at the beginning and the end of each sample run and at a minimum frequency of every 10 samples. Reactivate the copper-cadmium granules when reduction falls below 75 percent.

Concentrations of the calibration standards should bracket the sample concentrations. If a sample concentration is outside the range of calibration, then an additional calibration standard should be analyzed to check if

the result is within the linear range of the method. Alternatively, the sample should be diluted to within the calibration range and reanalyzed.

Quality Control Checks--Duplicate analyses should be conducted on a minimum of 5 percent of the total number of samples, with an additional 5 percent of the samples spiked and analyzed for percent recovery. A blank that has been run through the reduction column should be analyzed with each batch of samples or every 20 samples. A U.S. EPA performance sample should be analyzed a least once per quarter.

Corrective Action--Various components of the effluent can interfere with the analysis. The method should be reviewed for ways to remove possible interferences prior to analysis. Possible intereferences include suspended solids, residual chlorine, oil and grease, and high concentrations of iron, copper, or other metals.

The area where nitrate-nitrite analyses are performed should be well isolated from exposure to nitric acid or nitric acid fumes.

Data Quality and Reporting--The detection and accurate quantification of nitrate-nitrite in receiving water are routinely attainable, although method detection limits can vary because of methods or instrumentation. The analytical method should be consulted to determine expected detection limits, precision, and accuracy. Data should be reported in mg/L as N to a maximum of three significant figures. Results of all determinations should be reported, including QA replicates, blanks, and spiked samples. Any factors that may have influenced sample quality should also be reported.

Phosphorus (Total)

Field Procedures--

Collection--Phosphorus samples may be collected in glass or plastic containers. Containers should be rinsed with 1N HCl followed by several rinses with distilled water. Detergents containing phosphate should never be used on containers or labware that is to be used for phosphate analysis. Sample containers and lids should be rinsed thoroughly with sample water before sample collection.

Processing--Phosphorus samples can be stored up to 28 days before analysis by acidification to pH<2 with sulfuric acid and refrigeration at 4° C. Samples with low concentrations of phosphorus should not be stored in plastic containers, as phosphates may adsorb onto the container walls.

Laboratory Procedures--

Analytical Procedures--Approved test procedures for the analysis of total phosphorus in receiving water are U.S. EPA Methods 365.1, 365.2, and 365.3 and APHA Methods 424C, 424F, and 424G. The methods should be consulted to determine which is most appropriate for available equipment, expected concentrations, and desired levels of precision and accuracy.

Calibration and Preventive Maintenance--Calibration procedures should follow those specified in the method. Concentrations of the calibration standards should bracket the sample concentration. If a sample concentration is outside the range of calibration, then an additional calibration standard should be analyzed to check if the result is within the linear range of the method. Alternatively, the sample should be diluted to within the calibration range and reanalyzed.

Quality Control Checks--Duplicate analyses should be conducted on a minimum of 5 percent of the total number of samples, with an additional

5 percent of the samples spiked and analyzed for percent recovery. A blank should be analyzed with each batch of samples. A U.S. EPA performance sample should be analyzed at least once per quarter.

Corrective Action--Because phosphorus contamination can occur from a variety of sources, it is recommended that a clearly marked set of labware be dedicated to only phosphorus analysis. This labware should never be exposed to phosphorus detergents or reagents containing phosphate.

Various components of the effluent can interfere with the analysis. The method should be reviewed for ways to remove interferences or adjust for interferences from components that cannot be removed. Silica and arsenic are possible positive interferences, while hexavalent chromium and nitrite can cause low recovery.

For highly colored or turbid samples, additional sample preparation (e.g., further oxidation or filtration) may be required prior to color development. In any case, blanks should be prepared by adding all the reagents except the coloring reagents to the sample. Measure absorbance in the sample blank at the wavelength used for the phosphorus determination and subtract this absorbance value from the sample absorbance prior to calculation of phosphorus concentration.

Data Quality and Reporting--Detection and accurate quantification of total phosphorus in receiving water is routinely attainable. Actual method detection limits can vary because of methods or instrumentation. The analytical method should be consulted to determine expected detection limits, precision, and accuracy. Data should be reported in mg/L as P to a maximum of three significant figures. Results of all determinations should be reported, including QA replicates and spiked samples. Any factors that may have influenced sample quality should also be reported.

Total and Fecal Coliform Bacteria

Field Procedures--

Collection--Samples should be collected in clean, sterile polypropylene or glass containers. The sample containers must be resistant to sterilizing conditions and to the solvent action of water. The container lids must not produce bacteriostatic or nutritive compounds upon sterilization. The sample containers must seal tightly. Containers with chips, cracks, or etched marks should be discarded.

Heat-resistant glass or plastic sample containers should be autoclaved at 121° C for 15 min. Alternatively, dry glass containers can be sterilized in a hot-air oven at 170° C for at least 2 h. For plastic containers that are not heat-resistant, ethylene oxide gas sterilization is acceptable (Bordner et al. 1978). Containers sterilized by gas should be stored at least 12 h before use to ensure all gas has dissipated.

If the sample water has residual chlorine, sodium thiosulfate should be added (to a concentration of 0.008 percent) to neutralize the chlorine and thereby prevent continued bactericidal action after sample collection. In this manner, the true microbial content of the water at the time of sampling can be estimated more accurately. If sodium thiosulfate must be added to a sample, it should be added to the sample container prior to sterilization.

If the sample water contains heavy metals in concentrations exceeding 0.01 mg/L, a chelating agent should be added to the sample container to reduce metal toxicity. This is particularly important if samples are not analyzed within 4 h after collection. APHA (1985) recommends using the disodium salt of ethylenediaminetetracetic acid (EDTA), adjusted to pH 6.5, and added to the sample container before sterilization. For a 120-mL container, addition of 0.3 mL of a 15-percent EDTA solution is considered adequate (APHA 1985).

It is critical that samples are not contaminated during the collection process. To avoid contamination, sterilized containers should be kept sealed until they are used, containers should be filled without rinsing, and container lids should be replaced immediately after the samples have been collected. When removed from containers, lids should be held face down in one hand and not set down on any surface. Adequate headspace (at least 2.5 cm) should be left in each sample container to facilitate mixing prior to analysis.

Processing--Samples should be analyzed as soon as possible after collection. If a delay occurs, samples should be held at 4° C for a maximum of 6 h. The length of delay should be noted on the log sheet.

Laboratory Procedures--

Analytical Methods--Details of the membrane filter (MF) method and the most probable number (MPN) method are presented in Part III of Bordner et al. (1978) and in Parts 908 and 909 of APHA (1985). Although the MF method is more precise than the MPN method, it is also more sensitive to interference from turbidity in samples. Because the MF technique usually yields low and variable recovery from chlorinated waters, the MPN technique should be used when samples contain chlorine residual.

Calibration and Preventive Maintenance--This information is reviewed extensively in Part IV of Bordner et al. (1978) and in Part 902 of APHA (1985).

Quality Control Checks--Quality control checks for total and fecal coliform bacteria analyses are listed in detail in Part IV of Bordner et al. (1978) and in Part 902 of APHA (1985). The list includes:

- Sterility checks on media, dilution and rinse water, glassware, and membrane filters

- Duplicate analyses on 10 percent of samples and on at least one sample per test run

- Colony verifications on a monthly basis.

Corrective Action--Procedures detailed in the relevant sections of Bordner et al. (1978) and APHA (1985) should be followed.

Data Quality and Reporting--Table 909:II of APHA (1985) presents 95-percent confidence limits for the MF method for coliform colonies of 1, 2, 3, 4, 5 and 10. The precision of the MPN method increases with increasing number of replicates. With five tubes, each with 1 mL of sample, a completely negative result is expected less than 1 percent of the time (APHA 1985). Confidence limits (95 percent) for various MPN counts are given in Tables 908:III, 908:IV, and 908:V of APHA (1985).

Using the MF method, data should be reported as densities of coliforms per 100 mL. Using the MPN method, data should be reported as MPN values per 100 mL. Results of all determinations should be reported, including QA replicates, sterility checks, and colony verifications. Any factors that may have influenced sample quality should also be reported.

Enterococcus Bacteria

Field Procedures--

Collection--Samples should be collected in clean, sterile polypropylene or glass containers. The sample containers must be resistant to sterilizing conditions and to the solvent action of water. The container lids must not produce bacteriostatic or nutritive compounds upon sterilization. The sample containers must seal tightly. Containers with chips, cracks, or etched marks should be discarded.

Heat-resistant glass or plastic sample containers should be autoclaved at 121° C for 15 min. Alternatively, dry glass containers can be sterilized in a hot-air oven at 170° C for at least 2 h. For plastic containers that are not heat-resistant, ethylene oxide gas sterilization is acceptable (Bordner et al. 1978). Containers sterilized by gas should be stored at least 12 h before use to ensure all gas has dissipated.

If the sample water has residual chlorine, sodium thiosulfate should be added to neutralize the chlorine and thereby prevent continued bactericidal action after sample collection. In this manner, the true microbial content of the water at the time of sampling can be estimated more accurately. If sodium thiosulfate must be added to a sample, it should be added to the sample container prior to sterilization so that the final concentration in the sample will be 100 mg/L. For a 120-mL container, 0.1 mL of a 10-percent solution of sodium thiosulfate will neutralize a sample containing as much as 15 mg/L of residual chlorine (APHA 1985).

If the sample water contains heavy metals in concentrations exceeding 0.01 mg/L, a chelating agent should be added to the sample container to reduce metal toxicity. This is particularly important if samples are not analyzed within 4 h after collection. APHA (1985) recommends using the disodium salt of ethylenediaminetetracetic acid (EDTA), adjusted to pH

6.5, and added to the sample container before sterilization. For a 120-mL container, addition of 0.3 mL of a 15-percent EDTA solution is considered adequate (APHA 1985).

It is critical that samples are not contaminated during the collection process. To avoid contamination, sterilized containers should be kept sealed until they are used, containers should be filled without rinsing, and container lids should be replaced immediately after the samples have been collected. When removed from containers, lids should be held face down in one hand and not set down on any surface. Adequate headspace (at least 2.5 cm) should be left in each sample container to facilitate mixing prior to analysis.

Processing--Samples should be analyzed as soon as possible after collection. If a delay occurs, samples should be held at 4° C for a maximum of 6 h. The length of delay should be noted on the log sheet.

Laboratory Procedures--

Analytical Methods--Methods for analyzing enterococcus bacteria are currently being finalized by U.S. EPA.

Calibration and Preventive Maintenance--This information is reviewed extensively in Part IV of Bordner et al. (1978) and in Part 902 of APHA (1985).

Quality Control Checks--Quality control checks for these analyses are listed in detail in Part IV of Bordner et al. (1978) and in Part 902 of APHA (1985). The list includes:

- Sterility checks on media, dilution and rinse water, glassware, and membrane filters

- Duplicate analyses on 10 percent of samples and on at least one sample per test run

- Colony verifications on a monthly basis.

Corrective Action--Procedures detailed in the relevant sections of Bordner et al. (1978) and APHA (1985) should be followed.

Data Quality and Reporting--Data should be reported according to the specifications currently being finalized by U.S. EPA.

Chlorophyll a

Field Procedures--

Collection--Chlorophyll a samples can be collected in glass or plastic containers. Because acids will decompose chlorophyll a to phaeophyton, it is critical that the water sampler and sample containers remain free of acids (including acids from fingerprints). In addition, sample containers should be rinsed three times before sample collection.

Processing--Chlorophyll a samples should be filtered immediately after collection. Two or three drops of magnesium chloride suspension should be added to the sample before filtration to prevent the sample from becoming acidic. Filters can be stored for a few weeks by holding them in the dark in a desiccator at -20° C (Strickland and Parsons 1972). However, storage usually leads to low results and makes the extraction of chlorophyll more difficult. It is therefore recommended that filters be extracted immediately after filtration. If filters are stored, the length of delay until analysis should be recorded on the log sheet.

Laboratory Procedures--

Analytical Procedures--Chlorphyll a determinations using the fluorometric method are described in detail in Section IV.3.IV of Strickland and Parsons (1972) and as Method 1002G2 of APHA (1985). All work with chlorophyll extracts should be conducted in subdued light to avoid degradation. Opaque containers or containers wrapped in aluminum should be used to protect samples from light. Glass fiber filters are recommended because they are inexpensive and result in practically no blank (Strickland and Parsons 1972). To improve extraction efficiency, a cell-grinding step should be included prior to extraction. A TFE/glass grinder should be used for glass fiber filters.

Calibration and Preventive Maintenance--The fluorometer should be calibrated spectrophotometrically using samples from the same standard chlorophyll solution. This solution should have a known concentration of chlorophyll a that was extracted from marine phytoplankton. Strickland and Parsons (1972) recommend that a mixed culture of equal amounts (by pigment) of *Skeletonema costatum*, *Coccolithus huxleyii*, and *Peridinium trochoidium* be used as the sources of chlorophyll. If natural phytoplankton populations are used, phaeo-pigments may be present.

A series of dilutions of the standard chlorophyll solution should be made so that concentrations of 2, 6, 20, and 60 ug/L are achieved. Readings of each dilution should be made at sensitivity settings of 1x, 3x, 10x, and 30x. This will allow derivation of calibration factors to convert fluorometric readings in each sensitivity level to chlorophyll a concentrations (for details, see APHA 1985).

Quality Control Checks--To correct for scatter, the fluorometer should be zeroed against a cuvette of 90-percent acetone for each level of sensitivity. Duplicate analyses should be conducted on at least 10 percent of the total number of samples.

Corrective Action--If the fluorometer does not appear to be functioning properly, the manufacturer's troubleshooting guide should be consulted. Scratched or etched cuvettes should be replaced.

Data Quality and Reporting--It is recommended that chlorophyll a concentrations be determined using the fluorometric method rather than the spectrophotometric method, because the former technique is more sensitive, requires less sample, and can be used for *in vivo* measurements (APHA 1985). Precision of the recommended method varies as a function of the amount of pigment being measured. For chlorophyll a concentrations exceeding 0.5 mg/m^3, a precision of ± 8 percent is possible. The sensitivity of detection has been estimated as 0.01 mg/m^3 for a 2-L sample (Strickland and Parsons 1972). Chlorophyll a concentrations should be reported as mg/m^3 to the nearest

0.01 unit. Results of all determinations should be reported, including QA replicates. Any factors that may have influenced sample quality should also be reported.

Phytoplankton

Field Procedures--

Pre-Collection Preparation--A solution of 100-percent buffered formalin should be prepared by adding 2 g of sodium borate per 98 mL of undiluted formalin. Sample jars should have a capacity of approximately 1 L and should have lined plastic or polyethylene lids. Each jar should be marked at the point where it is 90 percent full.

Collection--When the sampler is retrieved, it should be shaken to disperse the organisms. (Note: swirling is not effective for dispersing plankton.) Each sample should then be drained into a marked 32-oz jar until the water level reaches the 90-percent full mark.

Processing--Because preservation renders many phytoplankton forms taxonomically intractable and indistinguishable from detritus, it is highly desirable to analyze live material (Stofan and Grant 1978). Unfortunately, this is not practical for most routine monitoring programs. Hence, procedural recommendations given herein address preserved samples.

It is recommended that formalin be used to fix the phytoplankton samples. However, other fixatives are available if formalin proves unsatisfactory (see Stofan and Grant 1978). Once a fixative is selected, it should be used exclusively so as not to bias the data.

After each sample has been collected, the jar should be filled to the top with 100-percent buffered formalin and the cap should be screwed on tightly. The sample jar should then be inverted several times to mix the contents.

Samples should be stored upright in an opaque box to minimize exposure to sunlight and in a cool area to minimize exposure to high temperatures. Samples should also be stored in a stable part of the ship to minimize

agitation. If special racks are not available to keep the shipping boxes from moving, they should be lashed down.

Laboratory Procedures--

Analytical Procedures--As with most biological field samples, handling is detrimental to specimen quality, and hence, data quality. Handling should therefore be kept to a minimum.

Several methods of specimen identification and enumeration may be used (Stofan and Grant 1978). The most common is the Utermohl method, by which phytoplankters are identified using an inverted microscope and a fixed, settled sample. Contents of the sample jar are first resuspended by gently shaking in an up-and-down motion. An aliquot is then poured into a graduated vertical counting chamber and allowed to settle. Phytoplankters are then identified as they rest on the bottom of the chamber. Scanning electron microscopy and Nomarski illumination for light microscopy can be used to aid taxonomic identifications.

If possible, phytoplankters should be identified and enumerated from an unconcentrated sample. This is highly desirable because sample handling is minimized. However, in nutrient-poor waters the phytoplankton community may be sparsely distributed, necessitating sample concentration. Several concentrating procedures are commonly used (see Stofan and Grant 1978). If sample concentration is necessary, tests should be conducted to see which method is the least harmful to the specimens. The selected method should then be evaluated for efficiency by comparing it with replicate aliquots of unconcentrated samples. After being accepted, the method should be the only one used for concentrating samples. Data generated from concentrated samples should always be evaluated in light of the results of the efficiency tests recommended above.

All phytoplankers should be identified to the species level and enumerated, and the data should be recorded on a log sheet. After the identifications

have been completed and the data have been recorded, each sample aliquot that was examined should be archived. Each aliquot should be stored in a separate vial that is labeled internally with the following information: survey area; station number; replicate number (if any); latitude and longitude, Loran C, or other positioning information; date of collection; and collection depth. Each vial should be sealed tightly with a polyseal cap, and all vials from the same sample should be stored in a common container filled with preservative. To prevent evaporation of the fixative, vial and container lids can be sealed with plastic tape. Although preserving and archiving the sample aliquots is recommended for reference and verification purposes, it should be remembered that many of the organisms will deteriorate over time because of the caustic properties of the fixative.

Calibration and Preventive Maintenance--The inverted microscope should be serviced annually unless the manufacturer recommends otherwise.

Taxonomic identifications should be consistent within the given laboratory, and with the identifications of other workers. To that end, at least three individuals of each taxon should be sent for verification to recognized experts in museums and/or academic institutions. The verified specimens should then be photographed, and the photographs should be placed in the permanent reference museum. Continued collection of a verified species does not require additional expert verification. Participation of the laboratory staff in a regional taxonomic standardization program (if available) is required to ensure regional consistency and accuracy of identifications. The photographic reference collection should be started and completed as early as possible during the project.

Photographs of phytoplankton taxa are recommended because of the difficulties involved in preserving phytoplankton specimens. The photographs should be recorded on 35-mm color slide film using a high-quality photomicroscopy apparatus. Each slide should be coded, and an accessory logbook of information should be maintained. The logbook should contain the following information: survey name; station number; replicate number (if any); latitude

and longitude, Loran C, or other positioning information; date of collection; kind of sampler; and name of collector. In addition, the name of the taxonomic expert who verified the identification, institutional affiliation, and the date of verification should be recorded.

A computer listing of each species' name, the person who verified the identification, date of verification, location of the photograph in the collection, status of the photograph if it has been loaned to outside experts, and references to pertinent literature should be maintained by the laboratory performing identifications for the monitoring program. This listing should be available near the collection. Reference photographs are invaluable, and should be retained at the location where the identifications were performed, in the offices of the funding agencies, or at a museum with long-term storage capabilities. In no instance should this portion of the collection be destroyed. A single person should be identified as the curator of the collection and be responsible for its integrity.

Quality Control Checks--"New" taxonomists should have all of their identified organisms verified within the laboratory, until their accuracy reaches 95 percent. Thereafter, all identifications in one of every 10 samples should be checked for accuracy.

The most recent taxonomic literature should be used whenever possible. Citations for all taxonomic references should be appended to the data report for each survey.

Corrective Action-- If a sample is found in which one or more species are misidentified, all previous unchecked samples should be examined for those specific errors. Errors should be rectified when located.

Data Quality and Reporting Requirements--All phytoplankton should be identified to the lowest possible taxon, preferably to the species level. In cases where the identity of a species is uncertain, a species number may be used (e.g., *Chaetoceros* sp. 1). Data for each sample should be

reported as number of individuals per liter for each species. Results of all determinations should be reported, including taxonomic verifications. Any factors that may have influenced sample quality should also be reported.

SEDIMENT/INFAUNAL ANALYSES

QA/QC procedures are presented in this section for the following 11 sediment/infauna variables:

- Grain size
- Total solids/water content
- Total volatile solids
- Total organic carbon
- Biochemical oxygen demand
- Chemical oxygen demand
- Oil and grease
- Sulfides
- Priority pollutant metals
- Priority pollutant organic compounds
- Infauna.

Samples to be analyzed for these variables generally will be collected using a bottom grab. Operation of a bottom grab is discussed earlier in the general methods section.

Grain Size

Field Procedures--

Collection--Grain size samples can be collected in glass or plastic containers.

Processing--Grain size samples should be stored in a refrigerator at 4° C to minimize the effects of bacterial growth. They may be held for up to 6 mo in this manner. Samples must not be frozen or dried prior to analysis, as either of these processes may change the particle-size distribution.

Laboratory Procedures--

Analytical Procedures--Grain size should be measured according to the sieving and pipet procedures described in Plumb (1981). A wet sample is first sorted into coarse and fine fractions by wet sieving through a 63-um (i.e., 4-phi) sieve. Particles having a diameter greater than 63 um (i.e., sand and gravel) are sorted by dry sieving through a graded series of screens. Particles having a diameter less than 63 um (i.e., silt and clay) are sorted by their different settling velocities during the pipet analysis.

An aliquot of the wet-sediment sample should be analyzed for total solids to estimate the dry weight of the aliquot used for grain size analysis. This estimated weight can be compared with the summed weight of all fractional determinations to evaluate the efficiency of the method.

It is critical that each sample be thoroughly homogenized in the laboratory before aliquots are removed. Laboratory homogenization should be conducted even if samples were homogenized in the field.

If organic matter is oxidized prior to size analysis, the true particle size will be determined. If organic matter is not oxidized prior to analysis, the apparent particle size will be determined. Because results from these two techniques can differ, one method should be selected and used for all grain-size determinations.

At a minimum, it is recommended that each sample be analyzed for percent gravel, sand, silt, and clay. However, if the fine-grained fraction comprises less than 1 percent of the total sample weight, the pipet analysis is not recommended and the weight of the combined silt-clay fractions should be reported. In very sandy sediments, the sand fraction may be subdivided further. If this is desired, it is recommended that the fraction be sieved at 1-phi increments to yield five subfractions.

Calibration and Preventive Maintenance--The analytical balance, drying oven, sieve shaker, and temperature bath should be inspected each time they are used, and calibrated weekly at a minimum. The manufacturer's instructions should be consulted for calibration of the analytical balance and for preventive maintenance procedures for the analytical balance, drying oven, sieve shaker, and temperature bath. It is recommended that a calibrated dial thermometer be used in the drying oven to determine average temperature.

Quality Control Checks--Several procedures are critical to the collection of high quality particle size data. Most important to the dry sieve analysis is that the screens are clean before conducting the analysis, and that all of the sample is retrieved from them. To clean a screen, it should be inverted and tapped on a table, while making sure that the rim hits the table evenly. Further cleaning of brass screens may be performed by gentle scrubbing with a stiff bristle nylon brush. Stainless steel screens may be cleaned with a nylon or brass brush.

The most critical aspect of the pipet analysis is knowledge of the temperature of the silt-clay suspension. An increase of only 1° C will increase the settling velocity of a particle 50 um in diameter by 2.3 percent.

It is generally recommended that the pipet analysis be conducted at a constant temperature of 20° C. However, Plumb (1981) provides a table to correct for settling velocities at other temperatures. Thorough mixing of the silt-clay suspension at the beginning of the analysis is also critical. A perforated, plexiglass disc plunger is very effective for this purpose.

Replicate sieve and pipet analyses should be conducted on at least 10 percent of the total number of samples analyzed. If >20 samples are sorted, it is recommended that at least one triplicate analysis be performed.

Corrective Action--An analysis should be repeated if weighing errors exceed 5 percent of the original sample weight. If the mass of sediment used for pipet analysis exceeds 25 g (0.9 oz), a subsample should be used as described by Plumb (1981). Silt-clay samples in excess of 25 g (0.9 oz) may give erroneous results because of electrostatic interactions between the particles. Silt-clay samples less than 5 g yield a large experimental error in weighing relative to the total sample weight. Other reasons for erroneous results include hindered settling and flocculation.

Data Quality and Reporting--Ideally, the summed weight of all sample fractions should differ from the original sample weight by less than 1 percent (Plumb 1981). Weights of the six gravel/sand fractions, the total silt fraction, and the total clay fraction should be reported to the nearest 0.0001 g. See Shepard (1963) for size ranges of the textural classes. Results of all determinations should be reported, including QA replicates. Any factors that may have influenced sample quality should also be reported.

Total Solids/Water Content

Field Procedures--

Collection--Samples can be collected in glass or plastic containers.

Processing--Samples should be stored frozen and can be held for up to 6 mo in that condition.

Laboratory Procedures--

Analytical Procedures--Total solids should be determined using the procedure described in Plumb (1981). The general procedure is to weigh a wet sample, dry it at 103-105° C, reweigh the sample, and determine the percentage of wet weight accounted for by the dry weight. Unrepresentative material should be removed from the sample prior to analysis and noted on the laboratory log sheet.

Because total solids content is operationally defined by the drying temperature, it is essential that this temperature be held constant at the specified value. It is also critical that each sample be thoroughly homogenized in the laboratory before a subsample is taken for analysis. Laboratory homogenization should be conducted even if samples were homogenized in the field. Ignition of the evaporating dish prior to analysis is critical to ensuring that the container is free from contaminants.

Calibration and Preventive Maintenance--The analytical balance, drying over, and muffle furnace should be inspected and calibrated weekly, at a minimum.

Quality Control Checks--Duplicate analysis should be conducted on at least 10 percent of the total number of samples.

Corrective Action--None applicable.

Data Quality and Reporting--Total solids content or, alternatively, water content should be reported as a percentage of the wet weight of the sediment sample to the nearest 0.1 unit. Results of all determinations should be reported, including QA replicates. Any factors that may have influenced sample quality should also be reported.

Total Volatile Solids (TVS)

Field Procedures--

Collection--Samples can be collected in glass or plastic containers.

Processing--Samples can be stored frozen and can be held for up to 6 mo in that condition.

Laboratory Procedures--

Analytical Procedures--Methods for volatile solids analysis are given by Plumb (1981). The basic procedure is to dry a sediment sample at 103-105° C, weigh it, and then combust it at 550° C. The difference in mass between the combusted sample and the desiccated sample estimates the mass of volatile organic matter. Unrepresentative material should be removed from the sample prior to analysis and noted on the laboratory log sheet.

Because total volatile solids is operationally defined by the drying and ignition temperature, it is essential that these temperatures be held constant at their specified levels. It is also critical that each sample be thoroughly homogenized in the laboratory before a subsample is taken for analysis. Laboratory homogenization should be conducted even if samples were homogenized in the field. Evaporating dishes (or crucibles) must be ignited at 550° C before being used for total volatile solids analysis. This step ensures that the dishes are free from volatile contaminants. Dried and combusted samples should be cooled in a desiccator and held there until they are weighed. If a desiccator is not used, the sediment will accumulate ambient moisture and the sample weight will be overestimated. A color-indicating desiccant is recommended so that spent desiccant can be detected easily. Also, the seal on the desiccator should be checked periodically and, if necessary, the ground glass rims should be greased or the "O" rings should be replaced.

Calibration and Preventive Maintenance--The analytical balance, drying oven, and muffle furnace should be inspected and calibrated weekly, at a minimum. The muffle furnace thermocouples and thermometers should be inspected before each use and calibrated as needed.

Quality Control Checks--Duplicate analyses should be conducted on at least 10 percent of the total number of samples.

Corrective Action--None applicable.

Data Quality and Reporting--Total volatile solids content should be reported as a percentage of the dry weight of the uncombusted sediment sample to the nearest 0.1 percent. Results should be reported for all determinations, including QA replicates. Any factors that may have influenced sample quality should also be reported.

Total Organic Carbon (TOC)

Field Procedures--

Collection--Samples can be collected in glass or plastic containers.

Processing--Samples should be stored frozen and can be held for up to 6 mo in that condition. Excessive temperatures should not be used to thaw samples.

Laboratory Procedures--

Analytical Procedures--The method for total organic carbon analysis is given by Plumb (1981). The recommended procedure is to first acidify the samples to remove inorganic carbon, and then convert all organic carbon compounds to carbon dioxide by catalytic combustion.

Because inorganic carbon (e.g., carbonates, bicarbonates, free CO_2) will interfere with total organic carbon determinations, samples must be treated to remove inorganic carbon before being analyzed. Samples may be combusted in one of several different models of induction furnace. All combustions should be performed in a single furnace (even if two furnaces are the same model), as different furnaces may give slightly different results. It is also critical that each sample be thoroughly homogenized in the laboratory before a subsample is taken for analysis. Laboratory homogenization should be conducted even if samples were homogenized in the field. Dried samples should be cooled in a desiccator and held there until they are weighed. If a desiccator is not used, the sediment will accumulate ambient moisture and the sample weight will be overestimated. A color-indicating desiccant is recommended so that spent desiccant can be detected eaily. Also, the seal on the desiccator should be checked periodically and, if necessary, the ground glass rims should be greased or the "O" rings should be replaced.

Calibration and Preventive Maintenance--The induction furnace used for the total organic carbon analyses should be inspected and calibrated daily. The analytical balance and drying oven should be inspected and calibrated weekly, at a minimum.

Quality Control Checks--Duplicate analyses should be conducted on at least 10 percent of the total number of samples. An NBS traceable standard reference material should be analyzed daily to monitor performance. A method blank should be analyzed with each batch of samples.

Corrective Action--If the induction furnace does not appear to be operating properly, follow the manufacturer's instructions for troubleshooting and repair.

Data Quality and Reporting--Total organic carbon should be reported as a percentage of the dry weight of the unacidified sediment sample to the nearest 0.1 unit. Results should be reported for all determinations, including QA replicates. Any factors that may have influenced sample quality should also be reported.

Biochemical Oxygen Demand (BOD)

Field Procedures--

Collection--Samples can be collected in glass or plastic containers.

Processing--BOD samples should be analyzed immediately after collection. If a delay occurs, samples should be stored at 4° C, and can be held for up to 7 days in that condition. Samples should be kept field moist and air contact should be prevented to minimize oxidation. Refrigerated samples should be warmed to 20° C prior to analysis.

Laboratory Procedures--

Analytical Methods--BOD should be determined using the method described by Plumb (1981). This procedure is similar to U.S. EPA Method 405.1 and APHA Method 507 for water and waste water and specifies an incubation period of 5 days at 20° C.

It is critical that each sample be thoroughly homogenized in the laboratory before a subsample is taken for analysis. Laboratory homogenization should be conducted even if samples were homogenized in the field. A subsample should be analyzed separately for total solids so that BOD can be determined on a dry-weight basis. The bacterial seed should be from a source having a salinity similar to that of the environment from which the samples were taken. The salinity of the dilution water should be adjusted with sea salt (if necessary) so that its salinity approximates that of the environment from which the sample was taken. Many synthetic organic components in sediments are not biodegradable without the seeding procedure because of either a toxic effect or a deficiency or absence of appropriate microorganisms. Chlorine residuals must be removed prior to the test because residual chlorine may be toxic to the microbial population or may oxidize organic material. Because sediments that contain sulfide, sulfite, or ferrous ions create an immediate demand on the dissolved oxygen, it is necessary to distinguish

this immediate demand from the true BOD. The depletion of dissolved oxygen during 15 min in a standard water dilution of the sample was arbitrarily selected by Plumb (1981) as the initial oxygen demand.

Calibration and Preventive Maintenance--Dissolved oxygen measurements should be calibrated according to the procedures recommended in the appropriate sections of this document.

Quality Control Checks--Duplicate analyses should be conducted on a minimum of 10 percent of the total number of samples. A dilution water blank and a glucose-glutamic acid standard provide quality control on the dilution water as well as on the cleanliness of analytical equipment (e.g., incubation bottles) and should each be analyzed in triplicate with each batch of samples. The most reliable BOD determinations are made when residual dissolved oxygen is at least 2 mg/L and uptake of dissolved oxygen is at least 2 mg/L after incubation (Plumb 1981).

Corrective Action--Plumb (1981) and APHA (1985) should be consulted for methods of correcting for the many kinds of interference that may accompany BOD analyses.

If the dilution water blanks exceed 0.2 mg/L, cleanliness of containers and water should be checked. Containers may require 1+1 HCl rinse after detergent washing to remove and any residual organic material. Any containers rinsed with acid should be thoroughly rinsed with distilled water to prevent acid carryover.

If a 2-percent dilution of the glucose-glutamic acid standard check solution is outside the range of 218±11 mg/L, BOD determinations made with the seed and dilution water are suspect. Several methods used to determine the problem include running a series of dilution water blanks using different water sources with and without seed, preparing a fresh solution of glucose-glutamic acid, changing the seed, or preparing fresh reagents for the dilution

water. The source of the problem should be determined before additional BOD analyses are performed.

Data Quality and Reporting--BOD should be reported as mg/kg dry weight of sediment to the nearest 0.1 unit. The laboratory should report the results of all determinations, including QA replicates, dilution water blanks, and glucose-glutamic acid standards. Any factors that may have influenced sample quality should also be reported.

Chemical Oxygen Demand (COD)

Field Procedures--

Collection--Samples can be collected in glass or plastic containers.

Processing--COD samples should be analyzed immediately after collection. If a delay occurs, samples should be stored at 4° C, and can be held for up to 7 days in that condition. Samples must be kept field moist and free from air contact during storage to minimize oxidation.

Laboratory Procedures--

Analytical Methods--COD should be determined according to the method described in Plumb (1981). This open reflux method is similar to U.S. EPA Method 410.1 and APHA Method 508A for water and waste water and consists of oxidizing the organic matter in a reflux apparatus for 2 h.

It is critical that each sample be thoroughly homogenized in the laboratory before a subsample is taken for analysis. Laboratory homogenization should be conducted even if samples were homogenized in the field. A subsample should be analyzed separately for total solids so that COD can be determined on a dry-weight basis.

Because traces of organic material from external sources may cause a positive error, care should be taken to avoid contamination of glassware and the distilled water used to prepare reagents and to reflux the sample. Because volatile materials may be lost when the sample temperature rises during the sulfuric acid addition step, the flask should be cooled during this addition to minimize this loss. Because chlorides are quantitatively oxidized by dichromate and represent a positive interference, mercuric sulfate is added to the digestion flask to complex the chlorides.

Calibration and Preventive Maintenance--The technique and quality of reagents should be evaluated by conducting the test on a standard potassium hydrogen phthalate solution. Laboratory glassware should be kept very clean to prevent introduction of organic material to the sample.

Quality Control Checks--Duplicate analyses should be conducted on a minimum of 10 percent of the total number of samples. A method blank and a potassium hydrogen phthalate standard should be analyzed with each batch of samples.

Corrective Action--If results of the analysis conducted on the potassium hydrogen phthalate standard indicate that the technique is not performing properly, check glassware and the distilled water for contamination, ensure that reagents and sample are thoroughly mixed, ensure that excess potassium dichromate remains after oxidation is complete, and critically review all other analytical steps.

Data Quality and Reporting--COD should be reported as mg/kg dry weight of sediment to the nearest 0.1 unit. The laboratory should report the results of all determinations, including QA replicates, method blanks, and potassium hydrogen phthalate standards. Any factors that may have influenced sample quality should also be reported.

Oil and Grease

Field Procedures--

Collection--Sediment samples should be collected in wide-mouth glass jars. Bottles should first be washed with a warm aqueous detergent mixture, and then, in sequence, thoroughly rinsed with hot tap water, rinsed at least twice with distilled water, rinsed with 1,1,2-trichloro-1,2,2-trifluoroethane (i.e. Freon or equivalent), and dried in a clean oven at $\geq$ 105° C for 30 min. Bottle lids should be lined with TFE. Aluminum-lined lids can be used, but contact with seawater corrodes the aluminum. Plastic containers are not acceptable. Headspace should be left in the sample container for addition of acid and mixing or expansion during freezing.

Processing--When analysis cannot be made within 24 h, preserve the sample with approximately 1 mL of concentrated hydrochloric acid per 80 g (wet weight) of sample. Never preserve with chloroform or sodium benzoate (APHA 1985). Acid-preserved samples should be stored at 4° C, and can be held for up to 28 days in that condition. Although U.S. EPA has not established a recommended maximum holding time for oil and grease in sediments, 28 days is consistent with the recommended holding time for acid-preserved water samples. Samples can also be preserved by freezing at -20° C, and can be held under that condition for up to 6 mo. Samples must be kept field moist during storage because they may lose apparent oil and grease as a result of drying.

A wet sample should be used for analysis because a dried sample may yield low results. Concentration on a dry-weight basis can be obtained by analyzing a separate aliquot for total solids.

Laboratory Procedures--

Analytical Procedures--Methods for oil and grease analysis are described in Plumb (1981). Soxhlet extraction of the sediment can be inefficient

due to channeling of solvent through the sediment layer. Therefore, all sediments should be stirred at least twice during the extraction period. Because asphaltic materials are insoluble in freon, the recommended method will give low recoveries for samples containing these materials.

Determination of extracted oil and grease concentrations by the gravimetric method is reliable for relatively nonvolatile hydrocarbons, vegetable oils, animal fats, waxes, and soaps. Elemental sulfur is co-extracted with oil and grease and will interfere with gravimetric determinations. Light hydrocarbons that volatilize at temperatures below 70° C (e.g., gasoline through No. 2 fuel oil) are lost during the solvent removal step.

Determination of extracted oil and grease concentrations by the infrared method may be more precise at lower concentrations than is the gravimetric method. This method will give higher results than the gravimetric method if the sample contains volatile components, and will give lower results than the gravimetric method if the sample is high in sulfur content. A limitation of the infrared determination is standardization, which requires a prepared reference oil. The reference oil may not be comparable to the type of oil and grease in the samples, thereby resulting in inaccurate results. When the exact nature of the oil and grease in the samples is unknown, the reference oil described in U.S. EPA Method 413.2, Section 6.4 is recommended.

Calibration and Preventive Maintenance--For gravimetric oil and grease analyses, check the accuracy of the analytical balance periodically (minimum of once per week is recommended) using Class S weights. A service contract that includes scheduled preventive maintenance at least once per year is recommended. Scratched, chipped, or cracked boiling flasks should be replaced.

For infrared oil and grease analyses, follow the manufacturer's preventive maintenance procedures for the infrared spectrophotometer. Cells used for analysis should be checked for scratches before each use. Scratched cells should not be used.

Quality Control Checks--Replicate analyses should be performed for a minimum of 10 percent of the total number of samples to establish an estimate of precision. Because spike results may not reflect true extraction efficiencies, reference sample analysis, if available, is more appropriate. A method blank should accompany each batch of samples.

Corrective Action--If concentrations of oil and grease in procedural blanks are greater than the detection limit, check the cleanliness of all glassware. For infrared analyses, severe interferences will result if the freon solvent contacts any material containing plasticizers (e.g, Tygon tubing, plastic bottles). For gravimetric analyses, high results will be obtained if Freon or fumes remain in the flask after distillation.

Poor precision may be caused by channeling of the solvent during extraction. To minimize channeling, ensure that all moisture has been removed with the addition of the magnesium sulfate and stir the sample more frequently during the extraction step.

Data Quality and Reporting--The definition of oil and grease is based on the procedures used. Unless identical procedures are used, oil and grease determinations are not intercomparable. Thus, the method used for analysis should always be specified and consistent within a study.

Reported values for precision and accuracy are indicated below:

- Reproducibility for gravimetric determinations of oil and grease in sludge samples was 4.6-percent coefficient of variation (APHA 1985). Variability in sediment oil and grease determinations have often been reported as high as 20-30 percent (Disalvo et al. 1977).

- Due to the nonspecific nature of the oil and grease analysis, interpretation of spike analyses is difficult. Analysis of a reference material (U.S. EPA Municipal Digested Sludge) has an acceptable recovery range of 50-150 percent of the reference value.

Measurements should be reported to a minimum of two significant figures and should clearly state whether concentrations are on a wet- or dry-weight basis. Detection limits are in the range of 1 mg/kg (wet weight) for infrared determinations and 50 mg/kg (wet weight) for gravimetric determinations. Results of all determinations should be reported, including QA replicates, blanks, and reference samples. Any factors that may have influenced sample quality should also be reported.

Sulfides (Total and Water Soluble)

Field Procedures--

Collection--Samples can be collected in glass or plastic containers. Samples should be removed from the grab sampler as soon as possible to minimize exposure to air.

Processing--Samples should be analyzed for sulfides as soon as possible. Samples for total sulfides should be preserved by adding 2N zinc acetate solution (approximately 5 ml for 30 g of sediment) and swirling the mixture. Preserved samples for total sulfides should be stored in the dark at 4° C and should be analyzed within 7 days. Although U.S. EPA has not established a recommended maximum holding time, 7 days would be consistent with the holding time recommended for acid-preserved water samples. Samples for water-soluble sulfides can be preserved by mixing 10-20 g of sediment in a tared container containing 50 mL of sulfur antioxidant buffer (SAOB). Preserved samples for water-soluble sulfides should be stored in the dark at 4° C and should be analyzed within 4 days. All preserved sulfides samples should be stored in the dark. It is critical that air contact with samples be minimized and that samples be kept moist to minimize oxidation.

Laboratory Procedures--

Analytical Procedures--Total sulfides should be measured according to procedures described in Plumb (1981). A distillation under acidified conditions evolves hydrogen sulfide, which is swept into a zinc acetate trap and precipitated as zinc sulfide. The sulfide is then solubilized and measured using a colorimetric procedure.

Water-soluble sulfides should be measured according to the method described in Green and Schnitker (1974). The buffered sediment must be maintained in a slurry during titration. Although zinc or lead can be used as a titrant, cadmium produces the sharpest endpoint. Because the

SAOB solution will oxidize and darken with time, thereby losing its buffering capacity, this solution should be as fresh as possible. Because samples high in sulfides may exceed the buffering capacity of the SAOB solution, sample size should be adjusted accordingly.

For both sulfides techniques, an aliquot of the original sediment sample should be analyzed for total solids so that results can be expressed on a dry-weight basis.

Calibration and Preventive Maintenance--A series of at least three standard sulfide solutions should be prepared. Because sulfide solutions are very unstable, they should be prepared fresh for each use and used immediately. Stability of these solutions can be increased by using nitrogen-saturated water for dilution. Because of variation among lots, the methylene blue solution should be standardized against a standard sulfide solution. The spectrophotometer used for total sulfides should be calibrated daily by zeroing the instrument using a method blank and establishing a calibration curve using the standard sulfide solutions. The curve should span the expected range of sulfides concentrations. The specific ion probe used for water soluble sulfides should be calibrated according to the manufacturer's instructions.

Quality Control Checks--Duplicate analyses should be conducted on a minimum of 10 percent of the total number of samples.

Corrective Action--The amine-sulfuric acid solution used in the colorimetric determination should be pink initially and turn colorless within 3 min when used in the procedure with a sulfide-free sample. If color appears, prepare a new stock solution with fresh materials.

Data Quality and Reporting--A detection limit of 5-10 mg/kg wet weight can be expected for both sulfides techniques using a 10-20 g wet-weight sample. Sulfides concentrations should be reported as mg/kg of sediment dry weight to the nearest 0.1 unit. Results should be reported for all

determinations, including QA replicates. Any factors that may have influenced sample quality should also be reported.

Priority Pollutant Metals

Field Procedures--

Collection--As with water samples, the best containers for collection of sediment for trace metal analysis are made of quartz or TFE. Because these containers are expensive, the preferred containers are made of polypropylene or linear polyethylene with a polyethylene cap (APHA 1985). Borosilicate glass containers can be used and may be preferred if trace organic compound analyses are to be performed on the same samples. Do not use soft glass containers or containers with aluminum-lined or cardboard-lined lids.

Possible problems during sample collection involve contamination from the sampling device, airborne dust, or cross-contamination from previous samples. Contamination can be minimized by avoiding the use of metal when collecting sediment samples. If metal must be used, corrosive resistant stainless steel is the best material. When using a benthic grab or coring device, contamination can be minimized by removing only sediment that is not touching the walls. Prior to use, sample containers should be thoroughly cleaned with a detergent solution, rinsed with tap water, soaked in acid, and then rinsed with metal-free water. All glass or plastic parts associated with the sampling equipment should be cleaned in the same manner. For quartz, TFE, or glass containers, use 1+1 HNO_3, 1+1 HCl, or aqua regia (3 parts concentrated HCl + 1 part concentrated HNO_3) for soaking. For plastic material, use 1+1 HNO_3 or 1+1 HCl. Reliable soaking conditions are 24 h at 70° C (APHA 1985). Do not use chromic acid for cleaning any materials. For metal parts, clean as stated for glass or plastic, except omit the acid-soak step of the cleaning procedure. Acids used should be at least reagent grade. If trace organic compound analyses are to be performed on the same samples, final rinsing with acetone and then high-purity methylene chloride is acceptable.

A minimum sample size of 5 g (wet weight) is required for the analysis of all priority pollutant metals. To allow for duplicates, spikes, and required reanalyses, a minimum sample size of 50 g (wet weight) is recommended. To allow for mixing of the sample and ease of collection, a 240-mL (8-oz) jar is recommended for collection. A 125-mL (4-oz) jar would be adequate but often difficult to fill.

Processing--Samples should be stored in clean containers after collection, and packed in ice while in the field. Samples should be stored at -20° C Although freezing is not required for all U.S. EPA procedures, it is recommended to minimize potential alteration of analytes by microbes. Care should be taken to prevent container breakage during freezing. Leave sufficient headspace for water to expand and place the containers at an angle when freezing.

No recommended holding time for sediments has been established by U.S. EPA. A maximum holding time of 6 mo (except for mercury samples, which should be held a maximum of 30 days) is consistent with the maximum holding time recommended by U.S. EPA for water samples (U.S. EPA 1985).

Laboratory Procedures--

Analytical Procedures--Priority pollutant metals should be analyzed according to procedures described in Tetra Tech (1986a). Prior to removing each aliquot for analysis, samples should be mixed thoroughly using nonmetallic utensils. Mix all water back into the sample. If there is any question regarding nonrepresentative material (e.g., twigs, leaves, shells, rocks, and any material larger than 1/4-in), U.S. EPA should be contacted for guidance. A separate aliquot should be analyzed for a total solids determination.

Digest sediment samples prior to analysis using the acids specified in the procedure (Tetra Tech 1986a). The digestate can then be analyzed by flame Atomic Absorption Spectrophotometry (AAS), graphite furnace AAS,

or Inductively Coupled Plasma (ICP), depending on the sample concentrations and required detection limit. Mercury digestion and analysis must be performed on a separate sample aliquot by cold vapor AAS.

ICP can be used to screen samples for elements that are present in relatively high concentrations. For those that may require more sensitive analysis, graphite furnace AAS can be used. Analysis by ICP can be subject to interelement interferences, while graphite furnace AAS can be subject to matrix problems from acid or salt content of the samples. Select the method with a detection limit that is adequate to determine compliance with 301(h) program criteria.

Calibration and Preventive Maintenance--In general, all instruments must be calibrated daily and each time the instrument is set up. For each analysis, calibration procedures should follow those for the specified method. Calibration standards must be prepared using the same concentrations of acids as will result in the samples following sample preparation.

After an instrument has been calibrated, verify the accuracy of the initial calibration by the analysis of certified control solutions at a frequency of once every 10 samples or every 2 h during an analysis run, whichever is more frequent, and after the last analytical sample. If a certified control solution is not available, use a standard that is composed of the analyte from a different source than that for the initial calibration. If the deviation of the continuing calibration verification is greater than the calibration control limits specified in the method, the instrument must be recalibrated, and the preceding 10 samples reanalyzed.

All equipment should have scheduled routine preventive maintenance, and a record of all maintenance performed should be noted in a logbook. Critical spare parts should be kept on hand.

Quality Control Checks--Analyze standard reference materials (SRM) [e.g., the National Bureau of Standards (NBS) Estuarine Sediment or the National Research Council of Canada (NRC) Marine Sediments] to provide a check on digestion efficiency and overall accuracy of the analysis. A minimum of one SRM should be analyzed for each survey or 2 percent of the total number of samples (i.e., 1 per 50 samples), whichever is more frequent.

To estimate precision, 5 percent of the total number of samples should be analyzed in duplicate or one duplicate for each survey, whichever is more frequent. When more than 20 samples are to be analyzed for one survey, the project manager may choose to implement a program of triplicate analyses. The overall percentage of replicates should be at least 5 percent. To estimate recovery, analyze samples spiked before digestion at the same frequency as duplicates. Add spike concentration approximately equal to the concentration found in the unspiked sample. An acceptable range in spike concentrations is 0.5 to 5 times the sample concentrations.

Carry a method blank through all digestion and analysis steps at a minimum frequency of once every 20 samples or once for each batch of samples analyzed, whichever is more frequent. If the concentration of the blank is less than the required detection limit, no correction of sample results is performed. If the blank contamination is extensive (>30 percent of sample value) then the batch of samples associated with the blank should be reanalyzed. Data should be corrected by the data user for the blank values between the required detection limit and the control limit.

For ICP analysis, additional QC checks should include an interference check sample to verify interelement and background correction factors. For graphite furnace AAS, additional QC checks should include duplicate injections, with the mean value reported. The relative standard deviation of the readings should be within control limits. Otherwise, the sample should be reanalyzed.

Corrective Action--If the concentration of the field or method blank is greater than the required detection limit, all steps in the sample handling should be reviewed. Many trace metal contamination problems are due to airborne dust. Keeping containers closed and rinsing all handling equipment immediately prior to use minimizes dust problems. In the field, mercury-filled thermometers should be handled carefully or avoided because broken thermometers are a potential source of severe mercury contamination. In the laboratory, samples for mercury analysis should be isolated from items such as polarographs or COD reagents.

Poor duplication may be caused by inadequate mixing of the sample before taking aliquots, inconsistent contamination, gross grain size differences, inconsistent digestion procedures, or instrumentation problems.

Poor performance on the analysis of the Standard Reference Material (SRM) or poor spike recovery may be caused for the same reasons as poor duplication. However, if duplicate results are acceptable, poor SRM performance or poor spike recovery may be caused by loss of analyte during analysis. To check for analyte loss during digestion and for low recovery due to interferences during analysis, spike the sample after digestion and compare the analysis to the predigestion spike. If the results are different, the digestion technique should be adjusted. If the results are the same, dilute the sample by at least a factor of 5 and reanalyze. If spike recovery is still poor, standard additions, matrix modifiers, or another method is required.

Data Quality and Reporting--Report measurements as mg/kg to a maximum of three significant figures on a dry-weight basis. Detection limits can vary widely because of methods and instrumentation. Consult the analytical method to determine expected detection limits, precision, and accuracy. Detection limits actually obtained should be reported for each sample.

The laboratory data summary should include duplicate, spike, and blank results and state clearly if and how any data were blank-corrected. Data

to be included in the ODES database should be blank-corrected by the data user. The laboratory data summary should also include the following information to allow independent QA review:

- Digestion procedures
- Quantity of sample digested and final dilution volume
- Percent solids
- Instrument detection limit for each element
- Method of detection (i.e., graphite furnace, flame, ICP, hydride, cold vapor)
- Deviation from the prescribed methods
- Blank associated with sample
- Problems associated with analysis.

For a more thorough QA review, additional documentation (e.g., calibration curves) may be requested.

Priority Pollutant Organic Compounds

Field Procedures--

Collection--Priority pollutant organic compounds can be separated into purgeable (volatile) and extractable (acid, base, and neutral, including pesticides and PCBs) compounds. Container preparation and collection techniques differ for these two groups. Sediment samples for analysis of extractable compounds should be collected in 240-mL (8-oz) or larger, wide-mouth glass jars with TFE-lined screw lids. The container, lid, and liner should be detergent washed, rinsed twice with tap water, once with distilled water, once with acetone, and once with high-purity methylene chloride. Firing of the glass jar at 450° C for 1 h may be substituted for the final solvent rinse. Collection of a minimum of 200 g (wet weight) of sample should provide enough material for a full analysis and all required QC analyses. Headspace should be left to facilitate mixing of the sample.

If a volatile analysis is required, two separate 40-mL glass containers should be filled leaving no headspace. This container, screw cap, and septum should be washed with detergent, rinsed once with tap water, rinsed again with distilled water, and dried at >105° C. Use of a solvent rinse will interfere with the analysis. To obtain a sample with no headspace, fill the vial to overflowing so that a convex meniscus forms at the top if there is adequate water in the sediment. With the liner's TFE side down, place the cap carefully on the opening of the vial, displacing the excess water. Once sealed, invert the bottle to verify the seal by demonstrating the absence of air bubbles. Samples for volatile analyses should be taken only from single grab samples because many of the volatile compounds of interest may be lost while compositing.

An empty sample jar carried through all processing and handling will serve as a field blank. A solvent rinse of the bottle should be analyzed

by the lab with each batch of samples received to serve as a check on contamination that may occur during shipping and storage. The solvent should be the same as that used for sample extraction.

Processing--Samples should be stored in the dark at 4° C, on ice, or frozen until extraction. Care should be taken with frozen samples to prevent container breakage by leaving headspace for the water to expand and by freezing containers at an angle. U.S. EPA gives no official guidance on sediment holding times but recommends that water samples for extractable organic compounds stored at 4° C be extracted within 14 days of collection. Because sediments can be frozen at -20° C, longer holding times (e.g., up to 6 mo) are appropriate. Extracts should be analyzed within 40 days of extraction. Effort should be made to analyze the samples as soon as possible after extraction because some of the more labile analytes may degrade in solution. Degradation may occur even in the dark under refrigeration, possibly as the result of free radical formation. Freezing is not recommended for volatile samples because no headspace is to be left in the vials. A maximum holding time of 14 days for analysis of volatile compounds in sediment samples would be consistent with the holding time recommended by U.S. EPA for water samples.

Laboratory Procedures--

Analytical Procedures--Priority pollutant organic compounds should be determined according to procedures described in Tetra Tech (1986a). Before each aliquot is removed for analysis, the sediment and any standing water should be stirred well to create a homogeneous mixture. If there is any question regarding possible nonrepresentative material (e.g., twigs, leaves, shells, rocks, and any material larger than 1/4-in), request guidance from U.S. EPA. A separate aliquot should be analyzed for a total solids determination.

To obtain meaningful results, an efficient extraction of the compounds of interest must be performed. The length of time a sample should be extracted

varies with method and matrix. When dealing with an unfamiliar method or matrix, step-by-step testing should be performed to determine completeness of extraction and to identify special problems. For instance, it has been found when using the Soxhlet method with wet sediments, the sample must be stirred two to three times during the procedure to prevent channeling.

Removal of elemental sulfur from marine sediments is critical for improving column resolution in gas chromatography, and for low-level detection of compounds such as PCBs by gas chromatography/electron capture. Cleanup of the ample extracts using column chromatography is often necessary to remove interferences. Calibration of the columns enables the compounds of interest to be collected in the proper fraction.

Cross-contamination between samples should be avoided in all steps of analysis beginning with clean glassware. Injection micro-syringes must be cleaned well between uses. If separate syringes are used for injection of standard solutions any bias between syringes should be accounted for. Carryover can occur when high- and low-level samples are analyzed sequentially. Analysis of an appropriate solvent blank following a high-level sample may be necessary to check for carryover.

Generally, achievable detection limits for sediments are outlined by specific methods. Actual detection limits vary depending on sample size, final volume, co-extractive compounds, and the source and nature of sediment. Select the method such that detection limits are adequate to determine compliance to 301(h) program objectives.

Calibration and Preventive Maintenance--Before beginning analysis of samples, a calibration curve that brackets the working range must be established. This calibration should be repeated after each major equipment disruption. Calibration checks of the GC/MS system should be done at the beginning and end of the day and at least every 12 h to demonstrate that the instrument's response is within control limits. Specific tuning criteria (e.g., DFTPP, BFB) are provided in each method. Calibration checks of

the GC/ECD system should be done at the beginning of the day and verified at least every 6 h. These are only recommended minimum frequencies and the nature of the samples may necessitate more frequent verification.

A routine QC check for each lot of the analytical reagents being used in extraction can prevent undetected contamination problems. Also, each lot of alumina, silica gel, sodium sulfate, Florisil, resins, or charcoal used should be monitored as a possible source of contamination and cleaned as necessary. Each lot of surrogate mixture should be checked for contaminants. The efficacy of the materials listed needs to be evaluated as there is variation between lots. Proper storage is essential for these materials.

Equipment should be maintained and serviced routinely according to manufacturer's instructions and good laboratory practices. Logbook records should document maintenance for each measurement device. Critical spare parts should be kept on hand.

Quality Control Checks--Duplicates and matrix spike analyses should be performed to measure precision and accuracy. A frequency of 5 percent of each or one each per survey, whichever is more frequent, is the recommended minimum. When more than 20 samples are to be analyzed for one survey, the project manager may choose to implement a program of triplicate analyses. The overall percentage of replicates should be at least 5 percent. Method interferences can be caused by contaminated glassware, reagents, solvents, or processing hardware. These materials can be monitored for contamination by processing of 5 percent method blanks, or one per sample set, whichever is more frequent. Addition of known amounts of surrogate compounds to each sample will serve to monitor preparation and analysis of samples. Standard reference material should be analyzed if available, as another measure of accuracy. Once for each survey or 2 percent of the total number of samples, whichever is more frequent, is the recommended minimum.

Corrective Action--When results of QC samples fall outside of established limits, several courses of action are available. Contamination in the lab reagent blank sample is cause for similar findings of the same compounds in samples to be suspect. If contamination is extensive, reanalysis of the whole associated group may be in order. Blank contamination should be kept to less than 10 percent of sample values and preferably below the method detection limit. Contamination found in the field blank should be considered when looking at the associated sample data. Extensive contamination of lab or field blanks (>30 percent of sample values) should lead to a detailed review of laboratory, sampling, transport, and storage procedures. Phthalates, methylene chloride, and toluene are common laboratory contaminants that may be detected in blanks above the method detection limit.

Poor duplication may be caused by inadequate mixing of the sample before removing aliquots, inconsistent contamination, inconsistent extraction procedures, or instrument problems. The project manager should be contacted when results exceed the control limits. Further replication of an analysis may be necessary to determine the reason for the poor results.

Poor spike recovery may be caused for the same reasons as poor duplication or by matrix effects produced by co-extracted materials. If the spiked compound is added at a concentration much less than that found in the sample, recovery may be difficult to determine. This problem is difficult to avoid as most environmental samples contain unknown concentrations of organic compounds. To check for analyte loss during processing, a step-by-step examination of the method using a spiked blank is necessary, with measurements of the analyte at each step.

Sample results that fall outside the established calibration curve are suspect until linearity of the instrument response can be shown at that concentration or until the extract is diluted appropriately and reanalyzed. Extremely high concentrations of organic compounds may saturate

the extraction capabilities of the method and may necessitate re-extraction of a smaller sample size or use of a more appropriate method.

Emulsions, colored extracts, or unusual chemical behavior of a sample should be noted and considered when reviewing results. Modifications of a method by an experienced chemist may alleviate some problems. All deviations from specified methods should be documented in logbooks.

If the continuing calibration (single point) falls outside control limits, no samples should be analyzed until the calibration is within these limits. The standard should be reinjected to confirm the problem and to discount the possibility of operator error. If still outside of control limits, the instrument should be recalibrated (multi-point), and at least the previous sample reanalyzed and results compared. This may indicate that reanalysis of all samples since last calibration is unecessary.

Data Quality and Reporting--A data summary for each sample should be submitted. All data should be dry-weight corrected, and reported as ug/kg using two significant figures. Data should not be blank-corrected. Spike recoveries, relative percent difference between duplicates, and blank results (ng/sample)should also be submitted. The following information is also needed for each sample to allow independent QA review:

- Sample weight extracted
- Percent solids
- Final volume of extract
- Amount of extract injected
- Instrument detection limits
- Method detection limit for each compound

- Blank associated with sample
- Deviations from the prescribed method
- Problems associated with analysis.

For a more thorough QA review, additional documentation (e.g., chromatograms, computer listings) may be requested.

Infauna

Field Procedures--

Construction of Sieve Boxes--Sieve boxes should be of sturdy construction, with high sides to minimize the possibility of material washing out of the box. They should also be large enough to receive the benthic sample and wash water without clogging. Swartz (1978) recommends boxes 40 cm x 40 cm. The boxes should also be constructed to permit nesting of the sieves, especially if more than one mesh size will be used. A typical sieve box might be constructed as in Figure 8. Note the application of silicone sealant at the mesh wood interface. This sealant will prevent organisms from crawling into the space where the mesh enters the box frame. All wood pieces used in construction of the sieve boxes should be treated with fiberglass or epoxy resin (of the types used in boat building), sanded, and painted.

It is imperative that the mesh used in the sieve boxes meet specifications outlined in ASTM E-11, USA Standard Z23.1, AASHO M92, and Fed. Spec. RR-S-366b. Such mesh is available from scientific supply houses. Inferior mesh will not have uniform openings and will not be durable.

Before each cruise, the sieves should be examined for damage and wear. Look for rips in the mesh, irregular mesh spacing, and sand grains caught in the mesh. Use water pressure to dislodge the sand. Do not use sharp objects, as the mesh may be damaged or the mesh spacing may be altered.

Fixative Preparation--The fixative most commonly used for benthic infauna samples is formalin, an aqueous solution of formaldehyde gas. Under no circumstances should ethyl or isopropyl alcohol (preservatives) be used in place of the formalin. Penetration of the alcohol into body tissues is too slow to prevent decomposition of the specimens.

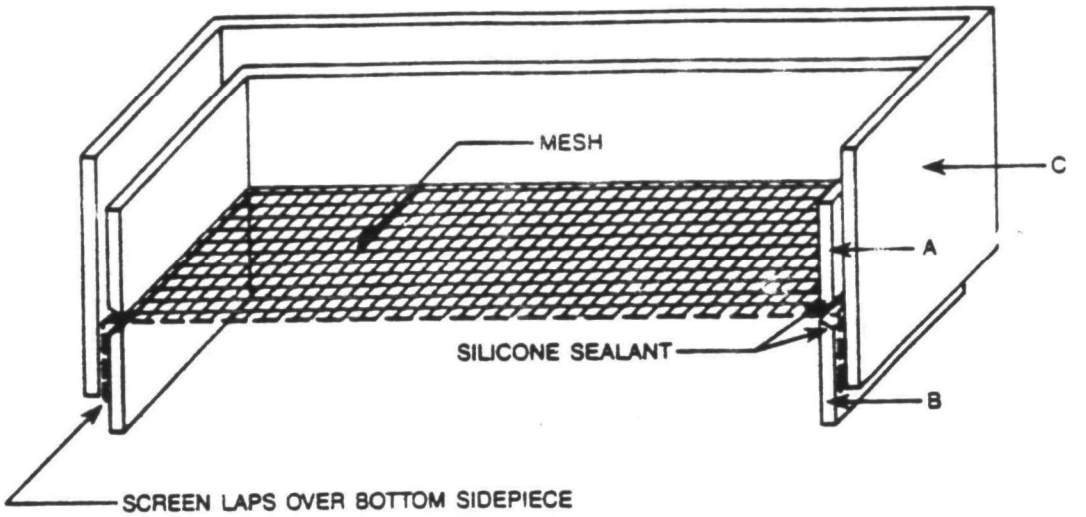

CONSTRUCTION

1. Construct upper and lower box frames (A,B).
2. Nail or staple mesh over lower frame.
3. Mount upper frame on lower frame.
4. Nail and glue side pieces (C) on upper and lower frames (A,B), offsetting to permit sieves to be nested.
5. Use waterproof glue (resorcinol, epoxy) and nails throughout construction.

Figure 8. Construction of a sieve box.

Formalin solutions of 5-20 percent strength are recommended for fixing marine organisms (Gosner 1971; Birkett and McIntyre 1971; Smith and Carlton 1975; Swartz 1978). Solutions of 10-15 percent are used most commonly. It is recommended that at least 2 L of diluted formalin solution be on hand for each replicate sample to be collected, unless experience has shown otherwise.

The formalin solution should always be buffered to reduce acidity. Failure to buffer may result in decalcification of mollusks and echinoderms. Ideally, pH should be at least 8.2, as calcium carbonate dissolves in more acidic solutions. Borax (sodium borate, $Na_2B_4O_7$) should be used as a buffer because other buffering agents may hinder identification by leaving a precipitate on body tissues and setae.

To prepare a 10-percent buffered formalin solution, add 4 oz of borax to each gallon of concentrated formalin (i.e., a 40-percent solution of formaldehyde in water). This amount will be in excess, so use the clear supernatant when making seawater dilutions. Dilute the concentrate to a ratio of one part concentrated formalin to nine parts seawater. Seawater will further buffer the solution. Seawater also makes the fixative isotonic with the tissues of the animals, thereby decreasing the potential for animal tissues to swell and break apart, as often happens with freshwater dilutions of formalin.

It is desirable to prepare fresh fixative prior to each sampling excursion, as formalin will eventually consume all the buffering capacity of the borax. This occurs because the formaldehyde gas is in polymer form when in solution. As the borax neutralizes the excess acidity, the polymer chains become unstable and break apart, exposing new acid sites. Do not expose formalin solution of any strength to cold temperatures because the formaldehyde polymers will degrade into paraformaldehyde and the solution will have to be discarded.

Rose Bengal Preparation--Rose bengal may be added to the fixed samples either as a powder or a solution. Both are effective. However, it is easier, and perhaps less expensive, to use a solution. Simply mix a concentrated solution of rose bengal in tap water and put it in a dropper bottle. The relative quantity of stain being used is much easier to estimate when dispensed from a dropper than when added in powder form.

Relaxant Preparation--Several relaxants may be used on benthic organisms prior to fixation. However, a solution of magnesium chloride in tap water is effective on a wide variety of taxa (Gosner 1971), and is easily prepared and used. The $MgCl_2$ solution should be isotonic with seawater. To prepare, dissolve 73-g $MgCl_2 \cdot 6H_2O$ per liter of tap water. Anhydrous $MgCl_2$ can be purchased (at considerably more cost) and used to prepare the relaxant solution. However, accurate determinations of mass are very difficult because of the propensity of the crystals to absorb atmospheric moisture. Hence, use of the hydrated form is recommended.

Sample Containers--It is recommended that glass or plastic jars be used for sample fixation and storage. Plastic lids are preferable to metal lids because formalin corrodes metal. One- or two-quart containers are usually adequate for a 0.1-m^2 sample after washing. However, more or larger (i.e., gallon) containers may be required if large quantities of gravel, peat, wood chips, or other large particles occur in the sample. All sample containers should be labeled internally and externally using waterproof materials.

Screen Mesh Selection--It is critical that an appropriate screen mesh size be chosen for separating the infauna from the sediments. The most frequently used sieve mesh sizes have been 0.5 mm and 1.0 mm. These sizes roughly correspond to a trough in the size spectrum for benthic organisms. This trough occurs at 0.5-1.0 mm and separates meiofauna from macrofauna (Schwinghamer 1981). Therefore, major deviations from these (or intermediate) screen sizes will greatly affect the suite of organisms collected.

Mesh size selection depends largely on the objectives of the study. Macrofaunal recruitment and settlement studies definitely require the use of 0.5-mm mesh, while studies of the distributions and abundances of primarily adult animals usually require only 1.0-mm mesh. The major disadvantage of using the larger mesh size is that some small species, particularly polychaetous annelids, may be lost. Disadvantages associated with use of the smaller mesh size are primarily related to processing time. The residual samples (after washing) contain more detritus and sediment, more juvenile macrofaunal forms, and more meiofauna. Therefore, they require considerably more time to sort. The subadult forms are also much more difficult to identify, which increases the identification time. It is not unusual for samples washed on 0.5-mm mesh to require 50 percent more processing time than samples washed on 1.0-mm mesh. One may argue that the retention of juveniles permits a more complete characterization of the community. However, because many of the juveniles that recruit into a community are rapidly removed through competition or predation, their inclusion in samples may not represent the more stable adult community that eventually inhabits a site.

A wise practice is to use a set of stacked screens with a 1.0-mm mesh sieve sitting on top of a 0.5-mm mesh sieve. Both subsets of the sample can be handled separately, and either or both can be examined based upon study objectives. Monitoring programs conducted on the west coast of the United States generally rely on the 1.0-mm analysis, while the 0.5-mm sample is sometimes archived in case something unusual is found. By contrast, studies on the east coast of the United States tend to sample the 0.5-mm fraction more frequently.

The same mesh size should be used consistently through time to permit temporal comparisons of the biota within the study area. If possible, the chosen mesh size should be consistent with that used for past studies in the area and for other studies within the biogeographic region. Such

consistency will facilitate biological comparisons with historical data and with data from adjacent areas.

Collection--Collect benthic samples in accordance with the on-board procedures for grab sampling discussed earlier.

Processing--After qualitative characteristics of the sample have been recorded, sediments should be washed on the designated sieve(s), using one of several possible methods. Sediments may be gently sprayed with water from above, agitated by hand in a washtub of water, or washed using a combination of these techniques. For all methods, it is imperative that the samples be washed gently to minimize specimen damage. A few minutes extra care in the field can save hours of time for the taxonomist, and will result in a better data set.

For most surveys, it is probably easiest to wash the samples from above with a gentle spray, because efficient, easy-to-use gear may be constructed to hold the grab and sieve boxes. An example of a grab stand is shown in Figure 9. The top section is designed to accept the grab sampler. Wash water and sediment drain through the openings in the bottom of the top tray and into the lower section of the sieving stand, where the screen box(es) is (are) located.

All wash water should be filtered or screened through mesh with openings one-half the size of those used in the survey, so as not to introduce planktonic or bentho-pelagic organisms into the samples. Failure to screen in this way can result in increased sorting time. It can also compromise the quality of the samples, because it is impossible to distinguish bentho-pelagic organisms caught by the grab from those entrained in the wash water.

Sieving stands should be designed to fit the specific sampling vessel, and should never be too large for the available space. Moreover, they should have attachment points (e.g., eyebolts) at appropriate places with

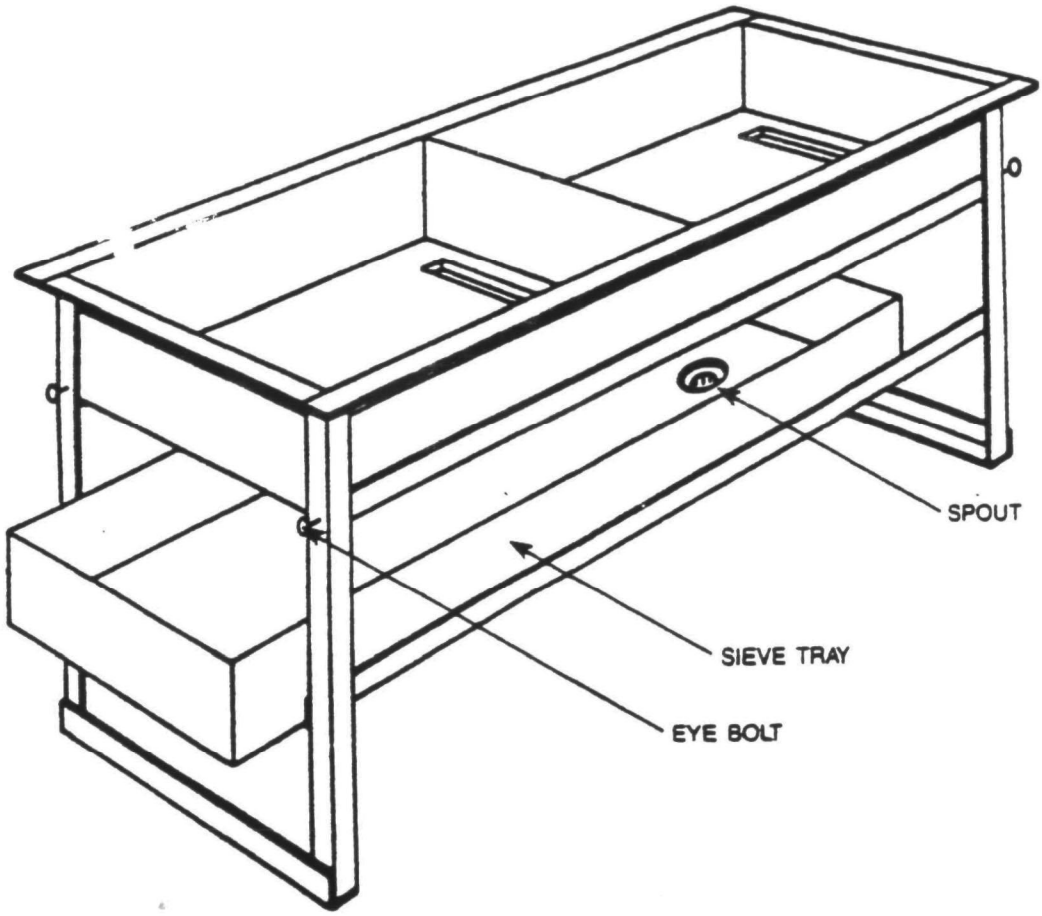

REFERENCE: STRIPLIN AND MAUPIN (1982)

Figure 9. Example of a sieving stand. Screen boxes (not shown) are placed in sieve tray.

which the stand may be lashed to the deck or rail. As shown in Figure 9, all waste water should exit the sieve tray via a spout, to which a hose should be attached. The wash water can then be discharged overboard through a scupper. This is especially important in cold weather, when wash waters may otherwise freeze on the deck and safety may be compromised.

After the contents of the grab are emptied into the sieving stand, the sampler should be washed of all sediments adhering to the inside and prepared for descent. Take care not to wash any sediment clinging to the outside of the grab into the sample. Sediments in the top tray should be broken apart gently using the spray. Breaking up the sediments in the upper tray and not in the screen boxes eliminates one source by which infaunal organisms become damaged. Sediments retained on the sieve screens should be gently washed in the lower section of the sieving stand.

Once sieving is completed, the screen box should be held at an angle and the remaining material gently washed into one corner. The sample may then be transferred to an enamel pan or jar for relaxation, or to a jar for fixation, using as little water as possible. Place the permanent internal sample label in the enamel pan or jar at this time to avoid confusion later. If more than one screen fraction is generated, be sure to keep them separate throughout all phases of field and laboratory processing. Be sure to check the screen for organisms trapped in (or wound around) the mesh wires. If they cannot be dislodged with gentle water pressure, use a pair of jewelers forceps. Be careful not to damage the wire mesh. After the screen has been checked for remaining animals and sample removal is complete, backwash the screen with a high pressure spray to dislodge any sediment grains that may be caught in the mesh. Repeat these steps after every sample.

Although relaxation of the organisms in the sample is often omitted from field sampling programs, it is highly recommended for two reasons. First, relaxed organisms are less likely to distort their shape when fixed, because the muscles are less likely to contract. The more natural the

appearance of the body, the easier it is to identify the animal. Second, relaxation helps prevent autotomy, the process whereby organisms (especially polychaetes) fragment themselves in reaction to the fixative. Complete animals are much easier to identify than fragments, and are necessary for the identification of species in some taxonomic groups (i.e., maldanid polychaetes).

Once the sample is in a jar or enamel pan, it should be immersed in relaxant (e.g., $MgCl_2$) for about 30 min. After immersion, the sample should be poured through a small sieve with mesh openings half the size of those required for washing the sample. Be sure to recapture the relaxant, as it may be reused several times (Fauchald 1977). After the animals are screened, gently transfer the sample to a jar for fixation, using as little water as possible.

In lieu of using $MgCl_2$ as a relaxant, it may be possible to minimize damage to the organisms by increasing the strength of the formalin solution (Word, J., 13 February 1985, personal communication). A strong solution may kill the organisms before they have time to contract or fragment. Some experimentation may be needed to determine whether this method is effective in a given region, and if so, at what formalin concentration.

As mentioned earlier, a 10-percent solution of borax-buffered formalin is usually used to fix benthic organisms. However, samples containing large amounts of fine-grained sediments, peat, or woody plant material require higher concentrations. The sample should be covered with fixative to a mininum depth of approximately one third that of the sample itself. Thus, the largest sample that can be placed in a jar occupies only three-quarters of the available volume. The fixative will occupy the remaining one-quarter of the volume. The formalin solution should be added to the sample jar until it is completely filled. This will minimize abrasion during shipping and handling. If the sample volume exceeds three-quarters of the jar volume, more than one jar should be used.

Rose bengal may now be added to the sample. Add enough to turn the fixative cherry-red. This vital stain aids the sorting process by making animals more visible. However, it renders the body of the organism opaque, and thereby makes some taxonomic manipulations difficult. For this reason, the addition of rose bengal is considered optional.

After the formalin and rose bengal (if desired) have been added to the sample jar, close the container and gently mix the contents to ensure that adequate fixative reaches all the organisms. The samples should now be placed in protective containers for storage and transport to the laboratory. Wooden boxes with handles are good containers for jars because they are durable and easily constructed. Bags should be placed in durable water-tight containers such as snap-lid buckets.

On board ship, samples should be stored so as to minimize exposure to sunlight and temperature extremes. They should also be stored in a stable part of the ship to minimize agitation. If special racks are not available to keep the shipping boxes stationary, they should be lashed down.

Laboratory Procedures--

Equipment and Supplies--The laboratory should be equipped with both stereo dissection and compound microscopes. One dissection microscope capable of magnification to 25-power should be available for each sorter, and one dissection microscope capable of magnification to 50-power should be available for each taxonomist. Compound microscopes should be capable of magnifications up to 1,000-power. At a minimum, one compound microscope for each three taxonomists is needed; one compound microscope for each two taxonomists is preferable. The optics of the dissection and compound microscopes should be of high quality to reduce sorting and identification times and to increase acccuracy by reducing the chances for misidentifying

organisms. Other necessary laboratory supplies include jewelers forceps, fine scissors, small scalpels, fine needles, flat and depression microscope slides, cover slips, small dissection trays, immersion oil, and glycerol alcohol (half glycerol and half 70-percent alcohol).

Preservative Preparation--After the specimens are fixed, alcohol should be used as a long-term preservative. Either 70-percent ethanol in water or 70-percent isopropanol may be used. Although isopropanol is less expensive than ethanol, it is more unpleasant to work with. Specimens preserved in isopropanol are unsuitable for histological examination. If future studies of anatomy or reproductive biology are anticipated, ethanol must be used.

It is most cost-effective to purchase isopropanol and ethanol in bulk solutions of 5-percent water and 95-percent alcohol. Purer grades are available, but more costly. To prepare 1 L of a 70-percent solution of either alcohol, add 263 mL of water to 737 mL of 95-percent alcohol solution. It may be necessary to use distilled water to dilute the alcohol solution because hard water mixed with alcohol creates a milky precipitate that makes examination of the samples difficult. The alcohol solution is most easily stored in a glass jar with a clamped siphon hose. This apparatus allows workers to accurately dispense small quantities without wastage.

Use of the 70-percent alcohol/30-percent water solution is adequate for the preservation of most infaunal organisms. For long-term storage of crustaceans, however, it is recommended that glycerine be substituted for some of the water. The glycerine helps keep the exoskeletons supple, thereby facilitating examination and manipulation. This is especially critical for crustaceans archived in the reference collection (see below). An appropriate glycerine-alcohol solution would be 5-percent glycerin in 70-percent alcohol.

Analytical Procedures--Samples should remain in the formalin-seawater solution for a minimum of 24 h to allow proper fixation (Fauchald 1977). After 24 h, the samples may be washed (i.e., rescreened) on a sieve with mesh openings half the size of those used in the field. The smaller screen size ensures that specimens collected in the field will be retained in the sample regardless of shrinkage or breakage resulting from contact with the formalin. It is desirable to wash the formalin from the samples as soon as possible after the initial 24 h because the buffering capacity of the borax in the formalin solution decreases continually.

If the sample consists of multiple jars, locate all jars prior to rescreening and wash them at the same time. Carefully pour the contents of each jar into the appropriately sized screen and rinse the jar to remove adhering organic material, sediment, or organisms. To reduce the possibility of sample loss through spilling or splashing, do not fill the screen more than half full.

Caution should be exercised when handling formalin mixtures because formalin is toxic and carcinogenic (Kitchens et al. 1976). It can cause irritation to the eyes, nose, and throat at concentrations as low as 1.0 ppm. Sensitivity in humans varies with the individual, but in general, the detection limit is approximately 2 ppm. The technician doing the rescreening should wear protective clothing, rubber gloves, and safety goggles, and should work under a properly ventilated fume hood. A protective vapor mask should be worn, even when working near open windows or under a ventilation hood.

There are several acceptable methods for rinsing formalin from a sample. One method is to gently flush the sample with large quantities of fresh water from a low-pressure faucet or hose, being careful not to splash any sample material. The rinse water should be discharged into a sanitary sewer. A second method is to partly immerse the sieve in a plastic tub filled with fresh water and wash the sample by moving the sieve in an up-

and-down motion. Care must be taken not to let the water rise above the top of the sieve.

Allow the rinse water to completely drain from the sieve and lightly rinse the sample with a solution of 70-percent ethanol from a squirt bottle. Carefully wash the sample material into a sample jar filling it no more than three-quarters full. Avoid scraping the sample across the screen with the spoon. Rinse the last bit of material into the jar using the squirt bottle of alcohol. Fill the jar to the top with the 70-percent alcohol solution and screw the lid on tightly. Gently shake and invert the jar several times to ensure proper mixing.

Each jar should have one internal label and two external labels. The internal label should be written with indelible ink on waterproof, 100-percent rag paper. Paper with less than 100-percent rag content or that is not waterproof will fall apart in the 70-percent alcohol mixture, and the ink will dissolve. The two external labels should be preprinted and should be labeled with an indelible marking pen. One label should be attached to the jar and the second should be attached to the lid of the jar. All three labels must include all information recorded on the field data tag, plus all other information needed to ensure proper identification of the sample (e.g., if more than one jar, label them 1 of 2, 2 of 2, etc).

Keep all jars of a given sample together (if more than one), and all replicate samples from a given station together. As the samples are shelved prior to sorting, each should be cross-referenced to the field log sheet. At this point the sample custodian should date and initial the rescreening section of the sample-tracking form for each station. Store washed samples in an upright position, at a cool temperature, and away from direct sunlight. Storage should be in a secure place, where sample containers are not exposed to breakage or tampering.

Several techniques can be used to sort organisms from sediment. The most common technique involves placing a small amount of the sample into a glass or plastic petri dish and using a pair of jewelers forceps to sort through the sample in a systematic manner, removing each organism. This entire process should be done while viewing the sample through a 10-power dissecting microscope. Care must be taken that enough liquid is present in the petri dish to completely cover the sample, otherwise, reflections from the sediment/liquid interface will cause distortions and the sorter may miss some organisms. Each petri dish of material should be sorted twice to be sure that all organisms are removed.

A second sorting technique is a flotation method, which is particularly effective when the sediment residue is primarily coarse sediment grains containing small amounts of organic matter (e.g., wood fragments, leaf debris, sewage sludge). The sample is first washed with fresh water in a large flat tray. The less dense material that becomes suspended in the fresh water (organic material, arthropods, and most soft-bodied organisms) is carefully poured into a sieve, and is sorted using the standard technique described above. The remaining material is covered with liquid and sorted using a 5-power self-illuminated hand lens. Organisms remaining in this portion of the sample generally include molluscs and some tube-dwelling or encrusting organisms that are associated with sand grains. Because it is difficult to see extremely small organisms with the 5-power hand lens, the sorter must remove all molluscs and polychaete tube fragments for closer inspection. All material collected from this portion is placed into a labeled sample jar and viewed under a 10-power dissecting microscope to remove organisms from tubes and to ensure that the molluscs were alive when captured.

Both sorting techniques expose the sorter to alcohol fumes. Because these fumes can be irritating to some people, the sorting process can be done using fresh water. However, as each portion of the sample is sorted, it should be drained and returned to the alcohol solution immediately.

Each sample should be sorted by only one person. Organisms should be sorted into the following major taxonomic groups: Annelida, Arthropoda, Mollusca, Echinodermata, and miscellaneous phyla (combined). All organisms should be placed in large vials containing 70-percent alcohol solution. The exception is Ophiuroidea, which require air-drying for identification. Removal of the majority of arms from certain Ophiuroidea (e.g., Amphiuridae) permits easier identification. This procedure may be performed by experienced sorters to minimize identification time. (Note: Special handling of Ophiuroidea should be conducted after biomass analyses, if biomass analyses are performed.) Each vial containing a major taxonomic group should have an internal label listing the survey name, station designation, water depth, date sampled, and field screen size. All vials in the same sample should be stored in a common container and immersed in the 70-percent alcohol solution. To reduce evaporation of alcohol, vial and container lids can be sealed with plastic tape.

When required, biomass estimates for the major taxonomic groups should be made prior to identifying the organisms to the species level. However, it is recommended that taxonomists examine the major taxonomic groups before biomass measurements are made, to ensure that sorters have correctly grouped all individuals and fragments. Biomass should be estimated to the nearest 0.1 g (wet weight). All specimens of taxa within the following major groups should be composited for biomass analyses: Annelida (principally polychaete worms), Mollusca (principally bivalves, gastropods and aplacophorans), Arthropoda (principally crustaceans), Echinodermata (principally asteroids, ophiuroids, echinoids, and holothuroids), and miscellaneous taxa (combined). These five categories generally are adequate to characterize the standing stocks of the major infaunal groups. They also are sufficiently distinct from each other to permit proper assignment of fragments to each of the groups. All fragments should be placed in their respective major taxonomic groups prior to weighing.

There are several major problems associated with the collection and interpretation of biomass information. Some taxa lose weight when immersed in preservative fluids, while others gain weight (Howmiller 1972; Lappalainen and Kangas 1975; Wiederholm and Eriksson 1977; Mills et al. 1982). For this reason, the most accurate biomass estimates are performed on live material. However, it is rarely practical to sort and weigh live specimens. Accurate measurements of biomass are further compromised by evaporation from the specimens while they are on the balance.

Several methods of measuring biomass are possible. One technique is to estimate the difference in weight of a tared beaker filled with preservative before and after organisms are placed in the beaker. The individual organisms are not blotted prior to weighing, and as few individuals as possible are transferred to the weighing container. These procedures minimize the transfer of fluids held within a pile of individuals. This technique can be used for preserved or live animals, and appears to introduce the least amount of variation into the weighing process.

A second technique for biomass determination consists of air-drying the organisms on absorbent paper for a specific length of time (e.g., 5 min). Because 70-percent ethanol is volatile, small variations in drying time may increase the errors associated with the weight measurements. A container open at one end and covered at the other end with a 0.25-mm mesh screen (maximum mesh opening) can be used to hold the organisms for weighing. After the tare weight of the container is measured, the animals are carefully placed into the container. The container with organisms is then placed on a paper towel and allowed to air dry for exactly 5 min prior to weighing. The weight of the organisms is obtained by subtracting the weight of the container with the organisms from the tare weight of the container. Extremely large organisms (e.g., large molluscs or asteroids) should be weighed individually.

After biomass estimates are completed, identification and counting of the organisms may begin. Identifications should be to the lowest taxonomic level possible, usually the species level. For incomplete specimens, identify all fragments, but enumerate only the anterior ends (i.e., heads). All identifications require the use of binocular dissecting and compound microscopes. If possible, at least two pieces of literature should be used for each species identification, one of which should be the original description. Moreover, each species identification should be checked against a reference specimen from a verified voucher museum collection.

After completing an identification, all organisms of a single species should be placed in a vial containing 70-percent alcohol. All vials should be stored in a common jar with the original internal label (from the field), and immersed in 70-percent alcohol. Each vial should contain an internal label with the following information: species name, number of specimens, survey name, station number, replicate number, collection gear, water depth, date of collection, latitude, longitude, and initials of the taxonomist. Any specimens removed from the sample jar and placed in the reference collection should be so noted (species, number) on the sample identification sheet.

Each taxonomist should record initial identifications and counts in a bound, hardcover notebook, which should also include notes and comments on the organisms in each sample. Upon completion of the sample, the data should be transferred in ink to the sample data sheets and double-checked. The taxonomist should then sign and date the sample data sheet. All notebooks should be kept in the laboratory at all times so the laboratory supervisor can check questionable identifications and follow the progress of each sample. Erasures from notebooks or data sheets are not permitted. Simply draw a horizontal line through incorrect data, initial and date it, and indicate why the data were removed.

Calibration and Preventive Maintenance--The analytical balance used for biomass determinations should be calibrated weekly, at a minimum.

The balance and all microscopes should be serviced at regular intervals. Annual service and inspection is adequate in most cases, unless the manufacturer recommends otherwise.

Taxonomic identifications should be consistent within a given laboratory, and with the identifications of other workers. To that end, at least three individuals of each taxon should be sent for verification to recognized experts in museums and/or academic institutions. The verified specimens should then be placed in the permanent reference museum. Continued collection of a verified species does not require additional expert verification. Participation of the laboratory staff in a regional taxonomic standardization program is required (if available) to ensure regional consistency and accuracy of identifications. The reference collection should be started and completed as early as possible during the project.

All specimens in the reference collection should be in labeled vials that are segregated by species and sample. For example, there may be three labeled vials of Gemma gemma, one from each of three samples. More than one specimen may be in each vial. The labels placed in these vials should be the same as those used for specimens in the sample jars. It is important to complete these labels because future workers may not be familiar with the survey, station locations, and other details of the work in progress. In addition, the reverse side of the label should contain information about the confirmation of the identification by experts in museums or other institutions (if appropriate). Such information would include the outside consultant's name, institution, and date of verification. All vials for a given species should be placed in a single jar filled with alcohol. To redur evaporation of alcohol, the lids of vials and jars can be sealed with pla tape. The species (or other taxonomic designation) should be clearly wr on the outside and on a large internal label. Reference specimens be archived alphabetically within major taxonomic groups.

A computer listing of each species name, the name and affiliation of the person who verified the identification, the location of the individual specimen in the museum, the status of the sample if it has been loaned to outside experts, and references to pertinent literature should be maintained by the laboratory performing identifications for the monitoring program. This listing should be available near the collection.

Reference specimens are invaluable, and should be retained at the location where the identifications were performed, in the offices of the funding agencies, or at a museum with long-term storage capabilities. In no instance should this portion of the collection be destroyed. One person should be identified as the curator of the museum collection and should be responsible for its integrity. Its upkeep will require periodic checking to ensure that alcohol levels are adequate. When refilling the jars, it is advisable to use full-strength alcohol (i.e., 95 percent), because the alcohol in the 70-percent solution will tend to evaporate more rapidly than the water.

Quality Control Checks--It is recommended that at least 10 percent of each sample be re-sorted for QA/QC purposes. Re-sorting is the examination of a sample or subsample that has been sorted once and is considered free of organisms. Each sample should be re-sorted by someone other than the original sorter. The 10-percent aliquot should be taken after the entire sample has been spread out in an enamel pan. It is critical that the aliquot be a representative subsample of the total sample.

A partial re-sorting of every sample should ensure that all gross sorting errors are detected. In addition, it should give added incentive to sorters to process every sample accurately. An alternate 10-percent QA/QC approach of re-sorting one entire sample out of every 10 processed does not have these advantages. Because 9 out of every 10 samples are not re-sorted, the probability of random gross errors going undetected increases, and the incentive of sorters to process every sample accurately decreases.

In addition to efficient sample sorting, consistent identifications of organisms among individuals and among sampling programs are critical to the collection of high quality data. Consistent identifications are achieved by implementing the procedures discussed below and by maintaining informal, but constant, interaction among the taxonomists working on each major group. One important procedure is to verify identifications by comparison with the reference collection. To ensure that identifications are correct and consistent, 5 percent of all samples identified by one taxonomist should be re-identified by another taxonomist who is also qualified to identify organisms in that major taxonomic group. Differences in opinion should be recorded and given to the senior taxonomist. It is the duty of the senior taxonomist to decide upon the proper identifications. The senior taxonomist may also decide whether the taxonomic level to which a given organism is identified is appropriate. If it is not, the senior taxonomist may decide to drop back to a higher taxonomic level, or to further refine the taxonomy of that group through additional study.

Three kinds of material should be archived during the course of any sampling program: sediment residue (after sorting), identified organisms, and reference specimens. First, the sediment residue (i.e., "grunge") should be characterized, and a representative aliquot should be archived. The characterization should include a description of the major sediment component (e.g., coarse to fine sand, wood, shells, or polychaete tube fragments, organic material, sewage sludge) and the volume of the total amount of material. An 8-dram vial filled three-quarters and topped off with 70-percent alcohol is sufficient for archiving these aliquots. Each vial should be labeled with the same information found on the internal sample label. All vials should be tightly stoppered and stored together in a container filled with 70-percent alcohol. Black electrical tape wrapped tightly around the lid of the large container will improve the seal and insure that the alcohol does not evaporate during storage. These archived

aliquots of sediment residue provide a qualitative reference sample should questions concerning sediment characteristics arise later.

When all identification and QA/QC procedures are completed, the jars containing the vials of identified species should be topped off with 5-percent glycerine/70-percent alcohol. The lids should then be sealed tightly with black electrical tape to prevent evaporation. All sample jars should be placed in containers filled with 70-percent alcohol for long-term storage. The containers should be fitted with a tightly sealed lid, and electrical tape should again be used to seal the joints. Each container should be labeled clearly with the survey name, date, and number and type of samples within it.

Corrective Action--Following QA/QC procedures discussed earlier, each sample residue should be checked for complete or nearly complete removal of organisms. Thus, each sample elicits a decision concerning a possible re-sort. When a sample is found that does not meet the specified removal criterion, it should be re-sorted. In addition, the previous three samples processed by that sorter should be re-sorted (regardless of their aliquot re-sort results) to ensure that sorting efficiency has been adequate. If one of the three samples is incompletely sorted, all samples processed by that individual should be re-sorted.

When a taxonomic error is found, it is necessary to trace all of the work of the taxonomist responsible for the error, so as to identify those samples into which the specific error may have been introduced. This process can be very time-consuming. However, upon completion of all taxonomic work, few (if any) taxonomic errors should remain in the data set. Avoiding errors through the constant interchange of information and ideas among taxonomists is the best way to minimize lost time due to misidentification.

Data Quality and Reporting--Generally, a sample sorting efficiency of 95 percent is considered acceptable. That is, no more than 5 percent

of the organisms in a given sample are missed by the sorter. Similarly, specimen identifications can reasonably be expected to be at least 95 percent accurate. All organisms must be identified to the lowest possible taxon, and to species level whenever possible. In cases where the identity of a species is uncertain, a species number will suffice (e.g., Macoma sp.1, Macoma sp.2). Numerical designations must be consistent throughout the study. Data for each replicate sample should be reported as numbers of individuals/m^2 for each species and as biomass (nearest 0.1 g wet weight/m^2) for each major taxonomic group.

BIOACCUMULATION/TRAWL ANALYSES

QA/QC procedures are presented in this section for the following three tissue/trawl variables:

- Priority pollutant metals
- Priority pollutant organic compounds
- Demersal fishes and epibenthic macroinvertebrates.

Organisms to be analyzed for these variables generally will be collected using an otter trawl. Operation of an otter trawl is discussed earlier in the general methods section.

Priority Pollutant Metals

Field Procedures--

Collection--The major difficulty in trace metal analyses of tissue samples is controlling contamination of the sample after collection. In the field, sources of contamination include sampling gear, grease from winches or cables, engine exhaust, dust, or ice used for cooling. Care must be taken during handling to avoid these and any other possible sources of contamination. For example, during sampling the ship should be positioned such that the engine exhausts do not fall on deck. To avoid contamination from melting ice, the samples should be wrapped in aluminum foil and placed in watertight plastic bags. The outer skin of the fish or shell of the shellfish acts as protection against metals contamination from the aluminum foil.

Sample resection and any subsampling of the organisms should be carried out in a controlled environment (e.g., dust-free room). In most cases, this requires that the organisms be transported on ice to a laboratory, rather than being resected on board the sampling vessel. It is recommended that whole organisms not be frozen prior to resection if analyses will be conducted only on selected tissues, because freezing may cause internal organs to rupture and contaminate other tissue. If organisms are eviscerated on board the survey vessel, the remaining tissue (e.g., muscle) may be wrapped as described above and frozen.

Resection is best performed under "clean room" conditions. The "clean room" should have positive pressure and filtered air. The "clean room" should also be entirely metal-free and isolated from all samples high in contaminants (e.g., hazardous waste). At a minimum, care should be taken to avoid contamination from dust, instruments, and all materials that may contact the samples. The best equipment to use for trace metal analyses is made of quartz, TFE, polypropylene, or polyethylene. Stainless steel that is resistant to corrosion may be used if necessary. Corrosion-resistant

stainless steel is not magnetic, and thus can be distinguished from other stainless steels with a magnet. Stainless steel scalpels have been found not to contaminate mussel samples (Stephenson 1979). However, low concentrations of heavy metals in other biological tissues (e.g., fish muscle) may be contaminated significantly by any exposure to stainless steel. Quartz utensils are ideal but expensive. To control contamination when resecting tissue, separate sets of utensils should be used for removing outer tissue and for removing tissue for analysis. For bench liners and bottles, borosilicate glass would be preferred over plastic if trace organic analyses are to be performed on the same sample.

Resection should be conducted by or under the supervision of a competent biologist. For fish samples, special care must be taken to avoid contaminating target tissues (especially muscle) with slime and/or adhering sediment from the fish exterior (skin) during resection. The incision "troughs" are subject to such contamination. Thus, they should not be included in the sample. In the case of muscle, a "core" of tissue is taken from within the area boarded by the incision troughs, without contacting them. Unless specifically sought as a sample, the dark muscle tissue that may exist in the vicinity of the lateral line should not be mixed with the light muscle tissue that consitutes the rest of the muscle tissue mass.

Prior to use, utensils and bottles should be thoroughly cleaned with a detergent solution, rinsed with tap water, soaked in acid, and then rinsed with metal-free water. For quartz, TFE, or glass containers, use 1+1 HNO_3, 1+1 HCl, or aqua regia (3 parts conc HCl + 1 part conc HNO_3) for soaking. For plastic material, use 1+1 HNO_3 or 1+1 HCl. Reliable soaking conditions are 24 h at 70° C (APHA 1985). Do not use chromic acid for cleaning any materials. Acids used should be at least reagent grade. For metal parts, clean as stated for glass or plastic, except omit the acid soak step. If trace organic analyses are to be performed on the same samples, final rinsing with methylene chloride is acceptable.

Sample size requirements can vary with tissue type (e.g., liver or muscle) and detection limit requirements. In general, a minimum sample size of 6 g (wet weight) is required for the analysis of all priority pollutant metals. To allow for duplicates, spikes, and required reanalysis, a sample size of 50 g (wet weight) is recommended. Samples can be stored in glass, TFE, or high-strength polyethylene jars.

Processing--Samples should be frozen after resection and kept at -20° C. Although specific holding times have not been recommended by U.S. EPA a maximum holding time of 6 mo (except for mercury samples, which should be held a maximum of 28 days) would be consistent with that for water samples.

When a sample is thawed, the associated liquid should be maintained as a part of the sample. This liquid will contain lipid material. To avoid loss of moisture from the sample, partially thawed samples should be homogenized. Homogenizers used to grind the tissue should have tantalum or titanium parts rather than stainless steel parts. Stainless steel blades used during homogenization have been found to be a source of nickel and chromium contamination.

Laboratory Procedures--

Analytical Procedures--Priority pollutant metals should be analyzed according to the procedures described in Tetra Tech (1986b). Digest the homogenized sample prior to analysis, using the acids specified in the procedure. The digestate can then be analyzed by flame Atomic Absorption Spectrophotometry (AAS), graphite furnace AAS, or Inductively Coupled Plasma (ICP), depending on the sample concentration and required detection limits. ICP can be used to screen samples for elements that are present in relatively high concentrations. Most elements will require more sensitive analysis by graphite furnace AAS. Mercury analysis must be performed by cold vapor AAS.

Calibration and Preventive Maintenance--Because contamination can be the limiting factor for reliable quantitation of trace metals in tissue, several field and method blanks should be analyzed to establish contamination variability. At least three blanks, or a blank every 20 samples, should be collected at each step of sample preparation to evaluate contamination variability. The minimum blanks to analyze are:

- Bottle blanks Bottles should be opened and rinsed with concentrated HNO_3. The HNO_3 rinse should be digested and analyzed with each batch of samples

- Resection blanks - After routinely cleaning the utensils used for dissecting and before resecting the next sample, the utensils that have contacted the tissue to be analyzed should be rinsed with metal-free water. A rinsate should be collected and the volume recorded. This rinsate blank should be analyzed at least once and preferably one blank with each batch of samples. The total micrograms of each element in the rinsate should be recorded. This blank will allow evaluation of the cleaning technique and provide correction values if necessary.

- Digestion (or method) blanks - Blanks containing the same quantity of acid as each sample should be digested and analyzed with each batch of samples.

Preliminary blanks and samples should be analyzed prior to resecting and analyzing the tissue samples to ensure that the blank concentrations and variability are low enough to establish adequate assessment of tissue concentrations. Blanks should continue to be analyzed with each batch of samples to monitor sporadic contamination.

All analytical instruments must be calibrated daily and each time the instrument is set up. Calibration procedures should follow those for

the specified method for each analysis. Calibration standards must be prepared using the same concentrations of acids as those which will result in the samples following sample preparations.

After an instrument has been calibrated, the accuracy of the initial calibration should be verified by the analysis of certified control solutions at a frequency of 5 percent or every 2 h during an analysis run, whichever is more frequent, and after running the last analytical sample. If a certified control solution is not available, a standard should be used. Analyte for the standard should be from a different source than that used in the standards for the initial calibration. If the deviation of the continuing calibration verification is greater than the calibration control limits specified in the method, the instrument must be recalibrated, and the preceding 10 samples reanalyzed.

All equipment should have scheduled routine preventive maintenance, and a record of all maintenance performed should be noted in a logbook. Critical spare parts should be kept on hand.

Quality Control Checks--Analyze appropriate standard reference materials (SRM) if available (e.g., U.S. EPA Trace Metals in Fish Tissue, NBS Oyster Tissue, or, if analyzing fish liver, NBS Bovine Liver) to provide a check on contamination, digestion efficiency, and overall accuracy of the analysis. A minimum of one SRM should be analyzed for each survey or 2 percent of the total number of samples (i.e., 1 per 50 samples), whichever is more frequent).

To estimate precision, a minimum of 5 percent of the total number of samples should be analyzed in duplicate or one for each survey, whichever is more frequent. When more than 20 samples are to be analyzed for one survey, the project manager may choose to implement a program of triplicate analyses. The overall percentage of replicates should be at least 5 percent. Analyze samples spiked before digestion at the same frequency as duplicates to estimate recovery. Add spike concentrations approximately equal to

the concentration found in the unspiked sample. An acceptable range in spike concentrations is 0.5 to 5 times the sample concentrations. Limited sample size may necessitate reduction in the number of QC samples for bioaccumulation monitoring.

The blanks listed under Calibration Procedures and Preventive Maintenance should be carried through all the appropriate steps. Ideally, the concentrations of the bottle blanks, dissection blanks, and digestion blanks are less than the detection limit and no correction of sample results is performed. If there is extensive contamination of blanks (>30 percent of sample value) and if there is enough sample, the batch of samples associated with the blank should be reanalyzed. The data should be corrected by the data users for the blank values between the required detection limit and the control limit.

For ICP analysis, additional QC checks should include an interference check sample to verify interelement and background correction factors. For graphite furnace AAS, additional QC checks should include duplicate injections with the mean value reported. The relative standard deviation of the readings should be within control limits, or the sample should be rerun. If the predigestion spike recovery is poor, the digestate should be spiked and results compared to the predigestion spike results. If the digestate spike recovery is as poor as the predigestion recovery, the method of standard additions should be used to determine digestate concentrations.

Corrective Action--If the concentration of the field or method blank is greater than the required detection limit, then all steps in the sample handling should be reviewed. Many trace metal contamination problems are due to airborne dust. Thorough cleaning of all utensils between processing each sample is important to minimize cross-contamination. High zinc blanks may be due to airborne dust or galvanized iron, while high chromium and nickel blanks indicate contamination from stainless steel. In the field, the use of mercury-filled thermometers should be avoided. Broken thermometers can be a potential source of severe mercury contamination. In the laboratory,

samples for mercury analysis should be isolated from items such as polarographs or COD reagents.

Poor replication may be caused by inadequate mixing of the sample before taking aliquots, inconsistent contamination, inconsistent digestion procedures, or instrumentation problems.

Poor performance on the analysis of the Standard Reference Material (SRM) or poor spike recovery may be caused for the same reasons as poor duplication. However, if duplicate results are acceptable, then poor SRM performance or poor spike recovery may be caused by loss of analyte during digestion or sample matrix interferences during analysis. To check for analyte loss during digestion or for low recovery due to interferences during analysis, spike the sample after digestion and compare the analysis to the predigestion spike. If the results are different, then the digestion technique should be adjusted. If the results are the same, then dilute the sample by at least a factor of five and reanalyze. If spike recovery is still poor, then the method of standard additions, a matrix modifier, or another method is required.

Sediment on the outside of shellfish may contaminate the tissue to be analyzed. Proper cleaning of the outside of the animal is critical.

Data Quality and Reporting--Measurements should be reported as ug/kg to a maximum of three significant figures on a wet-weight basis. Detection limits can vary widely because of methods and instrumentation. The analytical method should be consulted to determine expected detection limits, precision, and accuracy. Further guidance on analytical detection limits can be found Tetra Tech (1985b).

The data report should include duplicate, spike, and blank results. Data should not be blank-corrected. In addition, the laboratory data summary should include:

- Digestion procedures
- Quantity of sample digested and final dilution volume
- Instrument detection limit for each element
- Blank associated with sample
- Deviation from the prescribed methods
- Problems associated with analysis.

For a more thorough QA review, additional documentation (e.g., calibration curves) may be requested.

Priority Pollutant Organic Compounds

Field Procedures--

Collection--In the field, sources of contamination include sampling gear, grease from winches or cables, engine exhaust, dust, and ice used for cooling. Efforts should be made to minimize handling and to avoid sources of contamination. This will usually require resection of tissue to be performed in a controlled environment (e.g., laboratory). For example to avoid contamination from ice, the samples should be wrapped in aluminimum foil, placed in watertight plastic bags and immediately iced. Organisms should not be frozen prior to resection if analyses will be conducted only on selected tissues because freezing may cause internal organs to rupture and contaminate other tissue. If organisms are eviscerated on board the survey vessel, the remaining tissue (e.g., muscle) may be wrapped as described above and frozen. Limited sample size can be a problem when using small organisms, but an attempt should be made to collect at least 30 g of tissue for each organic priority pollutant analysis. Additional sample (30 g) is needed for each spike, duplicate, reanalysis, and archive sample.

Processing--To avoid cross-contamination, all equipment used in sample handling should be thoroughly cleaned before each sample is processed. All instruments must be of a material that can be easily cleaned (e.g., stainless steel, anodized aluminum, or borosilicate glass). Before the next sample is processed, instruments should be washed with a detergent solution, rinsed with tap water, soaked in high-purity methylene chloride, and finally rinsed with reagent water. Work surfaces should be cleaned with 95-percent ethanol, and allowed to dry completely. If metals are to be analyzed, instruments may be washed with acid prior to the methylene-chloride rinse. Each fish, crab, and mollusc should be handled with clean stainless steel or quartz instruments (except for external surfaces). The specimens should come into contact with precleaned glass surfaces only. Polypropylene and polyethylene surfaces are a potential source of contamination and should not be used. To control contamination when dissecting tissue,

separate sets of utensils should be used for removing outer tissue and for dissecting tissue for analysis. For fish samples, special care must be taken to avoid contaminating target tissues (especially muscle) with slime and/or adhering sediment from the fish exterior (skin) during resection. The incision "troughs" are subject to such contamination. Thus, they should not be included in the sample. In the case of muscle, a "core" of tissue is taken from within the area boarded by the incision troughs, without contacting them. Unless specifically sought as a sample, the dark muscle tissue that may exist in the vicinity of the lateral line hould not be mixed with the light muscle tissue that constitutes the rest o the muscle tissue mass.

The resected tissue sample should be placed in a clean glass or TFE container that has been washed with detergent, rinsed twice with tap water, rinsed once with distilled water, rinsed with acetone, and, finally, rinsed with high-purity methylene chloride. Firing of the glass jar for 1 h at 450° C may be substituted for the final solvent rinse, but precautions must be taken to avoid contamination as the container is cooled after drying. Methylene-chloride rinses should be avoided for all containers used for volatile analysis. Heating containers at >105° C may be substituted for the solvent rinse if only volatile organics are to be analyzed.

The U.S. EPA and other federal agencies (e.g., National Bureau of Standards) have not yet provided specific guidance regarding holding times and temperatures for tissue samples to be analyzed for semi-volatile organic compounds. Until U.S. EPA develops definitive guidance, the following holding conditions should be observed. Resected tissue samples should be maintained at -20° C and extracted as soon as possible, but within 10 days of sample receipt. Complete analyses should be performed within 40 days.

When possible, the entire sample should be used for analysis. There are several acceptable methods of homogenization of a thawed tissue sample. If a micro-grinder (e.g., a Tissuemizer) is used, care must be taken to

ensure that it is thoroughly cleaned between each use. This usually entails disassembly of the unit. A scapel can be used to cut the tissue into small pieces. The method chosen will depend upon sample size, time, and resources available. Devices with large surface areas (i.e., blenders, meat grinders) should be avoided, as they are difficult to clean and a small sample is difficult to remove after grinding.

Laboratory Procedures--

Analytical Procedures--Priority pollutant organic compounds should be analyzed according to the procedures described in Tetra Tech (1986b). Preparation of the tissue will depend upon sample size, extraction method, and sample type (fish muscle, whole organism, or composite). Avoid use of plastic or rubber equipment that may come in contact with the sample, as these can be a source of contamination.

A modified U.S. EPA Method 624 (Hiatt 1981) produces adequate spike recoveries and detection limits for volatile compounds. Analysis of the semi-volatile organic compounds involves a solvent extraction and one or more cleanup procedures.

A Soxhlet extraction with at least a gel permeation column cleanup provides efficient extraction of organic compounds of interest and eliminates many interfering coextracted materials.

Cross-contamination should be avoided during all steps of analysis. All glassware should be clean. Injection micro-syringes must be cleaned well between uses. If separate syringes are used for injection of standard solutions, bias between syringes should be accounted. Carryovers can occur when high- and low-level samples are analyzed sequentially. Analysis of an appropriate solvent blank following a high-level sample may be necessary to check for carryover.

Recommended detection limits are based on a minimum 20-g wet-weight sample size with an additional 10 g (wet weight) required for a separate analysis of volatile compounds. For most of the volatile organic compounds, detection limits between 5 and 10 ug/kg wet weight are recommended. Detection limits of 10 ug/kg (wet weight) are recommended for aromatic hydrocarbons and phthalates analyzed by GC/MS. Detection limits of 10-20 ug/kg (wet weight) are recommended for chlorinated hydrocarbons and halogenated ethers analyzed by GC/MS. Detection limits of 50 ug/kg (wet weight) are recommended for pesticides analyzed by GC/MS. A detection limit of 20 ug/kg (wet weight) is recommended for PCBs analyzed by GC/EC. If pesticides are analyzed by GC/EC, a detection limit in the range of 0.1-5 ug/kg (wet weight) is recommended (Tetra Tech 1985b).

Actual attainable detection limits will vary with sample size, cleanup, extraction method, final volume, and amount and nature of any co-extractive compounds.

Calibration and Preventive Maintenance--Before beginning analysis of samples, a calibration curve bracketing the working range must be established. This calibration should be repeated after all major equipment disruptions. Calibration checks of the GC/MS system at the beginning of the day and at least every 12 h will establish that the instrument's response is in control. Specific tuning criteria (e.g., DFTPP, BFB) are given in each method. Calibration checks of the GC/ECD system should be done at the beginning of the day and verified at least every 6 h. These are only recommended minimum frequencies and the nature of the samples may necessitate more frequent verification.

A routine QC check for each lot of analytical reagents used in extraction can monitor a potentially serious source of contamination. Also, each lot of alumina, silica gel, sodium sulfate, or Florasil used in extract cleanup should be tested and cleaned as necessary. Any resins or charcoals used should also be monitored. Surrogate mixtures have also been found to contain impurities and should be verified prior to use. The fatty acid

content of many tissue samples may overload the cleanup columns. The columns should be calibrated and monitored to enable the compounds of interest to be consistently collected in the proper fraction.

Equipment should be maintained and serviced routinely according to manufacturer's instructions and good laboratory practices. Logbook records should be kept to document maintenance for each measurement device.

Total Extractable Lipids--The amount of tissue extract required to determine total extractable lipid content will depend upon the sensitivity of the balance used and the amount of lipid in the organism. A maximum of 1/200 of the original extract from 20 g of tissue should be sufficient for this determination. Ideally, using an electrobalance able to measure to 0.1 ug, 1/10,000 of a 20-g extract is more than sufficient. A volume should be used so as to measure approximately 50 times the smallest unit measured by the balance. If a large percentage of the extract is used for lipid determination (e.g., >1/200), the results of further analyses on the remaining extract should be adjusted accordingly for this loss of material.

Quality Control Checks--To monitor precision and accuracy, duplicate and matrix spike analyses should be performed. A frequency of 5 percent of each or one each per survey, whichever is more frequent, is the recommended minimum. When more than 20 samples are to be analyzed for one survey, the project manager may choose to implement a program of triplicate analyses. The overall percentage of replicates should be at least 5 percent. Method interferences can be caused by contaminated glassware, reagents, solvents, or processing hardware. These materials can be monitored for contamination by processing of 5-percent method blanks, or one per batch, whichever is more frequent. Addition of known amounts of surrogate compounds to each sample before purging or extraction will serve to monitor preparation and analysis of samples. An empty tissue jar processed, handled, and stored as a sample should serve as a field blank. As another measure of accuracy, a standard reference material should be analyzed if available. One for

each survey or 2 percent of the total number of samples, whichever is more frequent is the recommended minimum.

Corrective Action--When results of QC samples fall outside of established limits, several courses of action are available. Contamination in the lab reagent blank is cause for all positive findings of the same compound in associated samples to be suspect. If contamination is extensive, reanalysis of the whole associated group of samples may be in order. Blank contamination should be kept to less than 10 percent of the sample values and, preferably, below the detection limit. Contamination found in the field blank should also be considered when looking at associated sample data. Extensive contamination of a lab or field blank (>30 percent of sample value) should lead to a detailed review of laboratory, sampling, transport, and storage procedures. Phthalates, methylene chloride, and toluene are common laboratory contaminants that may be detected in blanks above the method detection limit.

Poor duplication may be caused by inadequate mixing of the sample before removing aliquots, inconsistent contamination, inconsistent extraction procedures, or instrument problems. Further replication of an analysis may be necessary to determine the reason for the poor results.

Poor spike recovery may be caused for the same reasons as poor duplication, or by matrix effects produced by co-extracted materials. If the spiked compound is added at a concentration much less than that found in the sample, recovery may be difficult to determine. This problem is difficult to avoid, as most environmental samples contain unknown concentrations of organic compounds. To check if the analyte is being lost somewhere during the processing, a step-by-step examination of the method using a spiked blank is necessary, with measurements of the analyte at each step.

Emulsions, colored extracts, or unusual chemical behavior of a sample should be noted and considered when reviewing results. Modification of a method by an experienced chemist may alleviate some problems (e.g., substi-

tuting ethyl ether for the usual solvent can sometimes help emulsions with tissue samples). All deviations from specified methods should be documented in logbooks and discussed in the data report.

Results that fall outside the established calibration curve are suspect until linearity of response can be shown at that concentration or until the extract is diluted appropriately and reanalyzed. Extreme values may necessitate re-extraction of a smaller sample size. Extremely high concentrations of organic compounds may saturate the extraction capabilities of the method and may necessitate re-extraction of a smaller sample size or use of a more appropriate method. Chromatographic interference by natural substances present in the tissue (e.g., fatty acids) may require additional cleanup.

Data Quality and Reporting--A data summary for each sample should be submitted. All data should be reported as ug/kg wet weight to a minimum of two significant figures. Data should not be blank-corrected. Spike and surrogate recoveries, relative percent difference between duplicates, and blank results (ng/sample) should also be submitted. The following additional information is needed for each sample to allow independent QA review:

- Sample weight extracted
- Final volume of extract
- Amount of extract injected
- Instrument detection limits
- Detection limit for each compound
- Blank associated with the sample

- Deviations from the prescribed method

- Problems associated with analysis.

For a more thorough QA review, additional documentation (e.g., chromatograms, computer listings) may be requested.

Demersal Fishes and Large Macroinvertebrates

Field Procedures--

Collection--After the trawl assembly has been brought on board, the cod-end choker can be released and the catch emptied into some kind of collection vessel (e.g., tub, tray, bucket, special table). It is recommended that a collection vessel be used to prevent organisms from escaping and to prevent possible contamination of tissue-contaminant specimens by exposure to the deck surface.

If organisms from the trawl catch are to be subsampled for tissue contaminant analyses, these individuals should be noted and removed from the sample before the remainder is processed for ecological information. Care should be taken to minimize potential contamination of these specimens. For example, the deck and all collection containers or equipment should be washed before and after each haul. Smoking should not be allowed during sampling and all crew members should wear clean gloves when handling the organisms. It is also helpful if the skipper positions the vessel so that stack gases move away from the fantail. Additional precautions are given in the bioaccumulation sections of this document that describe the detailed collection methods to be used for specific kinds of tissue analyses.

Processing--Once tissue-contaminant specimens are removed, the remainder of the catch can be processed without concern for contamination. All organisms should be identified and counted. Identifications should be to the species level, if possible. It is advisable to have a collection of taxonomic keys to local fauna on board the sampling vessel. For fishes, scientific and common names should conform to those recommended by Robins et al. (1980). If the identity of a species is in doubt, several representative specimens should be frozen or fixed with 10-percent buffered formalin and identified by an expert after the cruise.

Following identification, the size of each individual should be measured. For fishes, it is recommended that total length (TL) be determined to the nearest millimeter (mm). Total length is the length from the anterior-most part of the fish to the tip of the longest caudal fin rays. Two kinds of total length can be measured (Anderson and Gutreuter 1983). Maximum TL is determined when the lobes of the caudal fin are compressed dorso-ventrally, whereas natural TL is measured when the caudal fin is in its natural state. To be consistent with the convention used by most fishery investigations in the U.S., maximum TL should be measured (Anderson and Gutreuter 1983).

For fishes that occur in relatively large numbers, individuals may be classified into size classes rather than measured exactly. This procedure can reduce processing time considerably. If size classes are used, it is recommended that they differ by no more than 1 cm each. Furthermore, it is recommended that each size class be measured from one half-cm value to the next. For example, a 10-cm size would include fish from 9.50 to 10.49 cm.

In some cases, erosion of the caudal fin in a substantial segment of a population may require that a measurement other than total length be used for affected individuals. If this occurs, it is recommended that maximum standard length (SL) be used as a substitute. Standard length is the length from the anterior-most part of the fish to the posterior end of the hypural bone. Anderson and Gutreuter (1983) state that in practice, SL may be measured to some external feature such as the last lateral line scale, the end of the fleshy caudal peduncle, or the midline of a crease that forms when the tail is bent sharply. Standard length can be related to total length by developing a regression relationship between these two measures for a sample that covers the complete length range observed in the population.

As each individual is measured, it should also be scanned carefully for grossly visible external abnormalities. Some common external abnormalities

found in fishes captured in polluted areas are listed in Table 7. Recent literature regarding this subject is reviewed by Sindermann (1979). At least one person on board the sampling vessel should be capable of diagnosing the abnormalities listed in Table 7. If there is any doubt as to the identity of an abnormality, then one, or preferably several, specimens afflicted with the disorder should be frozen or fixed with 10-percent buffered formalin and taken to an expert for accurate diagnosis. Once disorders have been confirmed, it is helpful to maintaizn reference specimens on the sampling vessel or in a shore-based laboratory.

Perhaps the most frequent error associated with recognizing external abnormalities is mistaking net-related damage as integumental lesions. This problem occurs most frequently when diagnosing ulcers and fin erosion. Net-related damage can result from surface abrasion as captured fishes are dragged along the bottom in the cod end or as fishes swim against the net in an attempt to escape. Net-related damage can also result from captured fishes biting each other. Whenever a suspected lesion appears to be newly formed or is actively bleeding, net-related damage should be suspected.

Laboratory Procedures--

There are no laboratory procedures for demersal fishes and megainvertebrates, as all processing will occur in the field.

TABLE 7. SOME COMMON EXTERNAL ABNORMALITIES OBSERVED IN FISHES FROM POLLUTED AREAS

Integumental Lesions
Fin erosion (fin rot)
Lymphocystis
Ulcers
Neoplasms (tumors)
Skeletal Malformations
Scoliosis
Lordosis
Cranial compression (pugheadedness)
Dwarfism
Deformed fin rays (bent fins)
Pigmentation Anomalies
Ambicoloration
Parasites
Copepods
Isopods
Nematodes
Leeches

REFERENCES

Anderson, R.O., and S.J. Gutreuter 1983. Length, weight, and associated structural indices. pp. 283-300. In: Fisheries Techniques. L.A. Nielsen and D.L. Johnson (eds). American Fisheries Society, Bethesda, MD.

Birkett, L., and A.D. McIntyre. 1971. Treatment and sorting samples. pp. 156-168. In: Methods for Study of Marine Benthos. N.A. Holme and A.D. McIntyre (eds). IBP Handbook No. 16. Blackwell Scientific Publications, Oxford, UK.

Bordner, R., J. Winter, and P. Scarpino. 1978. Microbiological methods for monitoring the environment: water and wastes. EPA-600/8-78-017. Environmental Monitoring and Support Laboratory, U.S. Environmental Protection Agency, Cincinnati, OH. 337 pp.

Buchanan, J.B., and J.M. Kain. 1971. Measurement of the physical and chemical environment. pp. 30-52. In: Methods for the Study of Marine Benthos. N.A. Holme and A.D. McIntyre (eds). IBP Handbook No. 16. Blackwell Scientific Publications, Oxford, UK.

Disalvo, L., H.E. Guard, and N.D. Hirsch. 1977. Assessment and significance of sediment associated oil and grease in aquatic environments. Technical Report D-77-26. Naval Biosciences Laboratory, Naval Supply Center, Oakland, CA. 145 pp.

Elliott, J.M. 1971. Some methods for the statistical analysis of samples of benthic invertebrates. Scientific Publication No. 25. Freshwater Biological Association, Ferry House, UK. 148 pp.

Fauchald, K. 1977. The polychaete worms; definitions and keys to the orders, families, and genera. Science Series 28. Natural History Museum of Los Angeles County. Los Angeles, CA. 188 pp.

Folk, R.L. 1968. Petrology of sedimentary rocks. University of Texas, Austin, TX. 172 pp.

Gibbs, P.J., and J. Mathews. 1982. Analysis of experimental trawling using a miniature otter trawl to sample demersal fish in shallow estuarine waters. Fish. Res. 1:235-249.

Gonor, J.J., and P.F. Kemp. 1978. Procedures for quantitative ecological assessments in intertidal environments. EPA-600/3-78-078. U.S. Environmental Protection Agency, Corvallis, OR. 104 pp.

Gosner, K.L. 1971. Guide to identification of marine and estuarine invertebrates. Wiley-Interscience, New York, NY. 693 pp.

Green, E., D. Schnitker. 1974. The direct titration of water-soluble sulfide in estuarine muds of Montsweag Bay, Maine. Mar. Chem. 2:111-124.

Greenberg, A.E., R. Trusseil, and L. S. Clersceri (eds). 1985. Standard methods for examination of waste and wastewater. American Public Health Association, Washington, DC. 1268 pp.

Hiatt, M.H. 1981. Analysis of fish and sediment for volatile priority pollutants. Anal. Chem. 53:1541-1543.

Hinricks, D.J. 1979. Inspector's guide: to be used in the evaluation of municipal wastewater treatment plants. Prepared for Municipal Operations Branch, Office of Water Program Operations, U.S. Environmental Protection Agency, Washington, DC.

Holme, N.A. 1971. Macroinfauna sampling. pp. 80-130. In: Methods for Study of Marine Benthos. N.A. Holme and A.D. McIntyre (eds). IBP Handbook No. 16. Blackwell Scientific Publications, Oxford, UK.

Howmiller, R.P. 197 . Effects of preservatives on weights of some common macrobenthic invertebrates. Trans Am. Fish Soc. 4:743-746.

Kitchens, J.F., R.E. Casner, G.S. Edwards, W.E. Harward III, and B.J. Macri. 1976. Investigation of selected potential environmental contaminants: formaldehyde. EPA-560/2-76-009. U.S. Environmental Protection Agency, Washington, DC.

Lappalainen, A., and P. Kangas. 1975. Littoral benthos of the northern Baltic Sea. II. Interrelationships of wet, dry, and ash-free weights of macroinfauna in the Tvarminne area. Int. Rev. Gesamten. Hydrobiol. 60:297-312.

Mearns, A.J., and J.M. Allen. 1978. Use of small otter trawls in coastal biological surveys. EPA-600/3-78-083. U.S. Environmental Protection Agency, Corvallis, OR. 33 pp.

Metcalf & Eddy, Inc. 1979. Wastewater engineering: treatment/disposal/reuse, Second Edition. McGraw Hill Book Company, New York, NY. 920 pp.

Mills, E.L., K. Pittman, and B. Munroe. 1982. Effect of preservation on the weight of marine benthic invertebrates. Can. J. Fish. Aquat. Sci. 39:221-224.

Plumb, R.H., Jr. 1981. Procedures for handling and chemical analysis of sediment and water samples. Technical Report EPA/CE-81-1. U.S. Environmental Protection Agency/U.S. Corps of Engineers Technical Committee on Criteria for Dredged and Fill Material, U.S. Army Waterways Experiment Station, Vicksburg, MS. 471 pp.

Robins, C.R., R.M. Bailey, C.E. Bond, J.R. Brooker, E.A. Lachner, R.N. Lea, and W.B. Scott. 1980. A list of common and scientific names of fishes from the United States and Canada. Special Publication No. 12. American Fisheries Society, Bethesda, MD. 174 pp.

Schwinghamer, P. 1981. Characteristic size distributions of integral benthic communities. Can. J. Fish. Aquat. Sci. 38:1255-1263.

Shepard, F.P. 1954. Nomenclature based on sand-silt-clay ratios. J. Sediment. Petrol. 24:151-158.

Shepard, F.P. 1963. Submarine geology. (Second edition). Harper and Row, Publishers. New York, NY. 557 pp.

Sindermann, C.J. 1979. Pollution-associated diseases and abnormalities of fish and shellfish: a review. Fishery Bull. 76:717-749.

Smith, R.I., and J.T. Carlton (eds). 1975. Light's manual: intertidal invertebrates of the central California coast. University of California Press, Berkeley, CA. 716 pp.

Stephenson, M.D., M. Martin, S.E. Lange, A.R. Flegal, and J.H. Martin. 1979. California mussel watch 1977-1978. Volume II: Trace metals concentrations in the California mussel, Mytilus californianus. SWRCB Water Quality Monitoring Report No. 79-22. Sacramento, CA. 110 pp.

Stephenson, M.D., S.L. Coals, M. Martin, and J.H. Martin. 1980. California state mussel watch 1979-1980. Trace metal concentrations in the California mussel, Mytilus californianus, and the bay mussel, Mytilys edulis, along the California coast and selected harbors and bays. SWRCB Water Quality Monitoring Report 80-8. Sacramento, CA. 95 pp.

Stofan, P.E., and G.C. Grant. 1978. Phytoplankton sampling in quantitative baseline and monitoring programs. EPA-600/3-78-025. U.S. Environmental Protection Agency, Corvallis, OR. 27 pp.

Strickland, J.D.H., and T.R. Parsons. 1972. A practical handbook of seawater analysis. Bulletin No. 167. Fisheries Research Board of Canada, Ottawa, Canada. 310 pp.

Striplin, P.L., and S.H. Maupin. 1982. Custom-designed sieving stations for small research vessels. Task report to the U.S. Environmental Protection Agency. Corvallis, OR.

Swartz, R.C. 1978. Techniques for sampling and analyzing the marine macrobenthos. EPA-600/3-78-030. U.S. Environmental Protection Agency, Corvallis, OR. 27 pp.

Tetra Tech. 1982. Design of 301(h) monitoring programs for municipal wastewater discharges to marine waters. EPA 430/9-82-010. Office of Water Program Operations, U.S. Environmental Protection Agency, Washington, DC. 135 pp.

Tetra Tech. 1985a. Bioaccumulation monitoring guidance: 2. selection of target species and review of available bioaccumulation data. Final program document prepared for the Marine Operations Division, Office of Marine and Estuarine Protection, U.S. Environmental Protection Agency. EPA Contract No. 68-01-6938. Tetra Tech, Inc., Bellevue, WA. 52 pp. + appendices.

Tetra Tech. 1985b. Bioaccumulation monitoring guidance: 3. recommended analytical detection limits. Final program document prepared for the Marine Operations Division, Office of Marine and Estuarine Protection, U.S. Environmental Protection Agency, Washington, DC. EPA Contract No. 68-01-6938. Tetra Tech, Inc., Bellevue, WA. 23 pp.

Tetra Tech. 1985c. Summary of U.S. EPA-approved methods, standard methods, and other guidance for 301(h) monitoring variables. Final program document prepared for the Marine Operations Division, Office of Marine and Estuarine Protection, U.S. Environmental Protection Agency. EPA Contract No. 68-01-6938. Tetra Tech, Inc., Bellevue, WA. 18 pp.

Tetra Tech. 1986a. Analytical methods for EPA priority pollutants and 301(h) pesticides in estuarine and marine sediments. Final program document prepared for the Marine Operations Division, Office of Marine and Estuarine Protection, U.S. Environmental Protection Agency. EPA Contract No. 68-01-6938. Tetra Tech, Inc., Bellevue, WA.

Tetra Tech. 1986b. Bioaccumulation monitoring guidance: [illegible] analytical methods for U.S. EPA priority pollutants and 301(h) pesticides in tissues from estuarine and marine organisms. Final report prepared for Marine Operations Division, Office of Marine and Estuarine Protection, U.S. Environmental Protection Agency. EPA Contract No. 68-01-6938. Tetra Tech, Inc., Bellevue, WA.

Tetra Tech. 1986c. Evaluation of coastal survey positioning methods for nearshore marine and estuarine waters. Final report prepared for Marine Operations Division, Office of Marine and Estuarine Protection, U.S. Environmental Protection Agency. EPA Contract No. 68-01-6938. Tetra Tech, Inc., Bellevue, WA. 54 pp. + appendices.

Tetra Tech and American Management Systems. 1985. ODES data submissions manual. Prepared for U.S. EPA by Tetra Tech, Bellevue, WA and American Management Systems, Washington, DC.

U.S. Department of Transportation. 1984. Hazardous materials regulations. U.S. DOT, Washington, DC. Federal Register, Vol. 49, Chapter 1, Subchapter C, pp. 52-792.

U.S. Environmental Protection Agency. 1977. NPDES compliance sampling manual. Enforcement Division, Office of Water Enforcement Compliance Branch, Washington, DC. 139 pp.

U.S. Environmental Protection Agency. 1978 (revised 1983). NEIC policies and procedures. EPA-330/9-78-001-R. National Enforcement Investigations Center, Denver, CO.

U.S. Environmental Protection Agency. 1979a. Handbook for analytical quality control in water and wastewater laboratories. National Environmental Research Center, Cincinnati, OH.

U.S. Environmental Protection Agency. 1979b (revised March, 1983). Methods for chemical analysis of water and wastes. EPA 600/4-79-020. Environmental Monitoring and Support Laboratory, Cincinnati, OH.

U.S. Environmental Protection Agency. 1980. Interim guidelines and specifications for preparing quality assurance project plans. Office of Monitoring Systems and Quality Assurance, Washington DC. 18 pp.

U.S. Environmental Protection Agency. 1982. Handbook for sampling and sample preservation of water and wastewater. EPA-600/4-82-029. Environmental Monitoring and Support Laboratory, Cincinnati, OH. 402 pp.

U.S. Environmental Protection Agency. 1983a. Environmental measurement method performance data for establishing achievable data quality goals. Environmental Monitoring Systems Laboratory, Research Triangle Park, NC.

U.S. Environmental Protection Agency. 1983b. Guidance for preparation of combined work/quality assurance project plans for water monitoring. Office of Water Regulations and Standards, Washington, DC. 33 pp.

U.S. Environmental Protection Agency. 1984. Guidelines establishing test procedures for the analysis of pollutants. U.S. EPA, Washington, DC. Federal Register, Vol. 49, No. 209, pp. 43234-43436.

U.S. Environmental Protection Agency. 1985. U.S. EPA Contract Laboratory Program - statement of work for inorganic analyses, multi-media multi-concentration. U.S. EPA, Washington, DC.

U.S. Navy. 1968. Instruction manual for obtaining oceanographic data. Publication No. 607. U.S. Naval Oceanographic Office, Washington, DC.

Wiederholm, T., and L. Eriksson. 1977. Effects of alcohol preservation on the weights of some benthic invertebrates. Zoon 5:29-31.

Word, J.Q. 13 February 1985. Personal Communication (discussion with Dr. Gordon R. Bilyard). Evans-Hamilton, Inc., Seattle, WA.

GLOSSARY

a+b - Notation for acid and alkali solutions. In additive volumes (a+b), the first number, a, refers to the volume of a concentrated reagent; the second number, b, refers to the volume of distilled water required for dilution.

Accuracy - The closeness of a measured or computed value to its true value.

Aliquot - A divisor that divides a sample into a number of equal parts, leaving no remainder; a sample resulting from such a divisor.

Ambient - Surrounding, encircling.

Analyte - The specific component measured in a chemical analysis.

APHA - American Public Health Association.

Apparent Particle Size Distribution - Distribution comprised of both the inorganic and organic particles in a sample (i.e., organic material is not oxidized).

Archive - A repository of evidence or information.

Asymptote - A line considered a limit to a curve in the sense that the perpendicular distance from a moving point on the curve to the line approaches zero as the point moves an infinite distance from the origin.

Auto-Injection - An automated introduction of a sample into an instrument for analysis. Usually used for extracts analyzed by gas chromatography.

Background Correction Factor - A number that adjusts the analyte signal for interfering matrix effects in flame and graphite furnace AA analysis (usually done automatically by the instrument itself through the use of continuous deuterium lamp).

Bacteriostasis - The arrestment or inhibition of bacterial growth and reproduction.

Batch - Usually refers to the number of samples that can be prepared or analyzed at one time. A typical batch size is 20 for extraction of organic compounds.

Benthic - That portion of the marine environment inhabited by organisms that live permanently in or on the bottom.

Bioaccumulation - The accumulation of chemical substances in the tissues of organisms.

Biomass - The weight of living material in all or part of an organism, population, or community. Commonly expressed as weight per unit area, a biomass density.

Blank-Corrected - The concentration of an analyte adjusted for the concentration of that analyte in the blank.

Bow Wake - The pressure wave that forms below a solid object as it is lowered through the water column.

Bridle - The line that links each otter board with the hydrowire.

Calibration - The systematic standardization of the graduations of the quantitative measuring instrument.

Carryover - Contamination arising from previous analysis or extraction of a standard or highly contaminated sample.

Chain-of-Custody - The procedures and forms used to trace and record environmental samples through all stages of collection, shipping, analysis, and final disposition.

Chelation - The addition of organic complexing agents, such as EDTA (ethylenediaminetetraacetic acid) that preferentially bind with metals, thereby reducing the exposure and possible toxicity to organisms (e.g., bacteria).

Chief Scientist - The person in charge of the sampling team on a research vessel.

Cleanup - The removal of co-extracted compounds that may cause interference from a sample extract.

Cod End - The mesh bag at the back of an otter trawl in which the catch is collected. It is often of smaller mesh size than the remainder of the net.

Coefficient of Variation - The standard deviation expressed as a percentage of the mean.

Co-Extractive - Materials other than analytes of interest that are extracted along with the analytes. These can be sources of interference.

Composite Sample - A sample composed of two or more grab samples or increments.

Contingency Plans - Procedures to be followed when those that were planned originally cannot be carried out.

Copenhagen Seawater - Seawater of known chlorinity, an international standard for salinity determinations.

Corrective Action - Measures taken to remove, adjust, remedy, or counteract a malfunction or error so that a standard or required condition is met.

Cross-Contamination - Contamination of a sample or sample extract from exposure to another sample or sample extract, usually of higher concentration.

Demersal - Living on or near the bottom of the sea.

Desiccation - The thorough drying of a sample by removal of moisture.

Detection Limit - The smallest concentration of some component of interest that can be measured by a single measurement with a stated level of confidence.

Digestion - In preparing samples for analysis of metals, an acidic solution added to break organometallic bonds, freeing the metals for analysis by atomic absorption or atomic emission spectrophotometry.

Distillation - The vaporization of a liquid mixture with subsequent collection of components by differential cooling to condensation.

Duplicate Analysis - A second analysis made on the same (or identical) sample of material to assist in the evaluation of measurement variance.

Effluent - Something that flows out. For example, the liquid material discharged by sewage treatment plants.

Electrolyte - A substance that dissociates into ions in solution or when fused, thereby becoming electrically conducting.

Emulsion - A suspension of small globules of one liquid in a second liquid with which the first will not mix.

Epibenthic - Residing primarily on the sediment surface.

Equilibrium - The state of a reaction in which its forward and reverse reactions occur at equal rates so that the concentration of the reactants does not change with time.

Extraction - A method of separation in which a solid or solution is contacted with a liquid solvent to transfer one or more component into the solvent.

False Positive - A positive measurement of an analyte, not attributable to the sample.

Field Blank - An empty container or uncontaminated representative matrix carried through the field routine in the same manner as a sample.

Filter Blank - An unused filter extracted and analyzed in the same manner as filters used to collect samples. The filter should be prepared in the same manner as sample filters.

Fixation - The process of putting something into a stable or unalterable form.

Footrope - The line that forms the front edge of the bottom of an otter trawl. Weight is often added to it to keep it on the bottom when being towed.

Formalin - A trademark for a 37 percent by weight aqueous solution of formaldehyde with some methanol.

Formazin - A polymer used as a reference standard suspension for turbidity measurements.

Grab Sample - 1) see increment, or 2) a sample of bottom sediment collected by a grab sampler.

Gravimetric - Of or pertaining to measurement by weight.

Headrope - The line that forms the front edge of the top of an otter trawl. Floats are attached to it to hold the net open when being towed.

Headspace - The airspace between a collected sample and the container lid.

Hydr. wire - The cable used to deploy equipment over the side of a vessel. It usually is attached to a winch at one end and to the piece of equipment at the other end.

Hygroscopic - Readily absorbing moisture, as from the atmosphere.

Increment - An individual portion of material collected by a single operation of a sampling device, from parts of a lot separated in time or space. Increments may be either tested individually or combined (composited) and tested as a unit.

In Situ - In something's original place.

Interelement Correction Factor - A number that adjusts the analyte signal for the interfering effects of other elements present in a sample undergoing ICP analysis (usually done automatically by the instrument itself).

Interference - A substance present in the sample that impedes the accurate measurement of an analyte of interest.

Interference Check Sample - A solution contaminating both interfering and analyte elements of known concentration that can be used to verify background and interelement correction factors in ICP analysis.

In Vivo - Within the living organism.

Isobath - A contour of constant depth.

Macroinvertebrate - An invertebrate retained by a sieve having a mesh size of 1 mm.

Matrix Spike Compound - A known amount of an analyte added to a sample, usually prior to extraction or digestion.

Method Blank - The contamination by the analyte from all sources external to the sample. The blank value is determined by proceeding through all phases of extraction and analysis with no addition of sample.

NBS - National Bureau of Standards.

Offshore - In this document, refers to all aspects of the receiving environment for effluents (i.e., water, sediment, and organisms).

Otter Board - A flat board that is attached to each side of the front end of an otter trawl. Its planing action when being towed holds the mouth of the net open.

Oxidation - An increase in positive valence or a decrease in negative valence by the loss of electrons.

Penetration Depth - The maximum depth below the sediment surface that a grab sampler achieves during a single cast.

Performance Sample - A sample or solution with known concentrations of analytes of interest, submitted to a laboratory for the purpose of evaluating the performance of that laboratory.

Phi Value - A measure of particle size commonly used by geologists. A phi value is equal to the negative logarithm (base 2) of the diameter of a particle expressed in millimeters.

Population - A generic term denoting any finite or infinite collection of individual things, objects, or events; in the broadest concept, an aggregate determined by some property that distinguishes things that do and do not belong.

Precision - The degree of mutual agreement characteristic of independent measurements as the result of repeated application of the process under specified conditions.

Preservation - Maintenance in an unaltered form.

Preventive Maintenance - Procedures conducted routinely to ensure that equipment continues to operate properly.

Primary Standard - A substance or artifact, the value of which can be accepted (within specific limits) without question when used to establish the value of the same or related property of another material.

Priority Pollutant - Those toxic pollutants defined by the U.S. EPA in 1976 that are the primary subject of regulation of the Clean Water Act. A list of these substances can be found in the Code of Federal Regulations Vol. 40, Section 401.15.

Purge - The removal of volatile organic compounds from the sample matrix for analysis.

Quality - An estimation of acceptability or suitability for a given purpose of an object, item, tangible, or intangible thing.

Quality Assurance - A system of activities to provide to the producer or user of a product or a service the assurance that it meets defined standards of quality.

Quality Assessment - The overall system of activities whose purpose is to provide assurance that the quality control activities are being done effectively. It involves a continuing evaluation of performance of the production system and the quality of the products produced.

Quality Control - The overall system of activities whose purpose is to control the quality of a product or service so that it meets the needs of users. The aim is to provide quality that is satisfactory, adequate, dependable, and economic.

Quantification - The determination or expression of the number or amount of something.

Reagent - A solvent or other chemical used during sample preparation or analysis.

Recovery - The amount of an analyte detected relative to the amount added (e.g., spike) or known to be present (e.g., standard reference material). Usually expressed as a percentage.

Reduction - A decrease in positive valence by the loss of electrons or an increase in negative valence by the gain of electrons.

Reference Area - A station or group of stations with which potentially impacted stations are compared to determine the degree of impact. Ideally, the reference area represents unaltered background conditions.

Reference Collection - A group of preserved organisms of known and verified taxonomic identity that is used as the standard for comparison for future taxonomic identifications.

Relative Percent Difference - Difference of two measurements x_1 and x_2, divided by the mean of the measurements, multiplied by 100.

Relaxation - Reduction of muscular or nervous tension.

Replicate - A counterpart of another, usually referring to an analytical sample or a measurement. It is the general case for which duplicate is the special case consisting of two samples or measurements.

Reproducibility - The ability to produce the same results for a measurement. Often measured by calculation of relative percent difference or coefficient of variation.

Resection - The surgical removal of part of an organ or structure.

Sample - A portion of a population or lot. It may consist of an individual or groups of individuals. It may refer to objects, materials, or to measurements, conceivable as part of a larger group that could have been considered.

Sample Integrity - The unaltered composition of a sample.

Sample Matrix - The material in which the analytes of interest are found (e.g., water, sediment, tissue).

Sample Tracking - Monitoring the course of samples through all phases of laboratory analysis.

Scope - The length of hydrowire used when towing an otter trawl.

Secondary Standard - A standard whose value is based upon comparison with some primary standard.

Seed - A population of microbiological organisms added to a sample for BOD analysis because the sample does not contain a microbial population sufficient for the needs of the analysis.

Sensitivity - Capability of methodology or instrumentation to discriminate between samples having differing concentrations of an analyte.

Significant Figure - A figure(s) that remains to a number or decimal after the ciphers to the right or left are cancelled.

Sort - To separate benthic organisms from the inorganic and plant material that are collected in sieved grab samples.

Spike - The addition of a known amount of an analyte or internal standard to a sample.

Split - A replicate portion or sub-sample of a total sample obtained in such a manner that it is not believed to differ significantly from other portions of the same sample.

Standard - A substance or material, the properties of which are believed to be known with sufficient accuracy to permit its use to evaluate the same property of another. In chemical measurements, it often describes a solution of substance, commonly prepared by the analyst, to establish a calibration curve or the analytical response function of an instrument.

Standard Reference Material - A material or substance one or more properties of which are sufficiently well established to be used for the assessment of a method or the calibration of an apparatus.

Sterilization - Removal of all bacteria and other microorganisms from an object.

Subsample - A portion taken from a sample. A laboratory sample may be a subsample of a field sample. Similarly, a test portion may be a subsample of a laboratory sample.

Surrogate Spike Compound - A known amount of a compound, with characteristics similar to that of an analyte, added to a sample prior to extraction. This compound can be used to estimate recovery of analytes of interest. Also called "recovery internal standard."

Tare - The weight of a container or wrapper that is deducted from the gross weight to obtain net weight.

Taxon - A group of organisms constituting one of the categories or formal units in taxonomic classification, such as phylum, class, order, family, genus, or species.

Taxonomy - The theory, principles, and process of classifying organisms in established categories.

TFE - A plastic tetrafluoroethylene polymer composed of very long chains of CF_2 units. Commonly known by the trade name Teflon.

Titration - The process or method of determining the concentration of a substance in solution by adding to it a standard reagent of known concentration in carefully measured amounts until a reaction of definite and known proportion is completed, as shown by a color change c by electrical measurement, and then calculating the unknown concentration

Trace - Very small quantity of analyte in the sample.

True Particle Size Distribution - Distribution comprised only of inorganic particles after organic material is oxidized completely.

Volatile Organic Compounds - Organic compounds with high vapor pressures. In this document it refers to the 29 U.S. EPA priority pollutants considered as volatiles (e.g., benzene).

Winnow - To separate different constituents of a substance by means of a current of air or water.

ZID - Zone of initial dilution for an effluent discharged into the environment.

APPENDIX A

APPENDIX A

RECOMMENDED METHODS FOR METALS IN EFFLUENT

TABLE A-1. LIST OF TEST PROCEDURES APPROVED BY U.S. EPA FOR INORGANIC COMPOUNDS IN EFFLUENT

Note: This table is an exact reproduction of Table 1B (U.S. EPA 1984).

Parameter, units, and method	Reference (method No. or page)				
	EPA 1979	Standard methods 15th Ed.	ASTM	USGS [1]	Other
1 Acidity, as $CaCO_3$, mg/L. Electrometric end point or phenolphthalein end point.	305.1	402(4 d)	D1067-70(E)		
2. Alkalinity, as $CaCO_3$, mg/L. Electrometric or colorimetric:					
Titration to pH 4.5, manual	310.1	403	D1067(B)	I-1030-78	P 548 [8]
Or automated	310.2			I-2030-78	
3. Aluminum—Total [9] mg/L. Digestion [9] followed by:					
AA direct aspiration	202.1	303C		I-3051-78	
AA furnace	202.2	304			
Inductively coupled plasma					Method 200.7 [6]
Or colorimetric (Eriochrome cyanine R)		308B			
4 Ammonia (as N), mg/L: Manual distillation [6] (at pH 9.5)					
Followed by	350.2	417A			
Nesslerization	350.2	417B	D1426-79(A)	I-3520-78	P 153 [8]
Titration	350.2	417D			
Electrode	350.3		D1426-79(D)		
Automated phenate, or	350.1	417F	D1426-79(C)	I-4523-78	
Automated electrode					[6]
5. Antimony—Total [9], mg/L. Digestion [9] followed by:					
AA direct aspiration	204.1	303A			
AA furnace, or	204.2	304			
Inductively coupled plasma					Method 200.7 [6]
6. Arsenic—Total [9], mg/L:					
Digestion [9] followed by	206.5				
Hydride	206.3	303E	D2972-78(B)	I-3062-78	
AA furnace	206.2	304			
Inductively coupled plasma					Method 200.7 [6]
Or, colorimetric (SDDC)	206.4	307B	D2972-78(A)	I-3060-78	
7 Barium—Total [9] mg/L. Digestion [9] followed by:					
AA direct aspiration	208.1	303C		I-3084-78	
AA furnace, or	208.2	304			
Inductively coupled plasma					Method 200.7 [6]
8. Beryllium—Total [9], mg/L. Digestion [9] followed by:					
AA direct aspiration	210.1	303C	D3645-78	I-3086-78	
AA furnace	210.2	304			
Inductively coupled plasma					Method 200.7 [6]
Or colorimetric (aluminon)		308B			
9 Biochemical oxygen demand (BOD$_5$), mg/L.					
Winkler (Azide modification)	405.1	507		I-1578-78	P 17 [8]
Or electrode method					P 548 [8]
10 Boron—Total, mg/L.					
Colorimetric (curcumin) or	212.3	404A		I-3112-78	
Inductively coupled plasma					Method 200.7 [6]
11 Bromide, mg/L. Titrimetric	320.1		D1246-77(C)	I-1125-78	P 544 [8]
12 Cadmium—Total [9], mg/L. Digestion [9] followed by:					
AA direct aspiration	213.2	303A or 303B	D3557-78 (A or B)	I-3135-78 or I-3136-78	Pg. 557 [8]
AA furnace	213.2	304			P 37 [8]
Inductively coupled plasma					Method 200.7 [6]
Voltametry [6] or			D3557-78(C)		
Colorimetric (Dithizone)		310B			
13. Calcium—Total [9] mg/L: Digestion [9] followed by:					
Atomic absorption	215.1	303A	D511-77(C)	I-3152-78	
Inductively coupled plasma					Method 200.7 [6]
Or EDTA titration	215.2	311C	D511-77(B)		
14 Carbonaceous Biochemical oxygen demand (CBOD$_5$), mg/L. Winkler (Azide modification) or electrode method with nitrification inhibitor.		507(5.e.6)			

TABLE A-1. (Continued)

Parameter, units, and method	Reference (method No. or page)				
	EPA 1979	Standard methods 15th Ed.	ASTM	USGS [1]	Other
15 Chemical oxygen demand (COD), mg/L					
Titrimetric colorimetric	410.1	508A	D1252-78	I-3560-78	P 550[8] and
Manual or	410.2			I-3562-78	P 17[9] and
	410.3			I-3561-78	([10])
Automated	410.4				([11])
Spectrophotometric					
16 Chloride mg/L					
Titrimetric (silver nitrate) or		407A	D512-67(B)	I-1183-78	
Mercuric nitrate	325.3	407B	D512-67(A)	I-1184-78	P 554[8]
Colorimetric (ferricyanide) manual or			D512-67(C)	I-1187-78	
Automated	325.1 or 325.2	407D		I-2187-78	
17 Chlorine—Total residual, mg/L					
Titrimetric-amperometric [12]	330.1	408C	D1253-78(A)		
Starch end point	330.2	408B			
Iodometric or	330.3	408A	D1253-78(B)		
DPD-FAS	330.4	408D			
Spectrophotometric, DPD; or	330.5	408E			
Electrode					([13])
18. Chromium VI dissolved, mg/L 0.45 micron filtration with:					
Extraction and atomic absorption, or	218.4	303B		I-1232-78	
Colorimetric (Diphenylcarbazide)				I-1230-78	
19 Chromium—Total [3] mg/L					
Digestion [5] (optional extraction) followed by	218.3				
AA direct aspiration	218.1	303A or 303B	D1687-77(D)	I-3236-78	P 557[8]
AA furnace	218.2	304			
Inductively coupled plasma					Method 200.7[6]
Or colorimetric (Diphenylcarbazide)		312A	D1687-77(A)		
Cobalt—Total [3] mg/L Digestion [5] followed by					
AA direct aspiration	219.1	303A or 303B	D3558-77 (A or B)	I-3240-78 or I-3239-78	P 37[8]
AA furnace, or	219.2	304			
Inductively coupled plasma					Method 200.7[6]
21 Color platinum Cobalt units or dominant wavelength hue, luminance, purity					
Colorimetric, ADMI	110.1	204D			([14])
Platinum cobalt, or	110.2	204A		I-1250-78	
Spectrophotometric	110.3	204B			
22 Copper—Total [3] mg/L Digestion [5] followed by					
AA direct aspiration	220.1	303A or 303B	D1688-77 (D or E)	I-3271-78 or I-3270-78	P 557[8] and P 37[8]
AA furnace	220.2	304			
Inductively coupled plasma					Method 200.7[6]
Colorimetric (Neocuproine)		313B	D1688-77(A)		
Bicinchoninate					([14])
23 Cyanide—Total mg/L					
Manual distillation with $MgCl_2$	335.2	412D			
Followed by titrimetric	335.2	412B			P 22[8]
Manual or	335.2	412C	D2036-75(A)		
Automated [12] spectrophotometric	335.3	412D	D2036-75(A)	I-3300-78	
24 Cyanide amenable to chlorination mg/L. Manual distillation with $MgCl_2$ Followed by titrimetric, manual or automated [12] spectrophotometric	335.1	412F	D2036-75(B)		
25 Fluoride—Total mg/L					
Manual distillation [7]		413A			
Followed by manual or	340.2	413B	D1179-72(B)		
Automated electrode				I-4327-78	
SPADNS	340.1	413C	D1179-72(A)		
Or automated complexone	340.3	413E			
26 Gold—Total [3] mg/L Digestion [5] followed by:					
AA direct aspiration	231.1	303A			
Or AA furnace	231.2	304			
27 Hardness—Total as $CaCO_3$ mg/L					
Automated colorimetric	130.1				
EDTA titration	130.2	314B	D1126-67(B)	I-1338-78	
Inductively coupled plasma					Method 200.7[6]
Or atomic absorption (sum	215.1+	303A		I-3153-78+	
of Ca and Mg as their respective carbonates)	242.1			I-3449-78	

TABLE A-1. (Continued)

Parameter, units, and method	Reference (method No. or page)				
	EPA 1979	Standard methods 15th Ed.	ASTM	USGS [1]	Other
29. Hydrogen ion (pH), pH units:					
Electrometric	150.1	423	D1293-78(A) or D1293-78(B).	I-1586-78	
Measurements, or automated electrode					[10]
29. Iridium—Total [5], mg/L. Digestion [6] followed by:					
AA direct aspiration	235.1	303A			
Or AA furnace	235.2	304			
30. Iron—Total [5] mg/L:					
Digestion [6] followed by		303A or 303B	D1068-77		
AA direct aspiration	236.1	303B	(C or D)	I-3381-78	P 557 [9]
AA furnace	236.2	304			
Inductively coupled plasma					Method 200.7 [4]
Or colorimetric (Phenanthroline)		315B	D1068-77(A)		[11]
31. Kjeldahl nitrogen—Total (as N), mg/L:					
Digestion and distillation	351.3	420A or B			P 552 [9]
Followed by titration	351.3	417D	D3590-77		
Nesslerization or	351.3	417B			
Electrode	351.3	417E		I-4551-78	
Automated phenate	351.1			I-4552-78	
Semi-automated block digestor	351.2				
Or potentiometric	351.4				
32. Lead—Total [5], mg/L. Digestion [6] followed by:					
AA direct aspiration	239.1	303A or 303B	D3559-78 (A or B)	I-3399-78	P 557 [9]
AA furnace	239.2	304			
Inductively coupled plasma					Method 200.7 [4]
Voltametry [7] or			D3559-78(C)		
Colorimetric (Dithizone)		316B			
33. Magnesium—Total [5], mg/L. Digestion [6] followed by:					
Atomic absorption	242.1	303A	D511-77(B)	I-3447-78	P 557 [9]
Inductively coupled plasma					Method 200.7 [4]
Or gravimetric		319B	D511-77(A)		
34. Manganese—Total [5], mg/L: Digestion [6] followed by:					
AA direct aspiration	243.1	303A or 303B	D858-77 (B or C)	I-3454-78	P 557 [9]
AA furnace	243.2	304			
Inductively coupled plasma					Method 200.7 [4]
Or colorimetric (Persulfate)		319B	D858-77(A)		P 564 [9]
Periodate					18
35. Mercury—Total [5], mg/L:					
Cold vapor, manual or	245.1	303F	D3223-79	I-3462-78	P 559 [9]
Automated	245.2				
36. Molybdenum—Total [5], mg/L. Digestion [6] followed by:					
AA direct aspiration	246.1	303C		I-3490-78	
AA furnace, or	246.2	304			
Inductively coupled plasma					Method 200.7 [4]
37. Nickel—Total [5], mg/L. Digestion [6] followed by:					
AA direct aspiration	249.1	303A or 303B	D1886-77 (C or D)	I-3499-78	
AA furnace	249.2	304			
Inductively coupled plasma					Method 200.7 [4]
Or colorimetric (Heptoxime)		321B			
38. Nitrate (as N), mg/L:					
Brucine sulfate, or	352.1		D992-71		P 554 [9]
Nitrate-nitrite N minus Nitrite N	See parameters 39 and 40.	See parameters 39 and 40.	See parameters 39 and 40.	See parameters 39 and 40.	P 28. [9]
39. Nitrate-nitrite (as N), mg/L:					
Cadmium reduction, manual	353.3	418C	D3867-79(B)		
Or automated; or	353.2	418F	D3867-79(A)	I-4545-78	
Automated hydrazine	353.1				
40. Nitrite (as N), mg/L:					
Spectrophotometric, manual or	354.1	419	D1254-67		18.
Automated (Diazotization)				I-4540-78	
41. Oil and grease—Total recoverable, mg/L: Gravimetric (extraction).	413.1	503A			
42. Organic carbon—Total (TOC), mg/L: Combustion or oxidation.	415.1	505	D2579-78(A) or D2579-78(B).		P 561 [9] and P 4 [10]
43. Organic nitrogen (as N), mg/L: Total Kjeldahl N minus ammonia N.	See parameters 31 and 4.	420A	D3590-77 minus D1426-79(A).	See parameters 31 and 4	PP 552-53. [9]
44. Orthophosphate (as P), mg/L: Ascorbic acid method, automated	365.1	424G		I-4601-78	P 561. [9]
Or manual single reagent or	365.2	424F	D515-79(A)		
Manual two reagent	365.3				
45. Osmium—Total [5], mg/L: Digestion [6] followed by:					
AA direct aspiration, or	252.1	303C			
AA furnace	252.2	304			
46. Oxygen, dissolved, mg/L:					
Winkler (Azide modification)	360.2	421B	D1589-60(A)	I-1575-78	P 550. [9]
Or electrode	360.1	421F		I-1576-78	
47. Palladium—Total [5], mg/L: Digestion [6] followed by:					
AA direct aspiration	253.1				P 527 [10]
Or AA furnace	253.2				P 528 [10]
48. Phenols, mg/L:					
Manual distillation	420.1		D1783-70 (A or B)		28.
Followed by manual	420.1				28.
Or automated [10] colorimetric (4AAP)	420.2				
49. Phosphorus (elemental), mg/L: Gas-liquid chromatography.					21.

TABLE A-1. (Continued)

Parameter, units, and method	Reference (method No. or page)				
	EPA 1979	Standard methods 15th Ed.	ASTM	USGS [1]	Other
50 Phosphorus—Total, mg/L					
Persulfate digestion	365.2	424C (3)			P 561 [5]
Followed by manual or	365.2 or 365.3	424F	D515-79(A)		
Automated ascorbic acid	365.1	424G		I-4600-78	
Reduction or semi-automated block digestor	365.4			I-4603-78	
51 Platinum—Total [2] mg/L Digestion [3] followed by					
AA direct aspiration	255.1	303A			
Or AA furnace	255.2	304			
52 Potassium—Total [2] mg/L Digestion [3] followed by					
Atomic absorption	258.1	303A		I-3630-78	P 560 [5]
Inductively coupled plasma					Method 200.7 [4]
Or flame photometric		322B	D1428-64(A)		
53 Residue—total, mg/L Gravimetric, 103-105°C	160.3	209A		I-3750-78	
54 Residue—filterable mg/L Gravimetric, 180°C	160.1	209B		I-1750-78	
55 Residue—nonfilterable (TSS) mg/L Gravimetric 103-105°C post washing of residue	160.2	209D		I-3765-78	
56 Residue—settleable, mg/L Volumetric (imhoff cone) or gravimetric	160.5	209F			
57 Residue—volatile mg/L Gravimetric, 550°C	160.4	209E		I-3753-78	
58 Rhodium—Total [2], mg/L Digestion [3] followed by					
AA direct aspiration	265.1	303A			
Or AA furnace	265.2	304			
59 Ruthenium—Total [2], mg/L Digestion [3] followed by					
AA direct aspiration	267.1	303A			
Or AA furnace	267.2	304			
60 Selenium—Total [2] mg/L Digestion [3] followed by					
AA furnace	270.2	304			
Inductively coupled plasma					Method 200.7 [4]
Or hydride	270.3	303E	D3859-79	I-3667-78	
Silica—Dissolved, mg/L 0.45 micron filration					
Followed by manual or	370.1	425C	D859-68(B)	I-1700-78	
Automated colorimetric (Molybdosilicate), or				I-2700-78	
Inductively coupled plasma					Method 200.7 [4]
62 Silver—Total [2] mg/L Digestion [3] followed by:					
AA direct aspiration	272.1	303A or 303B		I-3720-78	P 557 [5] and p 37 [6]
AA furnace, or	272.1	304			
Inductively coupled plasma					Method 200.7 [4]
63 Sodium—Total [2], mg/L Digestion [3] followed by:					
Atomic absorption	273.1	303A		I-3735-78	P 561 [5]
Inductively coupled plasma					Method 200.7 [4]
Or flame photometric			D1428-64(A)		
64 Specific conductance, mhos/cm Wheatstone bridge	120.1	205	D1125-77(A)	I-1780-78	P 547 [5]
65 Sulfate (as SO_4), mg/L					
Automated methylthymol blue	375.2			I-2822-78	
Gravimetric, or	375.3	426A or 426B	D516-68(A)		PP 562-63 [5]
Turbidimetric	375.4	426C	D516-68(B)		
66 Sulfide (as S), mg/L					
Titrimetric (iodine) or	376.1	427D		I-3840-78	
Colorimetric (methylene blue)	376.2	427C			
67 Sulfite (as SO_3), mg/L Titrimetric (iodine iodate)	377.1	428F	D1339-79(C)		
68 Surfactants, mg/L Colorimetric (methylene blue)	425.1	512A	D2330-68(A)		
69 Temperature, °C Thermometric	170.1	212			([15])
70 Thallium—Total [2] mg/L Digestion [3] followed by:					
AA direct aspiration	279.1	303A			
AA furnace, or	279.2	304			
Inductively coupled plasma					Method 200.7 [4]
71 Tin—Total,[2] mg/L Digestion [3] followed by:					
AA direct aspiration or	282.1	303A		I-3860-78	
AA furnace	282.2	304			
72 Titanium—Total,[2] mg/L Digestion [3] followed by:					
AA direct aspiration or	283.1	303C			
AA furnace	283.2	304			
73 Turbidity NTU Nephelometric	180.1	214A	D1889-71	I-3860-78	
74 Vanadium—Total,[2] mg/L Digestion [3] followed by					
AA direct aspiration	286.1	303C			
AA furnace	286.2	304			
Inductively coupled plasma					Method 200.7 [4]
Or colorimetric (Gallic acid)			D3373-75		
75 Zinc—Total,[2] mg/L Digestion [3] followed by:					
AA direct aspiration	289.1	303A or 303B	D1691-77(D)	I-3900-78	P 557 [5]
AA furnace	289.2	304	D1691-77(C)		P 37 [6]
Inductively coupled plasma					Method 200.7 [4]
Or colorimetric (Zincon)					[14]

TABLE A-1. (Continued)

Table 1B Notes

Methods for Analysis of Inorganic Substances in Water and Fluvial Sediments," U.S. Department of the Interior, U.S. Geological Survey, Open-File Report 79-479 or "Methods for Determination of Inorganic Substances in Water and Fluvial Sediments," N.W. Skougstad, *et al*, U.S. Geological Survey, Techniques of Water Resources Investigation, Book 5, Chapter A1, 1979.

[1] "Official Methods of Analysis of the Association of Official Analytical Chemists" methods manual, 12th ed. (1980).

[2] For the determination of total metals the sample is not filtered before processing. A digestion procedure is required to solubilize suspended material and to destroy possible organic metal complexes. Two digestion procedures are given in "Methods for Chemical Analysis of Water and Wastes, 1979." One (§ 4.1.3) is a vigorous digestion using nitric acid. A less vigorous digestion using nitric and hydrochloric acids (§ 4.1.4) is preferred; however, the analyst should be cautioned that the mild digestion may not suffice for all sample types. Particularly if a colorimetric procedure is to be employed, it is necessary to ensure that all organo-metallic bonds be broken so that the metal is in a reactive state. In those situations, the vigorous digestion is to be preferred, making certain that at no time does the sample go to dryness. Samples containing large amounts of organic materials would also benefit by the vigorous digestion. Use of the graphite furnace technique, inductively coupled plasma, as well as determinations for certain elements such as arsenic, the noble metals, mercury, selenium, and titanium require a modified digestion and in all cases the method write-up should be consulted for specific instructions and/or cautions.

Note: If the digestion procedure for direct aspiration or graphite furnace atomic absorption analysis included in one of the other approved references is different than the above, the EPA procedure must be used.

Dissolved metals are defined as those constituents which will pass through a 0.45 micron membrane filter. Following filtration of the sample, the referenced procedure for total metals must be followed. Sample digestion of the filtrate for dissolved metals, or digestion of the original sample solution for total metals may be omitted for AA (direct aspiration or graphite furnace) and ICP analyses provided the sample has a low COD and the filtrate meets the following criteria.

(a) is visibly transparent
(b) has no perceptible odor, and
(c) is free of particulate or suspended matter following acidification

[3] The full text of Method 200.7, "Inductively Coupled Plasma Atomic Emission Spectrometric Method for Trace Element Analysis of Water and Wastes," is given at Appendix C of this Part 136.

[4] Manual distillation is not required if comparability data on representative effluent samples are on company file to show that the preliminary distillation step is not necessary; however, manual distillation will be required to resolve any controversies.

[5] "Ammonia, Automated Electrode Method, Industrial Method Number 379-75WE, dated February 19, 1976," Technicon Autoanalyzer II, Technicon Industrial Systems, Tarrytown, New York 10591.

[6] Carbonaceous biochemical oxygen demand ($CBOD_5$) must not be confused with the traditional BOD_5 test which measures "total BOD." The addition of the nitrification inhibitor is not a procedural option, but must be included to report the $CBOD_5$ parameter. A discharger whose permit requires reporting the traditional $CBOD_5$ may not use a nitrification inhibitor in the procedure for reporting the results. Only when a discharger's permit specifically states $CBOD_5$ is required can the permittee report data obtained using the nitrification inhibitor.

[7] American National Standard on Photographic Processing Effluents, Apr. 2, 1975. Available from ANSI, 1430 Broadway, New York, NY 10018.

[8] The use of normal and differential pulse voltage ramps to increase sensitivity and resolution is acceptable.

[9] "Chemical Oxygen Demand, Method 8000, Hach Handbook of Water Analysis, 1979." Hach Chemical Company, P.O. Box 389, Loveland, Colorado 80537.

[10] "COD Method," Oceanography International Corporation, 512 West Loop, P.O. Box 2980, College Station, Texas 77840.

[11] The back titration method will be used to resolve controversy.

[12] National Council of the Paper Industry for Air and Stream Improvement, Inc., Technical Bulletin 253, December 1971.

[13] Copper, Bicinchoninate Method, Method 8506, Hach Handbook of Water Analysis, 1979, Hach Chemical Company, P.O. Box 389, Loveland, Colorado 80537.

[14] After the manual distillation is completed, the auto-analyzer manifolds in EPA Methods 335.03 (Cyanide) or 420.2 (phenols) are simplified by connecting the re-sample line directly to the sampler. When using the manifold setup shown in Method 335, the buffer 6.2 should be replaced with the buffer 7.6 found in Method 335.2.

[15] "Hydrogen Ion (pH), Automated Electrode Method, Industrial Method Number 378-75WA, October 1976," Technicon Auto-Analyzer II, Technicon Industrial Systems, Tarrytown, New York 10591.

[16] "Iron, 1,10-Phenanthroline Method, Method 8008, 1980, Hach Chemical Company, P.O. Box 389, Loveland, Colorado 80537.

[17] "Manganese, Periodate Oxidation Method, Method 8034, Hach Handbook of Wastewater Analysis, 1979, pages 2-113 and 2-117, Hach Chemical Company, Loveland, Colorado 80537.

[18] "Nitrogen, Nitrite, Method 8507, Hach Chemical Company, P.O. Box 389, Loveland, Colorado 80537.

[19] Goerlitz, D., Brown, E., "Methods for Analysis of Organic Substances in Water," U.S. Geological Survey, Techniques of Water-Resources Investigations, Book 5, Chapter A3, p.4 (1972).

[20] D.F. Addison and R.G. Ackman, "Direct Determination of Elemental Phosphorus by Gas-Liquid Chromatography," Journal of Chromatography, Vol. 47, No. 3, pp. 421-426, 1970.

[21] Recommended methods for the analysis of silver in industrial wastewaters at concentrations of 1 mg/L and above are inadequate where silver exists as an inorganic halide. Silver halides such as the bromide and chloride are relatively insoluble in reagents such as nitric acid but are readily soluble in an aqueous buffer of sodium thiosulfate and sodium hydroxide to a pH of 12. Therefore, for levels of silver above 1 mg/L, 20 mL of sample should be diluted to 100 mL by adding 40 mL each of 2 M $Na_2S_2O_3$ and 2M NaOH. Standards should be prepared in the same manner. For levels of silver below 1 mg/L the recommended method is satisfactory.

[22] Stevens, H.H., Ficke, J.F., and Smoot, G.F., "Water Temperature-Influential Factors, Field Measurement and Data Presentation," U.S. Geological Survey, Techniques of Water Resources Investigations, Book 1, Chapter D1, 1975.

[23] "Zinc, Zincon Method, Method 8009, Hach Handbook of Water Analysis, 1979, pages 2-231 and 2-233, Hach Chemical Company, Loveland, Colorado 80537.

[24] "Selected Analytical Methods Approved and Cited by the United States Environmental Protection Agency," Supplement to the Fifteenth Edition of *Standard Methods for the Examination of Water and Wastewater* (1981).

[25] The approved method is that cited in *Standard Methods for the Examination of Water and Wastewater*, 14th Edition. The colorimetric reaction is conducted at a pH of 10.0 ± 0.2. The approved methods are given on pp. 578-81 of the 14th Edition: Method 510A for distillation, Method 510B for the manual colorimetric procedure, or Method 510C for the manual spectrophotometric procedure.

[26] "ORION Research Instruction Manual, Residual Chlorine Electrode Model 97-70," 1977, Orion Research Incorporated, 840 Memorial Drive, Cambridge, Massachusetts 02138.

APPENDIX B

APPENDIX B

RECOMMENDED METHODS FOR ORGANIC COMPOUNDS IN EFFLUENT

TABLE B-1. LIST OF TEST PROCEDURES APPROVED BY U.S. EPA FOR NON-PESTICIDE ORGANIC COMPOUNDS IN EFFLUENT

Note: This table is an exact reproduction of Table 1C (U.S. EPA 1984).

Parameter[1]	EPA Method Number[1,2]			Other
	GC	GC/MS	HPLC	
1. Acenaphthene	610	625, 1625	610	
2. Acenaphthylene	610	625, 1625	610	
3. Acrolein	603	[3]624, 1624		
4. Acrylonitrile	603	[3]624, 1624		
5. Anthracene	610	625, 1625	610	
6. Benzene	602	624, 1624		
7. Benzidine	--	[3]625, 1625	605	Note 3, p. 1
8. Benzo(a)anthracene	610	625, 1625	610	
9. Benzo(a)pyrene	610	625, 1625	610	
10. Benzo(b)fluoranthene	610	625, 1625	610	
11. Benzo(ghi)perylene	610	625, 1625	610	
12. Benzo(k)fluoranthene	610	625, 1625	610	
13. Benzyl Chloride				Note 3, p. 130; Note 6, p. S102.
14. Benzyl Butyl Phthalate	606	625, 1625		
15. Bis(2-chloroethoxy) methane	611	625, 1625		
16. Bis(2-chloroethyl) ether	611	625, 1625		
17. Bis(2-ethylhexyl) phthalate	606	625, 1625		
18. Bromodichloromethane	601	624, 1624		
19. Bromoform	601	624, 1624		
20. Bromomethane	601	624, 1624		
21. 4-Bromophenylphenyl ether	611	625, 1625		
22. Carbon tetrachloride	601	624, 1624		Note 3, p. 130
23. 4-Chloro-3-methylphenol	604	625, 1625		
24. Chlorobenzene	601, 602	624, 1624		Note 3, p. 130
25. Chloroethane	601	624, 1624		
26. 2-Chloroethylvinyl ether	601	624, 1624		
27. Chloroform	601	624, 1624		Note 3, p. 130
28. Chloromethane	601	624, 1624		
29. 2-Chloronaphthalene	612	625, 1625		
30. 2-Chlorophenol	604	625, 1625		
31. 4-Chlorophenylphenyl ether	611	625, 1625		
32. Chrysene	610	625, 1625	610	
33. Dibenzo(a,h)anthracene	610	625, 1625	610	
34. Dibromochloromethane	601	624, 1624		
35. 1,2-Dichlorobenzene	601, 602, 612	624, 625, 1625		
36. 1,3-Dichlorobenzene	601, 602, 612	624, 625, 1625		
37. 1,4-Dichlorobenzene	601, 602, 612	625, 1624, 1625		
38. 3,3'-Dichlorobenzidine		625, 1625	605	
39. Dichlorodifluoromethane	601			
40. 1,1-Dichloroethane	601	624, 1624		
41. 1,2-Dichloroethane	601	624, 1624		
42. 1,1-Dichloroethene	601	624, 1624		
43. trans-1,2-Dichloroethene	601	624, 1624		
44. 2,4-Dichlorophenol	604	625, 1625		
45. 1,2-Dichloropropane	601	624, 1624		
46. cis-1,3-Dichloropropene	601	624, 1624		
47. trans-1,3-Dichloropropene	601	624, 1624		
48. Diethyl phthalate	606	625, 1625		
49. 2,4-Dimethylphenol	604	625, 1625		
50. Dimethyl phthalate	606	625, 1625		
51. Di-n-butyl phthalate	606	625, 1625		
52. Di-n-octyl phthalate	606	625, 1625		
53. 2,4-Dinitrophenol	604	625, 1625		
54. 2,4-Dinitrotoluene	609	625, 1625		
55. 2,6-Dinitrotoluene	609	625, 1625		
56. Epichlorohydrin				Note 3, p. 130; Note 6, p. S102.

TABLE B-1. (Continued)

	Parameter [1]	EPA Method Number [2,3]			Other
		GC	GC/MS	HPLC	
57	Ethylbenzene	602	624, 1624		
58	Fluoranthene	610	625, 1625	610	
59	Fluorene	610	625, 1625	610	
60	Hexachlorobenzene	612	625, 1625		
61	Hexachlorobutadiene	612	625, 1625		
62	Hexachlorocyclopentadiene	612	[5] 625, 1625		
63	Hexachloroethane	612	625, 1625		
64	Indeno(1,2,3-cd)pyrene	610	625, 1625	610	
65	Isophorone	609	625, 1625		
66	Methylene Chloride	601	624, 1624		Note 3, p. 139;
67	2-Methyl-4,6-Dinitrophenol	604	625, 1625		
68	Naphthalene	610	625, 1625		
69	Nitrobenzene	609	625, 1625		
70	2-Nitrophenol	604	625, 1625		
71	4-Nitrophenol	604	625, 1625		
72	N-Nitroso-dimethylamine	607	625, 1625		
73	N-Nitroso-di-n-propylamine	607	[5] 625, 1625		
74	N-Nitrosodiphenylamine	607	[5] 625, 1625		
75	2,2-oxybis(1-chloropropane)	611	625, 1625		
76	PCB-1016	608		525,	Note 3, p. [illegible]
77	PCB-1221	608		525,	Note 3, p. 43;
78	PCB-1232	608		525,	Note 3, p. 43;
79	PCB-1242	608		525,	Note 3, p. 43;
80	PCB-1248	608		525,	Note 3, p. 43;
81	PCB-1254	608		525,	Note 3, p. 43;
82	PCB-1260	608		525,	Note 3, p. 43;
83	Pentachlorophenol	604	625, 1625		Note 3, p. 140;
84	Phenanthrene	610	625, 1625	610	
85	Phenol	604	625, 1625		
86	Pyrene	610	625, 1625	610	
87	2,3,7,8-Tetrachlorodibenzo-p-dioxin		[6] 613		
88	1,1,2,2-Tetrachloroethane	601	624, 1624		Note 3, p. 139;
89	Tetrachloroethene	601	624, 1624		Note 3, p. 139;
90	Toluene	602	624, 1624		
91	1,2,4-Trichlorobenzene	612	625, 1625		Note 3, p. 139;
92	1,1,1-Trichloroethane	601	624, 1624		
93	1,1,2-Trichloroethane	601	624, 1624		Note 3, p. 139;
94	Trichloroethene	601	624, 1624		
95	Trichlorofluoromethane	601	624,		
96	2,4,6-Trichlorophenol	604	625, 1625		
97	Vinyl Chloride	601	624, 1624		

Table IC Notes

All parameters are expressed in micrograms per liter (µg/L).

[1] The full text of Methods 601-613, 624, 625, 1624, and 1625, are given at Appendix A, "Test Procedures for Analytes of Organic Pollutants," of this Part 136. The standardized test procedure to be used to determine the method detection limit (MDL) for these test procedures is given at Appendix B, "Definition and Procedure for the Determination of the Method Detection Limit," of this Part 136.

[2] "Methods for Benzidine, Chlorinated Organic Compounds, Pentachlorophenol and Pesticides in Water and Wastewater," U.S. Environmental Protection Agency, September 1978.

[3] Method 624 may be extended to screen samples for Acrolein and Acrylonitrile. However, when they are known to be present, the preferred method for these two compounds is Method 603 or Method 1624.

Method 625 may be extended to include benzidine, hexachlorocyclopentadiene, N-nitrosodimethylamine, and N-nitrosodiphenylamine. However, when they are known to be present, Methods 605, 607 and 612, or Method 1625, are preferred methods for these compounds.

[5] 625, Screening only.

[6] "Selected Analytical Methods Approved and Cited by the United States Environmental Protection Agency," Supplement to the Fifteenth Edition of *Standard Methods for the Examination of Water and Wastewater* (1981).

[7] Each analyst must make an initial, one-time, demonstration of their ability to generate acceptable precision and accuracy with Methods 601-613, 624, 625, 1624, and 1625 (See Appendix A of this Part 136) in accordance with procedures each in section 8.2 of each of these Methods. Additionally, each laboratory, on an on-going basis must spike and analyze 10% (5% for Methods 624 and 625 and 100% for methods 1624, and 1625) of all samples to monitor and evaluate laboratory data quality in accordance with sections 8.3 and 8.4 of these Methods. When the recovery of any parameter falls outside the warning limits, the analytical results for that parameter in the unspiked sample are suspect and cannot be reported to demonstrate regulatory compliance.

Note.—These warning limits are promulgated as an "interim final action with a request for comments."

TABLE B-2. LIST OF TEST PROCEDURES APPROVED BY U.S. EPA FOR PESTICIDES IN EFFLUENT

Note: This table is an exact reproduction of Table 1D (U.S. EPA 1984).

Parameter µg/L)	Method	EPA[a,b]	Standard Methods 15th Ed	ASTM	Other
1 Aldrin	GC	608	509A	D3086	Note 3, p 7, Note 4, p. 30
	GC/MS	625			
2 Ametryn	GC				Note 3, p 83, Note 6, p. S68.
3 Aminocarb	TLC				Note 3 p. 94 Note 6, p S16
4 Atrazin	GC				Note 3 p 83, Note 6 p S68
5 Atrazine	GC				Note 3 p 83, Note 6 p S68
6 Azinphos methyl	GC				Note 3, p 25, Note 6 p S51
7 Barban	TLC				Note 3, p 101, Note 6 p S64
8 α-BHC	GC	608	509A	D3086	Note 3 p 7
	GC/MS	[b] 625			
9 β-BHC	GC	608		D3086	
	GC/MS	625			
10 δ-BHC	GC	608		D3086	
	GC/MS	[b] 625			
11 γ-BHC (Lindane)	GC	608	509A	D3086	Note 3 p 7 Note 4 p 0
	GC/MS	625			
12 Captan	GC		509A		Note 3 p 7
13. Carbaryl	TLC				Note 3 p 94 Note 6 p S60
14 Carbophenothion	GC				Note 4 p 30 Note 6 p S73
15. Chlordane	GC	608	509A	D3086	Note 3 p 7
	GC-MS	625			
16. Chlorobenzilate	TLC				Note 3 p 104 Note 6 p S64
17 2,4-D	GC		509B		Note 3, p 115 Note 4 p 35
18 4,4'-DDD	GC	608	509A	D3086	Note 3 p 7 Note 4 p 30
	GC-MS	625			
19 4,4'-DDE	GC	608	509A	D3086	Note 3 p 7 Note 4 p 30
	GC/MS	625			
20 4,4'-DDT	GC	608	509A	D3086	Note 3 p 7 Note 4 p 30
	GC/MS	625			
21 Demeton-O	GC				Note 3, p 25 Note 6 p S51
22 Demeton-S	GC				Note 3, p 25 Note 6 p S51
23. Diazinon	GC				Note 3, p 25 Note 4 p 30 Note 6 p S51
24 Dicamba	GC				Note 3 p 115
25. Dichlofenthion	GC				Note 4 p 30, Note 6 p S73
26. Dichloran	GC		509A		Note 3, p. 7
27 Dicofol	GC			D3086	
28. Dieldrin	GC	608	509A		Note 3, p 7 Note 4 p 30
	GC/MS	625			
29 Dioxathion	GC				Note 4 p 30 Note 6 p S73
30 Diquiton	GC				Note 3 p Note 6 p S51
31 Diuron	TLC				Note 3, p 104 Note 6 p S64
32. Endosulfan I	GC	608	509A	D3086	Note 3, p 7
	GC/MS	[b] 625			
33. Endosulfan II	GC	608	509A	D3086	Note 3, p 7
	GC/MS	[b] 625			
34 Endosulfan sulfate	GC	608			
	GC/MS	625			
35. Endrin	GC	608	509A	D3086	Note 3, p 7 Note 4 p 30
	GC/MS	[b] 625			
36. Endrin aldehyde	GC	608			
	GC/MS	625			
37 Ethion	GC				Note 4 p 30, Note 6, p S73
38. Fenuron	TLC				Note 3, p 104, Note 6, p S64
39 Fenuron-TCA	TLC				Note 3, p 104 Note 6, p S64
40 Heptachlor	GC	608	509A	D3086	Note 3 p. 7 Note 4 p 30
	GC/MS	625			
41 Heptachlor epoxide	GC	608	509A	D3086	Note 3, p. 7 Note 4 p. 30 Note 6 p S73.

TABLE B-2. (Continued)

Parameter µg/L	Method	EPA[1]	Standard Methods 15th Ed	ASTM	Other
42. Isodrin	GC/MS	625			
	GC				Note 4, p. 30; Note 6, p. 573
43. Linuron	TLC				Note 3, p. 104; Note 6, p. 564
44. Malathion	GC		509A		Note 3, p. 25; Note 4, p. 30; Note 6, p. 551
45. Methiocarb	TLC				Note 3, p. 94; Note 6, p. 560
46. Methoxychlor	GC		509A	D3086	Note 3, p. 7; Note 4, p. 30
47. Mexacarbate	TLC				Note 3, p. 94; Note 6, p. 560
48. Mirex	GC		509A		Note 3, p. 7
49. Monuron	TLC				Note 3, p. 104; Note 6, p. 564
50. Monuron-TCA	TLC				Note 3, p. 104; Note 6, p. 564
51. Neburon	TLC				Note 3, p. 104; Note 6, p. 564
52. Parathion methyl	GC		509A		Note 3, p. 25; Note 4, p. 30
53. Parathion ethyl	GC		509A		Note 3, p. 25
54. PCNB	GC		509A		Note 3, p. 7
55. Perthane	GC			D3086	
56. Prometon	GC				Note 3, p. 93; Note 6, p. 560
57. Prometryn	GC				Note 3, p. 63; Note 6, p. 560
58. Propazine	GC				Note 3, p. 63; Note 6, p. 560
59. Propham	TLC				Note 3, p. 104; Note 6, p. 564
60. Propoxur	TLC				Note 3, p. 94; Note 6, p. 560
61. Secbumeton	TLC				Note 3, p. 63; Note 6, p. 560
62. Siduron	TLC				Note 3, p. 104; Note 6, p. 564
63. Simazine	GC				Note 3, p. 63; Note 6, p. 560
64. Strobane	GC		509A		Note 3, p. 7
65. Swep	TLC				Note 3, p. 104; Note 6, p. 564
66. 2,4,5-T	GC		509B		Note 3, p. 115; Note 4, p. 25
67. 2,4,5-TP (Silvex)	GC		509B		Note 3, p. 115
68. Terbuthylazine	GC				Note 3, p. 63; Note 6, p. 560
69. Toxaphene	GC	608	509A	D3086	Note 3, p. 7; Note 4, p. 30
	GC/MS	625			
70. Trifluralin	GC		509A		Note 3, p. 7

Table B2 Notes

[1] Pesticides are listed in this table by common name for the convenience of the reader. Additional pesticides may be found under Table 1C, where entries are listed by chemical name.

[2] The full text of methods 608 and 625 are given at Appendix A, "Test Procedures for Analysis of Organic Pollutants," of this Part 136. The standardized test procedure to be used to determine the method detection limit (MDL) for these test procedures is given at Appendix B, "Definition and Procedure for the Determination of the Method Detection Limit," of this Part 136.

[3] "Methods for Benzidine, Chlorinated Organic Compounds, Pentachlorophenol and Pesticides in Water and Wastewater," U.S. Environmental Protection Agency, September 1978. This EPA publication includes thin-layer chromatography (TLC) methods.

[4] "Methods for Analysis of Organic Substances in Water," U.S. Geological Survey, Techniques of Water-Resources Investigations, Book 5, Chapter A3 (1972).

[5] The method may be extended to include α-BHC, β-BHC, endosulfan I, endosulfan II, and endrin. However, when they are known to exist, Method 608 is the preferred method.

[6] "Selected Analytical Methods Approved and Cited by the United States Environmental Protection Agency," Supplement to the Fifteenth Edition of *Standard Methods for the Examination of Water and Wastewater* (1981).

[7] Each analyst must make an initial, one-time, demonstration of their ability to generate acceptable precision and accuracy with Methods 608 and 625 (See Appendix A of this Part 136) in accordance with procedures given in Section 8.2 of each of these methods. Additionally, each laboratory, on an on-going basis, must spike and analyze 10% of all samples analyzed with Method 608 or 5% of all samples analyzed with Method 625 to monitor and evaluate laboratory data quality in accordance with Sections 8.3 and 8.4 of these methods. When the recovery of any parameter falls outside the warning limits, the analytical results for that parameter in the unspiked sample are suspect and cannot be reported to demonstrate regulatory compliance.

Note.—These warning limits are promulgated as an "interim final action with a request for comments."