EPA-670/2-75-016
April 1975

Environmental Protection Technology Series

THE RECLAMATION OF SULFURIC ACID FROM WASTE STREAMS

National Environmental Research Center
Office of Research and Development
U.S. Environmental Protection Agency
Cincinnati, Ohio 45268

EPA-670/2-75-016
April 1975

THE RECLAMATION OF SULFURIC ACID FROM WASTE STREAMS

By

Howard C. Peterson
Peter L. Kern

Research Department
The New Jersey Zinc Company
Palmerton, Pennsylvania 18071

Project No. S-801349
Program Element No. 1BB036

Project Officer

Herbert S. Skovronek
Industrial Waste Treatment Research Laboratory
Edison, New Jersey 08817

NATIONAL ENVIRONMENTAL RESEARCH CENTER
OFFICE OF RESEARCH AND DEVELOPMENT
U.S. ENVIRONMENTAL PROTECTION AGENCY
CINCINNATI, OHIO 45268

REVIEW NOTICE

The National Environmental Research Center -- Cincinnati has reviewed this report and approved its publication. Approval does not signify that the contents necessarily reflect the views and policies of the U.S. Environmental Protection Agency, nor does mention of trade names or commercial products constitute endorsement or recommendation for use.

FOREWORD

Man and his environment must be protected from the adverse effects of pesticides, radiation, noise and other forms of pollution, and the unwise management of solid waste. Efforts to protect the environment require a focus that recognizes the interplay between the components of our physical environment--air, water, and land. The National Environmental Research Centers provide this multidisciplinary focus through programs engaged in

- studies on the effects of environmental contaminants on man and the biosphere, and
- a search for ways to prevent contamination and to recycle valuable resources.

Sulfuric acid, the largest volume chemical manufactured in the Nation, is used in a broad range of industrial applications. Economical and environmentally sound disposal methods are still needed for the residual, contaminated acids which must be replaced by virgin acid. This project describes one approach developed within a major acid-using industry, the titanium dioxide pigment industry, to solve the disposal problem and simultaneously recover the acid for reuse.

A. W. Breidenbach, Ph.D.
Director
National Environmental
Research Center, Cincinnati

ABSTRACT

This report presents the results of a pilot program to demonstrate the technical feasibility of a novel approach to the recovery of sulfuric acid from waste streams. The process involves the total evaporation of the sulfuric acid and water in the waste stream to effect the removal of dry, free-flowing solids. The resultant acid-laden vapors are then partially condensed in multiple stages to yield a highly concentrated acid product which is suitable for reuse in the parent process.

The pilot plant was designed to process two tons per day of sulfuric acid (100% basis) from the waste stream of a titanium dioxide pigment plant. Spray evaporation effected the removal of 90% of the dissolved solids and subsequent condensation of the acidic vapors yielded a product acid having a concentration in excess of 85% H_2SO_4. This acid was upgraded to 95+% H_2SO_4 level through the addition of oleum and was satisfactorily used to digest titanium slag. Sulfuric acid mist and sulfur dioxide emissions were found to be of reasonable magnitude and were responsive to efforts to bring them into compliance with environmental standards.

Dry solids were generated at the rate of 0.66 kg/kg 100% H_2SO_4 processed. The recommendations point up the need to develop a satisfactory means of disposal of these highly soluble salts.

A commercial plant has been designed to process 345,000 metric tons annually of 19.5% H_2SO_4 waste end liquor from a 38,100 metric ton per year titanium dioxide plant. The estimated investment (as of January 1, 1975) for such a plant is $7,800,000. The operating costs would be approximately $77/metric ton (100% H_2SO_4 recovered) of which fuel and electrical costs would account for 48%.

This report was submitted in fulfillment of Project Number S-801349 of the Environmental Protection Agency.

CONTENTS

Abstract
List of Figures
List of Tables

Sections | Page

I. Conclusions and Recommendations..... 1

II. Introduction and Process Background..... 2

III. Summary..... 7

IV. Pilot Plant Design..... 11

1. Spray Evaporator-Burner..... 11
2. Cyclone..... 11
3. Partial Condensation Train..... 11
4. Mist Eliminators..... 21
5. SO_2 Scrubber..... 21

V. Procedures..... 23

1. Feed Preparation..... 23
2. Operating Procedures..... 23
3. Sampling of Stack Emissions..... 23
4. Special Analytical Techniques..... 24

VI. Discussion of Results..... 25

1. Acid Feed to the Spray Evaporator..... 25
2. Nature of the Dried Solids..... 26
3. Quality of the Product Acid..... 30
4. Acid Mist Elimination..... 33
5. Scrubbing for Removal of Sulfur Dioxide..... 34
6. Material Balance - Recovery and Loss of Sulfuric Acid..... 34
7. Heat Balance..... 35
8. Recovery of Sulfuric Acid from Pickle Liquor..... 36
9. Preconcentration of Waste Acid..... 38
10. Materials of Construction..... 39

VII. Design of Commercial Plant..... 41

References..... 43
Acknowledgments..... 44

FIGURES

No.		Page
1	Schematic Diagram of the New Jersey Zinc Process.....	3
2	Pilot Plant Flowsheet - Evaporative Recovery of Waste Sulfuric Acid.....	12
3	Spray Evaporator.....	13
4	Cyclone.....	14
5	Primary Condenser - Separator.....	15
6	Spray Tower.....	17
7	Venturi Scrubber.....	18
8	Two-Stage Condensation Train.....	19
9	Three-Stage Condensation Train.....	20
10	Two Plus-Stage Condensation Train.....	22
11	Product Acid Concentration as a Function of Condensation Stages and Outlet Temperature of Last Stage.....	32
12	Spray Evaporator Heat Load Vs. Feed Acid Concentration...	37

TABLES

No.		Page
1	Standardization of Oxalate Method for Determining Free Sulfuric Acid	24
2	Typical Feed Acid Compositions	25
3	Bulk Density of Dried Solids	26
4	Free Acid Occluded in Solids	27
5	Oxidation of Ferrous Iron	28
6	Solids Collection as a Function of Particle Size	29
7	Average Size Distribution of Dried Solids	29
8	Typical Analysis of Product Acid	31
9	Acid Mist Loadings in Stack Gas	33
10	Average Sulfuric Acid Losses	35
11	Basis for Determining Operating Cost	41
12	Energy and Materials Impact of Commercial Plant	42

I. CONCLUSIONS AND RECOMMENDATIONS

The technical objectives of the pilot plant program were satisfied. It was demonstrated that a solids-bearing sulfuric acid waste stream could be totally evaporated to effect removal of 90% of the solids and that the sulfuric acid vapors could be condensed to yield a highly concentrated product of strength and quality suitable for recycle to the digestion stage of a titanium pigment plant. In addition, this was accomplished without an inordinate loss of acid due to oxidation, decomposition, or simply as acid mist.

The results of the pilot program were sufficient to initiate the preliminary design of a commercial plant which it is estimated would cost $7,800,000. However, the viability of a recovery plant will be dependent upon the ability to satisfactorily dispose of the dried solids which are generated as a by-product. These materials are acidic, are water soluble and are produced at the rate of 0.66 kg for every kg of 100% H_2SO_4 which is fed to the evaporator. Although the solids disposal problem does not affect the technical feasibility of the process, it must be resolved before the process can be implemented commercially. Three possible approaches are: (1) partial recovery of useful metallic values, such as vanadium; (2) use as a flocculating agent in municipal sewerage treatment facilities; and (3) neutralization and treatment to insolubilize the metallic salts so that the resultant material can be used as landfill. For purposes of estimating plant capital and operating costs, total neutralization of the solids was assumed.

A second point which must be considered is the sensitivity of the process to the cost of fuel. The total direct and indirect costs associated with acid recovery amount to $77/MT of 100% H_2SO_4. At $7.95/MM kcal ($2.00/MM Btu) energy accounts for 48% of the total recovery cost. Since virtually no fuel is consumed in the production of virgin sulfuric acid from sulfur and metal sulfides, the evaporative recovery process is economically vulnerable to ever increasing fuel costs. It is recommended that this drain on energy resources be examined in detail as part of an overall study of the environmental impact of the recovery process.

Although no insurmountable process difficulties were encountered in the pilot program, scale-up to a commercial operation will require careful attention. This is particularly true in the areas of solids handling, overall acid-water balance, and emissions abatement. In addition, improved cyclone design is desirable to reduce the carryover of solids to the product acid and thereby minimize the potentially adverse effect of these solids on pigment quality.

II. INTRODUCTION AND PROCESS BACKGROUND

The economical recovery of useful sulfuric acid from waste streams has been of continuing concern to industry for many years, but it has received greater emphasis recently due to the imposition of Federal and State regulations on waste discharges. Domestic producers of titanium dioxide by the sulfate process are particularly aware of this problem since their process generates over 3-1/2 million metric tons annually of wastes containing 18-20% free sulfuric acid and 10-15% soluble sulfate salts. These salts, primarily of iron (4.1% $FeSO_4$), aluminum (2.9% $Al_2(SO_4)_3$) and magnesium (2.4% $MgSO_4$), contain minor quantities of vanadium, chromium and manganese which, if recycled, would be highly detrimental to pigment quality. Established techniques(1) for the recovery of acid, such as submerged combustion and multiple effect evaporation, have certain disadvantages when used to recover sulfuric acid at the 80-90% concentration level required for reuse in pigment plants:

a. The solubility of solid contaminants decreases with increasing acid concentration. This results in the precipitation of sulfates which must be removed from the acid liquor by filtration or by centrifugal separation.

b. The concentration of acid by liquid phase evaporation presents serious materials of construction problems. In multiple effect evaporation, for example, very expensive vessels are required to resist the corrosion encountered at or near the boiling point of sulfuric acid.

Because of these problems, processes to recover sulfuric acid from waste streams by means of concentration and separation have been limited in their application. Other commonly used techniques for the control of acid pollution from this and other industries include neutralization, ocean disposal and deep well disposal. However, these methods do not present attractive long-term solutions to the problem of acid disposal.

The New Jersey Zinc Company process(2) for evaporative recovery of sulfuric acid from solids-bearing sulfuric acid wastes (cf. Figure 1) is an attempt to circumvent the main problem areas cited above. In the first place, solids removal is accomplished by the total evaporation of finely atomized, waste acid feed to yield a dry, free-flowing product which can be readily removed from the vapor phase. This

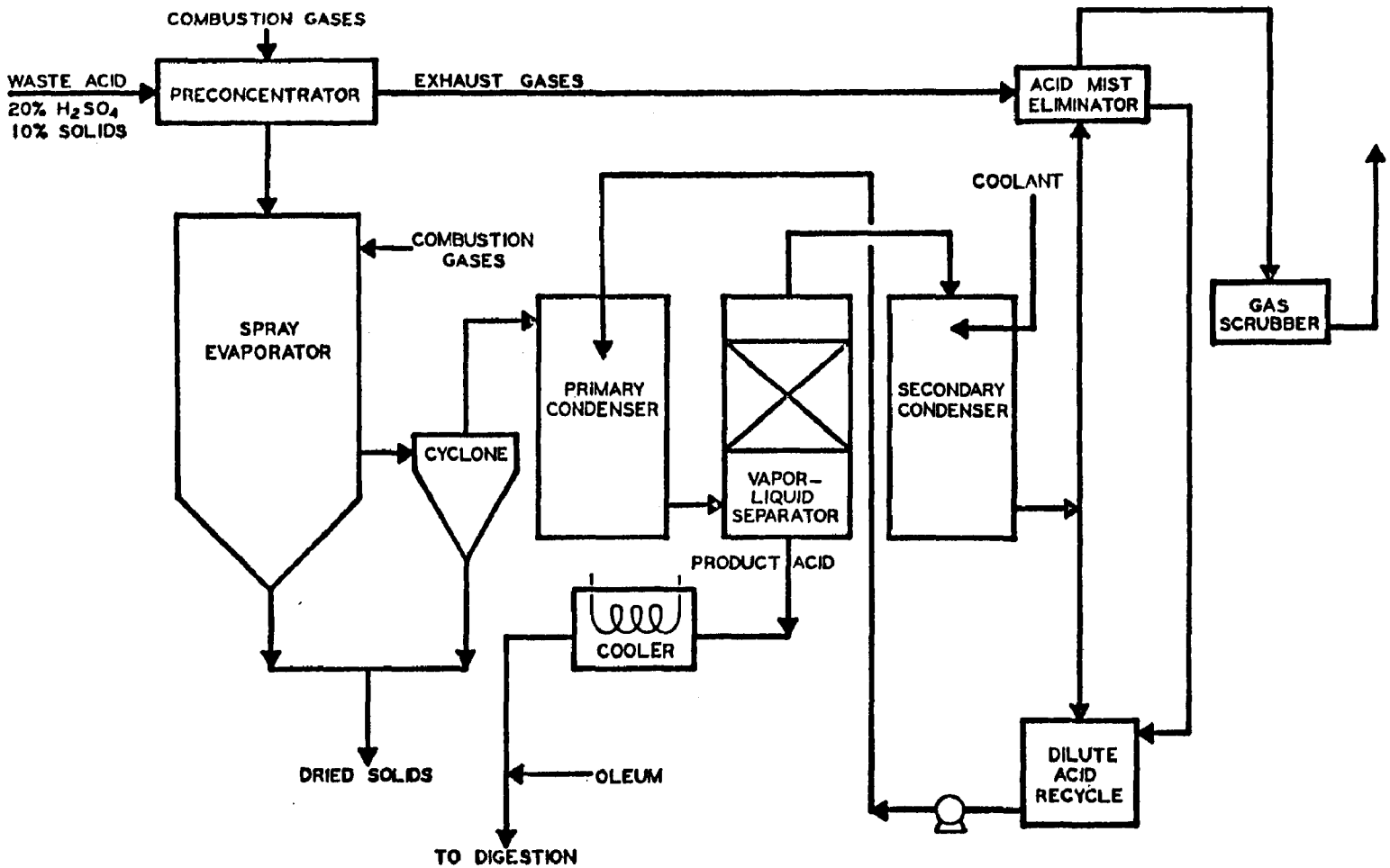

FIGURE 1. SCHEMATIC FLOWSHEET - WASTE ACID RECOVERY PROCESS

avoids filtration of precipitated solids and its attendant acid losses. Secondly, highly concentrated sulfuric acid is condensed from the vapor phase by direct cooling in refractory-lined vessels thereby obviating the need for expensive, corrosion-resistant heat transfer equipment.

The acid recovery process is best described by referring to the data established for a commercial-scale operation designed to handle waste acid from titanium slag digestion. For maximum fuel economy the waste sulfuric acid stream is preconcentrated by means of submerged combustion or venturi contactor(3) to achieve a target composition of 40% H_2SO_4 and 23% solids. At this concentration and the operating temperature of the preconcentrator, the waste stream is still single phase and no solids separation is encountered. This stream is then evaporated in a spray evaporator to yield a vapor stream theoretically containing 0.136 kg H_2SO_4/kg dry gas and 0.171 kg H_2O/kg dry gas.

After removal of solids, this vapor stream, which has a sulfuric acid dew point of approximately 215°C, enters a refractory-lined condensation chamber at a temperature of about 315°C where it is cooled by the direct introduction of a finely atomized dilute acid stream recirculated from a secondary condenser. The rate at which this recycled coolant is introduced depends on the approach to thermal equilibrium in the condensers and the operating temperature of the secondary condenser or spray tower. Under conditions of ideal vapor-liquid equilibrium and an outlet temperature of 80°C, the recycled coolant is returned at a theoretical rate of 0.024 kg H_2SO_4/kg dry gas and 0.103 kg H_2O/kg dry gas. Thus, the overall acid-water composition in the primary condenser is 0.160 kg H_2SO_4/kg dry gas and 0.274 kg H_2O/kg dry gas. At vapor-liquid equilibrium, 85% of the sulfuric acid will condense at an overall concentration of 87% H_2SO_4. The exit gas, which is at its acid dew point, contains 0.024 kg H_2SO_4/kg dry gas and 0.254 kg H_2O/kg dry gas. This exit gas then passes to the secondary condenser (and mist eliminator) which serves to recover virtually all of the remaining acid by cooling the gases to a stack temperature of 80°C.

In this approach to acid concentration, the partial condenser and its vapor-liquid separator are the only vessels where hot, concentrated sulfuric acid is present. These vessels can be readily constructed of acid-resistant brick overlaying a lead membrane, thereby substantially reducing the problems associated with acid corrosion.

The partial condensation technique employing two stages theoretically permits recovery of acid having a concentration of 90% H_2SO_4.

This can be done while maintaining the heat removal and water balance necessary to assure that there is essentially no acidic effluent other than the concentrated product.

Bench-scale work using solids-free sulfuric acid confirmed the fundamentals of this approach. However, several aspects remained to be resolved by a pilot plant demonstration. These included the following:

a. The oxidation of ferrous iron to the ferric state. This readily occurs in the presence of sulfuric acid and oxygen as indicated by the following chemical reactions:

   (1) $2FeSO_4 + 2H_2SO_4 \rightarrow Fe_2(SO_4)_3 + SO_2 + 2H_2O$

   (2) $2FeSO_4 + H_2SO_4 + \frac{1}{2}O_2 \rightarrow Fe_2(SO_4)_3 + H_2O$

   Since sulfur dioxide is a product of reaction (1), iron oxidation is an important environmental consideration.

b. The characteristics of the dried solids. The bulk density, flowability, and the quantity of occluded free acid had to be established.

c. The differences between waste acid from ilmenite digestion and waste acid from titanium slag digestion. The former has a higher ferrous iron content (8.1% $FeSO_4$ as opposed to 4.1%) and this might be significant in terms of sulfur dioxide emissions resulting from oxidation.

d. The quality of the product acid. Both the solids content and the H_2SO_4 concentration of the product acid are of major importance in determining the suitability of the product for reuse in the pigment process.

e. The acid mist emissions. It had been speculated that large quantities of sulfuric acid would be lost as acid mist.

f. The vapor-liquid equilibrium and water balance. The condensation of high concentration sulfuric acid must involve an efficient transfer of heat

from the liquid to the vapor phase. If this is not satisfactorily attained, water balance problems will prevent the desired acid concentration from being reached.

These were the primary areas of interest in the pilot plant program, and it was for the purpose of resolving these points that the demonstration unit was constructed and operated.

III. SUMMARY

The piloting of The New Jersey Zinc Company process was done at Palmerton, Pennsylvania, at a rate of two tons of 100% H_2SO_4 per day. The operations were carried out as part of a joint effort of The New Jersey Zinc Company and Montedison S.p.A. of Italy, and with the support of the United States Environmental Protection Agency. The plant operated on waste sulfuric acid feed for a cumulative total of 900 hours. The pertinent results from this period of operation are summarized below.

1. ACID FEED AND PRECONCENTRATION

A typical sample of waste acid containing 18% H_2SO_4 and 11% dissolved solids was obtained from The New Jersey Zinc Company titanium pigment plant at Gloucester City, New Jersey. This acid, which resulted from titanium slag digestion, was processed in the as-received condition and was also synthetically preconcentrated to 35% H_2SO_4 for evaluation at this higher acid level. In addition, a waste acid typical of that from ilmenite digestion was synthesized by adding copperas ($FeSO_4 \cdot 7H_2O$), epsom salt ($MgSO_4 \cdot 7H_2O$), and virgin sulfuric acid to Gloucester City end liquor. This was evaluated at a nominal concentration of 30% H_2SO_4 and 17% dissolved solids.

Although preconcentration of the feed acid is necessary and desirable from an economic standpoint, this aspect of the process was not integrated into the Palmerton pilot plant since technology exists to accomplish this objective. However, tests were carried out at the Selas Corporation pilot facilities in Dresher, Pennsylvania, to determine stack emissions and iron oxidation, as well as to observe the physical characteristics of the acid at various levels of preconcentration. No appreciable iron oxidation occurred and the acid mist was amenable to control. However, some difficulty was encountered when solids periodically blocked part of the concentrator throat. This resulted in a marked increase in pressure drop and an attendant decrease in throughput. This problem will have to be resolved before this approach can be successfully incorporated into the recovery process.

2. DRIED SOLIDS

Dry, free-flowing solids were produced in the spray evaporation and 90% of these solids were removed from the sulfuric acid vapor stream. The characteristics of the solids are summarized below:

	From Titanium Slag	From Ilmenite
Apparent Bulk Density (g/cc)	0.41	0.45
Occluded H_2SO_4 (% by Weight)	11.3	5.6
Iron Oxidation:		
% of Ferrous to Ferric	66	52
% Oxidized by Air	57	38
% Oxidized by H_2SO_4	43	62

The presence of larger amounts of occluded sulfuric acid in the solids from slag digestion is due to the presence of aluminum sulfate which readily forms an acid salt. However, this higher free acid content did not appreciably affect the flow of the solids under normal operating conditions.

3. PRODUCT ACID QUALITY

The presence of vanadium, chromium and manganese in the product acid can be detrimental to pigment quality if the recovered acid is recycled for digestion. The product acid contained only small quantities of these contaminants as shown below:

Product Acid from Slag End Liquor

H_2SO_4.....	80.8%
H_2O.....	13.2
$FeSO_4$.....	0.8
$Fe_2(SO_4)_3$.....	1.8
$Al_2(SO_4)_3$.....	1.5
$TiOSO_4$.....	0.6
$MgSO_4$.....	1.2
$VOSO_4$.....	0.083
$Cr_2(SO_4)_3$.....	0.045
$MnSO_4$.....	0.027

Laboratory digestions were made with product acid which was strengthened by the addition of 20% oleum. No adverse effects were observed in digestion, filtration or in the recovery of titanium dioxide when compared with the use of virgin acid. However, no pigment was ever produced from the trial digestions and hence no conclusions can be drawn as to pigment quality or the effect of continued recycle on acid quality.

4. STACK EMISSIONS

The presence of sulfuric acid mist in the stack gas (after the mist eliminator) varied inversely with stack temperature over the range

73°C to 92°C. At the lower temperature, the mist averaged 645 mg/m^3 (510 → 810 mg/m^3), while at the higher temperature it was 250 mg/m^3 (170 → 400 mg/m^3). This difference can be attributed to the presence of "water mist" at lower temperatures which effectively competes with acid mist for condensation sites. The acid mist elimination efficiency ranged from 80% at 73°C to 98% at 92°C. The mist loadings were in excess of the established target of 80 mg/m^3. A higher efficiency mist eliminator would be required to reduce the loadings to the target level.

Due to differences in iron content, sulfur dioxide emissions averaged 555 ppm for slag acid (149-932 ppm) and 865 ppm for ilmenite acid (363-1674 ppm). The stack gases were scrubbed with a 5 wt. % slurry of lime across a pressure drop of 125 mm H_2O and the emissions were reduced to 285 ppm and 290 ppm, respectively. The L/G ratio averaged 3.2 (m^3 slurry/1000 actual m^3 of gas).

5. ACID RECOVERY AND LOSSES

The overall recovery of sulfuric acid as product differed only slightly for slag and ilmenite feeds. The losses are summarized below:

Average Acid Losses and Recovery

% H_2SO_4 As	Using Slag Acid	Using Ilmenite Acid
Free Acid in Solids	8.2	3.8
Iron Oxidation	4.6	5.8
Sulfur Dioxide	2.5	4.2
Acid Mist	0.5	0.6
Recovered as Product	84.2	85.6

6. HEAT BALANCE

The spray evaporation of waste acid which had been previously preconcentrated to 35% H_2SO_4 required 2200 kcal/kg H_2SO_4 in the feed. Preconcentration of the as-received 20% acid to this 35% level by submerged combustion was calculated to require an additional 2000 kcal/kg H_2SO_4. On the basis of an average 85% recovery of H_2SO_4 as useful product, the overall heat requirement is 5060 kcal/kg 100% H_2SO_4 recovered from the original waste stream. Since submerged combustion is thermally more efficient than spray evaporation, the heat duty can be reduced to 4560 kcal/kg if the feed acid can be preconcentrated to 40% H_2SO_4 prior to spray evaporation.

7. SPRAY EVAPORATION OF STEEL PICKLING LIQUOR

The spray evaporation of waste pickle liquor (2.1% H_2SO_4, 18.5% $FeSO_4$) resulted in poor acid recovery. The high iron content of the feed resulted in a 46% loss of the sulfuric acid to ferric sulfate and sulfur dioxide. Crystallization and separation of copperas ($FeSO_4 \cdot 7H_2O$) would be necessary prior to spray evaporation to minimize oxidation to ferric iron and to ensure better acid recovery.

8. MATERIALS OF CONSTRUCTION

Evaluations were made of the numerous materials used in the construction and operation of the pilot plant. Plastics (including fiber reinforced materials), lead and acid-resistant alloys were suitable in applications where acid concentration was less than 50% H_2SO_4 and temperatures were below 120°C. At higher acid concentrations and temperatures, acid-resistant refractory, high silicon iron and Teflon linings were satisfactorily employed.

9. COMMERCIAL PLANT DESIGN

A design was prepared for a commercially sized recovery plant to process 345,000 metric tons annually of 19.5% H_2SO_4 waste liquor from a 38,100 metric ton per year titanium dioxide plant. The capital as of January 1, 1975, was estimated at $7,800,000. The operating costs were estimated to be $77/metric ton of recovered 100% sulfuric acid.

IV. PILOT PLANT DESIGN

The pilot plant was designed, constructed and made ready for operation in the period February to June 1972. Several minor modifications were subsequently made to improve performance. Only the basic components of the final design configuration are reported here (see Figure 2).

1. SPRAY EVAPORATOR-BURNER

The refractory-lined spray evaporator (Figure 3) was 1.8 meters in diameter and had a 6.1 meter high straight wall. The shell was constructed of Cor-Ten steel over which insulating refractory and a monolithic, acid-resistant refractory lining (Sauereisen Cements Co. #54) was gunned. The shell exterior was insulated to minimize heat loss. Combustion gases were supplied to the evaporator from a 189,000 kcal/hour natural gas burner operating at a nominal temperature of 1000°C and at an inlet pressure of 760 mm H_2O. The acid feed to the evaporator was introduced through a Delavan two-fluid atomizing nozzle which was operated at a nominal air pressure of 3.5 kg/cm^2. Dried solids were collected batchwise at the bottom of the evaporator in a heated steel drum. The exhaust gases passed through an unlined Cor-Ten steel duct.

2. CYCLONE

The exhaust gases from the spray evaporator were sent to a cyclone (Figure 4) for removal of entrained solids. The cyclone was constructed of Cor-Ten steel and was unlined. The exterior was insulated to minimize heat loss and to maintain the gas temperature above the acid dew point. In a manner similar to the evaporator, the dried solids were collected at the bottom of the cyclone in a heated steel drum.

3. PARTIAL CONDENSATION TRAIN

The condensation train consisted of three vessels - the primary condenser, the separator and the spray tower. These vessels are described below.

A. Primary Condenser

The primary condenser (Figure 5), whose function it was to provide residence for cooling and condensation of the acid-laden gases from the evaporator, was fabricated of Cor-Ten steel. It was lined with

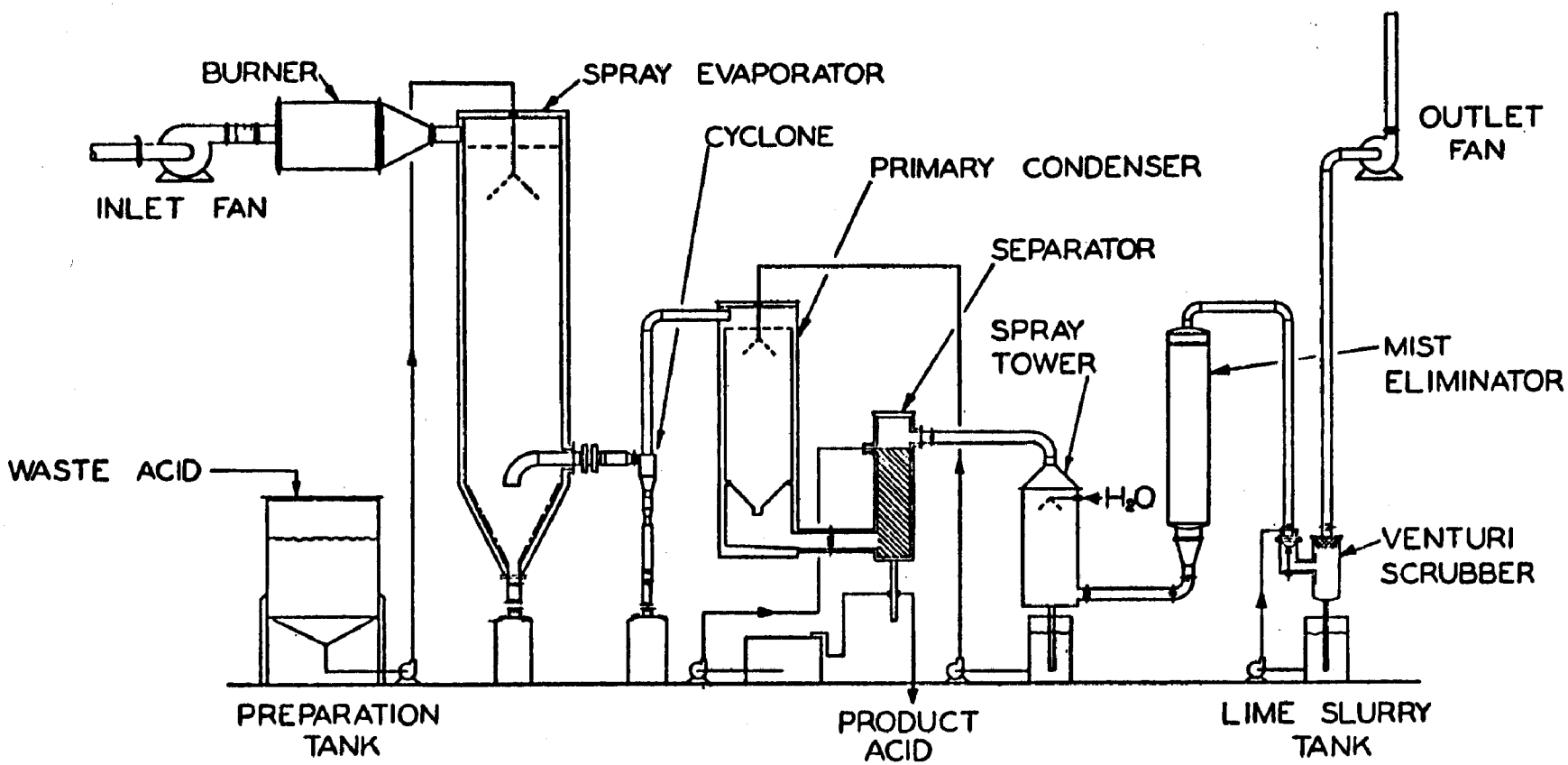

FIGURE 2. PILOT PLANT FLOWSHEET - EVAPORATIVE RECOVERY OF WASTE SULFURIC ACID

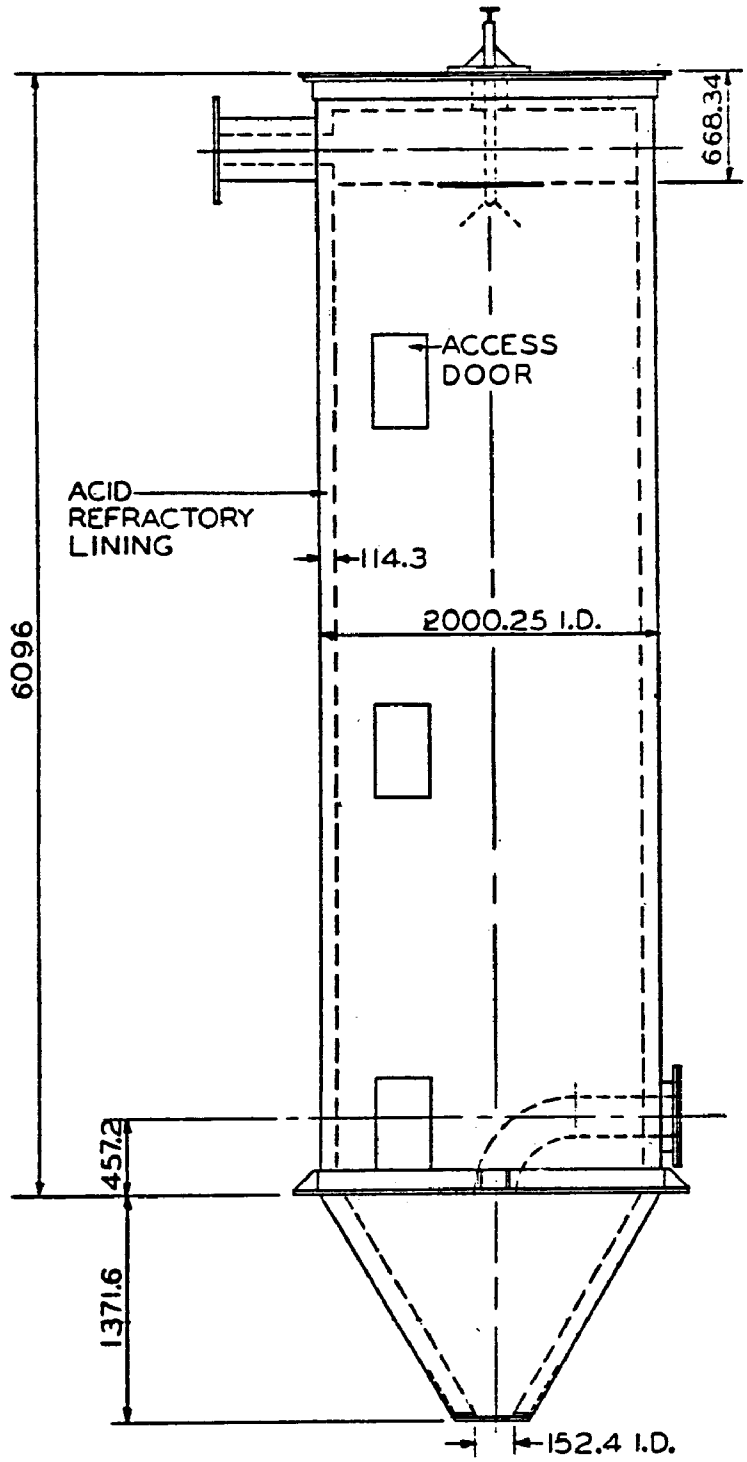

ALL DIMENSIONS IN MM.

FIGURE 3. SPRAY EVAPORATOR

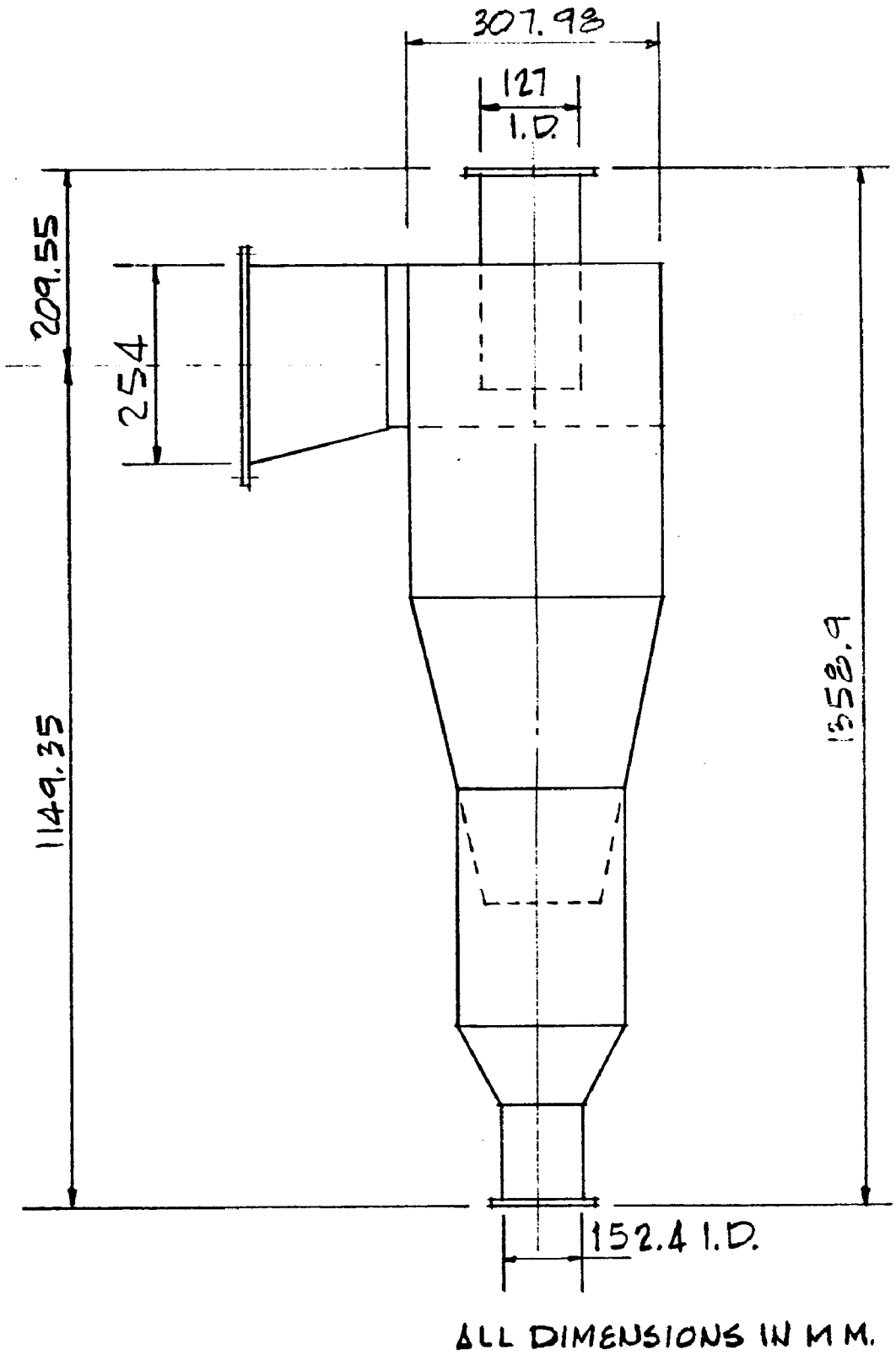

FIGURE 4. CYCLONE COLLECTOR

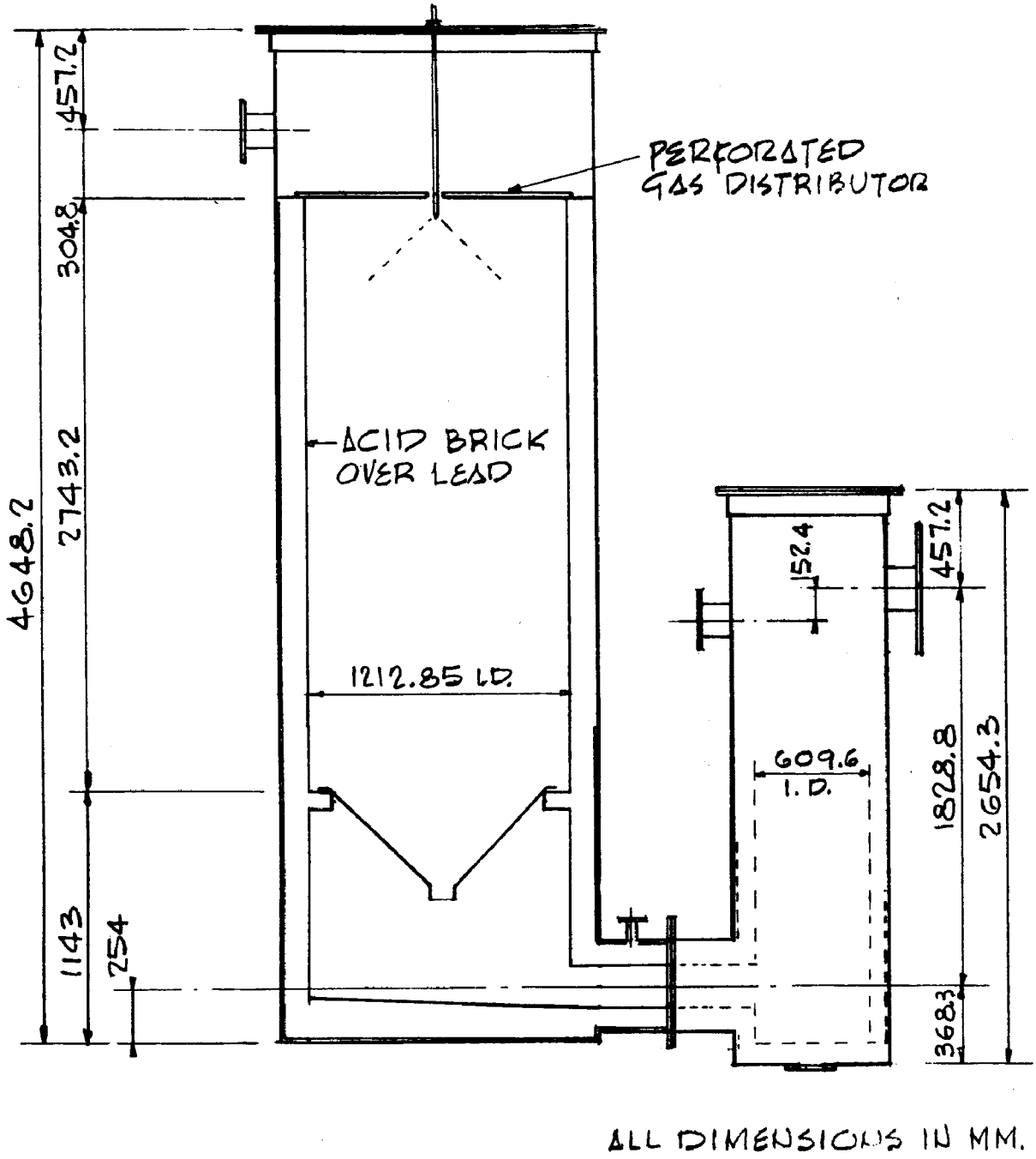

FIGURE 5. PRIMARY CONDENSER - SEPARATOR

acid-resistant brick (using a silicate mortar) over a lead membrane 4 mm thick. The dilute acid which was recycled from the spray tower was introduced into the condenser by means of a two-fluid Delavan atomizing nozzle. A venturi throat, which for pilot plant purposes was constructed of lead-lined steel, was installed in the condenser as a contactor to improve the approach to vapor-liquid equilibrium. The pressure drop across the venturi was nominally 100 mm of water. The exterior of the condenser was insulated to minimize heat losses.

B. Separator

The separator (Figure 5) served to disentrain acid droplets from the vapor phase and to improve the approach to vapor-liquid equilibrium. The shell was of Cor-Ten steel over which was installed a lead membrane and monolithically cast acid-resistant refractory. The vessel was packed to a depth of one meter with 25 mm berl saddles. The exterior of the separator was insulated to minimize heat losses.

C. Spray Tower

The spray tower (or secondary condenser) (Figure 6) was installed after initial efforts using a venturi scrubber to cool the exhaust gases from the separator proved unsatisfactory. The venturi scrubber (Figure 7) was found to saturate the gas stream with water mist which impaired the acid mist collection efficiency. The spray tower, fabricated of lead-lined Cor-Ten steel and equipped with a single Spraying Systems 1/4-JAC two-fluid nozzle, was installed to permit operation at a temperature above the saturation point of the exit gas. Furthermore, it provided operating latitude with regard to the overall water balance on the process.

The vessels in the condensation train were grouped in three different configurations to evaluate alternate condensation approaches. The first of these is shown in Figure 8 and consisted of two stages - one being the primary condenser and separator, and the second being the spray tower. Dilute acid (approximately 20% H_2SO_4) was recycled from the spray tower to the primary condenser to effect the cooling and condensation of the acid vapors.

The second condensation configuration utilized three condensation stages as shown in Figure 9. In this approach, the spray nozzle in the primary condenser was replaced by a venturi throat and the concentrated product acid was recycled to this throat as a coolant at the rate of 15-40 liters per minute. Although some heat was lost from the pumps and piping, the system was basically adiabatic.

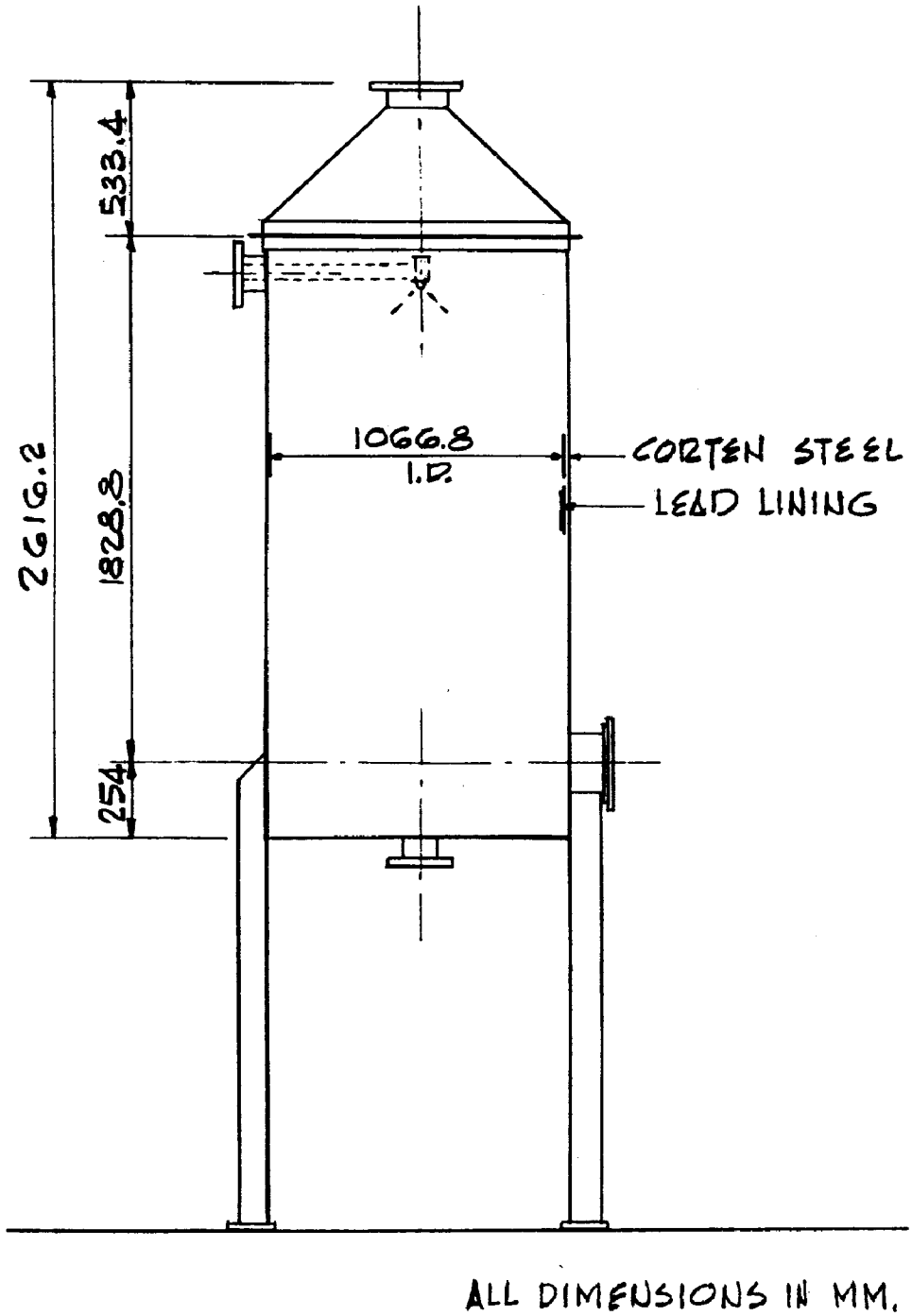

FIGURE 6. SPRAY TOWER

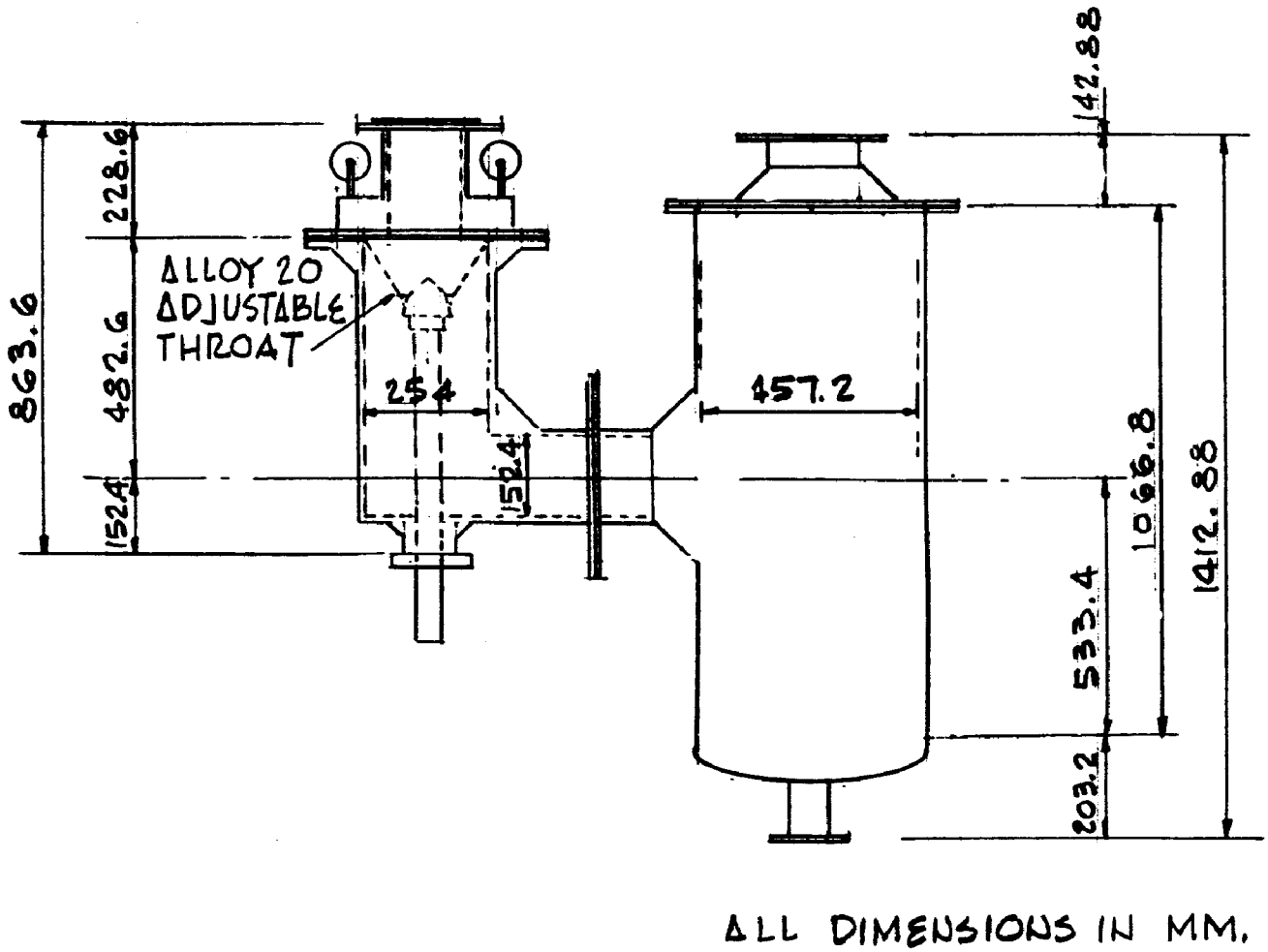

FIGURE 7. VENTURI SCRUBBER

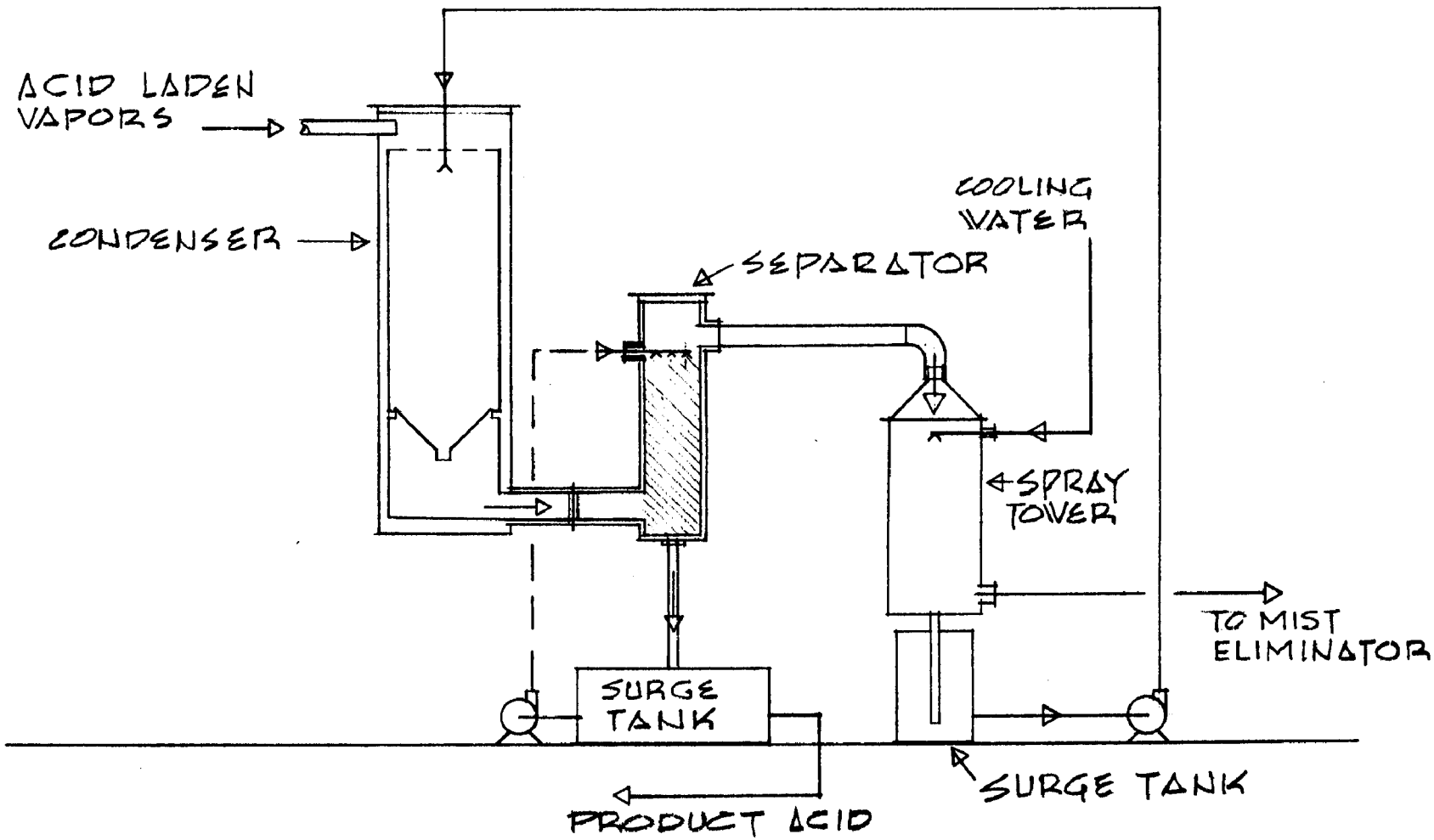

FIGURE 8. TWO-STAGE CONDENSATION TRAIN

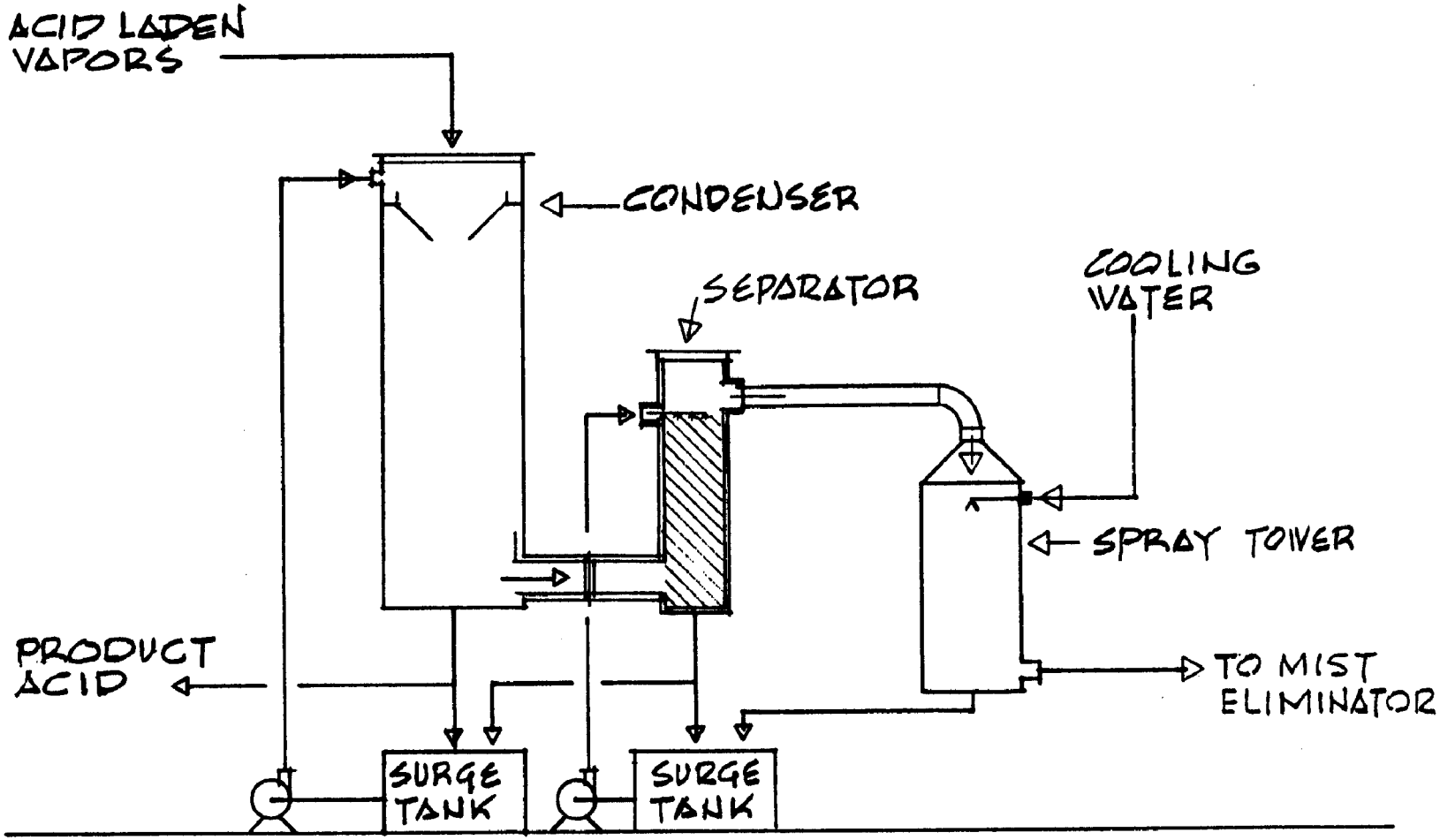

FIGURE 9. THREE-STAGE CONDENSATION TRAIN

The third condensation configuration (Figure 10) was an attempt to minimize the number of pumps used in the condensation train. This approach, which was referred to as having two-plus condensation stages, split the acid recycle between the venturi throat and the tower packing. The total flow of recycled acid was approximately 40 liters per minute and was divided about equally between the two vessels.

4. MIST ELIMINATORS

The initial design of the pilot plant relied upon Teflon pad mist eliminators for acid mist control. These pads, which were 76 mm thick, were evaluated at linear flow rates of 2.4 to 7.6 meters per second and were found to be unable to reduce the acid mist loadings to reasonable levels. A Brink Test Unit TU-102E was purchased from the Enviro-Chem Systems division of Monsanto and was installed. This unit was constructed of fiber reinforced polyester resin and was designed for a mist elimination efficiency of 99%. This design factor includes both acid mist and so-called water mist which is present in gas streams close to the saturation temperature. Thus, the sulfuric acid mist elimination will be less than the design factor if the gas stream contains significant quantities of water vapor.

5. SO_2 SCRUBBER

The venturi scrubber (Figure 7) which was initially used to cool the separator exit gases (and which was replaced for this purpose by the spray tower) was evaluated as a scrubbing device to remove sulfur dioxide from the exhaust gases. The scrubber body was fabricated of fiber reinforced polyester and had an adjustable throat of Alloy 20 steel. The pressure drop across the venturi was capable of being adjusted between 100 and 400 mm of water, although limitations on fan capacity restricted operation to a lower pressure drop of 100-125 mm H_2O. The flow rate of liquid to the throat was 35-40 liters per minute.

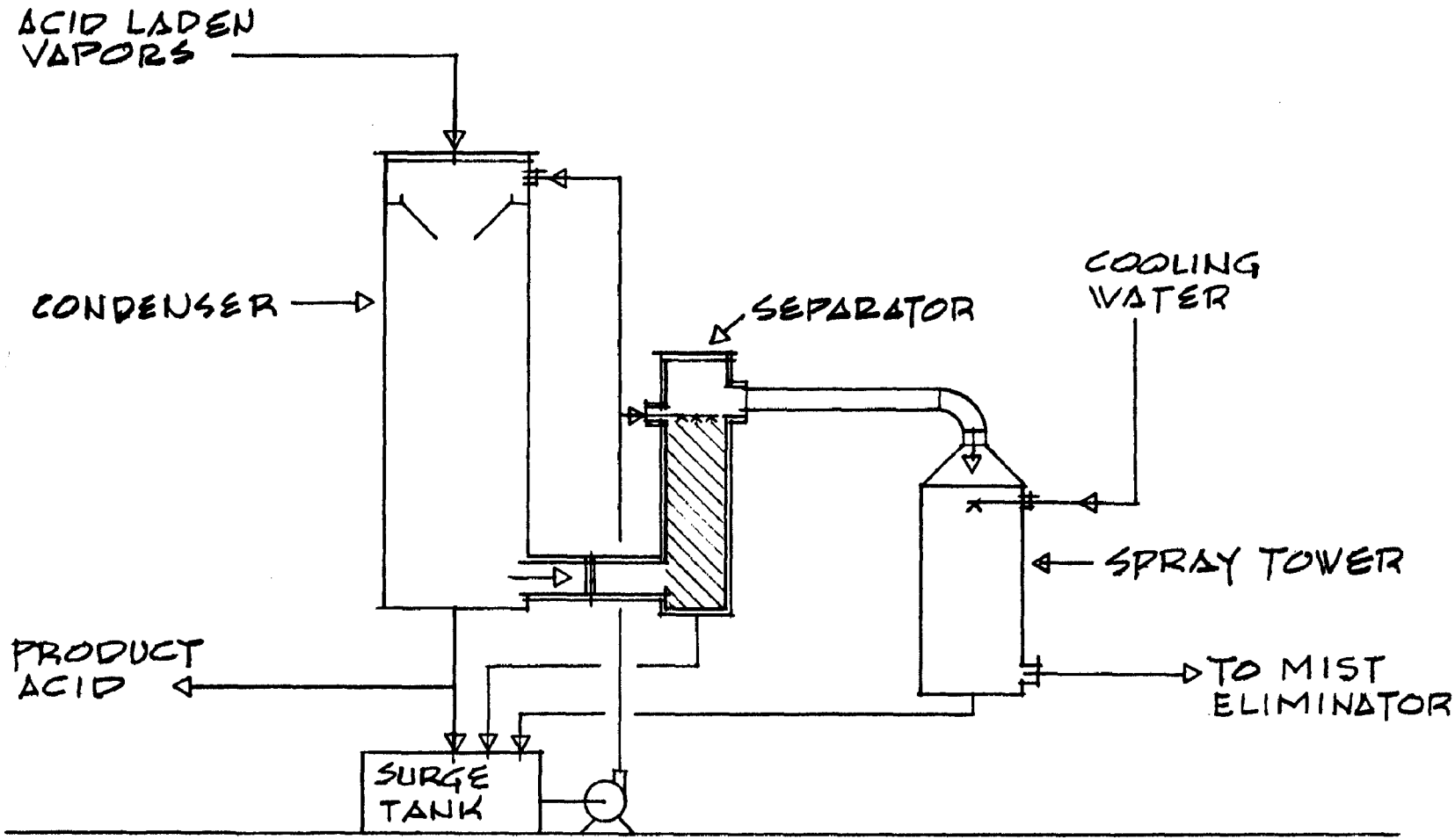

FIGURE 10. TWO-PLUS-STAGE CONDENSATION TRAIN

V. PROCEDURES

1. FEED PREPARATION

Waste sulfuric acid from the Gloucester City, New Jersey plant of New Jersey Zinc was shipped to Palmerton by tank trailer and stored on site in a 6,000-gallon, rented stainless steel tank trailer. From here it was transferred to a 2,000-gallon, lead-lined tank for use in the pilot plant. It was in this tank that synthesized ilmenite acid was also prepared. This was accomplished with the use of virgin acid and dried metallic salts in addition to the waste liquor. The tank was equipped with lead coils for heating or cooling the acid as it was prepared.

2. OPERATING PROCEDURES

The pilot plant was prepared for operation by preheating the spray evaporator to 850-900°C gas inlet temperature and 330-350°C outlet temperature. The outlet temperature was maintained by spraying water (instead of acid) into the evaporator. The acid surge tanks and recycle tanks were filled with acid approximating the anticipated strength of the various outlet streams in order to minimize the time necessary to come to steady state.

Upon reaching the desired operating temperatures, the water feed to the evaporator was discontinued and acid feed was commenced. Levels were measured in the various tanks and samples were taken for material balance purposes. Operating data, such as pressures, temperatures, tank levels and acid strengths were monitored and logged by the operator once an hour. A continuous chart record of all operating temperatures was also maintained. Samples of product streams and recycle streams were composited by shift. Solids flowed continuously into 55-gallon drums mounted beneath the evaporator and cyclone. Drum warmers were used to maintain the drums at temperatures in excess of 225°C in order to minimize acid condensation in the drums. Upon termination of the run, samples and measurements were taken for material balance purposes.

3. SAMPLING OF STACK EMISSIONS

Sulfur dioxide and sulfuric acid mist emissions were monitored with stack sampling equipment. Method 8 of the EPA (Federal Register, Vol. 36, No. 247, December 23, 1971) was used to determine sulfuric acid mist and sulfur dioxide. However, since this technique required at least two hours to obtain a representative sample, the more convenient Brink Model BMS-10 Sampling Kit by Monsanto was used to obtain more frequent acid mist determinations.

4. SPECIAL ANALYTICAL TECHNIQUES

The presence of salts in the feed and product acid (particularly iron salts) interfered with the determination of the free sulfuric acid level in samples. Free acidity was determined in the following manner(4):

a. Two grams of sodium oxalate ($Na_2C_2O_4$) was dissolved in 100 ml of water and the pH adjusted to 7.0.

b. A 0.2-1.0 gram sample for analysis was dissolved in the oxalate solution and was titrated potentiometrically with 0.2 N NaOH to a pH of 7.0.

c. The end point of the free acid titration was taken as the inflection point in the graph of pH versus ml of NaOH solution.

The accuracy of this method for determining free acid is summarized for various synthesized acids in Table 1.

Table 1. STANDARDIZATION OF OXALATE METHOD FOR DETERMINING FREE SULFURIC ACID

	% H_2SO_4		%
	Actual	Oxalate Method	Error
20% Acid with Solids "A"	19.98	19.54	-2.20
45% Acid with Solids "B"	44.96	44.74	-0.49
55% Acid with Solids "C"	54.94	55.44	+0.91
65% Acid with Solids "D"	64.90	65.11	+0.32

	% MSO_4 in Above Solutions			
MSO_4	A	B	C	D
$FeSO_4$	5.12	0.53	0.65	0.77
$Fe_2(SO_4)_3$	--	1.05	1.28	1.51
$Al_2(SO_4)_3$	1.90	0.74	0.90	1.06
$MgSO_4$	2.80	1.46	1.78	2.11
$TiOSO_4$	1.00	0.74	0.90	1.06

The compositions in Table 1 were chosen because they were typical of acids which were encountered in the course of pilot plant operation. No further significance should be attributed to them.

Samples of solids were also analyzed for free acid content using the oxalate method. Standard wet chemical analytical methods were used for iron, aluminum, magnesium and other components.

VI. DISCUSSION OF RESULTS

For each run made during the pilot plant campaign, evaluations were made of variations in acid feed composition, operating temperatures and methods of acid condensation. The results of these evaluations are discussed below.

1. ACID FEED TO THE SPRAY EVAPORATOR

The compositions of waste acid streams from sulfate TiO_2 plants vary because of the titanium raw materials used in the digestion. The two primary sources of titanium, Sorel slag and ilmenite, have substantial differences in the ratio of iron to titanium dioxide (approximately 0.14 and 0.5, respectively) thereby requiring individual evaluation of their corresponding end liquors. Slag-type end liquor was made available from the Gloucester City operations of The New Jersey Zinc Company and this was transported to the pilot plant site by tank trailer. Ilmenite end liquors were synthetically prepared from the slag end liquor, virgin acid and the appropriate metallic salts. The compositions of typical acid feeds which were atomized in the spray evaporator are listed in Table 2.

Table 2. TYPICAL FEED ACID COMPOSITIONS

Composition Weight %	Slag End Liquor		Ilmenite End Liquor
	As Received	Preconcentrated	Preconcentrated
Free H_2SO_4	18.4	35.0	29.3
Total SO_4	26.5	50.4	40.6
Fe	1.59	3.02	3.90
Mg	0.67	1.27	0.79
Al	0.35	0.67	0.18
Ti	0.28	0.53	0.18
V	0.044	0.084	0.024
Cr	0.021	0.040	0.009
Mn	0.022	0.042	0.010
Water (Difference)	70.6	44.0	54.3

Preconcentrated acid feeds were prepared to nominal levels of 30% H_2SO_4 for ilmenite liquor and 35% H_2SO_4 for slag liquor. Care was taken not to exceed these levels to minimize the precipitation of salts, and the feed temperature was maintained at 70-80°C to assure maximum solubility.

2. NATURE OF THE DRIED SOLIDS

A. General

In most spray evaporation processes, the dried solids represent the desired product. However, in the waste acid recovery process, these solids are of secondary importance to the sulfuric acid. Nonetheless, since they do constitute a significant percentage of the total weight of processed material, they must receive careful attention. For example, for every 100 kilograms of 100% sulfuric acid present in the feed liquor, there are almost 60 kilograms of metallic salts present. Furthermore, after spray evaporation, some iron is oxidized and some free acid remains occluded in the solids, thereby increasing the total weight of solids to as much as 70 kilograms per 100 kg H_2SO_4. Thus, these solids are a considerable by-product of sulfuric acid recovery.

B. Bulk Density

The bulk density of the dried solids varied for the different acid feeds, being somewhat higher for ilmenite solids as opposed to slag solids. This can be attributed to the higher iron content of the ilmenite solids. The bulk densities are summarized in Table 3. Variations in bulk density of solids for a given feed are attributable to differences in size distribution and free acid content. In general, solids with high free acid contents had higher bulk densities than solids with low free acid contents.

Table 3. BULK DENSITY OF DRIED SOLIDS
(grams/100 cc)

From Slag End Liquor	Range	Average
Spray Evaporator Solids	28 → 54	43
Cyclone Solids	20 → 37	33
Composite Solids	--	41
From Ilmenite End Liquor		
Spray Evaporator	45 → 54	49
Cyclone	32 → 36	35
Composite	--	45

C. Free Acid in the Dried Salts

The extent to which free sulfuric acid is occluded in the dried solids varied with acid feed and operating conditions, and the data are summarized in Table 4. The higher free acid content of the slag based solids is attributed to the greater quantity of aluminum sulfate present in the slag end liquor. Aluminum sulfate forms a relatively stable double salt of $Al_2(SO_4)_3$ and H_2SO_4 in the presence of sulfuric acid, while iron and magnesium do not.

Table 4. FREE ACID OCCLUDED IN SOLIDS

	Weight % Free H_2SO_4	
	Range	Average
From Slag End Liquor		
Spray Evaporator Solids	9.8 → 16.6	14.1
Cyclone Solids	4.2 → 15.3	9.9
Composite Solids	--	11.3
From Ilmenite End Liquor		
Spray Evaporator Solids	1.4 → 13.1	7.5
Cyclone Solids	1.2 → 8.9	4.3
Composite Solids	--	5.6

The "acid dryness" of the solids is also affected by operating conditions. Higher atomizing pressures produced finer and drier particles than did low atomizing pressures. In one run, the solids collected from the evaporator at 3.5 kg/cm^2 (50 psi) atomizing pressure had 6.8% free sulfuric acid while evaporator solids at 1.75 kg/cm^2 (25 psi) contained 15.7% acid. The corresponding cyclone-collected solids contained 3.5% and 5.0% free acid, respectively. (However, the degree of iron oxidation from ferrous to ferric increased with increasing atomizing pressure - with 34% of all ferrous iron being oxidized at 1.75 kg/cm^2 and 40% being oxidized at 3.5 kg/cm^2. Furthermore, high atomizing pressures generally resulted in greater quantities of solids in the product acid.)

The outlet temperature of the spray evaporator was also a factor in determining the amount of free acid in the solids. However, while occluded acid losses were observed to decrease with increasing evaporator temperature, iron oxidation and sulfur dioxide formation were observed to increase.

D. Oxidation of Iron

The oxidation of ferrous iron in the spray evaporator can proceed in two ways(4),(5):

$$(1) \quad 2FeSO_4 + 2H_2SO_4 \rightarrow Fe_2(SO_4)_3 + SO_2 + 2H_2O$$

and

$$(2) \quad 2FeSO_4 + H_2SO_4 + \tfrac{1}{2}O_2 \rightarrow Fe_2(SO_4)_3 + H_2O$$

The degree to which each of these reactions takes place can be established by measuring the ferrous and ferric iron contents of the dried solids and by observing the SO_2 in the stack gas. The oxidation of the iron in the solids to the ferric state is summarized in Table 5. This table shows that two-thirds of the iron present in slag based liquor is oxidized while only slightly more than one-half of the iron in ilmenite liquor is oxidized. However, since the iron content of the ilmenite feed acid on the average was about one-third greater than the iron content of the slag feed acid, the iron oxidation rates were about equal.

Table 5. OXIDATION OF FERROUS IRON

	% of Iron Oxidized to Ferric State	
	Slag-Acid	Ilmenite-Acid
Spray Evaporator Solids	67	58
Cyclone Solids	65	47
Composite Solids	66	52
Oxidized by H_2SO_4*	43	62
Oxidized by Air	57	38

*Determined from amount of SO_2 present in the stack gas.

The mechanism of oxidation differed for the two acid feeds. Whereas slag based acid appeared to favor oxidation by air (reaction 2), ilmenite based acid favored oxidation by sulfuric acid (reaction 1). An explanation for this behavior was not apparent.

E. Particle Size Distribution

The particle size distribution of the dried solids was dependent upon the atomizing nozzle, atomizing pressure, and feed rate (or air-to-liquid ratio). Using the 1/4" atomizing nozzle, the ratio of cyclone solids-to-evaporator solids averaged 1.2. With the 3/8" nozzle, the

average ratio was 1.8. At an acid rate of 159 kg per hour, for example, the air-to-liquid ratio was twice as great in the 3/8" nozzle as in the 1/4" nozzle.

Finer particle size distribution at the atomizing nozzle is desirable from the standpoint of evaporation rate. However, cyclone efficiency and total solids removal from the acid suffers as particle distribution becomes finer. This is shown in Table 6.

Table 6. SOLIDS COLLECTION AS A FUNCTION OF PARTICLE SIZE

Ratio of Cyclone Solids to Evaporator Solids	% Cyclone Efficiency	% of Solids Removed From Acid*
1.20	89	94
1.75	81	87

*Evaporator solids and cyclone solids combined.

However, samples of solids obtained with the 1/4" nozzle were examined by optical microscopy and with an electron microscope and a particle count was made on each sample. The average results are summarized in Table 7.

Table 7. AVERAGE SIZE DISTRIBUTION OF DRIED SOLIDS

Diameter	Particle Frequency (%)	Weight (%)
Evaporator Solids		
<32 Microns	12	1
32- 96 Microns	50	13
96-160 Microns	29	44
160-320 Microns	8	30
>320 Microns	1	13
Cyclone Solids		
<5 Microns	47	3
5-10 Microns	36	20
10-15 Microns	11	23
15-20 Microns	4	24
20-30 Microns	2	21
>30 Microns	1	9

From these distributions, it is apparent that most particles greater than about 35 microns were collected in the evaporator and particles smaller than 35 microns passed to the cyclone.

3. QUALITY OF THE PRODUCT ACID

The quality of the product acid determines its suitability for recycle to the digestion operation of the pigment process. The measures of product quality are (1) the cleanliness of the acid - that is, the degree of contamination by solids which have escaped collection by the cyclone, and (2) its sulfuric acid concentration calculated on a solids-free basis. The former is important because of the deleterious effects of small quantities of manganese, chromium and vanadium on pigment color. The latter is important so as to maintain a sulfuric acid balance in the pigment plant. Depending on the source of titanium, acid for digestion is generally required to contain 93-96% H_2SO_4 and is classified as Commercial Grade Acid. In the case of acid recovery, this concentration requirement can be met by blending a lower grade product acid with oleum. For example, in the case of The New Jersey Zinc Company plant at Gloucester City, New Jersey, a sulfuric acid balance within the pigment plant can be maintained if 86% H_2SO_4 acid (solids-free basis) is recovered and blended with 20% oleum.

The pilot plant operations showed that three variables directly controlled the final product acid strength: the sulfuric acid concentration of the feed to the evaporator, the number of condensation stages and the exit gas temperature from the last condensation stage.

The acid concentration of the feed is subject to control in the preconcentration step of the recovery process. Maximum targets of 30% H_2SO_4 and 35% H_2SO_4 were set for the ilmenite liquor and slag liquor, respectively as described in Section VI-1. These values corresponded to 35% H_2SO_4 and 44% H_2SO_4, respectively on a solids-free basis. The number and description of the condensation stages are described in Section IV-3.

The objective of the pilot plant operation was to achieve satisfactory sulfuric acid concentration in the product while operating within the constraint of a water balance. This was accomplished for a given condensation configuration by controlling the outlet temperature from the spray tower. In the adiabatic cooling of the acid-laden gases in the partial condenser, the ultimate source of coolant was the water used to cool the vapor stream in the spray tower. The dilute acid (10-25% H_2SO_4 depending on operating conditions) which condensed in the spray tower was injected into the partial condenser

which was the primary condensation stage. If the product acid concentration was too low, it indicated that too much coolant was being used (that is, the spray tower outlet temperature was too low) and a reduction in cooling water was in order.

The relationship between the three variables affecting product acid concentration is shown in Figure 11. No distinction is made between the spray evaporative cooling and the venturi contactor as a means of condensing the acid vapors. There was no evidence to indicate that for an equal number of stages one approach was better than the other.

The typical solids removal which was observed in the pilot plant was 90%. The remaining 10% of the solids which were originally present in the feed found their way to the product acid and gave it a milky-white appearance. A typical analysis of this acid (obtained from slag based end liquor) is given in Table 8.

Table 8. TYPICAL ANALYSIS OF PRODUCT ACID
(from slag based end liquor)

H_2SO_4 (as is)	80.8%
H_2SO_4 (solids free)	86.0
H_2O (total)	13.2
$FeSO_4$	0.8
$Fe_2(SO_4)_3$	1.8
$Al_2(SO_4)_3$	1.5
$TiOSO_4$	0.6
$MgSO_4$	1.2
$VOSO_4$	0.083
$Cr_2(SO_4)_3$	0.045
$MnSO_4$	0.027

Experimental digestions of titanium slag were made with typical product acid (79.3% H_2SO_4, 7.4% solids) which was upgraded with 20% oleum to 92.7% H_2SO_4 (95.8% H_2SO_4 on a solids-free basis). Attack acid of this strength is required in the pigment plant to initiate the digestion of the ore and to assure a high recovery of soluble titanium. The upgraded acid was suitable for digesting the titanium slag and the resultant digestion liquor was comparable in filtration rate and stability characteristics to liquor prepared with virgin acid. Titanium dioxide recovery levels were normal. Since it is difficult to make meaningful pigment from a laboratory digestion, no pigment was produced from the recycled acid.

The quantitative effect on pigment quality of recycling part of the solids with the recovered acid cannot be predicted accurately. The

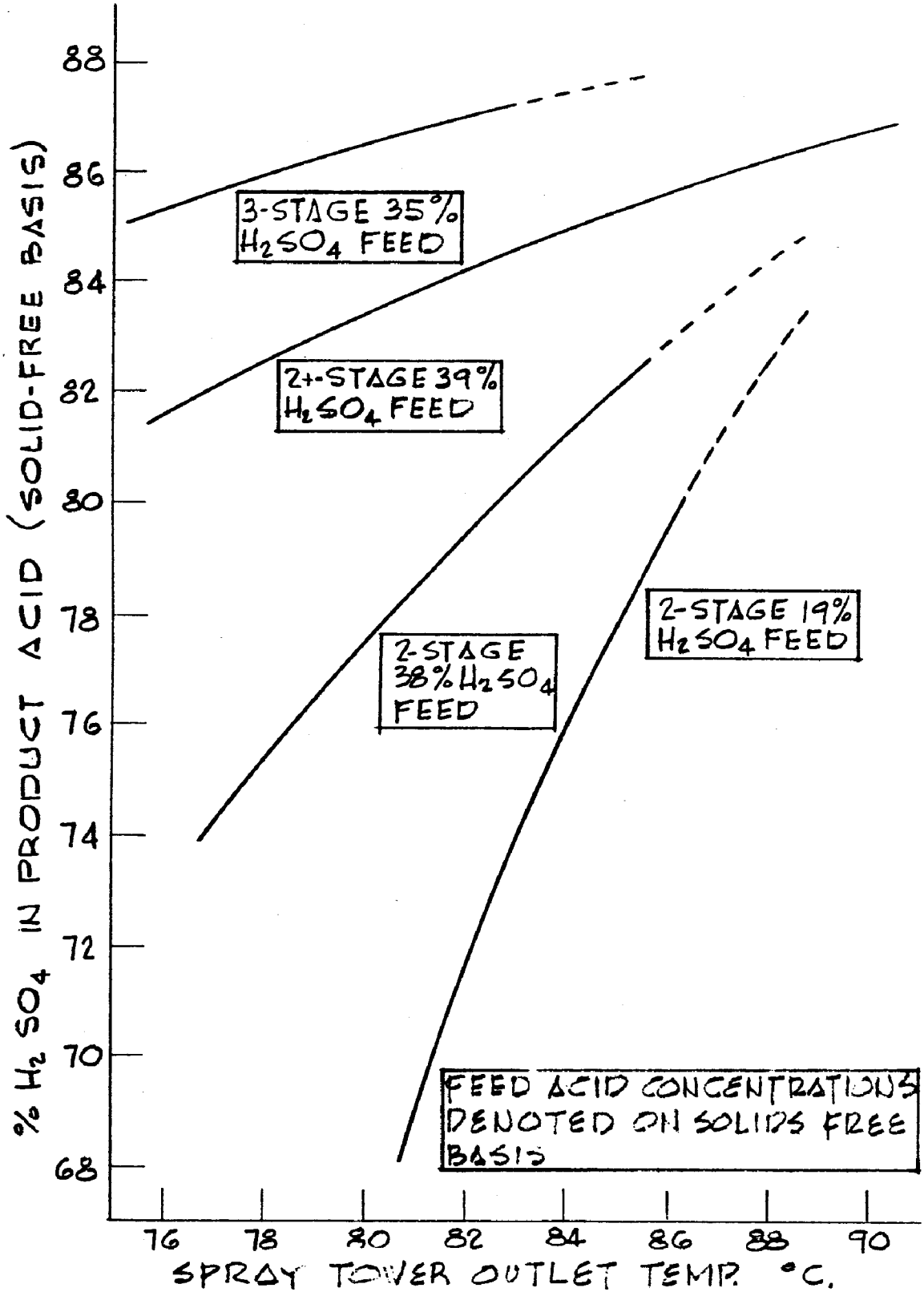

FIGURE 11. PRODUCT ACID CONCENTRATION AS A FUNCTION OF CONDENSATION STAGES AND OUTLET TEMPERATURE OF LAST STAGE

recycled solids will increase the amounts of chromium, vanadium and manganese in the hydrolysis liquor. Based on historical plant pigment evaluations, the net effect of recycling 10% of the solids is marginally tolerable. However, every effort should be made to reduce the solids loading in the acid vapor stream prior to the condensation stage.

4. ACID MIST ELIMINATION

In the initial stages of the pilot plant program, a Teflon mesh mist pad was used to reduce acid mist emissions. This pad was situated after the venturi scrubber and the gases which passed through the pad were saturated at a temperature of approximately 73°C. The acid mist loading in the effluent gases from the eliminator was 1660 mg/m^3 (dry) which corresponded to an elimination efficiency of 50%. By replacing the Teflon pad with a Brink mist eliminator, while at the same time maintaining the venturi scrubber, the mist loading was reduced to 645 mg/m^3. This latter figure corresponded to an elimination efficiency of 80%, but was still below the Brink design value of 99%. The discrepancy in the acid mist efficiency of the Brink unit was attributed to the presence of water mist due to the saturated gas stream entering the eliminator. The venturi was subsequently replaced by the spray tower to reduce water mist and thereby increase the efficiency of acid mist elimination. This change permitted independent control of the Brink inlet temperature and reduced the water mist problem by keeping the gas stream above the saturation temperature. The resultant mist loadings, which are summarized in Table 9, confirmed the need for this additional degree of freedom. Despite the fact that the mist loading to the eliminator was greater at 92°C than at 75°C (15,900 mg/m^3 versus 3,530 mg/m^3), the elimination efficiency approached the 99% design level at the higher temperature due to the virtual absence of water mist at that temperature.

Table 9. AVERAGE ACID MIST LOADINGS IN STACK GAS

Eliminator Inlet Temp. °C	Type of Eliminator	Stack Emissions Acid Mist, mg/m^3	Elimination Efficiency
73	Teflon Pad	1660	50
73	Brink	645	80
75	Brink	565	84
82	Brink	460	94
92	Brink	250	98

5. SCRUBBING FOR REMOVAL OF SULFUR DIOXIDE

The sulfur dioxide emissions as measured by use of hydrogen peroxide impingers averaged 555 ppm for preconcentrated slag acid and 865 ppm for preconcentrated ilmenite acid. In an attempt to reduce these SO_2 levels, the stack gases (averaging 710 actual m^3/hr.) were contacted with 2.27 m^3/hr. of a 5 wt. % slurry of lime across a pressure drop of 125 mm H_2O. The SO_2 levels were consequently reduced to 285 ppm for slag acid and 290 ppm for ilmenite acid. Scrubbing efficiency at higher pressure drops was not evaluated due to limitations on blower capacity. No fouling of the venturi surfaces was observed, but scrubbing tests were too short (generally about two hours) to draw conclusions in this regard.

6. MATERIAL BALANCE - RECOVERY AND LOSS OF SULFURIC ACID

The losses of sulfuric acid associated with the acid recovery fall into four categories:

Free acid occluded in the solids
Oxidation of ferrous iron
Formation of sulfur dioxide
Nonrecoverable acid mist

The magnitudes of these losses depend upon such operating variables as temperatures, acid feed composition, feed rate and conditions of feed atomization. In order to minimize the variations due to feed composition, it was necessary to normalize the composition when calculating losses. Slag based acid feed was normalized to a sulfuric acid-to-iron ratio of 12 and ilmenite based acid was normaled to a ratio of 7.5. Similarly, the ratio of total solids to iron was normalized to values of 7.1 and 4.3 for slag acid and ilmenite acid, respectively. With these adjustments, the average sulfuric acid losses (as percentages of the acid fed to the evaporator) are reported in Table 10.

Table 10. AVERAGE SULFURIC ACID LOSSES

	Slag Based Liquor		Ilmenite Based Liquor	
	Average	Range	Average	Range
% of Acid Lost As				
Free Acid in Solids	8.2	5.5-10.2	3.8	0.9- 8.9
Ferric Sulfate	4.6	4.0- 5.9	5.8	4.7- 6.9
Sulfur Dioxide	2.5	1.4- 4.2	4.2	1.2- 8.8
Acid Mist	0.5	0.1- 1.0	0.6	0.2- 0.8
Total	15.8	14.0-17.4	14.4	9.1-24.7
% Recoverable As Product Acid	84.2		85.6	

7. HEAT BALANCE

A. Burner and Spray Evaporator

Heat balances were made on the system to determine the amount of heat lost from the process equipment. These balances showed that 68,000 kcal/hr., or approximately one-third of the heat being supplied to the system, was lost to the surroundings by the burner and the evaporator. The bulk of this loss (52,000 kcal/hr.) was lost through the burner shell. In a commercial burner, where the combustion air is preheated by the burner shell and where the relative surface area of the shell is smaller, the burner loss would be a considerably smaller percentage of the total heat input.

In order to establish the thermal requirements for evaporating acid feed at various levels of concentration, the run data were correlated in the following manner:

a. Since the burner operated at more or less constant temperature throughout the campaign, a constant heat loss of 68,000 kcal/hr. was subtracted from the theoretical adiabatic heat input of the burner (based on natural gas consumption). This yielded the net heat available for evaporation of the acid feed.

b. The acid feed was calculated on a solids-free basis to factor out differences in the feed due to the presence of greater or lesser amounts of solids.

c. The net heat consumed per kilogram of 100% H_2SO_4 in the feed was plotted against acid feed concentration. This is shown in Figure 12 for an average evaporator outlet temperature of 350°C.

The curve in Figure 12 points out the advantages (in heat duty and evaporator size) in preconcentrating prior to spray evaporating. Since the data used in generating this relationship had heat losses factored out, a heat loss factor must be reintroduced for any commercial scale-up. For example, for slag based acid which has been preconcentrated to a level of 35% H_2SO_4, 21% solids, 44% water (44% H_2SO_4 on a solids-free basis) the evaporator heat load is 2000 kcal/kg H_2SO_4. If a 10% heat loss factor is used, the heat duty is increased to 2200 kcal/kg H_2SO_4. (This heat duty is only for the evaporator. The heat required to preconcentrate the waste acid to 35% H_2SO_4 must be included to obtain the overall thermal requirements. Based on calculations, preconcentration to this level would require an additional 2000 kcal/kg H_2SO_4.)

B. Acid Condensation Train

In the pilot plant, the partial condenser and separator were insulated to minimize heat loss. The purpose of this was to maintain as adiabatic a system as possible in order to fully evaluate condensation of acid by spray cooling. Under typical conditions the enthalpy entering the partial condenser was 265 kcal/kg of dry gas and the enthalpy of the gas stream entering the mist eliminator was 252 kcal/kg dry gas for a heat loss of approximately 5% through the vessel walls.

8. RECOVERY OF SULFURIC ACID FROM PICKLE LIQUOR

The use of waste acid from steel pickling operations as feed to the spray evaporator was evaluated apart from slag and ilmenite end liquors. A trailer load of typical waste acid was obtained from a Pennsylvania steel mill. The recovery of useful acid from this material was not encouraging due to the low sulfuric acid content and the high quantities of ferrous iron (2.1% H_2SO_4, 18.5% $FeSO_4$). Only 54% of the sulfuric acid was accounted for as low concentration product acid (11% H_2SO_4) and acid mist - almost all of it being as mist. The balance of the sulfuric acid (46%) was lost as ferric sulfate and sulfur dioxide. Significantly, no acid was lost as free acid in the solids. The dried solids had the following composition:

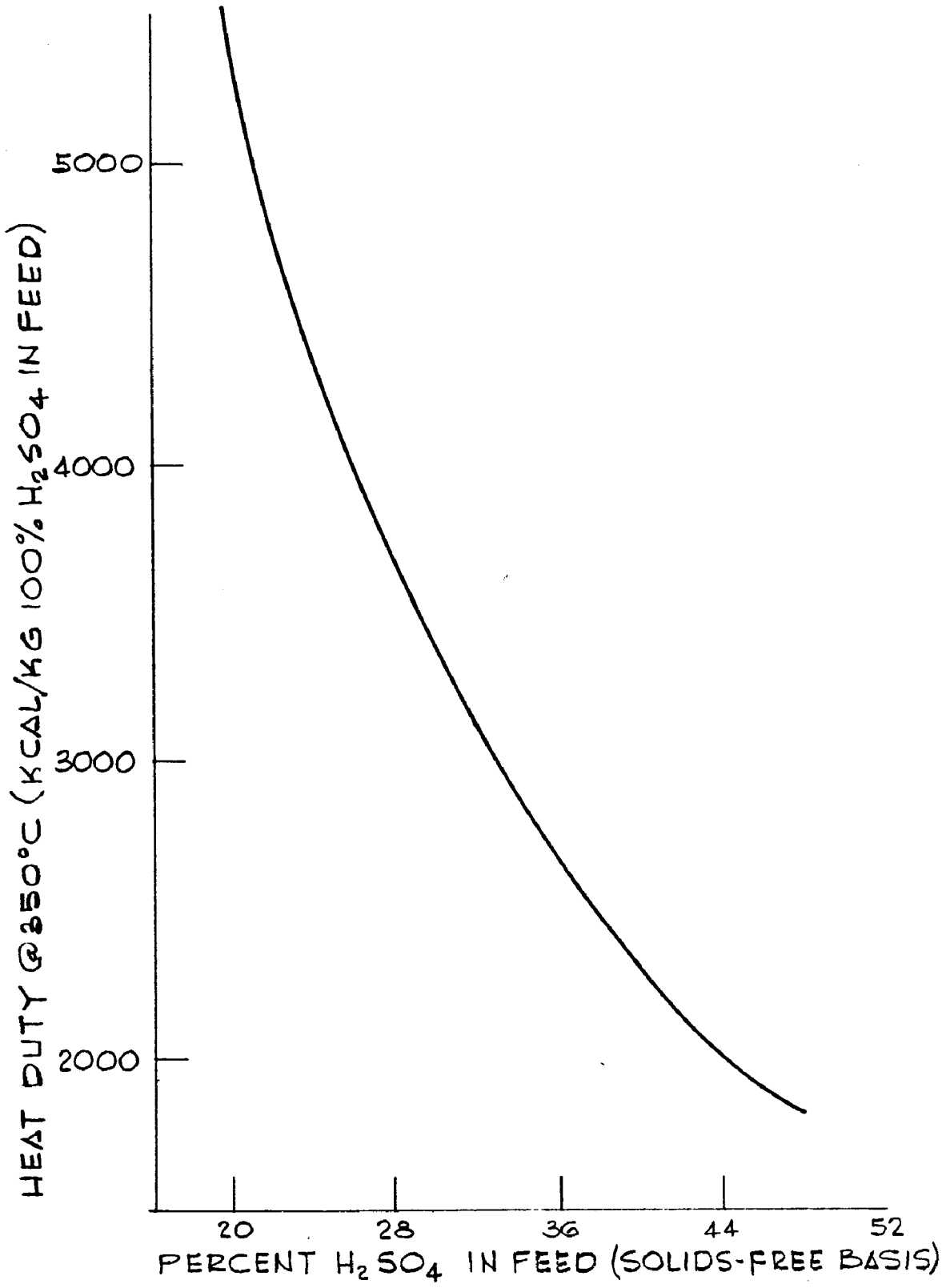

FIGURE 12. SPRAY EVAPORATOR HEAT LOAD VS. FEED ACID CONCENTRATION

Iron As	Evaporator Solids	Cyclone Solids
$FeSO_4$	62%	72%
$Fe_2(SO_4)_3$	35	26
Fe_2O_3	3	2

Raw pickle liquor does not lend itself favorably to acid recovery by spray evaporation. In addition to having a low ratio of acid to solids, the crystals of ferrous sulfate had an eroding effect on the nozzle. Blockages also occurred more frequently than with other feeds. Consideration was given to a process whereby the pickle liquor could be concentrated to 20% H_2SO_4 prior to evaporation. However, this approach would require cooling, crystallizing and concentrating the pickle liquor. Since the pilot plant was not equipped to make this separation, no attempt was made to implement this modified process.

9. PRECONCENTRATION OF WASTE ACID

From a standpoint of economics, spray evaporation of a waste acid which has been previously concentrated from nominally 20% H_2SO_4 to 30-40% H_2SO_4 is desirable. At the 35% H_2SO_4 level, for example, the preconcentration step removes more than 50% of the water without introducing any significant problems of iron oxidation (SO_2 formation) or acid mist. This results in a reduction in size of the spray evaporator and other process vessels.

The preconcentration of waste acid was not integrated into the recovery pilot plant at Palmerton since it was felt that sufficient technology existed elsewhere to accomplish this result(1). Among suitable methods for preconcentrating acid feed are:

a. Vacuum evaporation of acid feed which has been previously cooled to crystallize and separate salts. Montedison of Italy(6) currently use this technique to obtain an acid which contains 45% H_2SO_4 and 6% solids.

b. Submerged combustion. Included are processes developed or proposed by Chemical Construction Corporation(3), Selas Corporation(7) and Thermal Research Corporation(8).

In order to evaluate some of the parameters associated with preconcentration, a test program was run at the Selas Corporation pilot facilities in Dresher, Pennsylvania. In these tests, waste acid was

preconcentrated from 18% H_2SO_4 and 10% solids to 40% H_2SO_4 and 22% solids. The acid was single phase at the normal operating temperatures (110°C) and presented no difficulties in handling. The degree of iron oxidation in these tests was nil. Acid mist in the stack effluent ranged from 1240 mg/standard m^3 (dry) at 33% H_2SO_4 to 4940 mg/standard m^3 at 39% H_2SO_4 acid concentration. Tests indicated that 75% of the acid mist was smaller than three microns in diameter.

It was concluded from the tests at Selas that no unusual problems would be encountered in preconcentrating the waste acid stream prior to introduction to the spray evaporator. However, some solids blockage did occur periodically in the concentrator throat and this would have to be resolved before commercial implementation.

10. MATERIALS OF CONSTRUCTION

The process to recover sulfuric acid by evaporation and subsequent condensation encounters a wide range of acid strengths and temperatures. In order to cope with the corrosion associated with these conditions, a number of materials were evaluated and their suitability is discussed below.

A. Cor-Ten Steel

The spray evaporator was constructed of Cor-Ten steel lined with acid-resistant refractory, with the exception of the outlet gas duct which was unprotected by refractory. The evaluation of this outlet duct at the end of the 1972 campaign showed little evidence of corrosion despite the fact that it was situated directly beneath the atomizing nozzle and was subjected to a number of upsets. In order to confirm this performance, four Cor-Ten test panels of approximately 0.5 m^2 each were placed in the evaporator for the 1973 campaign. When these panels were removed, they showed an average corrosion rate of only 0.38 millimeter per year. The conditions of operation in the pilot plant were almost certainly more severe than would be encountered in a commercial plant where start-up and shutdowns are not nearly so frequent as in a pilot operation.

Cor-Ten steel was also used for the cyclone to collect solids from the gas stream. No evidence of corrosion was apparent after either of the two campaigns.

B. Lead

Lead was used as a lining in the spray tower and as a membrane beneath the acid-resistant refractory of the primary condenser and

separator. With the exception of some minor acid leaks which developed in the duct work leading to spray tower (attributed to improper installation) the lead functioned very well.

C. Acid-Resistant Refractory

Castable, acid-resistant refractory installed directly over Cor-Ten steel was initially used in the primary condenser and separator. Substantial downtime was experienced due to acid corrosion of the shell in the areas where the refractory cracks developed. The decision was made to replace the castable refractory in the primary condenser with acid brick over a lead membrane, and no corrosion problems were subsequently encountered. Similarly, the separator was also provided with a lead membrane beneath its acid-resistant refractory and no further corrosion was observed. An examination of the acid-resistant refractories showed no apparent attack by the 85% H_2SO_4 acid which was present at temperatures of up to 200°C. The lead membrane is highly desirable insurance against improper refractory installation and the vagaries associated with handling sulfuric acid at elevated temperatures.

D. Plastics and Fiber-Reinforced Polyester

Kynar and FRP were used satisfactorily in applications up to 50% H_2SO_4 and 100°C for lined pipes, pump housing, impellers, valves and process vessels. Teflon-lined pipe was used satisfactorily on all lines which carried concentrated acid (85% H_2SO_4) at elevated temperatures (up to 200°C).

E. High Silicon Iron

A high silicon iron pump was used to recycle hot (up to 200°C), concentrated (85% H_2SO_4) acid to the primary condenser and separator. This pump exhibited superior performance during the project, and an examination of the housing and impeller at the end of the campaign (400-500 operating hours) showed no apparent wear.

F. Special Alloys

Nickel and steel alloys were used in limited applications for atomizing nozzles and lances, gas and liquid distributors, thermowells, and flowrators. These alloys, which included SS 316, Alloy 20, Hastelloys B and C, and Inconel 625, performed predictably in the several environments in which they were tested. In particular, Alloy 20 gave excellent performances in dilute acid applications (20% H_2SO_4) at temperatures up to 80°C, but was found to be unsuitable at high concentrations (80% H_2SO_4) and temperatures above 180°C.

VII. DESIGN OF COMMERCIAL PLANT

As a result of the pilot plant performance, a preliminary engineering design of a waste acid recovery plant using the evaporative technology was made. The design specifications were for 15% excess capacity beyond a base equivalent to 38,100 metric tons per year of titanium dioxide pigment and 67,200 metric tons of waste sulfuric acid (100% H_2SO_4).

The capital cost of this recovery plant (as of January 1, 1975) is estimated to be $7,800,000. This figure includes salts neutralization and all normal site preparation, but does not include the cost of land. Operating consumptions are summarized in Table 11.

Table 11. BASIS FOR DETERMINING OPERATING COST

Production	
Titanium Dioxide	109 Metric Tons/Day
H_2SO_4 (100%) as Waste Acid	192 Metric Tons/Day
H_2SO_4 (100%) Recovered Product	165 Metric Tons/Day
350 Operating Days Per Year	
Utilities*	
Fuel (No. 6, 2% Sulfur)	3,090 Liters/Hour
Steam	757 kg/Hour
Process Water	13,323 Liters/Hour
Cooling Water	47,994 Liters/Hour
Electrical Power	1,350 KVA
Lime (as CaO)	512 kg/Hour
Labor (Estimated)	
Operating	7 Man-Days/Day
Foreman	1.5 Man-Days/Day
Analytical	0.5 Man-Days/Day
Maintenance	10% of Invested Capital
Taxes, Insurance	2% of Invested Capital

*Based on preconcentration to 40% H_2SO_4 prior to spray evaporation.

At current values for fuel oil ($7.95/MM kcal or $2.00/MM Btu) and assuming depreciation at 10% per year, the total operating cost of such a plant is estimated at approximately $77 per metric ton of 100% H_2SO_4 recovered. This cost includes hauling and disposal of the neutralized evaporator solids at an estimated cost of $3.00/MT of solids which is equivalent to $4.80/MT of recovered acid.

Before such a commercial plant is constructed, an in-depth environmental study of its potential effects should be made. A significant amount of energy and material will be consumed in the recovery of acid. This is summarized in Table 12.

Table 12. ENERGY AND MATERIALS IMPACT OF COMMERCIAL PLANT

	Annually	Per Metric Ton of Recovered H_2SO_4
Fuel Oil*	23,400 MT	0.40 MT
Electricity	11,350,000 Kwh	196 Kwh
Lime (as CaO)	4,300 MT	0.07 MT
Disposal of Neutralized, Wet Solids (@ 50% H_2O)	92,400 MT	1.6 MT

*Does not include fuel for lime slaking or hauling of solids to a disposal site.

The disposal of solids is of particular significance if the plant is in an urban area. Approximately 30,000 m^3 of wet sludge will have to be disposed of annually, and this may require hauling over great distances if landfill areas are not readily available.

REFERENCES

1. Duecker, W. W., and J. R. West. The Manufacture of Sulfuric Acid. American Chemical Society Monograph Series; New York, Reinhold Publishing Corporation, 1959. pp. 297-345.

2. Umstead, C. H. Evaporative Sulfuric Acid Recovery from Sulfuric Acids Containing Sulfates. U.S. Patent 3,713,786, January 30, 1973.

3. Shah, I. S., and J. B. Rinckhoff. Method for Concentrating Dilute Acidic Solutions. U.S. Patent 3,789,902. February 5, 1974.

4. Experimental work. Research Department, The New Jersey Zinc Company.

5. Latimer, W. M. The Oxidation States of the Elements and Their Potentials in Aqueous Solutions. Englewood Cliffs, N.J., Prentice-Hall, Inc., 1961. pp. 70-81.

6. Private communication from Montedison S.p.A. of Italy to The New Jersey Zinc Company.

7. Selas Corporation of America, Dresher, Pa. 19025.

8. Thermal Research and Engineering Corporation, Conshohocken, Pa. 19428.

ACKNOWLEDGMENTS

The authors wish to acknowledge with sincere thanks the support granted this project by the U.S. Environmental Protection Agency and the help provided by Dr. Herbert S. Skovronek, the USEPA Project Officer.

TECHNICAL REPORT DATA
(Please read Instructions on the reverse before completing)

1. REPORT NO. EPA-670/2-75-016	2.	3. RECIPIENT'S ACCESSION NO.
4. TITLE AND SUBTITLE THE RECLAMATION OF SULFURIC ACID FROM WASTE STREAMS		5. REPORT DATE April 1975; Issuing Date
		6. PERFORMING ORGANIZATION CODE
7. AUTHOR(S) Howard C. Peterson and Peter L. Kern		8. PERFORMING ORGANIZATION REPORT NO.
9. PERFORMING ORGANIZATION NAME AND ADDRESS Research Department, The New Jersey Zinc Company, Palmerton, Pennsylvania 18071		10. PROGRAM ELEMENT NO. 1BB036; ROAP 21AZQ; Task 07/08
		11. CONTRACT/GRANT NO. S-801349
12. SPONSORING AGENCY NAME AND ADDRESS National Environmental Research Center, Office of Research and Development, U.S. Environmental Protection Agency, Cincinnati, Ohio 45268		13. TYPE OF REPORT AND PERIOD COVERED Final
		14. SPONSORING AGENCY CODE
15. SUPPLEMENTARY NOTES		

16. ABSTRACT

The New Jersey Zinc Company process for acid recovery employs spray evaporation to separate sulfuric acid from metallic sulfates. The salts are removed as dry, free-flowing solids and the acid-laden off-gas is directly cooled to partially condense product acid having a concentration in excess of 85% H_2SO_4. The process was piloted at Palmerton, Pennsylvania, at a rate of two tons per day of sulfuric aicd (100% basis) using as feed the waste stream of a titanium dioxide pigment plant. On the basis of the pilot work, a commercial plant was designed to process 345,000 metric tons annually of 19.5% H_2SO_4 waste end liquor from a 38,100-metric-ton-per-year pigment plant. The estimated investment (as of January 1, 1975) is $7,800,000. Operating costs (including depreciation at 10%) would be approximately $77 per metric ton of 100% H_2SO_4 recovered. This cost includes neutralization of the dried solids and disposal in a landfill site.

17. KEY WORDS AND DOCUMENT ANALYSIS

a. DESCRIPTORS	b. IDENTIFIERS/OPEN ENDED TERMS	c. COSATI Field/Group
*Sulfuric acid Reclamation Waste treatment Operating costs *Evaporation *Titanium dioxide	*Sulfuric acid reclamation *Titanium dioxide manufacture Titanium dioxide byproducts	13B

18. DISTRIBUTION STATEMENT RELEASE TO PUBLIC	19. SECURITY CLASS (This Report) UNCLASSIFIED	21. NO. OF PAGES 53
	20. SECURITY CLASS (This page) UNCLASSIFIED	22. PRICE

EPA Form 2220-1 (9-73)

☆ U. S. GOVERNMENT PRINTING OFFICE: 1975-657-592/5355 Region No. 5-11