CLEAN WATER

WATER POLLUTION CONTROL RESEARCH SERIES ● 11024FKJ 10/70

In-Sewer Fixed Screening of Combined Sewer Overflows

ENVIRONMENTAL PROTECTION AGENCY • WATER QUALITY OFFICE

WATER POLLUTION CONTROL RESEARCH SERIES

The Water Pollution Control Research Reports describe the results and progress in the control and abatement of pollution of our Nation's waters. They provide a central source of information on the research, development and demonstration activities of the Water Quality Office of the Environmental Protection Agency, through in-house research and grants and contracts with the Federal, State, and local agencies, research institutions, and industrial organizations.

Triplicate tear-out abstract cards are placed inside the back cover to facilitate information retrieval. Space is provided on the card for the user's accession number and for additional key words. The abstracts utilize the WRSIC system.

Inquiries pertaining to Water Pollution Control Research Reports should be directed to the Head, Project Reports System, Planning and Resources Office, Research and Development, Water Quality Office, Environmental Protection Agency, Washington, D.C. 20242.

Previously issued reports on the Storm and Combined Sewer Pollution Control Program:

11034 FKL 07/70	Storm Water Pollution from Urban Land Activity
11022 DMU 07/70	Combined Sewer Regulator Overflow Facilities
11020 --- 08/70	Combined Sewer Overflow Seminar Papers
11022 DMU 08/70	Combined Sewer Regulation and Management - A Manual of Practice
11023 FDB 09/70	Chemical Treatment of Combined Sewer Overflows

Continued on inside back cover....

IN-SEWER FIXED SCREENING OF COMBINED SEWER OVERFLOWS

by

Envirogenics Company
A Division of
Aerojet-General Corporation
El Monte, California

for the

ENVIRONMENTAL PROTECTION AGENCY
WATER QUALITY OFFICE

Program No. 11024 FKJ
Contract No. 14-12-180
October 1970

For sale by the Superintendent of Documents, U.S. Government Printing Office
Washington, D.C., 20402 - Price $1.25

EPA/WQO Review Notice

This report has been reviewed by the Water Quality Office and approved for publication. Approval does not signify that the contents necessarily reflect the views and policies of the Water Quality Office, nor does mention of trade names or commercial products constitute endorsement or recommendation for use.

ABSTRACT

A field sampling and analysis program, supplemented with laboratory studies, was conducted to characterize combined sewage contributary to combined sewer overflows, to ascertain the removal of floatables and solid materials that could be effected by the placement of screening devices in combined sewer systems, and to assess the effect of solids removal on chlorination requirements and bacterial concentrations.

Statistics are presented on combined sewage bulk and screenings collected with 0.125-, 0.25-, 0.5-, and 1.0-in. aperture screens for the following constituents (where meaningful): total solids, total volatile solids, total suspended solids, total volatile suspended solids, settleable solids, floatable solids, particle size distribution, biochemical oxygen demand, chemical oxygen demand, hexane extractable material, total coliforms, fecal coliforms, and fecal streptococci.

Regression analyses were performed between all observed combined sewage bulk and screenings constituent pairs. Statistically significant correlations at the 95-% confidence level were obtained for the combined sewage bulk only between total solids and total volatile solids, between total volatile solids and total volatile suspended solids, and between total suspended solids and total volatile suspended solids. For combined sewage screenings, statistically significant correlations at the 95-% confidence level were found between total solids and total volatile solids, between BOD and COD, between BOD and hexane extractable material, and between COD and hexane extractable material.

Removals of total solids, total volatile solids, biochemical oxygen demand, chemical oxygen demand, hexane extractable material, total coliforms, fecal coliforms, and fecal streptococci resulting from placement of the screening devices into the combined sewer were calculated and were marginal.

Fixed screening of combined sewage with aperture sizes ranging from 0.0164 to 1.0 in. appear to have little, if any, effect on total coliform and fecal coliform densities or bacterial kills by chlorination. Chlorination requirements for combined sewage subjected to fixed screening at different practical aperture sizes were reduced only slightly.

This report was submitted in fulfillment of Contract No. 14-12-180 and Program No. 11024 FKJ between the Federal Water Quality Administration and the Aerojet-General Corporation.

Key Words: Combined sewage, combined sewer overflows, combined sewage treatment, combined sewage characteristics, fixed screens, solids removal.

CONTENTS

Section		Page
	ABSTRACT	iii
	FIGURES	vi
	TABLES	viii
I.	CONCLUSIONS	1
II.	INTRODUCTION	5
	Objectives	5
	Scope	5
III.	STUDY AREA	7
IV.	METHODOLOGY	13
	Sampling Devices	13
	Bulk Sampler	13
	Screenings Sampler	17
	Sampling and Flow Measurements	17
	Analyses	19
	Chlorination Studies	19
V.	SEWAGE CHARACTERIZATION	23
	Sewage Flows	23
	Sewage Quality	31
	Sewage Constituent Correlations	31
	Combined Sewage Bulk	34
	Combined Sewage Screenings	34
VI.	EFFECTS OF SCREENING DEVICES	45
	Constituent Removals	45
	Chlorination Practices	52
VII.	APPLICATION OF SCREENING DEVICES	61
VIII.	ACKNOWLEDGMENTS	65
IX.	REFERENCES	67
X.	APPENDICES	69

FIGURES

Figure		Page
1.	Study Area Location	8
2.	Sampling Site and Tributary Area	9
3.	Typical Catch Basin with Curb Inlet	12
4.	Sampler Supporting Structure and Manhole Modifications	14
5.	Installation of Sheet Metal Channel and Guides for Sampling Equipment	15
6.	Combined Sewage Bulk Sampler	16
7.	Combined Sewage Screenings Sampler	18
8.	Precipitation at San Francisco Federal Office Building and Combined Sewage Flow at Jackson Street Sampling Site	25
9.	Diurnal Distribution of Dry-weather Sewage Flow at Jackson Street Sampling Site	29
10.	Relationship between Total Solids and Total Volatile Solids of Combined Sewage Bulk	36
11.	Relationship between Total Volatile Solids and Total Volatile Suspended Solids of Combined Sewage Bulk	37
12.	Relationship between Total Suspended Solids and Total Volatile Suspended Solids of Combined Sewage Bulk	37
13.	Relationship between Total Solids and Total Volatile Solids of Combined Sewage Screenings	40
14.	Relationship between Biochemical Oxygen Demand and Chemical Oxygen Demand of Combined Sewage Screenings	41

FIGURES (Continued)

Figure		Page
15.	Relationship between Biochemical Oxygen Demand and Hexane Extractable Material of Combined Sewage Screenings	42
16.	Relationship between Chemical Oxygen Demand and Hexane Extractable Material of Combined Sewage Screenings	43
17.	Effect of Screen Aperture Size on Combined Sewage Constituent Average Removals	53
18.	Chlorine Demand of Screened and Unscreened Combined Sewage Samples	54
19.	Effect of Screen Aperture Size on Chlorine Dosage of Combined Sewage	56
20.	Solids Content of Screened Combined Sewage Samples	57
21.	Bacterial Densities of Screened Combined Sewage Samples before and after Chlorination	58

TABLES

Table		Page
1.	Surface Character of Study Area	7
2.	Tributary Areas of Catch Basins	11
3.	Combined Sewage Analysis Schedule	20
4.	Summary of Precipitation at Federal Office Building Associated with Wet-weather Measurement	24
5.	Correlations between Precipitation at Federal Office Building and Calculated Storm Run-off Flow at Sewage Sampling Location	30
6.	Combined Sewage Bulk Quality Characteristics	32
7.	Combined Sewage Screenings Quality Characteristics	33
8.	Statistically Significant Correlations between Combined Sewage Bulk Constituents at the 95-% Confidence Level	35
9.	Statistically Significant Correlations between Combined Sewage Screenings Constituents at the 95-% Confidence Level	39
10.	Qualitative Description of Combined Sewage Screenings	46
11.	Combined Sewage Constituent Removal Efficiencies by Fixed Screens	49

Section I

CONCLUSIONS

On the basis of a field sampling and measurement program on the characterization of combined sewage from a high-density residential neighborhood in San Francisco, California, and a laboratory investigation on the effects of solids removal on chlorination practices, a number of conclusions are presented. The findings represent the analysis and evaluation of 60 combined sewage bulk samples and 60 combined sewage screenings samples retained on screens of 0.125-, 0.25-, 0.5-, and 1.0-in. aperture inserted into a sewer to intercept the total flow. Both types of samples were taken with specially designed and manufactured equipment to assure the collection of representative samples.

1. Removals of deoxygenating materials (chemical oxygen demand and biochemical oxygen demand), oils and greases (hexane extractable materials), and bacteria by fixed screens placed in combined sewers were marginal.

2. Average percentage removals of screenable constituents as a function of screen aperture size were as follows:

	Screen Size, in.			
Constituent	1/8	1/4	1/2	1
Total solids	2.3	1.0	1.1	1.1
Total volatile solids	3.8	2.0	2.9	1.9
Biochemical oxygen demand	5.4	4.9	2.0	3.1
Chemical oxygen demand	5.0	5.4	1.6	2.7
Hexane extractable material	3.0	4.8	1.0	1.8
Total coliforms	4.3	9.8	4.2	23.1
Fecal coliforms	0.6	9.4	3.1	13.0
Fecal streptococci	2.6	26.4	2.6	35.0

3. Reductions in chlorine requirements to provide a chlorine residual of 1.0 mg/l after 15 minutes as a result of prior solids removal by fixed screening with what are believed to be practical apertures of 0.125 in. or greater appear small.

4. Screens with aperture sizes ranging from 0.0164 to 1.0 in. appear to have little, if any, effect on bacterial concentrations or bacterial kills by chlorination.

5. The nature of the collected visible screenings, consisting for the most part of fecal material, paper, leaves, and cigarettes, appears to be independent of screen aperture size, over a range from 0.125 to 1.0 in.

6. Observed qualities of the combined sewage bulk were highly variable, and had the following overall mean characteristics:

Total solids	209 mg/l
Total volatile solid	105 mg/l
Total suspended solids	67.6 mg/l
Total volatile suspended solids	52.2 mg/l
Settleable solids	2.58 ml/l
Floatable solids	3.89 mg/l
Biochemical oxygen demand	49 mg/l
Chemical oxygen demand	155 mg/l
Hexane extractable material	12.3 mg/l
Total coliforms	8.32×10^5 log MPN/100 ml
Fecal coliforms	1.55×10^5 log MPN/100 ml
Fecal streptococci	2.09×10^4 log MPN/100 ml

7. Overall average qualities of the combined sewage screenings were only slightly less variable than the bulk characteristics, and were as follows:

Total solids	21.3 g
Total volatile solid	18.8 g
Biochemical oxygen demand	484 mg/g
Chemical oxygen demand	1940 mg/g
Hexane extractable material	90.5 mg/g
Total coliforms	3.55×10^8 log MPN/g
Fecal coliforms	4.67×10^7 log MPN/g
Fecal streptococci	9.55×10^6 log MPN/g

8. For combined sewage bulk, statistically significant correlations at the 95-% confidence level were observed between total solids and total volatile solids, between total volatile solids and total volatile

suspended solids, and between total suspended solids and total volatile suspended solids. (Relations are given in Table 8, page 35.)

9. For combined sewage screenings, statistically significant correlations at the 95-% confidence level were found between total solids and total volatile solids, between biochemical oxygen demand and chemical oxygen demand, between biochemical oxygen demand and hexane extractable material, and between chemical oxygen demand and hexane extractable material. (Relations are given in Table 9, page 39.)

10. No statistically significant correlation at the 95-% confidence level was found between the storm flow at the sampling site and the precipitation recorded at an official weather station two miles distant.

Section II

INTRODUCTION

A major threat to the maintenance of a clean and enjoyable environment in many parts of the United States is the overflow from combined sewer systems to receiving waters during periods of moderate and heavy rainfall. In most instances much of the sanitary sewage contained in these sewers is discharged without treatment to natural water courses, resulting in unacceptably high pollutant loadings of floatable and settleable materials, oxygen-consuming substances, and pathogens.

Many methods of alleviating this pollution have been proposed, including total containment of combined sewer flows for later processing at sewage treatment facilities during low-flow periods, partial and complete treatment of combined sewer overflows at the bypass outfall, and complete separation of storm runoff and municipal sewage by reconstruction.

Because of the diluted state of the pollutants in the combined sewage and the highly intermittent nature of the flows, conventional treatment by sedimentation and biological degradation is extremely difficult to effect. Processes that would appear applicable to the severe operating conditions imposed by combined sewer flows are solids separation and disinfection. To provide a preliminary assessment of the possible effectiveness and benefits of solids separation methods, the character and quantity of solids contained in combined sewage, the pollutional aspects associated with the solids as a function of particle size, and the effect of these solids on disinfection practices must be established.

OBJECTIVES

The primary purpose of this program was the conduct of a sampling and analysis program to characterize combined sewage contributary to combined sewer overflows, to ascertain the removal of floatables and solid materials that could be effected by the placement of screening devices in combined sewer systems, and to assess the effect of solids removal on chlorination requirements and bacterial densities.

SCOPE

To provide an assessment of the effectiveness and benefits of solids separation methods, the character and quantity of solids contained in combined sewage and the pollution aspects associated with the solids as a function of particle size was established. A program was initiated to ascertain the characteristics of combined sewage that would be of significance with respect to solids separation. The sampling methods

provided for the determination of gross particle size distribution by screens in situ; thus the actual effects of screening on particle coalescence and disintegration, solids separation and retention, and flow disturbance were integrated into the results. Special sampling equipment was designed, constructed, and installed in the sampling manhole to meet these objectives.

A study site was selected in the City and County of San Francisco that was typical for both sanitary flow and storm runoff for a high-density residential urban neighborhood. The selected tributary runoff area was characterized as to type, size of drainage area tributary to the sampling manhole, number of domestic sewer connections, land use, topography, and number of street inlets or catch basins. Precipitation data for the area were collated for the period encompassing the sampling period and the preceding three months.

The sampling was conducted to permit the establishment of the concentrations of constituents in each fraction of combined sewage as a function of time and flow condition in the sewer and other factors such as intensity and duration of contributary rainfall. Two sample fractions, screenings and bulk liquid, were collected hourly for five consecutive hours during each separate rainfall event commencing near the start of the first significant rainfall. One size only of four screen sizes, 0.125-, 0.25-, 0.5-, and 1-in. aperture, was employed during each rainfall event. At the conclusion of each rainfall event five samples each of screenings and bulk liquid were collected for laboratory analysis. The foregoing sampling sequence was conducted on twelve separate occasions using each of the four screen sizes during three rainfall events.

Dry-weather flow was measured at the selected manhole for a period of 24 hours on a 2-hour interval basis.

Investigations were conducted on the effect of solids removal on chlorination requirements and bacteria reductions resulting from chlorination.

Section III

STUDY AREA

The study area is located in the northwest portion of the City and County of San Francisco, and is shown in Figure 1. It is exclusively residential consisting of predominantly two- and three-story structures which occupy the major portion of each lot. There is, however, a moderate degree of unoccupied area which has been landscaped with trees, shrubs, and lawns. The characteristics of surface runoff from this area are believed fairly typical of high-density, high-income residential neighborhoods.

The study area extends easterly along Jackson Street at a block or less width from Cherry Street to a point approximately 300 feet east of Spruce Street. A detailed map of the study area is presented in Figure 2. The total gross area tributary to the sampling and measuring station is 7.65 acres.

Topography of this section of San Francisco can be classified as rolling. The study area is located on the side of a hill with slopes ranging from gentle to moderately steep. Surface elevations based on San Francisco datum vary from a low of 209 feet at the sampling point to a maximum of 282 feet at the intersection of Washington Street and Maple Street.

The street and sidewalk areas tributary to the system are easily defined by the topography, as are the catch basin locations at the various intersections. Determination of the off-street areas contributing runoff was somewhat more difficult because detailed topographic surveys are not available; however, all roof drains are connected to the sewer system as required by City ordinance and the remaining off-street areas are relatively small. The nature and extent of surface types within the drainage area are shown in Table 1.

Table 1

SURFACE CHARACTER OF STUDY AREA

Surface Type	Area, acres	Portion, %
Roof	2.52	33
Street	1.60	21
Sidewalk	1.24	16
Yards & landscaping	2.29	30
Total	7.65	100

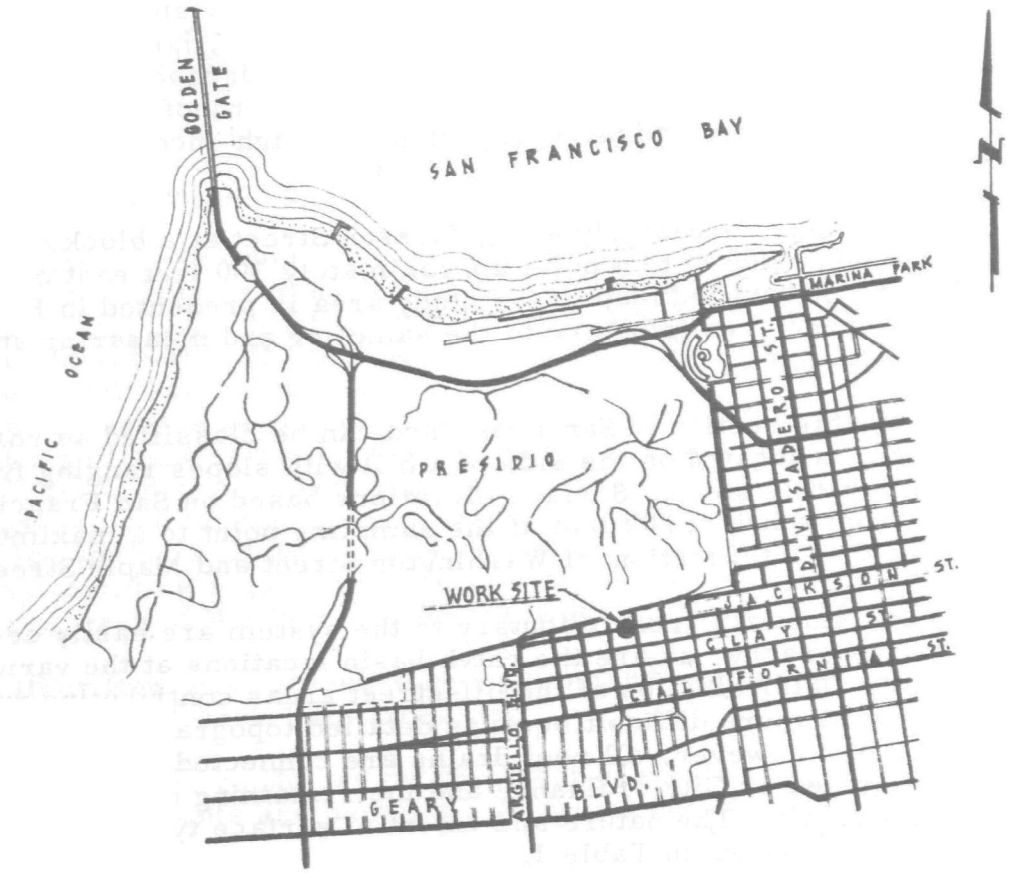

Figure 1. STUDY AREA LOCATION

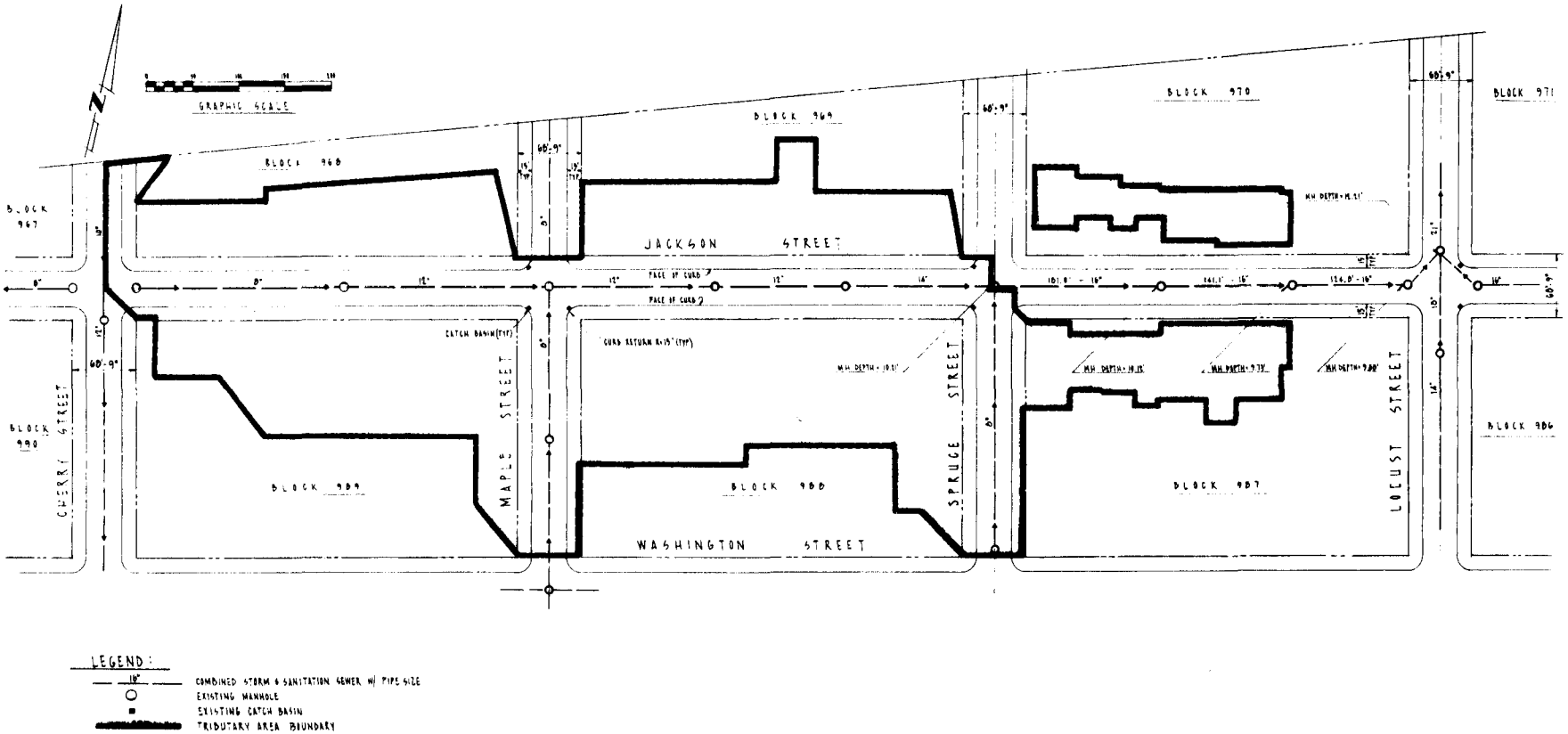

Figure 2. SAMPLING SITE AND TRIBUTARY AREA

San Francisco is situated in the Coast Range of mountains, which has an extreme influence on the climatic conditions of the City. The average annual rainfall for the area is 20.78 inches. Average monthly extremes range from approximately four inches occurring in December and January to one-hundreth of an inch in July.

The structures in the study area consist of 47 single-family residences; two apartment buildings containing a total of 16 living units, and one foreign embassy.

In estimating the population of the area, it was assumed that there are five persons per single-family residence, three persons per apartment unit, and that the embassy staff consists of five persons. On this basis, the total estimated population would be 288 persons in the tributary area distributed as follows: single family residence, 235; apartment unit, 48; and embassy, 5.

The 1960 census gave a population density of 60 persons per net acre and 41 persons per gross acre for the census tract in which the study area is located. Based on these densities, the population in the study area would be 314 on a gross acreage basis and 287 on a net acreage basis.

The contributary population is therefore estimated to be 300 persons.

Sewer grades follow the surface topography and vary from a minimum slope of 1.21% in Jackson Street upstream of the sampling station to a maximum of 21.54% in Spruce Street between Washington and Jackson Streets. The size, location, and slopes of the various collector sewers are shown in Figure 2.

The number of house connections to the tributary area is placed at fifty.

During periods of rainfall, surface runoff from streets, sidewalks, and landscaped areas are intercepted by the street gutters and conveyed to catch basins located at each intersection. Within the study area there are a total of six catch basins which drain on the average about three-quarters of an acre. Individual areas are presented in Table 2.

Detail of a typical catch basin with curb inlet is shown in Figure 3.

Of the total area approximately 59% is drained by catch basins and 41% by various house connections including roof drainage. On a flow basis, assuming 10-% runoff for landscaped areas and 100% for all other surfaces, the contribution of runoff waters would be approximately 54% for catch basins and 46% for house connections.

Table 2

TRIBUTARY AREAS OF CATCH BASINS

Location	Approximate Tributary Area, acres
NW Corner of Jackson & Maple	0.69
SW Corner of Jackson & Maple	1.36
SE Corner of Jackson & Maple	0.23
NW Corner of Jackson & Spruce	0.66
SW Corner of Jackson & Spruce	1.29
SE Corner of Jackson & Spruce	0.23

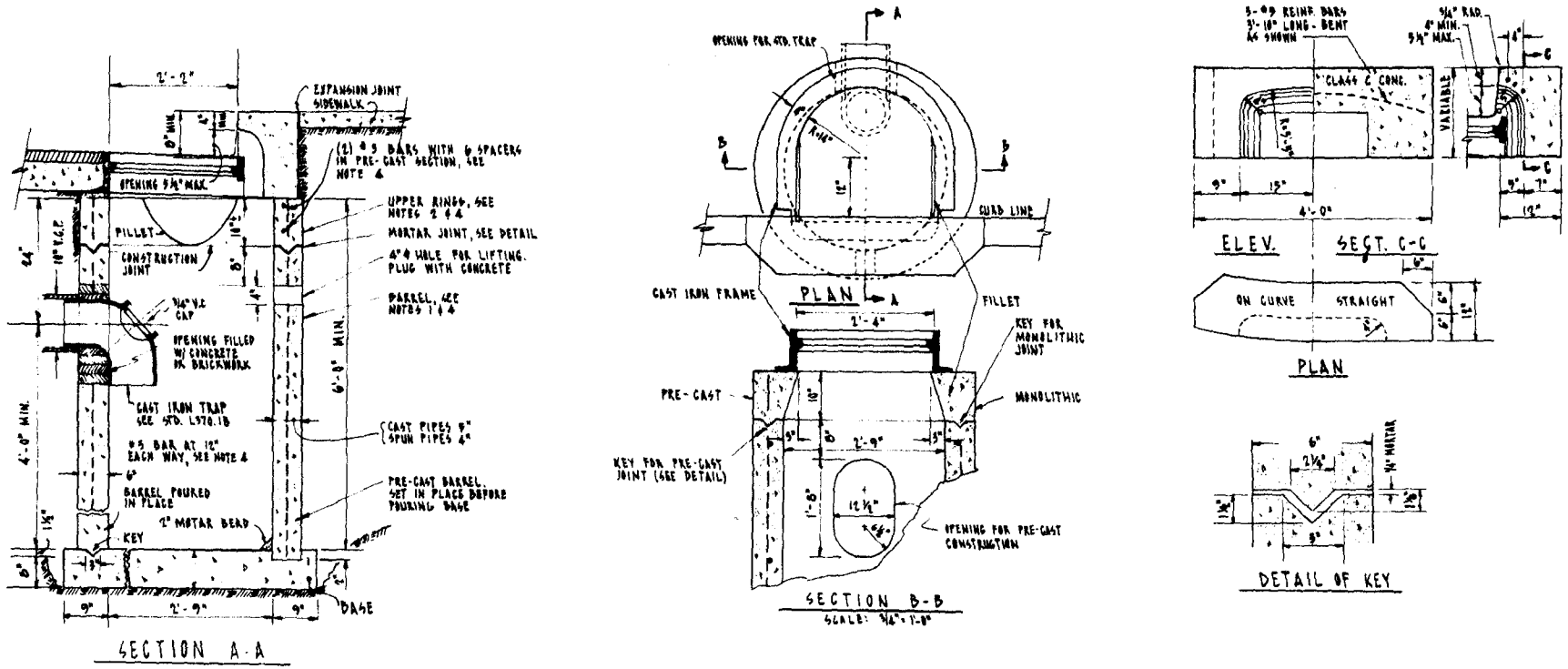

Figure 3. TYPICAL CATCH BASIN WITH CURB INLET

Section IV

METHODOLOGY

A sampling and analysis program was prepared that provided a characterization of combined sewage contributary to combined sewer overflows and the effect that solids removal by the placement of screening devices in combined sewer systems would have on the abatement of receiving water pollution and on chlorination practices.

SAMPLING DEVICES

Special sampling equipment and supporting structure were designed and manufactured by the Envirogenics Company, a Division of Aerojet-General Corporation, to assure representative collection of combined sewage samples. The equipment consisted of two types of samplers--a bulk liquid sampler and a screenings sampler. Both employed the same support structure and the same sampling station manhole. The supporting structure was installed and maintained in the manhole throughout the duration of the sampling program, and consisted of two vertical guide channels situated near the center of the manhole on the shelf edges and secured by braces to the manhole wall. Each sampler was placed by hand and removed by winch.

The sampling devices were designed for a 12-in. diameter sewer, which was initially chosen as the sampling manhole but was subsequently abandoned since it constituted a junction which proved infeasible for sampling. The sampling site was relocated to a nonjunction manhole situated on a 15-in. diameter sewer which did not represent a transition for different upstream and downstream pipe inverts. The channel, however, through the manhole was 16 in. in diameter which required the design and manufacture of a suitable metal channel to compensate for the size differential between sampler and manhole channel.

Structural details of the supporting structure and manhole modifications are shown in Figure 4. Photographs of the installation are shown in Figure 5.

Bulk Sampler

Bulk liquid samples were collected with a sampler which allowed the removal of an entire 1-ft long section of combined sewage flow in the sewer. Figure 6 is a photograph of the bulk sampler. Fabrication drawings are provided in Appendix A. The bulk sampler consists of a thin-shell section containing hinged covers at both ends which are mechanically connected to function integrally. The sampler was inserted in the sewer with the covers in the up or open position allowing the combined sewage to

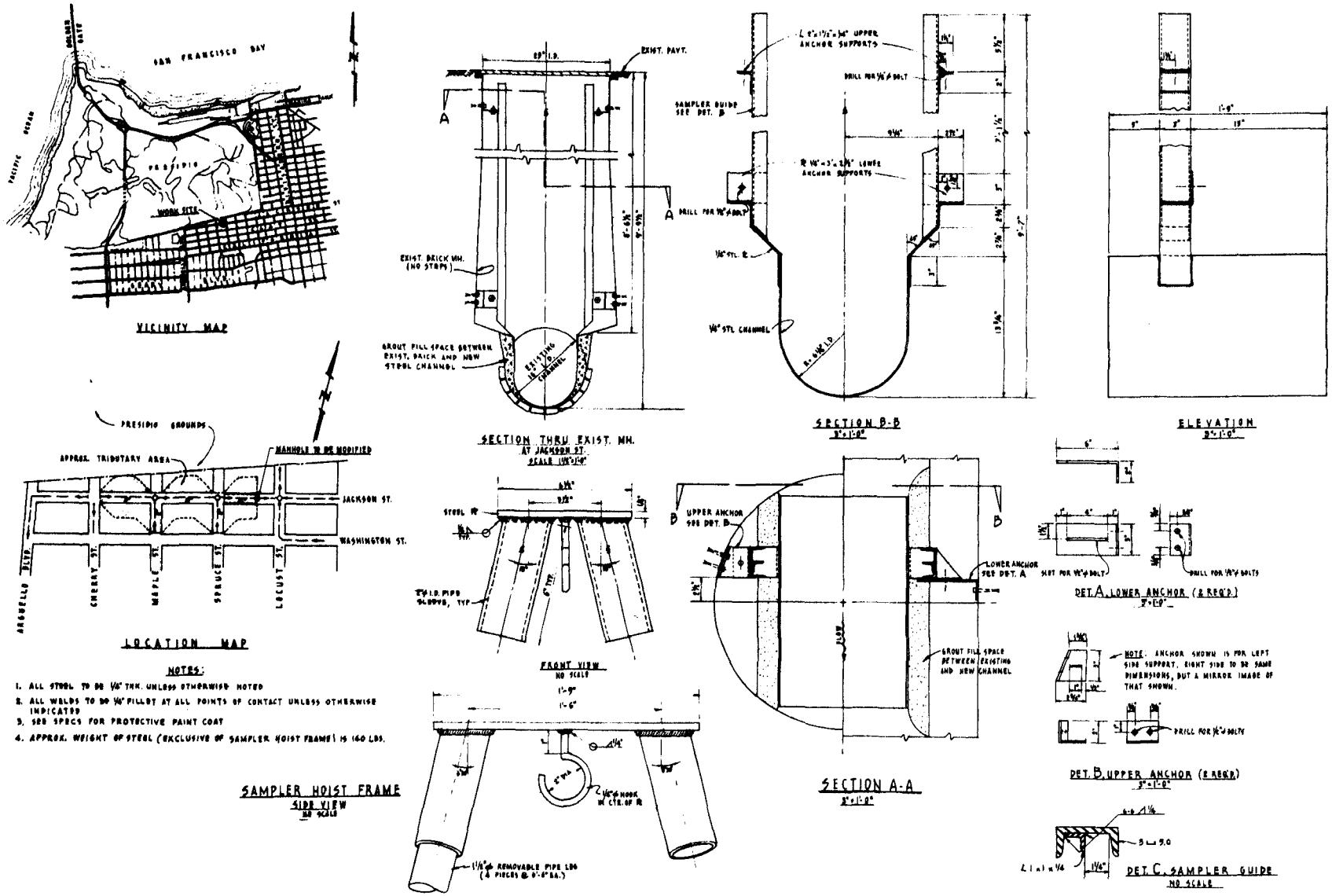

Figure 4. SAMPLER SUPPORTING STRUCTURE AND MANHOLE MODIFICATIONS

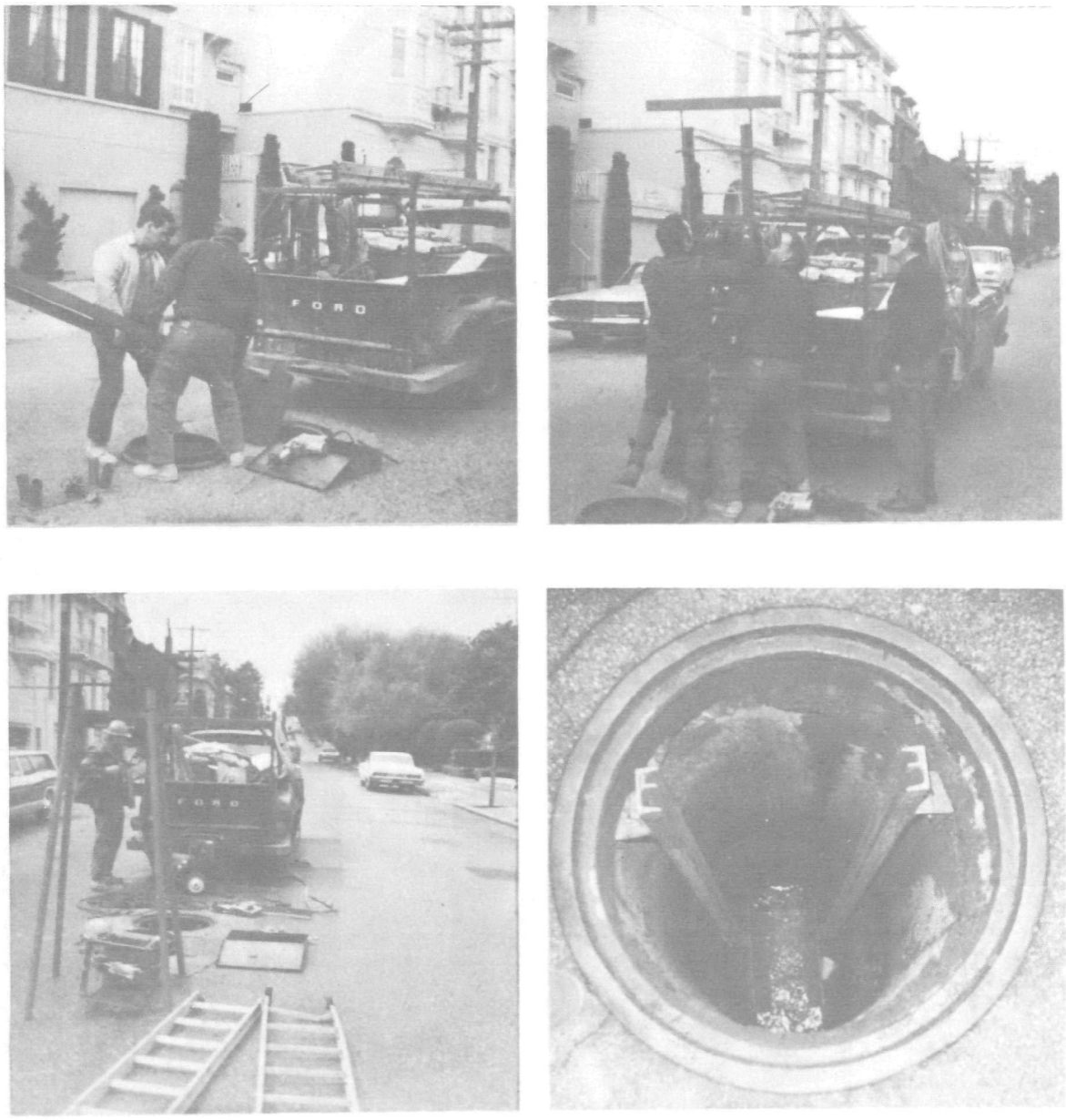

Figure 5. INSTALLATION OF SHEET METAL CHANNEL AND GUIDES FOR SAMPLING EQUIPMENT

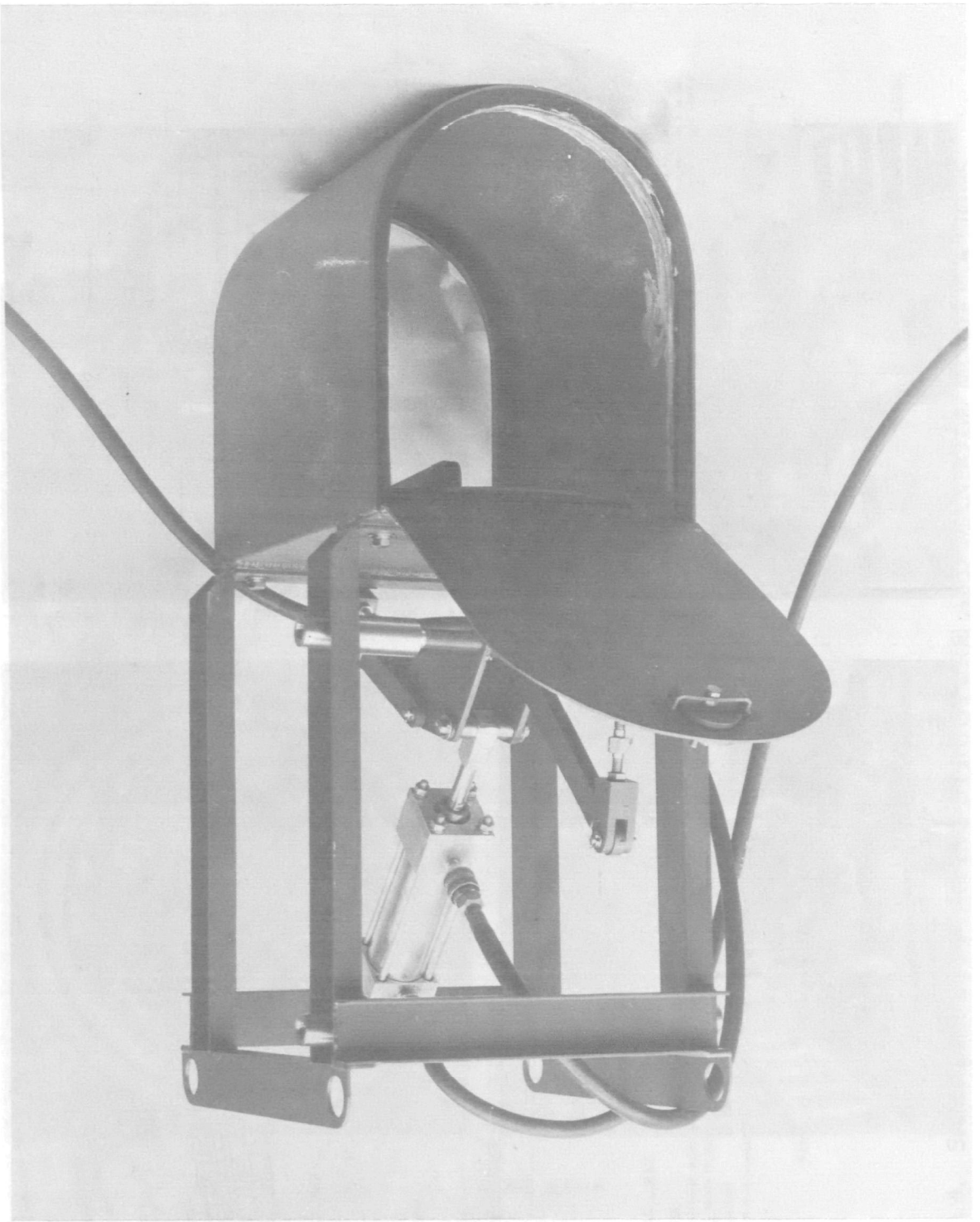

Figure 6. COMBINED SEWAGE BULK SAMPLER

flow through the section reasonably undisturbed. A liquid sample was captured by actuating an air cylinder which released the covers and trapped a plug of combined sewage inside the sampler. The air cylinder also maintained the covers in a closed position and assured maximum sealing pressure during removal of the sampler and sample from the sewer. The seal, cemented to the covers, consisted of a large spongy closed-cell neoprene that provided negligible leakage during transport from the manhole.

Screenings Sampler

The screenings samplers consist of a stainless steel basket made in each of four screen sizes--0.125-, 0.25-, 0.5-, and 1-in. aperture. A photograph of the 0.5-in. screening sampler is shown in Figure 7. Fabrication drawings are presented in Appendix B.

SAMPLING AND FLOW MEASUREMENTS

Both screenings and bulk samples were collected hourly for five consecutive hours during each of twelve rainfall events commencing as nearly as practical at the start of the first significant precipitation associated with the rainfall event. At the commencement of each wet-weather sampling episode, a bulk sample was collected and a screen was inserted for a recorded period of one-half hour or less depending upon the clogging rate of the particular screen. On the second, third, fourth, and fifth hour after commencement, the same sampling sequence was followed using the same screen size throughout the entire 5-hour sampling episode. At the conclusion of each rainfall event, five samples each of screenings and bulk therefore had been collected for laboratory analysis.

The wet-weather sampling sequence was conducted on twelve separate occasions using each of the four screen sizes for three separate rainfall events.

During the single dry-weather monitoring period, only flow measurements were taken over a 24-hour period at 2-hour intervals.

The combined sewage flow at the sampling site was determined just prior to and just after the collection of screenings samples.

Flow measurements were accomplished by using the continuous tracer dilution technique. The tracer rhodamine WT was injected at a controlled rate into a manhole approximately 480 feet upstream of the sampling manhole, which provided a minimum travel time of four minutes between injection and collection of diluted dye for subsequent measurement in the laboratory.

Figure 7. COMBINED SEWAGE SCREENINGS SAMPLER

ANALYSES

Physical, chemical, and biological analyses of collected combined sewage bulk and screenings samples were performed in accordance with the schedule presented in Table 3, and the Twelfth Edition of Standard Methods for the Examination of Water and Wastewater, except where noted otherwise. The character of the collected screenings samples were also described from visual observations.

CHLORINATION STUDIES

A sufficiently large composite bulk sample was withdrawn prior to a normal screen sampling period in the ongoing basic storm sampling program. Bulk samples, consisting of one or more grab storm samples made with the bulk sampler, were taken for laboratory studies to determine the effects of screening on chlorination practices. A small portion of the sample was withdrawn and split for establishing the breakpoint chlorination curve for 15-minute contact and the dosage required to provide a chlorine residual of 1.0 mg/l after 15-minute contact, and the total and fecal coliform densities before and after the required dosage of chlorine for this sample to provide a chlorine residual of 1.0 mg/l after 15-minute contact time. A characterization of the solids was performed on a portion of this sample.

The entire remaining composite bulk sample was passed through a 1-in. aperture screen. Again a small sample was withdrawn for analysis for the same chlorine, total and fecal coliforms, and solids determinations. The remaining composite bulk sample was successively filtered through Tyler screens or equivalent of 0.5 in., 0.263 in. (3 mesh), 0.131 in. (6 mesh), 0.065 in. (10 mesh), 0.0328 in. (20 mesh), and 0.0164 in. (35 mesh). After each screening the required analyses were performed on a portion of the remaining bulk sample.

Table 3

COMBINED SEWAGE ANALYSIS SCHEDULE

Analysis	Sample: Bulk	Sample: Screenings	Method
Total solids	x	x	Sample aliquot brought to dryness at 103°C, and weighed
Total volatile solids	x	x	Total solids sample fired at 550°C for 15 minutes
Total suspended solids	x		Sample aliquot passed through 0.45-μ glass filter, brought to dryness at 103°C, and weighed
Total volatile suspended solids	x		Total suspended solids sample fired at 550°C for 15 minutes
Settleable solids (by volume)	x		Standard Methods, p. 425
Floatable material	x		Floatable material concentrated on the surface of aliquot sample in 3-liter Teflon-coated flotation funnel, collected, washed and weighed
Biochemical oxygen demand	x	x	5-day, 20°C BOD, Standard Methods, p. 415
Chemical oxygen demand	x	x	Standard Methods, p. 510
Hexane extractable material (oil & grease)	x	x	Liquid-liquid extraction using Pearson-Thomas extractor. Soxhlet extraction of dry material, Standard Methods, p. 384

Table 3 (continued)

COMBINED SEWAGE ANALYSIS SCHEDULE

Analysis	Sample: Bulk	Sample: Screenings	Method
Total coliforms	x	x	Multiple (3) Tube MPN determination using lactose broth for presumptive test and brilliant green bile broth for confirmed test, Standard Methods, p. 596
Fecal coliforms	x	x	Multiple (3) Tube MPN determination using E-C medium and elevated temperature test, Standard Methods, p. 599
Fecal streptococci	x	x	Multiple (3) tube MPN determination using azide dextrose broth for confirmative test, Standard Methods, p. 620
Particle size distribution	x	x	Aliquot serially passed through standard sieves, Nos. 6, 18, 50, and 200, with 100 ml of fecal filtrate passed through a GF/C Glass fiber filter. Residues dried at 103° C and weighed

Section V

SEWAGE CHARACTERIZATION

Combined sewage characteristics were observed at the Jackson Street sampling site on twelve separate occasions during the wet-weather seasons of 1968-1969 and 1969-1970. Dry-weather flows were measured at the sampling manhole over a continuous 24-hour period on 24-25 April 1969 to establish background sanitary flow rates.

The first sampling episode occurred on 4-5 April 1969 and was the only one conducted during the 1968-1969 rainy season, which produced an above average (20.78 in.) seasonal precipitation amounting to 25.09 inches. The remaining eleven sampling episodes occurred on 5 November 1969, 19 December 1969, 21 December 1969, 13 January 1970, 20 January 1970, 27 January 1970, 13 February 1970, 28 February 1970, 4 March 1970, 13 April 1970, and 13 May 1970. This wet-weather season resulted in a total precipitation of 20.80 inches, which was very nearly an average wet-weather season.

A summary of rainfall characteristics associated with the twelve wet-weather sampling episodes is presented in Table 4. The largest total amount of continuous precipitation, 2.31 inches, occurred during a 29-hour period on 20-21 January 1970. The maximum recorded intensity of that single storm was 0.25 in./hr, which occurred during the same hour that the combined sewage sampling commenced. For the twelve single continuous rainfall events occurring during the wet-weather sampling episodes, the maximum rainfall intensity of 0.39 in./hr was reported two hours prior to commencement of sampling on 4 March 1970.

The last two sampling episodes were conducted during periods of very light rainfall and most likely represent conditions more typical of dry-weather flow than wet-weather flow. Therefore results from the last two sampling episodes have been excluded from the analysis in some instances, which are noted by "10 storms," so as not to bias the correlations and evaluations.

Local climatological data for the Federal Office Building during the period extending from January 1969 to June 1970 are given in Appendix C. Rainfall intensity-duration-frequency relations for San Francisco are provided in Appendix D.

SEWAGE FLOWS

The temporal distributions of the observed sewage flows in the sampling manhole on Jackson Street and the recorded precipitation at the Federal Office Building on Fulton Street about two miles easterly are shown in Figure 8.

Table 4

SUMMARY OF PRECIPITATION AT FEDERAL OFFICE BUILDING ASSOCIATED WITH WET-WEATHER MEASUREMENT

Date	Day	Continuous Total Rainfall in.	Maximum Intensity in./hr	Duration of Storm hr	Antecedent Dry Period hr
4 Apr 69	Fri	0.51	0.12	13	25
5 Nov 69	Wed	0.38	0.10	7	461
19 Dec 69	Fri	0.51	0.11	12	7
21 Dec 69	Sun	0.66	0.18	9	21
13 Jan 70	Tue	0.23	0.07	11	28
20 Jan 70	Tue	2.31	0.25	24	15
27 Jan 70	Tue	0.49	0.29	4	2
13 Feb 70	Fri	0.09	0.04	4	12
28 Feb 70	Sat	0.43	0.10	11	4
4 Mar 70	Wed	1.17	0.39	9	15
13 Apr 70	Mon	0.01	0.01	5	718
13 May 70	Wed	0.03	0.01	3	9

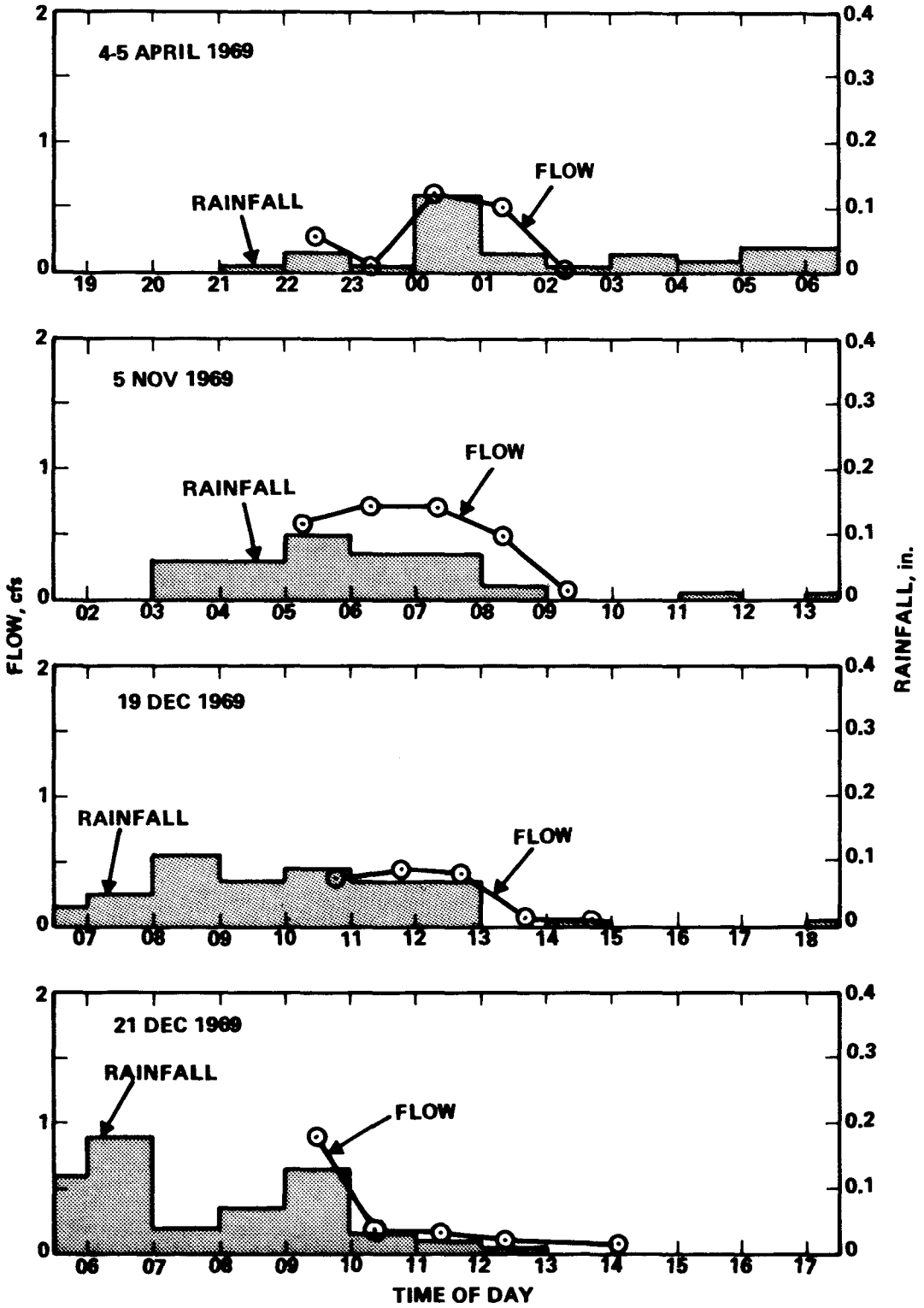

Figure 8. PRECIPITATION AT SAN FRANCISCO FEDERAL OFFICE BUILDING AND COMBINED SEWAGE FLOW AT JACKSON STREET SAMPLING SITE

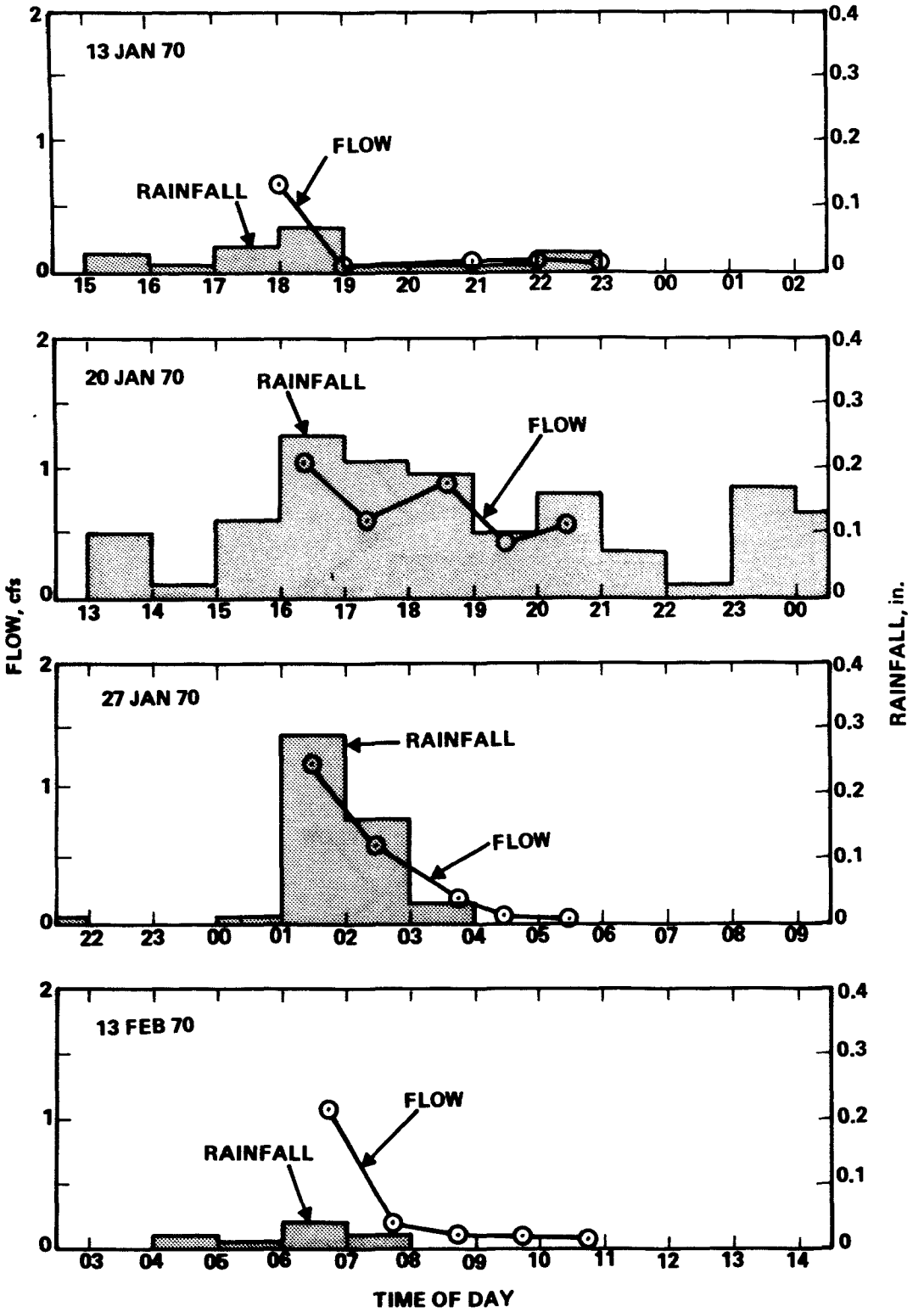

Figure 8. PRECIPITATION AT SAN FRANCISCO FEDERAL OFFICE BUILDING AND COMBINED SEWAGE FLOW AT JACKSON STREET SAMPLING SITE (Continued)

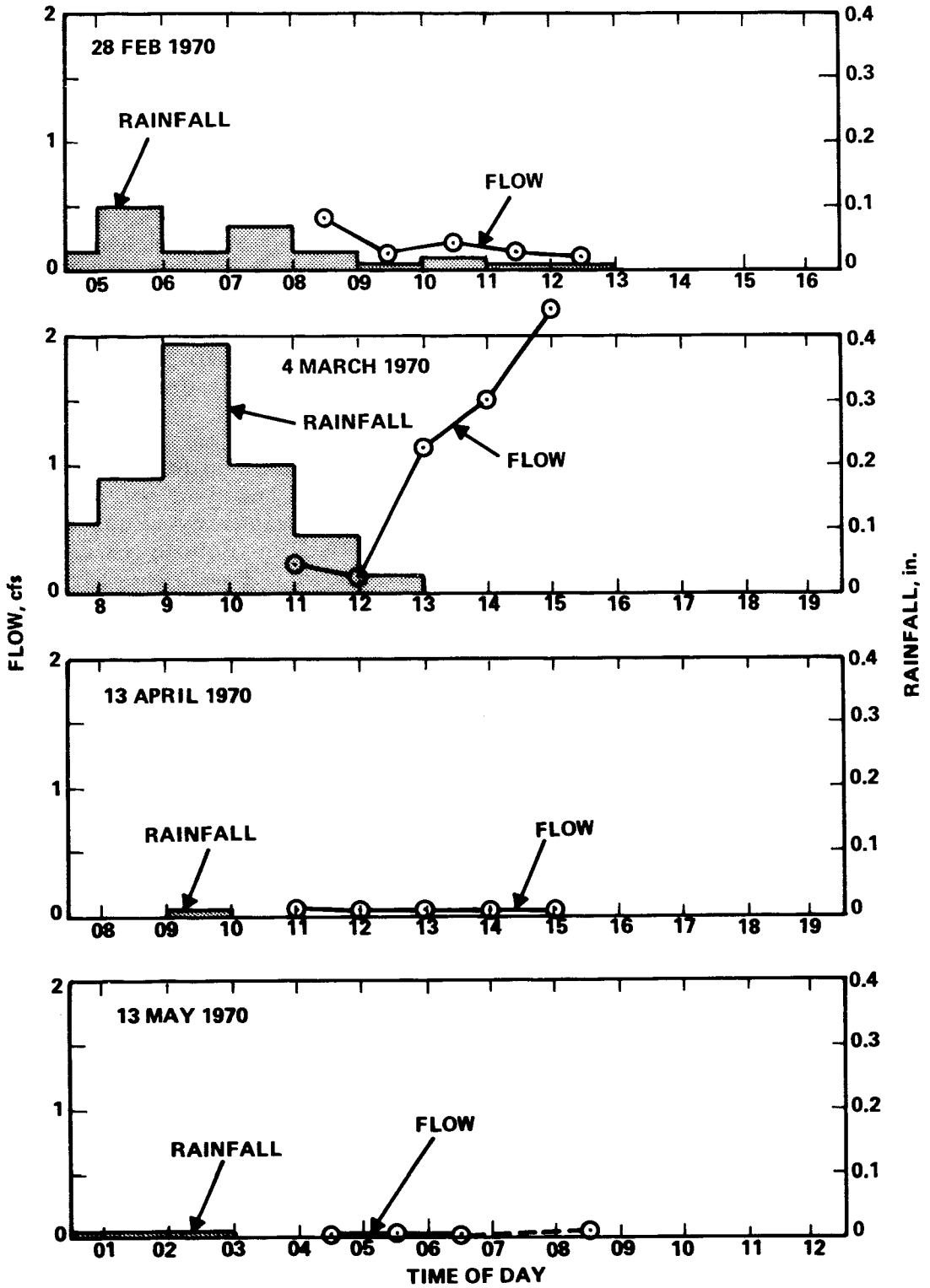

Figure 8. PRECIPITATION AT SAN FRANCISCO FEDERAL OFFICE BUILDING AND COMBINED SEWAGE FLOW AT JACKSON STREET SAMPLING SITE (Continued)

A wide range of combined sewer flow rates were observed representing every hour of the day and night. Extreme combined sewer flows in the 15-in. diameter sewer were a low of 0.022 cfs and a high of 2.22 cfs. The largest variation in flow occurring during any 5-hour sampling episode was a 30-fold decrease from 1.23 to 0.039 cfs. The largest hourly variation was a 9-fold increase from 0.124 to 1.13 cfs.

Averages of the five hourly combined sewer flows observed during each of the twelve sampling episodes were, chronologically, 0.299, 0.516, 0.271, 0.286, 0.202, 0.707, 0.421, 0.309, 0.213, 1.043, 0.058, and 0.036 cfs. All but the last two sampling episodes were conducted during periods where the combined sewer flows contained sizable storm runoff fractions, since for the dry-weather flow the maximum consecutive 5-hour average of observed flows was 0.068 cfs and the daily average was 0.041 cfs.

The dry-weather sewage flow observed at the Jackson Street sampling manhole is presented in Figure 9. Because the hourly flow values were quite variable as one would expect for a small tributary area, the data were smoothed utilizing polynominal curve-fitting techniques and are best represented by the segmented curve shown. From the curve, the average hourly sanitary sewage flow was 0.0423 cfs. The peak hourly flow of 0.103 cfs occurred at 0800 hours and was 243% of the average flow. Minimum flow occurred at 0400 hours and at 0.0080 cfs was 19% of the average. A second peak of 0.049 cfs occurred at 2000 hours and another of 0.045 cfs at midnight.

Regression analyses, summarized in Table 5, revealed no significant correlation at the 95-% confidence level between the calculated storm flow (observed combined flow less the appropriate sanitary sewage flow from the curve of Figure 9) and the reported rainfall upon either advancement or retardation of time to compensate for the distance between the two observation points. The best relation was obtained, however, when the corresponding time of rainfall occurrence to storm runoff flow was increased by one hour, indicating that rainfall occurred on the average at the combined sewage sampling site perhaps one hour before it occurred at the weather recording station. In general this time shift would be expected since most of the weather in the area moves in easterly from the Pacific Ocean.

Due to the poor temporal correlation between the calculated storm flows and the available rainfall intensity, it is difficult to ascertain what relation, if any, existed between the intensity and duration noted at the Federal Office Building two miles distant and that occurring in the study area contributing to surface runoff and subsequent combined sewer flows.

The field sampling activities for the most part were initiated by an observer at the North Point Sewage Treatment Plant, which serves the study area, upon the first sign of combined sewer overflows from the sewer system.

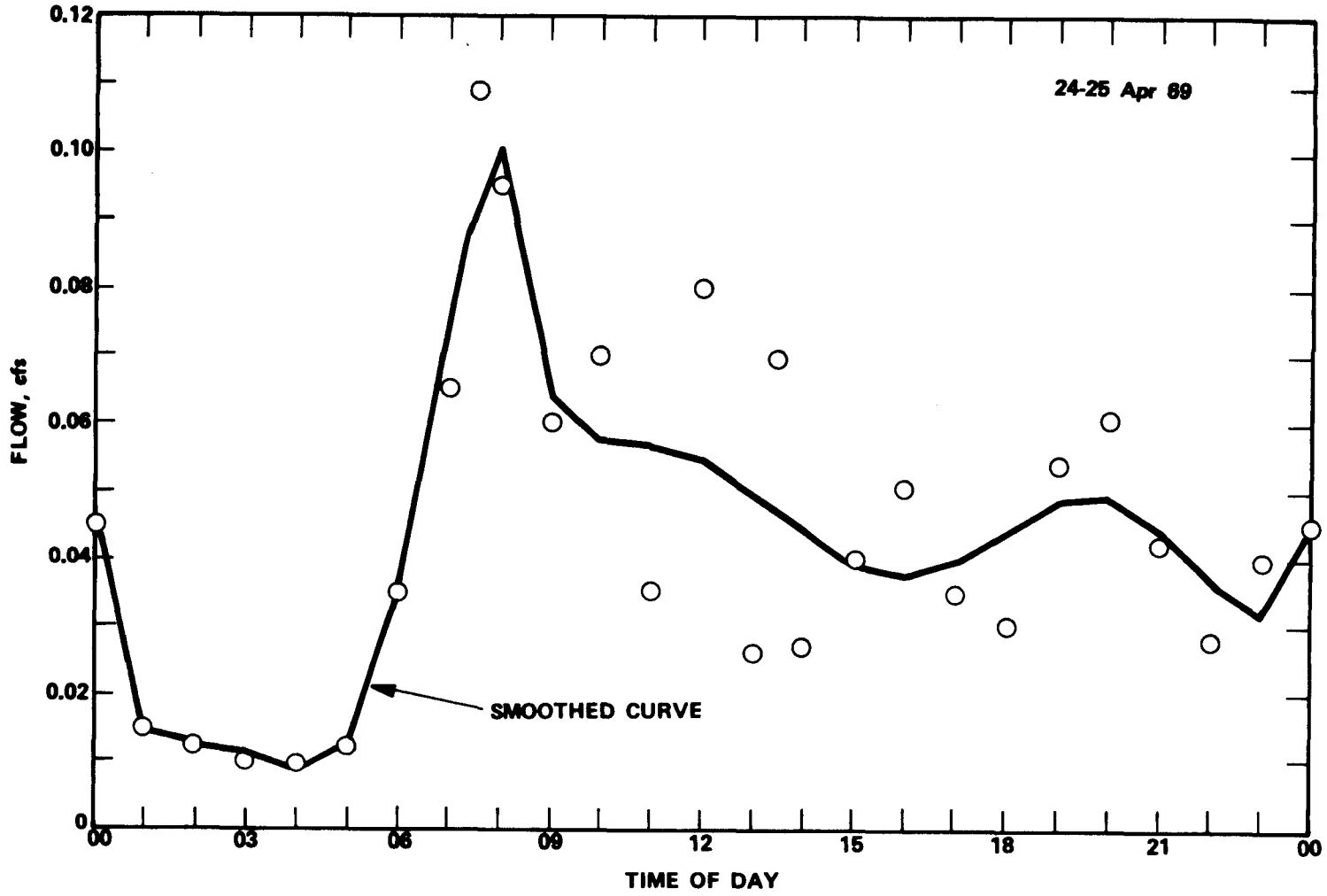

Figure 9. DIURNAL DISTRIBUTION OF DRY-WEATHER SEWAGE FLOW AT JACKSON STREET SAMPLING SITE

Table 5

CORRELATIONS BETWEEN PRECIPITATION AT FEDERAL OFFICE BUILDING AND CALCULATED STORM RUNOFF FLOW AT SEWAGE SAMPLING LOCATION
10 Storms

X	Y	Form[a]	Equation Coefficient A	Equation Coefficient B	Correlation Coefficient	No. of Data	Significance: Equation Coefficient[b]	Significance: Correlation Coefficient[c]
$Rain_{-2hr}$	Flow	1	0.304	1.17	0.217	48	No	No
$Rain_{-1hr}$	Flow	5	18.5	-35.8	0.127	48	No	No
Rain	Flow	5	22.1	-87.8	0.311	48	Yes	No
$Rain_{+1hr}$	Flow	2	0.0889	11.3	0.558	48	Yes	No
$Rain_{+2hr}$	Flow	2	0.126	9.03	0.326	48	Yes	No

[a] 1. $Y=A+B$; 2. $Y=A \exp(BX)$; 3. $Y=AX^B$; 4. $Y=A+(B/X)$; 5. $Y=1/(A+BX)$; 6. $Y=X/(A+BX)$

[b] F-statistic significant at the 95-% confidence level

[c] χ^2-statistic significant at the 95-% confidence level

SEWAGE QUALITY

Complete detailed physical, chemical, and biological analyses of combined sewage bulk samples collected from the Jackson Street manhole are presented in Appendix E.

Average combined sewage bulk statistics observed for the 10 storms are presented in Table 6. In all characteristics the observations, as expected, were highly variable, with the values of the standard deviations nearly as large or larger than the values of the means.

Results of particle size distribution analyses indicates that the "size" of solids contained in the combined sewage were for the most part extremely small. The average median size, which represents the size in the particle distribution which has one-half the total weight of particles above and one-half below that size, was 0.0068 in. Moreover 64% of all bulk samples analyzed for particle size distribution passed completely through a 0.131-in. aperture screen, with no solids retained.

The overall average quality of the screenings collected with all sizes of screens from the combined sewage flow during the 10 storms is presented in Table 7. In comparison to the bulk, the observed physical and chemical characteristics of the screenings were less variable, and the bacterial concentrations were somewhat more variable.

Complete detailed analyses of the physical, chemical, and biological characteristics of the combined sewage screenings collected from the Jackson Street manhole are provided in Appendix F.

SEWAGE CONSTITUENT CORRELATIONS

Least-squares regression analyses were performed to determine whether statistically significant relationships exist between any pair of combined sewage constituents. Data pairs were assumed to be related by one of six equation forms, which were utilized to ascertain the best correlation. The significance of the resulting correlation was tested at the 95-% confidence level for two conditions. The first check was an F-test (Ref. 1), which tests the hypothesis that the slope of the regression is significantly different from zero. If so, it is assumed, at the selected level of confidence, that the pair of variables are correlated. For example, one constituent concentration increases as the other increases. The hypothesis is accepted if the calculated F is larger than the tabulated F at the selected level of confidence, or in this case $F > F_{0.95}$. The value of F is $\rho^2(N-2)/(1-\rho^2)$, where ρ is the correlation coefficient and N is the number of data points or observations. The degrees of freedom for this test is N-2.

The second, and much more powerful, test was a χ^2-test, which tests the confidence with which the equation can predict one variable given

Table 6

COMBINED SEWAGE BULK QUALITY CHARACTERISTICS
10 Storms

Constituent	Mean	Range	Standard Deviation	No. of Data
Total solids, mg/l	209	44-575	138	50
Total volatile solids, mg/l	105	16-420	87.5	50
Total suspended solids, mg/l	67.6	4-426	80	50
Total volatile suspended solids, mg/l	52.2	4-373	69.7	50
Settleable solids, ml/l	2.58	0.05-14	3.22	45
Floatable solids, mg/l	3.89	0.6-22.3	3.58	45
Biochemical oxygen demand, mg/l	49	<1.5-202	57.2	47
Chemical oxygen demand, mg/l	155	16.9-626	132	50
Hexane extractable material, mg/l	12.3	1.3-54.4	12.9	50
Total coliforms, MPN/100ml	2.88×10^6	2.3×10^4-1.6×10^7	3.98×10^6	46
, log MPN/100ml	8.32×10^5			46
Fecal coliforms, MPN/100ml	6.40×10^5	$<3 \times 10^3$-$>1.1 \times 10^7$	1.09×10^6	43
, log MPN/100ml	1.55×10^5			43
Fecal streptococci, MPN/100ml	1.29×10^5	<30-2.4×10^6	3.93×10^5	39
, log MPN/100ml	2.09×10^4			39

Table 7

COMBINED SEWAGE SCREENINGS QUALITY CHARACTERISTICS
10 Storms

Constituent	Mean	Range	Standard Deviation	No. of Data
Total solids, g	21.3	5-77	14	50
Total volatile solids, g	18.8	4.6-64.5	12	50
Biochemical oxygen demand, mg/g	484	1.2-1,898	369	49
Chemical oxygen demand, mg/g	1,940	9.7-5,490	1,577	50
Hexane extractable material, mg/g	90.5	0.42-286	60.5	49
Total coliforms, MPN/g	2.15×10^{9}	$<5.79 \times 10^{5}$-2.8×10^{10}	4.85×10^{9}	49
, log MPN/g	3.55×10^{8}			49
Fecal coliforms, MPN/g	3.34×10^{8}	$<3.6 \times 10^{4}$-1.16×10^{10}	1.87×10^{9}	41
, log MPN/g	4.67×10^{7}			41
Fecal streptococci, MPN/g	7.04×10^{7}	$<2.4 \times 10^{3}$-6.31×10^{8}	1.37×10^{8}	42
, log MPN/g	9.55×10^{6}			42

the other. The hypothesis for this test is that the explained variance is greater than the product of the residual variance and the value of χ^2 at the selected level of confidence, or $\sigma_E^2 > \chi_{0.95}^2 \sigma_R^2$. The appropriate degrees of freedom for this test is one. Whereas many correlations passed the F-test, many failed the χ^2-test.

Summarizing, the test for correlation (F-test) indicates whether or not it can be assumed that a change in the independent variable will cause a change in the dependent variable. The χ^2-test indicates how accurately this change can be predicted.

Combined Sewage Bulk

Regressions were performed between all of the observed combined sewage bulk constituent concentrations, consisting of total solids (TS), total volatile solids (TVS), total suspended solids (TSS), total volatile suspended solids (TVSS), settleable solids (SS), floatable solids (F), biochemical oxygen demand (BOD), chemical oxygen demand (COD), hexane extractable material (HEM), total coliforms (TC), fecal coliforms (FC), and fecal streptococci (FS). Summaries of all regression analyses on combined sewage bulk characteristics are presented in Appendix G.

Of the regressions performed, only three proved significant at the 95-% confidence level. These are presented in Table 8 with their respective correlation coefficients, indicating that the volatile fractions of the various types of solids contained in combined sewage can be predicted from a measure of the combined fixed and volatile solids. One relation indicates also a statistically significant relation between the volatile fractions of suspended solids and total solids. The statistically significant relations for the combined bulk constituents are presented in Figures 10, 11, and 12 with the observed data points.

Combined sewage bulk samples were characterized by a particle size distribution analysis from which a single descriptor was developed and called the median size, which represents the size in the particle distribution which has one-half the total weight of particles above and one-half below that size. Regression analyses were performed between this parameter and normalized combined sewage bulk characteristics, namely the ratios of settleable solids and floatable solids to total suspended solids and the ratios of biochemical oxygen demand, chemical oxygen demand, hexane extractable material, total coliforms, fecal coliforms and fecal streptococci to total volatile solids. No statistically significant correlations were obtained at the 95-% confidence level; summarized regression analyses of these data are given in Appendix H.

Combined Sewage Screenings

Correlations between total solids (TS), total volatile solids (TVS), biochemical oxygen demand (BOD), chemical oxygen demand (COD), hexane

Table 8

STATISTICALLY SIGNIFICANT CORRELATIONS BETWEEN COMBINED SEWAGE BULK CONSTITUENTS AT THE 95-% CONFIDENCE LEVEL

10 Storms

Relation[a]	Correlation Coefficient
$TVS = 0.261TS^{1.11}$	0.934
$TVSS = 0.715TVS - 23.0$	0.898
$TVSS = 0.864TSS - 6.20$	0.991

[a] TVS = total volatile solids, mg/l
TS = total solids, mg/l
TVSS = total volatile suspended solids, mg/l
TSS = total suspended solids, mg/l

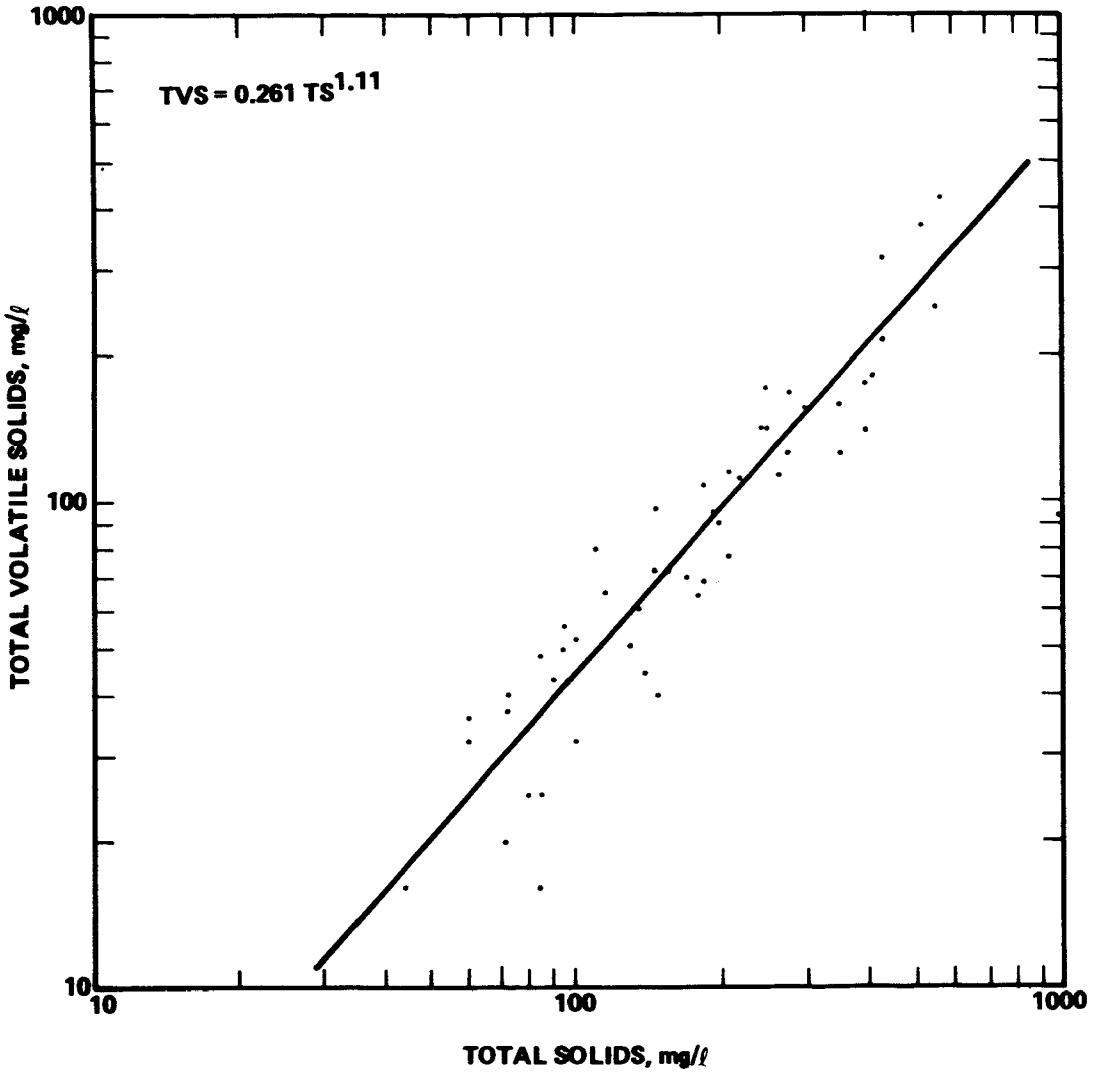

Figure 10. RELATIONSHIP BETWEEN TOTAL SOLIDS AND TOTAL VOLATILE SOLIDS OF COMBINED SEWAGE BULK
10 Storms

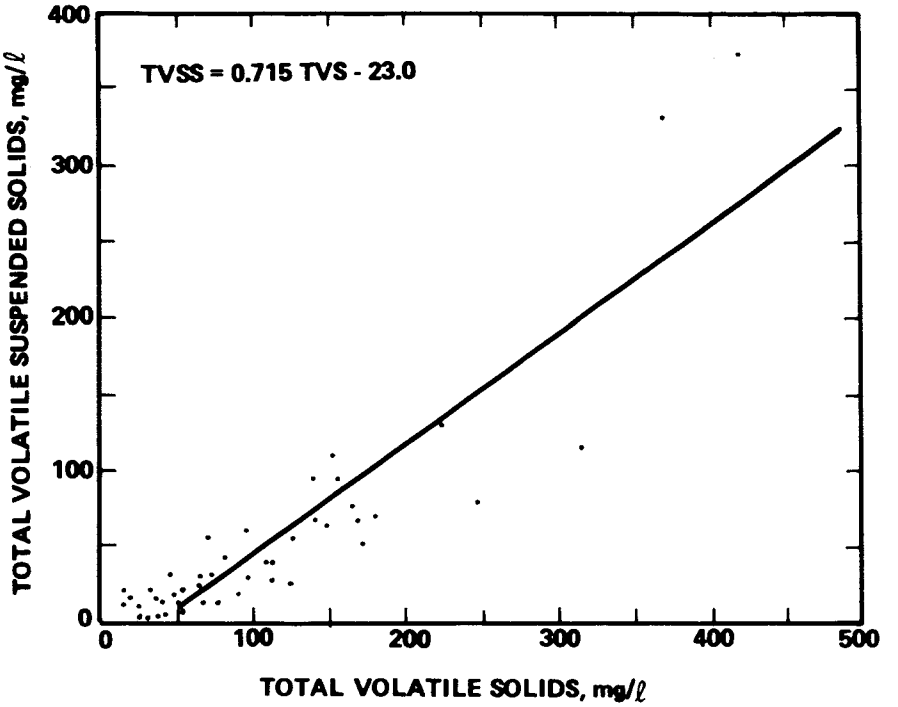

Figure 11. RELATIONSHIP BETWEEN TOTAL VOLATILE SOLIDS AND TOTAL VOLATILE SUSPENDED SOLIDS OF COMBINED SEWAGE BULK
10 Storms

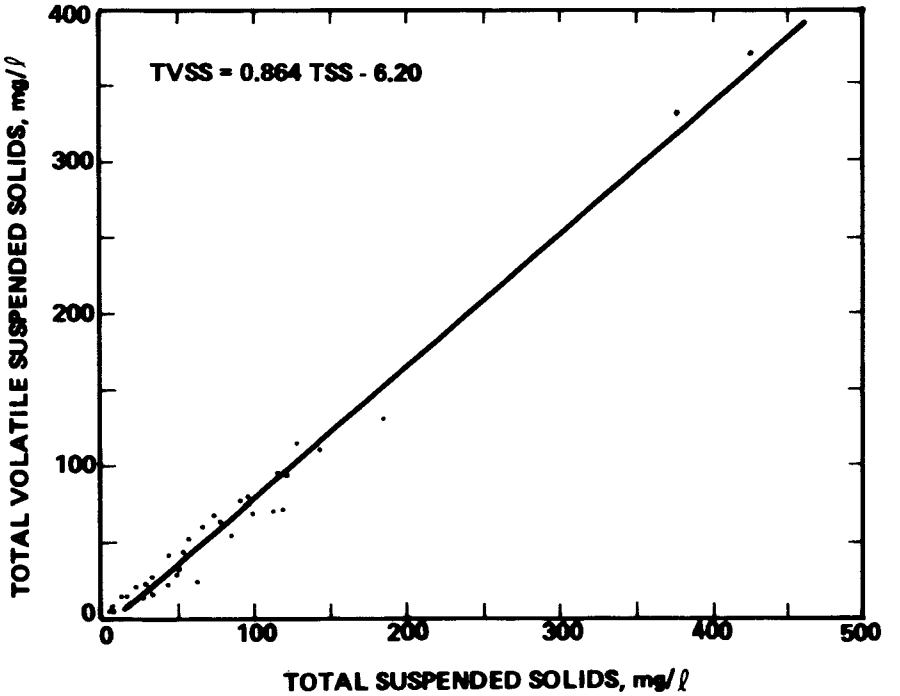

Figure 12. RELATIONSHIP BETWEEN TOTAL SUSPENDED SOLIDS AND TOTAL VOLATILE SUSPENDED SOLIDS OF COMBINED SEWAGE BULK
10 Storms

extractable material (HEM), total coliforms (TC), fecal coliforms (FC), and fecal streptococci (FS) concentrations of screenings collected from the combined sewage by all four sizes of screen apertures revealed four statistically significant relations, which are presented in Table 9.

For the screenings, the total volatile solids concentration is correlated to the total solids concentration, and indicates that at least 85% of the weight of total solids is comprised of volatile solids. Other statistically significant correlations exist between biochemical oxygen demand and hexane extractable material, amd between chemical oxygen demand and hexane extractable material. These relationships and the observed data points are presented in Figures 13, 14, 15, and 16.

Summaries of the 28 regressions performed on the combined sewage screenings are presented in Appendix I.

Table 9

STATISTICALLY SIGNIFICANT CORRELATIONS BETWEEN COMBINED SEWAGE SCREENINGS CONSTITUENTS AT THE 95-% CONFIDENCE LEVEL

10 Storms

Relation[a]	Correlation Coefficient
$TVS = 0.856\ TS + 0.526$	0.998
$COD = \frac{BOD}{0.120 + 0.00160BOD}$	0.956
$HEM = \frac{BOD}{2.90 + 0.00840BOD}$	0.999
$HEM = \frac{COD}{22.1 - 0.0166COD}$	0.960

[a]TVS = total volatile solids, g
TS = total solids, g
COD = chemical oxygen demand, mg/g
BOD = biochemical oxygen demand, mg/g
HEM = hexane extractable material, mg/g

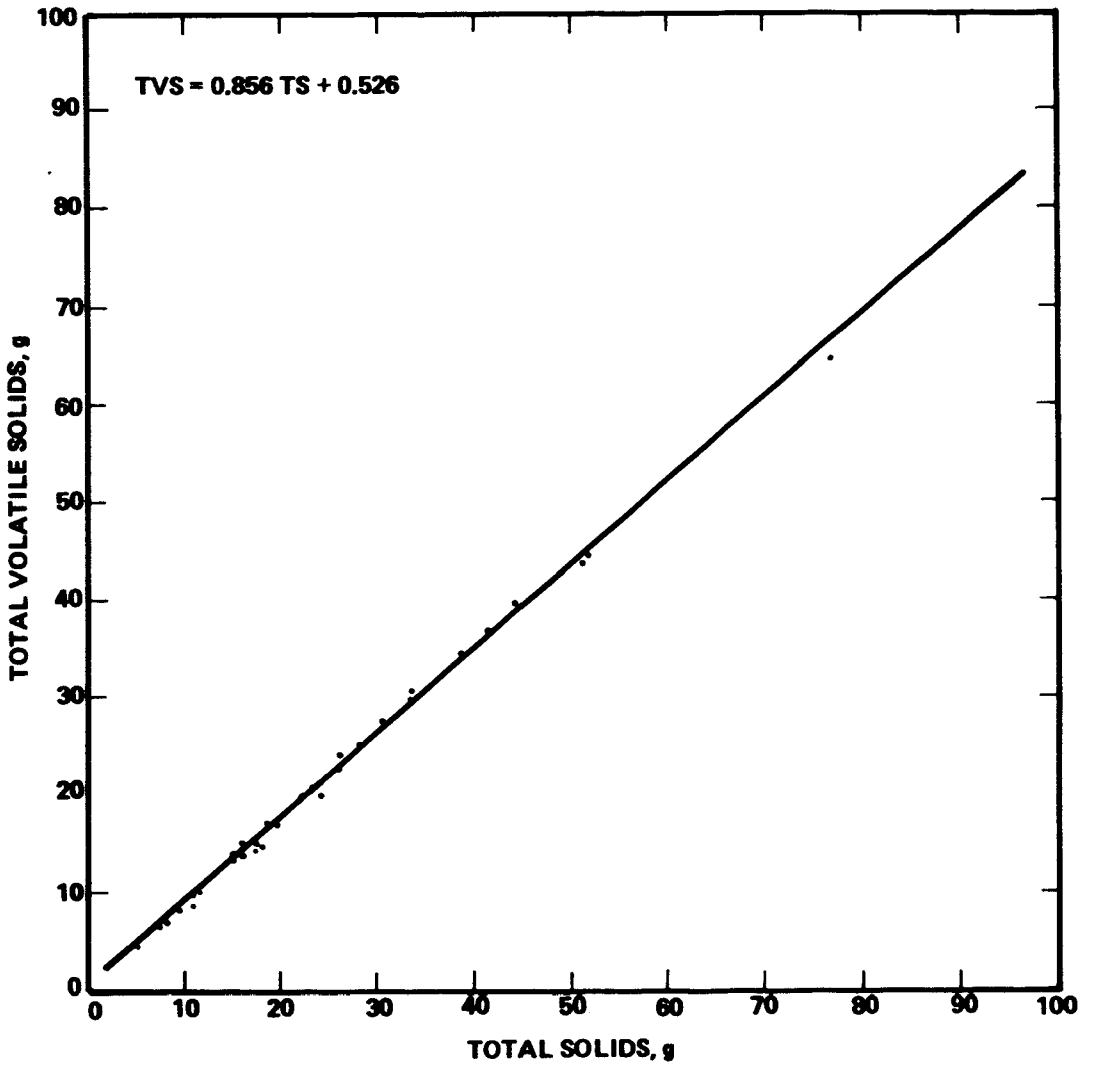

Figure 13. RELATIONSHIP BETWEEN TOTAL SOLIDS AND TOTAL VOLATILE SOLIDS OF COMBINED SEWAGE SCREENINGS
10 Storms

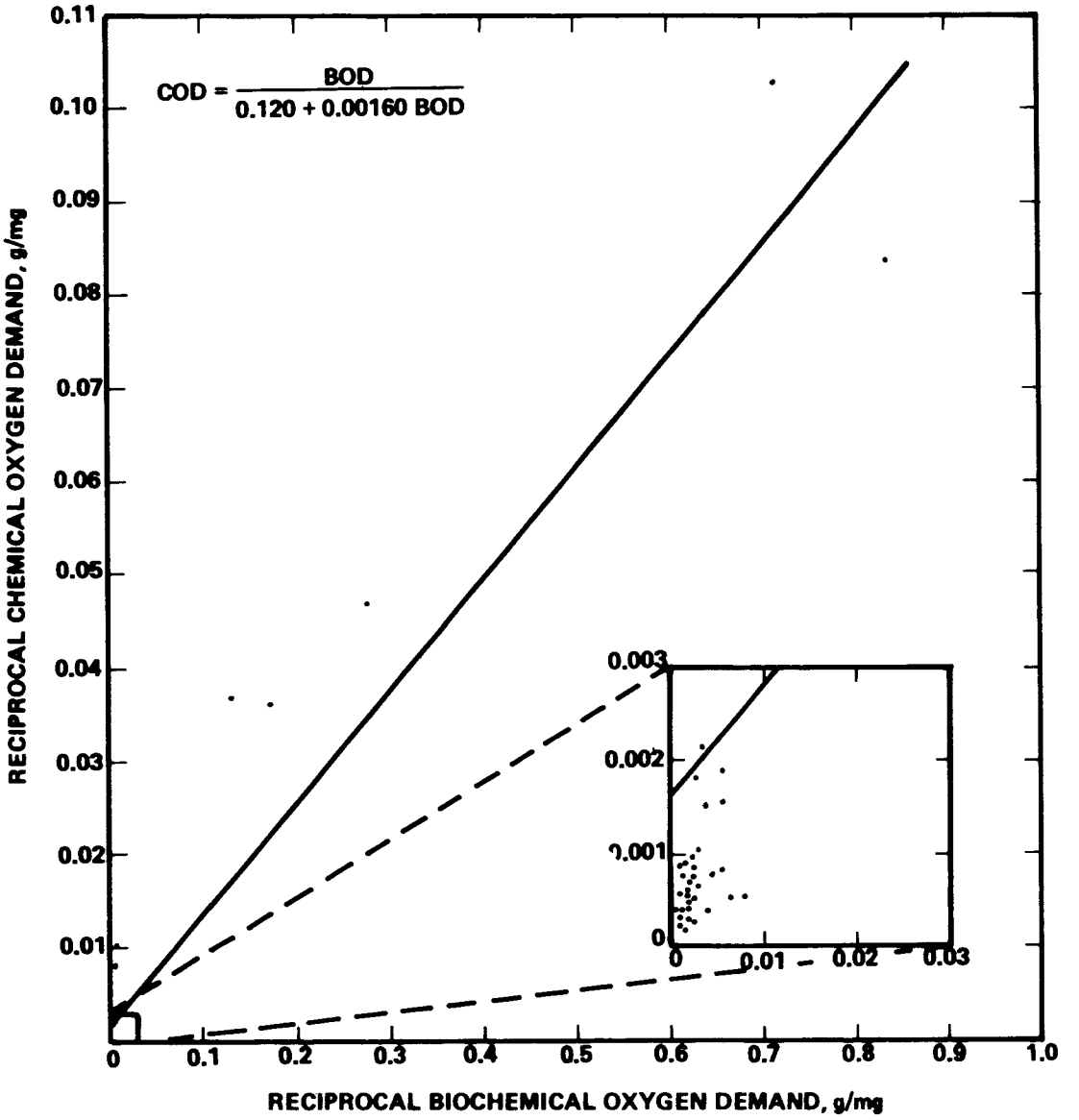

Figure 14. RELATIONSHIP BETWEEN BIOCHEMICAL OXYGEN DEMAND AND CHEMICAL OXYGEN DEMAND OF COMBINED SEWAGE SCREENINGS
10 Storms

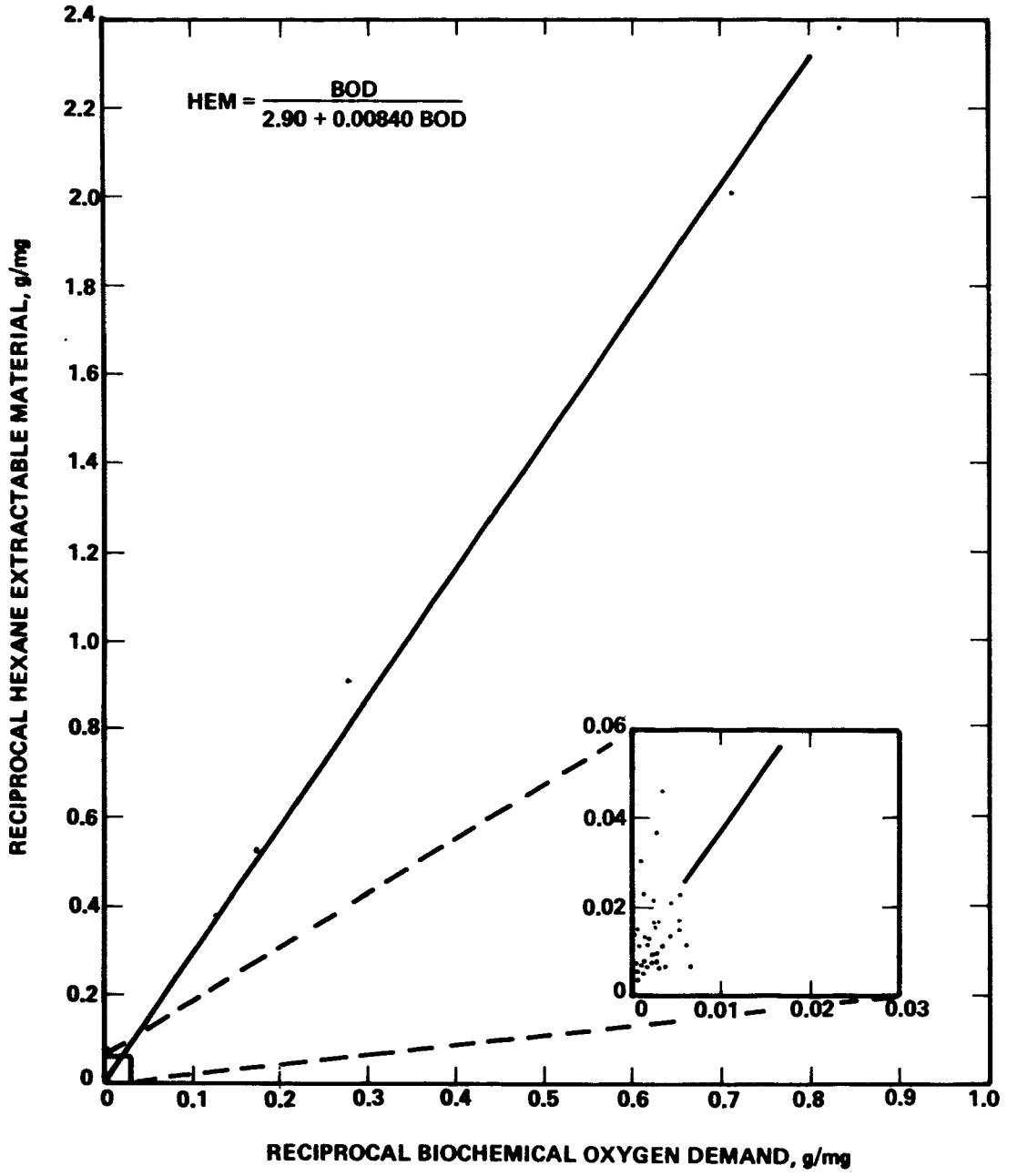

Figure 15. RELATIONSHIP BETWEEN BIOCHEMICAL OXYGEN DEMAND AND HEXANE EXTRACTABLE MATERIAL OF COMBINED SEWAGE SCREENINGS
10 Storms

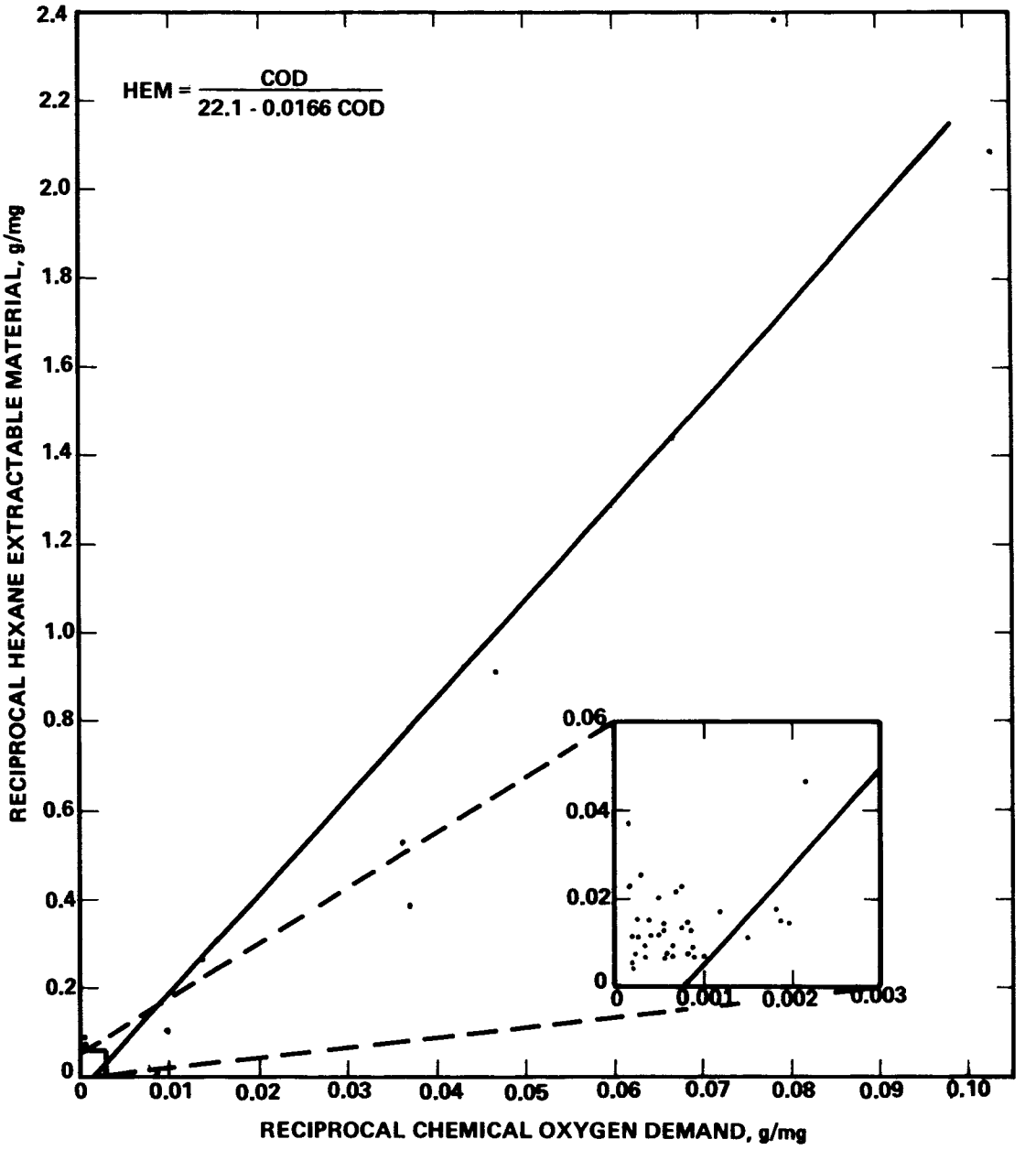

Figure 16. RELATIONSHIP BETWEEN CHEMICAL OXYGEN DEMAND AND HEXANE EXTRACTABLE MATERIAL OF COMBINED SEWAGE SCREENINGS
10 Storms

Section VI

EFFECTS OF SCREENING DEVICES

The placement of screening devices in combined sewers could perhaps provide two distinct functions. First the screen could remove pollutants from combined sewage prior to its overflow, thereby reducing the pollutant load to receiving waters. Of particular significance would be the removal of floatable and settleable matter, which upon discharge to receiving waters manifests itself by forming objectionable floating aggregations of debris and sewage solids and creating banks of accumulating sludges that can become septic and unsightly in character. Secondly, the removals of solid materials by screens could effect measurable reductions in chlorine requirements where disinfection of combined sewer overflows is practiced or indicated. The presence of solids influence chlorine demand and bacterial kills by immediate and gradual chemical consumption of the available chlorine and by physically shielding the bacteria from the remaining effective chlorine in solution.

Both of these effects were studied in this program to determine the extent to which pollutant loads and chlorination requirements are reduced by the placement of screens in combined sewers.

CONSTITUENT REMOVALS

Qualitative descriptions of visible materials collected on the screens placed in the Jackson Street sampling manhole are presented in Table 10. Visible materials collected consisted mostly of fecal matter, paper, leaves, and cigarettes. The nature of the collected visible screenings appears to be independent of the size of screen aperture.

Removal efficiencies of total solids (TS), total volatile solids (TVS), biochemical oxygen demand (BOD), chemical oxygen demand (COD), hexane extractable materials (HEM), total coliforms (TC), fecal coliforms (FC), and fecal streptococci (FS) provided by each insertion of the screenings sampler into the combined sewage were estimated and are presented in Table 11. The amount of constituent passing the screen and subject to removal during the insertion was assumed to be the simple average of the mass rates of the constituent determined from the routine bulk sewage sampling immediately preceding and following the insertion of the screen. Irrespective of screen aperture size, removals of total solids ranged from 0.1 to 8.1%, with an overall average of 1.4%. For total volatile solids, the average removal was larger at 2.7% and individual removals ranged from 0.2 to 11.6%. Biochemical oxygen demand removals averaged 3.9% and ranged from 0.1 to 17.2%. A similar average removal of 3.8% was observed for chemical oxygen demand, with individual removals ranging from 0.1 to 15.6%. Removal efficiencies of hexane extractable material ranged

Table 10

QUALITATIVE DESCRIPTION OF COMBINED SEWAGE SCREENINGS

Date	Time of Immersion	Screen Size, in.	Description
4 Apr 69	-	0.5	Not analyzed
5 Nov 69	0520	0.5	Leaves, paper, twigs
	0620		Leaves, cigarettes, fecal material
	0720		Leaves, fecal material
	0820		Paper, cigarettes, fecal material
	0920		Paper, fecal material
19 Dec 69	1045	0.25	Leaves, fecal material
	1145		Twigs, paper, fecal material
	1240		Mostly fecal material
	1340		Mostly fecal material
	1440		Paper, Fecal material
21 Dec 69	0930	0.25	Mostly leaves and twigs
	1025		Mostly leaves and twigs
	1125		Mostly fecal material
	1225		Mostly fecal material
	1410		Mostly fecal material
13 Jan 70	1800	1.0	Mostly fecal material
	1900		Mostly fecal material
	2100		String, cloth, fecal material
	2200		Mostly fecal material
	2300		Mostly leaves
20 Jan 70	1625	1.0	Leaves, cigarettes, fecal material
	1725		Leaves, cloth, plastic material
	1835		Leaves, cloth, cigarettes
	1930		Leaves, cloth, cigarettes
	2030		Leaves, cloth, string

Table 10 (continued)

QUALITATIVE DESCRIPTION OF COMBINED SEWAGE SCREENINGS

Date	Time of Immersion	Screen Size, in.	Description
27 Jan 70	0130	0.125	Leaves, paper
	0230		Mostly fecal material
	0345		Mostly fecal material
	0430		Mostly fecal material
	0530		Mostly fecal material
13 Feb 70	0645	0.125	Mostly fecal material
	0745		Mostly fecal material, paper
	0845		Mostly fecal material, paper
	0945		Mostly fecal material, paper
	1045		Mostly fecal material
28 Feb 70	0835	1.0	Mostly fecal material, paper
	0935		Mostly fecal material, paper
	1035		Mostly fecal material, paper
	1130		Mostly paper
	1230		Mostly paper
4 Mar 70	1100	0.5	Paper, fecal material, leaves
	1200		Paper, fecal material, leaves
	1300		Fecal material, paper
	1400		Fecal material, paper
	1500		Fecal material, paper
13 Apr 70	1100	0.125	Brownish pulp appearance, cigarettes, little fecal material
	1200		Brownish pulp appearance, cigarettes, little fecal material
	1300		Brownish pulp appearance, cigarettes, little fecal material

Table 10 (continued)

QUALITATIVE DESCRIPTION OF COMBINED SEWAGE SCREENINGS

Date	Time of Immersion	Screen Size, in.	Description
13 Apr 70	1400	0.125	Pinkish-grey appearance, cigarettes, little fecal material
	1500		Light brown appearance, cigarettes, little fecal material
13 May 70	0430	0.25	Mostly paper
	0530		Mostly paper, some food matter
	0630		Mostly paper, some fecal material
	0730		Mostly paper, some fecal material
	0830		Mostly fecal material, some paper

Table 11

COMBINED SEWAGE CONSTITUENT REMOVAL EFFICIENCIES BY FIXED SCREENS

(%)

Date	Time at Immersion	Screen Size, in.	TS	TVS	BOD	COD	HEM	TC	FC	FS
4Apr69	2240	0.5	0.5	0.6	0.0	0.0	0.1	21.3	0.2	-
	2330	0.5	0.8	2.2	0.0	0.0	0.0	0.7	0.1	-
	2030	0.5	1.4	3.9	0.2	0.1	0.0	1.7	0.2	-
5Apr69	0130	0.5	4.2	10.8	0.2	0.1	0.0	0.1	0.4	-
5Nov69	0530	0.5	0.2	0.7	0.5	0.5	0.5	0.3	-	0.1
	0630	0.5	0.3	0.7	1.4	0.9	0.5	2.6	0.4	4.6
	0730	0.5	0.5	1.1	1.9	1.1	2.4	1.7	0.3	2.7
	0830	0.5	0.9	1.6	1.5	2.2	4.5	159.7	-	4.1
19Dec69	1115	0.25	0.4	0.6	2.8	1.1	0.5	0.3	0.4	12.2
	1215	0.25	0.8	1.4	7.0	7.9	3.3	0.3	1.0	40.6
	1315	0.25	0.5	1.0	3.8	5.3	2.8	25.0	50.5	126.3
	1415	0.25	1.0	2.0	10.9	4.8	1.1	133.0	25.0	-
21Dec69	1000	0.25	0.6	0.8	0.5	2.2	3.3	6.2	0.8	-
	1100	0.25	1.3	2.0	2.5	6.8	11.4	2.6	0.5	-
	1200	0.25	1.4	2.4	5.0	8.9	13.0	43.1	4.6	-
	1340	0.25	0.8	1.7	1.6	5.3	1.4	103.1	-	-

Table 11 (continued)

COMBINED SEWAGE CONSTITUENT REMOVAL EFFICIENCIES BY FIXED SCREENS

(%)

Date	Time at Immersion	Screen Size, in.	TS	TVS	BOD	COD	HEM	TC	FC	FS
13Jan70	1730	1.0	0.3	0.6	-	2.2	0.9	1.5	16.9	140.9
	1830	1.0	1.1	1.5	-	11.0	0.9	8.1	34.8	130.3
	1930	1.0	0.3	0.4	1.9	1.6	0.4	8.4	5.4	90.4
	2130	1.0	1.0	1.9	4.6	3.7	1.3	5.4	1.7	-
20Jan70	1658	1.0	0.9	1.8	2.0	0.9	0.5	90.2	-	0.5
	1755	1.0	0.2	0.7	1.0	0.8	0.0	8.1	2.5	4.8
	1900	1.0	0.5	1.0	0.9	1.3	0.6	45.3	7.3	14.6
	2000	1.0	3.1	5.0	7.9	4.3	3.7	-	-	79.7
27Jan70	0158	0.125	0.8	1.3	-	2.9	1.0	9.3	-	0.0
	0314	0.125	0.9	1.4	-	1.5	0.9	2.3	-	0.0
	0400	0.125	1.7	2.8	12.5	15.6	3.4	2.0	-	0.0
	0500	0.125	4.3	8.0	12.3	4.0	2.2	3.0	-	0.0
13Feb70	0710	0.125	2.2	2.9	4.8	4.3	0.4	2.9	-	0.4
	0815	0.125	8.1	10.9	5.6	11.1	12.5	242.0	-	-
	0915	0.125	1.9	2.8	-	1.2	2.0	-	-	0.5
	1015	0.125	1.4	2.9	0.6	3.2	1.5	-	-	2.2

Table 11 (continued)

COMBINED SEWAGE CONSTITUENT REMOVAL EFFICIENCIES BY FIXED SCREENS

(%)

Date	Time at Immersion	Screen Size, in.	TS	TVS	BOD	COD	HEM	TC	FC	FS
28Feb70	0900	1.0	2.4	3.9	4.7	2.0	7.3	7.9	13.1	-
	1000	1.0	2.0	3.8	1.8	1.5	3.3	44.8	10.5	-
	1100	1.0	1.4	2.9	3.3	2.4	-	120.8	477.8	-
	1200	1.0	0.6	1.3	1.3	1.2	-	11.5	24.0	5.1
4Mar70	1130	0.5	3.9	11.6	17.2	13.9	4.0	-	22.6	6.4
	1230	0.5	0.4	0.9	0.3	0.1	0.2	-	0.3	0.2
	1330	0.5	0.2	0.4	0.1	0.4	0.2	-	4.3	2.2
	1430	0.5	0.1	0.2	0.1	0.2	0.1	-	-	0.4
13Apr70	1130	0.125	1.8	3.0	2.0	7.7	3.7	0.1	0.7	0.0
	1230	0.125	2.0	4.0	6.2	6.8	3.2	9.5	154.2	23.2
	1330	0.125	1.5	3.0	3.1	3.7	2.6	10.2	0.7	0.6
	1430	0.125	1.3	2.6	2.1	5.2	2.4	0.7	0.3	0.8
13May70	0500	0.25	1.3	4.0	9.8	6.0	1.2	0.0	0.1	0.0
	0600	0.25	2.0	4.4	5.3	5.4	10.7	0.1	0.0	0.0
	0700	0.25	-	-	-	-	-	-	-	-
	0800	0.25	-	-	-	-	-	-	-	-
	Mean		1.4	2.7	3.9	3.8	2.7	10.3	6.5	16.7

from 0.0 to 12.5% for an overall average of 2.7%. The observed removals for all three bacterial forms were highly variable, indicating no removals in some instances and more than 100% in others. This irregularity is believed due primarily to the combined effects of the underestimation of bacterial densities in the bulk sample as a result of encapsulation in solids of organisms which do not develop in the analytical test media, and the growth and release of organisms from the collected screenings during sample collection, storage, preparation, and analysis. Reducing to 100% all observed bacterial removals that were greater than 100% provides overall average removals, irrespective of screen aperture size, of 10.3, 6.5, and 16.7%, respectively, for total coliforms, fecal coliforms, and fecal streptococci.

Average removals of combined sewage constituents by fixed screening devices as a function of screen aperture size are shown in Figure 17. Maximum average removals of biochemical oxygen demand, total solids, and total volatile solids resulted with the 0.125-in. screen, and were, respectively, 5.4, 2.3, and 3.8%. The larger 0.25-in. screen provided the maximum average chemical oxygen demand and hexane extractable material removals of 5.4 and 4.8% respectively. Only the average total volatile solids removal was least with the 1.0-in. screen, which was the largest screen aperture used, with intermediate sizes effecting minimum removals of the remaining physical and chemical constituents. Average bacterial removals were consistently lowest with the smallest screen aperture used and greatest with the largest screen aperture. This apparent anomoly is not explained.

For the physical and chemical constituents, the 1.0-in. screen effected removals that ranged from 48 to 60% of those obtained with the 0.125-in. screen. Apparently screens with relatively large openings are capable of removing a majority of the pollutants contained in combined sewage that are amenable to reduction by screening devices.

CHLORINATION PRACTICES

Four combined sewage bulk samples were collected from the Jackson Street manhole for use in laboratory studies to determine the effect of solids removal by screens on chlorination practices. The first three samples were collected during the normal sampling episode of 4 March 1970, and the fourth sample was taken between 0900 and 1100 hours on 14 April 1970.

Chlorine demands of screened and unscreened combined sewage samples are shown in Figure 18. The break-point of chlorination was determined on one sample and occurred at a chlorine dosage of about 30 mg/l.

Prebreak-point chlorination of all samples, results of which are shown in the lower half of Figure 18, demonstrated the effect of solids on chlorine requirements. The 15-minute chlorine residuals of Samples

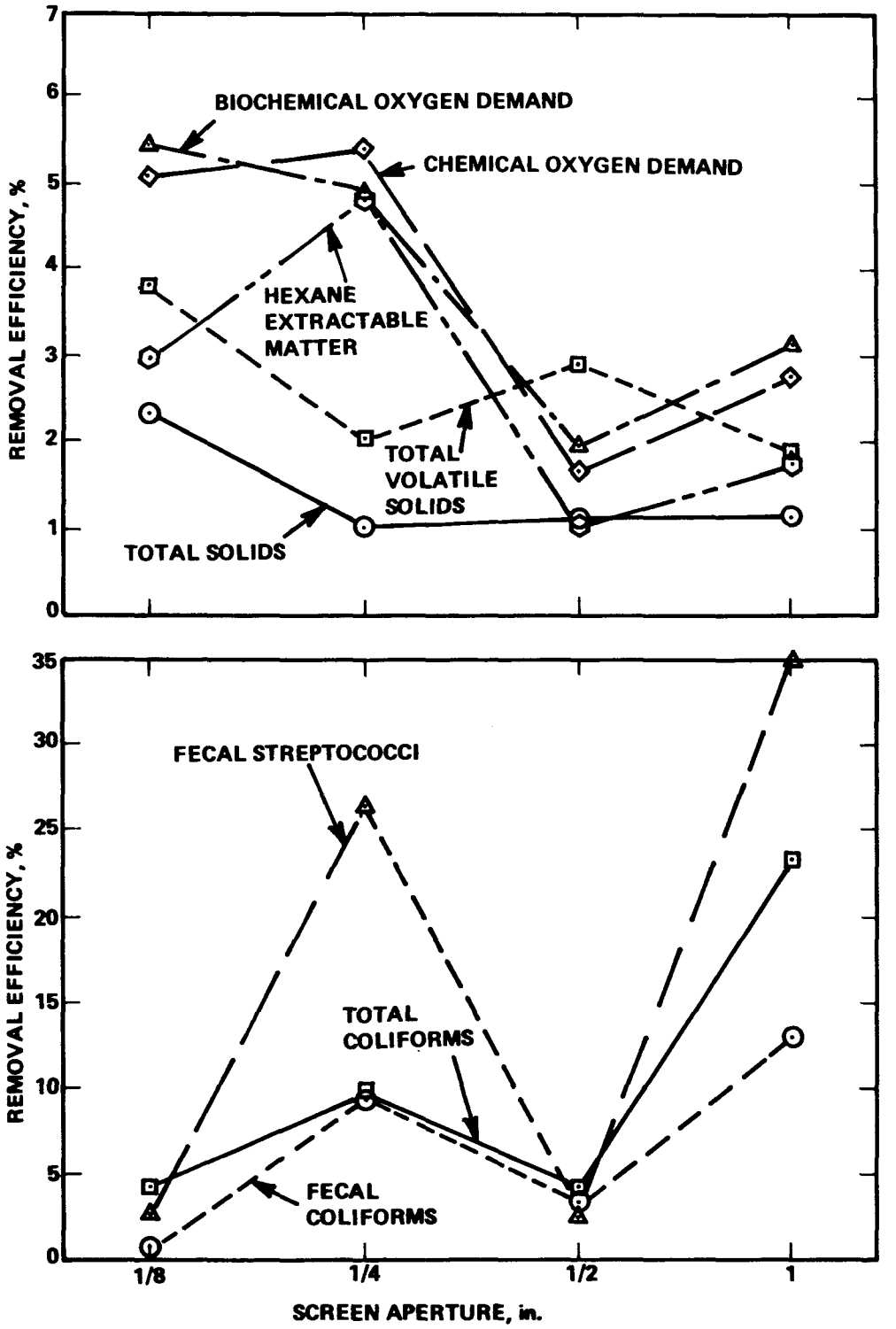

Figure 17. EFFECT OF SCREEN APERTURE SIZE ON COMBINED SEWAGE CONSTITUENT AVERAGE REMOVALS

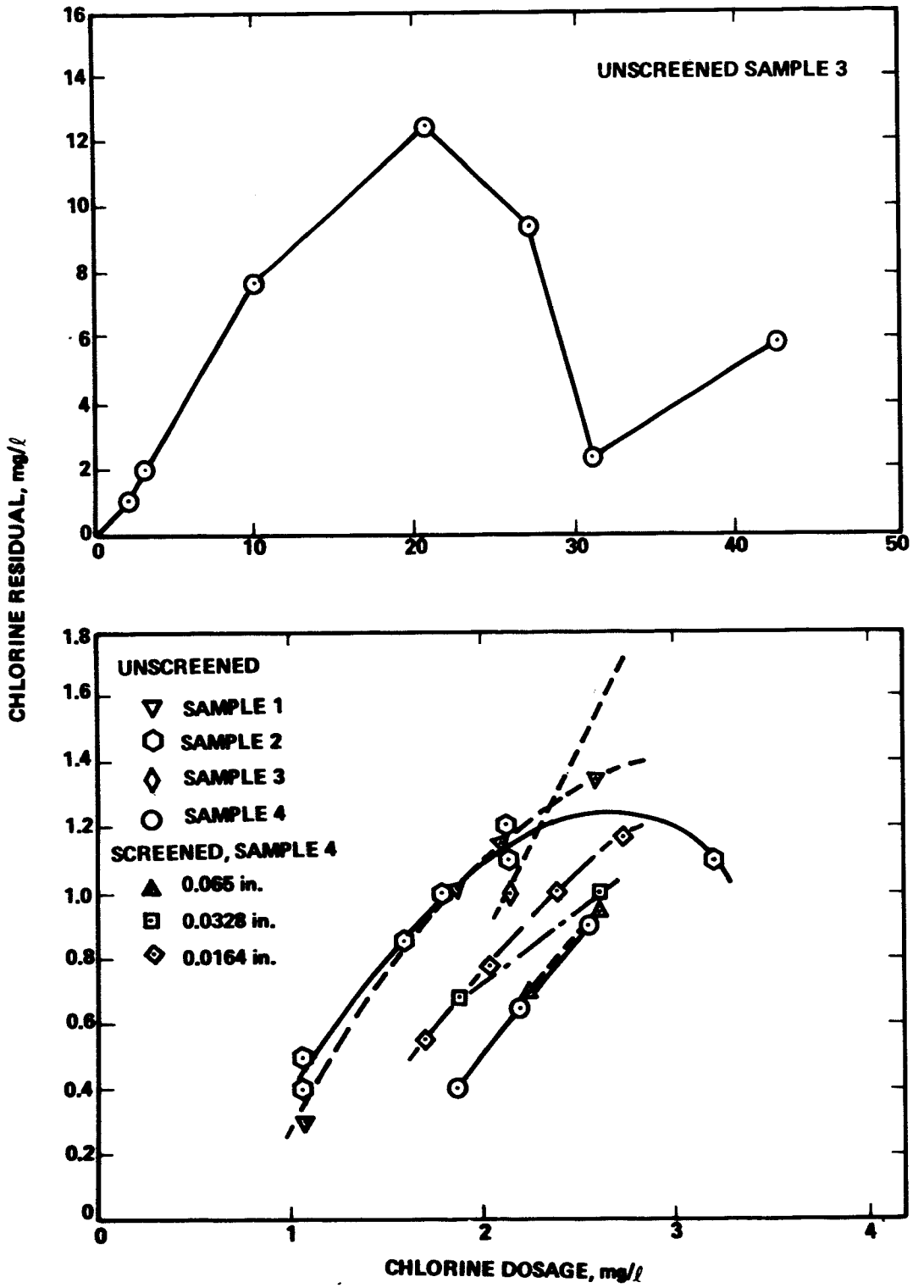

Figure 18. CHLORINE DEMAND OF SCREENED AND UNSCREENED COMBINED SEWAGE SAMPLES

1, 2, and 3 are much higher than the chlorine residual of Sample 4 at the same chlorine dosage due to the marked differences in total suspended solids concentrations. The first three samples contained on the average about 35 mg/l of total suspended solids, whereas the fourth sample had a total suspended solids concentration of 89 mg/l. At a chlorine dosage of 2.0 mg/l, Sample 4 had a chlorine residual of 0.5 mg/l after 15 minutes and Samples 1, 2, and 3 had about 1.1 mg/l. The chlorine residual at a fixed chlorine dosage for Sample 4 increased 50% following passage through a screen with 0.0164-in. aperture. A 0.0328-in. screen effected a somewhat smaller increase, and a 0.065-in. screen caused no increase in chlorine residual over the unscreened Sample 4. For a fixed chlorine residual of 1.0 mg/l after 15 minutes, the required chlorine dosage of Sample 4 decreased with decreasing screen aperture size, as shown in Figure 19. A reduction in chlorine dosage of only 11%, however, was observed following passage through all the screens, including the small 0.0164-in. screen.

The solids content of the combined sewage samples after serial processing through the series of screen sizes is presented in Figure 20. The data are irregular, but in general overall settleable solids concentrations were decreased, ranging from 20 to 80% upon final passage through the 0.0328-in. screen. Suspended solids content of the one sample decreased only 2% upon passage through the last, 0.0164-in. screen and actually increased upon passage through the 0.065- and 0.0328-in. screens! The number of samples available for analysis are too few for meaningful evaluation of the suspended solids content of screened combined sewage samples.

Bacterial counts of combined sewage following serial passage through screens of decreasing aperture size prior and subsequent to chlorination at a dosage providing a 15-minute chlorine residual of 1.0 mg/l are shown in Figure 21. (Arrows denote the direction of possible density for those determinations that were indefinite.) For Sample 1, general decreases in both total and fecal coliform densities occurred as screen aperture size was decreased. With the exception of isolated points, this general decrease in bacterial densities prior to chlorination was not observed to occur for any of the other combined sewage samples.

Post chlorination bacterial densities were for the most part indeterminate in Sample 1. In Sample 2, bacterial densities of the various screened portions were variable but demonstrated some decrease (more than one order of magnitude for total coliforms) following passage through the smallest, 0.0164-in. screen. Samples 3 and 4 demonstrated on the contrary that bacterial densities were little effected or increased as screen sizes became smaller. In Sample 3 the fecal coliform concentration increased one order of magnitude following serial passage through all screens, and in Sample 4 the total coliform concentrations likewise increased an order of magnitude.

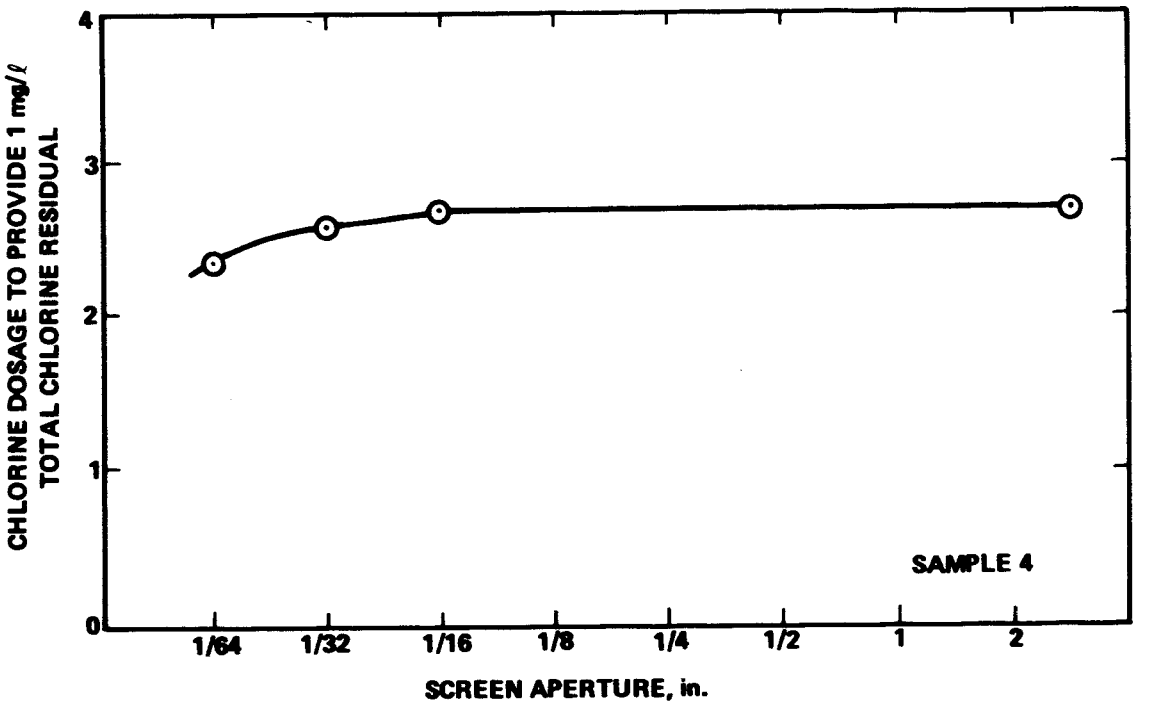

Figure 19. EFFECT OF SCREEN APERTURE SIZE ON CHLORINE DOSAGE OF COMBINED SEWAGE

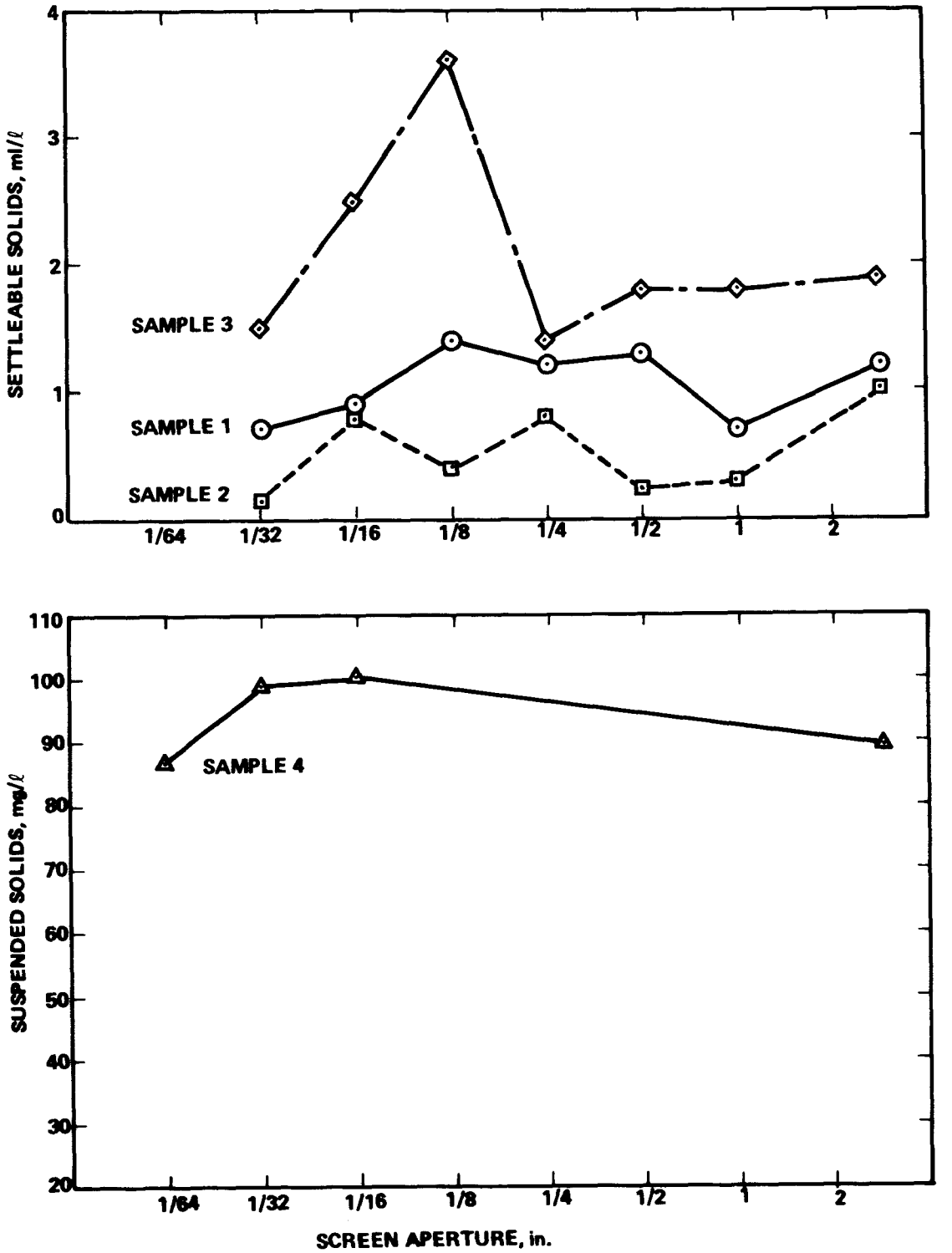

Figure 20. SOLIDS CONTENT OF SCREENED COMBINED SEWAGE SAMPLES

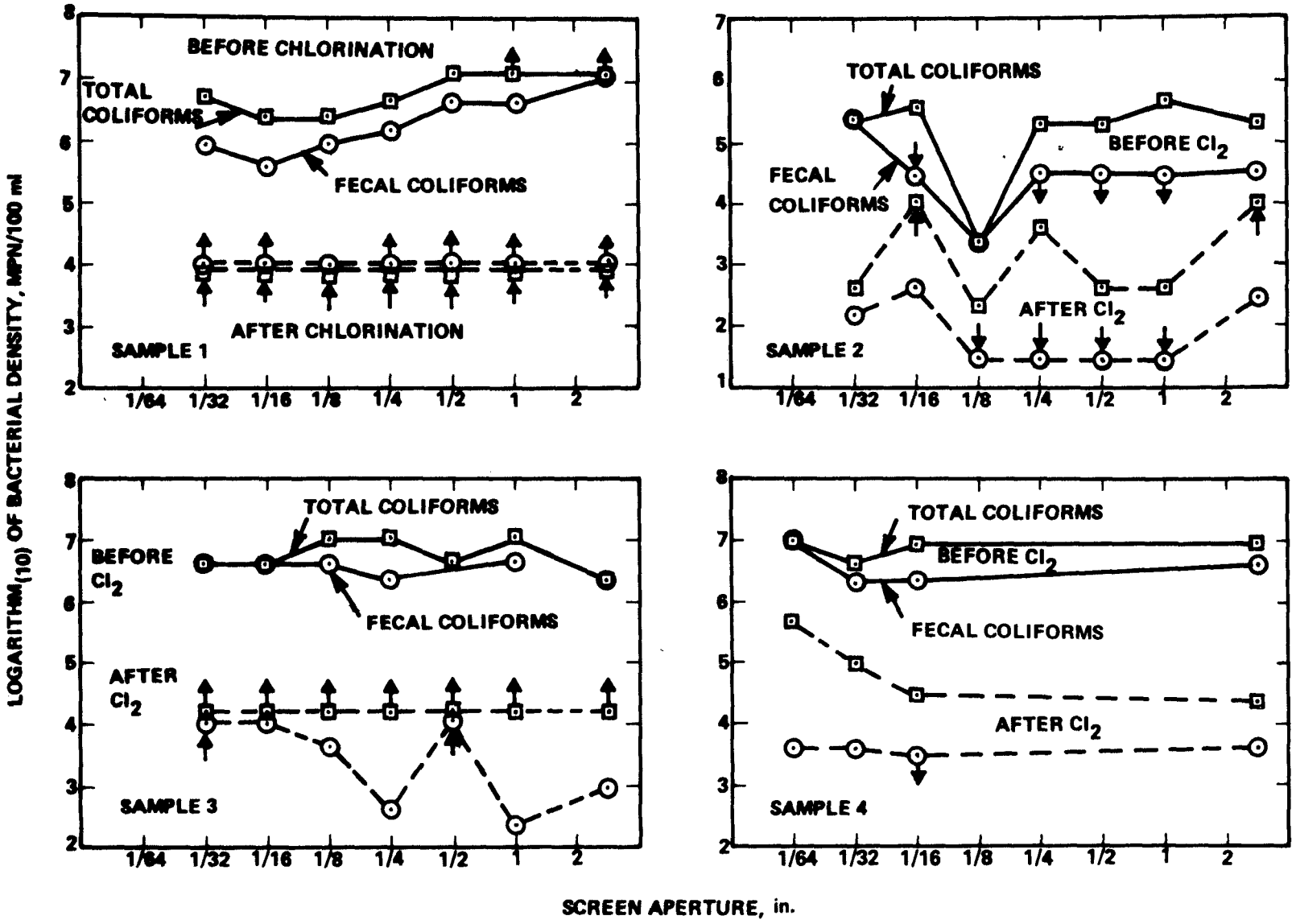

Figure 21. BACTERIAL DENSITIES OF SCREENED COMBINED SEWAGE SAMPLES BEFORE AND AFTER CHLORINATION

The absence of any generally consistent trend in bacterial densities as a consequence of screening of combined sewage suggests that screens of the size considered in this study have little, if any, effect on bacterial concentrations, *per se*, either associated with or without chlorination.

Section VII

APPLICATION OF SCREENING DEVICES

Combined sewage by nature is highly variable in both quantity and quality, and thus presents an extremely difficult material to control. During periods of rainfall, snow melt, and infiltration when the sewered flow increases to a point where it can no longer be hydraulically accommodated at the sewage treatment plant, the combined sewage is discharged untreated at bypass structures to receiving waters or open drains.

A national survey (Ref. 2) has concluded that combined sewer overflows contribute a significant portion to the nation's water pollution problem. It was estimated that about one-fifth of the country's population is served by combined sewers, of which more than three-quarters (of those inventoried) reported overflow occurrence. Also about three-quarters of all overflow sources surveyed was from combined sewers.

A number of methods for the abatement of pollution from combined sewer overflows have been proposed and many are being evaluated and demonstrated. "Total" solutions are available that eliminate combined sewer overflows, by separation of sanitary and storm water flows or by in-line or off-line storage and subsequent treatment of total flow in conventional sewage treatment facilities, but all are quite costly to implement and maintain. Another approach is the treatment of combined sewer overflows at their point of discharge, which suggests the use of high-rate treatment systems that are capable of processing highly variable flow rates and compositions. An extension of this latter scheme is the placement of devices in combined sewers upstream of the overflow bypass to retain certain pollutants in the sewer system during overflow occurrences and to release them back to the sewage subsequent to cessation of the overflow condition.

Of the many types of pollutants contained in combined sewage, particulate matter and especially the floatable and settleable fractions contribute to conditions which can quickly manifest themselves upon discharge to receiving waters by their obvious presence. Moreover, other immediate and potential degradation of receiving waters can occur from these solids so that their separation from combined sewer overflows could greatly reduce the deleterious effects of combined sewer discharges on receiving waters.

Mechanical means of solids removal, such as fixed or moving screens, would appear to possess the desirable characteristic for this application of the acceptance of wide variations in hydraulic loading with relatively little effect on performance compared to systems dependent upon

biological actions, gravity separation, or porous media filtration. In addition, high solids removal efficiencies can be obtained from mechanical screening devices. They are well suited to modular or staged operation and are immediately operable.

Similar reductions in combined sewer overflow pollution could be effected either by screening stations at the points of combined sewer overflows or by the placement of screening devices in the combined sewers upstream of the overflow bypass. The two systems, however, differ greatly in their operation and must be carefully evaluated with regard to their comparative utility. The in-sewer devices would require no additional space for their implementation other than that already allocated to the conveyance of combined sewage, since they would be inserted into manhole sections. Also the choice of locating the in-sewer devices to best control and retain the solids in the system should be almost limitless. The greater number of devices required for in-sewer placement, however, as compared to combined sewer bypass placement, requires careful assessment of the capital and particularly maintenance costs associated with this method of pollution control. Total costs of the in-sewer screens would be greatly dependent upon the character and design of the device, but it is evident that it must be capable of nearly maintenance-free operation. Frequent, periodic inspection and routine maintenance of several larger screening stations located at overflow points would certainly be more convenient and economical. Development and demonstration of satisfactory in-sewer screening devices must be performed before serious consideration can be given this method of solids removal from combined sewer overflows.

The maintenance of acceptably high hydraulic loading rates without incurring impractical pressure drops requires that screen apertures be sufficiently large, which limits the minimum sized particle that can be physically retained by the screen. For the placement of fixed screens in sewers, where tolerable hydraulic head losses are usually quite small, the screen aperture may be only small enough to retain street litter, paper and paper goods, leaves, and fecal matter. These larger solids, however, upon discharge to receiving waters tend to agglomerate into larger, more evident and objectionable, concentrations of water pollution. If the aesthetic quality of receiving waters is to be preserved, these large screenable solids must be remove from combined sewage discharges.

The extent to which screenable solids discharged with combined sewer overflows will produce deleterious effects will depend in large part upon the nature of the receiving waters. The most serious condition in this respect occurs where the solids have the greatest opportunity to become and remain aggregated, such as would occur in lakes and tidal estuaries of low flushing characteristics. Lesser opportunity for agglomeration exists in flowing streams and rivers and in exposed embayments and coastal waters; and therefore the degradation of these

receiving waters caused by release of screenable solids is much less evident and significant.

Although the potential deleterious effects of deoxygenation, eutrophication, and pathogenic inoculation of receiving waters caused by screenable solids should not be overlooked, the primary function of removing these solids is the protection and preservation of the esthetic quality of the environment. Thus those uses of receiving waters that benefit most from the control of screenable solids are those subject to public use and view, namely, recreation and scenic viewing. Of half of the estimated jurisdictional areas served by combined sewers in the nation that were surveyed (Ref. 2), 11.9% reported combined sewer overflows into receiving waters used for body contact recreation, 16.2% indicated overflows to limited body contact recreational waters, and 15.8% reported overflows to receiving waters whose highest use is fishing. The same survey also indicated that an additional 20.6% of the overflows are discharged to open drains which normally are dry and thus are susceptable to intermittent, prolonged exposure of deposited solids.

With respect to land use in the immediate vicinity of combined sewage overflows it was found (Ref. 2) that 13.9% of the overflows occurred in recreational areas and 30.4% in residential areas.

A major portion of the nation's receiving waters therefore would appear to be immediately affected and degraded by the discharge of materials that are amenable to removal from combined sewage overflows by screening devices.

The reduction of pollutants, which exert an early demand on the oxygen resources of the receiving waters as measured by biochemical oxygen demand and chemical oxygen demand, by fixed screening devices was found in this program to be small ($\sim 5\%$); and although any reduction is certainly of benefit, the improvements produced by this treatment are marginal and most probably could not be easily measured in the receiving waters. Also negligible reductions in bacterial densities and chlorine requirements were observed with screens having aperture sizes that are considered practical for insertion into sewers. Thus for conditions requiring reduction either in substances that exert an early oxygen demand or in bacterial quantities, there appears to be no benefit from the placement of a fixed screen into a combined sewer. Reductions effected in these pollutants by moving screening devices are of course another matter and are not quantitatively considered herein.

Section VIII

ACKNOWLEDGMENTS

The program was performed during the 1968-1969 and 1969-1970 wet-weather seasons by the Envirogenics Company, a Division of Aerojet-General Corporation, at El Monte, California, under the direction of Messrs. John C. Merrell, Jr., Project Officer, and Darwin R. Wright, Federal Water Quality Administration. Aerojet-General personnel participating in the program were Dr. D. L. Feuerstein, Program Manager; Mr. Alfred Grimm, Project Engineer; Mr. T. A. Bursztynsky, Engineer; Messrs. R. C. Hanson and B. H. Putt, Analysts; and Mrs. M. D. Robinson, Secretary.

The field sampling, monitoring, and laboratory analysis for this program were contracted with and performed by Engineering-Science, Incorporated, Oakland, California under the supervision of Drs. W. G. Gates and T. G. Shea.

The cooperation of the City and County of San Francisco in allowing the sampling station manhole modifications for the tests is gratefully appreciated and acknowledged.

Section IX

REFERENCES

1. Dixon, W. J. and F. J. Massey, Jr. Introduction to Statistical Analysis. 2nd ed. New York: McGraw-Hill Book Co., Inc., 1957.

2. Problems of Combined Sewer Facilities and Overflows, 1967. (WP-20-11), Washington: Federal Water Pollution Control Administration, 1 December 1967.

Section X

APPENDICES

Appendix		Page
A.	Drawings of Bulk Sampler	70
B.	Drawings of Screenings Sampler	91
C.	Local Climatological Data	96
D.	Rainfall Intensity-Duration-Frequency Relationships, San Francisco, California	113
E.	Characteristics of Combined Sewage Bulk	114
F.	Characteristics of Combined Sewage Screenings	126
G.	Correlations between Combined Sewage Bulk Constituents, 10 Storms	138
H.	Correlations between Combined Sewage Particle Size and Bulk Constituents, 10 Storms	142
I.	Correlations between Combined Sewage Screenings Constituents, 10 Storms	143

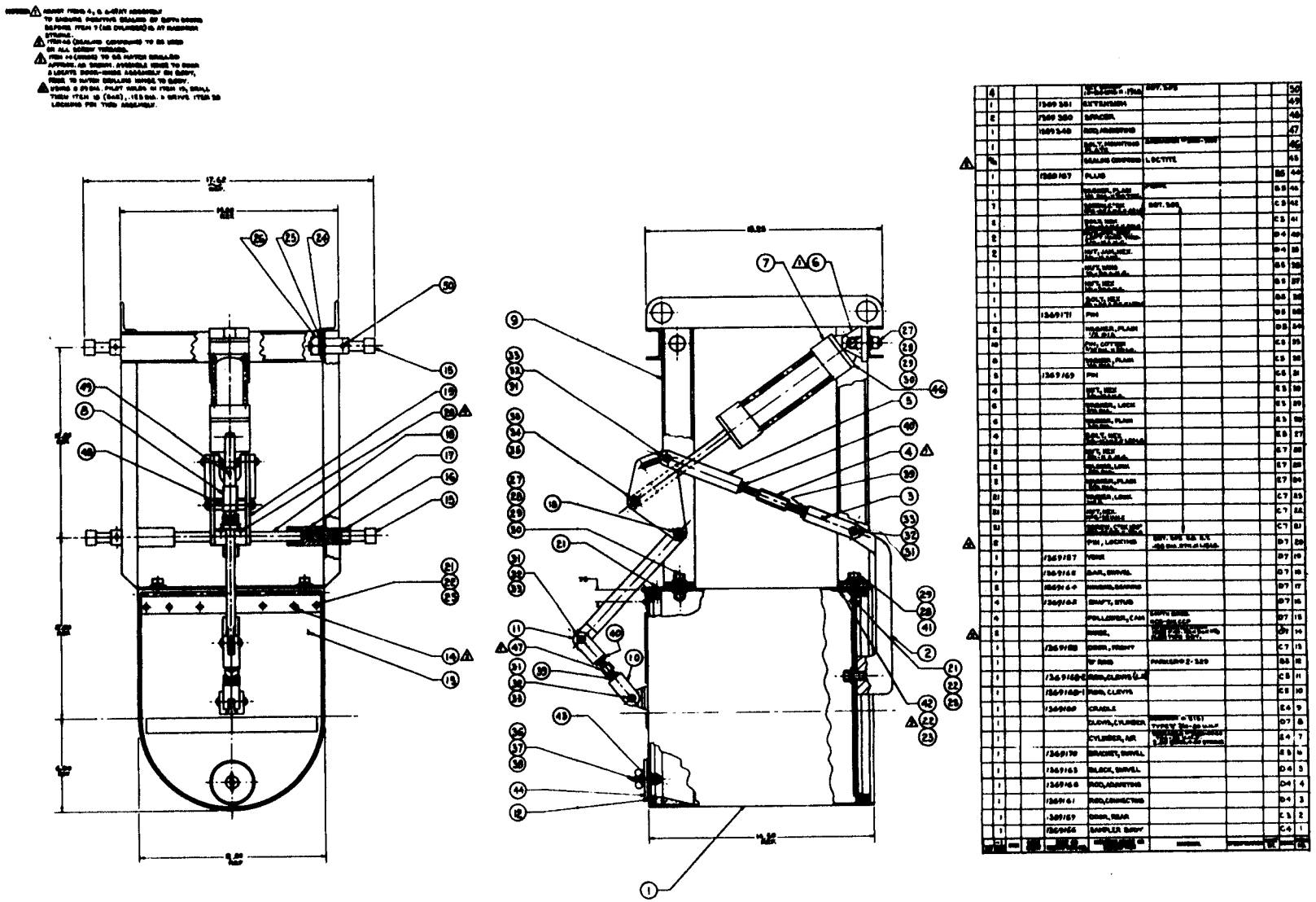

Appendix A. BULK SAMPLER ASSEMBLY

NOTES: 1. REMOVE ALL BURRS & SHARP EDGES EQUIVALENT TO .01R MAX. UNLESS OTHERWISE NOTED.
2. HELI-COIL INSERTS TO FINISH FLUSH.
3. ITEM 7 TO BE EPOXIED IN POSITION AFTER WELDING.

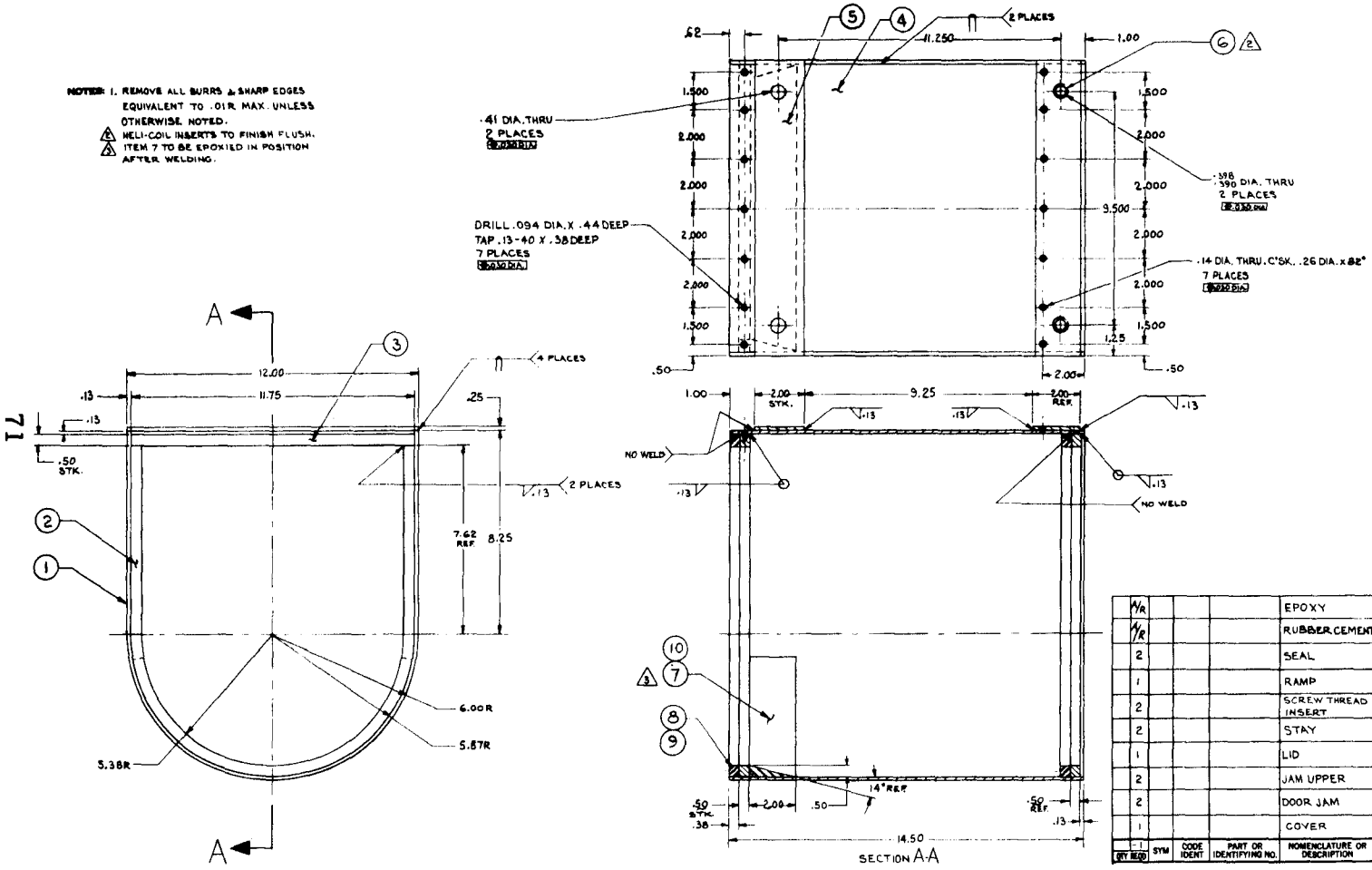

QTY REQD	SYM	CODE IDENT	PART OR IDENTIFYING NO.	NOMENCLATURE OR DESCRIPTION	MATERIAL	SPECIFICATION	UNIT WT.	ZONE	ITEM NO.
A/R				EPOXY	DUPONT				10
A/R				RUBBER CEMENT					9
2				SEAL	NEOPRENE, 3/8" x 1/2" x 4'				8
1				RAMP	TEFLON, BLACK DUPONT #[illegible] TYPE "A" [illegible] 18" LG.				7
2				SCREW THREAD INSERT	HELI-COIL #1188-6CN 0375	MS 21208 MS 21209			6
2				STAY	ALUM 6061-T6	QQ-A-250/11			5
1				LID	ALUM 6061-0	QQ-A-327b COND. A			4
2				JAM UPPER	ALUM 6061-T651	QQ-A-328b COND. T			3
2				DOOR JAM	ALUM 6061-T651	QQ-A-328b COND. T			2
1				COVER	ALUM. 6061-0	QQ-A-327b COND. A			1

Appendix A (Continued). SAMPLER BODY

NOTES: 1. REMOVE ALL BURRS & SHARP EDGES EQUIVALENT TO .015 MAX. UNLESS OTHERWISE NOTED

1 BEFORE DRILLING SEE NOTE 1 DRWG 1369155.
ASSEMBLE HINGE TO DOOR & MATCH DRILL (STAGGER HOLES TO MISS SIMILAR HOLES IN BODY 1369156)

1 ASSEMBLE DOOR IN P/N 1369156 (BODY) WITH LINKAGE BEFORE LOCATING FOR SCREW ITEM 7, (SEE ASSEMBLY DRWG. 1368165).

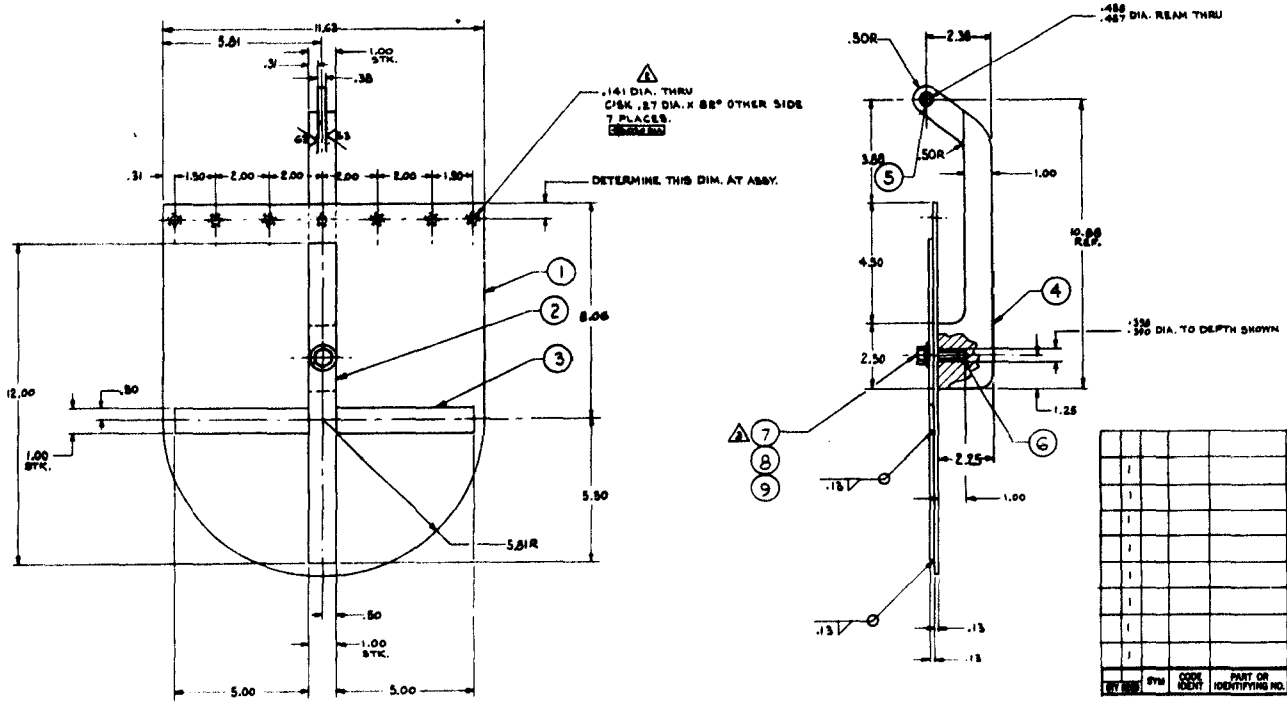

QTY REQ		SYM	CODE IDENT	PART OR IDENTIFYING NO.	NOMENCLATURE OR DESCRIPTION	MATERIAL	SPECIFICATION	UNIT WT.	ZONE	ITEM NO.
					WASHER, LOCK 3/8 DIA.					9
	1				WASHER, PLAIN 3/8 DIA.					8
	1				SCREW HEX. 3/8-16UNC x 1 1/4 LG.	SST. 301				7
	1				SCREW THREAD INSERT	HELI-COIL #1188-6CN 0375	MS21209 MS21209			6
	1				BUSH	BOST-BRONZE 7/16 X 1/2 X 3/8 B47-3				5
	1				PIVOT ARM	ALUM. 6061-T651	QQ-A-250/11 COND. T			4
	1				HORIZONTAL RIB	ALUM. 6061-T6	QQ-A-250/11 COND. T			3
	1				VERTICAL RIB	ALUM. 6061-T6	QQ-A-250/11 COND. T			2
	1				REAR DOOR	ALUM. 6061-O	QQ-A-250/6 COND. A			1

Appendix A (Continued). REAR DOOR

NOTES: 1. REMOVE ALL BURRS & SHARP EDGES EQUIVALENT TO .01R MAX, UNLESS OTHERWISE NOTED.

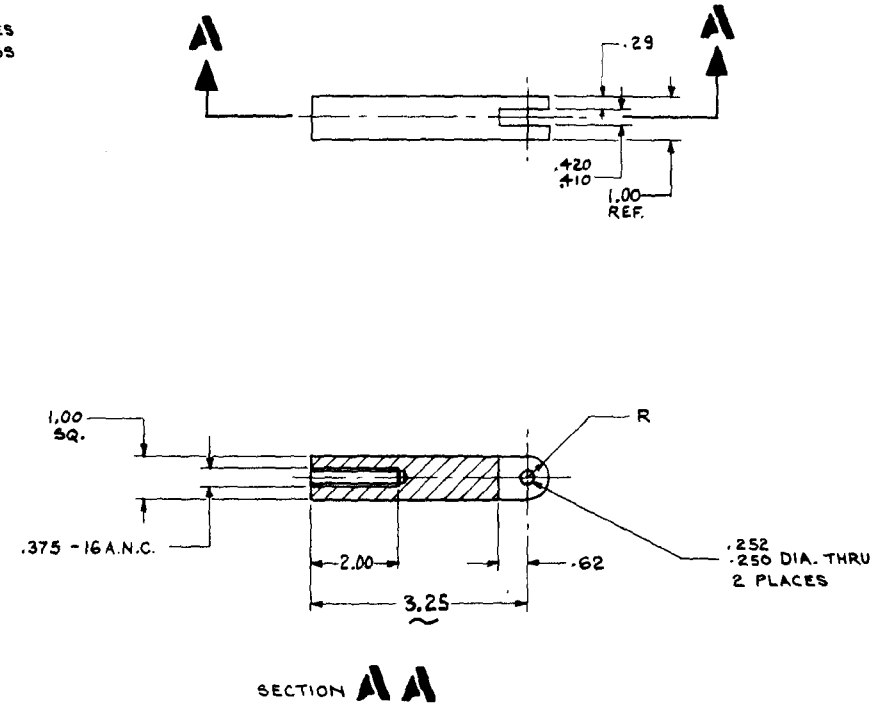

				-1		ALUM 6061-T6	QQ-A-270Z-1 COND.T			
QTY REQD		SYM	CODE IDENT	PART OR IDENTIFYING NO.	NOMENCLATURE OR DESCRIPTION	MATERIAL	SPECIFICATION	UNIT WT.	ZONE	ITEM NO.

Appendix A (Continued). CONNECTING ROD

NOTES: 1. REMOVE ALL BURRS & SHARP EDGES EQUIVALENT TO .01R MAX. UNLESS OTHERWISE NOTED.

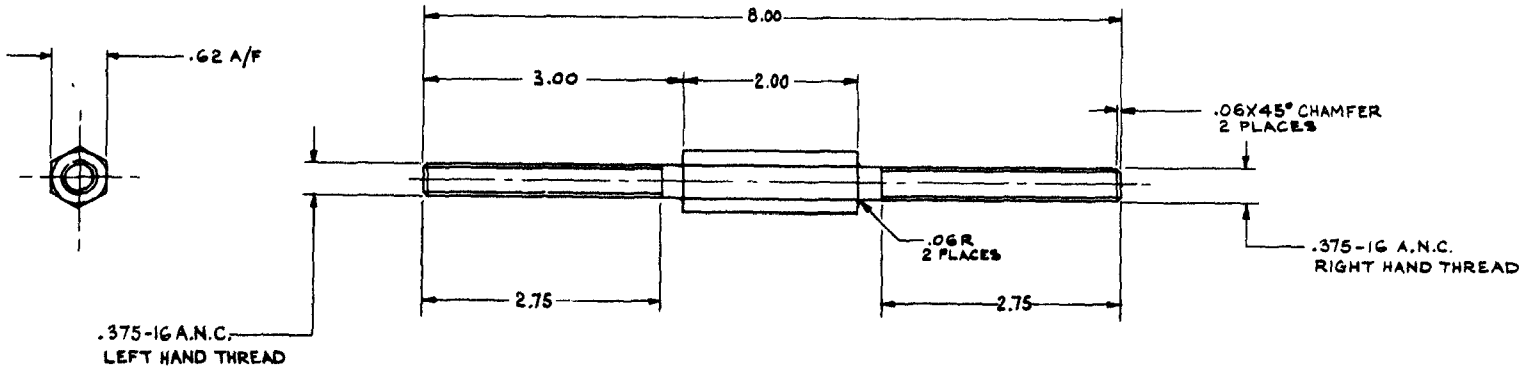

QTY REQD		SYM	CODE IDENT	PART OR IDENTIFYING NO.	NOMENCLATURE OR DESCRIPTION	MATERIAL	SPECIFICATION	UNIT WT.	ZONE	ITEM NO.
				-1		HEX. BAR SST. 303 C.D. H.T.	MIL-S-7720			

Appendix A (Continued). ADJUSTING ROD

NOTES: 1. REMOVE ALL BURRS & SHARP EDGES EQUIVALENT TO .01R MAX. UNLESS OTHERWISE NOTED.

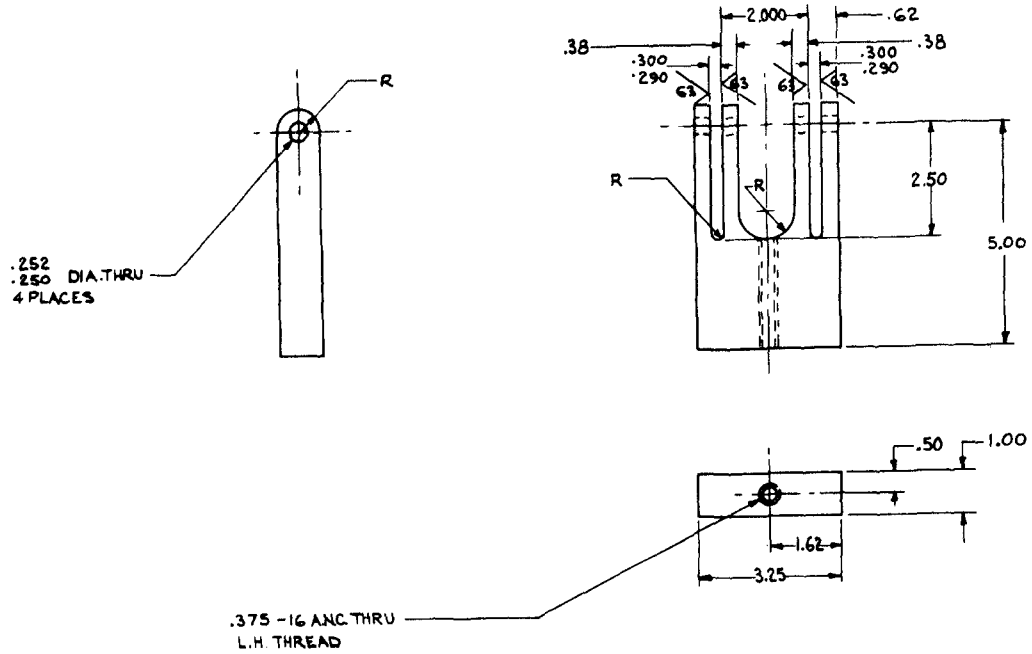

QTY REQD		SYM	CODE IDENT	PART OR IDENTIFYING NO.	NOMENCLATURE OR DESCRIPTION	MATERIAL	SPECIFICATION	UNIT WT.	ZONE	ITEM NO.
				-1		ALUM. 6061-T6	QQ-A-278-1 COND. T			

Appendix A (Continued). SWIVEL BLOCK

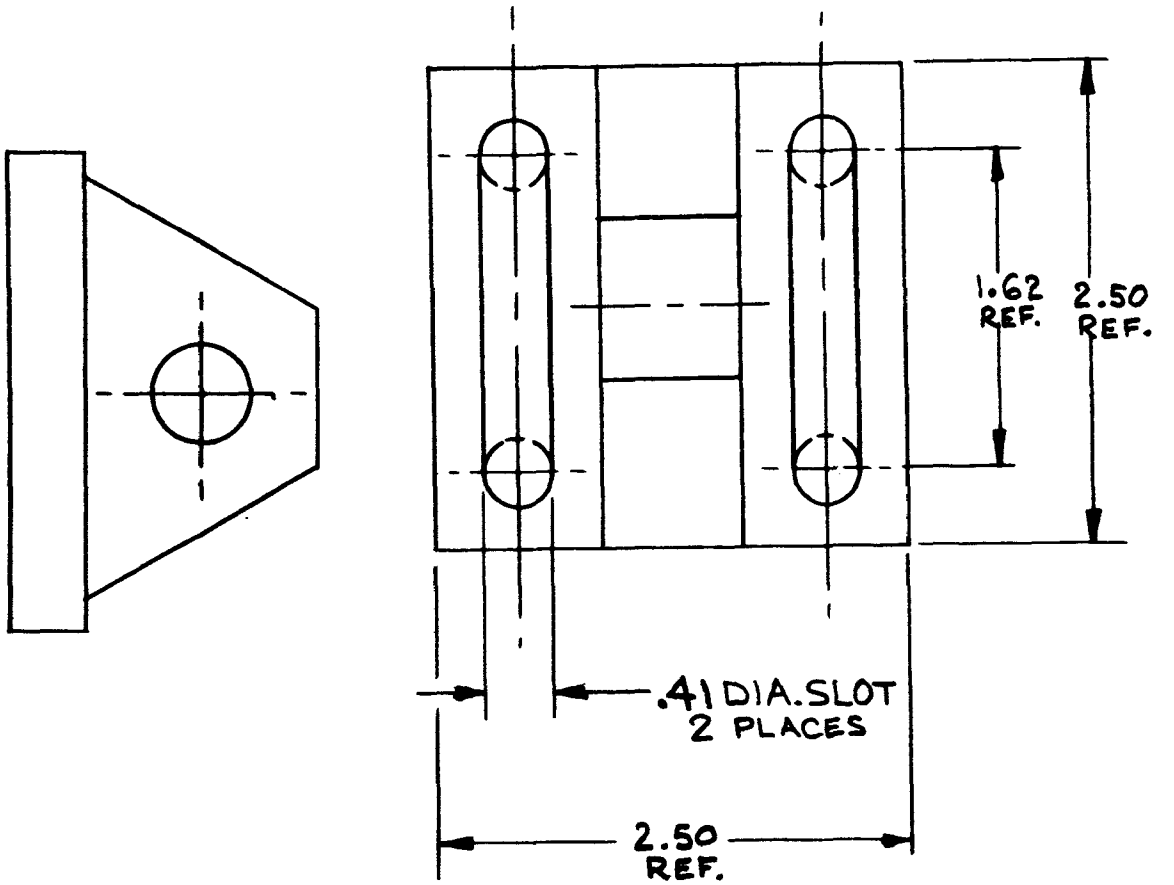

Appendix A (Continued). SWIVEL BRACKET

NOTES: 1. REMOVE ALL BURRS & SHARP EDGES EQUIVALENT TO .01R MAX. UNLESS OTHERWISE NOTED.
2. LOCATE TO P/N 1369156 BODY BEFORE SLOTTING.

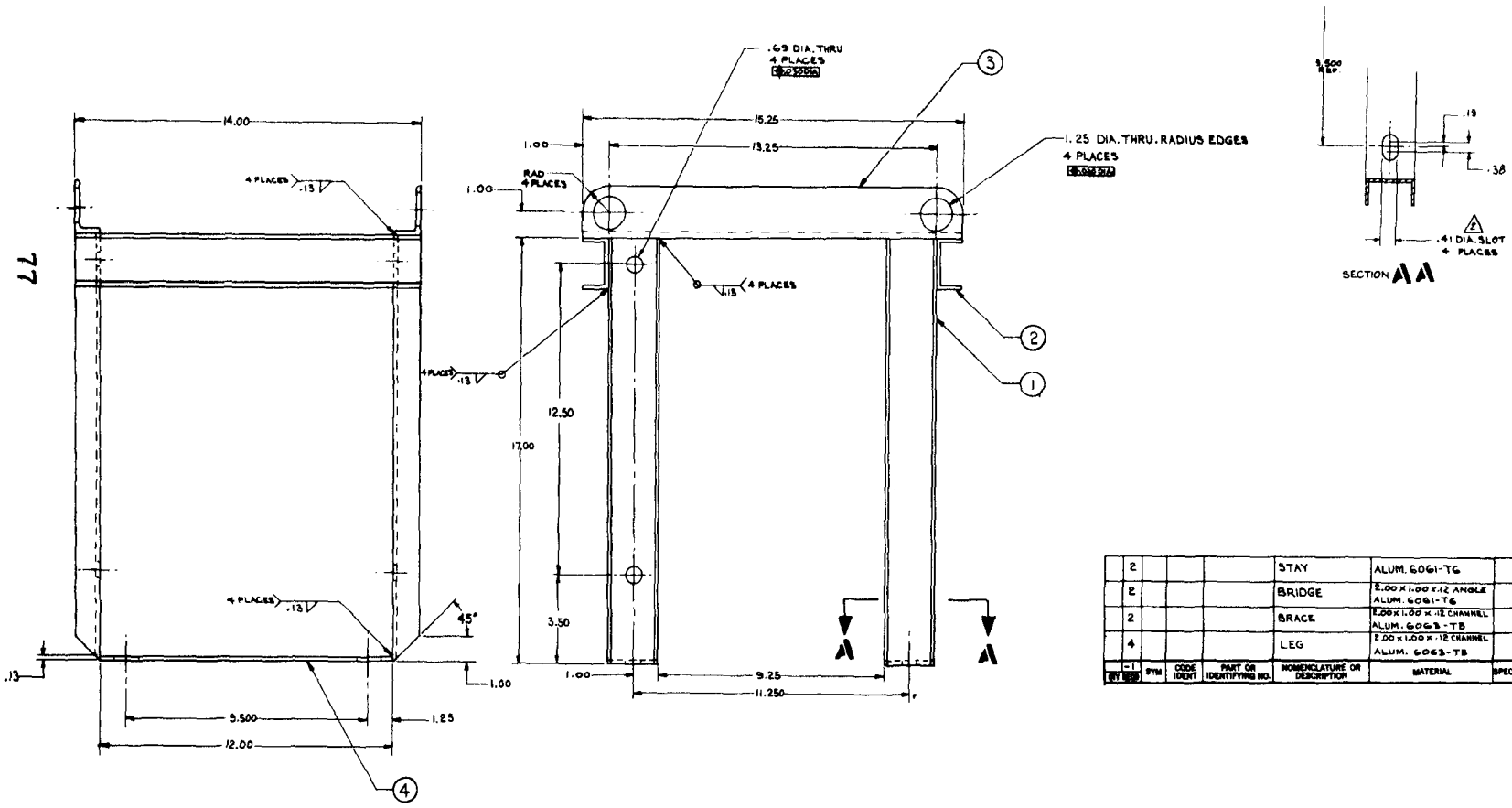

QTY REQD -1	QTY REQD -2	SYM	CODE IDENT	PART OR IDENTIFYING NO.	NOMENCLATURE OR DESCRIPTION	MATERIAL	SPECIFICATION	UNIT WT.	ZONE	ITEM NO.
	2				STAY	ALUM. 6061-T6				4
	2				BRIDGE	2.00 x 1.00 x .12 ANGLE ALUM. 6061-T6				3
	2				BRACE	2.00 x 1.00 x .12 CHANNEL ALUM. 6063-T5				2
	4				LEG	2.00 x 1.00 x .12 CHANNEL ALUM. 6063-T5				1

Appendix A (Continued). CRADLE

NOTES: 1. REMOVE ALL BURRS & SHARP EDGES EQUIVALENT TO .01R MAX. UNLESS OTHERWISE NOTED.

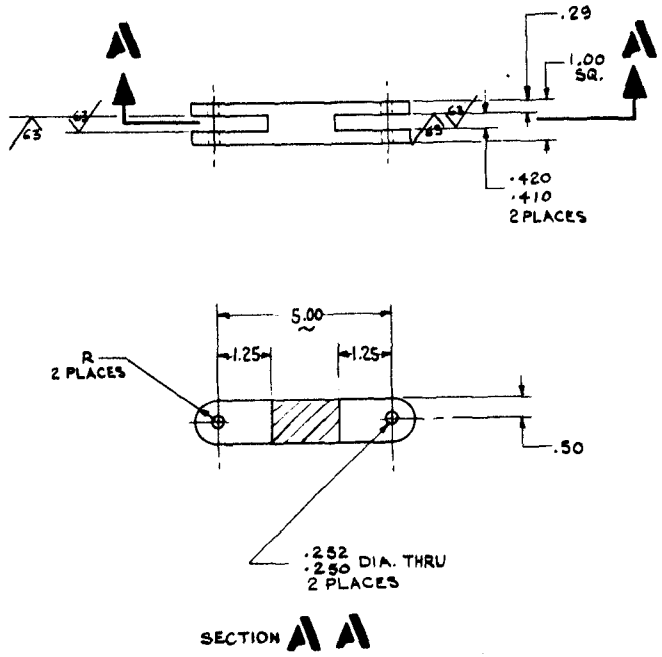

				-1		ALUM 6061-T6	QQ-A-270L-1 COND.T			
QTY REQD		SYM	CODE IDENT	PART OR IDENTIFYING NO.	NOMENCLATURE OR DESCRIPTION	MATERIAL	SPECIFICATION	UNIT WT.	ZONE	ITEM NO.

Appendix A (Continued). CLEVIS ROD

NOTES: 1. REMOVE BURRS & SHARP EDGES

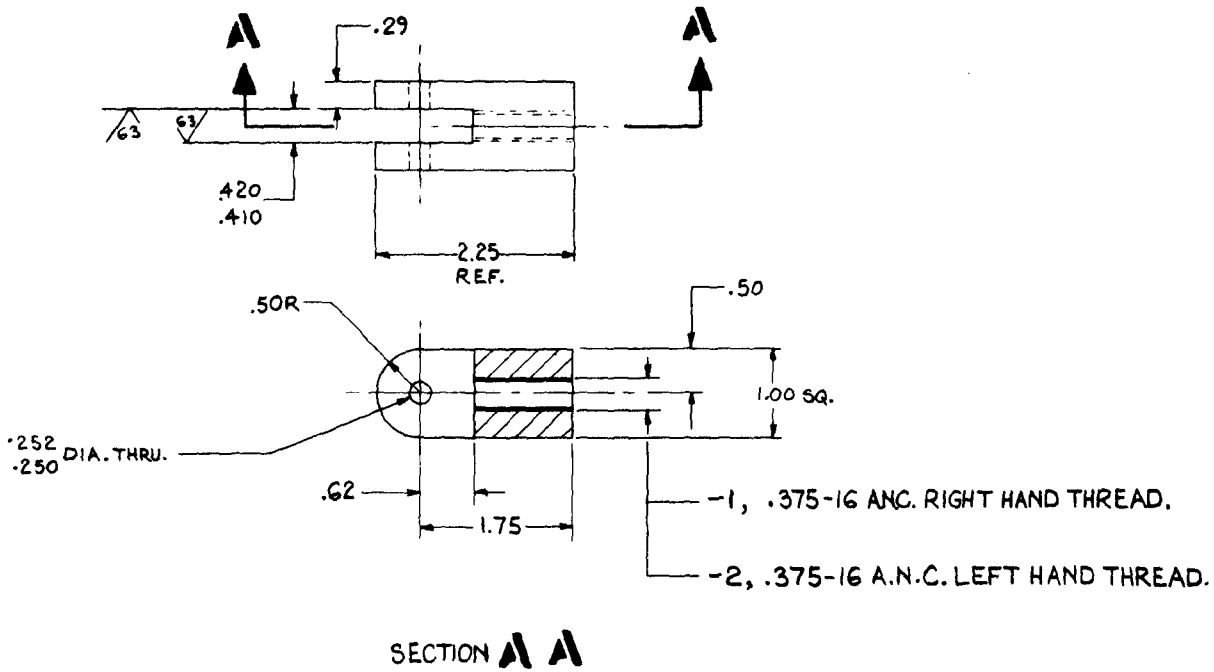

QTY REQD -1	QTY REQD	SYM	CODE IDENT	PART OR IDENTIFYING NO.	NOMENCLATURE OR DESCRIPTION	MATERIAL	SPECIFICATION	UNIT WT.	ZONE	ITEM NO.
	1			-2		ALUM. 6061-T6	QQ-A-270a-1 COND. T.			
	1			-1		ALUM. 6061-T6	QQ-A-270a-1 COND. T.			

Appendix A (Continued). CLEVIS ROD (L. H.)

NOTES: 1. REMOVE ALL BURRS & SHARP EDGES EQUIVALENT TO .01R MAX. UNLESS OTHERWISE NOTED.

2. LOCATE .28 HOLE IN CENTER OF 2.000 DIA. HOLE BEFORE WELDING ITEM 2 IN POSITION.

3. BEFORE DRILLING SEE NOTE 3 DRWG 1369155; (ASSEMBLE HINGE TO DOOR & MATCH DRILL).

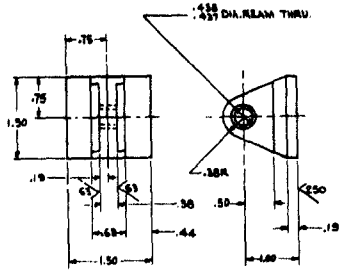

ENLARGED DETAIL OF ITEM 5, SCALE:-1-1

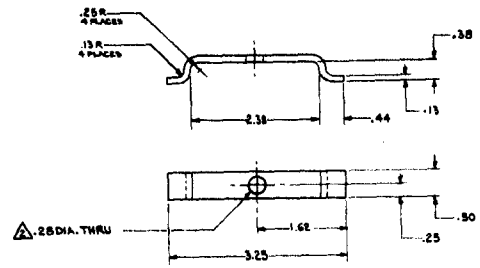

ENLARGED DETAIL OF ITEM 2, SCALE:-1-1

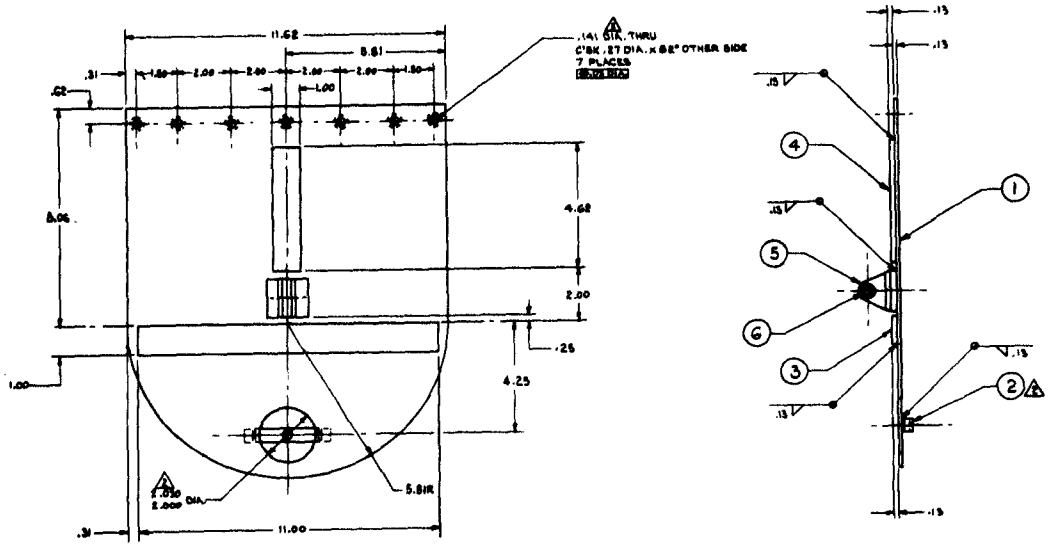

	1				BUSH	BOLT-BRONZE 7/16 x 5/8 x 1/8 x 1/8 Lg.				6
	1				PIVOT BLOCK	ALUM. 6061-T651	QQ-A-250/11 COND. T			5
	1				VERTICAL RIB	ALUM. 6061-T6	QQ-A-250/11 COND. T			4
	1				HORIZONTAL RIB	ALUM 6061-T6	QQ-A-250/11 COND. T			3
	1				PORT HOLE BAR	ALUM. 6061-T6	QQ-A-250/11			2
	1				FRONT DOOR	ALUM. 6061-0	QQ-A-325/9 COND. A			1
QTY REQ	-1	SYM	CODE IDENT	PART OR IDENTIFYING NO.	NOMENCLATURE OR DESCRIPTION	MATERIAL	SPECIFICATION	UNIT WT.	ZONE	ITEM NO.

Appendix A (Continued). FRONT DOOR

NOTES: 1. REMOVE ALL BURRS & SHARP EDGES EQUIVALENT TO .01R MAX. UNLESS OTHERWISE NOTED.

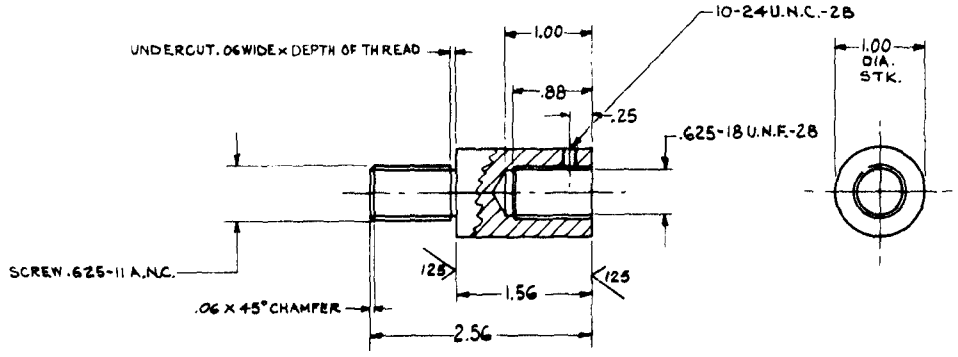

QTY REQD		SYM	CODE IDENT	PART OR IDENTIFYING NO.	NOMENCLATURE OR DESCRIPTION	MATERIAL	SPECIFICATION	UNIT WT.	ZONE	ITEM NO.
				-1		SST. 303 C.D. H.T.	MIL-S-7720			

Appendix A (Continued). SHAFT STUB

NOTES: 1. REMOVE ALL BURRS & SHARP EDGES EQUIVALENT TO .01R MAX. UNLESS OTHERWISE NOTED.

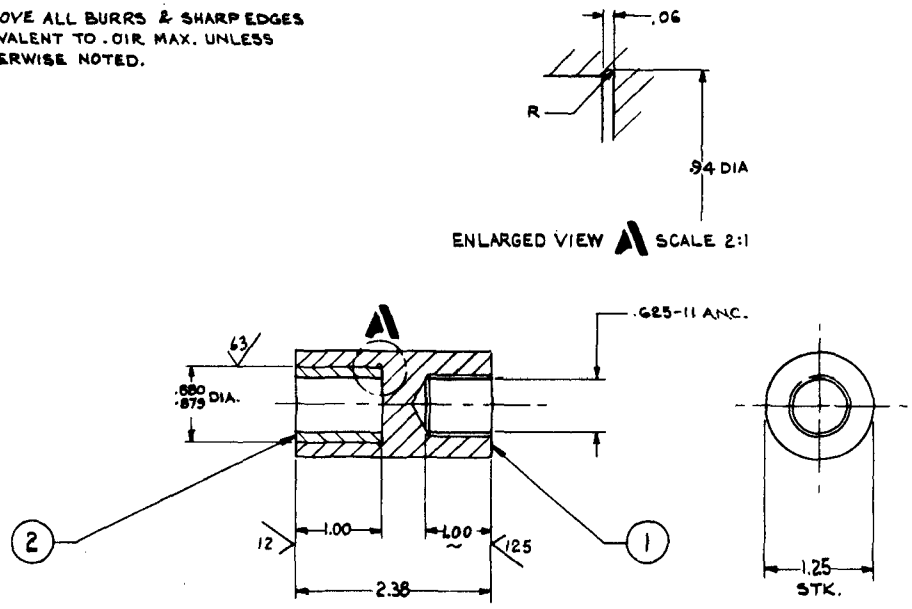

QTY REQD	- 1	SYM	CODE IDENT	PART OR IDENTIFYING NO.	NOMENCLATURE OR DESCRIPTION	MATERIAL	SPECIFICATION	UNIT WT.	ZONE	ITEM NO.
	1				BUSH	BOST-BRONZ 7/8 x 5/8 I.D. x 1 LG. B1014-B				2
	1				BEARING HOUSING	SST. 303 C.D. H.T.	MIL-S-7720			1

Appendix A (Continued). BEARING HOUSING

NOTES: 1. REMOVE ALL BURRS & SHARP EDGES EQUIVALENT TO .01R MAX UNLESS OTHERWISE NOTED.

2. COAT WITH TEFLON "S", DUPONT #939203, MAX. DEPTH .001

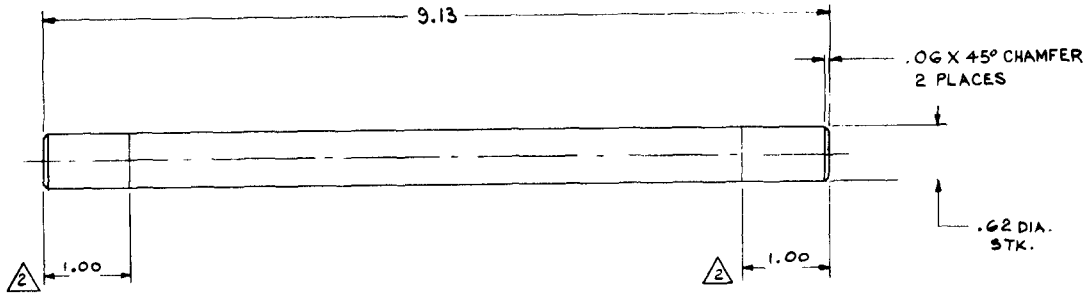

QTY REQD		SYM	CODE IDENT	PART OR IDENTIFYING NO.	NOMENCLATURE OR DESCRIPTION	MATERIAL	SPECIFICATION	UNIT WT.	ZONE	ITEM NO.
				-1		ALUM. 6061 (6IS-T6)	QQ-A-325b COND. T			

Appendix A (Continued). SWIVEL BAR

NOTES: 1. REMOVE ALL BURRS & SHARP EDGES EQUIVALENT TO .01R MAX. UNLESS OTHERWISE NOTED.
2. MACHINE ITEM 4 FLUSH WITH ITEM 2

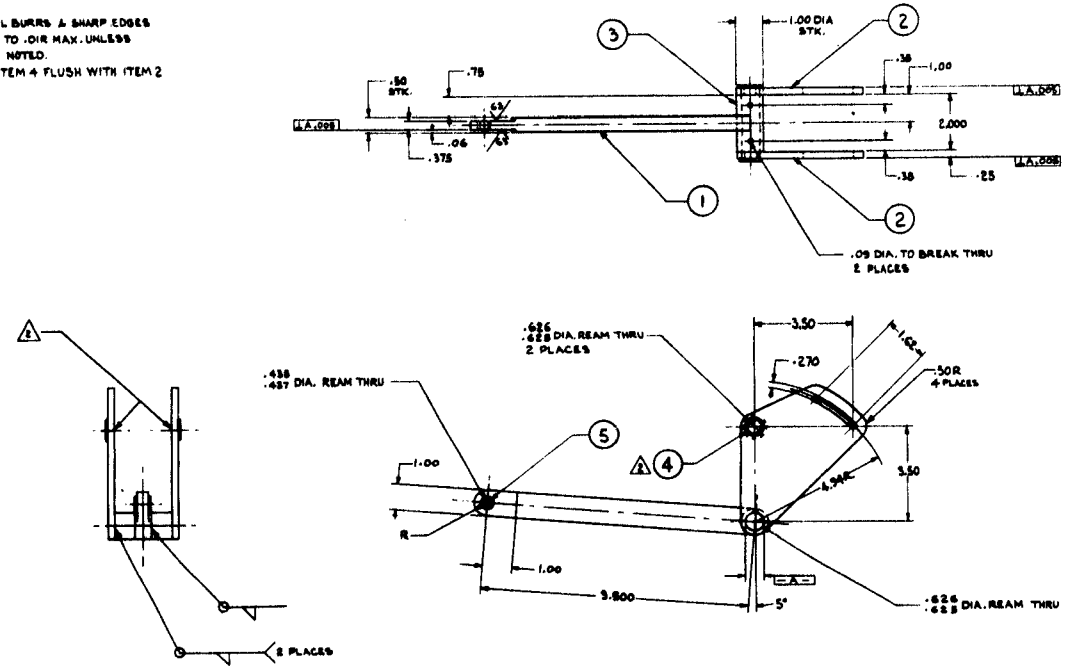

QY	SYM	CODE IDENT	PART OR IDENTIFYING NO.	NOMENCLATURE OR DESCRIPTION	MATERIAL	SPECIFICATION	UNIT WT.	ZONE	ITEM NO.
1				BUSH	BOST-BRONZE 7/16 x 1/4 I.D. x 3/8 LG. B-37-3				5
2				BUSH	BOST-BRONZE 5/8 x 1/2 I.D. x 1/2 LG. FB-810-4				4
1				CYLINDER	ALUM 6061-T6511	QQ-A-250/11 COND. T			3
2				PIVOT PLATE	ALUM6061-T6	QQ-A-250/11 COND. T			2
1				YOKE	ALUM 6061-T6	QQ-A-250/11 COND. T			1

Appendix A (Continued). YOKE

NOTES. 1. REMOVE ALL BURRS & SHARP EDGES EQUIVALENT TO .01R MAX. UNLESS OTHERWISE NOTED.

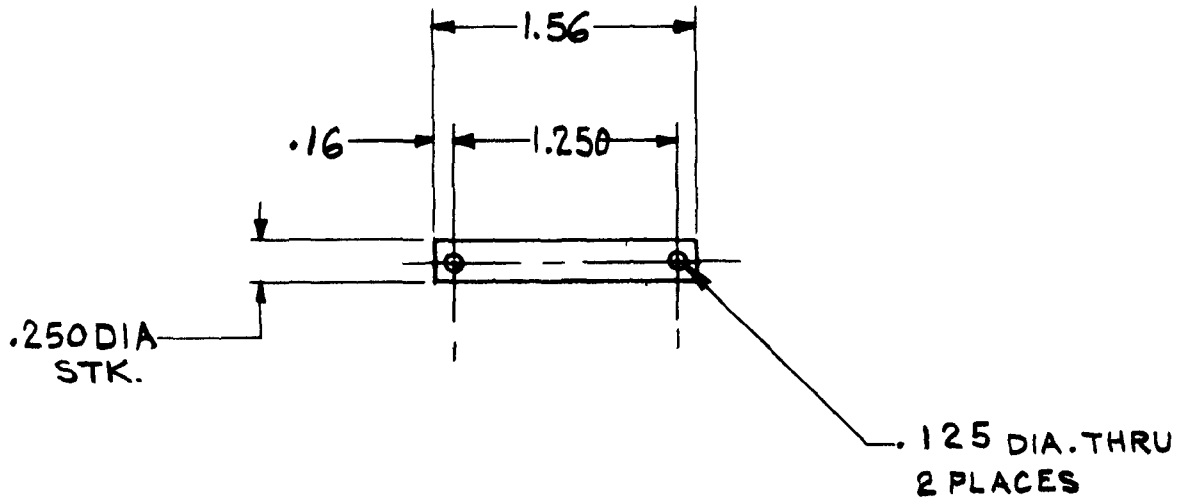

Appendix A (Continued). PIN

NOTES: REMOVE ALL BURRS & SHARP EDGES
EQUIVALENT TO .010 R MAX.

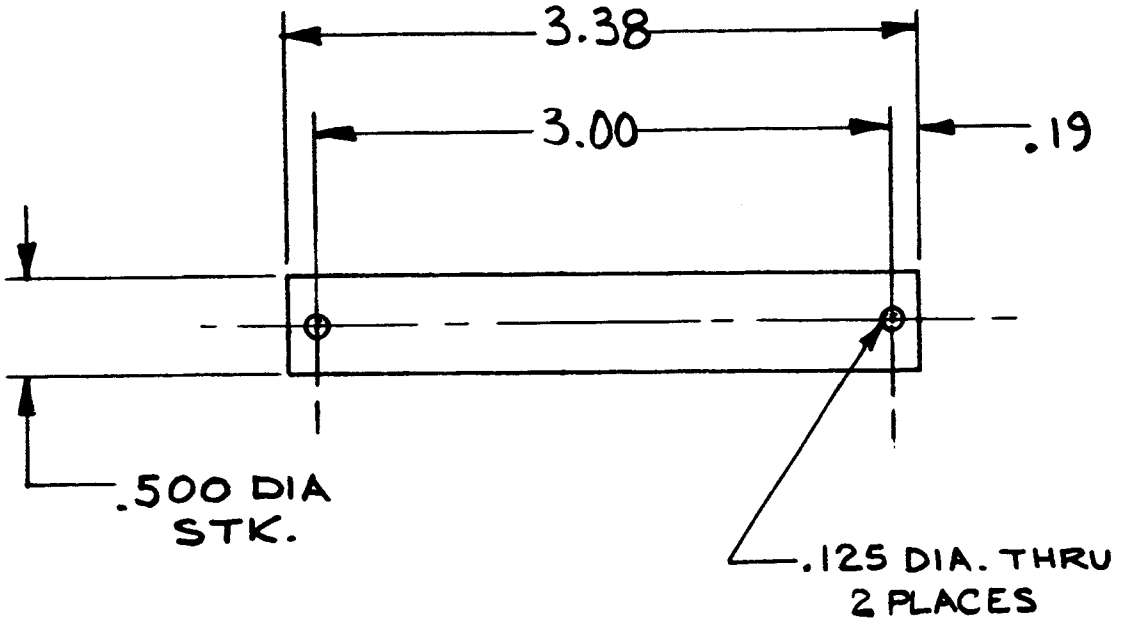

Appendix A (Continued). MAIN PIN

NOTES: 1. REMOVE ALL BURRS & SHARP EDGES EQUIVALENT TO .01R MAX. UNLESS OTHERWISE NOTED.

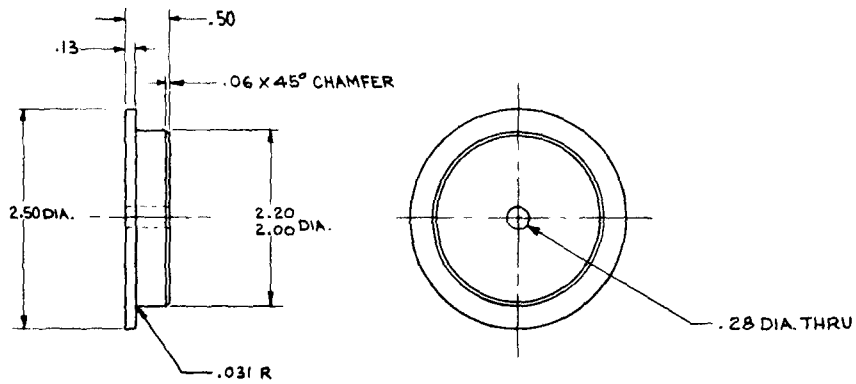

QTY REQD		SYM	CODE IDENT	PART OR IDENTIFYING NO.	NOMENCLATURE OR DESCRIPTION	MATERIAL	SPECIFICATION	UNIT WT.	ZONE	ITEM NO.
				-1		ALUM. 6061 (6151-T6)	QQ-A-325b COND. T			

Appendix A (Continued). PLUG

NOTES: 1. REMOVE BURRS & SHARP EDGES.

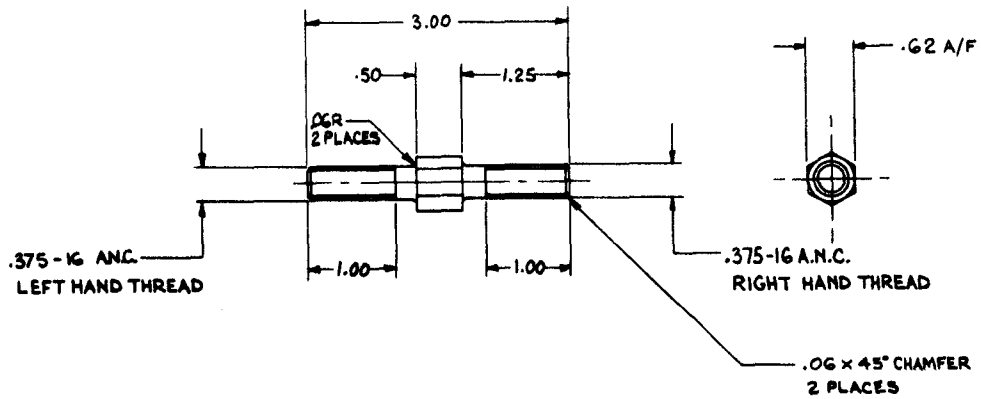

	1					HEX. BAR SST 303 C.D. H.T.	MIL-S-7720			
QTY REQD	-1	SYM	CODE IDENT	PART OR IDENTIFYING NO.	NOMENCLATURE OR DESCRIPTION	MATERIAL	SPECIFICATION	UNIT WT.	ZONE	ITEM NO.

Appendix A (Continued). ADJUSTING ROD

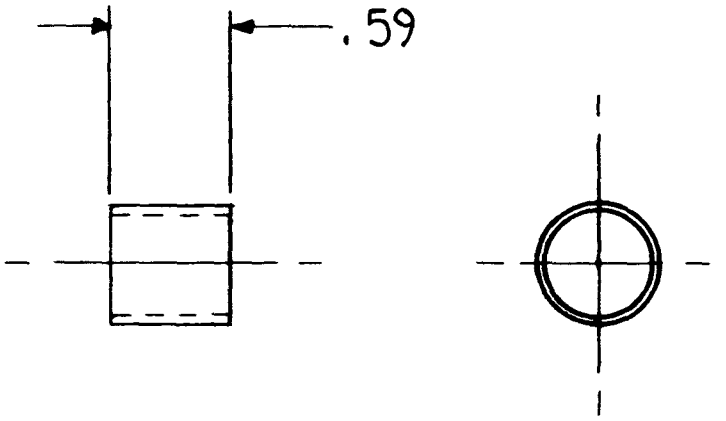

Appendix A (Continued). SPACER

NOTES: 1. REMOVE BURRS & SHARP EDGES.

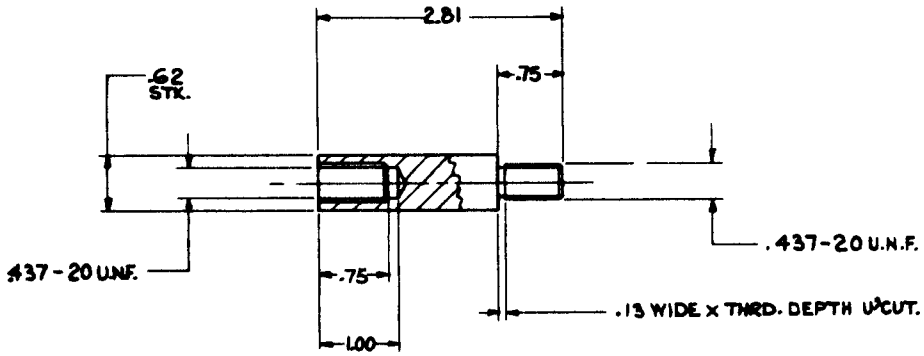

	1					SST. 303 C.D.H.T.	MIL-S-7720			
QTY REQD	-1	SYM	CODE IDENT	PART OR IDENTIFYING NO.	NOMENCLATURE OR DESCRIPTION	MATERIAL	SPECIFICATION	UNIT WT.	ZONE	ITEM NO.

Appendix A (Continued). EXTENSION

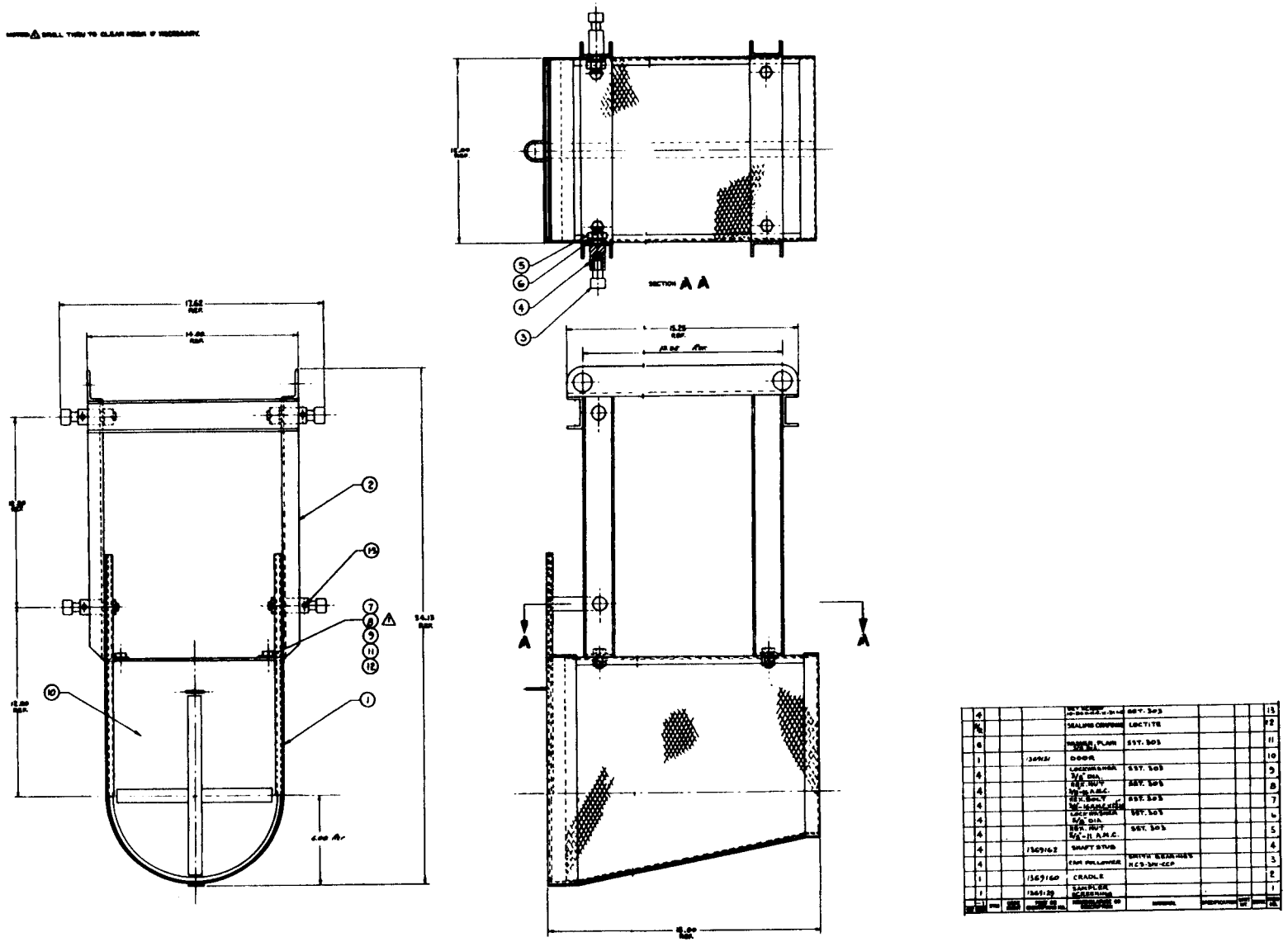

Appendix B. BULK SAMPLER ASSEMBLY

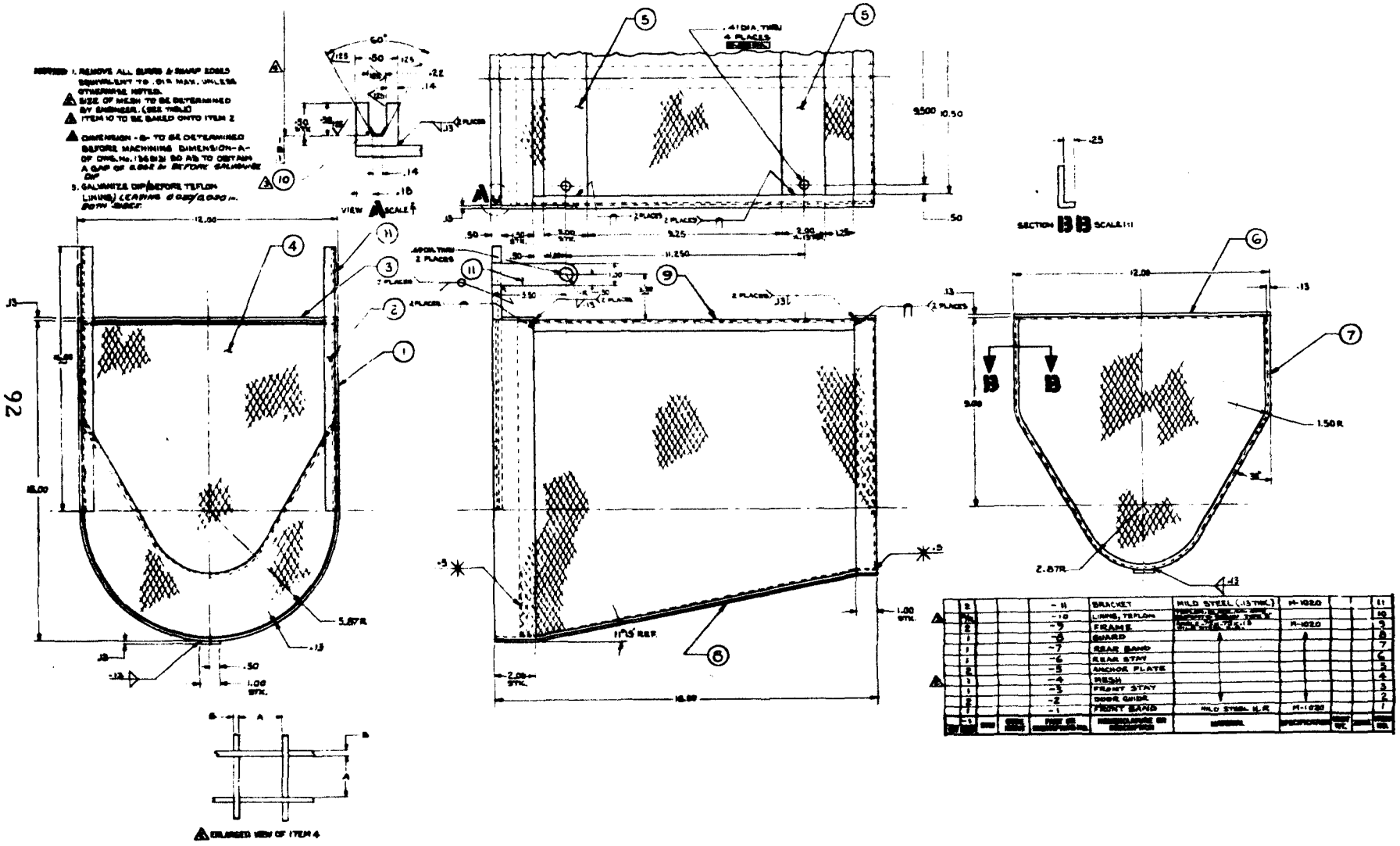

Appendix B (Continued). SCREENING SAMPLER

NOTES: 1. REMOVE ALL BURRS & SHARP EDGES EQUIVALENT TO .01R MAX. UNLESS OTHERWISE NOTED.
2. LOCATE TO P/N 1369156 BODY BEFORE SLOTTING.

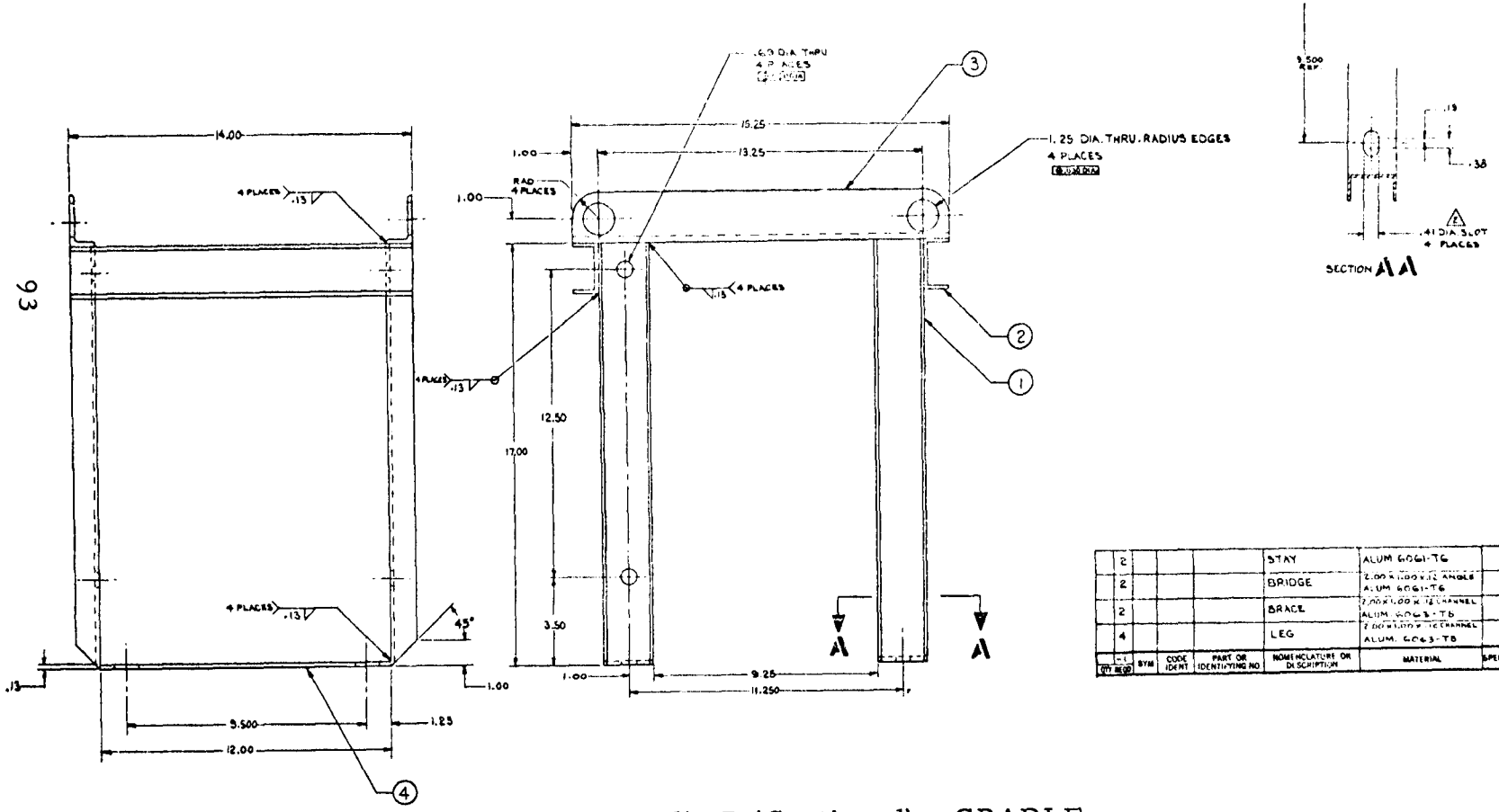

QTY REQD		SYM	CODE IDENT	PART OR IDENTIFYING NO	NOMENCLATURE OR DESCRIPTION	MATERIAL	SPECIFICATION	UNIT WT	ZONE	ITEM NO.
	2				STAY	ALUM 6061-T6				4
	2				BRIDGE	2.00 x 1.00 x .12 ANGLE ALUM 6061-T6				3
	2				BRACE	2.00 x 1.00 x .12 CHANNEL ALUM 6063-T6				2
	4				LEG	2.00 x 1.00 x .12 CHANNEL ALUM. 6063-T6				1

Appendix B (Continued). CRADLE

NOTES: 1. REMOVE ALL BURRS & SHARP EDGES EQUIVALENT TO .01R MAX. UNLESS OTHERWISE NOTED.

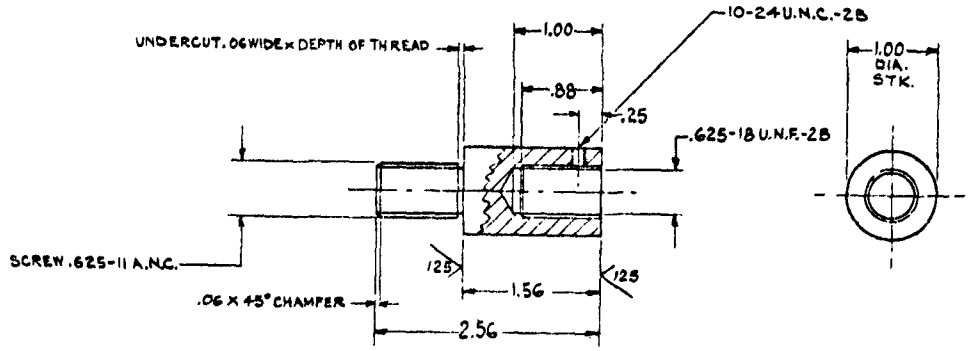

QTY REQD		SYM	CODE IDENT	PART OR IDENTIFYING NO.	NOMENCLATURE OR DESCRIPTION	MATERIAL	SPECIFICATION	UNIT WT.	ZONE	ITEM NO.
				-1		SST. 303 C.D. H.T.	MIL-S-7720			

Appendix B (Continued). SHAFT STUB

NOTES: 1. REMOVE ALL BURRS & SHARP EDGES EQUIVALENT TO .01R MAX. UNLESS OTHERWISE NOTED.
2. ITEM 5 TO BE BAKED ONTO ITEM 1
2 DIMENSION -A- TO BE MACHINED AFTER DETERMINING DIMENSION -B- OF DWG. No 1369129 SO AS TO OBTAIN A GAP OF .020/.030 AFTER TEFLON LINING.

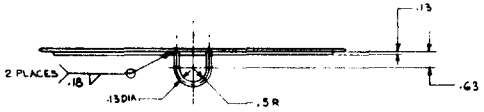

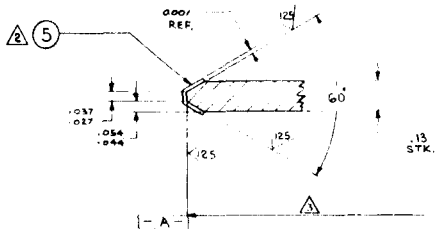

SECTION A A SCALE 4:1

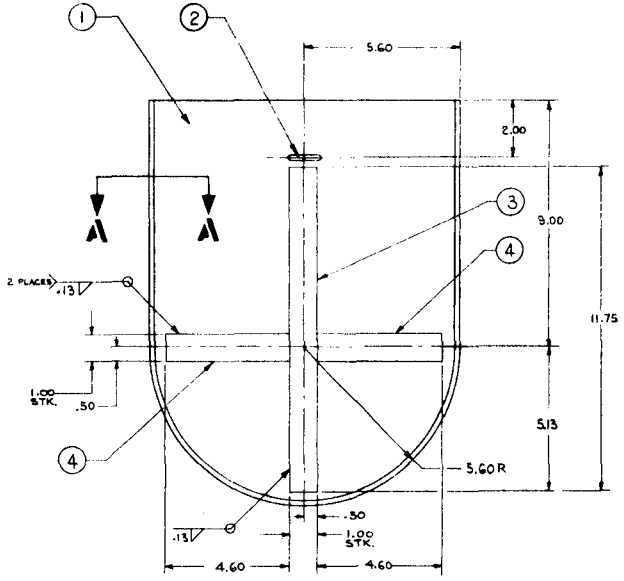

QTY REQD -1	SYM	CODE IDENT	PART OR IDENTIFYING NO.	NOMENCLATURE OR DESCRIPTION	MATERIAL	SPECIFICATION	UNIT WT.	ZONE	ITEM NO.
A/R			-5	LINING, TEFLON	TEFLON, BLACK DUPONT #855101 TYPE "S" (LOW BAKE)				5
2			-4	HORIZONTAL RIB	MILD STEEL H.R.	M1020			4
1			-3	VERTICAL RIB					3
1			-2	LIFTING EYE					2
1			-1	DOOR	MILD STEEL H.R.	M1020			1

Appendix B (Continued). DOOR

Appendix C

LOCAL CLIMATOLOGICAL DATA

U S DEPARTMENT OF COMMERCE - MAURICE H. STANS, Secretary

ENVIRONMENTAL SCIENCE SERVICES ADMINISTRATION -- ENVIRONMENTAL DATA SERVICE

SAN FRANCISCO, CALIFORNIA
FEDERAL OFFICE BLDG.
JANUARY 1969

Latitude 37° 47' N Longitude 122° 25' W Elevation (ground) 52 ft Standard time used PACIFIC

Date	Temperature (F) Maximum	Minimum	Average	Departure from normal	Average dew point	Degree days (Base 65) Heating	Cooling	Weather types shown by code 1-9 on dates of occurrence (Fog, Heavy Fog, Thunderstorm, Rain, Hail, Glaze, Duststorm, Smoke, Haze, Blowing Snow)	Snow, Sleet or Ice on ground at 08AM (In)	Precipitation Water equivalent (In)	Snow, sleet (In)	Avg station pressure (In) Elev. 155 feet msl	Wind Resultant direction	Resultant speed (m.p.h.)	Average speed (m.p.h.)	Fastest mile Speed (m.p.h.)	Direction	Sunshine Hours and tenths	Percent of possible	Sky cover (Tenths) Sunrise to sunset	Midnight to midnight	Date
1	2	3	4	5	6	7A	7B	8	9	10	11	12	13	14	15	16	17	18	19	20	21	22
1	54	44	49	-2		16	0	DATA ARE NOT ENTERED IN THIS COLUMN BECAUSE RECORDS OF WEATHER TYPES MAY BE INCOMPLETE FOR PART OF THE DAY	0	0	0					11	NW	6.1	63			1
2	53	44	49	-2		16	0		0	0	0					13	NW	5.5	58			2
3	50	44	47	-4		18	0		0	0	0					14	N	6.5	68			3
4	47	43	45	-6		20	0		0	0	0					17	NW	7.1	73			4
5	51	41	46	-5		19	0		0	0	0					16	N	8.3	85			5
6	48	41	45	-6		20	0		0	0	0					17	NW	5.0	52			6
7	51	39	45	-6		20	0		0	T	0					15	SW	0.0	0			7
8	54	44	49	-2		16	0		0	0	0					13	NE	7.9	82			8
9	50	43	47	-4		18	0		0	0	0					9	N	0.7	7			9
10	56	41	49	-2		16	0		0	0	0					10	W	5.5	57			10
11	54	46	50	-1		15	0		0	.39	0					17	SW	0.0	0			11
12	54	51	53	2		12	0		0	.46	0					26	SE	0.0	0			12
13	56	47	52	2		13	0		0	.62	0					18	SW	0.0	0			13
14	55	45	50	0		15	0		0	0	0					17	W	7.1	72			14
15	54	43	49	-1		16	0		0	0	0					10	W	6.2	65			15
16	52	46	49	-1		16	0		0	0	0					9	W	3.5	35			16
17	54	42	48	-3		17	0		0	0	0					9	E	6.8	69			17
18	59	45	52	1		13	0		0	1.51	0					31	SW	0.0	0			18
19	61	57	59	8		6	0		0	1.33	0					29	SW	0.5	5			19
20	61*	56	59	8		6	0		0	.47	0					25	SE	0.0	0			20
21	59	49	54	3		11	0		0	.50	0					34	SW	4.3	43			21
22	53	44	49	-2		16	0		0	.02	0					21	W	5.6	55			22
23	45	40	43	-8		22	0		0	.12	0					19	E	2.8	28			23
24	48	40	44	-7		21	0		0	.56	0					9	SE	0.0	0			24
25	60	48	54	3		11	0		0	.67	0					33	SE	1.5	15			25
26	59	45	52	1		13	0		0	.26	0					34	SW	6.9	68			26
27	50	44	47	-4		18	0		0	.28	0					16	W	6.5	64			27
28	45	39	42	-9		23	0		0	.25	0					32	SW	5.3	52			28
29	48	38*	43	-8		22	0		0	.29	0					19	SE	5.5	53			29
30	49	41	45	-6		20	0		0	.04	0					9	W	4.9	48			30
31	50	40	45	-6		20	0		0	.01	0					14	W	8.8	85			31
	Sum 1640	Sum 1370				Total 505	Total 0		Number of days Precipitation ≥ .01 inch 17	Total 7.74	Total 0	For the month				34	SW	Total 128.8	% for month	Sum	Sum	
	Avg 52.9	Avg 44.2	Avg 48.6	Dep -2.1	Avg	Dep 62	Dep		Snow, sleet ≥ 1.0 inch 0	Dep 3.19						Date 26*		Possible 304.7	42	Avg	Avg	
	Number of days Maximum Temp ≥ 32 0	Maximum Temp ≥ 90 0	Minimum Temp ≤ 32 0	Minimum Temp ≤ 0 0		Season to date Total 1776 Dep 128	Total 0 Dep		Thunderstorms 0 Heavy fog X	Greatest in 24 hours and dates Precipitation 1.83 18-19						Greatest depth on ground of snow, sleet or ice and date Snow, Sleet 0						

ENTRIES OF TRACE AMOUNTS IN THE HOURLY PRECIPITATION TABLE MAY BE INCOMPLETE. OFFICE CLOSED NIGHTS AND WEEK ENDS.

HOURLY PRECIPITATION (Water equivalent in inches)

Date	A M Hour ending at 1	2	3	4	5	6	7	8	9	10	11	12	P M Hour ending at 1	2	3	4	5	6	7	8	9	10	11	12	Date
1																									1
2																									2
3																									3
4																									4
5																									5
6																									6
7																				T	T				7
8																									8
9																									9
10																									10
11		T	.02	.03	.02	.05	.03	.06	.05	.07	.02	.02	.02												11
12																	.03	.06	.06	.10	.03	.06	.06	.06	12
13	.09	.03	.01				.06	.12	.13	.08	.07	.02	.01												13
14																									14
15																									15
16																									16
17																									17
18							.01			.02	.01	.04	.16	.21	.24	.35	.11	.08	.01	T	.01	.01	.13	.12	18
19	.06			.02	.05	.18	.01		.01	.02					.01	.02	.08	.03	T	.01	.08	.09	.04	.02	19
20	.04	T	.01	T	.01	T	.03	.08	.09	.04	T	.02	T		.02	.04	.02			.01	.01	.04	T	.01	20
21	.01	.03		.01	.02	.14	.07	.03	T	.01		T	.01	T			.02	.11	.01	.03					21
22																.02									22
23																	T	.01	.02	.02	.01	.02	.03	.01	23
24	.01		.01	.02	.01	.01	T	T	.01	T	.01	.02	.04	.01	T		.01	T	.01	.01	.02	.10	.12	.14	24
25	.12	.07	.02	.01		.01	.01		.01		.13			.01		.02	.02						.07	.17	25
26	.17	.01		.01			.01				T				.03	.01		.02							26
27												.05			.03		.05		.01	.02	.04	.07	.01	T	27
28	.02	.02	.03	.04	.01	.01	.02	.01	.03	.02	.03			.01											28
29																				.01	.04	.01	.12	.07	29
30	.03						.01																		30
31																						.01			31

* Extreme temperatures for the month May be the last of more than one occurrence
– Below zero temperature or negative departure from normal
$ - 70° at Alaskan stations
+ Also on an earlier date, or dates
X Heavy fog restricts visibility to ¼ mile or less
T In the Hourly Precipitation table and in columns 9, 10 and 11 indicates an amount too small to measure

The season for degree days begins with July for heating and with January for cooling
Data in columns 6, 12, 13, 14 and 15 are based on 8 observations per day at 3 hour intervals
Wind directions are those from which the wind blows. Resultant wind is the vector sum of wind directions and speeds divided by the number of observations. Figures for directions are tens of degrees from true North, i.e., 09 = East, 18 = South, 27 = West, 36 = North and 00 = Calm. When directions are in tens of degrees in Col. 17, entries in Col. 16 are fastest observed 1-minute speeds. If the / appears in Col. 17, speeds are gusts

Any errors detected will be corrected and changes in summary data will be annotated in the annual summary.

Subscription Price: Local Climatological Data $1.00 per year including annual Summary if published. Single copy: 10 cents for monthly Summary; 15 cents for annual Summary. Checks or money orders should be made payable and remittances and correspondence should be sent to the Superintendent of Documents, U. S. Government Printing Office, Washington, D. C. 20402.

I certify that this is an official publication of the Environmental Science Services Administration, and is compiled from records on file at the National Weather Records Center, Asheville, North Carolina 28801.

William H. Haggard

Director, National Weather Records Center

SUMMARY BY HOURS

AVERAGES

Hour (Local time)	Sky cover (Tenths)	Station pressure (In.)	Dry bulb temp. (°F)	Wet bulb temp. (°F)	Rel. hum. (%)	Dew point (°F)	Wind speed (m.p.h.)	Resultant wind Direction	Resultant wind Speed (m.p.h.)

USCOMM—ESSA—ASHEVILLE 300

LOCAL CLIMATOLOGICAL DATA

U. S. DEPARTMENT OF COMMERCE - MAURICE H. STANS, Secretary

ENVIRONMENTAL SCIENCE SERVICES ADMINISTRATION -- ENVIRONMENTAL DATA SERVICE

SAN FRANCISCO, CALIFORNIA
FEDERAL OFFICE BLDG.
FEBRUARY 1969

Latitude 37° 47′ N Longitude 122° 25′ W Elevation (ground) 52 ft. Standard time used: PACIFIC

Date	Temperature (°F) Maximum	Minimum	Average	Departure from normal	Average dew point	Degree days (Base 65°) Heating	Cooling	Weather types shown by code 1-9 on dates of occurrence (1 Fog, 2 Heavy Fog, 3 Thunderstorm, 4 Sleet, 5 Hail, 6 Glaze, 7 Duststorm, 8 Smoke, Haze, 9 Blowing Snow)	Snow, Sleet, or Ice on ground at 08AM (In.)	Precipitation Water equivalent (In.)	Snow, sleet (In.)	Avg. station pressure (In.) Elev. 155 feet m.s.l.	Wind Resultant direction	Resultant speed (m.p.h.)	Average speed (m.p.h.)	Fastest mile Speed (m.p.h.)	Direction	Sunshine Hours and tenths	Percent of possible	Sky cover (Tenths) Sunrise to sunset	Midnight to midnight	Date
1	2	3	4	5	6	7A	7B	8	9	10	11	12	13	14	15	16	17	18	19	20	21	22
1	52	48	50	-2		15	0	DATA ARE NOT ENTERED IN THIS COLUMN BECAUSE RECORDS OF WEATHER TYPES MAY BE INCOMPLETE FOR PART OF THE DAY	0	.11	0					19	W	7.8	76			1
2	55	46	51	-1		14	0		0	0	0					12	W	10.4	100			2
3	56	44	50	-2		15	0		0	0	0					13	N	9.4	91			3
4	55	41*	48	-4		17	0		0	.06	0					23	SE	3.4	33			4
5	52	44	48	-4		17	0		0	.89	0					34	SE	2.7	25			5
6	52	43	48	-4		17	0		0	.38	0					24	SW	6.5	62			6
7	53	47	50	-2		15	0		0	0	0					11	E	6.7	64			7
8	55	45	50	-2		15	0		0	.02	0					18	SE	3.9	37			8
9	57	52	55	3		10	0		0	.02	0					18	SW	3.3	31			9
10	64*	53	59	6		6	0		0	0	0					20	S	6.3	59			10
11	57	49	53	0		12	0		0	1.13	0					19	SE	0.0	0			11
12	54	47	51	-2		14	0		0	0	0					25	W	10.7	100			12
13	56	43	50	-3		15	0		0	0	0					16	W	8.6	80			13
14	52	48	50	-3		15	0		0	.89	0					26	SE	0.1	1			14
15	56	49	53	0		12	0		0	.47	0					18	SW	7.3	67			15
16	58	48	53	-1		12	0		0	0	0					11	W	8.5	81			16
17	53	46	50	-4		15	0		0	.11	0					14	SW	3.9	35			17
18	53	47	50	-4		15	0		0	.13	0					18	W	4.3	39			18
19	53	50	52	-2		13	0		0	0	0					17	W	0.4	3			19
20	51	46	49	-5		16	0		0	0	0					27	SW	8.0	73			20
21	48	44	46	-8		19	0		0	.29	0					17	SE	2.5	23			21
22	50	44	47	-7		18	0		0	.21	0					30	SE	7.1	64			22
23	50	43	47	-7		18	0		0	.40	0					24	SE	5.4	48			23
24	52	45	49	-5		16	0		0	.63	0					34	SE	6.2	55			24
25	54	45	50	-4		15	0		0	.27	0					21	SW	8.5	76			25
26	53	44	49	-5		16	0		0	.03	0					14	SE	5.6	50			26
27	53	47	50	-4		15	0		0	.42	0					28	SE	1.9	17			27
28	53	47	50	-4		15	0		0	.80	0					26	SW	4.4	39			28
Sum	1507	Sum	1295			Total	412	Total	0	Total	7.26	Total	0	For the month:		34	SE	Total	%	Sum	Sum	
Avg.	53.8	Avg.	46.3	Avg.	50.1	Dep.	-2.9	Avg.	Dep.	Number of days Precipitation ≥ .01 inch	19	Dep.	3.60			Date:	24*	154.1 Possible	for month	Avg.	Avg.	
																		302.6	51			

Number of days Maximum Temp. ≥ 90°	≤ 32°	Minimum Temp. ≥ 32°	≤ 0°	Season to date Total	Dep.	Number of days Snow, sleet ≥ 1.0 inch	0	Thunderstorms	Heavy fog X	Greatest in 24 hours and dates Precipitation	Snow, Sleet	Greatest depth on ground of snow, sleet or ice and date
0	0	0	0	2188	0					1.32 14-15	0	0
				204								

HOURLY PRECIPITATION (Water equivalent in inches)— ENTRY OF TRACE AMOUNTS MAY BE INCOMPLETE

Date	A. M. Hour ending at 1	2	3	4	5	6	7	8	9	10	11	12	P. M. Hour ending at 1	2	3	4	5	6	7	8	9	10	11	12	Date
1	.01		.01	.01	.03	.04	.01																		1
2																									2
3																									3
4																						.04	.01	.01	4
5	.07	.24	.14	.05			.02								.07	.10	.10			.04	.03		.02	.01	5
6			.14	.07	.03	.10			.02		.02														6
7																									7
8																								.02	8
9								.02																	9
10																									10
11				.03	.06	.13	.09	.10	.11	.13	.17	.14	.04	.05	.05	T	.02	.01							11
12																									12
13																									13
14								T	T			.05	.13	.05	.04	.14	.19	.09	.03		.01	.03	.07	.06	14
15	.06		.28	.07					.02										.04						15
16																									16
17												.01	.06	.02	.02	T									17
18	.08	.04		.01																					18
19																									19
20																									20
21															.03	.05	.01	.02	.04	.03	.01	.02	.05	.03	21
22	.01																						.08	.12	22
23	.29	.05												.02			.04								23
24	.02	.08	.16	.02				.04	.02	.08	T			.15	T				.03		.02	.01			24
25		.09	.03		.07												T	.01			.06		.01		25
26						.01	.01	.01							T										26
27													.01	.04	.01	.02	T	.01				.02	.19	.12	27
28	.01	.20	.04		.03	.02	.06	.09	.11	.08	.03								.01	.01	.09	.01		.01	28

* Extreme temperatures for the month. May be the last of more than one occurrence.
– Below zero temperature or negative departure from normal.
‡ ≥ 70° at Alaskan stations.
\+ Also on an earlier date, or dates.
X Heavy fog restricts visibility to ¼ mile or less.
T In the Hourly Precipitation table and in columns 9, 10, and 11 indicates an amount too small to measure.

The season for degree days begins with July for heating and with January for cooling.
Data in columns 6, 12, 13, 14, and 15 are based on 8 observations per day at 3-hour intervals.
Wind directions are those from which the wind blows. Resultant wind is the vector sum of wind directions and speeds divided by the number of observations. Figures for directions are tens of degrees from true North; i.e., 09 = East, 18 = South, 27 = West, 36 = North, and 00 = Calm. When directions are in tens of degrees in Col. 17, entries in Col. 16 are fastest observed 1-minute speeds. If the / appears in Col. 17, speeds are gusts.

Any errors detected will be corrected and changes in summary data will be annotated in the annual summary.

Subscription Price: Local Climatological Data $1.00 per year including annual Summary if published. Single copy: 10 cents for monthly Summary; 15 cents for annual Summary. Checks or money orders should be made payable and remittances and correspondence should be sent to the Superintendent of Documents, U. S. Government Printing Office, Washington, D. C. 20402.

I certify that this is an official publication of the Environmental Science Services Administration, and is compiled from records on file at the National Weather Records Center, Asheville, North Carolina 28801.

William H. Haggard

Director, National Weather Records Center

SUMMARY BY HOURS

Hour (Local time)	AVERAGES Sky cover (In tenths)	Station pressure (In.)	Dry bulb (°F)	Wet bulb (°F)	Rel. hum. %	Dew point (°F)	Wind speed (m.p.h.)	Resultant wind Direction	Speed (m.p.h.)

USCOMM—ESSA—ASHEVILLE 300

LOCAL CLIMATOLOGICAL DATA

U. S. DEPARTMENT OF COMMERCE - MAURICE H. STANS, Secretary

ENVIRONMENTAL SCIENCE SERVICES ADMINISTRATION -- ENVIRONMENTAL DATA SERVICE

SAN FRANCISCO, CALIFORNIA
FEDERAL OFFICE BLDG.
MARCH 1969

Latitude 37° 47′ N Longitude 122° 25′ W Elevation (ground) 52 ft. Standard time used: PACIFIC

Date	Temperature (°F) Maximum	Minimum	Average	Departure from normal	Average dew point	Degree days (Base 65°) Heating	Cooling	Weather types shown by code 1-9 on dates of occurrence 1 2 3 4 5 6 7 8 9 (Fog, Heavy Fog, Thunderstorm, Sleet, Hail, Glaze, Duststorm, Blowing Snow, Blowing Sand)	Snow, Sleet, or ice on ground at 08AM (In.)	Precipitation Water equivalent (In.)	Snow, sleet (In.)	Avg. station pressure (In.) Elev. 155 feet m.s.l.	Wind Resultant direction	Resultant speed (m.p.h.)	Average speed (m.p.h.)	Fastest mile Speed (m.p.h.)	Direction	Sunshine Hours and tenths	Percent of possible	Sky cover (Tenths) Sunrise to sunset	Midnight to midnight	Date
1	2	3	4	5	6	7A	7B	8	9	10	11	12	13	14	15	16	17	18	19	20	21	22
1	56	46	51	-3		14	0	DATA ARE NOT ENTERED IN THIS COLUMN BECAUSE RECORDS OF WEATHER TYPES MAY BE INCOMPLETE FOR PART OF THE DAY	0	0	0					11	W	10.5	92			1
2	53	46	50	-4		15	0		0	.16	0					29	SW	5.2	45			2
3	55	44	50	-4		15	0		0	0	0					23	W	11.4	100			3
4	61	47	54	0		11	0		0	0	0					16	NW	11.5	100			4
5	59	48	54	0		11	0		0	0	0					26	W	11.5	100			5
6	56	46	51	-3		14	0		0	0	0					21	W	11.6	100			6
7	53	44	49	-5		16	0		0	0	0					23	W	11.6	100			7
8	54	44	49	-5		16	0		0	0	0					16	W	11.6	100			8
9	51	45	48	-6		17	0		0	0	0					26	W	11.4	98			9
10	55	44	50	-5		15	0		0	0	0					19	W	11.7	100			10
11	53	45	49	-6		16	0		0	0	0					15	W	9.9	84			11
12	50	44	47	-8		18	0		0	.31	0					16	NE	6.2	53			12
13	59	43*	51	-4		14	0		0	0	0					14	SW	10.3	87			13
14	64	48	56	1		9	0		0	0	0					18	SW	11.5	97			14
15	62	47	55	0		10	0		0	0	0					17	W	11.9	100			15
16	56	46	51	-4		14	0		0	.11	0					14	W	8.9	75			16
17	58	49	54	-1		11	0		0	.15	0					13	W	6.0	50			17
18	58	49	54	-1		11	0		0	.02	0					18	SW	10.5	87			18
19	64	48	56	1		9	0		0	0	0					17	W	12.1	100			19
20	53	46	50	-5		15	0		0	.26	0					13	SE	1.3	11			20
21	57	47	52	-3		13	0		0	0	0					17	W	11.0	91			21
22	57	48	53	-2		12	0		0	0	0					17	SW	10.7	88			22
23	71	49	60	5		5	0		0	0	0					12	NE	11.3	92			23
24	72	58	65	10		0	0		0	0	0					15	NE	12.3	100			24
25	74	55	65	10		0	0		0	0	0					11	NE	12.3	100			25
26	78*	55	67	12		0	2		0	0	0					11	W	12.3	100			26
27	77	58	68	13		0	3		0	0	0					13	W	12.4	100			27
28	71	49	60	5		5	0		0	0	0					24	W	12.4	99			28
29	59	49	54	-1		11	0		0	0	0					18	W	11.2	90			29
30	66	54	60	5		5	0		0	0	0					22	W	10.6	85			30
31	56	52	54	-1		11	0		0	0	0					20	SW	9.7	77			31
Sum	Sum					Total	Total			Total	Total	For the month:						Total	%	Sum	Sum	
1868	1493					333	5	Number of days		1.01	0					29	SW	322.8	for			
Avg.	Avg.	Avg.	Dep.	Avg.		Dep.	Dep.	Precipitation		Dep.						Date:	02	Possible	month	Avg.	Avg.	
60.3	48.2	54.3	-0.4			14		≥ .01 inch	6	-1.92								371.0	87			
						Season to date		Snow, sleet														
Number of days						Total	Total	≥ 1.0 inch	0	Greatest in 24 hours and dates								Greatest depth on ground of snow, sleet or ice and date				
Maximum Temp.		Minimum Temp.				2521	5	Thunderstorms		Precipitation		Snow, Sleet										
≥ 32°	≥ 90° ‡	≤ 32°	≥ 0°			Dep.	Dep.	Heavy fog X		.31	12	0						0				
0	0	0	0			218																

HOURLY PRECIPITATION (Water equivalent in inches) - ENTRY OF TRACE AMOUNTS MAY BE INCOMPLETE

Date	A. M. Hour ending at 1	2	3	4	5	6	7	8	9	10	11	12	P. M. Hour ending at 1	2	3	4	5	6	7	8	9	10	11	12	Date
1																									1
2													.05	.06					.02	.03					2
3																									3
4																									4
5																									5
6																									6
7																									7
8																									8
9																									9
10																									10
11																									11
12				.04	.06	.08	T	T	.01	T	.04	.07	.01												12
13																									13
14																									14
15																									15
16																						.03	.08		16
17			.02	.01	.01	.03	.03	.04	.01	T															17
18					.01	T	.01																		18
19																									19
20											.04	.10	.03	.04	.01			.03						.01	20
21																									21
22																									22
23																									23
24																									24
25																									25
26																									26
27																									27
28																									28
29																									29
30																									30
31																									31

* Extreme temperatures for the month. May be the last of more than one occurrence.
– Below zero temperature or negative departure from normal.
‡ ≥ 70° at Alaskan stations.
+ Also on an earlier date, or dates.
X Heavy fog restricts visibility to ¼ mile or less.
T In the Hourly Precipitation table and in columns 9, 10, and 11 indicates an amount too small to measure.

The season for degree days begins with July for heating and with January for cooling.
Data in columns 6, 12, 13, 14, and 15 are based on 8 observations per day at 3-hour intervals.
Wind directions are those from which the wind blows. Resultant wind is the vector sum of wind directions and speeds divided by the number of observations. Figures for directions are tens of degrees from true North; i.e., 09 = East, 18 = South, 27 = West, 36 = North, and 00 = Calm. When directions are in tens of degrees in Col. 17, entries in Col. 16 are fastest observed 1-minute speeds. If the / appears in Col. 17, speeds are gusts.

Any errors detected will be corrected and changes in summary data will be annotated in the annual summary.

Subscription Price: Local Climatological Data $1.00 per year including annual Summary if published. Single copy: 10 cents for monthly Summary; 15 cents for annual Summary. Checks or money orders should be made payable and remittances and correspondence should be sent, to the Superintendent of Documents, U. S. Government Printing Office, Washington, D. C. 20402.

I certify that this is an official publication of the Environmental Science Services Administration, and is compiled from records on file at the National Weather Records Center, Asheville, North Carolina 28801.

William H. Haggard

Director, National Weather Records Center

SUMMARY BY HOURS

AVERAGES									Resultant wind	
Hour (Local time)	Sky cover (Tenths)	Station pressure (In.)	Dry bulb (°F)	Wet bulb (°F)	Rel. hum. %	Dew point (°F)	Wind speed (m.p.h.)		Direction	Speed (m.p.h.)

USCOMM—ESSA—ASHEVILLE 300

LOCAL CLIMATOLOGICAL DATA

U. S. DEPARTMENT OF COMMERCE - MAURICE H. STANS, Secretary

ENVIRONMENTAL SCIENCE SERVICES ADMINISTRATION -- ENVIRONMENTAL DATA SERVICE

SAN FRANCISCO, CALIFORNIA
FEDERAL OFFICE BLDG.
APRIL 1969

Latitude 37° 47′ N Longitude 122° 25′ W Elevation (ground) 52 ft. Standard time used: PACIFIC

Date	Temperature (°F) Maximum	Minimum	Average	Departure from normal	Average dew point	Degree days (Base 65°) Heating	Cooling	Weather types shown by code 1-9 on dates of occurrence (Fog, Heavy Fog, Thunderstorm, Sleet, Hail, Glaze, Duststorm, Smoke, Haze, Blowing Snow)	Snow, Sleet, or Ice on ground at 08AM (In.)	Precipitation Water equivalent (In.)	Snow, sleet (In.)	Avg. station pressure (In.) Elev. 155 feet m.s.l.	Wind Resultant direction	Resultant speed (m.p.h.)	Average speed (m.p.h.)	Fastest mile Speed (m.p.h.)	Direction	Sunshine Hours and tenths	Percent of possible	Sky cover (Tenths) Sunrise to sunset	Midnight to midnight	Date
1	2	3	4	5	6	7A	7B	8	9	10	11	12	13	14	15	16	17	18	19	20	21	22
1	58	51	55	0		10	0	DATA ARE NOT ENTERED IN THIS COLUMN BECAUSE RECORDS OF WEATHER TYPES MAY BE INCOMPLETE FOR PART OF THE DAY	0	0	0					19	W	10.8	85			1
2	58	48	53	-2		12	0		0	.31	0					17	W	4.6	36			2
3	55	46	51	-5		14	0		0	0	0					15	W	12.7	100			3
4	60	47	54	-2		11	0		0	.05	0					26	S	10.5	82			4
5	54	46	50	-6		15	0		0	.64	0					18	SW	3.0	23			5
6	54	45*	50	-6		15	0		0	.19	0					17	W	12.8	99			6
7	62	48	55	-1		10	0		0	0	0					17	W	12.8	99			7
8	61	50	56	0		9	0		0	0	0					16	SW	12.7	98			8
9	61	48	55	-1		10	0		0	.17	0					16	SW	9.8	75			9
10	66	51	59	3		6	0		0	0	0					22	W	12.9	99			10
11	57	50	54	-2		11	0		0	0	0					19	W	8.7	67			11
12	56	50	53	-3		12	0		0	.02	0					24	W	11.6	89			12
13	58	48	53	-3		12	0		0	0	0					23	W	12.0	92			13
14	56	48	52	-4		13	0		0	0	0					24	W	13.1	100			14
15	62	49	56	0		9	0		0	0	0					22	W	13.2	100			15
16	69	50	60	4		5	0		0	0	0					22	W	13.2	100			16
17	56	48	52	-4		13	0		0	T	0					23	W	3.1	23			17
18	58	49	54	-2		11	0		0	0	0					21	W	13.3	100			18
19	58	48	53	-3		12	0		0	0	0					25	W	13.3	100			19
20	68	49	59	3		6	0		0	0	0					19	W	12.7	95			20
21	60	49	55	-1		10	0		0	0	0					23	W	13.4	100			21
22	59	50	55	-1		10	0		0	.01	0					25	SW	8.8	66			22
23	58	48	53	-3		12	0		0	.34	0					25	SW	9.2	68			23
24	56	47	52	-4		13	0		0	.01	0					24	W	13.1	97			24
25	59	48	54	-2		11	0		0	0	0					21	W	13.6	100			25
26	68	51	60	4		5	0		0	0	0					19	W	13.6	100			26
27	73*	51	62	6		3	0		0	0	0					17	W	13.6	100			27
28	63	48	56	0		9	0		0	T	0					20	W	9.2	67			28
29	57	48	53	-3		12	0		0	0	0					24	W	12.9	95			29
30	54	47	51	-5		14	0		0	0	0					34	SW	13.6	99			30
	Sum 1794	Sum 1456				Total 315	Total 0	Number of days		Total 1.74	Total 0	For the month:				34	SW	Total 337.8	% for month	Sum	Sum	
	Avg. 59.8	Avg. 48.5	Avg. 54.2	Dep. -1.5	Avg.	Dep. 36	Dep.	Precipitation ≥ .01 inch	9	Dep. 0.30						Date: 30		Possible 395.5	85	Avg.	Avg.	
	Number of days Maximum Temp. ≥ 32°	Maximum Temp. ≥ 90° ‡	Minimum Temp. ≤ 32°	Minimum Temp. ≤ 0°		Season to date Total 2836	Total 5	Snow, sleet ≥ 1.0 inch	0	Greatest in 24 hours and dates Precipitation .66	4-5	Snow, Sleet 0				Greatest depth on ground of snow, sleet or ice and date 0						
	0	0	0	0		Dep. 254	Dep.	Thunderstorms / Heavy fog	X													

HOURLY PRECIPITATION (Water equivalent in inches)—ENTRY OF TRACE AMOUNTS MAY BE INCOMPLETE.

Date	A. M. Hour ending at 1	2	3	4	5	6	7	8	9	10	11	12	P. M. Hour ending at 1	2	3	4	5	6	7	8	9	10	11	12	Date
1																									1
2								T	T	T	.05	.02			T	.13	.02	.05	.04	T					2
3																									3
4																						.01	.03	.01	4
5	.12	.03	.01	.03	.02	.04	.04	.05	.06	.06								.09	.06				.03		5
6				.17	.02																				6
7																									7
8																									8
9	.03	.06	.01	.03	.03		.01																		9
10																									10
11																									11
12												.02													12
13																									13
14																									14
15																									15
16																									16
17																T	T	T	T						17
18																									18
19																									19
20																									20
21																									21
22																								.01	22
23	.10	.14	.05															.01		.04					23
24				.01																					24
25																									25
26																									26
27																									27
28							T	T																	28
29																									29
30																									30

* Extreme temperatures for the month. May be the last of more than one occurrence.
– Below zero temperature or negative departure from normal.
‡ ≥ 70° at Alaskan stations.
+ Also on an earlier date, or dates.
X Heavy fog restricts visibility to ¼ mile or less.
T In the Hourly Precipitation table and in columns 9, 10, and 11 indicates an amount too small to measure.
The season for degree days begins with July for heating and with January for cooling.
Data in columns 6, 12, 13, 14, and 15 are based on 8 observations per day at 3-hour intervals.
Wind directions are those from which the wind blows. Resultant wind is the vector sum of wind directions and speeds divided by the number of observations. Figures for directions are tens of degrees from true North; i.e., 09 = East, 18 = South, 27 = West, 36 = North, and 00 = Calm. When directions are in tens of degrees in Col. 17, entries in Col. 16 are fastest observed 1-minute speeds. If the / appears in Col. 17, speeds are gusts.

Any errors detected will be corrected and changes in summary data will be annotated in the annual summary.

Subscription Price: Local Climatological Data $1.00 per year including annual Summary if published. Single copy: 10 cents for monthly Summary; 15 cents for annual Summary. Checks or money orders should be made payable and remittances and correspondence should be sent to the Superintendent of Documents, U. S. Government Printing Office, Washington, D. C. 20402.

I certify that this is an official publication of the Environmental Science Services Administration, and is compiled from records on file at the National Weather Records Center, Asheville, North Carolina 28801.

William H. Haggard

Director, National Weather Records Center

SUMMARY BY HOURS

Hour (Local Time)	AVERAGES Sky cover (in tenths)	Station pressure (In.)	Dry bulb (°F)	Wet bulb (°F)	Rel. hum. %	Dew point (°F)	Wind speed (m.p.h.)	Resultant wind Direction	Speed (m.p.h.)

USCOMM—ESSA—ASHEVILLE 300

LOCAL CLIMATOLOGICAL DATA

U. S. DEPARTMENT OF COMMERCE - MAURICE H. STANS, Secretary

ENVIRONMENTAL SCIENCE SERVICES ADMINISTRATION -- ENVIRONMENTAL DATA SERVICE

SAN FRANCISCO, CALIFORNIA
FEDERAL OFFICE BLDG.
MAY 1969

Latitude 37° 47′ N Longitude 122° 25′ W Elevation (ground) 52 ft. Standard time used: PACIFIC

Date	Temperature (°F) Maximum	Minimum	Average	Departure from normal	Average dew point	Degree days (Base 65°) Heating	Cooling	Weather types shown by code 1-9 on dates of occurrence (Fog, Heavy Fog, Thunderstorm, Sleet, Hail, Glaze, Duststorm, Smoke, Haze, Blowing Snow)	Snow, Sleet, or Ice on ground at 08AM (In.)	Precipitation Water equivalent (In.)	Snow, sleet (In.)	Avg. station pressure (In.) Elev. 155 feet m.s.l.	Wind Resultant direction	Resultant speed (m.p.h.)	Average speed (m.p.h.)	Fastest mile Speed (m.p.h.)	Direction	Sunshine Hours and tenths	Percent of possible	Sky cover (Tenths) Sunrise to sunset	Midnight to midnight	Date
1	2	3	4	5	6	7A	7B	8	9	10	11	12	13	14	15	16	17	18	19	20	21	22
1	59	47	53	-3		12	0	DATA ARE NOT ENTERED IN THIS COLUMN BECAUSE RECORDS OF WEATHER TYPES MAY BE INCOMPLETE FOR PART OF THE DAY	0	0	0					21	W	13.8	100			1
2	60	49	55	-1		10	0		0	0	0					20	W	13.2	95			2
3	55	48	52	-4		13	0		0	0	0					33	SW	13.8	100			3
4	64	47*	56	0		9	0		0	0	0					20	W	13.9	100			4
5	80*	52	66	10		0	1		0	0	0					17	SW	13.9	100			5
6	67	50	59	3		6	0		0	0	0					19	SW	13.9	100			6
7	61	53	57	1		8	0		0	0	0					20	SW	12.0	86			7
8	62	53	58	.2		7	0		0	0	0					17	SW	6.9	49			8
9	65	52	59	3		6	0		0	0	0					24	W	14.0	100			9
10	55	50	53	-3		12	0		0	0	0					24	SW	12.6	90			10
11	55	49	52	-5		13	0		0	0	0					20	W	9.4	67			11
12	57	51	54	-3		11	0		0	T	0					16	W	2.8	20			12
13	60	54	57	0		8	0		0	0	0					17	SW	6.2	44			13
14	62	53	58	1		7	0		0	0	0					20	W	9.1	64			14
15	59	50	55	-2		10	0		0	0	0					26	SW	10.9	77			15
16	65	49	57	0		8	0		0	0	0					21	W	11.8	83			16
17	64	48	56	-1		9	0		0	T	0					25	W	12.3	86			17
18	61	53	57	-1		8	0		0	0	0					22	W	8.7	61			18
19	67	52	60	2		5	0		0	0	0					23	SW	14.3	100			19
20	60	50	55	-3		10	0		0	0	0					25	W	10.2	71			20
21	57	50	54	-4		11	0		0	0	0					21	W	3.3	23			21
22	59	51	55	-4		10	0		0	0	0					20	W	3.7	26			22
23	56	50	53	-6		12	0		0	0	0					18	W	3.9	27			23
24	64	52	58	-1		7	0		0	0	0					17	W	8.2	56			24
25	65	50	58	-1		7	0		0	0	0					16	SW	13.5	93			25
26	67	55	61	2		4	0		0	T	0					17	W	5.5	38			26
27	64	54	59	0		6	0		0	0	0					24	SW	12.7	87			27
28	68	53	61	2		4	0		0	0	0					19	W	14.5	100			28
29	72	55	64	5		1	0		0	0	0					18	W	14.6	100			29
30	71	55	63	4		2	0		0	0	0					23	W	14.6	100			30
31	64	53	59	0		6	0		0	0	0					22	SW	14.6	100			31
	Sum	Sum				Total	Total			Total	Total	For the month:						Total	%	Sum	Sum	
	1945	1588				242	1	Number of days		T	0					33	SW	322.8	for			
	Avg.	Avg.	Avg.	Dep.	Avg.	Dep.	Dep.	Precipitation		Dep.						Date: 03		Possible	month	Avg.	Avg.	
	62.7	51.2	57.0	-0.4		3		≥ .01 inch	0	-0.63								440.6	76			

Season to date			
	Total	Total	
	3078	6	
	Dep.	Dep.	
	257		

Number of days			
Maximum Temp.		Minimum Temp.	
≥ 32°	≤ 90° ‡	≤ 32°	≤ 0°
0	0	0	0

Snow, sleet ≥ 1.0 inch	0
Thunderstorms	
Heavy fog	X

Greatest in 24 hours and dates		
Precipitation	Snow, Sleet	
T	26+	0

Greatest depth on ground of snow, sleet or ice and date
0

HOURLY PRECIPITATION (Water equivalent in inches) — ENTRY OF TRACE AMOUNTS MAY BE INCOMPLETE.

Date	A. M. Hour ending at 1	2	3	4	5	6	7	8	9	10	11	12	P. M. Hour ending at 1	2	3	4	5	6	7	8	9	10	11	12	Date
1																									1
2																									2
3																									3
4																									4
5																									5
6																									6
7																									7
8																									8
9																									9
10																									10
11																									11
12						T	T	T																	12
13																									13
14																									14
15																									15
16																									16
17																				T	T	T	T		17
18																									18
19																									19
20																									20
21																									21
22																									22
23																									23
24																									24
25																									25
26						T	T	T												T	T	T			26
27																									27
28																									28
29																									29
30																									30
31																									31

* Extreme temperatures for the month. May be the last of more than one occurrence.
– Below zero temperature or negative departure from normal.
‡ ≥ 70° at Alaskan stations.
+ Also on an earlier date, or dates.
X Heavy fog restricts visibility to ¼ mile or less.
T In the Hourly Precipitation table and in columns 9, 10, and 11 indicates an amount too small to measure.

The season for degree days begins with July for heating and with January for cooling.
Data in columns 6, 12, 13, 14, and 15 are based on 8 observations per day at 3-hour intervals.
Wind directions are those from which the wind blows. Resultant wind is the vector sum of wind directions and speeds divided by the number of observations. Figures for directions are tens of degrees from true North; i.e., 09 = East, 18 = South, 27 = West, 36 = North, and 00 = Calm. When directions are in tens of degrees in Col. 17, entries in Col. 16 are fastest observed 1-minute speeds. If the / appears in Col. 17, speeds are gusts.

Any errors detected will be corrected and changes in summary data will be annotated in the annual summary.

Subscription Price: Local Climatological Data $1.00 per year including annual Summary if published. Single copy: 10 cents for monthly Summary; 15 cents for annual Summary. Checks or money orders should be made payable and remittances and correspondence should be sent to the Superintendent of Documents, U. S. Government Printing Office, Washington, D. C. 20402.

I certify that this is an official publication of the Environmental Science Services Administration, and is compiled from records on file at the National Weather Records Center, Asheville, North Carolina 28801.

William H. Haggard

Director, National Weather Records Center

SUMMARY BY HOURS

Hour (Local time)	AVERAGES Sky cover (In tenths)	Station pressure (In.)	Dry bulb (°F)	Wet bulb (°F)	Rel. hum. %	Dew point (°F)	Wind speed (m.p.h.)	Resultant wind Direction	Speed (m.p.h.)

USCOMM—ESSA—ASHEVILLE 300

LOCAL CLIMATOLOGICAL DATA

U. S. DEPARTMENT OF COMMERCE - MAURICE H. STANS, Secretary

ENVIRONMENTAL SCIENCE SERVICES ADMINISTRATION -- ENVIRONMENTAL DATA SERVICE

SAN FRANCISCO, CALIFORNIA
FEDERAL OFFICE BLDG.
JUNE 1969

Latitude 37° 47′ N Longitude 122° 25′ W Elevation (ground) 52 ft. Standard time used: PACIFIC

Date	Temperature (°F) Maximum	Minimum	Average	Departure from normal	Average dew point	Degree days (Base 65°) Heating	Cooling	Weather types shown by code 1-9 on dates of occurrence (Fog, Heavy Fog, Thunderstorm, Sleet, Hail, Glaze, Duststorm, Smoke, Haze, Blowing Snow)	Snow, Sleet, or Ice on ground at 08AM (In.)	Precipitation Water equivalent (In.)	Snow, sleet (In.)	Avg. station pressure (In.) Elev. 155 feet m.s.l.	Wind Resultant direction	Resultant speed (m.p.h.)	Average speed (m.p.h.)	Fastest mile Speed (m.p.h.)	Direction	Sunshine Hours and tenths	Percent of possible	Sky cover (Tenths) Sunrise to sunset	Midnight to midnight	Date
1	2	3	4	5	6	7A	7B	8	9	10	11	12	13	14	15	16	17	18	19	20	21	22
1	65	55	60	0		5	0	DATA ARE NOT ENTERED IN THIS COLUMN BECAUSE RECORDS OF WEATHER TYPES MAY BE INCOMPLETE FOR PART OF THE DAY	0	0	0					19	SW	10.2	69			1
2	64	56	60	0		5	0		0	0	0					20	SW	14.6	100			2
3	61	55	58	-2		7	0		0	T	0					17	SW	5.0	34			3
4	61	55	58	-2		7	0		0	T	0					17	W	3.4	23			4
5	63	56	60	0		5	0		0	0	0					15	SW	6.7	46			5
6	65	55	60	0		5	0		0	0	0					22	W	14.7	100			6
7	60	55	58	-2		7	0		0	0	0					23	W	6.1	42			7
8	56	54	55	-5		10	0		0	.04	0					17	W	0.0	0			8
9	59	55	57	-3		8	0		0	T	0					14	W	0.2	1			9
10	64	55	60	0		5	0		0	.01	0					22	SW	10.3	70			10
11	61	54	58	-2		7	0		0	0	0					18	W	5.0	34			11
12	63	56	60	0		5	0		0	0	0					17	W	4.1	27			12
13	60	54	57	-3		8	0		0	0	0					23	W	2.3	15			13
14	60	54	57	-3		8	0		0	0	0					25	SW	5.5	37			14
15	62	53	58	-1		7	0		0	0	0					23	W	4.3	29			15
16	60	54	57	-2		8	0		0	0	0					18	W	4.8	33			16
17	67	57	62	3		3	0		0	0	0					18	SW	11.7	79			17
18	65	57	61	2		4	0		0	0	0					16	W	6.0	40			18
19	63	56	60	1		5	0		0	0	0					20	W	4.4	30			19
20	61	56	59	0		6	0		0	T	0					17	NW	2.2	15			20
21	59	54	57	-2		8	0		0	0	0					31	W	5.6	38			21
22	59	54	57	-2		8	0		0	0	0					20	W	5.6	38			22
23	65	54	60	1		5	0		0	0	0					28	W	14.8	100			23
24	66	53	60	1		5	0		0	0	0					26	W	14.8	100			24
25	62	54	58	-1		7	0		0	0	0					26	SW	14.6	99			25
26	63	53	58	-1		7	0		0	0	0					26	W	14.8	100			26
27	65	52	59	1		6	0		0	0	0					26	W	14.8	100			27
28	68	54	61	3		4	0		0	0	0					22	W	14.8	100			28
29	77*	55	66	8		0	1		0	0	0					22	W	14.8	100			29
30	59	51*	55	-3		10	0		0	0	0					27	W	11.7	79			30
Sum	1883	Sum	1636			Total	185	Total	1	Total	.05	Total	0	For the month:		31	W	Total 247.8	% for month	Sum	Sum	
Avg.	62.8	Avg.	54.5	Avg.	58.7	Dep.	5	Dep.		Dep.	-0.09					Date: 21		Possible 442.1	56	Avg.	Avg.	

Number of days				Season to date	
Maximum Temp. ≥ 32°	Maximum Temp. ≤ 90° ‡	Minimum Temp. ≤ 32°	Minimum Temp. ≤ 0°	Total 3253	Total 7
0	0	0	0	Dep. 262	Dep.

Number of days Precipitation ≥ .01 inch	2
Snow, sleet ≥ 1.0 inch	0
Thunderstorms	
Heavy fog	X

Greatest in 24 hours and dates Precipitation		Snow, Sleet		Greatest depth on ground of snow, sleet or ice and date	
.04	8	0		0	

HOURLY PRECIPITATION (Water equivalent in inches) — ENTRIES OF TRACE MAY BE INCOMPLETE.

Date	A. M. Hour ending at 1	2	3	4	5	6	7	8	9	10	11	12	P. M. Hour ending at 1	2	3	4	5	6	7	8	9	10	11	12	Date
1																									1
2																									2
3						T	T	T																	3
4						T	T	T																	4
5																									5
6																									6
7																									7
8											.01	T	.01	T	.01	.01									8
9						T	T	T	T	T	T	T	T	T	T	T									9
10						.01																			10
11																									11
12																									12
13																									13
14																									14
15																									15
16																									16
17																									17
18																									18
19																									19
20								T	T	T	T	T	T	T	T										20
21																									21
22																									22
23																									23
24																									24
25																									25
26																									26
27																									27
28																									28
29																									29
30																									30

* Extreme temperatures for the month. May be the last of more than one occurrence.
– Below zero temperature or negative departure from normal.
‡ 70° at Alaskan stations.
+ Also on an earlier date, or dates.
X Heavy fog restricts visibility to ¼ mile or less.
T In the Hourly Precipitation table and in columns 9, 10, and 11 indicates an amount too small to measure.

The season for degree days begins with July for heating and with January for cooling.
Data in columns 6, 12, 13, 14, and 15 are based on 8 observations per day at 3-hour intervals.
Wind directions are those from which the wind blows. Resultant wind is the vector sum of wind directions and speeds divided by the number of observations. Figures for directions are tens of degrees from true North; i.e., 09 = East, 18 = South, 27 = West, 36 = North, and 00 = Calm. When directions are in tens of degrees in Col. 17, entries in Col. 16 are fastest observed 1-minute speeds. If the / appears in Col. 17, speeds are gusts.

Any errors detected will be corrected and changes in summary data will be annotated in the annual summary.

Subscription Price: Local Climatological Data $1.00 per year including annual Summary if published. Single copy: 10 cents for monthly Summary; 15 cents for annual Summary. Checks or money orders should be made payable and remittances and correspondence should be sent to the Superintendent of Documents, U. S. Government Printing Office, Washington, D. C. 20402.

I certify that this is an official publication of the Environmental Science Services Administration, and is compiled from records on file at the National Weather Records Center, Asheville, North Carolina 28801.

William H. Haggard

Director, National Weather Records Center

SUMMARY BY HOURS

Hour (Local time)	AVERAGES Sky cover (In tenths)	Station pressure (In.)	Dry bulb (°F)	Wet bulb (°F)	Rel. hum %	Dew point (°F)	Wind speed (m.p.h.)	Resultant wind Direction	Speed (m.p.h.)

USCOMM—ESSA—ASHEVILLE 300

LOCAL CLIMATOLOGICAL DATA

U. S. DEPARTMENT OF COMMERCE - MAURICE H. STANS, Secretary

ENVIRONMENTAL SCIENCE SERVICES ADMINISTRATION -- ENVIRONMENTAL DATA SERVICE

SAN FRANCISCO, CALIFORNIA
FEDERAL OFFICE BLDG.
JULY 1969

Latitude 37° 47′ N Longitude 122° 25′ W Elevation (ground) 52 ft. Standard time used: PACIFIC

Date	Temperature (°F) Maximum	Minimum	Average	Departure from normal	Average dew point	Degree days (Base 65°) Heating	Cooling	Weather types shown by code 1-9 on dates of occurrence (Fog, Heavy Fog, Thunderstorm, Sleet, Hail, Glaze, Duststorm, Smoke, Haze, Blowing Snow)	Snow, Sleet, or Ice on ground at 08AM (In.)	Precipitation Water equivalent (In.)	Snow, sleet (In.)	Avg. station pressure (In.) Elev. 155 feet m.s.l.	Wind Resultant direction	Resultant speed (m.p.h.)	Average speed (m.p.h.)	Fastest mile Speed (m.p.h.)	Direction	Sunshine Hours and tenths	Percent of possible	Sky cover (Tenths) Sunrise to sunset	Midnight to midnight	Date
1	2	3	4	5	6	7A	7B	8	9	10	11	12	13	14	15	16	17	18	19	20	21	22
1	60	50	55	-3		10	0	DATA ARE NOT ENTERED IN THIS COLUMN BECAUSE RECORDS OF WEATHER TYPES MAY BE INCOMPLETE FOR PART OF THE DAY	0	0	0					18	W	6.3	43			1
2	64	51	58	0		7	0		0	0	0					23	W	13.3	90			2
3	73	51	62	4		3	0		0	0	0					21	W	14.7	100			3
4	67	52	60	2		5	0		0	0	0					20	W	14.7	100			4
5	63	51	57	-2		8	0		0	0	0					29	W	14.7	100			5
6	61	51	56	-3		9	0		0	0	0					17	W	14.7	100			6
7	64	51	58	-1		7	0		0	0	0					20	W	10.8	74			7
8	64	51	58	-1		7	0		0	0	0					21	SW	8.7	59			8
9	63	50	57	-2		8	0		0	0	0					22	SW	8.3	56			9
10	62	51	57	-2		8	0		0	0	0					23	W	8.7	60			10
11	61	51	56	-3		9	0		0	0	0					25	W	12.9	88			11
12	65	52	59	0		6	0		0	0	0					21	SW	14.0	96			12
13	65	53	59	0		6	0		0	0	0					18	W	14.6	100			13
14	60	53	57	-2		8	0		0	0	0					23	W	14.6	100			14
15	63	53	58	-1		7	0		0	0	0					18	SW	14.5	100			15
16	71	52	62	3		3	0		0	0	0					23	W	14.5	100			16
17	74*	55	65	6		0	0		0	0	0					19	W	14.5	100			17
18	64	52	58	-1		7	0		0	0	0					19	W	12.0	83			18
19	66	49*	58	-1		7	0		0	0	0					22	W	13.0	90			19
20	60	51	56	-3		9	0		0	0	0					22	W	12.8	89			20
21	59	51	55	-4		10	0		0	0	0					20	W	10.9	75			21
22	61	53	57	-3		8	0		0	0	0					20	W	10.8	75			22
23	65	55	60	0		5	0		0	0	0					19	W	8.4	58			23
24	67	58	63	3		2	0		0	0	0					17	W	9.3	65			24
25	64	56	60	0		5	0		0	T	0					23	W	10.3	72			25
26	59	52	56	-4		9	0		0	0	0					25	W	7.1	50			26
27	57	51	54	-6		11	0		0	0	0					22	W	6.4	45			27
28	59	52	56	-4		9	0		0	0	0					25	SW	5.7	40			28
29	58	51	55	-5		10	0		0	0	0					23	SW	6.0	42			29
30	59	51	55	-5		10	0		0	0	0					21	SW	5.6	40			30
31	64	50	57	-3		8	0		0	0	0					22	W	11.7	83			31
	Sum 1962	Sum 1610				Total 221	Total 0	Number of days		Total T	Total 0	For the month:				29	W	Total 344.5	% for month	Sum	Sum	
	Avg. 63.3	Avg. 51.9	Avg. 57.6	Dep. -1.2	Avg.	Dep. 29	Dep.	Precipitation ≥ .01 inch	0	Dep. -0.01						Date: 05		Possible 448.9	77	Avg.	Avg.	
						Season to date Total 221	Total 7	Snow, sleet ≥ 1.0 inch	0													
	Number of days: Maximum Temp. ≤ 32°	≥ 90°‡	Minimum Temp. ≤ 32°	≤ 0°		Dep. 29	Dep.	Thunderstorms		Greatest in 24 hours and dates: Precipitation T	25	Snow, Sleet 0				Greatest depth on ground of snow, sleet or ice and date 0						
	0	0	0	0				Heavy fog X														

HOURLY PRECIPITATION (Water equivalent in inches)—ENTRY OF TRACE AMOUNTS MAY BE INCOMPLETE.

Date	A. M. Hour ending at 1	2	3	4	5	6	7	8	9	10	11	12	P. M. Hour ending at 1	2	3	4	5	6	7	8	9	10	11	12	Date
1																									1
2																									2
3																									3
4																									4
5																									5
6																									6
7																									7
8																									8
9																									9
10																									10
11																									11
12																									12
13																									13
14																									14
15																									15
16																									16
17																									17
18																									18
19																									19
20																									20
21																									21
22																									22
23																									23
24																									24
25							T	T	T																25
26																									26
27																									27
28																									28
29																									29
30																									30
31																									31

* Extreme temperatures for the month. May be the last of more than one occurrence.
– Below zero temperature or negative departure from normal.
‡ ≥ 70° at Alaskan stations.
+ Also on an earlier date, or dates.
X Heavy fog restricts visibility to ¼ mile or less.
T In the Hourly Precipitation table and in columns 9, 10, and 11 indicates an amount too small to measure.

The season for degree days begins with July for heating and with January for cooling.
Data in columns 6, 12, 13, 14, and 15 are based on 8 observations per day at 3-hour intervals.
Wind directions are those from which the wind blows. Resultant wind is the vector sum of wind directions and speeds divided by the number of observations. Figures for directions are tens of degrees from true North; i.e., 09 = East, 18 = South, 27 = West, 36 = North, and 00 = Calm. When directions are in tens of degrees in Col. 17, entries in Col. 16 are fastest observed 1-minute speeds. If the / appears in Col. 17, speeds are gusts.

Any errors detected will be corrected and changes in summary data will be annotated in the annual summary.

Subscription Price: Local Climatological Data $1.00 per year including annual Summary if published. Single copy: 10 cents for monthly Summary; 15 cents for annual Summary. Checks or money orders should be made payable and remittances and correspondence should be sent to the Superintendent of Documents, U. S. Government Printing Office, Washington, D. C. 20402.

I certify that this is an official publication of the Environmental Science Services Administration, and is compiled from records on file at the National Weather Records Center, Asheville, North Carolina 28801.

William H. Haggard

Director, National Weather Records Center

SUMMARY BY HOURS

AVERAGES Hour (Local time)	Sky cover (Tn tenths)	Station pressure (In.)	Dry bulb (°F)	Wet bulb (°F)	Rel. hum. %	Dew point (°F)	Wind speed (m.p.h.)	Resultant wind Direction	Speed (m.p.h.)

USCOMM—ESSA—ASHEVILLE 300

LOCAL CLIMATOLOGICAL DATA

U. S. DEPARTMENT OF COMMERCE - MAURICE H. STANS, Secretary

ENVIRONMENTAL SCIENCE SERVICES ADMINISTRATION -- ENVIRONMENTAL DATA SERVICE

SAN FRANCISCO, CALIFORNIA
FEDERAL OFFICE BLDG.
AUGUST 1969

Latitude 37° 47′ N Longitude 122° 25′ W Elevation (ground) 52 ft. Standard time used: PACIFIC

Date	Temperature (°F) Maximum	Minimum	Average	Departure from normal	Average dew point	Degree days (Base 65°) Heating	Cooling	Weather types shown by code 1-9 on dates of occurrence 123 456 789 Fog, Heavy Fog, Thunderstorm, Sleet, Hail, Glaze, Duststorm, Smoke, Haze, Blowing Snow	Snow, Sleet, or Ice on ground at 08AM (In.)	Precipitation Water equivalent (In.)	Snow, sleet (In.)	Avg. station pressure (In.) Elev. 155 feet m.s.l.	Wind Resultant direction	Resultant speed (m.p.h.)	Average speed (m.p.h.)	Fastest mile # Speed (m.p.h.)	Direction	Sunshine Hours and tenths	Percent of possible	Sky cover (Tenths) Sunrise to sunset	Midnight to midnight	Date
1	2	3	4	5	6	7A	7B	8	9	10	11	12	13	14	15	16	17	18	19	20	21	22
1	59	51	55	-5		10	0	DATA ARE NOT ENTERED IN THIS COLUMN BECAUSE RECORDS OF WEATHER TYPES MAY BE INCOMPLETE FOR PART OF THE DAY	0	0	0					24	W	12.1	85			1
2	73	51	62	2		3	0		0	0	0					20	W	14.1	100			2
3	72	55	64	4		1	0		0	0	0					23	W	14.1	100			3
4	73	56	65	5		0	0		0	0	0					22	W	14.0	100			4
5	71	55	63	3		2	0		0	0	0					22	SW	14.0	100			5
6	63	53	58	-2		7	0		0	0	0					22	W	13.9	100			6
7	66	52	59	-1		6	0		0	0	0					18	W	13.9	100			7
8	65	52	59	-1		6	0		0	0	0					24	W	13.6	98			8
9	63	49	56	-4		9	0		0	0	0					23	W	11.7	85			9
10	63	53	58	-2		7	0		0	0	0					22	W	13.0	94			10
11	66	53	60	0		5	0		0	0	0					21	W	13.8	100			11
12	73	54	64	4		1	0		0	0	0					24	W	13.7	100			12
13	62	50	56	-4		9	0		0	0	0					27	W	12.7	93			13
14	60	48+	54	-6		11	0		0	0	0					23	W	10.2	74			14
15	63	52	58	-2		7	0		0	0	0					24	W	13.6	100			15
16	66	52	59	-1		6	0		0	0	0					24	W	12.0	88			16
17	60	52	56	-4		9	0		0	0	0							8.0	59			17
18	58	52	55	-5		10	0		0	0	0					22	W	3.9	28			18
19	62	52	57	-3		8	0		0	T	0					18	SW	9.5	70			19
20	67	52	60	0		5	0		0	0	0					21	W	12.5	93			20
21	71	53	62	2		3	0		0	0	0					26	W	13.4	100			21
22	59	51	55	-5		10	0		0	0	0					27	W	10.8	80			22
23	63	53	58	-2		7	0		0	0	0					23	SW	7.5	56			23
24	65	55	60	0		5	0		0	0	0					25	NW	13.3	100			24
25	73	55	64	4		1	0		0	0	0					25	W	13.3	100			25
26	68	54	61	1		4	0		0	0	0					23	W	12.0	91			26
27	68	52	60	0		5	0		0	0	0					22	W	13.2	100			27
28	65	54	60	0		5	0		0	0	0					26	W	13.2	100			28
29	74*	53	64	4		1	0		0	0	0					23	W	13.1	100			29
30	67	54	61	1		4	0		0	0	0					21	W	13.1	100			30
31	70	52	61	1		4	0		0	0	0					23	W	13.0	100			31
Sum	Sum					Total	Total			Total	Total	For the month:						Total	%	Sum	Sum	
2048	1630					171	0	Number of days		7	0					27	W	380.2	for			
Avg.	Avg.	Avg.	Dep.	Avg.		Dep.	Dep.	Precipitation		Dep.						Date:	22+	Possible	month	Avg	Avg.	
66.1	52.6	59.4	0.0			-3		≥ .01 inch	0	-0.04								421.2	90			
						Season to date		Snow, sleet														
Number of days						Total	Total	≥ 1.0 inch	0	Greatest in 24 hours and dates						Greatest depth on ground of snow, sleet or ice and date						
Maximum Temp.		Minimum Temp.				392	7	Thunderstorms		Precipitation		Snow, Sleet										
≥ 32°	≤ 90° ‡	≤ 32°	≤ 0°			Dep.	Dep.	Heavy fog X		T	19	0				0						
0	0	0	0			26																

NO DATA FOR 17TH DAY.

HOURLY PRECIPITATION (Water equivalent in inches—TRACE AMOUNT ENTRIES MAY BE INCOMPLETE.

Date	A. M. Hour ending at 1	2	3	4	5	6	7	8	9	10	11	12	P. M. Hour ending at 1	2	3	4	5	6	7	8	9	10	11	12	Date
19						T	T	T																	19

* Extreme temperatures for the month. May be the last of more than one occurrence.
– Below zero temperature or negative departure from normal.
‡ ≥ 70° at Alaskan stations.
\+ Also on an earlier date, or dates.
X Heavy fog restricts visibility to ¼ mile or less.
T In the Hourly Precipitation table and in columns 9, 10, and 11 indicates an amount too small to measure.

The season for degree days begins with July for heating and with January for cooling.
Data in columns 6, 12, 13, 14, and 15 are based on 8 observations per day at 3-hour intervals.
Wind directions are those from which the wind blows. Resultant wind is the vector sum of wind directions and speeds divided by the number of observations. Figures for directions are tens of degrees from true North; i.e., 09 = East, 18 = South, 27 = West, 36 = North, and 00 = Calm. When directions are in tens of degrees in Col. 17, entries in Col. 16 are fastest observed 1-minute speeds. If the / appears in Col. 17, speeds are gusts.

Any errors detected will be corrected and changes in summary data will be annotated in the annual summary.

Subscription Price: Local Climatological Data $1.00 per year including annual Summary if published. Single copy: 10 cents for monthly Summary; 15 cents for annual Summary. Checks or money orders should be made payable and remittances and correspondence should be sent to the Superintendent of Documents, U. S. Government Printing Office, Washington, D. C. 20402.

I certify that this is an official publication of the Environmental Science Services Administration, and is compiled from records on file at the National Weather Records Center, Asheville, North Carolina 28801.

William H. Haggard

Director, National Weather Records Center

SUMMARY BY HOURS

Hour (L.S.T. time)	AVERAGES Sky cover (tin tenths)	Station pressure (In.)	Dry bulb (°F)	Wet bulb (°F)	Rel. hum %	Dew point (°F)	Wind speed (m.p.h.)	Resultant wind Direction	Speed (m.p.h.)

USCOMM—ESSA—ASHEVILLE 300

LOCAL CLIMATOLOGICAL DATA

U. S. DEPARTMENT OF COMMERCE - MAURICE H. STANS, Secretary

ENVIRONMENTAL SCIENCE SERVICES ADMINISTRATION

ENVIRONMENTAL DATA SERVICE

SAN FRANCISCO, CALIFORNIA
FEDERAL OFFICE BLDG.
SEPTEMBER 1969

Latitude 37° 47′ N Longitude 122° 25′ W Elevation (ground) 52 ft. Standard time used: PACIFIC

Date	Temperature (°F) Maximum	Minimum	Average	Departure from normal	Average dew point	Degree days (Base 65°) Heating	Cooling	Weather types shown by code 1-9 on dates of occurrence (Fog, Heavy Fog, Thunderstorm, Sleet, Hail, Glaze, Duststorm, Smoke, Haze, Blowing Snow)	Snow, Sleet, or Ice on ground at 08AM (In.)	Precipitation Water equivalent (In.)	Snow, sleet (In.)	Avg. station pressure (In.) Elev. 155 feet m.s.l.	Wind Resultant direction	Resultant speed (m.p.h.)	Average speed (m.p.h.)	Fastest mile Speed (m.p.h.)	Direction	Sunshine Hours and tenths	Percent of possible	Sky cover (Tenths) Sunrise to sunset	Midnight to midnight	Date
1	2	3	4	5	6	7A	7B	8	9	10	11	12	13	14	15	16	17	18	19	20	21	22
1	65	52	59	-1		6	0	DATA ARE NOT ENTERED IN THIS COLUMN BECAUSE RECORDS OF WEATHER TYPES MAY BE INCOMPLETE FOR PART OF THE DAY	0	0	0					21	W	13.0	100			1
2	63	51*	57	-3		8	0		0	0	0					25	W	13.0	100			2
3	61	52	57	-3		8	0		0	0	0					22	SW	12.0	93			3
4	60	53	57	-4		8	0		0	0	0					24	W	8.6	66			4
5	61	53	57	-4		8	0		0	0	0					23	W	10.3	80			5
6	78	54	66	5		0	1		0	.01	0					24	W	10.4	82			6
7	80	62	71	9		0	6		0	0	0					22	W	11.9	93			7
8	74	56	65	3		0	0		0	0	0					24	NW	12.7	100			8
9	63	55	59	-3		6	0		0	0	0					21	SW	10.3	81			9
10	67	54	61	-1		4	0		0	0	0					21	W	12.5	99			10
11	60	53	57	-5		8	0		0	0	0					22	SW	5.9	47			11
12	59	52	56	-6		9	0		0	0	0					19	W	4.2	34			12
13	62	53	58	-4		7	0		0	0	0					21	W	6.6	53			13
14	60	54	57	-5		8	0		0	0	0					21	SW	8.0	64			14
15	62	53	58	-4		7	0		0	0	0					17	W	12.1	97			15
16	62	52	57	-6		8	0		0	0	0					23	W	9.6	78			16
17	65	56	61	-2		4	0		0	T	0					21	W	3.6	29			17
18	70	56	63	0		2	0		0	T	0					16	W	4.5	36			18
19	63	56	60	-3		5	0		0	T	0					19	W	5.4	44			19
20	66	56	61	-2		4	0		0	0	0					17	W	3.0	24			20
21	70	56	63	0		2	0		0	0	0					22	W	12.2	100			21
22	72	54	63	0		2	0		0	0	0					21	W	12.2	100			22
23	68	56	62	-1		3	0		0	0	0					24	W	12.1	100			23
24	69	55	62	-1		3	0		0	0	0					20	W	8.6	71			24
25	82*	59	71	8		0	6		0	0	0					17	W	11.9	99			25
26	64	57	61	-2		4	0		0	0	0					26	W	9.8	82			26
27	63	57	60	-3		5	0		0	0	0					17	W	7.4	61			27
28	75	57	66	3		0	1		0	0	0					20	W	10.3	86			28
29	70	58	64	1		1	0		0	0	0					22	W	10.9	92			29
30	68	57	63	0		2	0		0	0	0					20	SW	11.9	100			30
	Sum 2002	Sum 1649				Total 132	Total 14	Number of days		Total .01	Total 0	For the month:				26	W	Total 284.9	% for month	Sum	Sum	
	Avg. 66.7	Avg. 55.0	Avg. 60.9	Dep. -1.1	Avg.	Dep. 30	Dep.	Precipitation ≥ .01 inch 1		Dep. -0.21						Date: 26		Possible 372.7	76	Avg.	Avg.	

Number of days				Season to date Total	Total
Maximum Temp.		Minimum Temp.		524	21
≥ 32°	≤ 90° ‡	≤ 32°	≤ 0°	Dep.	Dep.
0	0	0	0	56	

Snow, sleet ≤ 1.0 inch	0	Greatest in 24 hours and dates: Precipitation .01	Snow, Sleet 6
Thunderstorms			
Heavy fog X			

Greatest depth on ground of snow, sleet or ice and date: 0

HOURLY PRECIPITATION (Water equivalent in inches)—ENTRIES OF TRACE AMOUNTS MAY BE INCOMPLETE

Date	A. M. Hour ending at 1	2	3	4	5	6	7	8	9	10	11	12	P. M. Hour ending at 1	2	3	4	5	6	7	8	9	10	11	12	Date
1																									1
2																									2
3																									3
4																									4
5																									5
6																	.01								6
7																									7
8																									8
9																									9
10																									10
11																									11
12																									12
13																									13
14																									14
15																									15
16																									16
17																				T	T	T			17
18														T	T	T									18
19																T	T								19
20																									20
21																									21
22																									22
23																									23
24																									24
25																									25
26																									26
27																									27
28																									28
29																									29
30																									30

* Extreme temperatures for the month. May be the last of more than one occurrence.
– Below zero temperature or negative departure from normal.
‡ ≥ 70° at Alaskan stations.
+ Also on an earlier date, or dates.
X Heavy fog restricts visibility to ¼ mile or less.
T In the Hourly Precipitation table and in columns 9, 10, and 11 indicates an amount too small to measure.

The season for degree days begins with July for heating and with January for cooling.
Data in columns 6, 12, 13, 14, and 15 are based on 8 observations per day at 3-hour intervals.
Wind directions are those from which the wind blows. Resultant wind is the vector sum of wind directions and speeds divided by the number of observations. Figures for directions are tens of degrees from true North; i.e., 09 = East, 18 = South, 27 = West, 36 = North, and 00 = Calm. When directions are in tens of degrees in Col. 17, entries in Col. 16 are fastest observed 1-minute speeds. If the / appears in Col. 17, speeds are gusts.

Any errors detected will be corrected and changes in summary data will be annotated in the annual summary.

Subscription Price: Local Climatological Data $1.00 per year including annual Summary if published. Single copy: 10 cents for monthly Summary; 15 cents for annual Summary. Checks or money orders should be made payable and remittances and correspondence should be sent to the Superintendent of Documents, U. S. Government Printing Office, Washington, D. C. 20402.

I certify that this is an official publication of the Environmental Science Services Administration, and is compiled from records on file at the National Weather Records Center, Asheville, North Carolina 28801.

William S. Hoggard
Director, National Weather Records Center

SUMMARY BY HOURS

Hour (Local time)	AVERAGES Sky cover (In tenths)	Station pressure (In.)	Dry bulb (°F)	Wet bulb (°F)	Rel. hum. %	Dew point (°F)	Wind speed (m.p.h.)	Resultant wind Direction	Speed (m.p.h.)

USCOMM—ESSA—ASHEVILLE 300

LOCAL CLIMATOLOGICAL DATA

U.S. DEPARTMENT OF COMMERCE
MAURICE H. STANS, Secretary
ENVIRONMENTAL SCIENCE SERVICES ADMINISTRATION
ENVIRONMENTAL DATA SERVICE

SAN FRANCISCO, CALIFORNIA
FEDERAL OFFICE BLDG.
OCTOBER 1969

Latitude 37° 47′ N Longitude 122° 25′ W Elevation (ground) 52 ft. Standard time used: PACIFIC

Date	Temperature (°F) Maximum	Minimum	Average	Departure from normal	Average dew point	Degree days (Base 65°) Heating	Cooling	Weather types shown by code 1-9 on dates of occurrence (Fog, Heavy Fog, Thunderstorm, Sleet, Hail, Glaze, Duststorm, Smoke, Haze, Blowing Snow)	Snow, Sleet, or Ice on ground at 08AM (In.)	Precipitation Water equivalent (In.)	Snow, sleet (In.)	Avg. station pressure (In.) Elev. 155 feet m.s.l.	Wind Resultant direction	Resultant speed (m.p.h.)	Average speed (m.p.h.)	Fastest mile Speed (m.p.h.)	Direction	Sunshine Hours and tenths	Percent of possible	Sky cover (Tenths) Sunrise to sunset	Midnight to midnight	Date
1	2	3	4	5	6	7A	7B	8	9	10	11	12	13	14	15	16	17	18	19	20	21	22
1	68	56	62	-1		3	0	DATA ARE NOT ENTERED IN THIS COLUMN BECAUSE RECORDS OF WEATHER TYPES MAY BE INCOMPLETE	0	0	0					24	W	11.8	100			1
2	67	54	61	-2		4	0		0	0	0					17	W	11.8	100			2
3	73	58	66	3		0	1		0	0	0					22	NW	11.7	100			3
4	75	60	68	5		0	3		0	0	0					16	NE	11.6	99			4
5	78	58	68	5		0	3		0	0	0					9	W	11.6	100			5
6	77	58	68	5		0	3		0	0	0					12	W	11.6	100			6
7	71	56	64	1		1	0		0	0	0					20	W	8.5	73			7
8	65	57	61	-2		4	0		0	.07	0					20	W	5.5	48			8
9	67	56	62	-1		3	0		0	0	0					22	W	11.5	100			9
10	68	57	63	1		2	0		0	.13	0					21	NE	6.3	55			10
11	74	60	67	5		0	2		0	0	0					28	NW	11.4	100			11
12	74	53	64	2		1	0		0	0	0					14	W	11.4	100			12
13	62	54	58	-4		7	0		0	0	0					17	SW	0.1	1			13
14	61	56	59	-3		6	0		0	.07	0					13	SE	0.0	0			14
15	63	54	59	-3		6	0		0	2.29	0					17	SW	0.0	0			15
16	65	56	61	-1		4	0		0	.05	0					14	W	4.1	36			16
17	60	54	57	-5		8	0		0	0	0					21	W	11.1	100			17
18	62	52	57	-4		8	0		0	0	0					16	W	11.0	99			18
19	69	52	61	0		4	0		0	0	0					14	W	11.0	99			19
20	71	52	62	1		3	0		0	0	0					12	W	11.1	100			20
21	74	54	64	3		1	0		0	0	0					21	W	11.0	100			21
22	61	54	58	-3		7	0		0	0	0					15	W	0.1	1			22
23	61	56	59	-2		6	0		0	0	0					13	W	0.0	0			23
24	62	54	58	-3		7	0		0	0	0					14	W	2.1	19			24
25	67	52*	60	-1		5	0		0	0	0					15	W	8.6	79			25
26	60	55	58	-3		7	0		0	0	0					14	W	0.0	0			26
27	62	56	59	-1		6	0		0	0	0					17	W	4.3	40			27
28	68	54	61	1		4	0		0	0	0					17	W	10.7	100			28
29	77	54	66	6		0	1		0	0	0					12	W	10.7	100			29
30	77	58	68	8		0	3		0	0	0					13	W	10.7	100			30
31	79*	58	69	9		0	4		0	0	0					10	N	10.6	100			31
Sum	2118	Sum 1718				Total 107	Total 20			Total 2.61	Total 0	For the month:				28	NW	Total 241.9	% for month	Sum	Sum	
Avg.	68.3	Avg. 55.4	Avg. 61.9	Dep. 0.5	Avg.	Dep. -11	Dep.	Number of days Precipitation ≥ .01 inch 5		Dep. 1.72						Date: 11		Possible 347.5	70	Avg.	Avg.	

Number of days Maximum Temp. ≥ 32°	≥ 90° ‡	Minimum Temp. ≤ 32°	≤ 0	Season to date Total / Dep.	Total / Dep.	Snow, sleet ≥ 1.0 inch 0; Thunderstorms; Heavy fog X	Greatest in 24 hours and dates Precipitation 2.25 14-15	Snow, Sleet 0	Greatest depth on ground of snow, sleet or ice and date 0
0	0	0	0	631 / 45	41				

HOURLY PRECIPITATION (Water equivalent in inches)—TRACE AMOUNT ENTRIES MAY BE INCOMPLETE

Date	A. M. Hour ending at 1	2	3	4	5	6	7	8	9	10	11	12	P. M. Hour ending at 1	2	3	4	5	6	7	8	9	10	11	12	Date
1																									1
2																									2
3																									3
4																									4
5																									5
6																									6
7																									7
8					.03	.03	.01																		8
9																									9
10			.02	.04	.01	.03	.02	.01	T																10
11																									11
12																									12
13																									13
14									T	T	T			T	.01	T	T	T	T	T	T	.01	.02	.03	14
15	.02	.05	.05	.04	.08	.07	.27	.24	.35	.47	.05	.01	.02	.16	.14	.25				.01		.01			15
16																					.04	.01			16
17																									17
18																									18
19																									19
20																									20
21																									21
22																									22
23																									23
24																									24
25																									25
26																									26
27																									27
28																									28
29																									29
30																									30
31																									31

* Extreme temperatures for the month. May be the last of more than one occurrence.
– Below zero temperature or negative departure from normal.
‡ ≥ 70° at Alaskan stations.
\+ Also on an earlier date, or dates.
X Heavy fog restricts visibility to ¼ mile or less.
T In the Hourly Precipitation table and in columns 9, 10, and 11 indicates an amount too small to measure.

The season for degree days begins with July for heating and with January for cooling.
Data in columns 6, 12, 13, 14, and 15 are based on 8 observations per day at 3-hour intervals.
Wind directions are those from which the wind blows.
Resultant wind is the vector sum of wind directions and speeds divided by the number of observations.
Figures for directions are tens of degrees from true North; i.e., 09 = East, 18 = South, 27 = West, 36 = North, and 00 = Calm. When directions are in tens of degrees in Col. 17, entries in Col. 16 are fastest observed 1-minute speeds. If the / appears in Col. 17, speeds are gusts.

Any errors detected will be corrected and changes in summary data will be annotated in the annual summary.

Subscription Price: Local Climatological Data $1.00 per year including annual Summary if published. Single copy: 10 cents for monthly Summary; 15 cents for annual Summary. Checks or money orders should be made payable and remittances and correspondence should be sent to the Superintendent of Documents, U. S. Government Printing Office, Washington, D. C. 20402.

I certify that this is an official publication of the Environmental Science Services Administration, and is compiled from records on file at the National Weather Records Center, Asheville, North Carolina 28801.

William H. Haggard
Director, National Weather Records Center

SUMMARY BY HOURS

Hour (Local time)	AVERAGES Sky cover (In tenths)	Station pressure (In.)	Dry bulb (°F)	Wet bulb (°F)	Rel. hum. %	Dew point (°F)	Wind speed (m.p.h.)	Resultant wind Direction	Speed (m.p.h.)

USCOMM—ESSA—ASHEVILLE 300

LOCAL CLIMATOLOGICAL DATA

U.S. DEPARTMENT OF COMMERCE
MAURICE H. STANS, Secretary
ENVIRONMENTAL SCIENCE SERVICES ADMINISTRATION
ENVIRONMENTAL DATA SERVICE

SAN FRANCISCO, CALIFORNIA
FEDERAL OFFICE BLDG.
NOVEMBER 1969

Latitude 37° 47′ N Longitude 122° 25′ W Elevation (ground) 52 ft. Standard time used: PACIFIC

Date	Temperature (°F) Maximum	Minimum	Average	Departure from normal	Average dew point	Degree days (Base 65°) Heating	Cooling	Weather types shown by code 1-9 on dates of occurrence (Fog, Heavy Fog, Thunderstorm, Sleet, Hail, Glaze, Duststorm, Smoke, Haze, Blowing Snow)	Snow, Sleet, or Ice on ground at 06AM (In.)	Precipitation Water equivalent (In.)	Snow, sleet (In.)	Avg. station pressure (In.) Elev. 155 feet m.s.l.	Wind Resultant direction	Resultant speed (m.p.h.)	Average speed (m.p.h.)	Fastest mile Speed (m.p.h.)	Direction	Sunshine Hours and tenths	Percent of possible	Sky cover (Tenths) Sunrise to sunset	Midnight to midnight	Date
1	2	3	4	5	6	7A	7B	8	9	10	11	12	13	14	15	16	17	18	19	20	21	22
1	78*	58	68	8		0	3	DATA ARE NOT ENTERED IN THIS COLUMN BECAUSE RECORDS OF WEATHER TYPES MAY BE INCOMPLETE	0	0	0					11	W	10.6	100			1
2	69	53	61	1		4	0		0	0	0					23	W	10.6	100			2
3	69	51	60	1		5	0		0	0	0					19	SW	6.2	59			3
4	62	52	57	-2		8	0		0	0	0					16	S	2.9	27			4
5	60	53	57	-2		8	0		0	.41	0					18	SW	1.4	13			5
6	60	52	56	-3		9	0		0	.03	0					11	W	5.0	48			6
7	60	52	56	-3		9	0		0	.01	0					19	SE	0.3	3			7
8	66	56	61	2		4	0		0	0	0					20	SE	5.5	53			8
9	70	53	62	3		3	0		0	0	0					13	W	10.3	100			9
10	73	54	64	5		1	0		0	0	0					11	N	10.3	100			10
11	71	57	64	6		1	0		0	0	0					11	N	10.3	100			11
12	73	57	65	7		0	0		0	0	0					10	NW	10.2	100			12
13	71	56	64	6		1	0		0	0	0					11	NW	8.6	84			13
14	63	56	60	2		5	0		0	0	0					14	SW	0.0	0			14
15	59	56	58	0		7	0		0	0	0					18	NW	3.2	32			15
16	62	53	58	0		7	0		0	0	0					19	W	10.0	98			16
17	62	48	55	-3		10	0		0	0	0					12	NE	10.1	100			17
18	61	50	56	-1		9	0		0	0	0					15	NE	8.3	83			18
19	66	51	59	2		6	0		0	0	0					9	NE	8.7	87			19
20	64	53	59	2		6	0		0	0	0					12	E	9.6	96			20
21	64	50	57	0		8	0		0	0	0					14	W	9.1	91			21
22	67	49	58	1		7	0		0	0	0					11	W	7.0	70			22
23	63	50	57	0		8	0		0	0	0					11	NW	8.1	81			23
24	64	52	58	2		7	0		0	0	0					11	NW	8.9	90			24
25	70	52	61	5		4	0		0	0	0					9	W	8.3	84			25
26	71	53	62	6		3	0		0	0	0					9	N	9.9	100			26
27	70	51	61	5		4	0		0	0	0					9	NW	9.8	100			27
28	66	53	60	5		3	0		0	0	0					8	NW	9.8	100			28
29	65	48*	57	2		8	0		0	0	0					12	NE	9.8	100			29
30	61	50	56	1		9	0		0	0	0					9	NW	8.9	91			30

Sum	Sum				Total	Total		Total	Total	For the month:						Total	%	Sum	Sum
1980	1579				166	3	Number of days	.43	0					23	W	231.7	for		
Avg.	Avg.	Avg.	Dep.	Avg.	Dep.	Dep.	Precipitation	Dep.						Date	02	Possible	month	Avg.	Avg.
66.0	52.6	59.3	1.9		-65		≥ .01 inch 3	-1.55								304.5	76		

Number of days				Season to date				Greatest in 24 hours and dates			Greatest depth on ground of
Maximum Temp.		Minimum Temp.		Total	Total	Snow, sleet ≥ 1.0 inch 0	Thunderstorms	Precipitation	Snow, Sleet		snow, sleet or ice and date
≥ 32°	≥ 90° ‡	≤ 32°	≤ 0°	797	44		Heavy fog X	.42 5- 6	0		0
0	0	0	0	Dep.	Dep.						
				-20							

HOURLY PRECIPITATION (Water equivalent in inches) -TRACE AMOUNT ENTRIES MAY BE INCOMPLETE.

Date	A. M. Hour ending at 1	2	3	4	5	6	7	8	9	10	11	12	P. M. Hour ending at 1	2	3	4	5	6	7	8	9	10	11	12	Date
1																									1
2																									2
3																									3
4																									4
5				.06	.06	.10	.07	.07	.02	T		.01		.01									.01		5
6	.01					.02																			6
7							.01																		7
8																									8
9																									9
10																									10
11																									11
12																									12
13																									13
14																									14
15																									15
16																									16
17																									17
18																									18
19																									19
20																									20
21																									21
22																									22
23																									23
24																									24
25																									25
26																									26
27																									27
28																									28
29																									29
30																									30

* Extreme temperatures for the month. May be the last of more than one occurrence.
– Below zero temperature or negative departure from normal.
‡ ≥ 70° at Alaskan stations.
+ Also on an earlier date, or dates.
X Heavy fog restricts visibility to ¼ mile or less.
T In the Hourly Precipitation table and in columns 9, 10, and 11 indicates an amount too small to measure.

The season for degree days begins with July for heating and with January for cooling.
Data in columns 6, 12, 13, 14, and 15 are based on 8 observations per day at 3-hour intervals.
Wind directions are those from which the wind blows. Resultant wind is the vector sum of wind directions and speeds divided by the number of observations. Figures for directions are tens of degrees from true North; i.e., 09 = East, 18 = South, 27 = West, 36 = North, and 00 = Calm. When directions are in tens of degrees in Col. 17, entries in Col. 16 are fastest observed 1-minute speeds. If the / appears in Col. 17, speeds are gusts.

Any errors detected will be corrected and changes in summary data will be annotated in the annual summary.

Subscription Price: Local Climatological Data $1.00 per year including annual Summary if published. Single copy: 10 cents for monthly Summary; 15 cents for annual Summary. Checks or money orders should be made payable and remittances and correspondence should be sent to the Superintendent of Documents, U. S. Government Printing Office, Washington, D. C. 20402.

I certify that this is an official publication of the Environmental Science Services Administration, and is compiled from records on file at the National Weather Records Center, Asheville, North Carolina 28801.

William H. Haggard
Director, National Weather Records Center

SUMMARY BY HOURS

AVERAGES								Resultant wind	
Hour (Local time)	Sky cover (In tenths)	Station pressure (In.)	Dry bulb (°F)	Wet bulb (°F)	Rel. hum. %	Dew point (°F)	Wind speed (m.p.h.)	Direction	Speed (m.p.h.)

USCOMM—ESSA—ASHEVILLE 300

LOCAL CLIMATOLOGICAL DATA

U.S. DEPARTMENT OF COMMERCE
MAURICE H. STANS, Secretary
ENVIRONMENTAL SCIENCE SERVICES ADMINISTRATION
ENVIRONMENTAL DATA SERVICE

SAN FRANCISCO, CALIFORNIA
FEDERAL OFFICE BLDG.
DECEMBER 1969

Latitude 37° 47′ N Longitude 122° 25′ W Elevation (ground) 52 ft. Standard time used: PACIFIC

Date	Temperature (°F) Maximum	Minimum	Average	Departure from normal	Average dew point	Degree days (Base 65°) Heating	Cooling	Weather types shown by code 1-9 on dates of occurrence (123 456 789: Fog, Heavy Fog, Thunderstorm, Sleet, Hail, Glaze, Duststorm, Smoke, Haze, Blowing Snow)	Snow, Sleet, or Ice on ground at 08AM (In.)	Precipitation Water equivalent (In.)	Snow, sleet (In.)	Avg. station pressure (In.) Elev. 155 feet m.s.l.	Wind Resultant direction	Resultant speed (m.p.h.)	Average speed (m.p.h.)	Fastest mile Speed (m.p.h.)	Direction	Sunshine Hours and tenths	Percent of possible	Sky cover (Tenths) Sunrise to sunset	Midnight to midnight	Date
1	2	3	4	5	6	7A	7B	8	9	10	11	12	13	14	15	16	17	18	19	20	21	22
1	66*	49	58	3		7	0	DATA ARE NOT ENTERED IN THIS COLUMN BECAUSE RECORDS OF WEATHER TYPES MAY BE INCOMPLETE	0	0	0					8	W	9.0	92			1
2	65	48	57	2		8	0		0	0	0					14	W	9.7	100			2
3	65	49	57	2		8	0		0	0	0					17	W	8.5	88			3
4	62	52	57	3		8	0		0	0	0					12	W	7.9	82			4
5	63	48	56	2		9	0		0	0	0					15	W	8.4	86			5
6	58	50	54	0		11	0		0	0	0					12	W	5.1	53			6
7	58	52	55	1		10	0		0	0	0					15	W	6.4	66			7
8	57	51	54	0		11	0		0	.56	0					16	SE	3.6	37			8
9	58	50	54	1		11	0		0	.01	0					15	W	8.0	83			9
10	60	51	56	3		9	0		0	.70	0					15	SW	5.8	60			10
11	61	56	59	6		6	0		0	.10	0					19	SE	0.3	3			11
12	61	57	59	6		6	0		0	.08	0					14	SE	0.0	0			12
13	60	55	58	5		7	0		0	.01	0					12	W	0.4	4			13
14	61	53	57	4		8	0		0	0	0					12	NE	2.4	25			14
15	62	54	58	6		7	0		0	0	0					13	NE	6.2	65			15
16	63	51	57	5		8	0		0	0	0					10	SW	5.1	53			16
17	60	53	57	5		8	0		0	0	0					9	E	3.6	37			17
18	59	52	56	4		9	0		0	.23	0					13	SE	0.7	7			18
19	62	57	60	8		5	0		0	.54	0					29	SW	0.0	0			19
20	65	58	62	10		3	0		0	2.49	0					24	SW	0.0	0			20
21	64	52	58	6		7	0		0	.66	0					28	SW	2.5	26			21
22	57	50	54	2		11	0		0	0	0					11	W	2.3	24			22
23	60	53	57	5		8	0		0	.10	0					24	SW	0.0	0			23
24	62	56	59	7		6	0		0	.46	0					25	SW	2.5	26			24
25	59	50	55	3		10	0		0	.21	0					20	W	7.2	75			25
26	56	49	53	1		12	0		0	0	0					16	NW	9.6	100			26
27	55	46	51	0		14	0		0	0	0					20	NW	9.6	100			27
28	59	48	54	3		11	0		0	0	0					22	NE	9.6	100			28
29	59	46	53	2		12	0		0	0	0					14	NE	9.6	100			29
30	58	45	52	1		13	0		0	0	0					8	E	9.6	100			30
31	56	45*	51	0		14	0		0	0	0					12	NW	9.6	100			31
Sum		Sum				Total	Total			Total	Total	For the month:						Total	%	Sum	Sum	
1871		1386				277	0	Number of days		6.15	0					29	SW	163.2	for			
Avg.		Avg.	Avg.	Dep.	Avg.	Dep.	Dep.	Precipitation		Dep.						Date: 19		Possible	month	Avg.	Avg.	
60.4		51.2	55.8	3.3		-111		≥ .01 inch	13	1.88								297.7	55			

Season to date						
Number of days				Total	Total	Snow, sleet ≥ 1.0 inch 0
Maximum Temp.		Minimum Temp.		1074	44	Thunderstorms
≥ 32°	≤ 90°‡	≤ 32°	≤ 0°	Dep.	Dep.	Heavy fog X
0	0	0	0	-131		

Greatest in 24 hours and dates			Greatest depth on ground of
Precipitation		Snow, Sleet	Snow, sleet or ice and date
3.00	19-20	0	0

HOURLY PRECIPITATION (Water equivalent in inches) -Entries of Trace amounts may be incomplete

Date	A. M. Hour ending at 1	2	3	4	5	6	7	8	9	10	11	12	P. M. Hour ending at 1	2	3	4	5	6	7	8	9	10	11	12	Date
1																									1
2																									2
3																									3
4																									4
5																									5
6																									6
7																									7
8					.08	.09	.25	.10	.01	.01	.02														8
9					.01																				9
10		.01	.03	.18	.07	.01	.03	.26														.05	.06		10
11			.01		.02		.01										T	T	.01			.01	.02	.02	11
12			.01									.04	.01	.02	T										12
13			.01																						13
14																									14
15																									15
16																									16
17																									17
18	.02	.02	.01											T	.04	.03	T	.01		.06	.02	.02			18
19						.01	.03	.05	.11	.07	.09	.07	.07	T	.01	T	T		.01					.02	19
20	.15	.62	.54	.73	.22	.19	.04																		20
21					.06	.12	.18	.04	.07	.13	.03	.02	.01												21
22																									22
23								T	.01	T	T	.01	T	T	.02	T			.01			.01		.04	23
24	.01	.06	.07	.08	.11	.04	.03	.03	.02		.01														24
25	.03	.04	.05	.01	.01	.06		.01																	25
26																									26
27																									27
28																									28
29																									29
30																									30
31																									31

* Extreme temperatures for the month. May be the last of more than one occurrence.
– Below zero temperature or negative departure from normal.
‡ ≥ 70° at Alaskan stations.
+ Also on an earlier date, or dates.
X Heavy fog restricts visibility to ¼ mile or less.
T In the Hourly Precipitation table and in columns 9, 10, and 11 indicates an amount too small to measure.

The season for degree days begins with July for heating and with January for cooling.
Data in columns 6, 12, 13, 14, and 15 are based on 8 observations per day at 3-hour intervals.
Wind directions are those from which the wind blows. Resultant wind is the vector sum of wind directions and speeds divided by the number of observations. Figures for directions are tens of degrees from true North; i.e., 09 = East, 18 = South, 27 = West, 36 = North, and 00 = Calm. When directions are in tens of degrees in Col. 17, entries in Col. 16 are fastest observed 1-minute speeds. If the / appears in Col. 17, speeds are gusts.

Any errors detected will be corrected and changes in summary data will be annotated in the annual summary.

Subscription Price: Local Climatological Data $1.00 per year including annual Summary if published. Single copy: 10 cents for monthly Summary: 15 cents for annual Summary. Checks or money orders should be made payable and remittances and correspondence should be sent to the Superintendent of Documents, U. S. Government Printing Office, Washington, D. C. 20402.

I certify that this is an official publication of the Environmental Science Services Administration, and is compiled from records on file at the National Weather Records Center, Asheville, North Carolina 28801.

William H. Haggard
Director, National Weather Records Center

SUMMARY BY HOURS

Hour (Local time)	AVERAGES Sky cover (Tn. tenths)	Station pressure (In.)	Dry bulb (°F)	Wet bulb (°F)	Rel. hum. %	Dew point (°F)	Wind speed (m.p.h.)	Resultant wind Direction	Speed (m.p.h.)

USCOMM—ESSA—ASHEVILLE 300

LOCAL CLIMATOLOGICAL DATA

U.S. DEPARTMENT OF COMMERCE
MAURICE H. STANS, Secretary
ENVIRONMENTAL SCIENCE SERVICES ADMINISTRATION
ENVIRONMENTAL DATA SERVICE

SAN FRANCISCO, CALIFORNIA
FEDERAL OFFICE BLDG.
JANUARY 1970

Latitude 37° 47′ N Longitude 122° 25′ W Elevation (ground) 52 ft. Standard time used: PACIFIC

Date	Temperature (°F) Maximum	Minimum	Average	Departure from normal	Average dew point	Degree days (Base 65°) Heating	Cooling	Weather types shown by code 1-9 on dates of occurrence (Fog, Heavy Fog, Thunderstorm, Sleet, Hail, Glaze, Duststorm, Smoke, Haze, Blowing Snow)	Snow, Sleet, or Ice on ground at 08AM (In.)	Precipitation Water equivalent (In.)	Snow, sleet (In.)	Avg. station pressure (In.) Elev 155 feet m.s.l.	Wind Resultant direction	Resultant speed (m.p.h.)	Average speed (m.p.h.)	Fastest mile Speed (m.p.h.)	Direction	Sunshine Hours and tenths	Percent of possible	Sky cover (Tenths) Sunrise to sunset	Midnight to midnight	Date
1	2	3	4	5	6	7A	7B	8	9	10	11	12	13	14	15	16	17	18	19	20	21	22
1	60	44	52	1		13	0	DATA ARE NOT ENTERED IN THIS COLUMN BECAUSE RECORDS OF WEATHER TYPES MAY BE INCOMPLETE	0	0	0					9	W	8.3	86			1
2	56	48	52	1		13	0		0	0	0					14	NE	7.7	80			2
3	53	44	49	-2		16	0		0	0	0					10	N	8.8	91			3
4	51	44	48	-3		17	0		0	0	0					11	N	8.9	92			4
5	52	43	48	-3		17	0		0	0	0					13	E	8.2	85			5
6	51	42*	47	-4		18	0		0	0	0					11	SE	5.8	60			6
7	52	46	49	-2		16	0		0	.03	0					13	SE	0.0	0			7
8	58	47	53	2		12	0		0	.18	0					27	SE	0.0	0			8
9	59	50	55	4		10	0		0	.57	0					31	SE	0.0	0			9
10	58	51	55	4		10	0		0	.14	0					17	W	6.1	62			10
11	54	49	52	1		13	0		0	.40	0					17	SE	0.0	0			11
12	60	54	57	6		8	0		0	.04	0					18	SW	2.8	28			12
13	60	56	58	8		7	0		0	.23	0					18	SE	0.2	2			13
14	61	54	58	8		7	0		0	1.19	0					21	SW	2.0	20			14
15	56	52	54	4		11	0		0	.81	0					17	SE	0.0	0			15
16	62	56	59	9		6	0		0	.63	0					27	SW	5.3	54			16
17	59	55	57	6		8	0		0	.04	0					17	SW	3.8	38			17
18	59	53	56	5		9	0		0	0	0					9	W	5.5	55			18
19	61	54	58	7		7	0		0	.11	0					15	SE	0.5	5			19
20	61	55	58	7		7	0		0	1.41	0					17	S	0.2	2			20
21	62	60	61	10		4	0		0	.90	0					20	S	0.0	0			21
22	64*	58	61	10		4	0		0	.02	0					17	SW	0.3	3			22
23	61	53	57	6		8	0		0	.49	0					34	SW	0.0	0			23
24	57	52	55	4		10	0		0	0	0					23	SW	7.9	78			24
25	59	49	54	3		11	0		0	0	0					9	W	7.3	72			25
26	60	51	56	5		9	0		0	.08	0					19	SW	8.7	56			26
27	59	48	54	3		11	0		0	.49	0					27	S	10.1	99			27
28	57	45	51	0		14	0		0	0	0					17	NW	10.2	100			28
29	58	46	52	1		13	0		0	.01	0					14	W	10.2	100			29
30	58	47	53	2		12	0		0	.02	0					12	W	10.3	100			30
31	56	48	52	1		13	0		0	.02	0					19	W	5.9	58			31
	Sum 1794	Sum 1554				Total 334	Total 0	Number of days		Total 7.81	Total 0	For the month:				34	SW	Total 142.0	% for month	Sum	Sum	
	Avg. 57.9	Avg. 50.1	Avg. 54.0	Dep. 3.3	Avg.	Dep. -109	Dep.	Precipitation ≥ .01 inch 21		Dep. 3.26						Date 23		Possible 306.7	46	Avg.	Avg.	
	Number of days Maximum Temp. ≥ 32°	Maximum Temp. ≤ 90°‡	Minimum Temp. ≤ 32°	Minimum Temp. ≤ 0°		Season to date Total 1408 Dep. -240	Total 0 Dep.	Snow, sleet ≥ 1.0 inch 0 Thunderstorms Heavy fog X		Greatest in 24 hours and dates Precipitation 2.31 20-21		Snow, Sleet 0						Greatest depth on ground of snow, sleet or ice and date 0				
	0	0	0	0																		

HOURLY PRECIPITATION (Water equivalent in inches)—ENTRY OF TRACE AMOUNTS MAY BE INCOMPLETE.

Date	A. M. Hour ending at 1	2	3	4	5	6	7	8	9	10	11	12	P. M. Hour ending at 1	2	3	4	5	6	7	8	9	10	11	12	Date
1																									1
2																									2
3																									3
4																									4
5																									5
6																									6
7													.01	T		.01				.01					7
8									.01	T	.13	.01	.02								.01				8
9	.01	.01			.03	.02	.01	.07	.02	.01	.04	.07	.04	.03	.02	.17	T	T	.01				.01		9
10	.01			.02	.05	.05	.01																		10
11		.06	.07	.06	.01			.04	.05	.04	.01	.01				.01		.01	.01	.01	.01				11
12						.02	.01	.01				T	T												12
13									T	T			.01	.01	T	.03	.01	.04	.07	.01	.01	.01	.03		13
14	.03	.31	.08	.08	.01	.09	.13	.17	.12	.12	.05														14
15									T	.01				.05	.05	.07	.07	.05	.08	.22	.06	.05	.05	.05	15
16	.02	.09	.12	.12	.20	.08				T	T		T												16
17					.01	.02				.01															17
18																									18
19				.01					.01	.01				.04			.02	T	.01			.01			19
20														.10	.02	.12	.25	.21	.19	.10	.16	.07	.02	.17	20
21	.13	.08	.05	.03	.04	.04	.21	.15	.05	.02	.05	.03	.02												21
22		.01	.01																						22
23				.01	.01	T	T	T	T	T							T	T	.03	.14	.16	.10	T	.04	23
24																									24
25																									25
26																					.07	.01			26
27	.01	.29	.16	.03																					27
28																									28
29																							.01		29
30		.01		.01														.01							30
31																							.01		31

* Extreme temperatures for the month. May be the last of more than one occurrence.
– Below zero temperature or negative departure from normal.
‡ ≥ 70° at Alaskan stations.
+ Also on an earlier date, or dates.
X Heavy fog restricts visibility to ¼ mile or less.
T In the Hourly Precipitation table and in columns 9, 10, and 11 indicates an amount too small to measure.

The season for degree days begins with July for heating and with January for cooling.
Data in columns 6, 12, 13, 14, and 15 are based on 8 observations per day at 3-hour intervals.
Wind directions are those from which the wind blows. Resultant wind is the vector sum of wind directions and speeds divided by the number of observations. Figures for directions are tens of degrees from true North; i.e., 09 = East, 18 = South, 27 = West, 36 = North, and 00 = Calm. When directions are in tens of degrees in Col. 17, entries in Col. 16 are fastest observed 1-minute speeds. If the / appears in Col. 17, speeds are gusts.

Any errors detected will be corrected and changes in summary data will be annotated in the annual summary.

Subscription Price: Local Climatological Data $1.00 per year including annual Summary if published. Single copy: 10 cents for monthly Summary; 15 cents for annual Summary. Checks or money orders should be made payable and remittances and correspondence should be sent to the Superintendent of Documents, U. S. Government Printing Office, Washington, D. C. 20402.

I certify that this is an official publication of the Environmental Science Services Administration, and is compiled from records on file at the National Weather Records Center, Asheville, North Carolina 28801.

William H. Haggard
Director, National Weather Records Center

SUMMARY BY HOURS

Hour (Local time)	AVERAGES Sky cover (Tenths)	Station pressure (In.)	Dry bulb (°F)	Wet bulb (°F)	Rel. hum. %	Dew point (°F)	Wind speed (m.p.h.)	Resultant wind Direction	Speed (m.p.h.)

USCOMM—ESSA—ASHEVILLE 300

LOCAL CLIMATOLOGICAL DATA

U.S. DEPARTMENT OF COMMERCE
MAURICE H. STANS, Secretary
ENVIRONMENTAL SCIENCE SERVICES ADMINISTRATION
ENVIRONMENTAL DATA SERVICE

SAN FRANCISCO, CALIFORNIA
FEDERAL OFFICE BLDG.
FEBRUARY 1970

Latitude 37° 47′ N Longitude 122° 25′ W Elevation (ground) 52 ft. Standard time used: PACIFIC

Date	Temperature (°F) Maximum	Minimum	Average	Departure from normal	Average dew point	Degree days (Base 65) Heating	Cooling	Weather types shown by code 1-9 on dates of occurrence (1 Fog, 2 Heavy Fog, 3 Thunderstorm, 4 Ice Pellets, 5 Hail, 6 Glaze, 7 Duststorm, 8 Smoke, Haze, 9 Blowing Snow)	Snow, Sleet, or Ice on ground at 08AM (In.)	Precipitation Water equivalent (In.)	Snow, sleet (In.)	Avg. station pressure (In.) Elev. 155 feet m.s.l.	Wind Resultant direction	Resultant speed (m.p.h.)	Average speed (m.p.h.)	Fastest mile Speed (m.p.h.)	Direction	Sunshine Hours and tenths	Percent of possible	Sky cover (Tenths) Sunrise to sunset	Midnight to midnight	Date
1	2	3	4	5	6	7A	7B	8	9	10	11	12	13	14	15	16	17	18	19	20	21	22
1	60	50	55	3		10	0	DATA ARE NOT ENTERED IN THIS COLUMN BECAUSE RECORDS OF WEATHER TYPES MAY BE INCOMPLETE	0	.01	0					10	N	10.3	100			1
2	64	49	57	5		8	0		0	0	0					10	NE	10.4	100			2
3	61	49	55	3		10	0		0	0	0					12	NW	9.6	92			3
4	65	51	58	6		7	0		0	0	0					20	W	10.4	100			4
5	58	50	54	2		11	0		0	0	0					15	W	8.8	84			5
6	60	50	55	3		10	0		0	0	0					11	NW	8.1	77			6
7	66	51	59	7		6	0		0	0	0					11	NE	9.6	91			7
8	69	53	61	9		4	0		0	0	0					10	N	7.6	72			8
9	67	56	62	10		3	0		0	.04	0					25	SE	4.1	39			9
10	63	53	58	5		7	0		0	0	0					12	NW	6.5	61			10
11	64	56	60	7		5	0		0	0	0					12	SE	6.6	62			11
12	60	54	57	4		8	0		0	.20	0					29	S	7.2	67			12
13	59	51	55	2		10	0		0	.10	0					22	SE	6.3	59			13
14	59	49	54	1		11	0		0	0	0					10	W	8.5	79			14
15	59	51	55	2		10	0		0	0	0					14	SW	6.8	63			15
16	62	50	56	2		9	0		0	.59	0					27	SE	1.3	12			16
17	57	50	54	0		11	0		0	.02	0					18	W	9.7	89			17
18	63	46*	55	1		10	0		0	0	0					17	NW	10.9	100			18
19	65	53	59	5		6	0		0	0	0					21	NE	11.0	100			19
20	68	52	60	6		5	0		0	0	0					10	NE	11.0	100			20
21	63	50	57	3		8	0		0	0	0					20	S	11.1	100			21
22	65	49	57	3		8	0		0	0	0					16	W	11.1	100			22
23	64	47	56	2		9	0		0	0	0					9	NW	8.5	77			23
24	68	54	61	7		4	0		0	0	0					11	NW	9.8	87			24
25	69	53	61	7		4	0		0	0	0					9	NW	10.0	89			25
26	70*	53	62	8		3	0		0	0	0					17	W	11.0	98			26
27	65	51	58	4		7	0		0	.16	0					13	W	8.8	78			27
28	63	54	59	5		6	0		0	.44	0					21	S	8.4	74			28

Sum	Sum				Total	Total		Total	Total	For the month:			Total	%	Sum	Sum
1776	1435				210	0	Number of days	1.56	0		29	S	243.4	for		
Avg.	Avg.	Avg.	Dep.	Avg.	Dep.	Dep.	Precipitation	Dep.			Date: 12		Possible	month	Avg.	Avg.
63.4	51.3	57.4	4.4		-126		≥ .01 inch 8	-2.10					302.6	80		

Number of days				Season to date Total	Total	Snow, sleet ≥ 1.0 inch 0	Greatest in 24 hours and dates Precipitation		Snow, Sleet		Greatest depth on ground of snow, sleet or ice and date
Maximum Temp.		Minimum Temp.				Thunderstorms					
≥ 32°	≤ 90° ‡	≤ 32°	≤ 0°	Dep.	Dep.	Heavy fog X	.61	16-17	0		0
0	0	0	0	-366							

ENTRY OF TRACE AMOUNTS IN HOURLY PRECIPITATION MAY BE INCOMPLETE.

CORRECTION TO 1959 ANNUAL: DIRECTION OF EXTREME WIND FOR YEAR IN THE NORMALS, MEANS, AND EXTREMES TABLE SHOULD BE SE.

HOURLY PRECIPITATION (Water equivalent in inches)

Date	A. M. Hour ending at 1	2	3	4	5	6	7	8	9	10	11	12	P. M. Hour ending at 1	2	3	4	5	6	7	8	9	10	11	12	Date
1	.01																								1
2																									2
3																									3
4																									4
5																									5
6																									6
7																									7
8																									8
9																						.03	.01		9
10																									10
11																									11
12						.11	.02	.01	.05							.01									12
13					.02	.01	.04	.02												.01					13
14																									14
15																									15
16															T	T	.05	.12	.19	.08	.02	T	.13		16
17											T	.01	.01												17
18																									18
19																									19
20																									20
21																									21
22																									22
23																									23
24																									24
25																									25
26																									26
27																	T	.01	.04	.04	.02	.05			27
28			.09	.03	.03	.10	.03	.07	.03	.01	.02	.01	.01											.01	28

* Extreme temperatures for the month. May be the last of more than one occurrence.
– Below zero temperature or negative departure from normal.
‡ ≥ 70° at Alaskan stations.
+ Also on an earlier date, or dates.
X Heavy fog restricts visibility to ¼ mile or less.
T In the Hourly Precipitation table and in columns 9, 10, and 11 indicates an amount too small to measure.

The season for degree days begins with July for heating and with January for cooling.
Data in columns 6, 12, 13, 14, and 15 are based on 8 observations per day at 3-hour intervals.
Wind directions are those from which the wind blows. Resultant wind is the vector sum of wind directions and speeds divided by the number of observations. Figures for directions are tens of degrees from true North; i.e., 09 = East, 18 = South, 27 = West, 36 = North, and 00 = Calm. When directions are in tens of degrees in Col. 17, entries in Col. 16 are fastest observed 1-minute speeds. If the / appears in Col. 17, speeds are gusts.

Any errors detected will be corrected and changes in summary data will be annotated in the annual summary.

Subscription Price: Local Climatological Data $1.00 per year including annual Summary if published. Single copy: 10 cents for monthly Summary; 15 cents for annual Summary. Checks or money orders should be made payable and remittances and correspondence should be sent to the Superintendent of Documents, U. S. Government Printing Office, Washington, D. C. 20402.

I certify that this is an official publication of the Environmental Science Services Administration, and is compiled from records on file at the National Weather Records Center, Asheville, North Carolina 28801.

William H. Haggard
Director, National Weather Records Center

SUMMARY BY HOURS

AVERAGES								Resultant wind	
Hour (Local time)	Sky cover (tenths)	Station pressure (In.)	Dry bulb (°F)	Wet bulb (°F)	Rel. hum. %	Dew point (°F)	Wind speed (m.p.h.)	Direction	Speed (m.p.h.)

USCOMM—ESSA—ASHEVILLE 300

Appendix C (Continued)

LOCAL CLIMATOLOGICAL DATA

U.S. DEPARTMENT OF COMMERCE
MAURICE H. STANS, Secretary
ENVIRONMENTAL SCIENCE SERVICES ADMINISTRATION
ENVIRONMENTAL DATA SERVICE

SAN FRANCISCO, CALIFORNIA
FEDERAL OFFICE BLDG.
MARCH 1970

Latitude 37° 47′ N Longitude 122° 25′ W Elevation (ground) 52 ft. Standard time used: PACIFIC

Date	Temperature (°F) Maximum	Minimum	Average	Departure from normal	Average dew point	Degree days (Base 65°) Heating	Cooling	Weather types shown by code 1-9 on dates of occurrence (Fog, Heavy Fog, Thunderstorm, Sleet, Hail, Glaze, Duststorm, Blowing Dust, Blowing Snow)	Snow, Sleet, or Ice on ground at 08AM (In.)	Precipitation Water equivalent (In.)	Snow, sleet (In.)	Avg. station pressure (In.) Elev. 155 feet m.s.l.	Wind Resultant direction	Resultant speed (m.p.h.)	Average speed (m.p.h.)	Fastest mile Speed (m.p.h.)	Direction	Sunshine Hours and tenths	Percent of possible	Sky cover (Tenths) Sunrise to sunset	Midnight to midnight	Date
1	2	3	4	5	6	7A	7B	8	9	10	11	12	13	14	15	16	17	18	19	20	21	22
1	55	48	52	-2		13	0	DATA ARE NOT ENTERED IN THIS COLUMN BECAUSE RECORDS OF WEATHER TYPES MAY BE INCOMPLETE	0	.22	0					23	W	9.8	86			1
2	55	47	51	-3		14	0		0	0	0					16	SW	11.4	100			2
3	57	48	53	-1		12	0		0	.04	0					11	W	3.9	34			3
4	53	45*	49	-5		16	0		0	1.17	0					20	SE	3.6	31			4
5	59	46	53	-1		12	0		0	0	0					16	W	11.5	100			5
6	62	49	56	2		9	0		0	0	0					13	NW	10.8	94			6
7	64	52	58	4		7	0		0	.04	0					14	SW	5.9	51			7
8	6[illegible]	50	56	2		9	0		0	0	0					20	W	11.6	100			8
9	56	50	53	-1		12	0		0	.06	0					19	SW	2.2	19			9
10	56	48	52	-3		13	0		0	0	0					15	W	8.9	76			10
11	57	51	54	-1		11	0		0	T	0					12	SE	0.3	2			11
12	63	52	59	4		6	0		0	0	0					15	W	6.4	54			12
13	69	54	62	7		3	0		0	0	0					15	W	9.8	83			13
14	62	54	58	3		7	0		0	.02	0					22	W	10.2	86			14
15	67	51	59	4		6	0		0	0	0					15	SW	11.9	100			15
16	68	53	61	6		4	0		0	0	0					22	W	12.0	100			16
17	67	52	60	5		5	0		0	0	0					22	N	12.0	100			17
18	65	54	60	5		5	0		0	0	0					23	N	12.1	100			18
19	67	53	60	5		5	0		0	0	0					17	N	12.1	100			19
20	66	50	58	3		7	0		0	0	0					21	W	12.1	100			20
21	64	49	57	2		8	0		0	0	0					18	W	11.1	92			21
22*	62	50	56	1		9	0		0	0	0					18	W	12.2	100			22
23	73	51	62	7		3	0		0	0	0					14	W	12.3	100			23
24	78	55	67	12		0	2		0	0	0					17	W	12.3	100			24
25	79*	56	68	13		0	3		0	0	0					16	SW	12.3	100			25
26	72	54	63	8		2	0		0	0	0					21	NE	12.4	100			26
27	74	54	64	9		1	0		0	0	0					26	N	12.4	100			27
28	64	52	58	3		7	0		0	0	0					21	W	12.5	100			28
29	66	52	59	4		6	0		0	0	0					24	W	12.5	100			29
30	66	48	57	2		8	0		0	0	0					20	NE	12.6	100			30
31	68	57	63	8		2	0		0	0	0					22	NE	12.6	100			31
Sum	1997	Sum 1585				Total 222	Total 5	Number of days Precipitation ≥ .01 inch 6		Total 1.55	Total 0	For the month				26	N	Total 313.7	% for month	Sum Avg.	Sum Avg.	
Avg	64.4	Avg 51.1	Avg 57.8	Dep. 3.1	Avg.	Dep -97	Dep.			Dep. -1.38						Date 27		Possible 371.0	85			
						Season to date Total 1840	Total 5	Snow, sleet ≥ 1.0 inch 0 Thunderstorms Heavy fog X		Greatest in 24 hours and dates Precipitation .17 6		Snow, Sleet 0				Greatest depth on ground of snow, sleet or ice and date 2						
Number of days Maximum Temp. ≥ 90° 0	≤ 32° 0	Minimum Temp. ≤ 32° 0	≤ 0° 0			Dep. -463	Dep. -7															

HOURLY PRECIPITATION (Water equivalent in inches) – ENTRIES OF TRACE AMOUNTS MAY BE INCOMPLETE

Date	A. M. Hour ending at 1	2	3	4	5	6	7	8	9	10	11	12	P. M. 1	2	3	4	5	6	7	8	9	10	11	12	Date
1	.01	.04	.09	.05	.02		.01																		1
2																									2
3						T	T					.03	.01												3
4					.01	.05	.11	.11	.18	.39	.20	.09	.03												4
5																									5
6																									6
7																					.01	.01	.02		7
8																									8
9												T	T	.02	.01		T			.01	.02				9
10																									10
11													T	T	T	T	T								11
12																									12
13																									13
14							.01	.01																	14
15																									15
16																									16
17																									17
18																									18
19																									19
20																									20
21																									21
22																									22
23																									23
24																									24
25																									25
26																									26
27																									27
28																									28
29																									29
30																									30
31																									31

* Extreme temperatures for the month. May be the last of more than one occurrence.
– Below zero temperature or negative departure from normal.
‡ 70° at Alaskan stations.
+ Also on an earlier date, or dates.
X Heavy fog restricts visibility to ¼ mile or less.
T In the Hourly Precipitation table and in columns 8, 10, and 11 indicates an amount too small to measure.

The season for degree days begins with July for heating and with January for cooling.
Data in columns 6, 12, 13, 14, and 15 are based on 8 observations per day at 3-hour intervals.
Wind directions are those from which the wind blows. Resultant wind is the vector sum of wind directions and speeds divided by the number of observations. Figures for directions are tens of degrees from true North; i.e., 09 = East, 18 = South, 27 = West, 36 = North, and 00 = Calm. When directions are in tens of degrees in Col. 17 entries in Col. 16 are fastest observed 1-minute speeds. If the / appears in Col. 17, speeds are gusts.

Any errors detected will be corrected and changes in summary data will be annotated in the annual summary.

Subscription Price: Local Climatological Data $1.00 per year including annual Summary if published. Single copy: 10 cents for monthly Summary; 15 cents for annual Summary. Checks or money orders should be made payable and remittances and correspondence should be sent to the Superintendent of Documents, U. S. Government Printing Office, Washington, D. C. 20402.

I certify that this is an official publication of the Environmental Science Services Administration, and is compiled from records on file at the National Weather Records Center, Asheville, North Carolina 28801.

William H. Haggard
Director, National Weather Records Center

SUMMARY BY HOURS

Hour (Local Time)	Averages: Sky cover (Tenths)	Station pressure (In.)	Dry bulb (°F)	Wet bulb (°F)	Rel. hum. (%)	Dew point (°F)	Wind speed (m.p.h.)	Resultant wind: Direction	Speed (m.p.h.)

USCOMM—ESSA—ASHEVILLE 300

LOCAL CLIMATOLOGICAL DATA

U.S. DEPARTMENT OF COMMERCE
MAURICE H. STANS, Secretary
ENVIRONMENTAL SCIENCE SERVICES ADMINISTRATION
ENVIRONMENTAL DATA SERVICE

SAN FRANCISCO, CALIFORNIA
FEDERAL OFFICE BLDG.
APRIL 1970

Latitude 37° 47′ N Longitude 122° 25′ W Elevation (ground) 52 ft. Standard time used: PACIFIC

Date	Temperature (°F) Maximum	Minimum	Average	Departure from normal	Average dew point	Degree days (Base 65°) Heating	Cooling	Weather types on dates of occurrence (1 Fog, 2 Heavy fog x, 3 Thunderstorm, 4 Ice pellets, 5 Hail, 6 Glaze, 7 Duststorm, 8 Smoke, Haze, 9 Blowing snow)	Snow, ice pellets or ice on ground at 08AM (In.)	Precipitation Water equivalent (In.)	Snow, ice pellets (In.)	Avg. station pressure (In.) Elev. 155 feet m.s.l.	Wind Resultant direction	Resultant speed (m.p.h.)	Average speed (m.p.h.)	Fastest mile Speed (m.p.h.)	Direction	Sunshine Hours and tenths	Percent of possible	Sky cover (Tenths) Sunrise to sunset	Midnight to midnight	Date
1	2	3	4	5	6	7A	7B	8	9	10	11	12	13	14	15	16	17	18	19	20	21	22
1	69	50	60	5		5	0	DATA ARE NOT ENTERED IN THIS COLUMN BECAUSE RECORDS OF WEATHER TYPES MAY BE INCOMPLETE	0	0	0					17	W	12.6	100			1
2	66	49	58	3		7	0		0	0	0					18	W	12.7	100			2
3	74*	51	63*	7		2	0		0	0	0					18	W	12.7	100			3
4	72	50	61	5		4	0		0	0	0					17	W	12.7	100			4
5	59	50	55	-1		10	0		0	0	0					19	W	12.8	100			5
6	58	48	53	-3		12	0		0	0	0					27	W	12.4	97			6
7	57	46	52	-4		13	0		0	0	0					19	W	12.9	100			7
8	61	47	54	-2		11	0		0	0	0					21	W	10.3	80			8
9	58	49	54	-2		11	0		0	0	0					19	W	12.2	94			9
10	59	50	55	-1		10	0		0	0	0					28	W	11.0	85			10
11	61	48	55	-1		10	0		0	0	0					18	W	13.0	100			11
12	64	47	56	0		9	0		0	0	0					31	SW	13.1	100			12
13	52	45	49	-7		16	0		0	.01	0					33	SW	6.9	53			13
14	55	47	51	-5		14	0		0	0	0					27	SW	11.0	84			14
15	54	45	50	-6		15	0		0	0	0					21	W	8.5	64			15
16	57	46	52	-4		13	0		0	0	0					17	W	13.2	100			16
17	59	47	53	-3		12	0		0	0	0					26	SW	13.3	100			17
18	58	48	53	-3		12	0		0	0	0					28	NW	13.0	98			18
19	56	48	52	-4		13	0		0	.03	0					26	W	13.3	100			19
20	57	46	52	-4		13	0		0	0	0					20	W	11.7	87			20
21	54	44	49	-7		16	0		0	0	0					26	W	13.3	100			21
22	56	45	51	-5		14	0		0	0	0					26	W	12.5	93			22
23	56	45	51	-5		14	0		0	0	0					25	W	13.2	98			23
24	60	47	54	-2		11	0		0	0	0					26	SW	13.5	100			24
25	55	48	52	-4		13	0		0	0	0					26	W	13.5	100			25
26	54	45	50	-6		15	0		0	.02	0					18	W	6.8	50			26
27	51	44*	48*	-8		17	0		0	0	0					30	W	12.8	94			27
28	58	45	52	-4		13	0		0	0	0					21	W	13.7	100			28
29	63	48	56	0		9	0		0	0	0					20	W	13.6	99			29
30	65	51	58	2		7	0		0	0	0					24	W	13.7	100			30
	Sum 1778	Sum 1419				Total 341	Total 0	Number of days		Total .06	Total 0	For the month:				33	SW	Total 365.9	% for	Sum	Sum	
	Avg. 59.3	Avg. 47.3	Avg. 53.3	Dep. -2.4	Avg.	Dep. 62	Dep.	Precipitation ≥ .01 inch	3	Dep. -1.38						Date	13	Possible 395.5	month 93	Avg.	Avg.	
	Number of days					Season to date Total 2181	Total 5	Snow, ice pellets ≥ 1.0 inch	0	Greatest in 24 hours and dates						Greatest depth on ground of snow, ice pellets or ice and date						
	Maximum Temp.		Minimum Temp.			Dep. -401	Dep.	Thunderstorms		Precipitation		Snow, ice pellets										
	> 90 ‡	< 32	< 32°	< 0				Heavy fog X		.03	19	0										
	0	0	0	0				Clear	Partly cloudy		Cloudy											

HOURLY PRECIPITATION (Water equivalent in inches) – TRACE AMOUNT ENTRIES MAY BE INCOMPLETE.

Date	A.M. Hour ending at 1	2	3	4	5	6	7	8	9	10	11	12	P.M. Hour ending at 1	2	3	4	5	6	7	8	9	10	11	12	Date
1																									1
2																									2
3																									3
4																									4
5																									5
6																									6
7																									7
8																									8
9																									9
10																									10
11																									11
12																									12
13							T	T	T	.01	T														13
14																									14
15																									15
16																									16
17																									17
18																									18
19		.02	.01																						19
20																									20
21																									21
22																									22
23																									23
24																									24
25																									25
26							.02																		26
27																									27
28																									28
29																									29
30																									30

* Extreme temperatures for the month. May be the last of more than one occurrence.
– Below zero temperature or negative departure from normal.
‡ ≥ 70° at Alaskan stations.
\+ Also on an earlier date, or dates.
X Heavy fog restricts visibility to ¼ mile or less.
T In the Hourly Precipitation table and in columns 9, 10, and 11 indicates an amount too small to measure.

The season for degree days begins with July for heating and with January for cooling.
Data in columns 6, 12, 13, 14, and 15 are based on 8 observations per day at 3-hour intervals.
Wind directions are those from which the wind blows. Resultant wind is the vector sum of wind directions and speeds divided by the number of observations. Figures for directions are tens of degrees from true North; i.e., 9 = East, 18 = South, 27 = West, 36 = North, and 00 = Calm. When directions are in tens of degrees in Col. 17, entries in Col. 16 are fastest observed 1-minute speeds. If the / appears in Col. 17, speeds are gusts.

Any errors detected will be corrected and changes in summary data will be annotated in the annual summary.

Subscription Price: Local Climatological Data $1.00 per year including annual Summary if published. Single copy: 10 cents for monthly Summary; 15 cents for annual Summary. Checks or money orders should be made payable and remittances and correspondence should be sent to the Superintendent of Documents, U. S. Government Printing Office, Washington, D. C. 20402.

I certify that this is an official publication of the Environmental Science Services Administration, and is compiled from records on file at the National Weather Records Center, Asheville, North Carolina 28801.

William H. Haggard
Director, National Weather Records Center

SUMMARY BY HOURS

Hour (Local time)	Sky cover (Tenths)	Station pressure (In.)	AVERAGES Dry bulb (°F)	Wet bulb (°F)	Rel. hum. (%)	Dew point (°F)	Wind speed (m.p.h.)	Resultant wind Direction	Speed (m.p.h.)

USCOMM—ESSA—ASHEVILLE 325

LOCAL CLIMATOLOGICAL DATA

U.S. DEPARTMENT OF COMMERCE
MAURICE H. STANS, Secretary
ENVIRONMENTAL SCIENCE SERVICES ADMINISTRATION
ENVIRONMENTAL DATA SERVICE

SAN FRANCISCO, CALIFORNIA
FEDERAL OFFICE BLDG.
MAY 1970

Latitude 37° 47′ N Longitude 122° 25′ W Elevation (ground) 52 ft. Standard time used: PACIFIC

Date	Temperature (°F) Maximum	Minimum	Average	Departure from normal	Average dew point	Degree days (Base 65°) Heating	Cooling	Weather types on dates of occurrence (1 Fog, 2 Heavy fog x, 3 Thunderstorm, 4 Ice pellets, 5 Hail, 6 Glaze, 7 Duststorm, 8 Smoke, Haze, 9 Blowing snow)	Snow, ice pellets or ice on ground at 08AM (In.)	Precipitation Water equivalent (In.)	Snow, ice pellets (In.)	Avg station pressure (In.) Elev. 155 feet m.s.l.	Wind Resultant direction	Resultant speed (m.p.h.)	Average speed (m.p.h.)	Fastest mile Speed (m.p.h.)	Direction	Sunshine Hours and tenths	Percent of possible	Sky cover (Tenths) Sunrise to sunset	Midnight to midnight	Date
1	2	3	4	5	6	7A	7B	8	9	10	11	12	13	14	15	16	17	18	19	20	21	22
1	76	51	64	8		1	0	DATA ARE NOT ENTERED IN THIS COLUMN BECAUSE RECORDS OF WEATHER TYPES MAY BE INCOMPLETE	0	0	0					18	W	13.8	100			1
2	77	51	64	8		1	0		0	0	0					17	W	13.8	100			2
3	72	48	60	4		5	0		0	0	0					24	W	13.5	98			3
4	57	47	52	-4		13	0		0	0	0					21	W	7.5	54			4
5	55	48	52	-4		13	0		0	0	0					24	SW	0.5	4			5
6	55	48	52	-4		13	0		0	0	0					26	W	8.7	62			6
7	58	47*	53	-3		12	0		0	0	0					23	W	11.3	81			7
8	60	51	56	0		9	0		0	T	0					22	W	2.5	18			8
9	56	50	53	-3		12	0		0	0	0					33	SW	13.3	95			9
10	54	48	51*	-5		14	0		0	0	0					26	W	13.3	94			10
11	58	48	53	-4		12	0		0	0	0					18	W	11.4	81			11
12	63	50	57	0		8	0		0	T	0					13	W	4.6	32			12
13	64	53	59	2		6	0		0	.03	0					20	W	9.1	65			13
14	79	54	67	10		0	2		0	0	0					15	W	14.2	100			14
15	91*	63	77*	20		0	12		0	0	0					17	SW	14.2	100			15
16	79	53	66	9		0	1		0	0	0					19	W	13.5	94			16
17	58	51	55	-2		10	0		0	0	0					24	W	10.2	72			17
18	55	49	52	-6		13	0		0	0	0					24	W	4.2	30			18
19	56	49	53	-5		12	0		0	0	0					33	W	14.2	99			19
20	62	48	55	-3		10	0		0	0	0					22	W	14.3	100			20
21	64	49	57	-1		8	0		0	0	0					25	W	14.4	100			21
22	67	51	59	0		6	0		0	0	0					25	W	14.4	100			22
23	72	51	62	3		3	0		0	0	0					18	W	14.4	100			23
24	59	51	55	-4		10	0		0	0	0					23	W	10.5	73			24
25	64	53	59	0		6	0		0	0	0					19	W	10.2	71			25
26	59	51	55	-4		10	0		0	T	0					17	W	0.2	1			26
27	56	49	53	-6		12	0		0	0	0					21	SW	9.2	63			27
28	61	49	55	-4		10	0		0	0	0					24	W	14.4	99			28
29	63	50	57	-2		8	0		0	0	0					24	SW	14.6	100			29
30	77	52	65	6		0	0		0	0	0					18	W	14.6	100			30
31	83	54	69	10		0	4		0	0	0					21	W	14.6	100			31
	Sum 2010	Sum 1567				Total 237	Total 19			Total .03	Total 0	For the month:				33	W	Total 339.6	% for month	Sum	Sum	
	Avg. 64.8	Avg. 50.5	Avg. 57.7	Dep. 0.3	Avg.	Dep. -2	Dep.	Number of days: Precipitation ≥ .01 inch 1; Snow, ice pellets ≥ 1.0 inch 0; Thunderstorms; Heavy fog X		Dep. -0.60						Date 19		Possible 440.6	77	Avg.	Avg.	

Number of days: Maximum Temp. ≥ 90°	Maximum Temp. ≤ 32°	Minimum Temp. ≤ 32°	Minimum Temp. < 0°	Season to date Heating Total	Cooling Total
1	0	0	0	2418	24
				Dep. =403	Dep.

Clear | Partly cloudy | Cloudy

Greatest in 24 hours and dates: Precipitation .03 13; Snow, ice pellets 0

Greatest depth on ground of snow, ice pellets or ice and date: 0

HOURLY PRECIPITATION (Water equivalent in inches)– TRACE AMOUNT ENTRIES MAY BE INCOMPLETE.

Date	A.M. Hour ending at 1	2	3	4	5	6	7	8	9	10	11	12	P.M. Hour ending at 1	2	3	4	5	6	7	8	9	10	11	12	Date
1																									1
2																									2
3																									3
4																									4
5																									5
6																									6
7																									7
8						T	T	T	T				T	T	T	T	T	T							8
9																									9
10																									10
11																									11
12																T									12
13		.01	.01	.01																					13
14																									14
15																									15
16																									16
17																									17
18																									18
19																									19
20																									20
21																									21
22																									22
23																									23
24																									24
25																									25
26						T	T	T	T																26
27																									27
28																									28
29																									29
30																									30
31																									31

* Extreme temperatures for the month. May be the last of more than one occurrence.
– Below zero temperature or negative departure from normal.
‡ ≥ 70° at Alaskan stations.
– Also on an earlier date, or dates.
X Heavy fog restricts visibility to ¼ mile or less.
T In the Hourly Precipitation table and in columns 9, 10, and 11 indicates an amount too small to measure.
The season for degree days begins with July for heating and with January for cooling.
Data in columns 6, 12, 13, 14, and 15 are based on 8 observations per day at 3-hour intervals.
Wind directions are those from which the wind blows. Resultant wind is the vector sum of wind directions and speeds divided by the number of observations. Figures for directions are tens of degrees from true North; i.e. 09 = East, 18 = South, 27 = West, 36 = North, and 00 = Calm. When directions are in tens of degrees in Col. 17, entries in Col. 16 are fastest observed 1-minute speeds. If the / appears in Col. 17, speeds are gusts.

Any errors detected will be corrected and changes in summary data will be annotated in the annual summary.

Subscription Price: Local Climatological Data $1.00 per year including annual Summary if published. Single copy: 10 cents for monthly Summary; 15 cents for annual Summary. Checks or money orders should be made payable and remittances and correspondence should be sent to the Superintendent of Documents, U. S. Government Printing Office, Washington, D. C. 20402

I certify that this is an official publication of the Environmental Science Services Administration, and is compiled from records on file at the National Weather Records Center, Asheville, North Carolina 28801.

William S. Haggard
Director, National Weather Records Center

SUMMARY BY HOURS

(Local time)	AVERAGES Sky cover (In tenths)	Station pressure (In.)	Dry bulb (°F)	Wet bulb (°F)	Rel. hum. (%)	Dew point (°F)	Wind speed (m.p.h.)	Resultant wind Direction	Speed (m.p.h.)

USCOMM—ESSA—ASHEVILLE 325

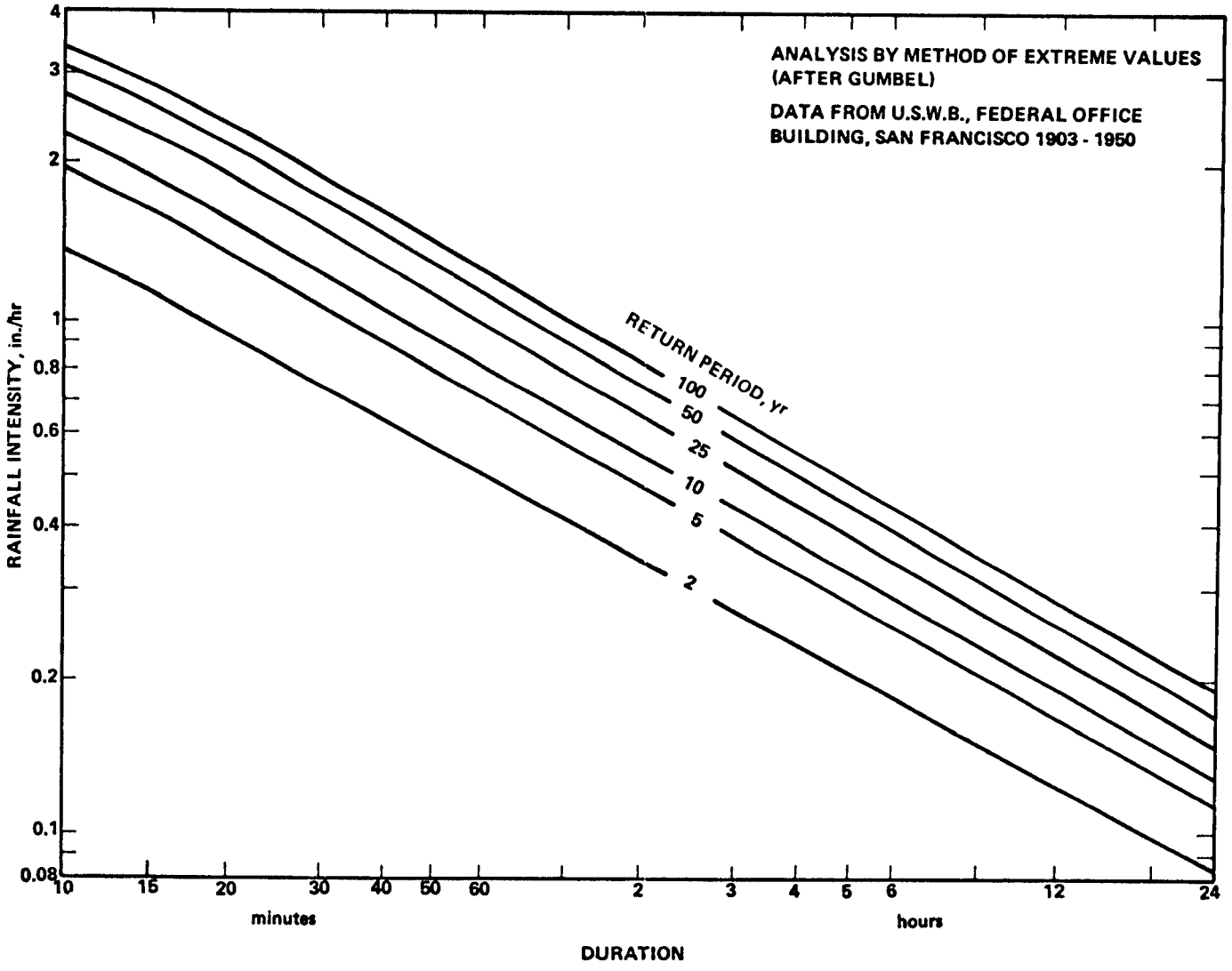

Appendix D. RAINFALL INTENSITY-DURATION-FREQUENCY RELATIONSHIPS

Appendix E

CHARACTERISTICS OF COMBINED SEWAGE
BULK SAMPLE
4-5 April 1969

Time	2230	2320	0020	0120	0220
Flow, cfs	0.297	0.050	0.606	0.518	0.022
Total Solids, mg/l	575	130	80	44	85
Total Volatile Solids, mg/l	420	50	25	16	25
Total Suspended Solids, mg/l	426	26	9	19	22
Total Volatile Suspended Solids, mg/l	373	15	5	12	12
Settleable Solids, ml/l	-	-	-	-	-
Floatables, mg/l	-	-	-	-	-
Particle Size Distribution, mg/l	-	-	-	-	-
>3.327 mm	-	-	-	-	-
3.327-0.991 mm	-	-	-	-	-
0.991-0.295 mm	-	-	-	-	-
0.295-0.074 mm	-	-	-	-	-
<0.074 mm	-	-	-	-	-
size at 50-percentile by weight, mm	-	-	-	-	-
BOD, mg/l	202	11	3	4	5
COD, mg/l	480	55	19	38	38
Hexane Extractable Material, mg/l	12.7	2.5	1.3	10.3	1.7
Total Coliforms, MPN/100 ml	1.5×10^7	2.8×10^5	9.3×10^4	2.1×10^5	2.4×10^6
Fecal Coliforms, MPN/100 ml	4.6×10^5	9.1×10^3	4.3×10^4	2.3×10^4	2.3×10^4
Fecal Streptococci, MPN/100 ml	$<7.3 \times 10^4$	$<1.5 \times 10^3$	$<4.3 \times 10^3$	$<7.5 \times 10^3$	$<4.3 \times 10^3$

5 November 1969

Time	0520	0620	0720	0820	0920
Flow, cfs	0.591	0.711	0.706	0.499	0.075
Total Solids, mg/l	148	140	180	220	432
Total Volatile Solids, mg/l	40	44	64	112	224
Total Suspended Solids, mg/l	34	45	63	57	185
Total Volatile Suspended Solids, mg/l	15	31	24	40	131
Settleable Solids, ml/l	5	0.7	1	0.6	0.7
Floatables, mg/l	1.4	2.4	3.9	2.3	11.8
Particle Size Distribution, mg/l					
>3.327 mm	0	trace	trace	14.4	29.5
3.327-0.991 mm	0	trace	trace	11.2	14.3
0.991-0.295 mm	trace	trace	5.5	42.5	36.5
0.295-0.074 mm	trace	4.1	5.6	22.9	33.4
<0.074 mm	16.3	18.4	34.5	69.5	135.7
size at 50-percentile by weight, mm	-	-	0.018	0.14	0.05
BOD, mg/l	9.5	11.0	11	61	175
COD, mg/l	51.6	62.5	82.5	132.4	626
Hexane Extractable Material, mg/l	4.1	4	3.8	7.2	14.5
Total Coliforms, MPN/100 ml	2.3×10^5	2.3×10^5	3×10^4	4.3×10^6	2.3×10^6
Fecal Coliforms, MPN/100 ml	3×10^4	3×10^4	3×10^4	4.3×10^6	9×10^5
Fecal Streptococci, MPN/100 ml	9×10^3	4.3×10^4	9×10^3	4.3×10^5	3×10^4

Appendix E (continued)

CHARACTERISTICS OF COMBINED SEWAGE
BULK SAMPLE
19 December 1969

Time	1045	1145	1240	1340	1440
Flow, cfs	0.375	0.447	0.413	0.073	0.046
Total Solids, mg/l	95	115	135	415	275
Total Volatile Solids, mg/l	50	65	60	180	125
Total Suspended Solids, mg/l	19	46	31	112	84
Total Volatile Suspended Solids, mg/l	9	31	21	70	55
Settleable Solids, ml/l	0.2	1.5	1	3.5	2.5
Floatables, mg/l	7.1	3.6	4.2	4.4	3.9
Particle Size Distribution, mg/l					
>3.327 mm	0	0	0	56.9	6.3
3.327-0.991 mm	0	1.7	4.8	5.1	4
0.991-0.295 mm	2.9	4.2	11.6	16.3	8.9
0.295-0.074 mm	5.3	12.5	11.8	27.7	24.6
<0.074 mm	10.8	27.6	2.8	6	44.2
size at 50-percentile by weight, mm	0.054	0.049	0.34	0.45	0.074
BOD, mg/l	14.7	15	16.8	77.4	40.5
COD, mg/l	76.8	57.6	57.6	221	144
Hexane Extractable Material, mg/l	4.1	6.1	4.8	36.3	1.6
Total Coliforms, MPN/100 ml	1.5×10^5	4.6×10^6	4.6×10^6	2.4×10^6	4.6×10^6
Fecal Coliforms, MPN/100 ml	9.3×10^4	4.3×10^5	2.4×10^6	4.6×10^5	4.6×10^5
Fecal Streptococci, MPN/100 ml	7.5×10^3	4.3×10^3	2.3×10^3	1.1×10^5	$>1.1 \times 10^5$

21 December 1969

Time	930	1025	1125	1225	1410
Flow, cfs	0.910	0.175	0.169	0.105	0.070
Total Solids, mg/l	110	280	210	250	400
Total Volatile Solids, mg/l	80	165	115	140	140
Total Suspended Solids, mg/l	55	89	79	98	118
Total Volatile Suspended Solids, mg/l	42	76	64	68	94
Settleable Solids, ml/l	2.5	13	4.5	2.5	7
Floatables, mg/l	2.3	1.5	3.6	3.5	4.2
Particle Size Distribution, mg/l					
>3.327 mm	8.8	0	0	0	0
3.327-0.991 mm	14.1	8.6	5.9	20.2	8.3
0.991-0.295 mm	9	32.4	13.0	16.3	34.7
0.295-0.074 mm	15.1	18.1	14.7	25.8	19.5
<0.074 mm	8	29.9	45.4	35.7	50.7
size at 50-percentile by weight, mm	0.54	0.22	0.047	0.15	0.11
BOD, mg/l	32.6	75.9	56.4	62.4	102
COD, mg/l	86.4	158	182	154	257
Hexane Extractable Material, mg/l	4.4	2.5	5.1	6.7	28.5
Total Coliforms, MPN/100 ml	4.6×10^5	2.4×10^6	2.4×10^6	9.3×10^5	4.6×10^6
Fecal Coliforms, MPN/100 ml	4.3×10^4	2.4×10^6	2.4×10^6	4.6×10^5	4.6×10^6
Fecal Streptococci, MPN/100 ml	9.1×10^2	-	-	-	2.4×10^4

Appendix E (continued)

CHARACTERISTICS OF COMBINED SEWAGE
BULK SAMPLE
13 January 1970

Time	1800	1900	2100	2200	2300
Flow, cfs	0.685	0.056	0.094	0.095	0.080
Total Solids, mg/l	170	520	250	195	245
Total Volatile Solids, mg/l	70	370	170	95	140
Total Suspended Solids, mg/l	75	376	72	66	119
Total Volatile Suspended Solids, mg/l	56	332	67	61	74
Settleable Solids, ml/l	2.3	2.8	3	4.5	2.8
Floatables, mg/l	6	9.5	5.2	6.9	3.6
Particle Size Distribution, mg/l					
>3.327 mm	-	-	-	-	-
3.327-0.991 mm	-	-	-	-	-
0.991-0.295 mm	-	-	-	-	-
0.295-0.074 mm	-	-	-	-	-
<0.074	-	-	-	-	-
size at 50-percentile by weight, mm	-	-	-	-	-
BOD, mg/l	<10	-	33	35	17
COD, mg/l	96	297	129	144	77
Hexane Extractable Material, mg/l	5.9	54.4	29.5	16.9	7.6
Total Coliforms, MPN/100 ml	1.6×10^7	4.3×10^6	9.3×10^6	2.9×10^6	9.3×10^6
Fecal Coliforms, MPN/100 ml	1.2×10^6	2.3×10^5	1.4×10^5	4.3×10^5	9.1×10^4
Fecal Streptococci, MPN/100 ml	1.4×10^4	4.3×10^4	3.6×10^3	9.1×10^3	$<3 \times 10^3$

20 January 1970

Time	1625	1725	1835	1930	2030
Flow, cfs	1.05	0.605	0.894	0.431	0.556
Total Solids, mg/l	84	84	184	148	60
Total Volatile Solids, mg/l	48	16	68	72	36
Total Suspended Solids, mg/l	29	30	15	33	17
Total Volatile Suspended Solids, mg/l	19	23	14	28	16
Settleable Solids, ml/l	0.2	1.2	0.2	0.2	0.6
Floatables, mg/l	4.2	22.3	3.9	4.7	2.8
Particle Size Distribution, mg/l					
>3.327 mm	0	0	0	0	0
3.327-0.991 mm	0.5	1.6	1.3	2.6	0.9
0.991-0.295 mm	2.1	5.7	2.6	2	1.5
0.295-0.074 mm	6.2	5.1	4	4.2	4.8
<0.074 mm	10.2	17.6	7.1	25.2	9.8
size at 50-percentile by weight, mm	0.065	0.036	0.084	0.01	0.055
BOD, mg/l	21.2	18.2	7.97	30.4	12.7
COD, mg/l	72	127	311	349	43
Hexane Extractable Material, mg/l	2	44	3.8	10.4	5
Total Coliforms, MPN/100 ml	$3x10^4$	$3.6x10^4$	$7.3x10^4$	$3.6x10^4$	$3.6x10^4$
Fecal Coliforms, MPN/100 ml	$<3x10^4$	$3.6x10^4$	$7.3x10^4$	$3.6x10^4$	$3.6x10^4$
Fecal Streptococci, MPN/100 ml	$2.3x10^4$	$2.3x10^4$	$9.1x10^3$	$3.6x10^3$	$7.3x10^3$

Appendix E (continued)

CHARACTERISTICS OF COMBINED SEWAGE
BULK SAMPLE
27 January 1970

Time	0130	0230	0345	0430	0530
Flow, cfs	1.23	0.603	0.176	0.058	0.039
Total Solids, mg/l	95	60	73	72	90
Total Volatile Solids, mg/l	55	32	40	37	43
Total Suspended Solids, mg/l	8	4	6	6	6
Total Volatile Suspended Solids, mg/l	7.5	4	6	5	6
Settleable Solids, ml/l	0.3	0.1	0.2	0.05	0.05
Floatables, mg/l	1.4	1	0.8	0.6	0.9
Particle Size Distribution, mg/l					
>3.327 mm	0	0	0	0	0
3.327-0.991 mm	1.4	0.2	0.2	0.3	2
0.991-0.295 mm	3.7	0.9	1.7	0.5	1.1
0.295-0.074 mm	9.6	2.4	5.5	1.9	1.9
<0.074 mm	12.9	7	3.9	7.9	8
size at 50-percentile by weight, mm	0.082	0.035	0.11	0.023	0.028
BOD, mg/l	3.3	<1.5	4.65	1.95	17.7
COD, mg/l	64	16.9	31	31	52.5
Hexane Extractable Material, mg/l	3.2	3.8	2.6	2	5.4
Total Coliforms, MPN/100 ml	2.3×10^6	9×10^5	9×10^5	4.3×10^6	7×10^5
Fecal Coliforms, MPN/100 ml	4×10^4	$<3 \times 10^3$	$<3 \times 10^5$	$<3 \times 10^5$	$<3 \times 10^5$
Fecal Streptococci, MPN/100 ml	2.3×10^4	4.3×10^4	4×10^3	2.4×10^6	1.5×10^5

13 February 1970

Time	0645	0745	0845	0945	1045
Flow, cfs	1.069	0.199	0.1024	0.0932	0.079
Total Solids, mg/l	148	152	432	552	348
Total Volatile Solids, mg/l	96	72	316	248	156
Total Suspended Solids, mg/l	49	50	127	95	115
Total Volatile Suspended Solids, mg/l	29.5	33	115	80	94
Settleable Solids, ml/l	0.6	2.5	11.5	4	14
Floatables, mg/l	4.65	1.83	3.68	3.36	1.73
Particle Size Distribution, mg/l					
>3.327 mm	0	0	34.2	126	0
3.327-0.991 mm	9.4	11.6	9.8	56	29
0.991-0.295 mm	10.6	24.2	28	47	18
0.295-0.074 mm	42.2	3.4	22.6	43	16
<0.074 mm	33.4	2.6	12.4	78	62
size at 50-percentile by weight, mm	0.116	0.64	0.64	1.12	0.076
BOD, mg/l	21	55.8	139.1	168	121.4
COD, mg/l	88.4	176.8	353.6	402.2	371.3
Hexane Extractable Material, mg/l	12	7.7	20.2	44.1	21.5
Total Coliforms, MPN/100 ml	1.1×10^7	2.4×10^6	2.4×10^6	$>1.1 \times 10^7$	1.1×10^7
Fecal Coliforms, MPN/100 ml	9×10^4	4.3×10^5	2.4×10^6	$>1.1 \times 10^7$	9.3×10^5
Fecal Streptococci, MPN/100 ml	4.3×10^4	4.6×10^5	2.4×10^5	4.6×10^5	9.3×10^4

Appendix E (continued)

CHARACTERISTICS OF COMBINED SEWAGE
BULK SAMPLE
28 February 1970

Time	0835	0935	1035	1130	1230
Flow, cfs	0.422	0.139	0.231	0.155	0.116
Total Solids, mg/l	100	184	264	200	404
Total Volatile Solids, mg/l	52	108	112	90	172
Total Suspended Solids, mg/l	23.6	43.3	31.6	23.3	57
Total Volatile Suspended Solids, mg/l	23.3	40	27.7	20.3	52
Settleable Solids, ml/l	0.3	4.5	0.4	2.6	2.7
Floatables, mg/l	2.2	3.4	1.4	3.5	1.1
Particle Size Distribution, mg/l					
>3.327 mm	0	11.4	-	-	-
3.327-0.991 mm	2.3	9.6	-	-	-
0.991-0.295 mm	3.1	12.5	-	-	-
0.295-0.074 mm	9.3	14.1	-	-	-
<0.074 mm	40.4	38.1	-	-	-
size at 50-percentile by weight, mm	0.021	0.116	-	-	-
BOD, mg/l	16.2	27.3	61	25	199
COD, mg/l	137	157	167	117	292
Hexane Extractable Material, mg/l	5.4	4.1	13	12.2	12
Total Coliforms, MPN/100 ml	4.3×10^5	2.3×10^5	2.3×10^4	9.3×10^5	2.3×10^4
Fecal Coliforms, MPN/100 ml	2.3×10^5	2.3×10^5	9.3×10^3	2.3×10^5	2.3×10^4
Fecal Streptococci, MPN/100 ml	9.1×10^2	3.6×10^4	<30	4.3×10^4	2.4×10^3

4 March 1970

Time	1100	1200	1300	1400	1500
Flow, cfs	0.230	0.124	1.130	1.51	2.22
Total Solids, mg/l	72	100	208	300	352
Total Volatile Solids, mg/l	20	32	76	156	124
Total Suspended Solids mg/l	33.6	43	28.6	144	34
Total Volatile Suspended Solids, mg/l	17	22.3	14.6	110	26.6
Settleable Solids, ml/l	1.2	1.5	0.3	2.7	2.5
Floatables, mg/l	2.2	2.2	1.9	3	5
Particle Size Distribution, mg/l					
>3.327 mm	1.8	1.4	1.1	3.8	3.8
3.327-0.991 mm	0.4	33.2	1.6	2.6	5.1
0.991-0.295 mm	2.6	28.5	4.1	6.7	9.2
0.295-0.074 mm	5.5	17	7.6	11.1	8.9
<0.074 mm	7	22	14	118	36
size at 50-percentile by weight, mm	0.108	0.49	0.076	-	0.036
BOD, mg/l	8.4	8.2	38.8	192	31.2
COD, mg/l	18.8	59.3	115.6	306.3	146.2
Hexane Extractable Material, mg/l	6.4	12.6	33.2	37.4	13.2
Total Coliforms, MPN/100 ml	4.6×10^5	$>1.1 \times 10^6$	4.6×10^5	$>1.1 \times 10^6$	$>1.1 \times 10^6$
Fecal Coliforms, MPN/100 ml	9.3×10^4	1.5×10^5	4.6×10^5	2.4×10^5	2.4×10^5
Fecal Streptococci, MPN/100 ml	4.3×10^3	1.1×10^5	9.1×10^2	1.1×10^5	2.4×10^4

Appendix E (continued)

CHARACTERISTICS OF COMBINED SEWAGE
BULK SAMPLE
13 April 1970

Time	1100	1200	1300	1400	1500
Flow, cfs	0.056	0.043	0.053	0.045	0.042
Total Solids, mg/l	648	512	784	648	472
Total Volatile Solids, mg/l	392	160	392	252	184
Total Suspended Solids, mg/l	168	98	184	138	276
Total Volatile Suspended Solids, mg/l	136	88	162	132	176
Settleable Solids, ml/l	5	15	28	10	8
Floatables, mg/l	14.4	7.8	21.8	11.2	19.6
Particle Size Distribution, mg/l					
>3.327 mm	trace	15	25.1	8.6	22
3.327-0.991 mm	3.1	9.8	37.9	9.4	24.4
0.991-0.295 mm	15.6	12.6	40.3	39.4	21.5
0.295-0.074 mm	3.8	17.3	26.8	25.4	32.6
<0.074 mm	123	45.5	101	90	127
Size at 50-percentile by weight, mm	-	0.15	0.18	0.05	0.01
BOD, mg/l	313	134	178	277	145
COD, mg/l	461	299	236	567	304
Hexane Extractable Material, mg/l	55.3	26.9	83.4	59.7	34.6
Total Coliforms, MPN/100 ml	4.6×10^7	4.6×10^1	1.1×10^7	1.1×10^1	4.6×10^6
Fecal Coliforms, MPN/100 ml	4.6×10^6	9.3×10^5	4.6×10^6	2.4×10^6	1.5×10^6
Fecal Streptococci, MPN/100 ml	1.5×10^5	1.1×10^7	1.1×10^7	4.6×10^6	2.4×10^6

13 May 1970

Time	0430	0530	0630	0730	0830
Flow, cfs	0.022	0.024	0.043	-	0.056
Total Solids, mg/l	412	372	468	748	496
Total Volatile Solids, mg/l	136	104	220	312	216
Total Suspended Solids, mg/l	69.5	60.5	108	484	188
Total Volatile Suspended Solids, mg/l	31.5	31	83	210	138
Settleable Solids, ml/l	0.9	1.5	6	17	10
Floatables, mg/l	2	3.5	0.6	2.2	5.3
Particle Size Distribution, mg/l					
>3.327 mm	-	-	-	-	-
3.327-0.991 mm	5.6	13.5	8.9	21.1	4.4
0.991-0.295 mm	10.3	22.7	15	28.3	18
0.295-0.074 mm	15.6	32.9	30.3	93	47.6
<0.074 mm	13	14	50	72	168
size at 50-percentile by weight, mm	0.20	0.25	0.09	0.15	-
BOD, mg/l	49	60.1	143	224	253
COD, mg/l	254	156	307	723	450
Hexane Extractable Material, mg/l	5.7	6.5	12.5	20.2	37.7
Total Coliforms, MPN/100 ml	4.3×10^{7}	1.1×10^{9}	2.4×10^{8}	1.1×10^{15}	4.6×10^{8}
Fecal Coliforms, MPN/100 ml	3.6×10^{6}	3.6×10^{6}	2.3×10^{7}	1.5×10^{7}	2×10^{7}
Fecal Streptococci, MPN/100 ml	4.3×10^{4}	4.3×10^{6}	9.3×10^{6}	2.3×10^{12}	2.9×10^{6}

Appendix F

CHARACTERISTICS OF COMBINED SEWAGE
0.5-in. SCREEN SAMPLE
4-5 April 1969

Time					
Start	2240	2330	2030	0130	0230
Finish	2310	0000	0100	0200	0300
Flow, cfs					
Start	0.265	0.049	0.508	0.492	0.022
Finish	0.224	0.298	0.872	0.242	0.018
Total Solids, g	24.4	11.4	26	26.3	9.7
Total Volatile Solids, g	20.8	10.1	23.3	24.4	8.9
BOD, mg/g	7.6	1.4	5.8	3.6	1.2
COD, mg/g	27.1	9.7	27.5	21.3	12.7
Hexane Extractable Material, mg/g	2.6	0.48	1.9	1.1	0.42
Total Coliforms, MPN/g	1.3×10^8	1.1×10^7	2.7×10^7	1.3×10^6	1.0×10^6
Fecal Coliforms, MPN/g	2.6×10^6	4.1×10^5	6.5×10^5	5.0×10^5	1.0×10^5
Fecal Streptococci, MPN/g	$<2.8 \times 10^7$	$<8.4 \times 10^5$	$<1.7 \times 10^7$	$<2.9 \times 10^6$	$<2.4 \times 10^3$

0.5-in. SCREEN SAMPLE

5 November 1969

Time					
Start	0530	0630	0730	0830	0930
Finish	0600	0700	0800	0900	1000
Flow, cfs					
Start	0.603	0.595	0.516	0.399	0.058
Finish	0.693	0.509	0.508	0.088	0.055
Total Solids, g	10.4	15.9	30.6	33.7	27.7
Total Volatile Solids, g	9.4	13.9	27.2	30.4	24.5
BOD, mg/g	180	349	603	507	438
COD, mg/g	864	1,428	1,122	1,865	1,200
Hexane Extractable Material, mg/g	59.3	45.2	127	160	142
Total Coliforms, MPN/g	2.21×10^{7}	7.55×10^{7}	3.1×10^{8}	2.8×10^{10}	8.32×10^{7}
Fecal Coliforms, MPN/g	1.42×10^{6}	2.52×10^{6}	4.9×10^{7}	-	3.92×10^{6}
Fecal Streptococci, MPN/g	8.95×10^{6}	2.7×10^{7}	4.9×10^{7}	6.8×10^{7}	1.55×10^{7}

Appendix F (continued)

CHARACTERISTICS OF COMBINED SEWAGE
0.25-in. SCREEN SAMPLE
19 December 1969

Time					
Start	1115	1215	1315	1415	1515
Finish	1145	1240	1340	1440	1540
Flow, cfs					
Start	0.448	0.831	0.117	0.054	0.157
Finish	0.447	0.413	0.073	0.046	0.083
Total Solids, g	8.63	17.72	9.48	9.18	17.42
Total Volatile Solids, g	6.98	15.62	8.08	8.08	14.19
BOD, mg/g	1,008	1,150	1,070	1,898	494
COD, mg/g	1,824	4,720	4,710	2,516	2,039
Hexane Extractable Material, mg/g	67.4	184	286	68	81.5
Total Coliforms, MPN/g	1.74×10^{8}	1.35×10^{8}	1.16×10^{10}	1.2×10^{10}	2.64×10^{9}
Fecal Coliforms, MPN/g	2.6×10^{7}	1.35×10^{8}	1.16×10^{10}	3.16×10^{8}	1.66×10^{8}
Fecal Streptococci, MPN/g	1.7×10^{7}	1.4×10^{7}	2.54×10^{8}	1.6×10^{7}	6.31×10^{8}

0.25-in. SCREEN SAMPLE

21 December 1969

Time					
Start	1000	1100	1200	1340	1415
Finish	1025	1125	1225	1410	1445
Flow, cfs					
Start	0.567	0.164	0.107	0.069	0.075
Finish	0.175	0.169	0.105	0.070	0.075
Total Solids, g	19.40	24.10	18.26	11.56	15.94
Total Volatile Solids, g	17.44	20.36	17.24	10.41	14.96
BOD, mg/g	256	506	924	477	145
COD, mg/g	2,578	3,520	4,849	4,000	1,867
Hexane Extractable Material, mg/g	161	130	236	83.5	151
Total Coliforms, MPN/g	5.66×10^8	1.91×10^8	2.52×10^9	9.51×10^9	5.7×10^8
Fecal Coliforms, MPN/g	3.9×10^7	3.9×10^7	2.4×10^8	1.82×10^9	$<1.8 \times 10^7$
Fecal Streptococci, MPN/g	$>5.7 \times 10^7$	1.91×10^8	5.08×10^8	$<3 \times 10^6$	4×10^7

Appendix F (continued)

CHARACTERISTICS OF COMBINED SEWAGE
1-in. SCREEN SAMPLE
13 January 1970

Time					
Start	1730	1830	1930	2130	2230
Finish	1800	1900	2045	2200	2300
Flow, cfs					
Start	0.247	0.219	0.064	0.130	0.102
Finish	0.685	0.056	0.094	0.095	0.080
Total Solids, g	11.88	15.18	8.14	9.54	7.57
Total Volatile Solids, g	10.26	13.91	7.42	8.93	6.92
BOD, mg/g	1,028	783	937	823	555
COD, mg/g	3,800	5,320	3,035	2,710	1,650
Hexane Extractable Material, mg/g	132	87.6	156	108	132
Total Coliforms, MPN/g	3.62×10^{9}	1.52×10^{9}	1.14×10^{10}	7.96×10^{8}	9.91×10^{7}
Fecal Coliforms, MPN/g	3.03×10^{9}	1.52×10^{8}	1.12×10^{8}	3.78×10^{7}	3.04×10^{7}
Fecal Streptococci, MPN/g	3.62×10^{8}	6.0×10^{7}	4.79×10^{7}	1.57×10^{7}	5.67×10^{6}

1-in. SCREEN SAMPLE

20 January 1970

Time					
Start	1658	1755	1900	2000	2100
Finish	1725	1835	1930	2030	2130
Flow, cfs					
Start	1.18	1.33	0.900	0.454	0.573
Finish	0.605	0.894	0.431	0.556	1.11
Total Solids, g	28.4	17.6	26.2	77	51.8
Total Volatile Solids, g	25.1	15.9	23	64.5	44.3
BOD, mg/g	545	346	186	525	425
COD, mg/g	1,140	5,490	5,470	2,485	1,206
Hexane Extractable Material, mg/g	117	26.5	44.1	87.6	68
Total Coliforms, MPN/g	2.88×10^8	1.36×10^8	3.56×10^8	1.43×10^8	$<5.79 \times 10^5$
Fecal Coliforms, MPN/g	$<1.06 \times 10^7$	4.16×10^7	5.74×10^7	5.97×10^7	$<5.79 \times 10^5$
Fecal Streptococci, MPN/g	1.52×10^8	2.04×10^7	1.38×10^7	1.43×10^7	1.80×10^6

Appendix F (continued)

CHARACTERISTICS OF COMBINED SEWAGE
0.125-in. SCREEN SAMPLE
27 January 1970

Time					
Start	0158	0314	0400	0500	0600
Finish	0216	0345	0430	0530	0630
Flow, cfs					
Start	1.79	0.416	0.268	0.051	0.040
Finish	0.763	0.176	0.058	0.039	0.050
Total Solids, g	19.7	11.1	7.4	8.4	5
Total Volatile Solids, g	17.1	9.9	6.5	7.8	4.6
BOD, mg/g	370	341	402	299	877
COD, mg/g	1,980	552	3,890	464	1,188
Hexane Extractable Material, mg/g	49	59.4	66.3	21.6	76.8
Total Coliforms, MPN/g	2.44×10^9	3.88×10^8	2.74×10^8	2.50×10^8	4.2×10^9
Fecal Coliforms, MPN/g	7.63×10^7	8.11×10^6	2.02×10^7	$<3.6 \times 10^4$	$<6 \times 10^4$
Fecal Streptococci, MPN/g	7.6×10^3	3.96×10^4	3.11×10^4	1.11×10^4	7.8×10^4

0.125-in. SCREEN SAMPLE

13 February 1970

Time					
Start	0710	0815	0915	1015	1110
Finish	0715	0825	0930	1025	1120
Flow, cfs					
Start	0.728	0.1545	0.0872	0.0932	0.1374
Finish	0.199	0.1024	0.0932	0.079	0.079
Total Solids, g	17.9	51.2	22.5	9.7	11.1
Total Volatile Solids, g	14.5	43.3	20	8.8	8.6
BOD, mg/g	386	234	-	124	892
COD, mg/g	1,339	1,312	503	1,859	3,265
Hexane Extractable Material, mg/g	13.7	74.8	69.5	75.7	38.8
Total Coliforms, MPN/g	8.4×10^8	2.9×10^9	1.9×10^8	2.48×10^9	8.4×10^8
Fecal Coliforms, MPN/g	1.7×10^7	5.9×10^6	4×10^7	2.4×10^8	2.1×10^8
Fecal Streptococci, MPN/g	1.3×10^6	$>2.15 \times 10^7$	1.9×10^6	9.6×10^6	1.35×10^7

Appendix F (continued)

CHARACTERISTICS OF COMBINED SEWAGE
1-in. SCREEN SAMPLE
28 February 1970

Time					
Start	0900	1000	1100	1200	1300
Finish	0930	1030	1130	1230	1330
Flow, cfs					
Start	0.570	0.111	0.195	0.109	0.116
Finish	0.139	0.231	0.155	0.116	0.011
Total Solids, g	41.4	44.3	33.5	12	20
Total Volatile Solids, g	36.9	39.9	29.7	11.16	17.9
BOD, mg/g	309	184	453	761	338
COD, mg/g	976	529	1,039	1,368	1,119
Hexane Extractable Material, mg/g	128	68.1	-	44.9	156
Total Coliforms, MPN/g	1.04×10^8	9.61×10^7	1.37×10^9	3.58×10^8	1.2×10^9
Fecal Coliforms, MPN/g	1.04×10^8	2.06×10^7	1.37×10^9	1.95×10^8	1.2×10^9
Fecal Streptococci, MPN/g	2.66×10^8	1.02×10^8	1.37×10^8	7.59×10^6	7.5×10^6

0.5-in. SCREEN SAMPLE

4 March 1970

Time					
Start	1130	1230	1330	1430	1530
Finish	1200	1300	1400	1500	1600
Flow, cfs					
Start	0.238	0.262	1.33	1.80	2.28
Finish	0.124	1.130	1.51	2.22	2.66
Total Solids, g	29.1	23.4	38.7	23.2	15
Total Volatile Solids, g	25.3	21	34.7	20.9	13.1
BOD, mg/g	443	154	321	377	295
COD, mg/g	1,420	423	1,460	1,490	659
Hexane Extractable Material, mg/g	106	97	145	102	90
Total Coliforms, MPN/g	7.9×10^7	1.54×10^7	2.47×10^8	1.85×10^8	6.1×10^7
Fecal Coliforms, MPN/g	7.9×10^7	1.54×10^7	2.47×10^8	9.9×10^7	$< 2 \times 10^7$
Fecal Streptococci, MPN/g	8.25×10^6	3.9×10^5	2.47×10^7	9.9×10^6	6.07×10^6

Appendix F (continued)

CHARACTERISTICS OF COMBINED SEWAGE
0.125-in. SCREEN SAMPLE
13 April 1970

Time					
Start	1130	1230	1330	1430	1530
Finish	1200	1300	1400	1500	1600
Flow, cfs					
Start	0.041	0.029	0.061	0.0278	0.030
Finish	0.043	0.053	0.045	0.042	0.027
Total Solids, g	27.4	32.8	27.9	16.8	18.1
Total Volatile Solids, g	22.2	28.1	24.2	12.8	12.6
BOD, mg/g	429	729	623	584	586
COD, mg/g	1,110	1,345	1,280	3,010	1,518
Hexane Extractable Material, mg/g	147	140	171	149	113
Total Coliforms, MPN/g	5.8×10^7	1.9×10^9	1×10^9	7.8×10^7	1.7×10^5
Fecal Coliforms, MPN/g	1.9×10^7	3.4×10^9	2.2×10^7	7.3×10^6	3.6×10^6
Fecal Streptococci, MPN/g	1.1×10^5	1.9×10^9	4×10^7	3.9×10^7	1.4×10^8

0.25-in. SCREEN SAMPLE

13 May 1970

Time					
Start	0500	0600	0700	0800	0900
Finish	0530	0630	0730	0830	0930
Flow, cfs					
Start	0.024	0.021	-	0.055	0.080
Finish	0.022	0.043	-	0.056	-
Total Solids, g	5.99	14.61	69.58	110.88	104.24
Total Volatile Solids, g	5.57	13.42	57.08	84.01	89.64
BOD, mg/g	1,047	707	521	569	272
COD, mg/g	2,315	1,608	1,237	10,800	786
Hexane Extractable Material, mg/g	13.8	129.7	82.2	100.6	133.5
Total Coliforms, MPN/g	7.18×10^{7}	7.52×10^{8}	6.89×10^{7}	1.99×10^{14}	8.84×10^{7}
Fecal Coliforms, MPN/g	6.01×10^{6}	2.46×10^{6}	6.51×10^{6}	2.71×10^{7}	3.82×10^{6}
Fecal Streptococci, MPN/g	7.18×10^{4}	2.94×10^{6}	2.67×10^{6}	4.57×10^{11}	5.56×10^{5}

APPENDIX G

CORRELATIONS BETWEEN COMBINED SEWAGE BULK CONSTITUENTS
10 Storms

X	Y	Equation Form[a]	Equation Coefficient A	Equation Coefficient B	Correlation Coefficient	No. of Data	Significance: Equation Coefficient[b]	Significance: Correlation Coefficient[c]
TS	TVS	3	0.261	1.11	0.934	50	Yes	Yes
TS	TSS	3	0.0708	1.24	0.808	50	Yes	No
TS	TVSS	3	0.0370	1.31	0.839	50	Yes	No
TS	SS	3	5.16×10^{-4}	1.50	0.651	45	Yes	No
TS	F	6	35.5	0.187	0.439	45	Yes	No
TS	BOD	1	-27.5	0.370	0.862	47	Yes	No
TS	COD	3	0.326	1.13	0.849	50	Yes	No
TS	HEM	2	3.17	0.00425	0.609	50	Yes	No
TS	TC	1	4.89×10^{5}	1.20×10^{4}	0.397	46	Yes	No
TS	FC	3	3.59×10^{2}	0.0116	0.320	43	Yes	No
TS	FS	2	9.71×10^{3}	0.00368	0.270	39	No	No
TVS	TSS	1	-17.9	0.813	0.889	50	Yes	No
TVS	TVSS	1	-23.0	0.715	0.898	50	Yes	Yes
TVS	SS	3	0.00710	1.16	0.574	45	Yes	No
TVS	F	5	0.566	-0.00132	0.303	45	Yes	No
TVS	BOD	3	0.0775	1.33	0.844	47	Yes	No

TVS	COD	3	2.01	0.915	0.815	50	Yes	No
TVS	HEM	2	4.16	0.00587	0.532	50	Yes	No
TVS	TC	1	7.99×10^{5}	2.04×10^{4}	0.450	46	Yes	No
TVS	FC	3	2.81×10^{3}	0.901	0.313	43	Yes	No
TVS	FS	2	1.11×10^{4}	0.00617	0.262	39	No	No
TSS	TVSS	1	-6.20	0.864	0.991	50	Yes	Yes
TSS	SS	6	65.5	-0.209	0.788	45	Yes	No
TSS	F	6	4.65	0.244	0.736	45	Yes	No
TSS	BOD	3	0.506	1.05	0.811	47	Yes	No
TSS	COD	3	10.1	0.636	0.734	50	Yes	No
TSS	HEM	3	1.09	0.523	0.549	50	Yes	No
TSS	TC	1	1.24×10^{6}	2.47×10^{4}	0.511	46	Yes	No
TSS	FC	4	9.90×10^{5}	-1.25×10^{7}	0.293	43	No	No
TSS	FS	4	3.14×10^{4}	2.25×10^{6}	0.316	39	Yes	No
TVSS	SS	6	64.2	-0.783	0.802	45	Yes	No
TVSS	F	6	4.44	0.209	0.729	45	Yes	No
TVSS	BOD	3	0.613	1.10	0.863	47	Yes	No
TVSS	COD	3	10.6	0.680	0.796	50	Yes	No
TVSS	HEM	3	1.18	0.549	0.584	50	Yes	No
TVSS	TC	1	1.46×10^{6}	2.76×10^{4}	0.499	46	Yes	No
TVSS	FC	3	9.72×10^{3}	0.764	0.315	43	Yes	No
TVSS	FS	4	-4.57×10^{3}	2.48×10^{6}	0.358	39	Yes	No
SS	F	6	0.0528	0.302	0.694	45	Yes	No

APPENDIX G (continued)

X	Y	Form[a]	Equation Coefficient	Equation Coefficient	Correlation Coefficient	No. of Data	Significance Equation Coefficient[b]	Significance Correlation Coefficient[c]
SS	BOD	6	0.0130	0.0353	0.610	42	Yes	No
SS	COD	3	1.11×10^{2}	0.275	0.476	45	Yes	No
SS	HEM	3	8.00	0.261	0.396	45	Yes	No
SS	TC	2	4.93×10^{5}	0.202	0.345	41	Yes	No
SS	FC	1	3.06×10^{5}	1.44×10^{5}	0.423	38	Yes	No
SS	FS	4	-2.06×10^{3}	4.96×10^{4}	0.582	39	Yes	No
F	BOD	6	0.186	-0.0148	0.658	42	Yes	No
F	COD	6	0.0189	0.00408	0.518	45	Yes	No
F	HEM	1	6.10	1.78	0.478	45	Yes	No
F	TC	4	3.60×10^{6}	-1.83×10^{6}	0.170	41	No	No
F	FC	1	8.26×10^{5}	-2.71×10^{4}	0.088	38	No	No
F	FS	4	-1.51×10^{5}	6.50×10^{5}	0.574	39	Yes	No
BOD	COD	3	15.6	0.605	0.858	47	Yes	No
BOD	HEM	3	1.57	0.484	0.616	47	Yes	No
BOD	TC	1	1.47×10^{6}	2.53×10^{4}	0.370	43	Yes	No
BOD	FC	3	7.05×10^{3}	0.901	0.452	41	Yes	No
BOD	FS	4	-6.77×10^{4}	2.86×10^{6}	0.681	36	Yes	No
COD	HEM	3	0.341	0.665	0.605	50	Yes	No

COD	TC	1	1.77×10^{6}	7.54×10^{3}	0.247	46	No	No
COD	FC	3	1.21×10^{3}	1.00	0.362	43	Yes	No
COD	FS	2	1.35×10^{4}	0.00267	0.191	39	No	No
HEM	TC	4	3.93×10^{6}	-5.06×10^{6}	0.221	46	No	No
HEM	FC	3	6.03×10^{4}	0.433	0.179	43	No	No
HEM	FS	4	-4.77×10^{4}	1.11×10^{6}	0.356	39	Yes	No
TC	FC	3	3.72×10^{2}	0.438	0.376	40	Yes	No
TC	FS	3	1.52×10^{2}	0.349	0.367	35	Yes	No
FC	FS	1	3.28×10^{4}	0.0414	0.426	32	Yes	No

[a] 1. $Y=A+B$; 2. $Y=A \exp(BX)$; 3. $Y=AX^{B}$; 4. $Y=A+(B/X)$; 5. $Y=1/(A+BX)$; 6. $Y=X/(A+BX)$

[b] F-statistic significant at the 95-% confidence level

[c] χ^2-statistic significant at the 95-% confidence level

APPENDIX H

CORRELATIONS BETWEEN COMBINED SEWAGE PARTICLE SIZE AND BULK CONSTITUENTS

10 Storms

X	Y	Equation Form[a]	Equation Coefficient A	Equation Coefficient B	Correlation Coefficient	No. of Data	Significance: Equation Coefficient[b]	Significance: Correlation Coefficient[c]
SS/TSS	PS	3	0.824	0.597	0.479	34	Yes	No
F/TSS	PS	3	0.0175	-0.661	0.498	34	Yes	No
BOD/TVS	PS	3	0.147	0.386	0.234	33	No	No
COD/TVS	PS	5	9.57	4.90	0.356	34	Yes	No
HEM/TVS	PS	6	20.6	-0.157	0.125	34	No	No
TC/TVS	PS	6	11.9	2.13×10^{4}	0.611	31	Yes	No
FC/TVS	PS	6	7.49	1.83×10^{4}	0.543	28	Yes	No
FS/TVS	PS	5	18.1	3.43×10^{-4}	0.193	30	No	No

[a] 1. $Y=A+B$; 2. $Y=A \exp(BX)$; 3. $Y=AX^{B}$; 4. $Y=A+(B/X)$; 5. $Y=1/(A+BX)$; 6. $Y=X/(A+BX)$

[b] F-statistic significant at the 95-% confidence level

[c] χ^2-statistic significant at the 95-% confidence level

APPENDIX I

CORRELATIONS BETWEEN COMBINED SEWAGE SCREENINGS CONSTITUENTS
10 Storms

X	Y	Form[a]	Equation Coefficient A	Equation Coefficient B	Correlation Coefficient	No. of Data	Significance Equation Coefficient[b]	Significance Correlation Coefficient[c]
TS	TVS	1	0.526	0.856	0.998	50	Yes	Yes
TS	BOD	4	2.49×10^{2}	3.53×10^{3}	0.370	49	Yes	No
TS	COD	1	2.35×10^{3}	-19.2	0.170	50	No	No
TS	HEM	5	0.230	-0.00421	0.127	49	No	No
TS	TC	3	1.95×10^{9}	-0.600	0.160	49	No	No
TS	FC	4	-1.90×10^{8}	1.10×10^{10}	0.197	41	No	No
TS	FS	3	2.35×10^{5}	1.29	0.283	42	No	No
TVS	BOD	4	2.32×10^{2}	3.36×10^{3}	0.391	49	Yes	No
TVS	COD	1	2.38×10^{3}	-23.6	0.179	50	No	No
TVS	HEM	5	0.229	-0.00476	0.123	49	No	No
TVS	TC	3	2.05×10^{9}	-0.644	0.171	49	No	No
TVS	FC	4	-2.54×10^{8}	1.06×10^{10}	0.215	41	No	No
TVS	FS	3	2.84×10^{5}	1.28	0.279	42	No	No
BOD	COD	6	0.120	0.00160	0.956	49	Yes	Yes
BOD	HEM	6	2.90	0.00840	0.999	48	Yes	Yes

APPENDIX I (Continued)

X	Y	Form[a]	Equation Coefficient A	Equation Coefficient B	Correlation Coefficient	No. of Data	Significance Equation Coefficient[b]	Significance Correlation Coefficient[c]
BOD	TC	6	8.32×10^{-7}	6.41×10^{-9}	0.749	48	Yes	No
BOD	FC	6	8.24×10^{-6}	1.13×10^{-9}	0.884	40	Yes	No
BOD	FS	2	3.59×10^{6}	0.00181	0.230	41	No	No
COD	HEM	6	22.1	-0.0166	0.960	49	Yes	Yes
COD	TC	3	7.55×10^{5}	0.887	0.659	49	Yes	No
COD	FC	6	5.52×10^{-5}	-1.26×10^{-8}	0.744	41	Yes	No
COD	FS	3	3.08×10^{3}	1.09	0.359	42	Yes	No
HEM	TC	6	2.90×10^{-7}	3.70×10^{-9}	0.757	48	Yes	No
HEM	FC	6	2.82×10^{-6}	-1.56×10^{-8}	0.878	40	Yes	No
HEM	FS	2	7.24×10^{5}	0.0250	0.507	41	Yes	No
TC	FC	6	7.29	6.48×10^{-8}	0.870	41	Yes	No
TC	FS	2	7.68×10^{6}	1.08×10^{-10}	0.199	41	No	No
FC	FS	3	6.56×10^{2}	0.549	0.394	34	Yes	No

[a] 1. $Y=A+B$; 2. $Y=A \exp(BX)$; 3. $Y=AX^{B}$; 4. $Y=A+(B/X)$; 5. $Y=1/(A+BX)$; 6. $Y=X/(A+BX)$

[b] F-statistic significant at the 95-% confidence level

[c] χ^2-statistic significant at the 95-% confidence level

BIBLIOGRAPHIC: Envirogenics Company, In-Sewer Fixed Screening of Combined Sewer Overflows, FWQA Publication No. 11024FKJ10/70

ABSTRACT: A field sampling and analysis program, supplemented with laboratory studies, was conducted to characterize combined sewage contributary to combined sewer overflows, to ascertain the removal of floatables and solid materials that could be effected by the placement of screening devices in combined sewer systems, and to assess the effect of solids removal on chlorination requirements and bacterial concentrations. Statistics are presented on combined sewage bulk and screenings collected with 0.125-, 0.25-, 0.5-, and 1.0-in. aperture screens for the following constituents (where meaningful): total solids, total volatile solids, total suspended solids, total volatile suspended solids, settleable solids, floatable solids, particle size distribution, biochemical oxygen demand, chemical oxygen demand, hexane extractable material, total coliforms, fecal coliforms, and fecal streptococci. Regression analyses were performed between all observed combined sewage bulk and screenings constituent pairs. Statistically significant correlations at the 95-% confidence level were obtained for the combined sewage bulk only between total solids and total volatile solids, between total volatile solids and total volatile suspended solids, and between total suspended solids and total volatile suspended solids. For combined sewage screenings, statistically significant correlations at the 95-% confidence level were found between total solids and total volatile solids, between BOD and COD, between BOD and hexane extractable material, and between COD and hexane extractable material. Removals of total solids, total volatile solids, biochemical oxygen demand, chemical oxygen demand, hexane extractable material, total coliforms, fecal coliforms, and fecal streptococci resulting from placement of the screening devices into the combined sewer were calculated and were marginal.

KEY WORDS

Combined sewage

Combined sewer overflows

Combined sewage treatment

Combined sewage characteristics

Fixed screens

Solids removal

BIBLIOGRAPHIC: Envirogenics Company, In-Sewer Fixed Screening of Combined Sewer Overflows, FWQA Publication No. 11024FKJ10/70

ABSTRACT: A field sampling and analysis program, supplemented with laboratory studies, was conducted to characterize combined sewage contributary to combined sewer overflows, to ascertain the removal of floatables and solid materials that could be effected by the placement of screening devices in combined sewer systems, and to assess the effect of solids removal on chlorination requirements and bacterial concentrations. Statistics are presented on combined sewage bulk and screenings collected with 0.125-, 0.25-, 0.5-, and 1.0-in. aperture screens for the following constituents (where meaningful): total solids, total volatile solids, total suspended solids, total volatile suspended solids, settleable solids, floatable solids, particle size distribution, biochemical oxygen demand, chemical oxygen demand, hexane extractable material, total coliforns, fecal coliforms, and fecal streptococci. Regression analyses were performed between all observed combined sewage bulk and screenings constituent pairs. Statistically significant correlations at the 95-% confidence level were obtained for the combined sewage bulk only between total solids and total volatile solids, between total volatile solids and total volatile suspended solids, and between total suspended solids and total volatile suspended solids. For combined sewage screenings, statistically significant correlations at the 95-% confidence level were found between total solids and total volatile solids, between BOD and COD, between BOD and hexane extractable material, and between COD and hexane extractable material. Removals of total solids, total volatile solids, biochemical oxygen demand, chemical oxygen demand, hexane extractable material, total coliforms, fecal coliforms, and fecal streptococci resulting from placement of the screening devices into the combined sewer were calculated and were marginal.

KEY WORDS

Combined sewage

Combined sewer overflows

Combined sewage treatment

Combined sewage characteristics

Fixed screens

Solids removal

BIBLIOGRAPHIC: Envirogenics Company, In-Sewer Fixed Screening of Combined Sewer Overflows, FWQA Publication No. 11024FKJ10/70

ABSTRACT: A field sampling and analysis program, supplemented with laboratory studies, was conducted to characterize combined sewage contributary to combined sewer overflows, to ascertain the removal of floatables and solid materials that could be effected by the placement of screening devices in combined sewer systems, and to assess the effect of solids removal on chlorination requirements and bacterial concentrations. Statistics are presented on combined sewage bulk and screenings collected with 0.125-, 0.25-, 0.5-, and 1.0-in. aperture screens for the following constituents (where meaningful): total solids, total volatile solids, total suspended solids, total volatile suspended solids, settleable solids, floatable solids, particle size distribution, biochemical oxygen demand, chemical oxygen demand, hexane extractable material, total coliforms, fecal coliforms, and fecal streptococci. Regression analyses were performed between all observed combined sewage bulk and screenings constituent pairs. Statistically significant correlations at the 95-% confidence level were obtained for the combined sewage bulk only between total solids and total volatile solids, between total volatile solids and total volatile suspended solids, and between total suspended solids and total volatile suspended solids. For combined sewage screenings, statistically significant correlations at the 95-% confidence level were found between total solids and total volatile solids, between BOD and COD, between BOD and hexane extractable material, and between COD and hexane extractable material. Removals of total solids, total volatile solids, biochemical oxygen demand, chemical oxygen demand, hexane extractable material, total coliforms, fecal coliforms, and fecal streptococci resulting from placement of the screening devices into the combined sewer were calculated and were marginal.

KEY WORDS

Combined sewage

Combined sewer overflows

Combined sewage treatment

Combined sewage characteristics

Fixed screens

Solids removal

Fixed screening of combined sewage with aperture sizes ranging from 0.0164 to 1.0 in. appear to have little, if any, effect on total coliform and fecal coliform densities or bacterial kills by chlorination. Chlorination requirements for combined sewage subjected to fixed screening at different practical aperture sizes were reduced only slightly.
This report was submitted in fulfillment of Contract No. 14-12-180 and Program No. 11024 FKJ between the Federal Water Quality Administration and the Aerojet-General Corporation.

Fixed screening of combined sewage with aperture sizes ranging from 0.0164 to 1.0 in. appear to have little, if any, effect on total coliform and fecal coliform densities or bacterial kills by chlorination. Chlorination requirements for combined sewage subjected to fixed screening at different practical aperture sizes were reduced slightly.
This report was submitted in fulfillment of Contract No. 14-12-180 and Program No. 11024 FKJ between the Federal Water Quality Administration and the Aerojet-General Corporation.

Fixed screening of combined sewage with aperture sizes ranging from 0.0164 to 1.0 in. appear to have little, if any, effect on total coliform and fecal coliform densities or bacterial kills by chlorination. Chlorination requirements for combined sewage subjected to fixed screening at different practical aperture sizes were reduced only slightly.
This report was submitted in fulfillment of Contract No. 14-12-180 and Program No. 11024 FKJ between the Federal Water Quality Administration and the Aerojet-General Corporation.

1 Accession Number	2 Subject Field & Group	SELECTED WATER RESOURCES ABSTRACTS INPUT TRANSACTION FORM

5 Organization

Envirogenics Company, El Monte, California

6 Title

In-Sewer Fixed Screening of Combined Sewer Overflows

10 Author(s)	16 Project Designation
Feuerstein, D. L.	FWQA Program 11024 FKJ Contract 14-12-180
	21 Note

22 Citation

23 Descriptors (Starred First)

Waste water treatment, municipal wastewater, storm runoff, sewers, combined sewage, combined sewer overflows, combined sewage treatment, combined sewage characteristics, fixed screens, solids removal.

25 Identifiers (Starred First)

27 Abstract A field sampling and analysis program, supplemented with laboratory studies, was conducted to characterize combined sewage contributary to combined sewer overflows, ascertain the removal of floatables and solid materials that could be effected by the placement of screening devices in combined sewer systems, and assess the effect of solids removal on chlorination requirements and bacterial concentrations. Statistics are presented on combined sewage bulk and screenings collected with 0.125-, 0.25-, 0.5-, and 1.0-in. aperture screens. Statistically significant correlations at the 95-% confidence level were obtained for the combined sewage bulk only between total solids and total volatile solids, between total volatile solids and total volatile suspended solids, and between total suspended solids and total volatile suspended solids. For combined sewage screenings, statistically significant correlations at the 95-% confidence level were found between total solids and total volatile solids, between BOD and COD, between BOD and hexane extractable material, and between COD and hexane extractable material. Removals of total solids, total volatile solids, biochemical oxygen demand, chemical oxygen demand, hexane extractable material, total coliforms, fecal coliforms, and fecal streptococci resulting from placement of the screening devices into the combined sewer were marginal. Fixed screening of combined sewage with aperture sizes ranging from 0.0164 to 1.0 in. appear to have little, if any, effect on total coliform and fecal coliform densities or bacterial kills by chlorination with chlorination requirements being reduced only slightly.

Abstractor	Institution
D. L. Feuerstein	Envirogenics Company

Continued from inside front cover....

11022 --- 08/67	Phase I - Feasibility of a Periodic Flushing System for Combined Sewer Cleaning
11023 --- 09/67	Demonstrate Feasibility of the Use of Ultrasonic Filtration in Treating the Overflows from Combined and/or Storm Sewers
11020 --- 12/67	Problems of Combined Sewer Facilities and Overflows, 1967, (WP-20-11)
11023 --- 05/68	Feasibility of a Stabilization-Retention Basin in Lake Erie at Cleveland, Ohio
11031 --- 08/68	The Beneficial Use of Storm Water
11030 DNS 01/69	Water Pollution Aspects of Urban Runoff, (WP-20-15)
11020 DIH 06/69	Improved Sealants for Infiltration Control, (WP-20-18)
11020 DES 06/69	Selected Urban Storm Water Runoff Abstracts, (WP-20-21)
11020 --- 06/69	Sewer Infiltration Reduction by Zone Pumping, (DAST-9)
11020 EXV 07/69	Strainer/Filter Treatment of Combined Sewer Overflows, (WP-20-16)
11020 DIG 08/69	Polymers for Sewer Flow Control, (WP-20-22)
11023 DPI 08/69	Rapid-Flow Filter for Sewer Overflows
11020 DGZ 10/69	Design of a Combined Sewer Fluidic Regulator, (DAST-13)
11020 EKO 10/69	Combined Sewer Separation Using Pressure Sewers, (ORD-4)
11020 --- 10/69	Crazed Resin Filtration of Combined Sewer Overflows, (DAST-4)
11024 FKN 11/69	Storm Pollution and Abatement from Combined Sewer Overflows-Bucyrus, Ohio, (DAST-32)
11020 DWF 12/69	Control of Pollution by Underwater Storage
11000 --- 01/70	Storm and Combined Sewer Demonstration Projects - January 1970
11020 FKI 01/70	Dissolved Air Flotation Treatment of Combined Sewer Overflows, (WP-20-17)
11024 DOK 02/70	Proposed Combined Sewer Control by Electrode Potential
11023 FDD 03/70	Rotary Vibratory Fine Screening of Combined Sewer Overflows, (DAST-5)
11024 DMS 05/70	Engineering Investigation of Sewer Overflow Problem - Roanoke, Virginia
11023 EVO 06/70	Microstraining and Disinfection of Combined Sewer Overflows
11024 --- 06/70	Combined Sewer Overflow Abatement Technology