May 1982

MPTER-DS: THE MPTER MODEL INCLUDING DEPOSITION AND SEDIMENTATION

IAG-AD-13-F-0177-0

ENVIRONMENTAL SCIENCES RESEARCH LABORATORY
OFFICE OF RESEARCH AND DEVELOPMENT
U.S. ENVIRONMENTAL PROTECTION AGENCY
RESEARCH TRIANGLE PARK, NORTH CAROLINA 27711

MPTER-DS: THE MPTER MODEL INCLUDING DEPOSITION AND SEDIMENTATION

User's Guide

by

K. Shankar Rao and Lynne Satterfield
Atmospheric Turbulence and Diffusion Laboratory
National Oceanic and Atmospheric Administration
Oak Ridge, Tennessee 37830

IAG-AD-13-F-0177-0

Project Officer

Jack H. Shreffler
Meteorology and Assessment Division
Environmental Sciences Research Laboratory
Research Triangle Park, North Carolina 27711

ENVIRONMENTAL SCIENCES RESEARCH LABORATORY
OFFICE OF RESEARCH AND DEVELOPMENT
U.S. ENVIRONMENTAL PROTECTION AGENCY
RESEARCH TRIANGLE PARK, NORTH CAROLINA 27711

DISCLAIMER

This report has been reviewed by the Environmental Sciences Research Laboratory, U.S. Environmental Protection Agency, and approved for publication. Approval does not signify that the contents necessarily reflect the views and policies of the U.S. Environmental Protection Agency, nor does mention of trade names or commercial products constitute endorsement or recommendation for use.

ABSTRACT

MPTER is the designation for a multiple point source algorithm with terrain adjustments. The diffusion algorithm is based upon Gaussian plume modeling assumptions. The MPTER model can be used for estimating air pollutant concentrations from multiple sources in rural environments. The model has technical input options for terrain adjustment, stack downwash, gradual plume rise, and buoyancy-induced dispersion, and a great variety of output options. The MPTER model, therefore, may be considered a research tool for exploratory use of various assumptions and parameter values.

This report is a User's Guide to MPTER-DS model which can explicitly account for dry deposition of gaseous and suspended particulate pollutants in the plume. The MPTER-DS model utilizes the Gaussian plume-type diffusion-deposition algorithms based on analytical solutions of a gradient-transfer model. These algorithms are easy to apply and, in the limit when pollutant settling and deposition velocities are zero, they reduce to the usual Gaussian plume diffusion algorithms in the MPTER model.

This report outlines the modifications of the MPTER computer program to include deposition. The information is oriented to the model user and the programmer. This report is not a complete User's Guide to the MPTER-DS model; it should be used as a supplement to the original User's Guide for MPTER.

This report was submitted in partial fulfillment of Interagency Agreement No. AD-13-F-0177-0 by NOAA's Atmospheric Turbulence and Diffusion Laboratory. This work, covering the period September 1980 to September 1981, was completed as of September 30, 1981.

CONTENTS

Abstract iii

Figures and Tables vi

Acknowledgements vii

1. Introduction 1

2. Overview of Computer Program 3

Structure of the program 3

General flow of the model 5

Description of new subroutines 6

3. Preparation of Input Data 7

4. Example Problems 10

References 70

Appendix

Diffusion algorithms in MPTER-DS model
with settling and deposition effects 71

FIGURES

Number		Page
1	Structure of subroutines in MPTER-DS program	4

TABLES

Number		Page
1	MPTER card type 15 - deposition	8
2	Input data for Example Problem 1	14
3	Computer listing of output for Example Problem 1	15
4	Input data for Example Problem 2	19
5	Computer listing of output for Example Problem 2	20
6	Input data for Example Problem 3	27
7	Computer listing of output for Example Problem 3	29

ACKNOWLEDGEMENTS

This report was prepared for the Office of Research and Development, Environmental Sciences Research Laboratory of the U.S. Environmental Protection Agency to support the needs of EPA's Office of Toxic Substances. This work was accomplished under interagency agreements among the U.S. Department of Energy, the National Oceanic and Atmospheric Administration, and the EPA. The authors are grateful to Dr. Jack Shreffler of ESRL for the opportunity to do this work, and for his interest and support, and Mr. Thomas Pierce of ESRL for providing the model test input data. The authors also express their appreciation to Ms. Erma Yates for expert typing and patient revisions.

SECTION 1

INTRODUCTION

MPTER is the designation for a multiple point source diffusion model with terrain adjustments. MPTER's diffusion algorithm is based upon Gaussian plume modeling assumptions, and is most applicable to source-receptor distances less than 10 km in level or rolling terrain. In the MPTER model described by Pierce and Turner (1980), the algorithm can be used for estimating concentrations of non-reactive pollutants at a maximum of 180 receptors, for averaging times of 1 hour to 1 year, from a maximum of 250 point sources. Calculations are performed for each hour using that hour's meteorological data. The optional terrain adjustment can be applied only to receptors whose elevation is no higher than the lowest stack top elevation of the sources considered. Additional technical options are available for stack downwash, gradual plume rise, and buoyancy-induced dispersion. All output is controlled by the user through selection of options. The versatility of MPTER allows it to be used as a tool for research, as well as for routine impact analyses.

Rao (1981) gave analytical solutions of a gradient-transfer model for dry deposition of gaseous and particulate pollutants from a plume. These new diffusion-deposition algorithms were presented as analytical extensions of the Gaussian plume diffusion algorithms currently used in EPA models

under various atmospheric stability and mixing conditions. The analytical gradient-transfer model treats gravitational settling and dry deposition of pollutant in a physically realistic and straightforward manner, and it is subject to the same basic assumptions and limitations associated with all Gaussian plume-type models. For details of the model and the solutions, the user is referred to Rao (1981).

This report is a User's Guide to the MPTER-DS model that utilizes the plume diffusion-deposition algorithms given by Rao (1981). In the limit when pollutant settling and dry deposition velocities are zero, these expressions reduce to the Gaussian plume diffusion algorithms of the original MPTER model (Pierce and Turner, 1980). This report outlines the modifications of the MPTER computer program to include deposition. Most of the information is oriented to the model user and the programmer: overview of computer program (Section 2), preparation of input data (Section 3), example problems (Section 4), and diffusion-deposition algorithms (Appendix) of the MPTER-DS Program.

It should be emphasized here that this report is not a complete User's Guide for the MPTER-DS model. It is meant to be used together with the original User's Guide for MPTER (Pierce and Turner, 1980).

SECTION 2

OVERVIEW OF COMPUTER PROGRAM

The modification of the MPTER computer program to include gravitational settling and/or deposition effects has been carried out with as few code changes as necessary. The structure of the MPTER-DS program subroutines, the general flow of the model, and a brief description of only those subroutines not listed in the original User's Guide for MPTER (Pierce and Turner, 1980) are given in this section.

STRUCTURE OF THE PROGRAM

Figure 1 shows the structure of the MPTER-DS program. MPTER is the main routine; it reads and writes input data, initializes variables, determines significant sources, calls PTR for point source concentrations, stores output on tapes/discs, and calls OUTHR to print output concentrations and summary tables. If gravitational settling and/or deposition loss of pollutant are considered, PTR calls RCPD for relative concentrations; if not, PTR calls RCP. An additional output optionally available in the MPTER-DS program is a table of surface deposition flux in units of kg/km^2-hour, calculated only at receptors which are not higher than 1 meter above the local ground-level elevation. These flux cal-

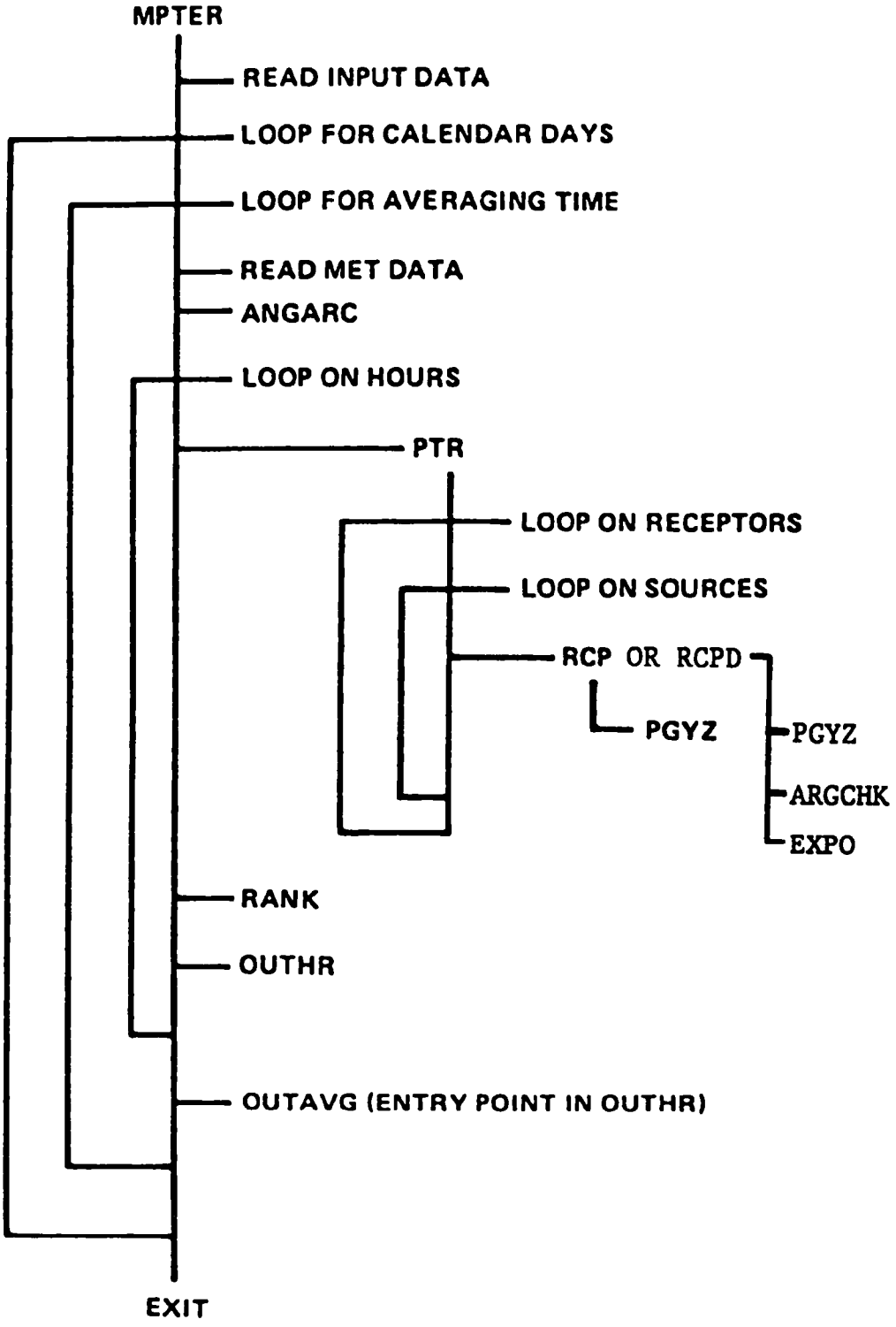

Figure 1. Structure of subroutines in MPTER-DS program.

culations are performed in PTR, and the output is printed in OUTHR.

GENERAL FLOW OF THE MODEL

The MPTER program has technical options for terrain adjustment, stack down-wash, gradual plume rise, and buoyancy-induced dispersion. In addition, "deposition" is now available as a technical option in the MPTER-DS program. All printed output, including the surface deposition flux table, is optionally available so the user can avoid unneeded output volume. Both the input and the output options are selected and specified by the user as inputs to the MPTER-DS program. The main routine MPTER primarily exists for input and bookkeeping; most technical calculations are performed by subroutine PTR. The latter calls RCPD or RCP, depending on the option specified for deposition. Both of these subroutines call PGYZ to obtain the Gaussian dispersion parameter values, and then calculate relative concentration using the appropriate algorithms. RCPD also calls subroutines ARGCHK and EXPO described below. PTR stores the calculated values to obtain hourly and other time-average concentrations at the receptors due to emissions from all the sources as well as from only the significant sources. Deposition flux calculations also are performed in PTR in a similar fashion, but only at ground-level receptors, when appropriate options are selected (see Section 3). Subroutine RANK orders the highest five concentrations for each averaging time for each receptor. Subroutine OUTHR essentially provides the printed output.

DESCRIPTION OF NEW SUBROUTINES

A brief description of the new subroutines of the MPTER-DS program is given below:

RCPD - This subroutine, called by PTR, calculates σ_y and σ_z, and χ_p/Q, the relative concentration at a downwind receptor location due to the dispersion and deposition of gaseous and particulate pollutants from a continuous point soruce.

ARGCHK - This subroutine, called by RCPD, limits the arguments of $e^{p^2} \cdot \text{erfc } p$ arising in the deposition algorithms (see Appendix) to avoid overflow/underflow errors.

EXPO - This subroutine, called by RCPD, calculates and returns $q = e^p$, if p is given. EXPO checks and limits the argument p to avoid overflow/underflow errors in the program.

For descriptions of the other subroutines, the user should refer to Pierce and Turner (1980).

SECTION 3

PREPARATION OF INPUT DATA

The input data for the MPTER-DS program are essentially the same as those described in the User's Guide for MPTER (Pierce and Turner, 1980), except for a few additions. The parameters, technical input and output options, and data cards related to the additional input of the MPTER-DS program are discussed in this section.

POLLUTANT HALF-LIFE

The MPTER model described by Pierce and Turner (1980) permits a simple exponential loss of pollutant with travel time, to account for chemical and physical depletion processes. At a travel time equal to the half-life (HAFL), 50% of the pollutant will remain. The value for HAFL is entered in seconds on input card type 4. If HAFL is set to zero, those portions of the code calculating pollutant loss will be skipped.

The MPTER-DS program retains HAFL, so that one can use this simpler approach for applications of the model where pollutant settling and dry deposition need not be explicitly calculated.

TECHNICAL OPTION

A new technical option in the MPTER-DS code is the "deposition" option. This is entered through IOPT(25) in input card type 5. If IOPT(25) = 1, the effects of gravitational settling and/or deposition loss of pollutant are considered, using the new plume diffusion-deposition algorithms (see Appendix); if IOPT(25) = 0, deposition effects are ignored and the MPTER-DS program reduces to the original MPTER version.

DEPOSITION PARAMETERS

If IOPT(25) is set to 1, the program expects input data on parameters W, VD, and IDEP. The last is a user-option output parameter: IDEP = 1, if output of deposition fluxes at ground-level receptors is required; IDEP = 0, otherwise. These parameters are read into the program through input card type 15, described in Table 1.

TABLE 1. MPTER-DS CARD TYPE 15 -- DEPOSITION
(used when option 25 = 1)

Variable	Format	Description	Units
W	Free Format	gravitational settling velocity	cm/sec
VD	"	deposition velocity	cm/sec
IDEP	"	option for output of surface deposition flux	—

This (type 15) card generally follows input card type 14, which reads the hourly meteorological data. However, the total number of type 15 cards required, and their exact location in the sequence of input data cards, are determined by the parameters NPER (number of averaging periods to be run) and NAVG (number of hours in an averaging period) specified on card type 4. The total number of type 15 input cards must be equal to NPER. If NAVG = 1 and NPER > 1, then each card type 14 must immediately be followed by a type 15 card; for this case, one can specify different values for gravitational settling and deposition velocities for each hour, if desired. If NAVG ≧ 1 and NPER = 1, there is only one type 15 card, which follows NAVG number of type 14 cards. If NAVG > 1 and NPER > 1, one type 15 card must follow each set (consisting of NAVG number) of type 14 cards; for this case, one can specify different values of W and VD for each averaging period, if desired.

The selection and specification of values for the model parameters W and VD is briefly discussed in the Appendix. A more complete discussion is given by Rao (1981).

SECTION 4

EXAMPLE PROBLEMS

Three example problems are provided in this section to demonstrate the use of the MPTER-DS program. These examples illustrate three important deposition cases: (1) large pollutant particles with appreciable gravitational settling velocity equal to the dry deposition velocity ($W = V_d > 0$), (2) gaseous pollutants which deposit on the ground without gravitational settling ($W = 0$, $V_d > 0$), and (3) fine suspended particles whose deposition occurs primarily due to non-gravitational effects ($0 < W < V_d$). Input data for the three examples are taken from the examples given by Pierce and Turner (1980); this should allow a useful comparison of the results and demonstrate the effects of explicitly including dry deposition removal mechanisms.

EXAMPLE ONE

Our example problem 1 is identical to example 1 of Pierce and Turner (1980), except that we specify here $W = V_d = 10$ cm/sec for the particulate pollutant. This example calculates concentrations from one source for a one-hour period at 20 receptors. Five receptors are stacked vertically above each of the four downwind positions. The option to adjust for terrain is selected. The input data

for this example are shown in Table 2. Note that IOPT(25) = 1 in card type 5 and W, VD, and IDEP are input as 10., 10., 1 in card type 15 (last card).

A computer listing of the output for this example is shown in Table 3. Only the hourly summary of concentrations is printed. By comparing the values with those of Pierce and Turner (1980), it can be seen that our concentrations are significantly larger at almost all receptors, which are clustered near the source in this example. This is a result of deposition by gravitational settling which tends to move the plume toward the ground as it travels downwind, and increases the ground-level concentration near the source. Receptors 16 through 20 have a ground-level elevation of 10 meters higher than the stack top. Asteriks appearing on the output indicate that no estimates can be made for these receptors. An hourly summary table of deposition flux in kg/km^2-hour is also printed in the output. The deposition flux is calculated at only 3 out of the 4 ground-level receptors, since no concentration estimate is available at the fourth receptor.

EXAMPLE TWO

Our example problem 2 is identical to example 2D of Pierce and Turner (1980), except that we specify here W = 0 and V_d = 1 cm/sec for the SO_2 pollutant. This example calculates hourly concentrations from two point sources for two one-hour periods, using different wind speeds but the same wind direction; 27 receptors are directly east of the sources, and the wind blows from the west. Options for including buoyancy-induced dispersion with gradual plume rise are selected.

The input data for this example are shown in Table 4. Since NPER = 2 and NAVG = 1 on card type 4, there are two type 15 cards in this problem; each type 14 (hourly meteorological data) card is followed by a type 15 card. Note that IOPT(25) = 1 in card type 5, and W, VD, and IDEP are input as 0., 1., 1 in card type 15 for each hour of meteorology. In principle, we could have specified different values of W and VD for each hour in this example.

A computer listing of the output for this example is shown in Table 5. Only the hourly concentration tables are printed. These values are slightly smaller than the corresponding values of Pierce and Turner (1980) due to the deposition loss of the pollutant between the sources and receptor locations. An hourly surface deposition flux table is also printed for each hour of the meteorology. These tables show deposition flux in kg/km^2-hour at all ground-level receptors from each source, and the totals.

EXAMPLE THREE

Our third example problem is identical to example 4 of Pierce and Turner (1980), except that we specify here W = 0.2 and V_d = 2 cm/sec for the fine suspended particulate pollutant. This problem involves 30 sources and 50 receptors for one three-hour period. In addition, 36 receptors are generated internally on a circle corresponding to a user-specified radial distance of 1 km. All receptors are at ground-level on flat terrain. There are more sources than can be considered significant, and sources 8 and 27 are specified by the user to obtain contribution information. Table 6 shows the input data for this

problem. It can be seen that IOPT(25) = 1 in card type 5, and W, VD, and IDEP are input as 0.2, 2., 1 in card type 15. Since NPER = 1 and NAVG = 3 on card type 4, there is only one type 15 card in this problem. This card follows the three type 14 (hourly meteorological data) cards.

A computer listing of the output for this problem is shown in Table 7. This problem is an example of all types of printed output except the so-called "high-five" table. For each concentration table, there is a corresponding deposition flux table which includes total contributions from significant sources as well as totals from all sources at each receptor. The MPTER-DS model is capable of generating a large amount of output unless the user suppresses unnecessary results by using the appropriate options in the input. For example, if IDEP were set to zero in this problem, the deposition flux tables would have been deleted from the output. For additional information on the options, and more details on the example problems presented here, the user is referred to Pierce and Turner (1980).

TABLE 2. INPUT DATA FOR EXAMPLE PROBLEM 1

```
MPTER RUN DEPICTING CONCENTRATIONS FOR VARYING TERRAIN HEIGHTS
AND RECEPTORS WITH VARYING HEIGHTS ABOVE GROUND LEVEL.  TSP CONCENTRATIONS.
DATA FROM 1980 MPTER GUIDE --- EXAMPLE 1      SEPTEMBER 3,1981
78 1 1 1 1 4 1 0 1. 1. 14400.
1 1 1 0 1 0 0 0 1 1 1 0 0 0 0 0 1 1 1 0 0 0 0 0 1
10.,.07,.07,.1,.15,.35,.55,1.,1.,1.,1.,0.,0.
SOURCE #1        0.00     0.00            1000.   50.00  415.00    2.00   20.00100.
ENDP
 1KM GRD      1.000      0.000        0.       80.0
 1   50M      1.000      0.000       50.       80.0
 1  100M      1.000      0.000      100.       80.0
 1  150M      1.000      0.000      150.       80.0
 1  200M      1.000      0.000      200.       80.0
 2KM GRD      2.000      0.000        0.       120.
 2   50M      2.000      0.000       50.       120.
 2  100M      2.000      0.000      100.       120.
 2  150M      2.000      0.000      150.       120.
 2  200M      2.000      0.000      200.       120.
 3KM GRD      3.000      0.000        0.       140.
 3KM 50M      3.000      0.000       50.       140.
 3  100M      3.000      0.000      100.       140.
 3  150M      3.000      0.000      150.       140.
 3  200M      3.000      0.000      200.       140.
 4KM GRD      4.000      0.000        0.       160.
 4KM 50M      4.000      0.000       50.       160.
 4  100M      4.000      0.000      100.       160.
 4  150M      4.000      0.000      150.       160.
 4  200M      4.000      0.000      200.       160.
ENDREC
78,001,01,3,2.,283.,270.,2000.
10.,10.,1
```

TABLE 3. COMPUTER LISTING OF OUTPUT FOR EXAMPLE PROBLEM 1

```
                                        MPTER - VERSION 81275
METER RUN DEPICTING CONCENTRATIONS FOR VARYING TERRAIN HEIGHTS
AND RECEPTORS WITH VARYING HEIGHTS ABOVE GROUND LEVEL.  TSP CONCENTRATIONS.
DATA FROM 1980 MPTER GUIDE --- EXAMPLE 1      SEPTEMBER 3,1981

                          GENERAL INPUT INFORMATION

 THIS RUN OF MPTER-VERSION 81275 IS FOR THE POLLUTANT PART FOR   1   1-HOUR PERIODS.
 CONCENTRATION ESTIMATES BEGIN ON HOUR- 1, JULIAN DAY-  1, YEAR-1978.
 A FACTOR OF      1.0000000 HAS BEEN SPECIFIED TO CONVERT USER LENGTH UNITS TO KILOMETERS.
  1 SIGNIFICANT SOURCES ARE TO BE CONSIDERED.
  A HALF-LIFE OF   14400.00 (SECONDS) HAS BEEN ASSUMED BY THE USER.
  A FACTOR OF      1.0000000 HAS BEEN SPECIFIED TO CONVERT USER HEIGHT UNITS TO METERS.

 OPTION       OPTION LIST                    OPTION SPECIFICATION : 0= IGNORE OPTION
                                                                    1= USE OPTION
                        TECHNICAL OPTIONS
      1       TERRAIN ADJUSTMENTS                                    1
      2       DO NOT INCLUDE STACK DOWNWASH CALCULATIONS             1
      3       DO NOT INCLUDE GRADUAL PLUME RISE CALCULATIONS         1
      4       CALCULATE INITIAL PLUME SIZE                           0
                        INPUT OPTIONS
      5       READ MET DATA FROM CARDS                               1
      6       READ HOURLY EMISSIONS                                  0
      7       SPECIFY SIGNIFICANT SOURCES                            0
      8       READ RADIAL DISTANCES TO GENERATE RECEPTORS            0
                        PRINTED OUTPUT OPTIONS
      9       DELETE EMISSIONS WITH HEIGHT TABLE                     1
     10       DELETE MET DATA SUMMARY FOR AVG PERIOD                 1
     11       DELETE HOURLY CONTRIBUTIONS                            1
     12       DELETE MET DATA ON HOURLY CONTRIBUTIONS                0
     13       DELETE FINAL PLUME RISE CALC ON HRLY CONTRIBUTIONS     0
     14       DELETE HOURLY SUMMARY                                  0
     15       DELETE MET DATA ON HRLY SUMMARY                        0
     16       DELETE FINAL PLUME RISE CALC ON HRLY SUMMARY           0
     17       DELETE AVG-PERIOD CONTRIBUTIONS                        1
     18       DELETE AVERAGING PERIOD SUMMARY                        1
     19       DELETE AVG CONCENTRATIONS AND HI-5 TABLES              1
                        OTHER CONTROL AND OUTPUT OPTIONS
     20       RUN IS PART OF A SEGMENTED RUN                         0
     21       WRITE PARTIAL CONC TO DISK OR TAPE                     0
     22       WRITE HOURLY CONC TO DISK OR TAPE                      0
     23       WRITE AVG-PERIOD CONC TO DISK OR TAPE                  0
     24       PUNCH AVG-PERIOD CONC ONTO CARDS                       0
                        ADDITIONAL TECHNICAL OPTIONS
     25       INCLUDE GRAVITATIONAL SETTLING AND/OR DEPOSITION       1

ANEMOMETER HEIGHT IS:      10.00
EXPONENTS FOR POWER- LAW WIND INCREASE WITH HEIGHT ARE:0.07,0.07,0.10,0.15,0.35,0.55
TERRAIN ADJUSTMENTS ARE: 1.000,1.000,1.000,1.000,0.0  ,0.0
```

POINT SOURCE INFORMATION

SOURCE	EAST COORD (USER UNITS)	NORTH COORD (USER UNITS)	SO2(G/SEC) EMISSIONS	PART(G/SEC) EMISSIONS	STACK HT(M)	STACK TEMP(K)	STACK DIAM(M)	STACK VEL(M/SEC)	POTEN. IMPACT (MICRO G/M**3)	EFF HT(M)	GRD-LVL ELEV USER HT UNITS	BUOY FLUX F M**4/S**3
1 SOURCE #1	0.0	0.0	0.0	1000.00	50.0	415.0	2.0	20.0	1500.05	196.96	100.00	57.66

SIGNIFICANT PART POINT SOURCES

RANK	CHI-MAX (MICROGRAMS/M**3)	SOURCE NO.
1	1500.05	1

ADDITIONAL INFORMATION ON SOURCES.

EMISSION INFORMATION FOR 1 (NPT) POINT SOURCES HAS BEEN INPUT
1 SIGNIFICANT POINT SOURCES(NSIGP) ARE TO BE USED FOR THIS RUN
THE ORDER OF SIGNIFICANCE(INES) FOR 25 OR LESS POINT SOURCES USED IN THIS RUN AS LISTED BY POINT SOURCE NUMBER:
1

RECEPTOR INFORMATION

RECEPTOR	IDENTIFICATION	EAST COORD (USER UNITS)	NORTH COORD (USER UNITS)	RECEPTOR HT ABV LOCAL GRD LVL (METERS)	RECEPTOR GROUND LEVEL ELEVATION (USER HT UNITS)
1 *	1KM GRD	1.000	0.0	0.0	80.0
2 *	1 50M	1.000	0.0	50.0	80.0
3 *	1 100M	1.000	0.0	100.0	80.0
4 *	1 150M	1.000	0.0	150.0	80.0
5 *	1 200M	1.000	0.0	200.0	80.0
6	2KM GRD	2.000	0.0	0.0	120.0
7	2 50M	2.000	0.0	50.0	120.0
8	2 100M	2.000	0.0	100.0	120.0
9	2 150M	2.000	0.0	150.0	120.0
10	2 200M	2.000	0.0	200.0	120.0
11	3KM GRD	3.000	0.0	0.0	140.0
12	3KM 50M	3.000	0.0	50.0	140.0
13	3 100M	3.000	0.0	100.0	140.0
14	3 150M	3.000	0.0	150.0	140.0
15	3 200M	3.000	0.0	200.0	140.0
16**	4KM GRD	4.000	0.0	0.0	160.0
17**	4KM 50M	4.000	0.0	50.0	160.0
18**	4 100M	4.000	0.0	100.0	160.0
19**	4 150M	4.000	0.0	150.0	160.0
20**	4 200M	4.000	0.0	200.0	160.0

* ONE ASTERISK INDICATES THAT THE ASSOCIATED RECEPTOR(S) HAVE A GROUND LEVEL ELEVATION LOWER THAN THE LOWEST SOURCE BASE ELEVATION.
CAUTION SHOULD BE USED IN INTERPRETING CONCENTRATIONS FOR THESE RECEPTORS.
** TWO ASTERISKS INDICATE THAT THE ASSOCIATED RECEPTOR(S) HAVE GROUND LEVEL ELEVATIONS ABOVE THE LOWEST STACK TOP.
CONSEQUENTLY NO CALCULATIONS WILL BE PERFORMED WITH THIS RECEPTOR.A SERIES OF ASTERISKS WILL INSTEAD APPEAR IN THE OUTPUT.

A GRAVITATIONAL SETTLING VELOCITY OF 10.00 (CM/SEC), AND A DEPOSITION VELOCITY OF 10.00 (CM/SEC) HAS BEEN ASSUMED BY THE USER.

METER RUN DEPICTING CONCENTRATIONS FOR VARYING TERRAIN HEIGHTS
AND RECEPTORS WITH VARYING HEIGHTS ABOVE GROUND LEVEL. TSP CONCENTRATIONS.
DATA FROM 1980 MPTER GUIDE --- EXAMPLE 1 SEPTEMBER 3,1981

PART SUMMARY CONCENTRATION TABLE(MICROGRAMS/M**3) 78/ 1 : HOUR 1

HOUR	THETA (DEG)	SPEED (M/S)	MIXING HEIGHT(M)	TEMP (K)	STABILITY CLASS
1	270.00	2.00	2000.00	283.00	3

1 2 3 4 5 6 7 8 9 10

FINAL HT (M) 246.76
DIST FIN HT (KM) 0.622

RECEPTOR NO.	NAME	EAST COORD	NORTH COORD	RECEPTOR HT ABV GRD (M)	RECEPTOR GRD-LVL ELEV (USER HT UNITS)	TOTAL FROM SIGNIF POINT SOURCES	TOTAL FROM ALL SOURCES	CONCENTRATION RANK
1 *	1KM GRD	1.00	0.0	0.0	80.0	68.4445	68.4445	20
2 *	1 50M	1.00	0.0	50.0	80.0	438.3149	438.3149	19
3 *	1 100M	1.00	0.0	100.0	80.0	2464.7787	2464.7787	11
4 *	1 150M	1.00	0.0	150.0	80.0	7108.4350	7108.4350	7
5 *	1 200M	1.00	0.0	200.0	80.0	10503.3778	10503.3778	6
6	2KM GRD	2.00	0.0	0.0	120.0	1674.0195	1674.0195	13
7	2 50M	2.00	0.0	50.0	120.0	1991.8988	1991.8988	12
8	2 100M	2.00	0.0	100.0	120.0	2566.8915	2566.8915	10
9	2 150M	2.00	0.0	150.0	120.0	2909.1067	2909.1067	8
10	2 200M	2.00	0.0	200.0	120.0	2760.4215	2760.4215	9
11	3KM GRD	3.00	0.0	0.0	140.0	1494.6675	1494.6675	15
12	3KM 50M	3.00	0.0	50.0	140.0	1496.4575	1496.4575	14
13	3 100M	3.00	0.0	100.0	140.0	1477.0434	1477.0434	16
14	3 150M	3.00	0.0	150.0	140.0	1396.2397	1396.2397	17
15	3 200M	3.00	0.0	200.0	140.0	1236.4769	1236.4769	18
16**	4KM GRD	4.00	0.0	0.0	160.0	0.0	**********	1
17**	4KM 50M	4.00	0.0	50.0	160.0	0.0	**********	2
18**	4 100M	4.00	0.0	100.0	160.0	0.0	**********	3
19**	4 150M	4.00	0.0	150.0	160.0	0.0	**********	4
20**	4 200M	4.00	0.0	200.0	160.0	0.0	**********	5

MTPF RUN DEPICTING CONCENTRATIONS FOR VARYING TERRAIN HEIGHTS
AND RECEPTORS WITH VARYING HEIGHTS ABOVE GROUND LEVEL. TSP CONCENTRATIONS.
DATA FROM 1980 MPTER GUIDE --- EXAMPLE 1 SEPTEMBER 3,1981

PART SUMMARY TABLE OF DEPOSITION FLUX (KG/KM**2/HOUR) 78/ 1 : HOUR 1
(GROUND LEVEL RECEPTORS ONLY)

RECEPTOR NO.	NAME	EAST COORD	NORTH COORD	RECEPTOR HT ABV GRD (M)	RECEPTOR GRD-LVL ELEV (USER HT UNITS)	TOTAL FROM SIGNIF POINT SOURCES	TOTAL FROM ALL SOURCES	CONCENTRATION RANK
1	1KM GRD	1.00	0.0	0.0	80.0	24.6400	24.6400	20
6	2KM GRD	2.00	0.0	0.0	120.0	602.6470	602.6470	13
11	3KM GRD	3.00	0.0	0.0	140.0	538.0801	538.0801	15

TABLE 4. INPUT DATA FOR EXAMPLE PROBLEM 2

```
MPTER RUN FOR SENSITIVITY TEST INVOLVING 2 SOURCES AND 2 HOURS.
INITIAL DISPERSION AND GRADUAL PLUME RISE CALCULATED.  SO2 CONCENTRATIONS.
DATA FROM 1980 MPTER GUIDE --- EXAMPLE 2D      SEPTEMBER 3,1981
79,299,1,2,1,3,2,0,1.,1.,295200.
0,1,0,0,1,0,0,0,0,1,0,0,0,1,1,1,1,1,1,0,0,0,0,0,1
10.,.07,.07,.1,.15,.35,.55,.0,.0,.0,.0,.0,.0
SRC 1 3.5                    81.09            12.8    727.6    3.5      23.5
SRC 14 427.6                 81.09            12.8    427.6    3.5      23.5
ENDP
1        .1
2        .2
3        .3
4        .4
5        .5
6        .6
7        .7
8        .8
9        .9
10       1.
11       1.2
12       1.5
13       2.
14       3.
15       4.
16       5.
17       6.
18       7.
19       8.
20       9.
21       10.
22       12.
23       15.
24       20.
25       30.
26       40.
27       50.
ENDREC
79,299,1,2,5.,277.6,270.,2000.
0.,1.,1
79,299,2,1,2.,277.6,270.,2000.
0.,1.,1
```

TABLE 5. COMPUTER LISTING OF OUTPUT FOR EXAMPLE PROBLEM 2

```
                                        MPTER - VERSION 81275
METEF RUN FOR SENSITIVITY TEST INVOLVING 2 SOURCES AND 2 HOURS.
INITIAL DISPERSION AND GRADUAL PLUME RISE CALCULATED.  SO2 CONCENTRATIONS.
DATA FROM 1980 MPTER GUIDE --- EXAMPLE 2D      SEPTEMBER 3,1981

                          GENERAL INPUT INFORMATION

 THIS RUN OF EPTER-VERSION 81275 IS FOR THE POLLUTANT SO2  FOR   2   1-HOUR PERIODS.
 CONCENTRATION ESTIMATES BEGIN ON HOUR- 1, JULIAN DAY-299, YEAR-1979.
 A FACTOR OF      1.0000000 HAS BEEN SPECIFIED TO CONVERT USER LENGTH UNITS TO KILOMETERS.
  2 SIGNIFICANT SOURCES ARE TO BE CONSIDERED.
  A HALF-LIFE OF  295200.00 (SECONDS) HAS BEEN ASSUMED BY THE USER.

 OPTION       OPTION LIST                    OPTION SPECIFICATION : 0= IGNORE OPTION
                                                                    1= USE OPTION
                         TECHNICAL OPTIONS
      1       TERRAIN ADJUSTMENTS                                    0
      2       DO NOT INCLUDE STACK DOWNWASH CALCULATIONS             1
      3       DO NOT INCLUDE GRADUAL PLUME RISE CALCULATIONS         0
      4       CALCULATE INITIAL PLUME SIZE                           0
                         INPUT OPTIONS
      5       READ MET DATA FROM CARDS                               1
      6       READ HOURLY EMISSIONS                                  0
      7       SPECIFY SIGNIFICANT SOURCES                            0
      8       READ RADIAL DISTANCES TO GENERATE RECEPTORS            0
                         PRINTED OUTPUT OPTIONS
      9       DELETE EMISSIONS WITH HEIGHT TABLE                     0
     10       DELETE MET DATA SUMMARY FOR AVG PERIOD                 1
     11       DELETE HOURLY CONTRIBUTIONS                            0
     12       DELETE MET DATA ON HOURLY CONTRIBUTIONS                0
     13       DELETE FINAL PLUME RISE CALC ON HRLY CONTRIBUTIONS     0
     14       DELETE HOURLY SUMMARY                                  1
     15       DELETE MET DATA ON HRLY SUMMARY                        1
     16       DELETE FINAL PLUME RISE CALC ON HRLY SUMMARY           1
     17       DELETE AVG-PERIOD CONTRIBUTIONS                        1
     18       DELETE AVERAGING PERIOD SUMMARY                        1
     19       DELETE AVG CONCENTRATIONS AND BI-5 TABLES              1
                         OTHER CONTROL AND OUTPUT OPTIONS
     20       RUN IS PART OF A SEGMENTED RUN                         0
     21       WRITE PARTIAL CONC TO DISK OR TAPE                     0
     22       WRITE HOURLY CONC TO DISK OR TAPE                      0
     23       WRITE AVG-PERIOD CONC TO DISK OR TAPE                  0
     24       PUNCH AVG-PERIOD CONC ONTO CARDS                       0
                         ADDITIONAL TECHNICAL OPTIONS
     25       INCLUDE GRAVITATIONAL SETTLING AND/OR DEPOSITION       1

  ANEMOMETER HEIGHT=       10.00
  WIND PROFILE WITH HEIGHT EXPONENTS CORRESPONDING TO STABILITY ARE AS FOLLOWS:
       FOR STABILITY A: 0.07
           STABILITY B: 0.07
           STABILITY C: 0.10
           STABILITY D: 0.15
           STABILITY E: 0.35
           STABILITY F: 0.55
```

POINT SOURCE INFORMATION

SOURCE	EAST COORD (USER UNITS)	NORTH COORD (USER UNITS)	SO2(G/SEC) EMISSIONS	PART(G/SEC) EMISSIONS	STACK HT(M)	STACK TEMP(K)	STACK DIAM(M)	STACK VEL(M/SEC)	POTEN. IMPACT (MICRO G/M**3)	EFF HT(M)	GRD-LVL ELEV USER HT UNITS	BUOY FLUX F M**4/S**3
1 SRC 1 3.5	0.0	0.0	81.09	0.0	12.8	727.6	3.5	23.5	22.74	497.65	0.0	421.50
2 SRC 14 427.6	0.0	0.0	81.09	0.0	12.8	427.6	3.5	23.5	44.56	342.93	0.0	222.15

SIGNIFICANT SO2 POINT SOURCES

RANK	CHI-MAX (MICROGRAMS/M**3)	SOURCE NO.
1	44.56	2
2	22.74	1

TOTAL SO2 EMISSION AND CUMULATIVE FRACTION ACCORDING TO HEIGHT

HEIGHT(M)	TOTAL POINT EMISSIONS(G/S)	CUMULATIVE FRACTION
0 - 5	0.0	0.0
6 - 10	0.0	0.0
11 - 15	162.18	1.000
16 - 20	0.0	1.000
21 - 25	0.0	1.000
26 - 30	0.0	1.000
31 - 35	0.0	1.000
36 - 40	0.0	1.000
41 - 45	0.0	1.000
46 - 50	0.0	1.000
51 - 55	0.0	1.000
56 - 60	0.0	1.000
61 - 65	0.0	1.000
66 - 70	0.0	1.000
71 - 75	0.0	1.000
76 - 80	0.0	1.000
81 - 85	0.0	1.000
86 - 90	0.0	1.000
91 - 95	0.0	1.000
96 -100	0.0	1.000
TOTAL	162.18	

ADDITIONAL INFORMATION ON SOURCES.

EMISSION INFORMATION FOR 2 (NPT) POINT SOURCES HAS BEEN INPUT
2 SIGNIFICANT POINT SOURCES(NSIGP) ARE TO BE USED FOR THIS RUN
THE ORDER OF SIGNIFICANCE(INPS) FOR 25 OR LESS POINT SOURCES USED IN THIS RUN AS LISTED BY POINT SOURCE NUMBER:
2 1

RECEPTOR INFORMATION

RECEPTOR	IDENTIFICATION	EAST COORD (USER UNITS)	NORTH COORD (USER UNITS)	RECEPTOR HT ABV LOCAL GRD LVL (METERS)	RECEPTOR GROUND LEVEL ELEVATION (USER HT UNITS)
1	1	0.100	0.0	0.0	0.0
2	2	0.200	0.0	0.0	0.0
3	3	0.300	0.0	0.0	0.0
4	4	0.400	0.0	0.0	0.0
5	5	0.500	0.0	0.0	0.0
6	6	0.600	0.0	0.0	0.0
7	7	0.700	0.0	0.0	0.0
8	8	0.800	0.0	0.0	0.0
9	9	0.900	0.0	0.0	0.0
10	10	1.000	0.0	0.0	0.0
11	11	1.200	0.0	0.0	0.0
12	12	1.500	0.0	0.0	0.0
13	13	2.000	0.0	0.0	0.0
14	14	3.000	0.0	0.0	0.0
15	15	4.000	0.0	0.0	0.0
16	16	5.000	0.0	0.0	0.0
17	17	6.000	0.0	0.0	0.0
18	18	7.000	0.0	0.0	0.0
19	19	8.000	0.0	0.0	0.0
20	20	9.000	0.0	0.0	0.0
21	21	10.000	0.0	0.0	0.0
22	22	12.000	0.0	0.0	0.0
23	23	15.000	0.0	0.0	0.0
24	24	20.000	0.0	0.0	0.0
25	25	30.000	0.0	0.0	0.0
26	26	40.000	0.0	0.0	0.0
27	27	50.000	0.0	0.0	0.0

A GRAVITATIONAL SETTLING VELOCITY OF 0.0 (CM/SEC), AND A DEPOSITION VELOCITY OF 1.00 (CM/SEC) HAS BEEN ASSUMED BY THE USER.

METER RUN FOR SENSITIVITY TEST INVOLVING 2 SOURCES AND 2 HOURS.
INITIAL DISPERSION AND GRADUAL PLUME RISE CALCULATED. SO2 CONCENTRATIONS.
DATA FROM 1980 MPTER GUIDE --- EXAMPLE 2D SEPTEMBER 3,1981

SO2 CONCENTRATION(MICROGRAMS/M**3) FROM SIGNIFICANT POINT SOURCES 79/ 299 : HOUR 1

HOUR	THETA (DEG)	SPEED (M/S)	MIXING HEIGHT(M)	TEMP (K)	STABILITY CLASS
1	270.00	5.00	2000.00	277.60	2

	1	2	3	4	5	6	7	8	9	10
FINAL HT (M)	304.76	220.56								
DIST FIN HT (KM)	1.354	1.079								

BANK	1	2	TOTAL SIGNIF POINT	TOTAL ALL POINT SOURCES
SOURCE #	2	1		
RECEP #				
1	0.030	0.000	0.030	0.030
2	2.589	0.129	2.718	2.718
3	11.255	1.201	12.455	12.455
4	20.542	3.304	23.846	23.846
5	32.173	7.272	39.445	39.445
6	40.272	11.442	51.713	51.713
7	44.938	15.056	59.994	59.994
8	47.020	17.847	64.866	64.866
9	47.353	19.821	67.173	67.173
10	46.573	21.095	67.668	67.668
11	52.595	22.105	74.701	74.701
12	57.088	26.786	83.874	83.874
13	47.531	31.836	79.367	79.367
14	27.536	23.398	50.934	50.934
15	16.934	15.546	32.480	32.480
16	11.296	10.727	22.024	22.024
17	8.030	7.761	15.791	15.791
18	5.989	5.848	11.837	11.837
19	4.637	4.555	9.192	9.192
20	3.701	3.650	7.351	7.351
21	3.036	3.000	6.037	6.037
22	2.226	2.221	4.447	4.447
23	1.770	1.771	3.541	3.541
24	1.377	1.377	2.754	2.754
25	1.020	1.020	2.040	2.040
26	0.793	0.793	1.586	1.586
27	0.651	0.651	1.302	1.302

METER RUN FOR SENSITIVITY TEST INVOLVING 2 SOURCES AND 2 HOURS.
INITIAL DISPERSION AND GRADUAL PLUME RISE CALCULATED. SO2 CONCENTRATIONS.
DATA FROM 1980 MPTER GUIDE --- EXAMPLE 2D SEPTEMBER 3,1981

SO2 SURFACE DEPOSITION FLUX (KG/KM**2/HOUR) FROM SIGNIFICANT POINT SOURCES 79/ 299 : HOUR 1

RANK	1	2	TOTAL SIGNIF POINT	TOTAL ALL POINT SOURCES
SOURCE #	2	1		
GEL EVL RECEP.				
1	0.001	0.000	0.001	0.001
2	0.093	0.005	0.098	0.098
3	0.405	0.043	0.448	0.448
4	0.739	0.119	0.858	0.858
5	1.158	0.262	1.420	1.420
6	1.450	0.412	1.862	1.862
7	1.618	0.542	2.160	2.160
8	1.693	0.642	2.335	2.335
9	1.705	0.714	2.418	2.418
10	1.677	0.759	2.436	2.436
11	1.893	0.796	2.689	2.689
12	2.055	0.964	3.019	3.019
13	1.711	1.146	2.857	2.857
14	0.991	0.842	1.834	1.834
15	0.610	0.560	1.169	1.169
16	0.407	0.386	0.793	0.793
17	0.289	0.279	0.568	0.568
18	0.216	0.211	0.426	0.426
19	0.167	0.164	0.331	0.331
20	0.133	0.131	0.265	0.265
21	0.109	0.108	0.217	0.217
22	0.080	0.080	0.160	0.160
23	0.064	0.064	0.127	0.127
24	0.050	0.050	0.099	0.099
25	0.037	0.037	0.073	0.073
26	0.029	0.029	0.057	0.057
27	0.023	0.023	0.047	0.047

A GRAVITATIONAL SETTLING VELOCITY OF 0.0 (CM/SEC), AND A DEPOSITION VELOCITY OF 1.00 (CM/SEC) HAS BEEN ASSUMED BY THE USER.

METER RUN FOR SENSITIVITY TEST INVOLVING 2 SOURCES AND 2 HOURS.
INITIAL DISPERSION AND GRADUAL PLUME RISE CALCULATED. SO2 CONCENTRATIONS.
DATA FROM 1980 METER GUIDE --- EXAMPLE 2D SEPTEMBER 3,1981

SO2 CONCENTRATION(MICROGRAMS/M**3) FROM SIGNIFICANT POINT SOURCES 79/ 299 : HOUR 2

HOUR	THETA (DEG)	SPEED (M/S)	MIXING HEIGHT(M)	TEMP (K)	STABILITY CLASS
2	270.00	2.00	2000.00	277.60	1

	1	2	3	4	5	6	7	8	9	10
FINAL HT (M)	742.70	532.20								
DIST FIN HT (KM)	1.354	1.079								

BANK	1	2	TOTAL SIGNIF POINT	TOTAL ALL POINT SOURCES
SOURCE #	2	1		
RECEP #				
1	0.000	0.0	0.000	0.000
2	0.000	0.000	0.000	0.000
3	0.019	0.000	0.019	0.019
4	0.788	0.026	0.814	0.814
5	8.810	1.076	9.886	9.886
6	37.306	10.869	48.175	48.175
7	65.130	29.687	94.817	94.817
8	77.666	45.638	123.303	123.303
9	77.477	53.156	130.633	130.633
10	70.806	53.683	124.489	124.489
11	55.627	45.127	100.754	100.754
12	34.644	30.857	65.501	65.501
13	20.329	20.249	40.578	40.578
14	14.425	14.425	28.850	28.850
15	11.211	11.211	22.423	22.423
16	9.219	9.219	18.439	18.439
17	7.858	7.858	15.716	15.716
18	6.865	6.865	13.729	13.729
19	6.106	6.106	12.212	12.212
20	5.506	5.506	11.012	11.012
21	5.019	5.019	10.039	10.039
22	4.275	4.275	8.551	8.551
23	3.511	3.511	7.022	7.022
24	2.719	2.719	5.438	5.438
25	1.888	1.888	3.776	3.776
26	1.450	1.450	2.899	2.899
27	1.176	1.176	2.352	2.352

METER RUN FOR SENSITIVITY TEST INVOLVING 2 SOURCES AND 2 HOURS.
INITIAL DISPERSION AND GRADUAL PLUME RISE CALCULATED. SO2 CONCENTRATIONS.
DATA FROM 1980 METER GUIDE --- EXAMPLE 2D SEPTEMBER 3,1981

SO2 SURFACE DEPOSITION FLUX (KG/KM**2/HOUR) FROM SIGNIFICANT POINT SOURCES 79/ 299 : HOUR 2

RANK	1	2	TOTAL SIGNIF POINT	TOTAL ALL POINT SOURCES
SOURCE #	2	1		
GRD LVL RECEP.				
1	0.000	0.0	0.000	0.000
2	0.000	0.000	0.000	0.000
3	0.001	0.000	0.001	0.001
4	0.028	0.001	0.029	0.029
5	0.317	0.039	0.356	0.356
6	1.343	0.391	1.734	1.734
7	2.345	1.069	3.413	3.413
8	2.796	1.643	4.439	4.439
9	2.789	1.914	4.703	4.703
10	2.549	1.933	4.482	4.482
11	2.003	1.625	3.627	3.627
12	1.247	1.111	2.358	2.358
13	0.732	0.729	1.461	1.461
14	0.519	0.519	1.039	1.039
15	0.404	0.404	0.807	0.807
16	0.332	0.332	0.664	0.664
17	0.283	0.283	0.566	0.566
18	0.247	0.247	0.494	0.494
19	0.220	0.220	0.440	0.440
20	0.198	0.198	0.396	0.396
21	0.181	0.181	0.361	0.361
22	0.154	0.154	0.308	0.308
23	0.126	0.126	0.253	0.253
24	0.098	0.098	0.196	0.196
25	0.068	0.068	0.136	0.136
26	0.052	0.052	0.104	0.104
27	0.042	0.042	0.085	0.085

TABLE 6. INPUT DATA FOR EXAMPLE PROBLEM 3

```
APPLICATION FOR 30 SOURCES AND 50 RECEPTORS
POLLUTANT TSP IS BEING MODELED USING 3 HOURS OF MET DATA
DATA FROM 1980 MPTER GUIDE --- EXAMPLE 4      SEPTEMBER 3,1981
79,292,12,1,3,4,10,0,1.,1.,0.
0,0,0,1,1,0,1,1,0,0,0,0,0,0,1,1,0,0,1,0,0,0,0,0,1
10.,.07,.07,.1,.15,.35,.55,0.,0.,0.,0.,0.,0.,0.
1          0.5     0.7          600.    200.    430.    5.8     21.0
2          0.4     1.85         225.    150.    425.    5.2     19.
3          0.5     1.8          250.    150.    425.    5.2     19.
4          1.75    .85          70.     80.     430.    3.6     16.
5          1.75    .75          70.     80.     430.    3.6     16.
6          1.75    .65          70.     80.     430.    3.6     16.
7          2.4     1.5          100.    120.    415.    5.      23.
8          2.5     1.6          120.    120.    415.    5.      23.
9          2.5     1.5          100.    120.    415.    5.      23.
10         1.8     1.85         85.     90.     420.    4.6     17.
11         1.95    1.9          85.     90.     420.    4.6     17.
12         2.1     1.85         85.     90.     420.    4.6     17.
13         2.      1.75         60.     50.     440.    3.      15.
14         1.9     1.75         60.     50.     440.    3.      15.
15         2.35    1.1          5.      30.     450.    2.3     12.
16         2.4     1.1          5.      30.     450.    2.3     12.
17         2.45    1.1          5.      30.     450.    2.3     12.
18         2.5     1.1          5.      30.     450.    2.3     12.
19         2.35    1.           5.      30.     450.    2.3     12.
20         2.4     1.           5.      30.     450.    2.3     12.
21         2.45    1.           5.      30.     450.    2.3     12.
22         2.5     1.           5.      30.     450.    2.3     12.
23         .85     1.05         80.     120.    420.    4.8     18.
24         .9      1.05         80.     120.    420.    4.8     18.
25         .95     1.05         80.     120.    420.    4.8     18.
26         1.      1.05         80.     120.    420.    4.8     18.
27         .7      2.65         60.     100.    460.    4.      20.
28         .7      2.6          60.     100.    460.    4.      20.
29         .7      2.55         60.     100.    460.    4.      20.
30         .7      2.5          60.     100.    460.    4.      20.
END
002008027
1.,0.,0.,0.,0.,2.,1.
1        1.00     2.5
2        1.25     2.4
3        1.       2.25
4        1.25     2.25
5        1.2      2.
6        1.5      2.
7        .75      1.7
8        1.       1.6
9        .75      1.5
10       1.       1.5
11       .95      1.25
12       1.25     1.25
```

```
13        2.        1.
14        2.25      1.25
15        3.        1.75
16        3.        1.5
17        3.25      1.5
18        3.5       1.5
19        3.5       1.25
20        3.        1.
21        3.5       1.
22        2.5       .75
23        2.75      .75
24        3.        .75
25        3.25      .75
26        1.25      .5
27        1.5       .5
28        1.75      .5
29        2.        .5
30        2.25      .5
31        2.5       .5
32        3.        .5
33        3.5       .5
34        .75       .25
35        2.25      .25
36        2.75      .25
37        .5        0.
38        .75       0.
39        1.        0.
40        1.25      0.
41        1.5       0.
42        1.75      0.
43        2.        0.
44        2.25      0.
45        2.5       0.
46        2.75      0.
47        3.        0.
48        3.25      0.
49        3.5       0.
50        3.5       -0.05
ENCBEC
79,292,12,2,2.7,298.,290.,1800.
75,292,13,2,2.9,299.,320.,1850.
75,292,14,2,3.0,299.,305.,1900.
0.2,2.,1
```

TABLE 7. COMPUTER LISTING OF OUTPUT FOR EXAMPLE PROBLEM 3

```
                                        MPTER - VERSION 81275
APPLICATION FOR 30 SOURCES AND 50 RECEPTORS
POLLUTANT TSP IS BEING MODELED USING 3 HOURS OF MET DATA
DATA FROM 1980 MPTER GUIDE --- EXAMPLE 4     SEPTEMBER 3,1981

                              GENERAL INPUT INFORMATION

 THIS RUN OF MPTER-VERSION 81275 IS FOR THE POLLUTANT PART FOR   1   3-HOUR PERIODS.
 CONCENTRATION ESTIMATES BEGIN ON HOUR-12, JULIAN DAY-292, YEAR-1979.
 A FACTOR OF      1.0000000 HAS BEEN SPECIFIED TO CONVERT USER LENGTH UNITS TO KILOMETERS.
 10 SIGNIFICANT SOURCES ARE TO BE CONSIDERED.
THIS RUN WILL NOT CONSIDER ANY POLLUTANT LOSS.

 OPTION       OPTION LIST                    OPTION SPECIFICATION : 0= IGNORE OPTION
                                                                    1= USE OPTION
                         TECHNICAL OPTIONS
      1       TERRAIN ADJUSTMENTS                                    0
      2       DO NOT INCLUDE STACK DOWNWASH CALCULATIONS             0
      3       DO NOT INCLUDE GRADUAL PLUME RISE CALCULATIONS         0
      4       CALCULATE INITIAL PLUME SIZE                           1
                         INPUT OPTIONS
      5       READ MET DATA FROM CARDS                               1
      6       READ HOURLY EMISSIONS                                  0
      7       SPECIFY SIGNIFICANT SOURCES                            1
      8       READ RADIAL DISTANCES TO GENERATE RECEPTORS            1
                         PRINTED OUTPUT OPTIONS
      9       DELETE EMISSIONS WITH HEIGHT TABLE                     0
     10       DELETE MET DATA SUMMARY FOR AVG PERIOD                 0
     11       DELETE HOURLY CONTRIBUTIONS                            0
     12       DELETE MET DATA ON HOURLY CONTRIBUTIONS                0
     13       DELETE FINAL PLUME RISE CALC ON HRLY CONTRIBUTIONS     0
     14       DELETE HOURLY SUMMARY                                  0
     15       DELETE MET DATA ON HRLY SUMMARY                        1
     16       DELETE FINAL PLUME RISE CALC ON HRLY SUMMARY           1
     17       DELETE AVG-PERIOD CONTRIBUTIONS                        0
     18       DELETE AVERAGING PERIOD SUMMARY                        0
     19       DELETE AVG CONCENTRATIONS AND HI-5 TABLES              1
                         OTHER CONTROL AND OUTPUT OPTIONS
     20       RUN IS PART OF A SEGMENTED RUN                         0
     21       WRITE PARTIAL CONC TO DISK OR TAPE                     0
     22       WRITE HOURLY CONC TO DISK OR TAPE                      0
     23       WRITE AVG-PERIOD CONC TO DISK OR TAPE                  0
     24       PUNCH AVG-PERIOD CONC ONTO CARDS                       0
                         ADDITIONAL TECHNICAL OPTIONS
     25       INCLUDE GRAVITATIONAL SETTLING AND/OR DEPOSITION       1

  ANEMOMETER HEIGHT=       10.00
  WIND PROFILE WITH HEIGHT EXPONENTS CORRESPONDING TO STABILITY ARE AS FOLLOWS:
       FOR STABILITY A: 0.07
           STABILITY B: 0.07
           STABILITY C: 0.10
           STABILITY D: 0.15
           STABILITY E: 0.35
           STABILITY F: 0.55
```

POINT SOURCE INFORMATION

SOURCE	EAST COORD (USER UNITS)	NORTH COORD (USER UNITS)	SO2(G/SEC) EMISSIONS	PART(G/SEC) EMISSIONS	STACK HT(M)	STACK TEMP(K)	STACK DIAM(M)	STACK VEL(M/SEC)	POTEN. IMPACT (MICRO G/M**3)	EFF HT(M)	GRD-LVL ELEV USER UNITS	BUOY FLUX F M**4/S**3
1 1	0.50	0.70	0.0	600.00	200.0	430.0	5.8	21.0	76.67	769.85	0.0	551.78
2 2	0.40	1.85	0.0	225.00	150.0	425.0	5.2	19.0	43.26	613.59	0.0	391.19
3 3	0.50	1.80	0.0	250.00	150.0	425.0	5.2	19.0	48.07	613.59	0.0	391.19
4 4	1.75	0.85	0.0	70.00	80.0	430.0	3.6	16.0	36.48	353.12	0.0	161.96
5 5	1.75	0.75	0.0	70.00	80.0	430.0	3.6	16.0	36.48	353.12	0.0	161.96
6 6	1.75	0.65	0.0	70.00	80.0	430.0	3.6	16.0	36.48	353.12	0.0	161.96
7 7	2.40	1.50	0.0	100.00	120.0	415.0	5.0	23.0	20.03	599.90	0.0	414.40
8 8	2.50	1.60	0.0	120.00	120.0	415.0	5.0	23.0	24.03	599.90	0.0	414.40
9 9	2.50	1.50	0.0	100.00	120.0	415.0	5.0	23.0	20.03	599.90	0.0	414.40
10 10	1.80	1.85	0.0	85.00	90.0	420.0	4.6	17.0	27.65	458.36	0.0	266.66
11 11	1.95	1.90	0.0	85.00	90.0	420.0	4.6	17.0	27.65	458.36	0.0	266.66
12 12	2.10	1.85	0.0	85.00	90.0	420.0	4.6	17.0	27.65	458.36	0.0	266.66
13 13	2.00	1.75	0.0	60.00	50.0	440.0	3.0	15.0	51.77	267.21	0.0	110.57
14 14	1.90	1.75	0.0	60.00	50.0	440.0	3.0	15.0	51.77	267.21	0.0	110.57
15 15	2.35	1.10	0.0	5.00	30.0	450.0	2.3	12.0	9.51	172.85	0.0	54.30
16 16	2.40	1.10	0.0	5.00	30.0	450.0	2.3	12.0	9.51	172.85	0.0	54.30
17 17	2.45	1.10	0.0	5.00	30.0	450.0	2.3	12.0	9.51	172.85	0.0	54.30
18 18	2.50	1.10	0.0	5.00	30.0	450.0	2.3	12.0	9.51	172.85	0.0	54.30
19 19	2.35	1.00	0.0	5.00	30.0	450.0	2.3	12.0	9.51	172.85	0.0	54.30
20 20	2.40	1.00	0.0	5.00	30.0	450.0	2.3	12.0	9.51	172.85	0.0	54.30
21 21	2.45	1.00	0.0	5.00	30.0	450.0	2.3	12.0	9.51	172.85	0.0	54.30
22 22	2.50	1.00	0.0	5.00	30.0	450.0	2.3	12.0	9.51	172.85	0.0	54.30
23 23	0.85	1.05	0.0	80.00	120.0	420.0	4.8	18.0	20.64	521.19	0.0	307.43
24 24	0.90	1.05	0.0	80.00	120.0	420.0	4.8	18.0	20.64	521.19	0.0	307.43
25 25	0.95	1.05	0.0	80.00	120.0	420.0	4.8	18.0	20.64	521.19	0.0	307.43
26 26	1.00	1.05	0.0	80.00	120.0	420.0	4.8	18.0	20.64	521.19	0.0	307.43
27 27	0.70	2.65	0.0	60.00	100.0	460.0	4.0	20.0	17.74	483.20	0.0	284.80
28 28	0.70	2.60	0.0	60.00	100.0	460.0	4.0	20.0	17.74	483.20	0.0	284.80
29 29	0.70	2.55	0.0	60.00	100.0	460.0	4.0	20.0	17.74	483.20	0.0	284.80
30 30	0.70	2.50	0.0	60.00	100.0	460.0	4.0	20.0	17.74	483.20	0.0	284.80

SIGNIFICANT PART POINT SOURCES

RANK	CHI-MAX (MICROGRAMS/M**3)	SOURCE NO.
1	76.67	1
2	51.77	13
3	51.77	14
4	48.07	3
5	43.26	2
6	36.48	4
7	36.48	5
8	36.48	6
9	27.65	10
10	27.65	11

```
HEIGHT ABOVE 100M FOR POINT SOURCE   1    HEIGHT=200.00 (METERS)   EMISSIONS=    600.00 (G/SEC)
HEIGHT ABOVE 100M FOR POINT SOURCE   2    HEIGHT=150.00 (METERS)   EMISSIONS=    225.00 (G/SEC)
HEIGHT ABOVE 100M FOR POINT SOURCE   3    HEIGHT=150.00 (METERS)   EMISSIONS=    250.00 (G/SEC)
HEIGHT ABOVE 100M FOR POINT SOURCE   7    HEIGHT=120.00 (METERS)   EMISSIONS=    100.00 (G/SEC)
HEIGHT ABOVE 100M FOR POINT SOURCE   8    HEIGHT=120.00 (METERS)   EMISSIONS=    120.00 (G/SEC)
HEIGHT ABOVE 100M FOR POINT SOURCE   9    HEIGHT=120.00 (METERS)   EMISSIONS=    100.00 (G/SEC)
HEIGHT ABOVE 100M FOR POINT SOURCE  23    HEIGHT=120.00 (METERS)   EMISSIONS=     80.00 (G/SEC)
HEIGHT ABOVE 100M FOR POINT SOURCE  24    HEIGHT=120.00 (METERS)   EMISSIONS=     80.00 (G/SEC)
HEIGHT ABOVE 100M FOR POINT SOURCE  25    HEIGHT=120.00 (METERS)   EMISSIONS=     80.00 (G/SEC)
HEIGHT ABOVE 100M FOR POINT SOURCE  26    HEIGHT=120.00 (METERS)   EMISSIONS=     80.00 (G/SEC)
```

TOTAL PART EMISSION AND CUMULATIVE FRACTION ACCORDING TO HEIGHT

HEIGHT(M)	TOTAL POINT EMISSIONS(G/S)	CUMULATIVE FRACTION
0 - 5	0.0	0.0
6 - 10	0.0	0.0
11 - 15	0.0	0.0
16 - 20	0.0	0.0
21 - 25	0.0	0.0
26 - 30	40.00	0.016
31 - 35	0.0	0.016
36 - 40	0.0	0.016
41 - 45	0.0	0.016
46 - 50	120.00	0.062
51 - 55	0.0	0.062
56 - 60	0.0	0.062
61 - 65	0.0	0.062
66 - 70	0.0	0.062
71 - 75	0.0	0.062
76 - 80	210.00	0.143
81 - 85	0.0	0.143
86 - 90	255.00	0.242
91 - 95	0.0	0.242
96 -100	240.00	0.335
TOTAL	2580.00	

ADDITIONAL INFORMATION ON SOURCES.

```
USER SPECIFIED   2 (NPT) SIGNIFICANT POINT SOURCES AS LISTED BY POINT SOURCE NUMBER:
   8   27

EMISSION INFORMATION FOR   30 (NPT) POINT SOURCES HAS BEEN INPUT
10 SIGNIFICANT POINT SOURCES(NSIGP) ARE TO BE USED FOR THIS RUN
THE ORDER OF SIGNIFICANCE(IMPS) FOR 25 OR LESS POINT SOURCES USED IN THIS RUN AS LISTED BY POINT SOURCE NUMBER:
   8   27    1   13   14    3    2    4    5    6
```

RECEPTOR INFORMATION

MPTER INTERNALLY GENERATES 36 RECEPTORS ON A CIRCLE CORRESPONDING TO EACH NON-ZERO RADIAL DISTANCE FROM A CENTER POINT
COORDINATES ARE (USER UNITS) : (2.000, 1.000)
RADIAL DISTANCE(S) USER SPECIFIED (USER UNITS) : 1.000 0.0 0.0 0.0 0.0

RECEPTOR	IDENTIFICATION	EAST COORD (USER UNITS)	NORTH COORD (USER UNITS)	RECEPTOR HT ABV LOCAL GRD LVL (METERS)	RECEPTOR GROUND LEVEL ELEVATION (USER HT UNITS)
1	10, 1.0	2.174	1.985	0.0	0.0
2	20, 1.0	2.342	1.940	0.0	0.0
3	30, 1.0	2.500	1.866	0.0	0.0
4	40, 1.0	2.643	1.766	0.0	0.0
5	50, 1.0	2.766	1.643	0.0	0.0
6	60, 1.0	2.866	1.500	0.0	0.0
7	70, 1.0	2.940	1.342	0.0	0.0
8	80, 1.0	2.985	1.174	0.0	0.0
9	90, 1.0	3.000	1.000	0.0	0.0
10	100, 1.0	2.985	0.826	0.0	0.0
11	110, 1.0	2.940	0.658	0.0	0.0
12	120, 1.0	2.866	0.500	0.0	0.0
13	130, 1.0	2.766	0.357	0.0	0.0
14	140, 1.0	2.643	0.234	0.0	0.0
15	150, 1.0	2.500	0.134	0.0	0.0
16	160, 1.0	2.342	0.060	0.0	0.0
17	170, 1.0	2.174	0.015	0.0	0.0
18	180, 1.0	2.000	0.0	0.0	0.0
19	190, 1.0	1.826	0.015	0.0	0.0
20	200, 1.0	1.658	0.060	0.0	0.0
21	210, 1.0	1.500	0.134	0.0	0.0
22	220, 1.0	1.357	0.234	0.0	0.0
23	230, 1.0	1.234	0.357	0.0	0.0
24	240, 1.0	1.134	0.500	0.0	0.0
25	250, 1.0	1.060	0.658	0.0	0.0
26	260, 1.0	1.015	0.826	0.0	0.0
27	270, 1.0	1.000	1.000	0.0	0.0
28	280, 1.0	1.015	1.174	0.0	0.0
29	290, 1.0	1.060	1.342	0.0	0.0
30	300, 1.0	1.134	1.500	0.0	0.0
31	310, 1.0	1.234	1.643	0.0	0.0
32	320, 1.0	1.357	1.766	0.0	0.0
33	330, 1.0	1.500	1.866	0.0	0.0
34	340, 1.0	1.658	1.940	0.0	0.0
35	350, 1.0	1.826	1.985	0.0	0.0
36	360, 1.0	2.000	2.000	0.0	0.0
37	1	1.000	2.500	0.0	0.0
38	2	1.250	2.400	0.0	0.0

39	3	1.000	2.250	0.0	0.0
40	4	1.250	2.250	0.0	0.0
41	5	1.200	2.000	0.0	0.0
42	6	1.500	2.000	0.0	0.0
43	7	0.750	1.700	0.0	0.0
44	8	1.000	1.600	0.0	0.0
45	9	0.750	1.500	0.0	0.0
46	10	1.000	1.500	0.0	0.0
47	11	0.950	1.250	0.0	0.0
48	12	1.250	1.250	0.0	0.0
49	13	2.000	1.000	0.0	0.0
50	14	2.250	1.250	0.0	0.0
51	15	3.000	1.750	0.0	0.0
52	16	3.000	1.500	0.0	0.0
53	17	3.250	1.500	0.0	0.0
54	18	3.500	1.500	0.0	0.0
55	19	3.500	1.250	0.0	0.0
56	20	3.000	1.000	0.0	0.0
57	21	3.500	1.000	0.0	0.0
58	22	2.500	0.750	0.0	0.0
59	23	2.750	0.750	0.0	0.0
60	24	3.000	0.750	0.0	0.0
61	25	3.250	0.750	0.0	0.0
62	26	1.250	0.500	0.0	0.0
63	27	1.500	0.500	0.0	0.0
64	28	1.750	0.500	0.0	0.0
65	29	2.000	0.500	0.0	0.0
66	30	2.250	0.500	0.0	0.0
67	31	2.500	0.500	0.0	0.0
68	32	3.000	0.500	0.0	0.0
69	33	3.500	0.500	0.0	0.0
70	34	0.750	0.250	0.0	0.0
71	35	2.250	0.250	0.0	0.0
72	36	2.750	0.250	0.0	0.0
73	37	0.500	0.0	0.0	0.0
74	38	0.750	0.0	0.0	0.0
75	39	1.000	0.0	0.0	0.0
76	40	1.250	0.0	0.0	0.0
77	41	1.500	0.0	0.0	0.0
78	42	1.750	0.0	0.0	0.0
79	43	2.000	0.0	0.0	0.0
80	44	2.250	0.0	0.0	0.0
81	45	2.500	0.0	0.0	0.0
82	46	2.750	0.0	0.0	0.0
83	47	3.000	0.0	0.0	0.0
84	48	3.250	0.0	0.0	0.0
85	49	3.500	0.0	0.0	0.0
86	50	3.500	-0.050	0.0	0.0

INPUT MET DATA 79/ 292

HOUR	THETA (DEG)	SPEED (M/S)	MIXING HEIGHT(M)	TEMP (DEG-K)	STABILITY CLASS
12	290.00	2.70	1800.00	298.00	2
13	320.00	2.90	1850.00	299.00	2
14	305.00	3.00	1900.00	299.00	2

RESULTANT MET CONDITIONS

WIND DIRECTION= 305.35 RESULTANT WIND SPEED= 2.80
AVERAGE WIND SPEED= 2.87 AVERAGE TEMP= 298.67
WIND PERSISTENCE= 0.978 MODAL STABILITY= 2

A GRAVITATIONAL SETTLING VELOCITY OF 0.20 (CM/SEC), AND A DEPOSITION VELOCITY OF 2.00 (CM/SEC) HAS BEEN ASSUMED BY THE USER.

APPLICATION FOR 30 SOURCES AND 50 RECEPTORS
POLLUTANT TSP IS BEING MODELED USING 3 HOURS OF MET DATA
DATA FROM 1980 MPTER GUIDE --- EXAMPLE 4 SEPTEMBER 3,1981

PART CONCENTRATION(MICROGRAMS/M**3) FROM SIGNIFICANT POINT SOURCES 79/ 292 : HOUR 12

HOUR	THETA (DEG)	SPEED (M/S)	MIXING HEIGHT(M)	TEMP (K)	STABILITY CLASS
12	290.00	2.70	1800.00	298.00	2

	1	2	3	4	5	6	7	8	9	10
FINAL HT (M)	702.06	566.39	566.39	336.57	336.57	336.57	556.98	556.98	556.98	432.59
FINAL HT (M)	432.59	432.59	261.20	261.20	173.45	173.45	173.45	173.45	173.45	173.45
FINAL HT (M)	173.45	173.45	485.68	485.68	485.68	485.68	455.85	455.85	455.85	455.85
DIST FIN HT (KM)	1.465	1.276	1.276	0.897	0.897	0.897	1.304	1.304	1.304	1.094
DIST FIN HT (KM)	1.094	1.094	0.771	0.771	0.583	0.583	0.583	0.583	0.583	0.583
DIST FIN HT (KM)	0.583	0.583	1.158	1.158	1.158	1.158	1.127	1.127	1.127	1.127

RANK	1	2	3	4	5	6	7	8	9	10	TOTAL SIGNIF POINT	TOTAL ALL POINT SOURCES
SOURCE #	8	27	1	13	14	3	2	4	5	6		
RECEP #												
1	0.0	9.348	0.000	0.0	0.000	0.146	0.298	0.0	0.0	0.0	9.792	39.067
2	0.0	11.969	0.000	0.000	0.000	0.349	0.614	0.0	0.0	0.0	12.932	49.834
3	0.0	13.670	0.000	0.022	0.060	0.913	1.390	0.0	0.0	0.0	16.055	59.630
4	0.000	14.185	0.000	1.270	1.447	2.371	3.173	0.0	0.0	0.0	22.447	72.672
5	0.000	13.312	0.000	7.986	9.226	5.707	6.845	0.000	0.000	0.0	43.077	98.964
6	0.034	11.124	0.000	24.102	27.755	12.136	13.322	0.000	0.000	0.000	80.474	144.019
7	0.136	8.107	0.002	32.509	39.913	22.112	22.654	0.000	0.000	0.000	125.433	173.147
8	0.075	5.038	0.022	21.502	30.530	33.816	32.928	0.003	0.000	0.000	123.915	157.795
9	0.011	2.606	0.171	7.240	12.804	42.821	40.290	0.160	0.020	0.002	106.125	141.078
10	0.000	1.095	0.878	1.190	2.849	44.454	41.045	2.148	0.542	0.093	94.296	152.783
11	0.000	0.364	3.135	0.085	0.306	37.537	34.523	9.897	4.336	1.360	91.543	142.667
12	0.000	0.093	8.057	0.002	0.013	25.602	23.813	18.268	12.888	6.763	95.499	154.945
13	0.000	0.018	15.333	0.000	0.000	14.016	13.398	14.055	15.469	12.995	85.285	148.631
14	0.0	0.002	22.147	0.000	0.000	6.125	6.127	4.202	7.259	9.741	55.604	104.782
15	0.0	0.000	24.805	0.000	0.000	2.129	2.275	0.399	1.133	2.628	33.370	61.001
16	0.0	0.000	21.986	0.000	0.000	0.589	0.689	0.008	0.047	0.218	23.539	34.770
17	0.0	0.000	15.771	0.0	0.0	0.131	0.172	0.000	0.000	0.002	16.076	19.388
18	0.0	0.000	9.414	0.0	0.0	0.024	0.037	0.000	0.000	0.000	9.475	10.195
19	0.0	0.000	4.860	0.0	0.0	0.004	0.007	0.0	0.000	0.000	4.871	4.992
20	0.0	0.000	2.937	0.0	0.0	0.001	0.001	0.0	0.0	0.0	2.939	2.956
21	0.0	0.000	1.722	0.0	0.0	0.000	0.000	0.0	0.0	0.0	1.722	1.724
22	0.0	0.000	0.952	0.0	0.0	0.000	0.000	0.0	0.0	0.0	0.952	0.953
23	0.0	0.000	0.454	0.0	0.0	0.000	0.000	0.0	0.0	0.0	0.454	0.454
24	0.0	0.000	0.135	0.0	0.0	0.000	0.000	0.0	0.0	0.0	0.135	0.135
25	0.0	0.000	0.010	0.0	0.0	0.000	0.000	0.0	0.0	0.0	0.011	0.011

26	0.0	0.000	0.000	0.0	0.0	0.000	0.000	0.0	0.0	0.0	0.000	0.000
27	0.0	0.000	0.000	0.0	0.0	0.000	0.002	0.0	0.0	0.0	0.002	0.002
28	0.0	0.000	0.000	0.0	0.0	0.007	0.027	0.0	0.0	0.0	0.035	0.035
29	0.0	0.000	0.0	0.0	0.0	0.124	0.281	0.0	0.0	0.0	0.405	0.405
30	0.0	0.000	0.0	0.0	0.0	0.596	1.046	0.0	0.0	0.0	1.642	1.642
31	0.0	0.000	0.0	0.0	0.0	0.700	1.265	0.0	0.0	0.0	1.966	1.966
32	0.0	0.004	0.0	0.0	0.0	0.338	0.720	0.0	0.0	0.0	1.062	1.116
33	0.0	0.117	0.0	0.0	0.0	0.134	0.328	0.0	0.0	0.0	0.579	1.571
34	0.0	0.848	0.0	0.0	0.0	0.070	0.178	0.0	0.0	0.0	1.096	5.602
35	0.0	2.969	0.0	0.0	0.0	0.058	0.139	0.0	0.0	0.0	3.166	14.795
36	0.0	6.131	0.000	0.0	0.0	0.075	0.176	0.0	0.0	0.0	6.382	27.008
37	0.0	0.034	0.0	0.0	0.0	0.0	0.0	0.0	0.0	0.0	0.034	0.078
38	0.0	0.663	0.0	0.0	0.0	0.000	0.000	0.0	0.0	0.0	0.663	2.190
39	0.0	0.001	0.0	0.0	0.0	0.000	0.000	0.0	0.0	0.0	0.001	0.029
40	0.0	0.317	0.0	0.0	0.0	0.000	0.000	0.0	0.0	0.0	0.317	2.025
41	0.0	0.005	0.0	0.0	0.0	0.000	0.006	0.0	0.0	0.0	0.012	0.098
42	0.0	0.422	0.0	0.0	0.0	0.010	0.042	0.0	0.0	0.0	0.474	3.190
43	0.0	0.0	0.0	0.0	0.0	0.000	0.007	0.0	0.0	0.0	0.007	0.007
44	0.0	0.000	0.0	0.0	0.0	0.142	0.398	0.0	0.0	0.0	0.540	0.540
45	0.0	0.0	0.0	0.0	0.0	0.000	0.003	0.0	0.0	0.0	0.003	0.003
46	0.0	0.000	0.0	0.0	0.0	0.137	0.353	0.0	0.0	0.0	0.490	0.490
47	0.0	0.000	0.0	0.0	0.0	0.004	0.020	0.0	0.0	0.0	0.024	0.024
48	0.0	0.000	0.000	0.0	0.0	0.584	0.880	0.0	0.0	0.0	1.464	1.464
49	0.0	0.005	0.015	0.0	0.000	11.762	12.947	0.000	0.000	0.0	24.729	26.935
50	0.0	0.428	0.001	0.000	0.009	21.703	23.269	0.000	0.0	0.0	45.410	48.169
51	0.000	17.465	0.000	2.774	3.052	2.839	3.522	0.000	0.000	0.0	29.653	88.525
52	0.156	12.982	0.000	28.582	29.864	11.818	12.825	0.000	0.000	0.000	96.227	161.928
53	0.548	15.488	0.000	29.198	27.630	10.880	11.610	0.000	0.000	0.000	95.354	177.919
54	0.892	16.622	0.001	24.474	22.191	9.721	10.245	0.000	0.000	0.000	84.146	176.241
55	2.714	12.184	0.023	50.686	48.833	23.697	23.163	0.005	0.001	0.000	161.305	265.006
56	0.011	2.606	0.171	7.240	12.804	42.821	40.290	0.160	0.020	0.002	106.125	141.078
57	1.801	6.922	0.279	38.225	42.145	39.900	37.093	0.343	0.079	0.014	166.801	252.973
58	0.0	0.054	1.026	0.000	0.000	24.068	23.361	2.680	0.693	0.080	51.961	75.722
59	0.000	0.254	1.367	0.013	0.080	34.947	32.752	3.602	1.054	0.191	74.260	106.077
60	0.000	0.780	1.653	0.585	1.532	43.136	39.606	4.912	1.632	0.382	94.217	156.112
61	0.033	1.755	1.857	4.444	7.483	47.601	43.212	5.243	1.942	0.551	114.122	215.292
62	0.0	0.000	0.351	0.0	0.0	0.000	0.000	0.0	0.0	0.0	0.351	0.352
63	0.0	0.000	1.147	0.0	0.0	0.009	0.018	0.0	0.0	0.0	1.173	1.501
64	0.0	0.000	2.076	0.0	0.0	0.170	0.253	0.0	0.0	0.000	2.498	6.025
65	0.0	0.000	2.891	0.0	0.0	1.242	1.512	0.001	0.019	0.080	5.745	17.288
66	0.0	0.000	4.623	0.000	0.000	4.725	5.071	1.141	2.174	2.014	19.747	47.413
67	0.0	0.007	6.307	0.000	0.000	11.568	11.478	6.126	6.325	4.101	45.911	90.681
68	0.000	0.189	8.416	0.023	0.091	30.789	28.234	21.520	14.522	7.570	111.353	175.108
69	0.051	1.186	8.590	2.563	4.168	44.550	39.727	21.253	13.390	7.154	142.630	255.892
70	0.0	0.0	0.000	0.0	0.0	0.000	0.000	0.0	0.0	0.0	0.000	0.000
71	0.0	0.000	13.349	0.000	0.000	1.162	1.337	0.031	0.169	0.672	16.719	33.592
72	0.000	0.007	22.561	0.000	0.000	9.098	8.853	9.010	12.982	14.776	77.288	136.408
73	0.0	0.0	0.0	0.0	0.0	0.0	0.0	0.0	0.0	0.0	0.0	0.0
74	0.0	0.0	0.000	0.0	0.0	0.000	0.000	0.0	0.0	0.0	0.000	0.000
75	0.0	0.0	0.001	0.0	0.0	0.000	0.000	0.0	0.0	0.0	0.001	0.001
76	0.0	0.000	0.101	0.0	0.0	0.000	0.000	0.0	0.0	0.0	0.101	0.101
77	0.0	0.000	1.047	0.0	0.0	0.000	0.000	0.0	0.0	0.0	1.047	1.047
78	0.0	0.000	3.579	0.0	0.0	0.001	0.002	0.0	0.0	0.0	3.583	3.618
79	0.0	0.000	9.414	0.0	0.0	0.024	0.037	0.000	0.000	0.000	9.475	10.195

80	0.0	0.000	18.932	0.0	0.000	0.209	0.263	0.000	0.002	0.012	19.418	24.332
81	0.0	0.000	29.662	0.000	0.000	0.984	1.090	0.072	0.267	0.815	32.891	79.458
82	0.000	0.001	38.923	0.000	0.000	3.006	3.063	1.567	3.581	6.940	57.080	92.372
83	0.000	0.007	45.054	0.000	0.000	6.742	6.495	8.001	13.450	19.626	99.375	155.002
84	0.000	0.031	47.723	0.001	0.005	12.071	11.203	18.831	25.750	31.191	146.806	218.700
85	0.000	0.104	47.477	0.027	0.069	18.300	16.575	28.701	34.006	36.297	181.557	253.933
86	0.000	0.079	52.071	0.016	0.043	15.995	14.545	25.428	31.633	35.616	175.427	254.211

APPLICATION FOR 30 SOURCES AND 50 RECEPTORS
POLLUTANT TSP IS BEING MODELED USING 3 HOURS OF MET DATA
DATA FROM 1980 MPTER GUIDE --- EXAMPLE 4 SEPTEMBER 3,1981

PART SURFACE DEPOSITION FLUX (KG/KM**2/HOUR) FROM SIGNIFICANT POINT SOURCES 79/ 292 : HOUR 12

RANK	1	2	3	4	5	6	7	8	9	10	TOTAL SIGNIF POINT	TOTAL ALL POINT SOURCES
SOURCE #	8	27	1	13	14	3	2	4	5	6		
GRD LVL RECEP.												
1	0.0	0.673	0.000	0.0	0.000	0.011	0.021	0.0	0.0	0.0	0.705	2.813
2	0.0	0.862	0.000	0.000	0.000	0.025	0.044	0.0	0.0	0.0	0.931	3.589
3	0.0	0.984	0.000	0.002	0.004	0.066	0.100	0.0	0.0	0.0	1.156	4.293
4	0.000	1.021	0.000	0.091	0.104	0.171	0.228	0.0	0.0	0.0	1.616	5.232
5	0.000	0.958	0.000	0.575	0.664	0.411	0.493	0.000	0.000	0.0	3.102	7.125
6	0.002	0.801	0.000	1.735	1.998	0.874	0.959	0.000	0.000	0.000	6.370	10.369
7	0.010	0.584	0.000	2.341	2.874	1.592	1.631	0.000	0.000	0.000	9.031	12.467
8	0.005	0.363	0.002	1.548	2.198	2.435	2.371	0.000	0.000	0.000	8.922	11.361
9	0.001	0.188	0.012	0.521	0.922	3.083	2.901	0.012	0.001	0.000	7.641	10.158
10	0.000	0.079	0.063	0.086	0.205	3.201	2.955	0.155	0.039	0.007	6.789	11.000
11	0.000	0.026	0.226	0.006	0.022	2.703	2.486	0.713	0.312	0.098	6.591	10.272
12	0.000	0.007	0.580	0.000	0.001	1.843	1.715	1.315	0.928	0.487	6.876	11.156
13	0.000	0.001	1.104	0.000	0.000	1.009	0.965	1.012	1.114	0.936	6.140	10.701
14	0.0	0.000	1.595	0.000	0.000	0.441	0.441	0.303	0.523	0.701	4.003	7.584
15	0.0	0.000	1.786	0.000	0.000	0.153	0.164	0.029	0.082	0.189	2.403	4.392
16	0.0	0.000	1.583	0.000	0.000	0.042	0.050	0.001	0.003	0.016	1.695	2.503
17	0.0	0.000	1.136	0.0	0.0	0.009	0.012	0.000	0.000	0.000	1.157	1.396
18	0.0	0.000	0.678	0.0	0.0	0.002	0.003	0.000	0.000	0.000	0.682	0.734
19	0.0	0.000	0.350	0.0	0.0	0.000	0.001	0.0	0.000	0.000	0.351	0.359
20	0.0	0.000	0.211	0.0	0.0	0.000	0.000	0.0	0.0	0.0	0.212	0.213
21	0.0	0.000	0.124	0.0	0.0	0.000	0.000	0.0	0.0	0.0	0.124	0.124
22	0.0	0.000	0.069	0.0	0.0	0.000	0.000	0.0	0.0	0.0	0.069	0.069
23	0.0	0.000	0.033	0.0	0.0	0.000	0.000	0.0	0.0	0.0	0.033	0.033
24	0.0	0.000	0.010	0.0	0.0	0.000	0.000	0.0	0.0	0.0	0.010	0.010
25	0.0	0.000	0.001	0.0	0.0	0.000	0.000	0.0	0.0	0.0	0.001	0.001
26	0.0	0.000	0.000	0.0	0.0	0.000	0.000	0.0	0.0	0.0	0.000	0.000
27	0.0	0.000	0.000	0.0	0.0	0.000	0.000	0.0	0.0	0.0	0.000	0.000
28	0.0	0.000	0.000	0.0	0.0	0.001	0.002	0.0	0.0	0.0	0.002	0.002
29	0.0	0.000	0.0	0.0	0.0	0.009	0.020	0.0	0.0	0.0	0.029	0.029
30	0.0	0.000	0.0	0.0	0.0	0.043	0.075	0.0	0.0	0.0	0.118	0.118
31	0.0	0.000	0.0	0.0	0.0	0.050	0.091	0.0	0.0	0.0	0.142	0.142
32	0.0	0.000	0.0	0.0	0.0	0.024	0.052	0.0	0.0	0.0	0.076	0.080
33	0.0	0.008	0.0	0.0	0.0	0.010	0.024	0.0	0.0	0.0	0.042	0.113
34	0.0	0.061	0.0	0.0	0.0	0.005	0.013	0.0	0.0	0.0	0.079	0.403
35	0.0	0.214	0.0	0.0	0.0	0.004	0.010	0.0	0.0	0.0	0.228	1.065

36	0.0	0.441	0.000	0.0	0.0	0.005	0.013	0.0	0.0	0.0	0.460	1.945
37	0.0	0.002	0.0	0.0	0.0	0.0	0.0	0.0	0.0	0.0	0.002	0.006
38	0.0	0.048	0.0	0.0	0.0	0.000	0.000	0.0	0.0	0.0	0.048	0.158
39	0.0	0.000	0.0	0.0	0.0	0.000	0.000	0.0	0.0	0.0	0.000	0.002
40	0.0	0.023	0.0	0.0	0.0	0.000	0.000	0.0	0.0	0.0	0.023	0.146
41	0.0	0.000	0.0	0.0	0.0	0.000	0.000	0.0	0.0	0.0	0.001	0.007
42	0.0	0.030	0.0	0.0	0.0	0.001	0.003	0.0	0.0	0.0	0.034	0.230
43	0.0	0.0	0.0	0.0	0.0	0.000	0.001	0.0	0.0	0.0	0.001	0.001
44	0.0	0.000	0.0	0.0	0.0	0.010	0.029	0.0	0.0	0.0	0.039	0.039
45	0.0	0.0	0.0	0.0	0.0	0.000	0.000	0.0	0.0	0.0	0.000	0.000
46	0.0	0.000	0.0	0.0	0.0	0.010	0.025	0.0	0.0	0.0	0.035	0.035
47	0.0	0.000	0.0	0.0	0.0	0.000	0.001	0.0	0.0	0.0	0.002	0.002
48	0.0	0.000	0.000	0.0	0.0	0.042	0.063	0.0	0.0	0.0	0.105	0.105
49	0.0	0.000	0.001	0.0	0.000	0.847	0.932	0.000	0.000	0.0	1.781	1.939
50	0.0	0.031	0.000	0.000	0.001	1.563	1.675	0.000	0.0	0.0	3.270	3.468
51	0.000	1.257	0.000	0.200	0.220	0.204	0.254	0.000	0.000	0.0	2.135	6.374
52	0.011	0.935	0.000	2.058	2.150	0.851	0.923	0.000	0.000	0.000	6.928	11.659
53	0.039	1.115	0.000	2.102	1.989	0.783	0.836	0.000	0.000	0.000	6.866	12.810
54	0.064	1.197	0.000	1.762	1.598	0.700	0.738	0.000	0.000	0.000	6.058	12.689
55	0.195	0.877	0.002	3.649	3.516	1.706	1.668	0.000	0.000	0.000	11.614	19.080
56	0.001	0.188	0.012	0.521	0.922	3.083	2.901	0.012	0.001	0.000	7.641	10.158
57	0.130	0.498	0.020	2.752	3.034	2.873	2.671	0.025	0.006	0.001	12.010	18.214
58	0.0	0.004	0.074	0.000	0.000	1.733	1.682	0.193	0.050	0.006	3.741	5.452
59	0.000	0.018	0.098	0.001	0.006	2.516	2.358	0.259	0.076	0.014	5.347	7.638
60	0.000	0.056	0.119	0.042	0.110	3.106	2.852	0.354	0.117	0.028	6.784	11.240
61	0.002	0.126	0.134	0.320	0.539	3.427	3.111	0.378	0.140	0.040	8.217	15.501
62	0.0	0.000	0.025	0.0	0.0	0.000	0.000	0.0	0.0	0.0	0.025	0.025
63	0.0	0.000	0.083	0.0	0.0	0.001	0.001	0.0	0.0	0.0	0.084	0.108
64	0.0	0.000	0.149	0.0	0.0	0.012	0.018	0.0	0.0	0.000	0.180	0.434
65	0.0	0.000	0.208	0.0	0.0	0.089	0.109	0.000	0.001	0.006	0.414	1.245
66	0.0	0.000	0.333	0.000	0.000	0.340	0.365	0.082	0.157	0.145	1.422	3.414
67	0.0	0.000	0.454	0.000	0.000	0.833	0.826	0.441	0.455	0.295	3.306	6.529
68	0.000	0.014	0.606	0.002	0.007	2.217	2.033	1.549	1.046	0.545	8.017	12.608
69	0.004	0.085	0.618	0.185	0.300	3.208	2.860	1.530	0.964	0.515	10.269	18.424
70	0.0	0.0	0.000	0.0	0.0	0.000	0.000	0.0	0.0	0.0	0.000	0.000
71	0.0	0.000	0.961	0.000	0.000	0.084	0.096	0.002	0.012	0.048	1.204	2.419
72	0.000	0.000	1.624	0.000	0.000	0.655	0.637	0.649	0.935	1.064	5.565	9.821
73	0.0	0.0	0.0	0.0	0.0	0.0	0.0	0.0	0.0	0.0	0.0	0.0
74	0.0	0.0	0.000	0.0	0.0	0.000	0.000	0.0	0.0	0.0	0.000	0.000
75	0.0	0.0	0.000	0.0	0.0	0.000	0.000	0.0	0.0	0.0	0.000	0.000
76	0.0	0.000	0.007	0.0	0.0	0.000	0.000	0.0	0.0	0.0	0.007	0.007
77	0.0	0.000	0.075	0.0	0.0	0.000	0.000	0.0	0.0	0.0	0.075	0.075
78	0.0	0.000	0.258	0.0	0.0	0.000	0.000	0.0	0.0	0.0	0.258	0.261
79	0.0	0.000	0.678	0.0	0.0	0.002	0.003	0.000	0.000	0.000	0.682	0.734
80	0.0	0.000	1.363	0.0	0.000	0.015	0.019	0.000	0.000	0.001	1.398	1.752
81	0.0	0.000	2.136	0.000	0.000	0.071	0.078	0.005	0.019	0.059	2.368	3.561
82	0.000	0.000	2.802	0.000	0.000	0.216	0.221	0.113	0.258	0.500	4.110	6.651
83	0.000	0.000	3.244	0.000	0.000	0.485	0.468	0.576	0.968	1.413	7.155	11.160
84	0.000	0.002	3.436	0.000	0.000	0.869	0.807	1.356	1.854	2.246	10.570	15.746
85	0.000	0.008	3.418	0.002	0.005	1.318	1.193	2.066	2.448	2.613	13.072	19.003
86	0.000	0.006	3.749	0.001	0.003	1.152	1.047	1.831	2.278	2.564	12.631	18.303

APPLICATION FOR 30 SOURCES AND 50 RECEPTORS
POLLUTANT TSP IS BEING MODELED USING 3 HOURS OF MET DATA
DATA FROM 1980 MPTER GUIDE --- EXAMPLE 4 SEPTEMBER 3,1981

PART SUMMARY CONCENTRATION TABLE(MICROGRAMS/M**3) 79/ 292 : HOUR 12

RECEPTOR NO.	NAME	EAST COORD	NORTH COORD	RECEPTOR HT ABV GRD (M)	RECEPTOR GRD-LVL ELEV (USER HT UNITS)	TOTAL FROM SIGNIF POINT SOURCES	TOTAL FROM ALL SOURCES	CONCENTRATION RANK
1	10, 1.0	2.17	1.98	0.0	0.0	9.7919	39.0668	38
2	20, 1.0	2.34	1.94	0.0	0.0	12.9322	49.8337	34
3	30, 1.0	2.50	1.87	0.0	0.0	16.0552	59.6304	33
4	40, 1.0	2.64	1.77	0.0	0.0	22.4467	72.6717	31
5	50, 1.0	2.77	1.64	0.0	0.0	43.0767	98.9644	26
6	60, 1.0	2.87	1.50	0.0	0.0	88.4737	144.0190	19
7	70, 1.0	2.94	1.34	0.0	0.0	125.4326	173.1472	11
8	80, 1.0	2.98	1.17	0.0	0.0	123.9145	157.7949	13
9	90, 1.0	3.00	1.00	0.0	0.0	106.1249	141.0781	21
10	100, 1.0	2.98	0.83	0.0	0.0	94.2955	152.7832	17
11	110, 1.0	2.94	0.66	0.0	0.0	91.5431	142.6672	20
12	120, 1.0	2.87	0.50	0.0	0.0	95.4990	154.9454	16
13	130, 1.0	2.77	0.36	0.0	0.0	85.2845	148.6314	18
14	140, 1.0	2.64	0.23	0.0	0.0	55.6036	104.7823	25
15	150, 1.0	2.50	0.13	0.0	0.0	33.3700	61.0011	32
16	160, 1.0	2.34	0.06	0.0	0.0	23.5386	34.7696	39
17	170, 1.0	2.17	0.02	0.0	0.0	16.0762	19.3878	44
18	180, 1.0	2.00	0.0	0.0	0.0	9.4751	10.1946	47
19	190, 1.0	1.83	0.02	0.0	0.0	4.8712	4.9918	51
20	200, 1.0	1.66	0.06	0.0	0.0	2.9389	2.9564	54
21	210, 1.0	1.50	0.13	0.0	0.0	1.7224	1.7245	58
22	220, 1.0	1.36	0.23	0.0	0.0	0.9525	0.9527	65
23	230, 1.0	1.23	0.36	0.0	0.0	0.4542	0.4542	68
24	240, 1.0	1.13	0.50	0.0	0.0	0.1350	0.1350	71
25	250, 1.0	1.06	0.66	0.0	0.0	0.0105	0.0105	78
26	260, 1.0	1.02	0.83	0.0	0.0	0.0002	0.0002	83
27	270, 1.0	1.00	1.00	0.0	0.0	0.0021	0.0021	81
28	280, 1.0	1.02	1.17	0.0	0.0	0.0347	0.0347	75
29	290, 1.0	1.06	1.34	0.0	0.0	0.4049	0.4049	69
30	300, 1.0	1.13	1.50	0.0	0.0	1.6420	1.6420	59
31	310, 1.0	1.23	1.64	0.0	0.0	1.9657	1.9661	57
32	320, 1.0	1.36	1.77	0.0	0.0	1.0620	1.1164	63
33	330, 1.0	1.50	1.87	0.0	0.0	0.5795	1.5706	60
34	340, 1.0	1.66	1.94	0.0	0.0	1.0958	5.6022	50
35	350, 1.0	1.83	1.98	0.0	0.0	3.1657	14.7950	46
36	360, 1.0	2.00	2.00	0.0	0.0	6.3825	27.0078	41
37	1	1.00	2.50	0.0	0.0	0.0336	0.0776	74

38	2	1.25	2.40	0.0	0.0	0.6631	2.1899	55
39	3	1.00	2.25	0.0	0.0	0.0011	0.0292	76
40	4	1.25	2.25	0.0	0.0	0.3174	2.0245	56
41	5	1.20	2.00	0.0	0.0	0.0117	0.0979	73
42	6	1.50	2.00	0.0	0.0	0.4743	3.1900	53
43	7	0.75	1.70	0.0	0.0	0.0073	0.0073	79
44	8	1.00	1.60	0.0	0.0	0.5402	0.5402	66
45	9	0.75	1.50	0.0	0.0	0.0030	0.0030	80
46	10	1.00	1.50	0.0	0.0	0.4903	0.4903	67
47	11	0.95	1.25	0.0	0.0	0.0245	0.0245	77
48	12	1.25	1.25	0.0	0.0	1.4640	1.4640	62
49	13	2.00	1.00	0.0	0.0	24.7292	26.9348	42
50	14	2.25	1.25	0.0	0.0	45.4099	48.1692	36
51	15	3.00	1.75	0.0	0.0	29.6534	88.5253	29
52	16	3.00	1.50	0.0	0.0	96.2273	161.9280	12
53	17	3.25	1.50	0.0	0.0	95.3543	177.9185	8
54	18	3.50	1.50	0.0	0.0	84.1455	176.2408	9
55	19	3.50	1.25	0.0	0.0	161.3049	265.0064	1
56	20	3.00	1.00	0.0	0.0	106.1249	141.0781	22
57	21	3.50	1.00	0.0	0.0	166.8014	252.9726	5
58	22	2.50	0.75	0.0	0.0	51.9610	75.7216	30
59	23	2.75	0.75	0.0	0.0	74.2603	106.0766	24
60	24	3.00	0.75	0.0	0.0	94.2168	156.1120	14
61	25	3.25	0.75	0.0	0.0	114.1219	215.2915	7
62	26	1.25	0.50	0.0	0.0	0.3512	0.3523	70
63	27	1.50	0.50	0.0	0.0	1.1729	1.5009	61
64	28	1.75	0.50	0.0	0.0	2.4983	6.0248	49
65	29	2.00	0.50	0.0	0.0	5.7454	17.2876	45
66	30	2.25	0.50	0.0	0.0	19.7473	47.4132	37
67	31	2.50	0.50	0.0	0.0	45.9111	90.6807	28
68	32	3.00	0.50	0.0	0.0	111.3528	175.1084	10
69	33	3.50	0.50	0.0	0.0	142.6299	255.8916	3
70	34	0.75	0.25	0.0	0.0	0.0000	0.0000	84
71	35	2.25	0.25	0.0	0.0	16.7190	33.5916	40
72	36	2.75	0.25	0.0	0.0	77.2878	136.4075	23
73	37	0.50	0.0	0.0	0.0	0.0	0.0	86
74	38	0.75	0.0	0.0	0.0	0.0000	0.0000	85
75	39	1.00	0.0	0.0	0.0	0.0007	0.0007	82
76	40	1.25	0.0	0.0	0.0	0.1009	0.1009	72
77	41	1.50	0.0	0.0	0.0	1.0467	1.0469	64
78	42	1.75	0.0	0.0	0.0	3.5829	3.6181	52
79	43	2.00	0.0	0.0	0.0	9.4751	10.1946	48
80	44	2.25	0.0	0.0	0.0	19.4176	24.3323	43
81	45	2.50	0.0	0.0	0.0	32.8908	49.4582	35
82	46	2.75	0.0	0.0	0.0	57.0805	92.3717	27
83	47	3.00	0.0	0.0	0.0	99.3748	155.0021	15
84	48	3.25	0.0	0.0	0.0	146.8058	218.6997	6
85	49	3.50	0.0	0.0	0.0	181.5568	263.9326	2
86	50	3.50	-0.05	0.0	0.0	175.4271	254.2112	4

APPLICATION FOR 30 SOURCES AND 50 RECEPTORS
POLLUTANT TSP IS BEING MODELED USING 3 HOURS OF MET DATA
DATA FROM 1980 MPTER GUIDE --- EXAMPLE 4 SEPTEMBER 3,1981

PART SUMMARY TABLE OF DEPOSITION FLUX (KG/KM**2/HOUR) 79/ 292 : HOUR 12
(GROUND LEVEL RECEPTORS ONLY)

RECEPTOR NO.	NAME	EAST COORD	NORTH COORD	RECEPTOR HT ABV GRD (M)	RECEPTOR GRD-LVL ELEV (USER HT UNITS)	TOTAL FROM SIGNIF POINT SOURCES	TOTAL FROM ALL SOURCES	CONCENTRATION RANK
1	10, 1.0	2.17	1.98	0.0	0.0	0.7050	2.8128	38
2	20, 1.0	2.34	1.94	0.0	0.0	0.9311	3.5880	34
3	30, 1.0	2.50	1.87	0.0	0.0	1.1560	4.2934	33
4	40, 1.0	2.64	1.77	0.0	0.0	1.6162	5.2324	31
5	50, 1.0	2.77	1.64	0.0	0.0	3.1015	7.1254	26
6	60, 1.0	2.87	1.50	0.0	0.0	6.3701	10.3694	19
7	70, 1.0	2.94	1.34	0.0	0.0	9.0311	12.4666	11
8	80, 1.0	2.98	1.17	0.0	0.0	8.9218	11.3612	13
9	90, 1.0	3.00	1.00	0.0	0.0	7.6410	10.1576	21
10	100, 1.0	2.98	0.83	0.0	0.0	6.7893	11.0004	17
11	110, 1.0	2.94	0.66	0.0	0.0	6.5911	10.2720	20
12	120, 1.0	2.87	0.50	0.0	0.0	6.8759	11.1561	16
13	130, 1.0	2.77	0.36	0.0	0.0	6.1405	10.7015	18
14	140, 1.0	2.64	0.23	0.0	0.0	4.0035	7.5443	25
15	150, 1.0	2.50	0.13	0.0	0.0	2.4026	4.3921	32
16	160, 1.0	2.34	0.06	0.0	0.0	1.6948	2.5034	39
17	170, 1.0	2.17	0.02	0.0	0.0	1.1575	1.3959	44
18	180, 1.0	2.00	0.0	0.0	0.0	0.6822	0.7340	47
19	190, 1.0	1.83	0.02	0.0	0.0	0.3507	0.3594	51
20	200, 1.0	1.66	0.06	0.0	0.0	0.2116	0.2129	54
21	210, 1.0	1.50	0.13	0.0	0.0	0.1240	0.1242	58
22	220, 1.0	1.36	0.23	0.0	0.0	0.0686	0.0686	65
23	230, 1.0	1.23	0.36	0.0	0.0	0.0327	0.0327	68
24	240, 1.0	1.13	0.50	0.0	0.0	0.0097	0.0097	71
25	250, 1.0	1.06	0.66	0.0	0.0	0.0008	0.0009	78
26	260, 1.0	1.02	0.83	0.0	0.0	0.0000	0.0000	83
27	270, 1.0	1.00	1.00	0.0	0.0	0.0001	0.0001	81
28	280, 1.0	1.02	1.17	0.0	0.0	0.0025	0.0025	75
29	290, 1.0	1.06	1.34	0.0	0.0	0.0292	0.0292	69
30	300, 1.0	1.13	1.50	0.0	0.0	0.1182	0.1182	59
31	310, 1.0	1.23	1.64	0.0	0.0	0.1415	0.1416	57
32	320, 1.0	1.36	1.77	0.0	0.0	0.0765	0.0804	63
33	330, 1.0	1.50	1.87	0.0	0.0	0.0417	0.1131	60
34	340, 1.0	1.66	1.94	0.0	0.0	0.0789	0.4034	50
35	350, 1.0	1.83	1.98	0.0	0.0	0.2279	1.0652	46
36	360, 1.0	2.00	2.00	0.0	0.0	0.4595	1.9446	41
37	1	1.00	2.50	0.0	0.0	0.0024	0.0056	74

38	2	1.25	2.40	0.0	0.0	0.0477	0.1577	55
39	3	1.00	2.25	0.0	0.0	0.0001	0.0021	76
40	4	1.25	2.25	0.0	0.0	0.0229	0.1458	56
41	5	1.20	2.00	0.0	0.0	0.0008	0.0070	73
42	6	1.50	2.00	0.0	0.0	0.0341	0.2297	53
43	7	0.75	1.70	0.0	0.0	0.0005	0.0005	79
44	8	1.00	1.60	0.0	0.0	0.0389	0.0389	66
45	9	0.75	1.50	0.0	0.0	0.0002	0.0002	80
46	10	1.00	1.50	0.0	0.0	0.0353	0.0353	67
47	11	0.95	1.25	0.0	0.0	0.0018	0.0018	77
48	12	1.25	1.25	0.0	0.0	0.1054	0.1054	62
49	13	2.00	1.00	0.0	0.0	1.7805	1.9393	42
50	14	2.25	1.25	0.0	0.0	3.2695	3.4682	36
51	15	3.00	1.75	0.0	0.0	2.1350	6.3738	29
52	16	3.00	1.50	0.0	0.0	6.9284	11.6588	12
53	17	3.25	1.50	0.0	0.0	6.8655	12.8101	8
54	18	3.50	1.50	0.0	0.0	6.0585	12.6893	9
55	19	3.50	1.25	0.0	0.0	11.6140	19.0804	1
56	20	3.00	1.00	0.0	0.0	7.6410	10.1576	22
57	21	3.50	1.00	0.0	0.0	12.0097	18.2140	5
58	22	2.50	0.75	0.0	0.0	3.7412	5.4520	30
59	23	2.75	0.75	0.0	0.0	5.3467	7.6375	24
60	24	3.00	0.75	0.0	0.0	6.7836	11.2401	14
61	25	3.25	0.75	0.0	0.0	8.2168	15.5010	7
62	26	1.25	0.50	0.0	0.0	0.0253	0.0254	70
63	27	1.50	0.50	0.0	0.0	0.0844	0.1081	61
64	28	1.75	0.50	0.0	0.0	0.1799	0.4338	49
65	29	2.00	0.50	0.0	0.0	0.4137	1.2447	45
66	30	2.25	0.50	0.0	0.0	1.4218	3.4138	37
67	31	2.50	0.50	0.0	0.0	3.3056	6.5290	28
68	32	3.00	0.50	0.0	0.0	8.0174	12.6078	10
69	33	3.50	0.50	0.0	0.0	10.2694	18.4242	3
70	34	0.75	0.25	0.0	0.0	0.0000	0.0000	84
71	35	2.25	0.25	0.0	0.0	1.2038	2.4186	40
72	36	2.75	0.25	0.0	0.0	5.5647	9.8213	23
73	37	0.50	0.0	0.0	0.0	0.0	0.0	86
74	38	0.75	0.0	0.0	0.0	0.0000	0.0000	85
75	39	1.00	0.0	0.0	0.0	0.0001	0.0001	82
76	40	1.25	0.0	0.0	0.0	0.0073	0.0073	72
77	41	1.50	0.0	0.0	0.0	0.0754	0.0754	64
78	42	1.75	0.0	0.0	0.0	0.2580	0.2605	52
79	43	2.00	0.0	0.0	0.0	0.6822	0.7340	48
80	44	2.25	0.0	0.0	0.0	1.3981	1.7519	43
81	45	2.50	0.0	0.0	0.0	2.3681	3.5610	35
82	46	2.75	0.0	0.0	0.0	4.1098	6.6508	27
83	47	3.00	0.0	0.0	0.0	7.1550	11.1602	15
84	48	3.25	0.0	0.0	0.0	10.5700	15.7464	6
85	49	3.50	0.0	0.0	0.0	13.0721	19.0031	2
86	50	3.50	-0.05	0.0	0.0	12.6307	18.3032	4

APPLICATION FOR 30 SOURCES AND 50 RECEPTORS
POLLUTANT TSP IS BEING MODELED USING 3 HOURS OF MET DATA
DATA FROM 1980 MPTER GUIDE --- EXAMPLE 4 SEPTEMBER 3,1981

PART CONCENTRATION(MICROGRAMS/M**3) FROM SIGNIFICANT POINT SOURCES 79/ 292 : HOUR 13

HOUR	THETA (DEG)	SPEED (M/S)	MIXING HEIGHT(M)	TEMP (K)	STABILITY CLASS
13	320.00	2.90	1850.00	299.00	2

	1	2	3	4	5	6	7	8	9	10
FINAL HT (M)	665.31	535.84	535.84	317.79	317.79	317.79	524.75	524.75	524.75	407.39
FINAL HT (M)	407.39	407.39	245.80	245.80	162.89	162.89	162.89	162.89	162.89	162.89
FINAL HT (M)	162.89	162.89	458.78	458.78	458.78	458.78	430.08	430.08	430.08	430.08
DIST FIN HT (KM)	1.460	1.272	1.272	0.894	0.894	0.894	1.299	1.299	1.299	1.090
DIST FIN HT (KM)	1.090	1.090	0.769	0.769	0.581	0.581	0.581	0.581	0.581	0.581
DIST FIN HT (KM)	0.581	0.581	1.154	1.154	1.154	1.154	1.125	1.125	1.125	1.125

RANK	1	2	3	4	5	6	7	8	9	10	TOTAL SIGNIF POINT	TOTAL ALL POINT SOURCES
SOURCE #	8	27	1	13	14	3	2	4	5	6		
RECEP #												
1	0.0	0.112	0.0	0.0	0.0	0.000	0.000	0.0	0.0	0.0	0.112	0.206
2	0.0	0.077	0.0	0.0	0.0	0.000	0.000	0.0	0.0	0.0	0.077	0.145
3	0.0	0.079	0.0	0.000	0.000	0.000	0.000	0.0	0.0	0.0	0.079	0.154
4	0.0	0.112	0.0	0.000	0.000	0.000	0.000	0.0	0.0	0.0	0.112	0.231
5	0.000	0.200	0.0	0.000	0.000	0.000	0.000	0.0	0.0	0.0	0.200	0.459
6	0.000	0.407	0.0	0.012	0.004	0.000	0.000	0.0	0.0	0.0	0.424	1.251
7	0.037	0.871	0.0	0.370	0.155	0.000	0.000	0.0	0.0	0.0	1.433	4.550
8	0.507	1.834	0.0	3.723	1.878	0.000	0.001	0.0	0.0	0.0	7.944	18.572
9	1.461	3.621	0.000	16.572	10.157	0.005	0.006	0.000	0.000	0.0	31.822	62.174
10	1.710	6.475	0.000	38.957	29.188	0.048	0.046	0.000	0.000	0.000	76.425	137.333
11	1.003	10.245	0.000	53.407	49.330	0.300	0.266	0.000	0.000	0.000	114.551	219.854
12	0.307	14.115	0.000	44.624	51.590	1.342	1.143	0.011	0.001	0.000	113.132	254.268
13	0.046	16.766	0.000	22.769	33.810	4.447	3.707	0.433	0.065	0.005	82.049	184.903
14	0.003	17.065	0.000	6.844	13.597	11.171	9.276	4.183	1.299	0.257	63.694	131.816
15	0.000	14.845	0.003	1.121	3.173	21.765	18.266	12.581	6.651	2.629	81.035	136.800
16	0.000	11.040	0.022	0.088	0.389	33.562	28.863	12.881	10.174	7.513	104.532	155.093
17	0.000	7.046	0.087	0.003	0.021	41.749	37.292	4.160	5.170	5.944	101.473	150.877
18	0.000	3.890	0.214	0.000	0.000	42.688	40.162	0.375	0.583	0.869	88.782	135.279
19	0.0	1.884	0.358	0.000	0.000	36.606	36.808	0.004	0.005	0.006	75.671	112.027
20	0.0	0.818	0.418	0.000	0.000	26.946	29.400	0.000	0.000	0.000	57.582	79.213
21	0.0	0.330	0.312	0.000	0.000	17.522	21.060	0.000	0.000	0.0	39.223	50.126
22	0.0	0.130	0.125	0.0	0.000	10.445	14.007	0.0	0.0	0.0	24.706	29.689
23	0.0	0.053	0.018	0.0	0.0	5.981	9.011	0.0	0.0	0.0	15.063	16.844

24	0.0	0.025	0.000	0.0	0.0	3.478	5.856	0.0	0.0	0.0	9.359	9.854
25	0.0	0.015	0.000	0.0	0.0	2.306	3.981	0.0	0.0	0.0	6.302	6.420
26	0.0	0.013	0.000	0.0	0.0	2.121	3.369	0.0	0.0	0.0	5.503	5.561
27	0.0	0.019	0.0	0.0	0.0	2.048	3.152	0.0	0.0	0.0	5.219	5.298
28	0.0	0.043	0.0	0.0	0.0	1.564	2.229	0.0	0.0	0.0	3.836	4.014
29	0.0	0.146	0.0	0.0	0.0	0.511	0.713	0.0	0.0	0.0	1.369	1.953
30	0.0	0.573	0.0	0.0	0.0	0.028	0.052	0.0	0.0	0.0	0.653	2.911
31	0.0	1.885	0.0	0.0	0.0	0.000	0.001	0.0	0.0	0.0	1.885	8.680
32	0.0	3.711	0.0	0.0	0.0	0.000	0.000	0.0	0.0	0.0	3.711	14.071
33	0.0	3.426	0.0	0.0	0.0	0.000	0.000	0.0	0.0	0.0	3.426	10.296
34	0.0	1.742	0.0	0.0	0.0	0.000	0.000	0.0	0.0	0.0	1.742	4.104
35	0.0	0.646	0.0	0.0	0.0	0.000	0.000	0.0	0.0	0.0	0.646	1.306
36	0.0	0.237	0.0	0.0	0.0	0.000	0.000	0.0	0.0	0.0	0.237	0.448
37	0.0	0.003	0.0	0.0	0.0	0.0	0.0	0.0	0.0	0.0	0.003	0.003
38	0.0	0.028	0.0	0.0	0.0	0.0	0.0	0.0	0.0	0.0	0.028	0.035
39	0.0	0.363	0.0	0.0	0.0	0.0	0.0	0.0	0.0	0.0	0.363	0.819
40	0.0	0.493	0.0	0.0	0.0	0.0	0.0	0.0	0.0	0.0	0.493	0.860
41	0.0	2.133	0.0	0.0	0.0	0.0	0.000	0.0	0.0	0.0	2.133	7.010
42	0.0	1.892	0.0	0.0	0.0	0.000	0.000	0.0	0.0	0.0	1.892	4.668
43	0.0	0.000	0.0	0.0	0.0	0.000	0.000	0.0	0.0	0.0	0.001	0.002
44	0.0	0.140	0.0	0.0	0.0	0.002	0.007	0.0	0.0	0.0	0.149	0.755
45	0.0	0.000	0.0	0.0	0.0	0.009	0.062	0.0	0.0	0.0	0.071	0.072
46	0.0	0.096	0.0	0.0	0.0	0.040	0.086	0.0	0.0	0.0	0.222	0.645
47	0.0	0.018	0.0	0.0	0.0	0.831	1.388	0.0	0.0	0.0	2.236	2.310
48	0.0	1.061	0.0	0.0	0.0	1.001	1.094	0.0	0.0	0.0	3.156	7.206
49	0.0	17.016	0.000	0.000	0.031	0.768	0.748	0.0	0.0	0.0	18.563	69.014
50	0.0	11.157	0.0	5.603	13.850	0.007	0.009	0.0	0.0	0.0	30.626	60.207
51	0.000	0.020	0.0	0.000	0.000	0.000	0.000	0.0	0.0	0.0	0.020	0.040
52	0.000	0.222	0.0	0.003	0.001	0.000	0.000	0.0	0.0	0.0	0.226	0.619
53	0.000	0.069	0.0	0.000	0.000	0.000	0.000	0.0	0.0	0.0	0.070	0.172
54	0.000	0.021	0.0	0.000	0.000	0.000	0.000	0.0	0.0	0.0	0.021	0.049
55	0.013	0.159	0.0	0.020	0.009	0.000	0.000	0.0	0.0	0.0	0.202	0.682
56	1.461	3.621	0.000	16.572	10.157	0.005	0.006	0.000	0.000	0.0	31.822	62.174
57	0.567	0.696	0.000	0.898	0.463	0.000	0.000	0.000	0.000	0.0	2.625	8.042
58	0.000	16.922	0.000	14.562	28.492	0.921	0.819	0.000	0.000	0.000	61.715	124.511
59	0.114	12.297	0.000	47.451	51.960	0.309	0.279	0.000	0.000	0.000	112.409	203.749
60	1.796	7.537	0.000	45.392	36.174	0.099	0.090	0.000	0.000	0.000	91.088	166.682
61	3.787	4.083	0.000	22.168	14.839	0.031	0.029	0.000	0.000	0.000	44.936	97.513
62	0.0	0.102	0.000	0.0	0.0	7.311	10.486	0.0	0.0	0.0	17.899	20.026
63	0.0	0.993	0.000	0.0	0.000	18.204	20.486	0.0	0.0	0.0	39.683	48.292
64	0.0	4.311	0.000	0.000	0.000	22.897	22.303	0.000	0.000	0.000	49.511	68.414
65	0.0	10.385	0.000	0.000	0.003	18.184	16.326	1.028	0.390	0.025	46.341	83.409
66	0.000	16.165	0.000	0.133	0.819	10.602	9.133	1.330	0.170	0.004	38.357	91.490
67	0.000	18.165	0.000	5.620	13.445	5.030	4.265	0.229	0.017	0.000	46.773	110.406
68	1.177	11.714	0.000	52.661	52.041	0.793	0.679	0.004	0.000	0.000	119.069	268.328
69	7.766	4.303	0.000	22.876	16.351	0.101	0.089	0.000	0.000	0.000	51.486	123.525
70	0.0	0.000	0.007	0.0	0.0	0.019	0.076	0.0	0.0	0.0	0.102	0.102
71	0.000	12.205	0.002	0.040	0.244	25.381	21.890	7.625	5.448	2.511	75.345	121.300
72	0.025	17.015	0.000	14.961	24.340	7.731	6.401	2.113	0.540	0.086	73.213	160.329
73	0.0	0.000	0.000	0.0	0.0	0.000	0.000	0.0	0.0	0.0	0.000	0.000
74	0.0	0.000	0.035	0.0	0.0	0.010	0.039	0.0	0.0	0.0	0.084	0.084
75	0.0	0.001	0.735	0.0	0.0	0.358	0.820	0.0	0.0	0.0	1.913	1.924
76	0.0	0.020	1.567	0.0	0.0	3.653	5.769	0.0	0.0	0.0	11.009	11.961
77	0.0	0.219	1.195	0.000	0.000	14.985	18.476	0.000	0.000	0.000	34.875	44.543

78	0.0	1.205	0.559	0.000	0.000	32.005	33.500	0.000	0.000	0.000	67.269	98.141
79	0.000	3.890	0.214	0.000	0.000	42.688	40.162	0.375	0.583	0.869	88.782	135.279
80	0.000	8.324	0.076	0.013	0.076	40.471	35.593	7.954	7.879	8.089	108.475	159.930
81	0.000	12.929	0.024	0.619	1.818	29.938	25.287	20.260	14.715	8.531	114.120	169.901
82	0.012	15.628	0.007	6.222	11.425	18.494	15.284	15.463	8.482	3.626	94.643	164.222
83	0.374	15.511	0.002	21.953	29.381	10.027	8.213	6.214	2.701	0.908	95.284	216.852
84	3.118	13.178	0.001	38.143	41.128	4.951	4.055	1.787	0.646	0.181	107.189	298.798
85	10.306	9.904	0.000	40.784	37.881	2.288	1.885	0.437	0.137	0.033	103.655	285.118
86	9.857	10.365	0.000	40.118	38.089	2.862	2.350	0.721	0.251	0.070	104.684	289.933

APPLICATION FOR 30 SOURCES AND 50 RECEPTORS
POLLUTANT TSP IS BEING MODELED USING 3 HOURS OF MET DATA
DATA FROM 1980 MPTER GUIDE --- EXAMPLE 4 SEPTEMBER 3,1981

PART SURFACE DEPOSITION FLUX (KG/KM**2/HOUR) FROM SIGNIFICANT POINT SOURCES 79/ 292 : HOUR 13

RANK	1	2	3	4	5	6	7	8	9	10	TOTAL SIGNIF POINT	TOTAL ALL POINT SOURCES
SOURCE #	8	27	1	13	14	3	2	4	5	6		
GRD LVL RECEP.												
1	0.0	0.008	0.0	0.0	0.0	0.000	0.000	0.0	0.0	0.0	0.008	0.015
2	0.0	0.006	0.0	0.0	0.0	0.000	0.000	0.0	0.0	0.0	0.006	0.010
3	0.0	0.006	0.0	0.000	0.000	0.000	0.000	0.0	0.0	0.0	0.006	0.011
4	0.0	0.008	0.0	0.000	0.000	0.000	0.000	0.0	0.0	0.0	0.008	0.017
5	0.000	0.014	0.0	0.000	0.000	0.000	0.000	0.0	0.0	0.0	0.014	0.033
6	0.000	0.029	0.0	0.001	0.000	0.000	0.000	0.0	0.0	0.0	0.031	0.090
7	0.003	0.063	0.0	0.027	0.011	0.000	0.000	0.0	0.0	0.0	0.103	0.328
8	0.037	0.132	0.0	0.268	0.135	0.000	0.000	0.0	0.0	0.0	0.572	1.337
9	0.105	0.261	0.000	1.193	0.731	0.000	0.000	0.000	0.000	0.0	2.291	4.477
10	0.123	0.466	0.000	2.805	2.102	0.003	0.003	0.000	0.000	0.000	5.503	9.888
11	0.072	0.738	0.000	3.845	3.552	0.022	0.019	0.000	0.000	0.000	8.248	15.829
12	0.022	1.016	0.000	3.213	3.714	0.097	0.082	0.001	0.000	0.000	8.145	18.307
13	0.003	1.207	0.000	1.639	2.434	0.320	0.267	0.031	0.005	0.000	5.907	13.313
14	0.000	1.229	0.000	0.493	0.979	0.804	0.668	0.301	0.094	0.019	4.586	9.491
15	0.000	1.069	0.000	0.081	0.228	1.567	1.315	0.906	0.479	0.189	5.835	9.850
16	0.000	0.795	0.002	0.006	0.028	2.416	2.078	0.927	0.733	0.541	7.526	11.167
17	0.000	0.507	0.006	0.000	0.002	3.006	2.685	0.300	0.372	0.428	7.306	10.863
18	0.000	0.280	0.015	0.000	0.000	3.074	2.892	0.027	0.042	0.063	6.392	9.740
19	0.0	0.136	0.026	0.000	0.000	2.636	2.650	0.000	0.000	0.000	5.448	8.066
20	0.0	0.059	0.030	0.000	0.000	1.940	2.117	0.000	0.000	0.000	4.146	5.703
21	0.0	0.024	0.022	0.000	0.000	1.262	1.516	0.000	0.000	0.0	2.824	3.609
22	0.0	0.009	0.009	0.0	0.000	0.752	1.008	0.0	0.0	0.0	1.779	2.138
23	0.0	0.004	0.001	0.0	0.0	0.431	0.649	0.0	0.0	0.0	1.085	1.213
24	0.0	0.002	0.000	0.0	0.0	0.250	0.422	0.0	0.0	0.0	0.674	0.709
25	0.0	0.001	0.000	0.0	0.0	0.166	0.287	0.0	0.0	0.0	0.454	0.462
26	0.0	0.001	0.000	0.0	0.0	0.153	0.243	0.0	0.0	0.0	0.396	0.400
27	0.0	0.001	0.0	0.0	0.0	0.147	0.227	0.0	0.0	0.0	0.376	0.381
28	0.0	0.003	0.0	0.0	0.0	0.113	0.160	0.0	0.0	0.0	0.276	0.209
29	0.0	0.010	0.0	0.0	0.0	0.037	0.051	0.0	0.0	0.0	0.099	0.141
30	0.0	0.041	0.0	0.0	0.0	0.002	0.004	0.0	0.0	0.0	0.047	0.210
31	0.0	0.136	0.0	0.0	0.0	0.000	0.000	0.0	0.0	0.0	0.136	0.625
32	0.0	0.267	0.0	0.0	0.0	0.000	0.000	0.0	0.0	0.0	0.267	1.013
33	0.0	0.247	0.0	0.0	0.0	0.000	0.000	0.0	0.0	0.0	0.247	0.741
34	0.0	0.125	0.0	0.0	0.0	0.000	0.000	0.0	0.0	0.0	0.125	0.295
35	0.0	0.046	0.0	0.0	0.0	0.000	0.000	0.0	0.0	0.0	0.046	0.094

36	0.0	0.017	0.0	0.0	0.0	0.000	0.000	0.0	0.0	0.0	0.017	0.032
37	0.0	0.000	0.0	0.0	0.0	0.0	0.0	0.0	0.0	0.0	0.000	0.000
38	0.0	0.002	0.0	0.0	0.0	0.0	0.0	0.0	0.0	0.0	0.002	0.003
39	0.0	0.026	0.0	0.0	0.0	0.0	0.0	0.0	0.0	0.0	0.026	0.059
40	0.0	0.036	0.0	0.0	0.0	0.0	0.0	0.0	0.0	0.0	0.036	0.062
41	0.0	0.154	0.0	0.0	0.0	0.0	0.000	0.0	0.0	0.0	0.154	0.505
42	0.0	0.136	0.0	0.0	0.0	0.000	0.000	0.0	0.0	0.0	0.136	0.336
43	0.0	0.000	0.0	0.0	0.0	0.000	0.000	0.0	0.0	0.0	0.000	0.000
44	0.0	0.010	0.0	0.0	0.0	0.000	0.001	0.0	0.0	0.0	0.011	0.054
45	0.0	0.000	0.0	0.0	0.0	0.001	0.004	0.0	0.0	0.0	0.005	0.005
46	0.0	0.007	0.0	0.0	0.0	0.003	0.006	0.0	0.0	0.0	0.016	0.046
47	0.0	0.001	0.0	0.0	0.0	0.060	0.100	0.0	0.0	0.0	0.161	0.166
48	0.0	0.076	0.0	0.0	0.0	0.072	0.079	0.0	0.0	0.0	0.227	0.519
49	0.0	1.225	0.000	0.000	0.002	0.055	0.054	0.0	0.0	0.0	1.337	4.969
50	0.0	0.803	0.0	0.403	0.997	0.001	0.001	0.0	0.0	0.0	2.205	4.335
51	0.000	0.001	0.0	0.000	0.000	0.000	0.000	0.0	0.0	0.0	0.001	0.003
52	0.000	0.016	0.0	0.000	0.000	0.000	0.000	0.0	0.0	0.0	0.016	0.045
53	0.000	0.005	0.0	0.000	0.000	0.000	0.000	0.0	0.0	0.0	0.005	0.012
54	0.000	0.002	0.0	0.000	0.000	0.000	0.000	0.0	0.0	0.0	0.002	0.004
55	0.001	0.011	0.0	0.001	0.001	0.000	0.000	0.0	0.0	0.0	0.015	0.049
56	0.105	0.261	0.000	1.193	0.731	0.000	0.000	0.000	0.000	0.0	2.291	4.477
57	0.041	0.050	0.000	0.065	0.033	0.000	0.000	0.000	0.000	0.0	0.189	0.579
58	0.000	1.218	0.000	1.048	2.051	0.066	0.059	0.000	0.000	0.000	4.444	8.965
59	0.008	0.885	0.000	3.416	3.741	0.022	0.020	0.000	0.000	0.000	8.093	14.670
60	0.129	0.543	0.000	3.268	2.605	0.007	0.007	0.000	0.000	0.000	6.558	12.001
61	0.273	0.294	0.000	1.596	1.068	0.002	0.002	0.000	0.000	0.000	3.235	7.021
62	0.0	0.007	0.000	0.0	0.0	0.526	0.755	0.0	0.0	0.0	1.289	1.442
63	0.0	0.071	0.000	0.0	0.000	1.311	1.475	0.0	0.0	0.0	2.857	3.477
64	0.0	0.310	0.000	0.000	0.000	1.649	1.606	0.000	0.000	0.000	3.565	4.926
65	0.0	0.748	0.000	0.000	0.000	1.309	1.175	0.074	0.028	0.002	3.337	6.005
66	0.000	1.164	0.000	0.010	0.059	0.763	0.658	0.096	0.012	0.000	2.762	6.587
67	0.000	1.308	0.000	0.405	0.968	0.362	0.307	0.017	0.001	0.000	3.368	7.949
68	0.085	0.843	0.000	3.792	3.747	0.057	0.049	0.000	0.000	0.000	8.573	19.320
69	0.559	0.310	0.000	1.647	1.177	0.007	0.006	0.000	0.000	0.000	3.707	8.894
70	0.0	0.000	0.001	0.0	0.0	0.001	0.005	0.0	0.0	0.0	0.007	0.007
71	0.000	0.879	0.000	0.003	0.018	1.827	1.576	0.549	0.392	0.181	5.425	8.734
72	0.002	1.225	0.000	1.077	1.753	0.557	0.461	0.152	0.039	0.006	5.271	11.544
73	0.0	0.000	0.000	0.0	0.0	0.000	0.000	0.0	0.0	0.0	0.000	0.000
74	0.0	0.000	0.003	0.0	0.0	0.001	0.003	0.0	0.0	0.0	0.006	0.006
75	0.0	0.000	0.053	0.0	0.0	0.026	0.059	0.0	0.0	0.0	0.138	0.139
76	0.0	0.001	0.113	0.0	0.0	0.263	0.415	0.0	0.0	0.0	0.793	0.861
77	0.0	0.016	0.086	0.000	0.000	1.079	1.330	0.000	0.000	0.000	2.511	3.207
78	0.0	0.087	0.040	0.000	0.000	2.304	2.412	0.000	0.000	0.000	4.843	7.066
79	0.000	0.280	0.015	0.000	0.000	3.074	2.892	0.027	0.042	0.063	6.392	9.740
80	0.000	0.599	0.005	0.001	0.005	2.914	2.563	0.573	0.567	0.582	7.810	11.515
81	0.000	0.931	0.002	0.045	0.131	2.156	1.821	1.459	1.059	0.614	8.217	12.233
82	0.001	1.125	0.001	0.448	0.823	1.332	1.100	1.113	0.611	0.261	6.814	11.824
83	0.027	1.117	0.000	1.581	2.115	0.722	0.591	0.447	0.194	0.065	6.860	15.613
84	0.225	0.949	0.000	2.746	2.961	0.356	0.292	0.129	0.046	0.013	7.718	20.793
85	0.742	0.711	0.000	2.936	2.727	0.165	0.136	0.031	0.010	0.002	7.463	20.528
86	0.710	0.746	0.000	2.889	2.742	0.206	0.169	0.052	0.018	0.005	7.537	20.875

APPLICATION FOR 30 SOURCES AND 50 RECEPTORS
POLLUTANT TSP IS BEING MODELED USING 3 HOURS OF MET DATA
DATA FROM 1980 MPTER GUIDE --- EXAMPLE 4 SEPTEMBER 3,1981

PART SUMMARY CONCENTRATION TABLE (MICROGRAMS/M**3) 79/ 292 : HOUR 13

RECEPTOR NO.	NAME	EAST COORD	NORTH COORD	RECEPTOR HT ABV GRD (M)	RECEPTOR GRD-LVL ELEV (USER HT UNITS)	TOTAL FROM SIGNIF POINT SOURCES	TOTAL FROM ALL SOURCES	CONCENTRATION RANK
1	10, 1.0	2.17	1.98	0.0	0.0	0.1120	0.2065	74
2	20, 1.0	2.34	1.94	0.0	0.0	0.0774	0.1445	77
3	30, 1.0	2.50	1.87	0.0	0.0	0.0791	0.1537	76
4	40, 1.0	2.64	1.77	0.0	0.0	0.1121	0.2313	73
5	50, 1.0	2.77	1.64	0.0	0.0	0.1999	0.4591	71
6	60, 1.0	2.87	1.50	0.0	0.0	0.4238	1.2510	64
7	70, 1.0	2.94	1.34	0.0	0.0	1.4334	4.5501	56
8	80, 1.0	2.98	1.17	0.0	0.0	7.9436	18.5724	42
9	90, 1.0	3.00	1.00	0.0	0.0	31.8218	62.1737	34
10	100, 1.0	2.98	0.83	0.0	0.0	76.4252	137.3330	17
11	110, 1.0	2.94	0.66	0.0	0.0	114.5506	219.8538	6
12	120, 1.0	2.87	0.50	0.0	0.0	113.1317	254.2683	5
13	130, 1.0	2.77	0.36	0.0	0.0	82.0486	184.9031	9
14	140, 1.0	2.64	0.23	0.0	0.0	63.6944	131.8163	21
15	150, 1.0	2.50	0.13	0.0	0.0	81.0348	136.8003	18
16	160, 1.0	2.34	0.06	0.0	0.0	104.5322	155.0932	15
17	170, 1.0	2.17	0.02	0.0	0.0	101.4726	150.8766	16
18	180, 1.0	2.00	0.0	0.0	0.0	88.7817	135.2788	19
19	190, 1.0	1.83	0.02	0.0	0.0	75.6711	112.0274	25
20	200, 1.0	1.66	0.06	0.0	0.0	57.5821	79.2128	31
21	210, 1.0	1.50	0.13	0.0	0.0	39.2234	50.1261	37
22	220, 1.0	1.36	0.23	0.0	0.0	24.7065	29.6891	40
23	230, 1.0	1.23	0.36	0.0	0.0	15.0626	16.8436	43
24	240, 1.0	1.13	0.50	0.0	0.0	9.3594	9.8540	47
25	250, 1.0	1.06	0.66	0.0	0.0	6.3024	6.4201	52
26	260, 1.0	1.02	0.83	0.0	0.0	5.5032	5.5615	53
27	270, 1.0	1.00	1.00	0.0	0.0	5.2185	5.2976	54
28	280, 1.0	1.02	1.17	0.0	0.0	3.8357	4.0142	58
29	290, 1.0	1.06	1.34	0.0	0.0	1.3693	1.9535	61
30	300, 1.0	1.13	1.50	0.0	0.0	0.6533	2.9106	59
31	310, 1.0	1.23	1.64	0.0	0.0	1.8854	8.6799	48
32	320, 1.0	1.36	1.77	0.0	0.0	3.7108	14.0706	44
33	330, 1.0	1.50	1.87	0.0	0.0	3.4256	10.2961	46
34	340, 1.0	1.66	1.94	0.0	0.0	1.7422	4.1040	57
35	350, 1.0	1.83	1.98	0.0	0.0	0.6457	1.3064	63
36	360, 1.0	2.00	2.00	0.0	0.0	0.2373	0.4476	72
37	1	1.00	2.50	0.0	0.0	0.0029	0.0030	84

38	2	1.25	2.40	0.0	0.0	0.0284	0.0350	83
39	3	1.00	2.25	0.0	0.0	0.3630	0.8191	66
40	4	1.25	2.25	0.0	0.0	0.4931	0.8601	65
41	5	1.20	2.00	0.0	0.0	2.1333	7.0097	51
42	6	1.50	2.00	0.0	0.0	1.8922	4.6675	55
43	7	0.75	1.70	0.0	0.0	0.0006	0.0022	85
44	8	1.00	1.60	0.0	0.0	0.1486	0.7553	67
45	9	0.75	1.50	0.0	0.0	0.0709	0.0721	80
46	10	1.00	1.50	0.0	0.0	0.2218	0.6451	69
47	11	0.95	1.25	0.0	0.0	2.2359	2.3096	60
48	12	1.25	1.25	0.0	0.0	3.1560	7.2057	50
49	13	2.00	1.00	0.0	0.0	18.5634	69.0142	32
50	14	2.25	1.25	0.0	0.0	30.6262	60.2068	36
51	15	3.00	1.75	0.0	0.0	0.0200	0.0398	82
52	16	3.00	1.50	0.0	0.0	0.2262	0.6195	70
53	17	3.25	1.50	0.0	0.0	0.0698	0.1721	75
54	18	3.50	1.50	0.0	0.0	0.0214	0.0494	81
55	19	3.50	1.25	0.0	0.0	0.2021	0.6816	68
56	20	3.00	1.00	0.0	0.0	31.8218	62.1737	35
57	21	3.50	1.00	0.0	0.0	2.6245	8.0423	49
58	22	2.50	0.75	0.0	0.0	61.7155	124.5110	22
59	23	2.75	0.75	0.0	0.0	112.4092	203.7494	9
60	24	3.00	0.75	0.0	0.0	91.0880	166.6819	11
61	25	3.25	0.75	0.0	0.0	44.9365	97.5128	28
62	26	1.25	0.50	0.0	0.0	17.8994	20.0263	41
63	27	1.50	0.50	0.0	0.0	39.6825	48.2923	38
64	28	1.75	0.50	0.0	0.0	49.5112	68.4141	33
65	29	2.00	0.50	0.0	0.0	46.3407	83.4090	30
66	30	2.25	0.50	0.0	0.0	38.3567	91.4903	29
67	31	2.50	0.50	0.0	0.0	46.7728	110.4058	26
68	32	3.00	0.50	0.0	0.0	119.0688	268.3280	4
69	33	3.50	0.50	0.0	0.0	51.4858	123.5249	23
70	34	0.75	0.25	0.0	0.0	0.1016	0.1017	78
71	35	2.25	0.25	0.0	0.0	75.3450	121.3002	24
72	36	2.75	0.25	0.0	0.0	73.2132	160.3288	13
73	37	0.50	0.0	0.0	0.0	0.0004	0.0004	86
74	38	0.75	0.0	0.0	0.0	0.0837	0.0837	79
75	39	1.00	0.0	0.0	0.0	1.9133	1.9238	62
76	40	1.25	0.0	0.0	0.0	11.0086	11.9612	45
77	41	1.50	0.0	0.0	0.0	34.8745	44.5428	39
78	42	1.75	0.0	0.0	0.0	67.2694	98.1405	27
79	43	2.00	0.0	0.0	0.0	88.7817	135.2788	20
80	44	2.25	0.0	0.0	0.0	108.4746	159.9297	14
81	45	2.50	0.0	0.0	0.0	114.1204	169.9012	10
82	46	2.75	0.0	0.0	0.0	94.6431	164.2216	12
83	47	3.00	0.0	0.0	0.0	95.2841	216.8518	7
84	48	3.25	0.0	0.0	0.0	107.1887	288.7975	2
85	49	3.50	0.0	0.0	0.0	103.6550	285.1179	3
86	50	3.50	-0.05	0.0	0.0	104.6840	289.9328	1

APPLICATION FOR 30 SOURCES AND 50 RECEPTORS
POLLUTANT TSP IS BEING MODELED USING 3 HOURS OF MET DATA
DATA FROM 1980 MPTER GUIDE --- EXAMPLE 4 SEPTEMBER 3,1981

PART SUMMARY TABLE OF DEPOSITION FLUX (KG/KM**2/HOUR) 79/ 292 : HOUR 13
(GROUND LEVEL RECEPTORS ONLY)

RECEPTOR NO.	NAME	EAST COORD	NORTH COORD	RECEPTOR HT ABV GRD (M)	RECEPTOR GRD-LVL ELEV (USER HT UNITS)	TOTAL FROM SIGNIF POINT SOURCES	TOTAL FROM ALL SOURCES	CONCENTRATION RANK
1	10, 1.0	2.17	1.98	0.0	0.0	0.0081	0.0149	74
2	20, 1.0	2.34	1.94	0.0	0.0	0.0056	0.0104	77
3	30, 1.0	2.50	1.87	0.0	0.0	0.0057	0.0111	76
4	40, 1.0	2.64	1.77	0.0	0.0	0.0081	0.0167	73
5	50, 1.0	2.77	1.64	0.0	0.0	0.0144	0.0331	71
6	60, 1.0	2.87	1.50	0.0	0.0	0.0305	0.0901	64
7	70, 1.0	2.94	1.34	0.0	0.0	0.1032	0.3276	56
8	80, 1.0	2.98	1.17	0.0	0.0	0.5719	1.3372	42
9	90, 1.0	3.00	1.00	0.0	0.0	2.2912	4.4765	34
10	100, 1.0	2.98	0.83	0.0	0.0	5.5026	9.8080	17
11	110, 1.0	2.94	0.66	0.0	0.0	8.2476	15.8295	6
12	120, 1.0	2.87	0.50	0.0	0.0	8.1455	18.3073	5
13	130, 1.0	2.77	0.36	0.0	0.0	5.9075	13.3130	9
14	140, 1.0	2.64	0.23	0.0	0.0	4.5860	9.4908	21
15	150, 1.0	2.50	0.13	0.0	0.0	5.8345	9.8496	18
16	160, 1.0	2.34	0.06	0.0	0.0	7.5263	11.1667	15
17	170, 1.0	2.17	0.02	0.0	0.0	7.3060	10.8631	16
18	180, 1.0	2.00	0.0	0.0	0.0	6.3923	9.7401	19
19	190, 1.0	1.83	0.02	0.0	0.0	5.4483	8.0660	25
20	200, 1.0	1.66	0.06	0.0	0.0	4.1459	5.7033	31
21	210, 1.0	1.50	0.13	0.0	0.0	2.8241	3.6091	37
22	220, 1.0	1.36	0.23	0.0	0.0	1.7789	2.1376	40
23	230, 1.0	1.23	0.36	0.0	0.0	1.0845	1.2127	43
24	240, 1.0	1.13	0.50	0.0	0.0	0.6739	0.7095	47
25	250, 1.0	1.06	0.66	0.0	0.0	0.4538	0.4622	52
26	260, 1.0	1.02	0.83	0.0	0.0	0.3962	0.4004	53
27	270, 1.0	1.00	1.00	0.0	0.0	0.3757	0.3814	54
28	280, 1.0	1.02	1.17	0.0	0.0	0.2762	0.2890	58
29	290, 1.0	1.06	1.34	0.0	0.0	0.0986	0.1407	61
30	300, 1.0	1.13	1.50	0.0	0.0	0.0470	0.2096	59
31	310, 1.0	1.23	1.64	0.0	0.0	0.1358	0.6250	48
32	320, 1.0	1.36	1.77	0.0	0.0	0.2672	1.0131	44
33	330, 1.0	1.50	1.87	0.0	0.0	0.2466	0.7413	46
34	340, 1.0	1.66	1.94	0.0	0.0	0.1254	0.2955	57
35	350, 1.0	1.83	1.98	0.0	0.0	0.0465	0.0941	63
36	360, 1.0	2.00	2.00	0.0	0.0	0.0171	0.0322	72

37	1	1.00	2.50	0.0	0.0	0.0002	0.0002	84
38	2	1.25	2.40	0.0	0.0	0.0020	0.0025	83
39	3	1.00	2.25	0.0	0.0	0.0261	0.0590	66
40	4	1.25	2.25	0.0	0.0	0.0355	0.0619	65
41	5	1.20	2.00	0.0	0.0	0.1536	0.5047	51
42	6	1.50	2.00	0.0	0.0	0.1362	0.3361	55
43	7	0.75	1.70	0.0	0.0	0.0000	0.0002	85
44	8	1.00	1.60	0.0	0.0	0.0107	0.0544	67
45	9	0.75	1.50	0.0	0.0	0.0051	0.0052	80
46	10	1.00	1.50	0.0	0.0	0.0160	0.0464	69
47	11	0.95	1.25	0.0	0.0	0.1610	0.1663	60
48	12	1.25	1.25	0.0	0.0	0.2272	0.5108	50
49	13	2.00	1.00	0.0	0.0	1.3366	4.9690	32
50	14	2.25	1.25	0.0	0.0	2.2051	4.3349	36
51	15	3.00	1.75	0.0	0.0	0.0014	0.0029	82
52	16	3.00	1.50	0.0	0.0	0.0163	0.0446	70
53	17	3.25	1.50	0.0	0.0	0.0050	0.0124	75
54	18	3.50	1.50	0.0	0.0	0.0015	0.0036	81
55	19	3.50	1.25	0.0	0.0	0.0145	0.0491	68
56	20	3.00	1.00	0.0	0.0	2.2912	4.4765	35
57	21	3.50	1.00	0.0	0.0	0.1890	0.5790	49
58	22	2.50	0.75	0.0	0.0	4.4435	8.9648	22
59	23	2.75	0.75	0.0	0.0	8.0935	14.6700	8
60	24	3.00	0.75	0.0	0.0	6.5583	12.0011	11
61	25	3.25	0.75	0.0	0.0	3.2354	7.0209	28
62	26	1.25	0.50	0.0	0.0	1.2888	1.4419	41
63	27	1.50	0.50	0.0	0.0	2.8571	3.4770	39
64	28	1.75	0.50	0.0	0.0	3.5648	4.9258	33
65	29	2.00	0.50	0.0	0.0	3.3365	6.0055	30
66	30	2.25	0.50	0.0	0.0	2.7617	6.5873	29
67	31	2.50	0.50	0.0	0.0	3.3676	7.9492	26
68	32	3.00	0.50	0.0	0.0	8.5730	19.3196	4
69	33	3.50	0.50	0.0	0.0	3.7070	8.8938	23
70	34	0.75	0.25	0.0	0.0	0.0073	0.0073	78
71	35	2.25	0.25	0.0	0.0	5.4248	8.7336	24
72	36	2.75	0.25	0.0	0.0	5.2713	11.5437	13
73	37	0.50	0.0	0.0	0.0	0.0000	0.0000	86
74	38	0.75	0.0	0.0	0.0	0.0060	0.0060	79
75	39	1.00	0.0	0.0	0.0	0.1378	0.1385	62
76	40	1.25	0.0	0.0	0.0	0.7926	0.8612	45
77	41	1.50	0.0	0.0	0.0	2.5110	3.2071	39
78	42	1.75	0.0	0.0	0.0	4.8434	7.0661	27
79	43	2.00	0.0	0.0	0.0	6.3923	9.7401	20
80	44	2.25	0.0	0.0	0.0	7.8102	11.5149	14
81	45	2.50	0.0	0.0	0.0	8.2167	12.2329	10
82	46	2.75	0.0	0.0	0.0	6.8143	11.8240	12
83	47	3.00	0.0	0.0	0.0	6.8605	15.6133	7
84	48	3.25	0.0	0.0	0.0	7.7176	20.7934	2
85	49	3.50	0.0	0.0	0.0	7.4632	20.5284	3
86	50	3.50	-0.05	0.0	0.0	7.5372	20.8751	1

APPLICATION FOR 30 SOURCES AND 50 RECEPTORS
POLLUTANT TSP IS BEING MODELED USING 3 HOURS OF MET DATA
DATA FROM 1980 MPTER GUIDE --- EXAMPLE 4 SEPTEMBER 3,1981

PART CONCENTRATION(MICROGRAMS/M**3) FROM SIGNIFICANT POINT SOURCES 79/ 292 : HOUR 14

HOUR	THETA (DEG)	SPEED (M/S)	MIXING HEIGHT(M)	TEMP (K)	STABILITY CLASS
14	305.00	3.00	1900.00	299.00	2

	1	2	3	4	5	6	7	8	9	10
FINAL HT (M)	649.80	522.98	522.98	309.86	309.86	309.86	511.26	511.26	511.26	396.81
FINAL HT (M)	396.81	396.81	239.28	239.28	158.46	158.46	158.46	158.46	158.46	158.46
FINAL HT (M)	158.46	158.46	447.49	447.49	447.49	447.49	419.08	419.08	419.08	419.08
DIST FIN HT (KM)	1.460	1.272	1.272	0.894	0.894	0.894	1.299	1.299	1.299	1.090
DIST FIN HT (KM)	1.090	1.090	0.769	0.769	0.581	0.581	0.581	0.581	0.581	0.581
DIST FIN HT (KM)	0.581	0.581	1.154	1.154	1.154	1.154	1.125	1.125	1.125	1.125

RANK	1	2	3	4	5	6	7	8	9	10	TOTAL SIGNIF POINT	TOTAL ALL POINT SOURCES
SOURCE #	8	27	1	13	14	3	2	4	5	6		
RECEP #												
1	0.0	6.030	0.0	0.0	0.0	0.000	0.000	0.0	0.0	0.0	6.030	16.249
2	0.0	6.072	0.0	0.000	0.000	0.000	0.000	0.0	0.0	0.0	6.073	16.538
3	0.0	6.765	0.0	0.000	0.000	0.000	0.001	0.0	0.0	0.0	6.766	19.078
4	0.0	8.184	0.0	0.004	0.004	0.002	0.004	0.0	0.0	0.0	8.199	24.477
5	0.000	10.343	0.000	0.297	0.202	0.015	0.023	0.0	0.0	0.0	10.880	35.009
6	0.005	13.071	0.000	3.736	2.803	0.085	0.113	0.0	0.0	0.0	19.813	58.317
7	0.216	15.863	0.000	18.633	14.764	0.407	0.475	0.000	0.0	0.0	50.358	110.413
8	0.636	17.859	0.000	42.259	37.719	1.574	1.670	0.000	0.000	0.000	101.716	186.133
9	0.501	18.126	0.000	50.971	53.556	4.866	4.814	0.000	0.000	0.000	132.833	229.347
10	0.150	16.201	0.000	35.014	45.037	11.986	11.298	0.005	0.000	0.000	119.692	223.418
11	0.018	12.508	0.003	13.777	22.689	23.568	21.571	0.255	0.031	0.002	94.421	201.351
12	0.001	8.206	0.032	2.961	6.628	37.159	33.579	3.194	0.820	0.131	92.710	119.065
13	0.000	4.511	0.211	0.314	1.038	47.240	42.800	12.943	5.973	1.896	116.927	153.597
14	0.000	2.052	0.891	0.014	0.076	48.718	44.923	19.514	14.587	8.062	138.837	184.880
15	0.000	0.765	2.541	0.000	0.002	41.025	39.097	10.920	12.464	11.144	117.958	177.345
16	0.000	0.231	5.082	0.000	0.000	28.430	28.468	1.948	3.407	5.563	73.129	133.466
17	0.0	0.057	7.337	0.000	0.000	16.383	17.555	0.085	0.241	0.630	42.287	87.473
18	0.0	0.011	7.809	0.000	0.000	7.972	9.329	0.000	0.001	0.005	25.128	49.788
19	0.0	0.002	6.228	0.0	0.000	3.354	4.384	0.000	0.000	0.000	13.967	23.925
20	0.0	0.000	4.821	0.0	0.0	1.266	1.892	0.000	0.000	0.000	7.979	10.956
21	0.0	0.000	3.025	0.0	0.0	0.453	0.793	0.0	0.0	0.0	4.271	5.115
22	0.0	0.000	1.372	0.0	0.0	0.168	0.348	0.0	0.0	0.0	1.887	2.097
23	0.0	0.000	0.354	0.0	0.0	0.072	0.177	0.0	0.0	0.0	0.603	0.648
24	0.0	0.000	0.027	0.0	0.0	0.041	0.116	0.0	0.0	0.0	0.184	0.193

25	0.0	0.000	0.000	0.0	0.0	0.039	0.114	0.0	0.0	0.0	0.152	0.154
26	0.0	0.000	0.000	0.0	0.0	0.061	0.185	0.0	0.0	0.0	0.246	0.246
27	0.0	0.000	0.000	0.0	0.0	0.154	0.428	0.0	0.0	0.0	0.582	0.582
28	0.0	0.000	0.0	0.0	0.0	0.467	1.053	0.0	0.0	0.0	1.520	1.520
29	0.0	0.000	0.0	0.0	0.0	0.892	1.656	0.0	0.0	0.0	2.547	2.548
30	0.0	0.002	0.0	0.0	0.0	0.513	0.964	0.0	0.0	0.0	1.479	1.495
31	0.0	0.054	0.0	0.0	0.0	0.065	0.169	0.0	0.0	0.0	0.287	0.670
32	0.0	0.648	0.0	0.0	0.0	0.003	0.013	0.0	0.0	0.0	0.664	4.069
33	0.0	2.731	0.0	0.0	0.0	0.000	0.001	0.0	0.0	0.0	2.732	12.840
34	0.0	5.441	0.0	0.0	0.0	0.000	0.000	0.0	0.0	0.0	5.441	18.808
35	0.0	6.669	0.0	0.0	0.0	0.000	0.000	0.0	0.0	0.0	6.669	19.870
36	0.0	6.444	0.0	0.0	0.0	0.000	0.000	0.0	0.0	0.0	6.444	17.806
37	0.0	0.028	0.0	0.0	0.0	0.0	0.0	0.0	0.0	0.0	0.028	0.036
38	0.0	0.535	0.0	0.0	0.0	0.0	0.0	0.0	0.0	0.0	0.535	0.931
39	0.0	0.080	0.0	0.0	0.0	0.0	0.0	0.0	0.0	0.0	0.080	0.371
40	0.0	1.394	0.0	0.0	0.0	0.0	0.000	0.0	0.0	0.0	1.394	3.972
41	0.0	0.486	0.0	0.0	0.0	0.000	0.000	0.0	0.0	0.0	0.486	2.909
42	0.0	3.547	0.0	0.0	0.0	0.000	0.000	0.0	0.0	0.0	3.547	13.768
43	0.0	0.000	0.0	0.0	0.0	0.000	0.003	0.0	0.0	0.0	0.003	0.003
44	0.0	0.000	0.0	0.0	0.0	0.062	0.220	0.0	0.0	0.0	0.282	0.283
45	0.0	0.000	0.0	0.0	0.0	0.002	0.042	0.0	0.0	0.0	0.045	0.045
46	0.0	0.000	0.0	0.0	0.0	0.248	0.631	0.0	0.0	0.0	0.879	0.879
47	0.0	0.000	0.0	0.0	0.0	0.243	0.683	0.0	0.0	0.0	0.926	0.926
48	0.0	0.002	0.0	0.0	0.0	2.926	3.882	0.0	0.0	0.0	6.810	6.829
49	0.0	2.298	0.000	0.000	0.000	16.634	17.667	0.000	0.0	0.0	36.599	17.118
50	0.0	12.532	0.000	0.162	2.052	3.286	3.734	0.0	0.0	0.0	21.766	56.326
51	0.000	4.645	0.000	0.006	0.005	0.002	0.003	0.0	0.0	0.0	4.661	13.442
52	0.015	11.012	0.000	2.519	1.810	0.066	0.087	0.0	0.0	0.0	15.508	16.800
53	0.025	7.538	0.000	1.073	0.752	0.041	0.053	0.000	0.0	0.0	9.482	29.976
54	0.022	4.907	0.000	0.443	0.314	0.026	0.033	0.000	0.000	0.0	5.745	18.523
55	0.987	9.768	0.000	7.955	5.750	0.295	0.326	0.000	0.000	0.000	25.082	70.299
56	0.501	18.126	0.000	50.971	53.556	4.866	4.814	0.000	0.000	0.000	132.833	229.347
57	4.065	14.176	0.000	32.493	26.053	1.828	1.826	0.000	0.000	0.000	80.441	182.268
58	0.000	6.793	0.001	0.168	0.973	28.885	27.279	0.094	0.003	0.000	64.194	92.437
59	0.000	11.459	0.001	5.866	12.990	22.459	20.921	0.052	0.003	0.000	73.751	145.896
60	0.111	15.058	0.001	28.165	38.430	15.902	14.761	0.033	0.002	0.000	112.463	227.874
61	1.572	16.539	0.000	49.206	52.016	10.630	9.889	0.019	0.002	0.000	139.874	274.664
62	0.0	0.000	0.050	0.0	0.0	0.215	0.476	0.0	0.0	0.0	0.740	0.933
63	0.0	0.001	0.084	0.0	0.0	2.646	4.006	0.0	0.0	0.0	6.736	11.155
64	0.0	0.017	0.088	0.0	0.0	11.685	14.096	0.000	0.000	0.000	25.887	37.690
65	0.0	0.193	0.076	0.000	0.000	26.647	28.083	0.172	0.286	0.134	55.591	70.402
66	0.0	1.005	0.061	0.000	0.000	39.454	38.419	4.617	2.455	0.483	86.495	104.861
67	0.000	3.078	0.049	0.011	0.087	43.917	40.890	5.422	1.900	0.325	95.678	119.001
68	0.015	10.198	0.027	8.318	14.480	32.792	29.501	2.338	0.591	0.098	98.358	195.203
69	3.204	14.641	0.013	40.675	43.373	17.246	15.509	0.564	0.146	0.028	135.400	304.670
70	0.0	0.000	0.000	0.0	0.0	0.000	0.000	0.0	0.0	0.0	0.000	0.000
71	0.0	0.318	1.187	0.000	0.000	32.465	32.461	2.384	4.015	4.936	77.767	120.869
72	0.000	3.112	0.657	0.098	0.376	49.836	45.330	21.158	13.637	6.521	140.723	194.352
73	0.0	0.0	0.000	0.0	0.0	0.000	0.000	0.0	0.0	0.0	0.000	0.000
74	0.0	0.000	0.000	0.0	0.0	0.000	0.000	0.0	0.0	0.0	0.000	0.000
75	0.0	0.000	0.108	0.0	0.0	0.000	0.000	0.0	0.0	0.0	0.108	0.108
76	0.0	0.000	1.547	0.0	0.0	0.008	0.022	0.0	0.0	0.0	1.577	1.579
77	0.0	0.000	4.479	0.0	0.0	0.212	0.392	0.0	0.0	0.0	5.083	5.417

78	0.0	0.001	6.263	0.0	0.0	1.898	2.654	0.000	0.000	0.000	10.816	16.073
79	0.0	0.011	7.809	0.000	0.000	7.972	9.329	0.000	0.001	0.005	25.128	49.788
80	0.0	0.093	7.825	0.000	0.000	19.870	20.731	0.315	0.767	1.695	51.297	104.284
81	0.000	0.437	6.551	0.000	0.001	34.355	33.296	6.867	9.979	12.209	103.695	174.388
82	0.000	1.346	4.888	0.011	0.049	45.822	42.386	24.524	26.464	24.009	169.499	241.446
83	0.000	3.016	3.395	0.301	0.779	50.750	45.618	35.049	30.519	22.546	191.974	258.365
84	0.021	5.307	2.258	2.390	4.277	49.155	43.454	31.051	23.179	14.864	175.956	249.446
85	0.388	7.751	1.466	8.407	11.841	43.205	37.867	21.365	14.279	8.307	154.878	259.586
86	0.296	7.079	2.059	6.800	9.825	44.857	39.324	24.954	17.751	11.096	164.040	262.029

APPLICATION FOR 30 SOURCES AND 50 RECEPTORS
POLLUTANT TSP IS BEING MODELED USING 3 HOURS OF MET DATA
DATA FROM 1980 MPTER GUIDE --- EXAMPLE 4 SEPTEMBER 3,1981

PART SURFACE DEPOSITION FLUX (KG/KM**2/HOUR) FROM SIGNIFICANT POINT SOURCES 79/ 292 : HOUR 14

RANK	1	2	3	4	5	6	7	8	9	10	TOTAL SIGNIF POINT	TOTAL ALL POINT SOURCES
SOURCE #	8	27	1	13	14	3	2	4	5	6		
GRD LVL RECEP.												
1	0.0	0.434	0.0	0.0	0.0	0.000	0.000	0.0	0.0	0.0	0.434	1.170
2	0.0	0.437	0.0	0.000	0.000	0.000	0.000	0.0	0.0	0.0	0.437	1.191
3	0.0	0.487	0.0	0.000	0.000	0.000	0.000	0.0	0.0	0.0	0.487	1.374
4	0.0	0.589	0.0	0.000	0.000	0.000	0.000	0.0	0.0	0.0	0.599	1.762
5	0.000	0.745	0.000	0.021	0.015	0.001	0.002	0.0	0.0	0.0	0.783	2.521
6	0.000	0.941	0.000	0.269	0.202	0.006	0.008	0.0	0.0	0.0	1.427	4.199
7	0.016	1.142	0.000	1.342	1.063	0.029	0.034	0.000	0.0	0.0	3.626	7.950
8	0.046	1.286	0.000	3.043	2.716	0.113	0.120	0.000	0.000	0.000	7.324	13.402
9	0.036	1.305	0.000	3.670	3.856	0.350	0.347	0.000	0.000	0.000	9.564	16.513
10	0.011	1.166	0.000	2.521	3.243	0.863	0.813	0.000	0.000	0.000	8.618	16.086
11	0.001	0.901	0.000	0.992	1.634	1.697	1.553	0.018	0.002	0.000	6.798	14.497
12	0.000	0.591	0.002	0.213	0.477	2.675	2.418	0.230	0.059	0.009	6.675	10.733
13	0.000	0.325	0.015	0.023	0.075	3.401	3.082	0.932	0.430	0.137	8.419	11.059
14	0.000	0.148	0.064	0.001	0.005	3.508	3.234	1.405	1.050	0.580	9.996	13.311
15	0.000	0.055	0.183	0.000	0.000	2.954	2.815	0.786	0.897	0.802	8.493	12.769
16	0.000	0.017	0.366	0.000	0.000	2.047	2.050	0.140	0.245	0.401	5.265	9.610
17	0.0	0.004	0.528	0.000	0.000	1.180	1.264	0.006	0.017	0.045	3.045	5.298
18	0.0	0.001	0.562	0.000	0.000	0.574	0.672	0.000	0.000	0.000	1.809	3.585
19	0.0	0.000	0.448	0.0	0.000	0.241	0.316	0.000	0.000	0.000	1.006	1.715
20	0.0	0.000	0.347	0.0	0.0	0.091	0.136	0.000	0.000	0.000	0.575	0.789
21	0.0	0.000	0.218	0.0	0.0	0.033	0.057	0.0	0.0	0.0	0.308	0.360
22	0.0	0.000	0.099	0.0	0.0	0.012	0.025	0.0	0.0	0.0	0.136	0.151
23	0.0	0.000	0.026	0.0	0.0	0.005	0.013	0.0	0.0	0.0	0.043	0.047
24	0.0	0.000	0.002	0.0	0.0	0.003	0.008	0.0	0.0	0.0	0.013	0.014
25	0.0	0.000	0.000	0.0	0.0	0.003	0.008	0.0	0.0	0.0	0.011	0.011
26	0.0	0.000	0.000	0.0	0.0	0.004	0.013	0.0	0.0	0.0	0.018	0.018
27	0.0	0.000	0.000	0.0	0.0	0.011	0.031	0.0	0.0	0.0	0.042	0.042
28	0.0	0.000	0.0	0.0	0.0	0.034	0.076	0.0	0.0	0.0	0.109	0.109
29	0.0	0.000	0.0	0.0	0.0	0.064	0.119	0.0	0.0	0.0	0.183	0.183
30	0.0	0.000	0.0	0.0	0.0	0.037	0.069	0.0	0.0	0.0	0.106	0.108
31	0.0	0.004	0.0	0.0	0.0	0.005	0.012	0.0	0.0	0.0	0.021	0.048
32	0.0	0.047	0.0	0.0	0.0	0.000	0.001	0.0	0.0	0.0	0.048	0.293
33	0.0	0.197	0.0	0.0	0.0	0.000	0.000	0.0	0.0	0.0	0.197	0.924
34	0.0	0.392	0.0	0.0	0.0	0.000	0.000	0.0	0.0	0.0	0.392	1.354
35	0.0	0.480	0.0	0.0	0.0	0.000	0.000	0.0	0.0	0.0	0.480	1.431

36	0.0	0.464	0.0	0.0	0.0	0.000	0.000	0.0	0.0	0.0	0.464	1.282
37	0.0	0.002	0.0	0.0	0.0	0.0	0.0	0.0	0.0	0.0	0.002	0.003
38	0.0	0.038	0.0	0.0	0.0	0.0	0.0	0.0	0.0	0.0	0.038	0.067
39	0.0	0.006	0.0	0.0	0.0	0.0	0.0	0.0	0.0	0.0	0.006	0.027
40	0.0	0.100	0.0	0.0	0.0	0.0	0.000	0.0	0.0	0.0	0.100	0.286
41	0.0	0.035	0.0	0.0	0.0	0.000	0.000	0.0	0.0	0.0	0.035	0.209
42	0.0	0.255	0.0	0.0	0.0	0.000	0.000	0.0	0.0	0.0	0.255	0.991
43	0.0	0.000	0.0	0.0	0.0	0.000	0.000	0.0	0.0	0.0	0.000	0.000
44	0.0	0.000	0.0	0.0	0.0	0.004	0.016	0.0	0.0	0.0	0.020	0.020
45	0.0	0.000	0.0	0.0	0.0	0.000	0.003	0.0	0.0	0.0	0.003	0.003
46	0.0	0.000	0.0	0.0	0.0	0.018	0.045	0.0	0.0	0.0	0.063	0.063
47	0.0	0.000	0.0	0.0	0.0	0.018	0.049	0.0	0.0	0.0	0.067	0.067
48	0.0	0.000	0.0	0.0	0.0	0.211	0.279	0.0	0.0	0.0	0.490	0.492
49	0.0	0.165	0.000	0.000	0.000	1.198	1.272	0.000	0.0	0.0	2.635	3.393
50	0.0	0.902	0.000	0.012	0.148	0.237	0.269	0.0	0.0	0.0	1.567	4.775
51	0.000	0.334	0.000	0.000	0.000	0.000	0.000	0.0	0.0	0.0	0.336	0.968
52	0.001	0.793	0.000	0.181	0.130	0.005	0.006	0.0	0.0	0.0	1.117	3.370
53	0.002	0.543	0.000	0.077	0.054	0.003	0.004	0.000	0.0	0.0	0.683	2.158
54	0.002	0.353	0.000	0.032	0.023	0.002	0.002	0.000	0.000	0.0	0.414	1.334
55	0.071	0.703	0.000	0.573	0.414	0.021	0.023	0.000	0.000	0.000	1.806	5.061
56	0.036	1.305	0.000	3.670	3.856	0.350	0.347	0.000	0.000	0.000	9.564	16.513
57	0.293	1.021	0.000	2.339	1.876	0.132	0.131	0.000	0.000	0.000	5.792	13.123
58	0.000	0.489	0.000	0.012	0.070	2.080	1.964	0.007	0.000	0.000	4.622	6.655
59	0.000	0.825	0.000	0.422	0.935	1.617	1.506	0.004	0.000	0.000	5.310	10.504
60	0.008	1.084	0.000	2.028	2.767	1.145	1.063	0.002	0.000	0.000	8.097	16.407
61	0.113	1.191	0.000	3.543	3.745	0.765	0.712	0.001	0.000	0.000	10.071	19.776
62	0.0	0.000	0.004	0.0	0.0	0.015	0.034	0.0	0.0	0.0	0.053	0.067
63	0.0	0.000	0.006	0.0	0.0	0.190	0.288	0.0	0.0	0.0	0.485	0.803
64	0.0	0.001	0.006	0.0	0.0	0.841	1.015	0.000	0.000	0.000	1.864	2.714
65	0.0	0.014	0.005	0.000	0.000	1.919	2.022	0.012	0.021	0.010	4.003	5.069
66	0.0	0.072	0.004	0.000	0.000	2.841	2.766	0.332	0.177	0.035	6.228	7.550
67	0.000	0.222	0.004	0.001	0.006	3.162	2.944	0.390	0.137	0.023	6.889	8.568
68	0.001	0.734	0.002	0.599	1.043	2.361	2.124	0.168	0.043	0.007	7.082	14.055
69	0.231	1.054	0.001	2.929	3.123	1.242	1.117	0.041	0.011	0.002	9.749	21.936
70	0.0	0.000	0.000	0.0	0.0	0.000	0.000	0.0	0.0	0.0	0.000	0.000
71	0.0	0.023	0.085	0.000	0.000	2.337	2.337	0.172	0.289	0.355	5.599	8.703
72	0.000	0.224	0.047	0.007	0.027	3.588	3.264	1.523	0.982	0.469	10.132	13.273
73	0.0	0.0	0.000	0.0	0.0	0.000	0.000	0.0	0.0	0.0	0.000	0.000
74	0.0	0.000	0.000	0.0	0.0	0.000	0.000	0.0	0.0	0.0	0.000	0.000
75	0.0	0.000	0.008	0.0	0.0	0.000	0.000	0.0	0.0	0.0	0.008	0.008
76	0.0	0.000	0.111	0.0	0.0	0.001	0.002	0.0	0.0	0.0	0.114	0.114
77	0.0	0.000	0.322	0.0	0.0	0.015	0.028	0.0	0.0	0.0	0.366	0.390
78	0.0	0.000	0.451	0.0	0.0	0.137	0.191	0.000	0.000	0.000	0.779	1.157
79	0.0	0.001	0.562	0.000	0.000	0.574	0.672	0.000	0.000	0.000	1.809	3.585
80	0.0	0.007	0.563	0.000	0.000	1.431	1.493	0.023	0.055	0.122	3.693	7.508
81	0.000	0.031	0.472	0.000	0.000	2.474	2.397	0.494	0.718	0.879	7.466	12.556
82	0.000	0.097	0.352	0.001	0.004	3.299	3.052	1.766	1.905	1.729	12.204	17.384
83	0.000	0.217	0.244	0.022	0.056	3.654	3.284	2.524	2.197	1.623	13.822	18.602
84	0.002	0.382	0.163	0.172	0.308	3.539	3.129	2.236	1.669	1.070	12.669	17.960
85	0.028	0.558	0.106	0.605	0.853	3.111	2.726	1.538	1.028	0.598	11.151	18.690
86	0.021	0.510	0.148	0.490	0.707	3.230	2.831	1.797	1.278	0.799	11.811	18.866

APPLICATION FOR 30 SOURCES AND 50 RECEPTORS
POLLUTANT TSP IS BEING MODELED USING 3 HOURS OF MET DATA
DATA FROM 1980 MPTER GUIDE --- EXAMPLE 4 SEPTEMBER 3,1981

PART SUMMARY CONCENTRATION TABLE(MICROGRAMS/M**3) 79/ 292 : HOUR 14

RECEPTOR NO.	NAME	EAST COORD	NORTH COORD	RECEPTOR HT ABV GRD (M)	RECEPTOR GRD-LVL ELEV (USER HT UNITS)	TOTAL FROM SIGNIF POINT SOURCES	TOTAL FROM ALL SOURCES	CONCENTRATION RANK
1	10, 1.0	2.17	1.98	0.0	0.0	6.0299	16.2491	50
2	20, 1.0	2.34	1.94	0.0	0.0	6.0726	16.5380	49
3	30, 1.0	2.50	1.87	0.0	0.0	6.7661	19.0780	45
4	40, 1.0	2.64	1.77	0.0	0.0	8.1991	24.4772	42
5	50, 1.0	2.77	1.64	0.0	0.0	10.8799	35.0088	40
6	60, 1.0	2.87	1.50	0.0	0.0	19.8129	58.3169	34
7	70, 1.0	2.94	1.34	0.0	0.0	50.3579	110.4126	25
8	80, 1.0	2.98	1.17	0.0	0.0	101.7159	186.1326	14
9	90, 1.0	3.00	1.00	0.0	0.0	132.8331	229.3472	8
10	100, 1.0	2.98	0.83	0.0	0.0	119.6922	223.4176	11
11	110, 1.0	2.94	0.66	0.0	0.0	94.4208	201.3509	12
12	120, 1.0	2.87	0.50	0.0	0.0	92.7102	149.0651	21
13	130, 1.0	2.77	0.36	0.0	0.0	116.9266	153.5971	20
14	140, 1.0	2.64	0.23	0.0	0.0	138.8372	184.8805	15
15	150, 1.0	2.50	0.13	0.0	0.0	117.9585	177.3451	18
16	160, 1.0	2.34	0.06	0.0	0.0	73.1292	133.4659	23
17	170, 1.0	2.17	0.02	0.0	0.0	42.2871	87.4727	30
18	180, 1.0	2.00	0.0	0.0	0.0	25.1279	49.7880	35
19	190, 1.0	1.83	0.02	0.0	0.0	13.9673	23.8252	43
20	200, 1.0	1.66	0.06	0.0	0.0	7.9793	10.9562	56
21	210, 1.0	1.50	0.13	0.0	0.0	4.2714	5.1148	59
22	220, 1.0	1.36	0.23	0.0	0.0	1.8871	2.0973	64
23	230, 1.0	1.23	0.36	0.0	0.0	0.6025	0.6481	73
24	240, 1.0	1.13	0.50	0.0	0.0	0.1842	0.1934	78
25	250, 1.0	1.06	0.66	0.0	0.0	0.1524	0.1541	79
26	260, 1.0	1.02	0.83	0.0	0.0	0.2457	0.2459	77
27	270, 1.0	1.00	1.00	0.0	0.0	0.5819	0.5819	74
28	280, 1.0	1.02	1.17	0.0	0.0	1.5203	1.5204	66
29	290, 1.0	1.06	1.34	0.0	0.0	2.5475	2.5480	63
30	300, 1.0	1.13	1.50	0.0	0.0	1.4787	1.4951	67
31	310, 1.0	1.23	1.64	0.0	0.0	0.2873	0.6704	72
32	320, 1.0	1.36	1.77	0.0	0.0	0.6635	4.0687	60
33	330, 1.0	1.50	1.87	0.0	0.0	2.7324	12.8400	54
34	340, 1.0	1.66	1.94	0.0	0.0	5.4415	18.8082	46
35	350, 1.0	1.83	1.98	0.0	0.0	6.6695	19.8700	44
36	360, 1.0	2.00	2.00	0.0	0.0	6.4441	17.8058	48
37	1	1.00	2.50	0.0	0.0	0.0279	0.0356	82

38	2	1.25	2.40	0.0	0.0	0.5347	0.9311	69
39	3	1.00	2.25	0.0	0.0	0.0797	0.3707	75
40	4	1.25	2.25	0.0	0.0	1.3944	3.9720	61
41	5	1.20	2.00	0.0	0.0	0.4857	2.9089	62
42	6	1.50	2.00	0.0	0.0	3.5469	13.7676	52
43	7	0.75	1.70	0.0	0.0	0.0028	0.0028	83
44	8	1.00	1.60	0.0	0.0	0.2822	0.2832	76
45	9	0.75	1.50	0.0	0.0	0.0446	0.0446	81
46	10	1.00	1.50	0.0	0.0	0.8791	0.8795	71
47	11	0.95	1.25	0.0	0.0	0.9259	0.9259	70
48	12	1.25	1.25	0.0	0.0	6.8098	6.8286	57
49	13	2.00	1.00	0.0	0.0	36.5993	47.1182	37
50	14	2.25	1.25	0.0	0.0	21.7658	66.3256	33
51	15	3.00	1.75	0.0	0.0	4.6611	13.4424	53
52	16	3.00	1.50	0.0	0.0	15.5084	46.8003	38
53	17	3.25	1.50	0.0	0.0	9.4822	29.9759	41
54	18	3.50	1.50	0.0	0.0	5.7452	18.5230	47
55	19	3.50	1.25	0.0	0.0	25.0819	70.2985	32
56	20	3.00	1.00	0.0	0.0	132.8331	229.3472	9
57	21	3.50	1.00	0.0	0.0	80.4406	182.2676	17
58	22	2.50	0.75	0.0	0.0	64.1944	92.4366	29
59	23	2.75	0.75	0.0	0.0	73.7512	145.8955	22
60	24	3.00	0.75	0.0	0.0	112.4631	227.8736	10
61	25	3.25	0.75	0.0	0.0	139.8741	274.6643	2
62	26	1.25	0.50	0.0	0.0	0.7401	0.9332	68
63	27	1.50	0.50	0.0	0.0	6.7363	11.1548	55
64	28	1.75	0.50	0.0	0.0	25.8874	37.6901	39
65	29	2.00	0.50	0.0	0.0	55.5913	70.4017	31
66	30	2.25	0.50	0.0	0.0	86.4953	104.8606	27
67	31	2.50	0.50	0.0	0.0	95.6785	119.0007	25
68	32	3.00	0.50	0.0	0.0	98.3578	195.2025	13
69	33	3.50	0.50	0.0	0.0	135.4003	304.6696	1
70	34	0.75	0.25	0.0	0.0	0.0003	0.0003	84
71	35	2.25	0.25	0.0	0.0	77.7667	120.8689	24
72	36	2.75	0.25	0.0	0.0	140.7235	184.3523	16
73	37	0.50	0.0	0.0	0.0	0.0000	0.0000	86
74	38	0.75	0.0	0.0	0.0	0.0001	0.0001	85
75	39	1.00	0.0	0.0	0.0	0.1079	0.1079	80
76	40	1.25	0.0	0.0	0.0	1.5771	1.5794	65
77	41	1.50	0.0	0.0	0.0	5.0825	5.4175	58
78	42	1.75	0.0	0.0	0.0	10.8158	16.0731	51
79	43	2.00	0.0	0.0	0.0	25.1279	49.7880	36
80	44	2.25	0.0	0.0	0.0	51.2968	104.2844	28
81	45	2.50	0.0	0.0	0.0	103.6949	174.3877	19
82	46	2.75	0.0	0.0	0.0	169.4992	241.4459	7
83	47	3.00	0.0	0.0	0.0	191.9735	258.3647	5
84	48	3.25	0.0	0.0	0.0	175.9564	249.4464	6
85	49	3.50	0.0	0.0	0.0	154.8778	259.5859	4
86	50	3.50	-0.05	0.0	0.0	164.0401	262.0295	3

APPLICATION FOR 30 SOURCES AND 50 RECEPTORS
POLLUTANT TSP IS BEING MODELED USING 3 HOURS OF MET DATA
DATA FROM 1980 MPTER GUIDE --- EXAMPLE 4 SEPTEMBER 3,1981

PART SUMMARY TABLE OF DEPOSITION FLUX (KG/KM**2/HOUR) 79/ 292 : HOUR 10
(GROUND LEVEL RECEPTORS ONLY)

RECEPTOR NO.	NAME	EAST COORD	NORTH COORD	RECEPTOR HT ABV GRD (M)	RECEPTOR GRD-LVL ELEV (USER HT UNITS)	TOTAL FROM SIGNIF POINT SOURCES	TOTAL FROM ALL SOURCES	CONCENTRATION RANK
1	10, 1.0	2.17	1.98	0.0	0.0	0.4342	1.1699	50
2	20, 1.0	2.34	1.94	0.0	0.0	0.4372	1.1907	49
3	30, 1.0	2.50	1.87	0.0	0.0	0.4872	1.3736	45
4	40, 1.0	2.64	1.77	0.0	0.0	0.5903	1.7624	42
5	50, 1.0	2.77	1.64	0.0	0.0	0.7834	2.5206	40
6	60, 1.0	2.87	1.50	0.0	0.0	1.4265	4.1988	34
7	70, 1.0	2.94	1.34	0.0	0.0	3.6258	7.9497	26
8	80, 1.0	2.98	1.17	0.0	0.0	7.3235	13.4015	14
9	90, 1.0	3.00	1.00	0.0	0.0	9.5640	16.5130	8
10	100, 1.0	2.98	0.83	0.0	0.0	8.6178	16.0861	11
11	110, 1.0	2.94	0.66	0.0	0.0	6.7983	14.4973	12
12	120, 1.0	2.87	0.50	0.0	0.0	6.6751	10.7327	21
13	130, 1.0	2.77	0.36	0.0	0.0	8.4187	11.0590	20
14	140, 1.0	2.64	0.23	0.0	0.0	9.9963	13.3114	15
15	150, 1.0	2.50	0.13	0.0	0.0	8.4930	12.7689	18
16	160, 1.0	2.34	0.06	0.0	0.0	5.2653	9.6095	23
17	170, 1.0	2.17	0.02	0.0	0.0	3.0447	6.2980	30
18	180, 1.0	2.00	0.0	0.0	0.0	1.8092	3.5847	35
19	190, 1.0	1.83	0.02	0.0	0.0	1.0056	1.7154	43
20	200, 1.0	1.66	0.06	0.0	0.0	0.5745	0.7888	56
21	210, 1.0	1.50	0.13	0.0	0.0	0.3075	0.3683	59
22	220, 1.0	1.36	0.23	0.0	0.0	0.1359	0.1510	64
23	230, 1.0	1.23	0.36	0.0	0.0	0.0434	0.0467	73
24	240, 1.0	1.13	0.50	0.0	0.0	0.0133	0.0139	78
25	250, 1.0	1.06	0.66	0.0	0.0	0.0110	0.0111	79
26	260, 1.0	1.02	0.83	0.0	0.0	0.0177	0.0177	77
27	270, 1.0	1.00	1.00	0.0	0.0	0.0419	0.0419	74
28	280, 1.0	1.02	1.17	0.0	0.0	0.1095	0.1095	66
29	290, 1.0	1.06	1.34	0.0	0.0	0.1834	0.1835	63
30	300, 1.0	1.13	1.50	0.0	0.0	0.1065	0.1076	67
31	310, 1.0	1.23	1.64	0.0	0.0	0.0207	0.0483	72
32	320, 1.0	1.36	1.77	0.0	0.0	0.0478	0.2929	60
33	330, 1.0	1.50	1.87	0.0	0.0	0.1967	0.9245	54
34	340, 1.0	1.66	1.94	0.0	0.0	0.3918	1.3542	46
35	350, 1.0	1.83	1.98	0.0	0.0	0.4802	1.4306	44
36	360, 1.0	2.00	2.00	0.0	0.0	0.4640	1.2820	48

37	1	1.00	2.50	0.0	0.0	0.0020	0.0026	82
38	2	1.25	2.40	0.0	0.0	0.0385	0.0670	69
39	3	1.00	2.25	0.0	0.0	0.0057	0.0267	75
40	4	1.25	2.25	0.0	0.0	0.1004	0.2860	61
41	5	1.20	2.00	0.0	0.0	0.0350	0.2094	62
42	6	1.50	2.00	0.0	0.0	0.2554	0.9913	52
43	7	0.75	1.70	0.0	0.0	0.0002	0.0002	83
44	8	1.00	1.60	0.0	0.0	0.0203	0.0204	76
45	9	0.75	1.50	0.0	0.0	0.0032	0.0032	81
46	10	1.00	1.50	0.0	0.0	0.0633	0.0633	71
47	11	0.95	1.25	0.0	0.0	0.0667	0.0667	70
48	12	1.25	1.25	0.0	0.0	0.4903	0.4917	57
49	13	2.00	1.00	0.0	0.0	2.6351	3.3925	37
50	14	2.25	1.25	0.0	0.0	1.5671	4.7754	33
51	15	3.00	1.75	0.0	0.0	0.3356	0.9679	53
52	16	3.00	1.50	0.0	0.0	1.1166	3.3696	38
53	17	3.25	1.50	0.0	0.0	0.6827	2.1583	41
54	18	3.50	1.50	0.0	0.0	0.4137	1.3337	47
55	19	3.50	1.25	0.0	0.0	1.8059	5.0615	32
56	20	3.00	1.00	0.0	0.0	9.5640	16.5130	9
57	21	3.50	1.00	0.0	0.0	5.7917	13.1233	17
58	22	2.50	0.75	0.0	0.0	4.6220	6.6554	29
59	23	2.75	0.75	0.0	0.0	5.3101	10.5045	22
60	24	3.00	0.75	0.0	0.0	8.0973	16.4069	10
61	25	3.25	0.75	0.0	0.0	10.0709	19.7758	2
62	26	1.25	0.50	0.0	0.0	0.0533	0.0672	68
63	27	1.50	0.50	0.0	0.0	0.4850	0.8031	55
64	28	1.75	0.50	0.0	0.0	1.8639	2.7137	39
65	29	2.00	0.50	0.0	0.0	4.0026	5.0689	31
66	30	2.25	0.50	0.0	0.0	6.2277	7.5500	27
67	31	2.50	0.50	0.0	0.0	6.8889	8.5600	25
68	32	3.00	0.50	0.0	0.0	7.0818	14.0546	13
69	33	3.50	0.50	0.0	0.0	9.7488	21.9361	1
70	34	0.75	0.25	0.0	0.0	0.0000	0.0000	84
71	35	2.25	0.25	0.0	0.0	5.5992	8.7026	24
72	36	2.75	0.25	0.0	0.0	10.1321	13.2734	16
73	37	0.50	0.0	0.0	0.0	0.0000	0.0000	86
74	38	0.75	0.0	0.0	0.0	0.0000	0.0000	85
75	39	1.00	0.0	0.0	0.0	0.0078	0.0078	80
76	40	1.25	0.0	0.0	0.0	0.1135	0.1137	65
77	41	1.50	0.0	0.0	0.0	0.3659	0.3901	58
78	42	1.75	0.0	0.0	0.0	0.7787	1.1573	51
79	43	2.00	0.0	0.0	0.0	1.8092	3.5847	36
80	44	2.25	0.0	0.0	0.0	3.6934	7.5085	28
81	45	2.50	0.0	0.0	0.0	7.4660	12.5559	19
82	46	2.75	0.0	0.0	0.0	12.2039	17.3841	7
83	47	3.00	0.0	0.0	0.0	13.8221	18.6022	5
84	48	3.25	0.0	0.0	0.0	12.6689	17.9601	6
85	49	3.50	0.0	0.0	0.0	11.1512	18.6902	4
86	50	3.50	-0.05	0.0	0.0	11.8109	18.8661	3

APPLICATION FOR 30 SOURCES AND 50 RECEPTORS
POLLUTANT TSP IS BEING MODELED USING 3 HOURS OF MET DATA
DATA FROM 1980 MPTER GUIDE --- EXAMPLE 4 SEPTEMBER 3,1981

3-HOUR AVERAGE PART CONCENTRATION(MICROGRAMS/M**3) FROM SIGNIFICANT POINT SOURCES 79/292 START HOUR: 12

RANK	1	2	3	4	5	6	7	8	9	10	TOTAL SIGNIF POINT	TOTAL ALL POINT SOURCES
SOURCE #	8	27	1	13	14	3	2	4	5	6		
RECEP #												
1	0.0	5.163	0.000	0.0	0.000	0.049	0.099	0.0	0.0	0.0	5.311	18.507
2	0.0	6.040	0.000	0.000	0.000	0.116	0.205	0.0	0.0	0.0	6.361	22.172
3	0.0	6.838	0.000	0.007	0.020	0.304	0.464	0.0	0.0	0.0	7.633	26.287
4	0.000	7.494	0.000	0.425	0.484	0.791	1.059	0.0	0.0	0.0	10.253	32.460
5	0.000	7.952	0.000	2.761	3.143	1.907	2.290	0.000	0.000	0.0	18.052	14.811
6	0.013	8.201	0.000	9.283	10.187	4.074	4.478	0.000	0.000	0.000	36.237	67.862
7	0.130	8.280	0.001	17.171	18.278	7.506	7.710	0.000	0.000	0.000	59.075	96.036
8	0.406	8.244	0.007	22.495	23.376	11.797	11.533	0.001	0.000	0.000	77.858	120.833
9	0.658	8.118	0.057	24.928	25.505	15.897	15.036	0.053	0.007	0.001	90.260	144.199
10	0.620	7.924	0.293	25.054	25.692	18.829	17.463	0.718	0.181	0.031	96.804	171.176
11	0.340	7.706	1.046	22.423	24.108	20.468	18.787	3.384	1.456	0.454	100.171	187.956
12	0.102	7.472	2.696	15.862	19.410	21.368	19.511	7.157	4.570	2.298	100.447	186.091
13	0.015	7.098	5.181	7.694	11.616	21.901	19.969	9.144	7.169	4.966	94.753	162.375
14	0.001	6.373	7.679	2.286	4.558	22.005	20.108	9.300	7.715	6.020	86.045	140.492
15	0.000	5.203	9.116	0.374	1.058	21.640	19.880	7.967	6.749	5.467	77.454	125.048
16	0.000	3.757	9.030	0.029	0.130	20.861	19.340	4.946	4.542	4.431	67.067	107.776
17	0.000	2.368	7.732	0.001	0.007	19.421	18.340	1.415	1.804	2.192	53.279	85.912
18	0.000	1.300	5.812	0.000	0.000	16.895	16.509	0.125	0.195	0.291	41.128	65.087
19	0.0	0.628	3.815	0.000	0.000	13.321	13.733	0.001	0.002	0.002	31.503	46.948
20	0.0	0.273	2.725	0.000	0.000	9.404	10.431	0.000	0.000	0.000	22.833	31.042
21	0.0	0.110	1.686	0.000	0.000	5.992	7.284	0.000	0.000	0.0	15.072	18.988
22	0.0	0.043	0.816	0.0	0.000	3.538	4.785	0.0	0.0	0.0	9.182	10.913
23	0.0	0.018	0.275	0.0	0.0	2.017	3.062	0.0	0.0	0.0	5.373	5.982
24	0.0	0.008	0.054	0.0	0.0	1.173	1.991	0.0	0.0	0.0	3.226	3.394
25	0.0	0.005	0.004	0.0	0.0	0.782	1.365	0.0	0.0	0.0	2.155	2.195
26	0.0	0.004	0.000	0.0	0.0	0.727	1.185	0.0	0.0	0.0	1.916	1.936
27	0.0	0.006	0.000	0.0	0.0	0.734	1.194	0.0	0.0	0.0	1.934	1.961
28	0.0	0.014	0.000	0.0	0.0	0.679	1.103	0.0	0.0	0.0	1.797	1.856
29	0.0	0.049	0.0	0.0	0.0	0.509	0.883	0.0	0.0	0.0	1.441	1.635
30	0.0	0.192	0.0	0.0	0.0	0.379	0.687	0.0	0.0	0.0	1.258	2.016
31	0.0	0.646	0.0	0.0	0.0	0.255	0.478	0.0	0.0	0.0	1.379	3.772
32	0.0	1.454	0.0	0.0	0.0	0.114	0.244	0.0	0.0	0.0	1.812	6.419
33	0.0	2.091	0.0	0.0	0.0	0.045	0.110	0.0	0.0	0.0	2.246	8.236
34	0.0	2.677	0.0	0.0	0.0	0.023	0.059	0.0	0.0	0.0	2.760	9.505
35	0.0	3.428	0.0	0.0	0.0	0.019	0.046	0.0	0.0	0.0	3.494	11.990
36	0.0	4.271	0.000	0.0	0.0	0.025	0.059	0.0	0.0	0.0	4.355	15.087
37	0.0	0.021	0.0	0.0	0.0	0.0	0.0	0.0	0.0	0.0	0.021	0.039
38	0.0	0.409	0.0	0.0	0.0	0.000	0.000	0.0	0.0	0.0	0.409	1.052
39	0.0	0.148	0.0	0.0	0.0	0.000	0.000	0.0	0.0	0.0	0.148	0.406

40	0.0	0.735	0.0	0.0	0.0	0.000	0.000	0.0	0.0	0.0	0.735	2.286
41	0.0	0.875	0.0	0.0	0.0	0.000	0.002	0.0	0.0	0.0	0.877	3.339
42	0.0	1.954	0.0	0.0	0.0	0.003	0.014	0.0	0.0	0.0	1.971	7.208
43	0.0	0.000	0.0	0.0	0.0	0.000	0.003	0.0	0.0	0.0	0.004	0.004
44	0.0	0.047	0.0	0.0	0.0	0.069	0.209	0.0	0.0	0.0	0.324	0.526
45	0.0	0.000	0.0	0.0	0.0	0.004	0.036	0.0	0.0	0.0	0.040	0.040
46	0.0	0.032	0.0	0.0	0.0	0.141	0.357	0.0	0.0	0.0	0.530	0.672
47	0.0	0.006	0.0	0.0	0.0	0.359	0.697	0.0	0.0	0.0	1.062	1.087
48	0.0	0.354	0.000	0.0	0.0	1.504	1.952	0.0	0.0	0.0	3.810	5.166
49	0.0	6.440	0.005	0.000	0.010	9.722	10.454	0.000	0.000	0.0	26.631	17.689
50	0.0	8.039	0.000	1.922	5.304	8.332	9.004	0.000	0.0	0.0	32.601	58.234
51	0.000	7.377	0.000	0.927	1.019	0.947	1.175	0.000	0.000	0.0	11.445	34.002
52	0.057	8.072	0.000	10.368	10.558	3.961	4.304	0.000	0.000	0.000	37.321	69.783
53	0.191	7.698	0.000	10.090	9.461	3.640	3.888	0.000	0.000	0.000	34.969	69.355
54	0.305	7.184	0.000	8.306	7.502	3.249	3.426	0.000	0.000	0.000	29.971	64.938
55	1.238	7.371	0.008	19.554	18.197	7.997	7.830	0.002	0.000	0.000	62.196	111.994
56	0.658	8.118	0.057	24.928	25.505	15.897	15.036	0.053	0.007	0.001	90.260	144.199
57	2.145	7.265	0.093	23.872	22.887	13.909	12.973	0.114	0.026	0.005	83.289	147.759
58	0.000	7.923	0.342	4.910	9.822	17.958	17.153	0.924	0.232	0.027	59.290	97.556
59	0.038	8.003	0.456	17.777	21.677	19.239	17.984	1.218	0.352	0.064	86.807	151.906
60	0.636	7.792	0.551	24.714	25.379	19.712	18.152	1.648	0.545	0.127	99.256	143.554
61	1.797	7.459	0.619	25.273	24.779	19.421	17.710	1.754	0.648	0.184	99.644	195.822
62	0.0	0.034	0.134	0.0	0.0	2.509	3.654	0.0	0.0	0.0	6.330	7.104
63	0.0	0.331	0.410	0.0	0.000	6.953	8.170	0.0	0.0	0.0	15.864	20.316
64	0.0	1.443	0.721	0.000	0.000	11.584	12.217	0.000	0.000	0.000	25.966	37.376
65	0.0	3.526	0.989	0.000	0.001	15.358	15.307	0.401	0.232	0.080	35.892	57.033
66	0.000	5.724	1.561	0.044	0.273	18.260	17.541	2.363	1.600	0.834	48.200	81.255
67	0.000	7.083	2.119	1.877	4.510	20.172	18.878	3.926	2.748	1.475	62.787	106.695
68	0.397	7.367	2.814	20.334	22.204	21.458	19.471	7.954	5.038	2.556	109.593	212.878
69	3.673	6.710	2.868	22.038	21.297	20.632	18.442	7.272	4.512	2.394	109.839	228.027
70	0.0	0.000	0.002	0.0	0.0	0.006	0.025	0.0	0.0	0.0	0.034	0.034
71	0.000	4.174	4.846	0.013	0.081	19.669	18.563	3.347	3.211	2.706	56.610	91.920
72	0.008	6.711	7.739	5.020	8.239	22.222	20.195	10.760	9.053	7.128	97.075	160.362
73	0.0	0.000	0.000	0.0	0.0	0.000	0.000	0.0	0.0	0.0	0.000	0.000
74	0.0	0.000	0.012	0.0	0.0	0.003	0.013	0.0	0.0	0.0	0.028	0.028
75	0.0	0.000	0.281	0.0	0.0	0.119	0.273	0.0	0.0	0.0	0.674	0.677
76	0.0	0.007	1.071	0.0	0.0	1.220	1.930	0.0	0.0	0.0	4.229	4.547
77	0.0	0.073	2.240	0.000	0.000	5.066	6.289	0.000	0.000	0.000	13.668	17.002
78	0.0	0.402	3.467	0.000	0.000	11.301	12.052	0.000	0.000	0.000	27.223	39.277
79	0.000	1.300	5.812	0.000	0.000	16.895	16.509	0.125	0.195	0.291	41.128	65.087
80	0.000	2.806	8.945	0.004	0.025	20.183	18.862	2.757	2.883	3.265	59.730	96.182
81	0.000	4.455	12.079	0.206	0.606	21.759	19.891	9.066	8.320	7.185	83.569	131.248
82	0.004	5.658	14.606	2.078	3.825	22.441	20.244	13.851	12.842	11.525	107.074	166.012
83	0.125	6.178	16.150	7.418	10.054	22.507	20.109	16.422	15.557	14.360	128.877	210.071
84	1.046	6.172	16.660	13.511	15.137	22.059	19.571	17.223	16.525	15.412	143.317	252.313
85	3.565	5.920	16.315	16.406	16.597	21.264	18.776	16.834	16.141	14.879	146.696	269.544
86	3.384	5.841	18.044	15.645	15.986	21.238	18.740	17.034	16.545	15.594	148.050	268.723

APPLICATION FOR 30 SOURCES AND 50 RECEPTORS
POLLUTANT TSP IS BEING MODELED USING 3 HOURS OF MET DATA
DATA FROM 1980 MPTER GUIDE --- EXAMPLE 4 SEPTEMBER 3,1981

3-HOUR AVERAGE PART SURFACE DEPOSITION FLUX (KG/KM**2/HOUR) FROM SIGNIFICANT POINT SOURCES 79/292 START HOUR: 12

RANK	1	2	3	4	5	6	7	8	9	10	TOTAL SIGNIF POINT	TOTAL ALL POINT SOURCES
SOURCE #	8	27	1	13	14	3	2	4	5	6		
GRD LVL RECEP.												
1	0.0	0.372	0.000	0.0	0.000	0.004	0.007	0.0	0.0	0.0	0.382	1.333
2	0.0	0.435	0.000	0.000	0.000	0.008	0.015	0.0	0.0	0.0	0.458	1.596
3	0.0	0.492	0.000	0.001	0.001	0.022	0.033	0.0	0.0	0.0	0.550	1.893
4	0.000	0.540	0.000	0.031	0.035	0.057	0.076	0.0	0.0	0.0	0.738	2.337
5	0.000	0.573	0.000	0.199	0.226	0.137	0.165	0.000	0.000	0.0	1.300	3.226
6	0.001	0.590	0.000	0.668	0.733	0.293	0.322	0.000	0.000	0.000	2.609	4.886
7	0.009	0.596	0.000	1.236	1.316	0.540	0.555	0.000	0.000	0.000	4.253	6.915
8	0.029	0.594	0.001	1.620	1.683	0.849	0.830	0.000	0.000	0.000	5.606	8.700
9	0.047	0.584	0.004	1.795	1.836	1.145	1.083	0.004	0.000	0.000	6.499	10.382
10	0.045	0.571	0.021	1.804	1.850	1.356	1.257	0.052	0.013	0.002	6.970	12.325
11	0.024	0.555	0.075	1.614	1.736	1.474	1.353	0.244	0.105	0.033	7.212	13.533
12	0.007	0.538	0.194	1.142	1.398	1.538	1.405	0.515	0.329	0.165	7.232	13.399
13	0.001	0.511	0.373	0.554	0.836	1.577	1.438	0.658	0.516	0.358	6.822	11.691
14	0.000	0.459	0.553	0.165	0.328	1.584	1.448	0.670	0.555	0.433	6.195	10.115
15	0.000	0.375	0.656	0.027	0.076	1.558	1.431	0.574	0.486	0.394	5.577	9.003
16	0.000	0.271	0.650	0.002	0.009	1.502	1.392	0.356	0.327	0.319	4.829	7.760
17	0.000	0.170	0.557	0.000	0.001	1.398	1.320	0.102	0.130	0.158	3.836	6.186
18	0.000	0.094	0.418	0.000	0.000	1.216	1.189	0.009	0.014	0.021	2.961	4.686
19	0.0	0.045	0.275	0.000	0.000	0.959	0.989	0.000	0.000	0.000	2.268	3.380
20	0.0	0.020	0.196	0.000	0.000	0.677	0.751	0.000	0.000	0.000	1.644	2.235
21	0.0	0.008	0.121	0.000	0.000	0.431	0.524	0.000	0.000	0.0	1.085	1.367
22	0.0	0.003	0.059	0.0	0.000	0.255	0.345	0.0	0.0	0.0	0.661	0.786
23	0.0	0.001	0.020	0.0	0.0	0.145	0.220	0.0	0.0	0.0	0.387	0.431
24	0.0	0.001	0.004	0.0	0.0	0.084	0.143	0.0	0.0	0.0	0.232	0.244
25	0.0	0.000	0.000	0.0	0.0	0.056	0.098	0.0	0.0	0.0	0.155	0.158
26	0.0	0.000	0.000	0.0	0.0	0.052	0.085	0.0	0.0	0.0	0.138	0.139
27	0.0	0.000	0.000	0.0	0.0	0.053	0.086	0.0	0.0	0.0	0.139	0.141
28	0.0	0.001	0.000	0.0	0.0	0.049	0.079	0.0	0.0	0.0	0.129	0.134
29	0.0	0.003	0.0	0.0	0.0	0.037	0.064	0.0	0.0	0.0	0.104	0.118
30	0.0	0.014	0.0	0.0	0.0	0.027	0.049	0.0	0.0	0.0	0.091	0.145
31	0.0	0.047	0.0	0.0	0.0	0.018	0.034	0.0	0.0	0.0	0.099	0.272
32	0.0	0.105	0.0	0.0	0.0	0.008	0.018	0.0	0.0	0.0	0.130	0.462
33	0.0	0.151	0.0	0.0	0.0	0.003	0.008	0.0	0.0	0.0	0.162	0.593
34	0.0	0.193	0.0	0.0	0.0	0.002	0.004	0.0	0.0	0.0	0.199	0.684
35	0.0	0.247	0.0	0.0	0.0	0.001	0.003	0.0	0.0	0.0	0.252	0.863
36	0.0	0.308	0.000	0.0	0.0	0.002	0.004	0.0	0.0	0.0	0.314	1.086

37	0.0	0.002	0.0	0.0	0.0	0.0	0.0	0.0	0.0	0.0	0.002	0.003
38	0.0	0.029	0.0	0.0	0.0	0.000	0.000	0.0	0.0	0.0	0.029	0.076
39	0.0	0.011	0.0	0.0	0.0	0.000	0.000	0.0	0.0	0.0	0.011	0.029
40	0.0	0.053	0.0	0.0	0.0	0.000	0.000	0.0	0.0	0.0	0.053	0.165
41	0.0	0.063	0.0	0.0	0.0	0.000	0.000	0.0	0.0	0.0	0.063	0.210
42	0.0	0.141	0.0	0.0	0.0	0.000	0.001	0.0	0.0	0.0	0.142	0.519
43	0.0	0.000	0.0	0.0	0.0	0.000	0.000	0.0	0.0	0.0	0.000	0.000
44	0.0	0.003	0.0	0.0	0.0	0.005	0.015	0.0	0.0	0.0	0.023	0.038
45	0.0	0.000	0.0	0.0	0.0	0.000	0.003	0.0	0.0	0.0	0.003	0.003
46	0.0	0.002	0.0	0.0	0.0	0.010	0.026	0.0	0.0	0.0	0.038	0.048
47	0.0	0.000	0.0	0.0	0.0	0.026	0.050	0.0	0.0	0.0	0.076	0.078
48	0.0	0.026	0.000	0.0	0.0	0.108	0.141	0.0	0.0	0.0	0.274	0.372
49	0.0	0.464	0.000	0.000	0.001	0.700	0.753	0.000	0.000	0.0	1.917	3.434
50	0.0	0.579	0.000	0.138	0.382	0.600	0.648	0.000	0.0	0.0	2.347	4.133
51	0.000	0.531	0.000	0.067	0.073	0.068	0.085	0.000	0.000	0.0	0.824	2.448
52	0.004	0.581	0.000	0.747	0.760	0.285	0.310	0.000	0.000	0.000	2.687	5.024
53	0.014	0.554	0.000	0.727	0.681	0.262	0.280	0.000	0.000	0.000	2.518	4.994
54	0.022	0.517	0.000	0.598	0.540	0.234	0.247	0.000	0.000	0.000	2.158	4.676
55	0.089	0.531	0.001	1.408	1.310	0.576	0.564	0.000	0.000	0.000	4.478	8.064
56	0.047	0.584	0.004	1.795	1.836	1.145	1.083	0.004	0.000	0.000	6.499	10.382
57	0.154	0.523	0.007	1.719	1.648	1.001	0.934	0.008	0.002	0.000	5.997	10.639
58	0.000	0.570	0.025	0.354	0.707	1.293	1.235	0.067	0.017	0.002	4.269	7.024
59	0.003	0.576	0.033	1.280	1.561	1.385	1.295	0.088	0.025	0.005	6.250	10.937
60	0.046	0.561	0.040	1.779	1.827	1.419	1.307	0.119	0.039	0.009	7.146	13.216
61	0.129	0.537	0.045	1.820	1.784	1.398	1.275	0.126	0.047	0.013	7.174	14.099
62	0.0	0.002	0.010	0.0	0.0	0.181	0.263	0.0	0.0	0.0	0.456	0.511
63	0.0	0.024	0.030	0.0	0.000	0.501	0.588	0.0	0.0	0.0	1.142	1.463
64	0.0	0.104	0.052	0.000	0.000	0.834	0.880	0.000	0.000	0.000	1.870	2.691
65	0.0	0.254	0.071	0.000	0.000	1.106	1.102	0.029	0.017	0.006	2.584	4.106
66	0.000	0.412	0.112	0.003	0.020	1.315	1.263	0.170	0.115	0.060	3.470	5.850
67	0.000	0.510	0.153	0.135	0.325	1.452	1.359	0.283	0.198	0.106	4.521	7.682
68	0.029	0.530	0.203	1.464	1.599	1.545	1.402	0.573	0.363	0.184	7.891	15.327
69	0.264	0.483	0.206	1.587	1.533	1.486	1.328	0.524	0.325	0.172	7.908	16.418
70	0.0	0.000	0.000	0.0	0.0	0.000	0.002	0.0	0.0	0.0	0.002	0.002
71	0.000	0.301	0.349	0.001	0.006	1.416	1.337	0.241	0.231	0.195	4.076	6.610
72	0.001	0.483	0.557	0.361	0.593	1.600	1.454	0.775	0.652	0.513	6.989	11.546
73	0.0	0.000	0.000	0.0	0.0	0.000	0.000	0.0	0.0	0.0	0.000	0.000
74	0.0	0.000	0.001	0.0	0.0	0.000	0.001	0.0	0.0	0.0	0.002	0.002
75	0.0	0.000	0.020	0.0	0.0	0.009	0.020	0.0	0.0	0.0	0.049	0.049
76	0.0	0.000	0.077	0.0	0.0	0.088	0.139	0.0	0.0	0.0	0.304	0.327
77	0.0	0.005	0.161	0.000	0.000	0.365	0.453	0.000	0.000	0.000	0.984	1.224
78	0.0	0.029	0.250	0.000	0.000	0.814	0.868	0.000	0.000	0.000	1.960	2.828
79	0.000	0.094	0.418	0.000	0.000	1.216	1.189	0.009	0.014	0.021	2.961	4.686
80	0.000	0.202	0.644	0.000	0.002	1.453	1.358	0.198	0.208	0.235	4.301	6.925
81	0.000	0.321	0.870	0.015	0.044	1.567	1.432	0.653	0.599	0.517	6.017	9.450
82	0.000	0.407	1.052	0.150	0.275	1.616	1.458	0.997	0.925	0.830	7.709	11.953
83	0.009	0.445	1.163	0.534	0.724	1.620	1.448	1.182	1.120	1.034	9.279	15.125
84	0.075	0.444	1.200	0.973	1.090	1.588	1.409	1.240	1.190	1.110	10.319	18.167
85	0.257	0.426	1.175	1.181	1.195	1.531	1.332	1.212	1.162	1.071	10.562	19.407
86	0.244	0.421	1.299	1.126	1.151	1.529	1.349	1.226	1.191	1.123	10.660	19.348

APPLICATION FOR 30 SOURCES AND 50 RECEPTORS
POLLUTANT TSP IS BEING MODELED USING 3 HOURS OF MET DATA
DATA FROM 1980 MPTER GUIDE --- EXAMPLE 4 SEPTEMBER 3,1981

3-HOUR AVERAGE PART SUMMARY CONCENTRATION TABLE(MICROGRAMS/M**3) 79/292 START HOUR: 12

RECEPTOR NO.	NAME	EAST COORD	NORTH COORD	RECEPTOR HT ABV GRD (M)	RECEPTOR GRD-LVL ELEV (USER HT UNITS)	TOTAL FROM SIGNIF POINT SOURCES	TOTAL FROM ALL SOURCES	CONCENTRATION RANK
1	10, 1.0	2.17	1.98	0.0	0.0	5.3113	18.5074	52
2	20, 1.0	2.34	1.94	0.0	0.0	6.3607	22.1721	49
3	30, 1.0	2.50	1.87	0.0	0.0	7.6335	26.2873	48
4	40, 1.0	2.64	1.77	0.0	0.0	10.2526	32.4600	46
5	50, 1.0	2.77	1.64	0.0	0.0	18.0521	44.8107	42
6	60, 1.0	2.87	1.50	0.0	0.0	36.2367	67.8623	34
7	70, 1.0	2.94	1.34	0.0	0.0	59.0746	96.0364	28
8	80, 1.0	2.98	1.17	0.0	0.0	77.8580	120.8331	22
9	90, 1.0	3.00	1.00	0.0	0.0	90.2598	144.1988	17
10	100, 1.0	2.98	0.83	0.0	0.0	96.8042	171.1764	11
11	110, 1.0	2.94	0.66	0.0	0.0	100.1713	187.9559	8
12	120, 1.0	2.87	0.50	0.0	0.0	100.4466	186.0914	9
13	130, 1.0	2.77	0.36	0.0	0.0	94.7529	162.3755	13
14	140, 1.0	2.64	0.23	0.0	0.0	86.0450	140.4924	19
15	150, 1.0	2.50	0.13	0.0	0.0	77.4544	125.0482	21
16	160, 1.0	2.34	0.06	0.0	0.0	67.0667	107.7757	24
17	170, 1.0	2.17	0.02	0.0	0.0	53.2786	85.9120	30
18	180, 1.0	2.00	0.0	0.0	0.0	41.1282	65.0871	35
19	190, 1.0	1.83	0.02	0.0	0.0	31.5032	46.9481	41
20	200, 1.0	1.66	0.06	0.0	0.0	22.8334	31.0418	47
21	210, 1.0	1.50	0.13	0.0	0.0	15.0724	18.9885	51
22	220, 1.0	1.36	0.23	0.0	0.0	9.1820	10.9130	56
23	230, 1.0	1.23	0.36	0.0	0.0	5.3731	5.9819	62
24	240, 1.0	1.13	0.50	0.0	0.0	3.2262	3.3941	66
25	250, 1.0	1.06	0.66	0.0	0.0	2.1551	2.1949	69
26	260, 1.0	1.02	0.83	0.0	0.0	1.9164	1.9359	72
27	270, 1.0	1.00	1.00	0.0	0.0	1.9342	1.9605	71
28	280, 1.0	1.02	1.17	0.0	0.0	1.7969	1.8564	73
29	290, 1.0	1.06	1.34	0.0	0.0	1.4406	1.6355	74
30	300, 1.0	1.13	1.50	0.0	0.0	1.2580	2.0159	70
31	310, 1.0	1.23	1.64	0.0	0.0	1.3795	3.7721	65
32	320, 1.0	1.36	1.77	0.0	0.0	1.8121	6.4185	61
33	330, 1.0	1.50	1.87	0.0	0.0	2.2458	8.2355	58
34	340, 1.0	1.66	1.94	0.0	0.0	2.7598	9.5048	57
35	350, 1.0	1.83	1.98	0.0	0.0	3.4936	11.9905	55
36	360, 1.0	2.00	2.00	0.0	0.0	4.3546	15.0871	54

37	1	1.00	2.50	0.0	0.0	0.0214	0.0388	82
38	2	1.25	2.40	0.0	0.0	0.4087	1.0520	76
39	3	1.00	2.25	0.0	0.0	0.1479	0.4063	80
40	4	1.25	2.25	0.0	0.0	0.7349	2.2856	68
41	5	1.20	2.00	0.0	0.0	0.8769	3.3388	67
42	6	1.50	2.00	0.0	0.0	1.9711	7.2084	59
43	7	0.75	1.70	0.0	0.0	0.0036	0.0041	85
44	8	1.00	1.60	0.0	0.0	0.3237	0.5262	79
45	9	0.75	1.50	0.0	0.0	0.0395	0.0399	81
46	10	1.00	1.50	0.0	0.0	0.5304	0.6716	78
47	11	0.95	1.25	0.0	0.0	1.0621	1.0866	75
48	12	1.25	1.25	0.0	0.0	3.8099	5.1661	63
49	13	2.00	1.00	0.0	0.0	26.6306	47.6890	40
50	14	2.25	1.25	0.0	0.0	32.6006	58.2338	38
51	15	3.00	1.75	0.0	0.0	11.4448	34.0024	45
52	16	3.00	1.50	0.0	0.0	37.3206	69.7825	32
53	17	3.25	1.50	0.0	0.0	34.9687	69.3555	33
54	18	3.50	1.50	0.0	0.0	29.9707	64.9377	37
55	19	3.50	1.25	0.0	0.0	62.1962	111.9945	23
56	20	3.00	1.00	0.0	0.0	90.2598	144.1988	18
57	21	3.50	1.00	0.0	0.0	83.2888	147.7591	16
58	22	2.50	0.75	0.0	0.0	59.2903	97.5556	26
59	23	2.75	0.75	0.0	0.0	86.8068	151.9058	15
60	24	3.00	0.75	0.0	0.0	99.2558	183.5544	10
61	25	3.25	0.75	0.0	0.0	99.6441	195.8215	7
62	26	1.25	0.50	0.0	0.0	6.3302	7.1039	60
63	27	1.50	0.50	0.0	0.0	15.8639	20.3160	50
64	28	1.75	0.50	0.0	0.0	25.9656	37.3763	44
65	29	2.00	0.50	0.0	0.0	35.8925	57.0328	39
66	30	2.25	0.50	0.0	0.0	48.1997	81.2547	31
67	31	2.50	0.50	0.0	0.0	62.7875	106.6950	25
68	32	3.00	0.50	0.0	0.0	109.5928	212.8781	5
69	33	3.50	0.50	0.0	0.0	109.8386	228.0270	4
70	34	0.75	0.25	0.0	0.0	0.0340	0.0340	83
71	35	2.25	0.25	0.0	0.0	56.6102	91.9199	29
72	36	2.75	0.25	0.0	0.0	97.0745	160.3616	14
73	37	0.50	0.0	0.0	0.0	0.0001	0.0001	86
74	38	0.75	0.0	0.0	0.0	0.0279	0.0280	84
75	39	1.00	0.0	0.0	0.0	0.6740	0.6775	77
76	40	1.25	0.0	0.0	0.0	4.2288	4.5472	64
77	41	1.50	0.0	0.0	0.0	13.6679	17.0024	53
78	42	1.75	0.0	0.0	0.0	27.2227	39.2772	43
79	43	2.00	0.0	0.0	0.0	41.1282	65.0871	36
80	44	2.25	0.0	0.0	0.0	59.7297	96.1819	27
81	45	2.50	0.0	0.0	0.0	83.5686	131.2485	20
82	46	2.75	0.0	0.0	0.0	107.0740	166.0120	12
83	47	3.00	0.0	0.0	0.0	128.8772	210.0713	6
84	48	3.25	0.0	0.0	0.0	143.3166	252.3130	3
85	49	3.50	0.0	0.0	0.0	146.6960	269.5436	1
86	50	3.50	-0.05	0.0	0.0	148.0499	268.7227	2

APPLICATION FOR 30 SOURCES AND 50 RECEPTORS
POLLUTANT TSP IS BEING MODELED USING 3 HOURS OF MET DATA
DATA FROM 1980 MPTER GUIDE --- EXAMPLE 4 SEPTEMBER 3,1981

3-HOUR AVERAGE PART SUMMARY TABLE OF DEPOSITION FLUX (KG/KM**2/HOUR) 79/292 START HOUR: 12
(GROUND LEVEL RECEPTORS ONLY)

RECEPTOR NO.	NAME	EAST COORD	NORTH COORD	RECEPTOR HT ABV GRD (M)	RECEPTOR GRD-LVL ELEV (USER HT UNITS)	TOTAL FROM SIGNIF POINT SOURCES	TOTAL FROM ALL SOURCES	CONCENTRATION RANK
1	10, 1.0	2.17	1.98	0.0	0.0	0.3824	1.3325	52
2	20, 1.0	2.34	1.94	0.0	0.0	0.4580	1.5964	49
3	30, 1.0	2.50	1.87	0.0	0.0	0.5496	1.8927	48
4	40, 1.0	2.64	1.77	0.0	0.0	0.7382	2.3371	46
5	50, 1.0	2.77	1.64	0.0	0.0	1.2998	3.2264	42
6	60, 1.0	2.87	1.50	0.0	0.0	2.6090	4.8861	34
7	70, 1.0	2.94	1.34	0.0	0.0	4.2534	6.9146	28
8	80, 1.0	2.98	1.17	0.0	0.0	5.6058	8.7000	22
9	90, 1.0	3.00	1.00	0.0	0.0	6.4987	10.3823	17
10	100, 1.0	2.98	0.83	0.0	0.0	6.9699	12.3247	11
11	110, 1.0	2.94	0.66	0.0	0.0	7.2123	13.5328	8
12	120, 1.0	2.87	0.50	0.0	0.0	7.2322	13.3986	9
13	130, 1.0	2.77	0.36	0.0	0.0	6.8222	11.6911	13
14	140, 1.0	2.64	0.23	0.0	0.0	6.1952	10.1154	19
15	150, 1.0	2.50	0.13	0.0	0.0	5.5767	9.0035	21
16	160, 1.0	2.34	0.06	0.0	0.0	4.8288	7.7599	24
17	170, 1.0	2.17	0.02	0.0	0.0	3.8361	6.1857	30
18	180, 1.0	2.00	0.0	0.0	0.0	2.9612	4.6863	35
19	190, 1.0	1.83	0.02	0.0	0.0	2.2682	3.3803	41
20	200, 1.0	1.66	0.06	0.0	0.0	1.6440	2.2350	47
21	210, 1.0	1.50	0.13	0.0	0.0	1.0852	1.3672	51
22	220, 1.0	1.36	0.23	0.0	0.0	0.6611	0.7857	56
23	230, 1.0	1.23	0.36	0.0	0.0	0.3869	0.4307	62
24	240, 1.0	1.13	0.50	0.0	0.0	0.2323	0.2444	66
25	250, 1.0	1.06	0.66	0.0	0.0	0.1552	0.1580	69
26	260, 1.0	1.02	0.83	0.0	0.0	0.1380	0.1394	72
27	270, 1.0	1.00	1.00	0.0	0.0	0.1393	0.1412	71
28	280, 1.0	1.02	1.17	0.0	0.0	0.1294	0.1337	73
29	290, 1.0	1.06	1.34	0.0	0.0	0.1037	0.1178	74
30	300, 1.0	1.13	1.50	0.0	0.0	0.0906	0.1451	70
31	310, 1.0	1.23	1.64	0.0	0.0	0.0993	0.2716	65
32	320, 1.0	1.36	1.77	0.0	0.0	0.1305	0.4621	61
33	330, 1.0	1.50	1.87	0.0	0.0	0.1617	0.5930	58
34	340, 1.0	1.66	1.94	0.0	0.0	0.1987	0.6843	57
35	350, 1.0	1.83	1.98	0.0	0.0	0.2515	0.8633	55

36	360, 1.0	2.00	2.00	0.0	0.0	0.3135	1.0863	54
37	1	1.00	2.50	0.0	0.0	0.0015	0.0028	82
38	2	1.25	2.40	0.0	0.0	0.0294	0.0757	76
39	3	1.00	2.25	0.0	0.0	0.0107	0.0293	80
40	4	1.25	2.25	0.0	0.0	0.0529	0.1646	68
41	5	1.20	2.00	0.0	0.0	0.0631	0.2404	67
42	6	1.50	2.00	0.0	0.0	0.1419	0.5190	59
43	7	0.75	1.70	0.0	0.0	0.0003	0.0003	85
44	8	1.00	1.60	0.0	0.0	0.0233	0.0379	79
45	9	0.75	1.50	0.0	0.0	0.0028	0.0029	81
46	10	1.00	1.50	0.0	0.0	0.0382	0.0484	78
47	11	0.95	1.25	0.0	0.0	0.0765	0.0782	75
48	12	1.25	1.25	0.0	0.0	0.2743	0.3720	63
49	13	2.00	1.00	0.0	0.0	1.9174	3.4336	40
50	14	2.25	1.25	0.0	0.0	2.3472	4.1928	38
51	15	3.00	1.75	0.0	0.0	0.8240	2.4482	45
52	16	3.00	1.50	0.0	0.0	2.6871	5.0243	32
53	17	3.25	1.50	0.0	0.0	2.5177	4.9936	33
54	18	3.50	1.50	0.0	0.0	2.1579	4.6755	37
55	19	3.50	1.25	0.0	0.0	4.4781	8.0636	23
56	20	3.00	1.00	0.0	0.0	6.4987	10.3823	18
57	21	3.50	1.00	0.0	0.0	5.9968	10.6387	16
58	22	2.50	0.75	0.0	0.0	4.2689	7.0240	26
59	23	2.75	0.75	0.0	0.0	6.2501	10.9372	15
60	24	3.00	0.75	0.0	0.0	7.1464	13.2159	10
61	25	3.25	0.75	0.0	0.0	7.1744	14.0991	7
62	26	1.25	0.50	0.0	0.0	0.4558	0.5115	60
63	27	1.50	0.50	0.0	0.0	1.1422	1.4628	50
64	28	1.75	0.50	0.0	0.0	1.8695	2.6911	44
65	29	2.00	0.50	0.0	0.0	2.5843	4.1064	39
66	30	2.25	0.50	0.0	0.0	3.4704	5.8503	31
67	31	2.50	0.50	0.0	0.0	4.5207	7.6820	25
68	32	3.00	0.50	0.0	0.0	7.8907	15.3272	5
69	33	3.50	0.50	0.0	0.0	7.9084	16.4179	4
70	34	0.75	0.25	0.0	0.0	0.0024	0.0024	83
71	35	2.25	0.25	0.0	0.0	4.0759	6.6182	29
72	36	2.75	0.25	0.0	0.0	6.9894	11.5460	14
73	37	0.50	0.0	0.0	0.0	0.0000	0.0000	86
74	38	0.75	0.0	0.0	0.0	0.0020	0.0020	84
75	39	1.00	0.0	0.0	0.0	0.0485	0.0488	77
76	40	1.25	0.0	0.0	0.0	0.3045	0.3274	64
77	41	1.50	0.0	0.0	0.0	0.9841	1.2242	53
78	42	1.75	0.0	0.0	0.0	1.9600	2.8280	43
79	43	2.00	0.0	0.0	0.0	2.9612	4.6863	36
80	44	2.25	0.0	0.0	0.0	4.3005	6.9251	27
81	45	2.50	0.0	0.0	0.0	6.0169	9.4499	20
82	46	2.75	0.0	0.0	0.0	7.7093	11.9529	12
83	47	3.00	0.0	0.0	0.0	9.2792	15.1251	6
84	48	3.25	0.0	0.0	0.0	10.3188	18.1665	3
85	49	3.50	0.0	0.0	0.0	10.5621	19.4071	1
86	50	3.50	-0.05	0.0	0.0	10.6596	19.3481	2

REFERENCES

Pierce, T. E., and D. B. Turner, 1980: User's Guide for MPTER: A Multiple Point Gaussian Dispersion Algorithm with Optional Terrain Adjustment. EPA-600/8-80-016, U.S. E.P.A., Research Triangle Park, N.C., 247pp.

Rao, K. S., 1981: Analytical Solutions of a Gradient-Transfer Model for Plume Deposition and Sedimentation. EPA-_____, U.S. E.P.A., Research Triangle Park, N.C., 75 pp.; ATDL Contribution File No. 81/14, NOAA-ATDL, P.O. Box E, Oak Ridge, TN.

APPENDIX

DIFFUSION ALGORITHMS IN MPTER-DS MODEL WITH SETTLING AND DEPOSITION EFFECTS

The analytical expressions for atmospheric concentration of a gaseous or suspended particulate pollutant, subject to deposition and/or gravitational settling, in a plume released from an elevated continuous point source are given by Rao (1981). These solutions are based on a gradient-transfer (K-theory) model. Details of the model and the solutions can be found in that reference. Here we only list the plume diffusion-deposition algorithms applicable to the MPTER-DS model under various stability and mixing conditions. Before using these new algorithms, the user must read the Appendix titled "Point Source Computations" in the User's Guide for MPTER (Pierce and Turner, 1980, p. 146).

The expressions to be used in the discussions that follow are

$$g_1 = \exp(-\hat{y}^2) \tag{A-1}$$

$$g_2' = \exp\{-2\hat{W}(\hat{z} - \hat{H})\,\hat{x} - \hat{W}^2\,\hat{x}^2\}. \left[\exp\{-(\hat{z} - \hat{H})^2\} + \exp\{-(\hat{z} + \hat{H})^2\}. \left(1-4\sqrt{\pi}\,\hat{V}_1\,\hat{x}\,e^{\xi^2}\,\mathrm{erfc}\,\xi\right)\right] \tag{A-2}$$

$$g_3' = \sum_{N=-\infty}^{\infty} \Bigg[\exp\{-2\hat{W}\,(\hat{z} - \hat{H}_1)\,\hat{x} - \hat{W}^2\,\hat{x}^2\}. \Big[\exp\{-(\hat{z} - \hat{H}_1)^2\} + \exp\{-(\hat{z} + \hat{H}_1)^2\}. \Big(1 - 4\sqrt{\pi}\,\hat{V}_1\,\hat{x}\,e^{\xi_1^2}\,\mathrm{erfc}\,\xi_1\Big)\Big]\Bigg] \tag{A-3}$$

<u>For $\hat{V}_2 = 0$,</u>

$$g_4' = (1 + 2\,\hat{x}_1{}^2)\,\mathrm{erfc}\,\hat{x}_1 - (2\hat{x}_1/\sqrt{\pi})\,\exp(-\hat{x}_1{}^2) \tag{A-4}$$

<u>For $\hat{V}_2 \neq 0$,</u>

$$g_4' = (\hat{V}_1/\hat{V}_2) \cdot \exp(4\hat{V}_d\hat{V}_2\hat{x}^2)\,\mathrm{erfc}(2\hat{V}_1\hat{x}) - (\hat{W}/2\hat{V}_2) \cdot \mathrm{erfc}(\hat{W}\,\hat{x}) \tag{A-5}$$

In the above, g_2', g_3', and g_4' are the modifications of the nondimensional functions g_2, g_3, and g_4 defined in the User's Guide for MPTER (Pierce and Turner, 1980, p. 148). The capped quantities denote the nondimensionalized variables defined below:

$$\begin{aligned}
\hat{H} &= H/\sqrt{2}\,\sigma_z & \hat{H}_1 &= H_1/\sqrt{2}\,\sigma_z \\
\hat{L} &= L/\sqrt{2}\,\sigma_z & \hat{V}_d &= V_d/U \\
\hat{V}_1 &= \hat{V}_d - \hat{W}/2 & \hat{V}_2 &= \hat{V}_d - \hat{W} \\
\hat{W} &= W/U & \hat{x} &= x/\sqrt{2}\,\sigma_z \\
\hat{y} &= y/\sqrt{2}\,\sigma_y & \hat{z} &= z/\sqrt{2}\,\sigma_z \\
\xi &= \hat{z} + \hat{H} + 2\,\hat{V}_1\,\hat{x} \\
\xi_1 &= \hat{z} + \hat{H}_1 + 2\,\hat{V}_1\,\hat{x}
\end{aligned} \tag{A-6}$$

where

H = effective height of source emission

H_1 = $H + 2\ N\ L$

L = mixing depth or height of inversion lid

N = eddy reflection number

U = mean wind speed

V_d = dry deposition velocity of pollutant

W = gravitational settling velocity of pollutant particles

x = horizontal upwind distance of source from receptor

y,z = horizontal crosswind and vertical coordinates of receptor

σ_y,σ_z = Gaussian plume dispersion parameters in y and z directions

In the limit of $\hat{W} = \hat{V}_d = 0$, the expressions for g_2', g_3', and g_4' reduce to the expressions for g_2, g_3, and g_4 given by Pierce and Turner (1980). Though g_4 was not explicitly defined in that reference, it can be easily seen that $g_4 = 1$.

POINT SOURCE

Depending on the atmospheric stability and mixing conditions, the contribution to the receptor concentration, χ_p, due to single point source is given by one of the following equations.

For stable conditions or unlimited mixing,

$$\chi_p = \frac{Q}{U} \cdot \frac{g_1}{L_y} \cdot \frac{g_2'}{L_z} \qquad \text{(A-7)}$$

For unstable or neutral conditions, with $\sigma_z < 1.6\ L$,

$$\chi_p = \frac{Q}{U} \cdot \frac{g_1}{L_y} \cdot \frac{g_3'}{L_z} \qquad \text{(A-8)}$$

For unstable or neutral conditions, with uniform vertical mixing ($\sigma_z \geqq 1.6L$),

$$\chi_p = \frac{Q}{U} \cdot \frac{g_1}{L_y} \cdot \frac{g_4'}{L} \qquad \text{(A-9)}$$

In the above,

$$L_y = \sqrt{2\pi}\ \sigma_y\ , \quad . \quad L_z = \sqrt{2\pi}\ \sigma_z, \qquad \text{(A-10)}$$

L is the mixing depth and Q is the point source emission rate; σ_y and σ_z are evaluated for the given distance x and the atmospheric stability class.

SURFACE DEPOSITION FLUX

The surface deposition flux D is calculated directly from the ground-level concentration as

$$D(x,y) = V_d \cdot \chi_p(x,y,0) \qquad \text{(A-11)}$$

This is the amount of pollutant deposited per unit time per unit surface area. D is usually expressed as kg/km^2-hour. In the MPTER-DS program, the deposition flux is calculated only at ground-level receptors; these are defined as the receptors which are not higher than 1 meter above local ground-level elevation.

SETTLING AND DEPOSITION VELOCITIES

The settling and deposition velocities depend on the particle diameter d. In the trivial case of $W = V_d = 0$, settling and deposition effects are negligible. For very small particles ($d < 0.1$ μm), gravitational settling can be neglected, and dry deposition occurs primarily due to nongravitational effects. In this case, $W = 0$ but $V_d > 0$. For small particles ($d = 0.1$~50 μm), $0 < W < V_d$; deposition is enhanced here beyond that due to gravitational settling, primarily due to increased turbulent transfer resulting from surface roughness. For larger particles ($d > 50$ μm), it is generally assumed that $V_d = W > 0$, since gravitational settling is the dominant deposition mechanism. When $W > V_d > 0$, reentrainment of the deposited particles from the surface back into the atmosphere is implied, as in a dust storm, for example. The first four types of model parameters given above are widely used in atmospheric dispersion and deposition of particulate material. The deposition of gases is a special case of the particulate problem with $W = 0$. Thus, one has to carefully select the values of W and V_d for use in the models. A more complete discussion of these model parameters is given by Rao (1981).

REFERENCES

Pierce, T. E., and D. B. Turner, 1980: User's Guide for MPTER: A Multiple Point Gaussian Dispersion Algorithm with Optional Terrain Adjustment. EPA-600/8-80-016, U.S. E.P.A., Research Triangle Park, N.C., 247 pp.

Rao, K. S., 1981: Analytical Solutions of a Gradient-Transfer Model for Plume Deposition and Sedimentation. EPA-_____, U.S. E.P.A., Research Triangle Park, N.C., 75 pp.; ATDL Contribution File No. 81/14, NOAA-ATDL, P.O. Box-E, Oak Ridge, TN.

TECHNICAL REPORT DATA
(Please read Instructions on the reverse before completing)

1 REPORT NO	2	3. RECIPIENT'S ACCESSION NO.
4 TITLE AND SUBTITLE MPTER-DS THE MPTER MODEL INCLUDING DEPOSITON AND SEDIMENTATION User's Guide		5. REPORT DATE
		6. PERFORMING ORGANIZATION CODE
7 AUTHOR(S) K. Shankar Rao and Lynne Satterfield		8. PERFORMING ORGANIZATION REPORT NO.
9 PERFORMING ORGANIZATION NAME AND ADDRESS ATMOSPHERIC TURBULENCE AND DIFFUSION LABORATORY NATIONAL OCEANIC AND ATMOSPHERIC ADMINISTRATION OAK RIDGE, TN 37830		10. PROGRAM ELEMENT NO. CCUL1A-03 0505 (FY-82)
		11. CONTRACT/GRANT NO.
12 SPONSORING AGENCY NAME AND ADDRESS ENVIRONMENTAL SCIENCES RESEARCH LABORATORY - RTP, NC OFFICE OF RESEARCH AND DEVELOPMENT U.S. ENVIRONMENTAL PROTECTION AGENCY RESEARCH TRIANGLE PARK, NC 27711		13. TYPE OF REPORT AND PERIOD COVERED 8/80 - 2/82
		14. SPONSORING AGENCY CODE EPA/600/09

15. SUPPLEMENTARY NOTES

16. ABSTRACT

MPTER is the designation for a multiple point source air quality model with terrain adjustments. The diffusion algorithm is based upon Gaussian plume modeling assumptions. The MPTER model is available ffrom the U.S. Environmental Protection Agency and can be used for estimating air pollutant concentrations from multiple sources in rural environments. The model has technical input options for terrain adjustment, stack downwash, gradual plume rise, and buoyancy-induced dispersion, and a great variety of output options.

This report is a supplementary User's Guide to a modified version of MPTER, MPTER-DS, which can explicitly account for dry deposition of gaseous and suspended particulate pollutants in the plume. The MPTER-DS model utilizes the Gaussian plume-type diffusion-deposition algorithms based on analytical solutions of a gradient-transfer model.

17. KEY WORDS AND DOCUMENT ANALYSIS

a. DESCRIPTORS	b. IDENTIFIERS/OPEN ENDED TERMS	c. COSATI Field/Group

18 DISTRIBUTION STATEMENT RELEASE TO PUBLIC	19 SECURITY CLASS *(This Report)* UNCLASSIFIED	21 NO. OF PAGES 85
	20 SECURITY CLASS *(This page)* UNCLASSIFIED	22. PRICE

EPA Form 2220-1 (9-73)