ENVIRONMENTAL PROTECTION AGENCY
OFFICE OF ENFORCEMENT
EPA-330/2-75-004

Boiler Stack Emission Monitoring

Honokaa Sugar Company

Haina, Hawaii, Hawaii

NATIONAL ENFORCEMENT INVESTIGATIONS CENTER
DENVER, COLORADO

JULY 1975

ENVIRONMENTAL PROTECTION AGENCY
OFFICE OF ENFORCEMENT

BOILER STACK EMISSION MONITORING

HONOKAA SUGAR COMPANY

HAINA, HAWAII, HAWAII

NATIONAL ENFORCEMENT INVESTIGATIONS CENTER
DENVER, COLORADO

JULY 1975

CONTENTS

INTRODUCTION. 1

SUMMARY AND CONCLUSIONS. 2

POWER BOILER OPERATIONS AND EMISSION CONTROL EQUIPMENT. 3

Power Boiler. 3

Steam Distribution System. 4

Air Pollution Control Equipment. 5

DISCUSSION OF STUDY

Stack Monitoring. 6

Visible Emission Evaluation. 11

REFERENCES 12

APPENDICES

A Processing of Sugar Cane

B Steam Piping System and Boiler Operating Data
Honokaa Sugar Company

C Stack Monitoring Procedures

D Analytical Procedures for Stack Monitoring Samples

E Visible Emissions Evaluation, Honokaa Sugar Company Mill
May 25-26, 1975

TABLES

I SUMMARY OF STACK MONITORING RESULTS. 8
HONOKAA SUGAR COMPANY, MAY 25-26, 1975

II SUMMARY OF BOILER OPERATING DATA. 9
HONOKAA SUGAR COMPANY, MAY 25-26, 1975

FIGURE

1 HONOKAA BOILER STACK. 7

INTRODUCTION

The Honokaa Sugar Company mill is located about 64 km (40 miles) northwest of Hilo, Hawaii. This mill presently has a rated capacity of 2725 kkg* (3000 tons)/day net cane** and generally operates 24 hours/day 7 days/week. During the period May 24-27 (3 p.m.-3 p.m. operating day), the Honokaa mill processed an average of 2428 kkg (2675 tons) net cane/day. The range was 2244-2580 kkg (2471-2841 tons) net cane/day.

Cane processing to raw sugar and molasses generally follows the flow chart contained in Appendix A. As is typical at most sugar mills in the Hawaiian Islands, the bagasse*** is used as the primary fuel source for the boilers. The bagasse available for fuel is about 30 percent of the net cane processed. Company officials indicated that about 95 percent of the available bagasse is burned with the remainder being wasted.

At the request of Region IX EPA, the National Enforcement Investigations Center (NEIC) conducted stack monitoring and visible emissions observations on May 25 and 26 to determine if applicable state air pollution regulations were being met. The allowable particulate emission rate is 0.4 kg/100 kg (0.4 lb/100 lb) of bagasse burned. For visible emissions from existing sources, the regulations state:[1]

> "No person shall cause or permit the emission of visible air pollutants of a shade or density equal to or darker than that designated as No. 2 on the Ringelmann Chart or 40 percent opacity, except" that "A person may discharge into the atmosphere from any single source of emission, for a period or periods aggregating not more than 3 minutes in any 60 minutes, air pollutants of a shade or density not darker than No. 3 on the Ringelmann Chart or 60 percent opacity when building a new fire or when breakdown of equipment occurs."

Information on process and boiler operations and air pollution control practices was obtained from Mr. Cyril Rowsell, Factory Superintendent and Mr. Jean-Paul Merle, Boiling House Superintendent. Mr. Harold Tobin, Air Pollution Engineer of the Hawaii Department of Health, observed the tests.

---

*Metric tons.

**Net cane is a calculated value and is essentially equal to the gross cane brought into the plant minus the soil, leaves, rock, and other trash.

***Bagasse is the solid material remaining after the milling process has removed the juice from the sugar cane. It serves as an excellent fuel source with a heating value of 2580 gram-cal./gm (4650 BTU/lb).

SUMMARY AND CONCLUSIONS

1. Stack monitoring was conducted at the Honokaa Sugar Company mill May 25-26 to determine the particulate emissions from the bagasse-fired boiler stack. Sampling was conducted as specified in Method 5 of the Standards of Performance for New Stationary Sources. State of Hawaii regulations require that the particulate emissions from this source not exceed 0.4 kg/100 kg (0.4 lb/100 lb) of bagasse burned. The average particulate load emitted by the Honokaa Sugar Company was 0.53 kg/100 kg (0.53 lb/100 lb) of bagasse burned. This load is 33 percent higher than that allowed.

2. Visible emission observations were conducted as specified in Method 9 of the Standards of Performance for New Stationary Sources. Forty observations at 15 second intervals were made during each particulate sampling test. At the time of the observations the plant was operating normally; thus the results were checked against that portion of the regulations which specifies that the plume opacity shall not be equal to or greater than 40 percent. The average opacities for the three observation periods ranged from 49-52 percent. Individual opacities as high as 90 percent were observed. The results clearly show violations of the state regulations.

3. A visible emission evaluation by NEIC on May 1 showed an average plume opacity of 27 percent. Between May 1 and May 25, the company installed a 6000 kw generator which was operating at 1700 kw. When operating at full capacity, the power generated beyond factory demand will go to the Hilo Electric Light Company. However, at the time of stack testing, connection to the power company lines had not been made.

   The effects on boiler operation due to operating the 6000 kw generator at a much reduced capacity is not clearly defined but there has been a significant change in visible emissio between May 1 and May 25. At present there are wide fluctuations in the steam production rates. Operating the 6000 kw generator at full capacity may provide for more uniform boiler operation which in turn may help control the visible and particulate emissions.

4. The company has not complied with the Hawaii Department of Health Compliance Order issued July 27, 1973 in that the fractionating dust collector has not been installed. Present air pollution control equipment consists of a multiple cyclone dust collector unit [Western Precipitation Corporation multiclone unit]. The unit was, according to company officials, retrofitted to the Honokaa boiler. No attempt was made to determine the collection efficiency of the multiple cyclone unit during the survey.

POWER BOILER OPERATIONS AND EMISSION CONTROL EQUIPMENT

The Honokaa mill requires both steam and electric power to operate the various mechanical equipment trains and the evaporative processes in the plant. Steam generated in the bagasse-fired steam boiler is used to generate electric power, to drive a portion of the mechanical equipment, and in the sugar evaporation and concentration processes.

The electrical power requirement for the mill is approximately 1700 kw. The majority of the electrical power is supplied by two steam powered turbine generators, one rated at 6,000 kw and the other at 1,500 kw. A 1,000 kw hydrogenerator is also available. This hydrogenerator is powered by runoff water which is available at approximately 240 m (800 ft) of static head. The hydrogenerator supplies approximately 400 kw.

By late summer 1975, the company anticipates completion of an electrical tie-in between their power generation facilities and the Hilo Electric Light Company power distribution lines. A contract has been confirmed with the latter by which the mill will supply 800,000 kw per month to the distribution system. When this tie-in is completed, the 6,000 kw steam turbine generator will probably be operated near capacity. Currently this unit is operated at approximately 1,700 kw.

POWER BOILER

The steam boiler is a Combustion Engineering two-drum water tube and water wall unit. The boiler was built in 1954 and was originally designed to be operated on pulverized coal and/or natural gas. In its original configuration the boiler had a capacity of 73,000 kg (160,000 lb)/hour of steam at a delivery pressure of 29 kg/cm^2 (425 psi).

In 1964 the boiler was installed at the Honokaa Sugar Company and modified to burn bagasse as a primary fuel, with Bunker C fuel oil being used as supplemental fuel. In 1974 it was further modified by the Babcock and Wilcox Company to increase its capacity to 73,000 kg (160,000 lb)/hr of 45 kg/cm^2 (650 psi) steam.

Bagasse from the milling process train is conveyed by belt to four feed chutes at the power boiler. The weight of bagasse is determined by a gamma ray sensor type weighing scale located on the conveyor belt. The bagasse continually discharges into the four chutes keeping these filled at all times.

The excess bagasse continues on the conveyor and is currently discharged to the trash cleaning system with the majority going to landfill along with the cane trash. The company is in the process of installing a

piping system to convey the bagasse pneumatically to the landfill area. Excess bagasse can also be diverted to storage if necessary. Moreover, during periods when bagasse production from the milling process is not sufficient to supply the boiler fuel demand, bagasse can be withdrawn from storage.

The bagasse is fed into the boiler furnace by four spreader stokers, one located at the bottom of each chute. The stokers propel the bagasse into the furnace by rotating flipper arms. Approximately 50 percent of the bagasse burns in suspension in the furnace with the remainder burning on the furnace grates. The amount of bagasse introduced into the furnace depends on the flipper arm speed. In turn, the speed of the arms is controlled by the boiler steam demand rate; i.e., as the demand for steam increases, the bagasse introduced into the boiler increases.

Ash residue is removed from the furnace by dumping grates. There are four such dumping grates in this furnace. One grate is dumped about every hour. When a grate is dumped, the underfire air is shut off, the unit rotated and the ashes dumped pneumatically into a collection hopper. The ashes are steam ejected from the hopper into an open trench below and then sluiced along with the excess bagasse to the wastewater outfall.

Three manually operated atomized oil burners are located on the front wall of the furnace unit. During 1974, 1,475 bbls of Bunker C fuel oil were burned. The majority of this fuel oil was used during season startup and shutdown. Fuel oil is also used during the normal operating periods when the steam demand exceeds that available by burning bagasse only. This occurs when the bagasse is extremely dirty or when the bagasse feed systems are affected by mechanical problems.

STEAM DISTRIBUTION SYSTEM

A schematic drawing of the boiler power plant steam piping system and an operational narrative, are included in Appendix B. A brief description follows.

The boiler produces superheated steam at 42 kg/cm^2 (610 psi) and 425°C (800°F). Under current (May 1975) operating modes, the pressure and temperature of a portion of this superheated steam is dropped to 42 kg/cm^2 (600 psi) and 400°C (750°F). This latter steam is used to operate the 6,000 kw steam turbine unit. The 6,000 kw turbine has a back pressure exhaust of 16.5 kg/cm^2 (235 psi) steam. This steam exhaust temperature is further dropped to 225°C (455°F) and discharged into the 16.5 kg/cm^2 (235 psi) header system. Steam from this system powers the mill train, another steam turbine generator unit, and after further pressure reduction is used for other purposes within the plant.

The new 6,000 kw steam turbine generator is not currently operated at full capacity, thus the supply of 16.5 kg/cm^2 (235 psi) exhaust steam does not meet the needs of the plant. Upon completion of the electrical tie-in to the Hilo Electric Company, it is anticipated that this unit will be operated at full capacity and the exhaust supply will be adequate for plant needs. However, in the interim period a portion of the 42 kg/cm^2 (610 psi) superheated steam from the boiler is run through a pressure reducing station and desuperheated to provide 16.5 kg/cm^2 (235 psi), 225°C (435°F) steam. This steam is then introduced into the 16.5 kg/cm^2 (235 psi) header system described above.

The 16.5 kg/cm^2 (235 psi) steam is used at this pressure or further reduced to satisfy various equipment requirements. The majority of the equipment exhausts at 1 kg/cm^2 (15 psi) steam which is collected in an exhaust header main and used in the sugar evaporation and concentration processes.

AIR POLLUTION CONTROL EQUIPMENT

Particulate emissions from the bagasse-fired boiler originate from unburned bagasse, ash, and soot which are entrained in the combustion gases. Combustion air is supplied to the furnace by a forced draft fan (FD) which draws in ambient air and forces it through an air preheater unit. From the air preheater unit the warm air is introduced into the furnace, both below the ash grates and through overfire air ports. The air supports the combustion of the bagasse both on the grates and in suspension. The combustion gases are then drawn by an induced draft (ID) fan up through the steam superheater and boiler tubes, and exited through the upper rear portion of the boiler. These exhaust gases then pass through the air preheater unit, a cyclone dust collector, the ID fan and are exhausted to the atmosphere through a 2.1 m (6'10") diameter, 12.2 m (40 ft) high steel stack.

The cyclone type dust collector is a Western Precipitation multiclone unit, Type 9VGRAB-14, Model P-94348-B, size 200-10. The unit has 200 individual cyclone units and is rated at 171,000 kg/hr (376,000 lb/hr) of exhaust gas. This figure translates to approximately 4,700 actual m^3/min (166,000 acfm) of exhaust gases. According to company officials the multiple cyclone unit which was retrofitted to the boiler was installed in 1972.

Ashes collected in the multiclone unit fall into hoppers below and are sluiced from here along with excess bagasse to the trash dewatering system and thence into the effluent channel.

DISCUSSION OF STUDY

STACK MONITORING

Stack monitoring, as previously mentioned, was conducted on May 25 and 26, 1975. The equipment used, the testing, calibration, and the sample handling procedures followed are discussed in Appendix C.

The boiler stack at the Honokaa Mill is 2.08 m (6.83 ft) in diameter. The sample ports are located approximately 8.25 m (27 ft) above the exhaust gases inlet to the stack and 4.27 m (14 ft) below the stack top [Figure 1]. The company had recently installed four ports located at 90 degree intervals on the stack circumference. Because a 3.05 m (10 ft) probe was used, sampling was accomplished through the north and east ports. Sampling was accomplished in accordance with the Federal Regulations (Method 1)[2] which dictate the number of sampling points necessary based on port location. In this case the ports are slightly more than four diameters downstream from a disturbance (i.e., the point where exhaust gases enter) and two diameters upstream from the exit; thus 36 points were required.

Each point was sampled three minutes in order that 1.7-2.1 m^3 (60-75 ft^3) of air could be sampled during a test. The heavy particulate load required two filters per test. Three tests, one on May 25, and two on May 26 were conducted. Isokineticity ranged from 97.7-102.4 percent* [Table I].

Samples were recovered as specified for Method 5[2] [Appendix C]. The samples were shipped to the NEIC laboratory in Denver for analyses [Appendix D]. The NEIC Chain of Custody procedures were followed.

During the stack monitoring NEIC personnel observed boiler operating procedures in the control room. Pertinent operating readings were obtained every ten minutes from the boiler instrumentation panels. These data included the steam production rate, bagasse production rate, superheater steam pressure and temperature, feed water pressure and temperature, and feed water flow rate [Appendix B]. The average steam production rates [Table II] during monitoring ranged from about 75-88 percent of the boiler capacity of 72,600 kg (160,000 lb)/hr. The steam production rates during any one monitoring test differed by as much as 14,980 kg (33,000 lb)/hr [Appendix B]. These varying steam demand rates result from changes in processing operation, e.g., the boiler house steam demand drop when a vacuum pan is pulled. Stack monitoring was stopped on one occasion during test 3 when a breakdown in the mill reduced the steam demand to 46,760 kg (103,000 lb)/hr. When repairs were completed and the steam production rate increased to 54,400 kg (120,000 lbs)/hr, sampling continued.

*Isokinetic sampling can be defined as sampling in a manner so that the sampling velocity (Vn) is equal to the stack velocity (Vs). If Vn < Vs i.e., percent less than 100, sampling is under isokinetic; if Vn > Vs sampling is over isokinetic. For a valid test sampling must be in the range 90 to 110 percent.

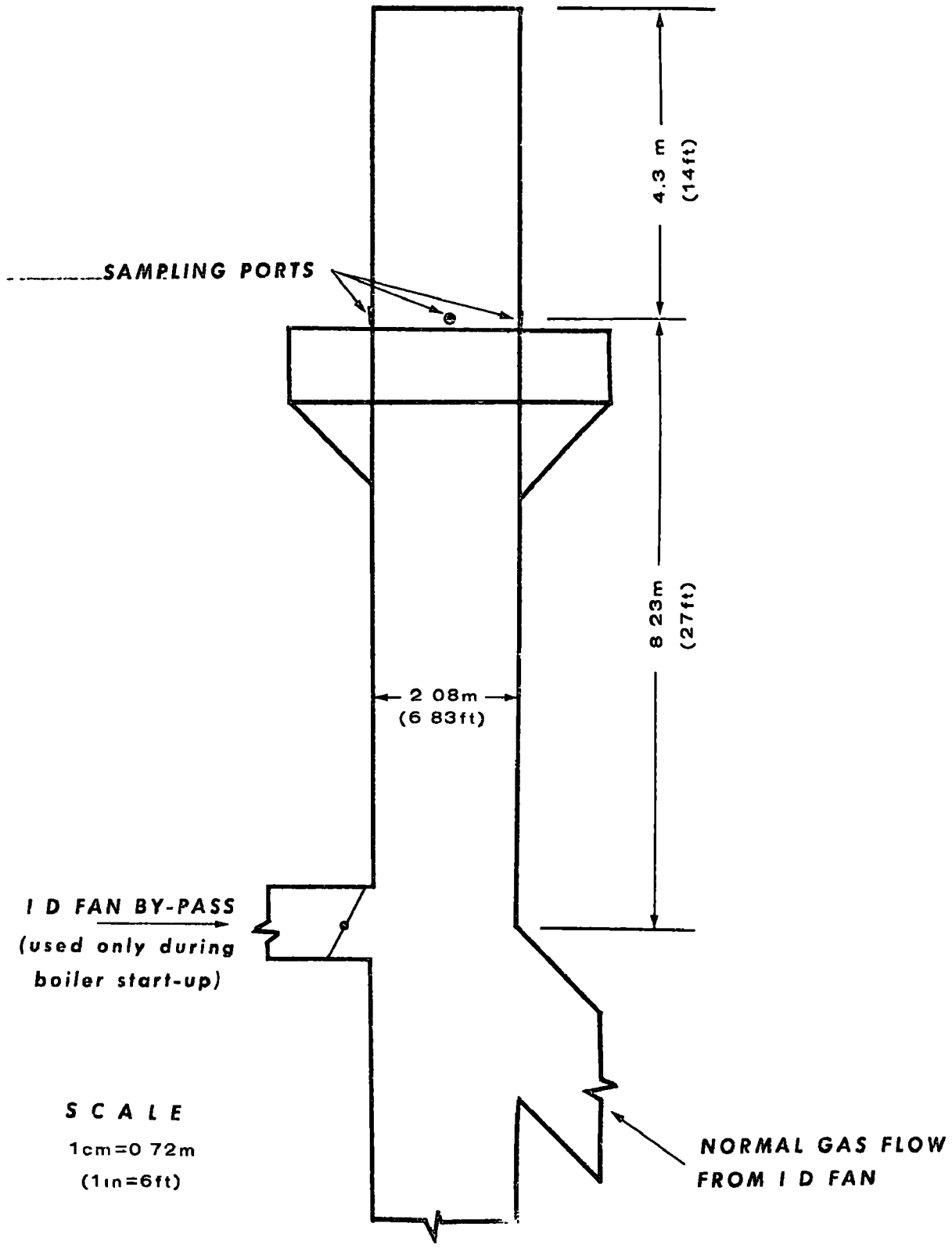

Figure 1. HonaKaa Boiler Stack

TABLE I

SUMMARY OF STACK MONITORING RESULTS
HONOKAA SUGAR COMPANY
MAY 25-26, 1975

	Test 1	Test 2	Test 3
Volume Metered			
liters	1853	1931	1954
(SCF)1/	(65.45)	(68.19)	(69.01)
Average Stack Temperature, °R	987	989	967
Molecular Weight	27.1	27.3	27.6
Percent Moisture	23.4	20.9	19.6
Stack Gas Velocity			
M/Sec	23.9	24.0	22.7
Ft/Sec	(78.5)	(78.7)	(74.4)
Stack Gas Volume (Actual)			
M^3/Min	4,900	4,888	4,633
(Ft^3/Min)	(173,000)	(172,600)	(163,600)
Percent Isokinetic	97.7	98.7	102.4
Particulate Collection2/			
Front Half - gm	2.54	2.41	2.23
Back Half - gm	0.57	0.48	0.50
Total - gm	3.11	2.89	2.74
Bagasse Fired			
Kg/hr	31,300	27,900	25,700
(lb/hr)	(69,000)	(61,600)	(56,600)
Emission Rate			
Front Half Collection			
Kg/100 Kg Bagasse	0.52	0.55	0.53
(Lb/100 lb Bagasse)	(0.52)	(0.55)	(0.53)
Total Collection			
Kg/100 Kg Bagasse	0.64	0.66	0.65
(Lb/100 lb Bagasse)	(0.64)	(0.66)	(0.65)

1/ SCF - Standard Cubic Feet

2/ Front half collection - Particulates contained on the filter, in the cyclone, and in the sampling probe and nozzle.

Back half collection - The particulate material collected in the Impinger case is in a gaseous form at 120°C (248°F) but condenses at lower temperatures. This back half material is not at present considered as part of the stack emissions for new stationary sources.

TABLE II

SUMMARY OF BOILER OPERATING DATA
HONOKAA SUGAR COMPANY
MAY 25-26, 1975

		NEIC Observations		Company Supplied Data			
No.	Date and Time	Steam Production kg (lb)/hr	Bagasse Production kkg (tons)/hr	Steam Production kg (lb)/hr	Bagasse Fuel Used kkg (tons)/hr	Bagasse Moisture Content	kg(lb) Steam /kg(lb) bagass.
1	5/25/75 (1000 to 1300 hrs)	64,400 (142,000)	30.0 (33.1)	63,500 (140,000)	31.3 (34.5)	49.3	2.03
2	5/26/75 (0800 to 1100 hrs)	61,700 (136,000)	29.4 (32.4)	61,200 (135,000)	27.9 (30.8)	48.0	2.19
3	5/26/75 (1400 to 1700 hrs)	54,000 (119,000)	27.8 (30.6)	54,400 (120,000)	25.7 (28.3)	49.3	2.12

During monitoring, personnel from the Honokaa Sugar Company were obtaining samples of the bagasse produced and the raw cane processed. From these samples the moisture content of the bagasse produced, and the percentage of bagasse fiber in the raw cane were calculated. The company routinely measures the amount of sugar produced over a given time. Knowing this figure, the cane-to-sugar ratio, and the cane-to-bagasse ration, the company then extrapolates the amount of bagasse produced per hour of operation.

The NEIC requested and obtained certification of certain production and boiler operating parameters for the test periods [Appendix B]. These certified data compare favorably with the numbers collected during NEIC observations. The bagasse usage figures provided by the company were used to calculate the particulate emission, i.e., kg/100 kg (lb/100 lb) of bagasse burned.

To ascertain the particulate emissions the amount of material collected on the filter and in the cyclone along with any material contained in the sampling probe and nozzle, i.e., the "front half" of the sampling train were measured [Table I]. The results show that the average particulate emission for three tests was 0.53 kg/100 kg (0.53 lb/100 lb) of bagasse burned. This violates the state regulations which specify the particulate emissions shall not exceed 0.4 kg/100 kg (0.4 lb/100 lb) of bagasse burned.

The "back-half" collection represents the particulate material collected in the impinger case and is that material existing in a gaseous state at 120°C (248°F) but condensing at lower temperatures. This material is not presently considered in determining particulate emissions. It is presented herein for information purposes only [Table I].

It should be noted that the company estimates that about five percent of the total bagasse production is wasted in the current operating modes, hence the amount of bagasse certified as being used as fuel is generally lower than the numbers monitored by the gamma weight scale in the cane mill. As mentioned previously the present air pollution control equipment consists of a multiple cyclone unit which, according to company officials, was retrofitted to the Honokaa boiler. The collection efficiency of these units depends on numerous factors such as dust particle size, particle density, inlet gas velocity, cyclone body length, cyclone diameter, smoothness of cyclone walls, gas viscosity, and gas outlet and inlet diameters. No attempt was made to determine the collection efficiency of this particular unit during the survey.

The complete field data and analytical results are on file at NEIC and are available upon request.

VISIBLE EMISSION EVALUATION

Visible emission evaluations were conducted as specified in the Federal Regulations (Method 9)[2]. Forty observations taken at 15 second intervals were made for a ten minute period during each particulate sampling test. At the observation times the plant was operating normally; thus the results were checked against that portion of the regulations that specifies the plume opacity shall not equal or exceed 40 percent opacity. The average opacities during tests 1, 2, and 3 respectively were 52, 51, and 49 percent. Opacity reading ranged as follows: Test 1, 40-70 percent; Test 2, 40-90 percent; and Test 3, 35-90 percent [Appendix E]. The average opacities as well as most of the individual observations violated the aforementioned state regulations.

A SIP inspection was conducted by NEIC personnel May 1, 1975. Visible emission observations at that time showed an average plume opacity of 27 percent[3]. Between May 1 and May 24 the company placed a 6,000 kw steam turbine generator on line. When operating at full capacity the power beyond factory demand (approximately 1,700 kw) will go to the Hilo Electric Light Company. However, at the time of stack testing, the tie-in to the electric company transmission lines had not been completed; thus the generator was operating at about 1,700 kw.

The effects on boiler operation because of the reduced generator operating rate are not clearly defined but there has been a significant change in the visible emissions from those observations made May 1 and those made during stack testing. At present there are wide variations in steam demand. Operating the boiler at a more constant steam production rate may reduce the visible and particulate emissions.

This mill was issued a compliance order by the Hawaii Department of Health on July 27, 1973 regarding its bagasse-fired boiler. The order found the company in violation of the particulate and opacity regulations and required the following approach to attain compliance:

1. By January 30, 1974, install an over-fire air system on the boiler.

2. By January 30, 1975, install a fractionating dust collector (attendant to the existing multiclone unit).

3. By May 31, 1975, achieve compliance.

The company attained compliance with item 1 but has not installed the dust collector and as the study results show has not achieved compliance with the opacity and particulate emission regulations.

REFERENCES

[1]Public Health Regulations, Air Pollution Control, Department of Health, State of Hawaii, Chapter 43, March 21, 1972.

[2]Standards of Performance for New Stationary Sources, Environmental Protection Agency, Federal Register, Vol. 36, No. 247, Part II, Appendix Test Methods, December 23, 1971.

[3]SIP Report "Inspection of Honokaa Sugar Company," Environmental Protection Agency, NEIC, June 30, 1975.

APPENDIX A

PROCESSING OF SUGAR CANE[1/]

The processing of sugar cane to raw sugar and molasses generally follows the steps discussed below [Figure A1].

Cane Cleaning

The replacement of hand cutting by mechanical harvesting has resulted in an increase of mud and dirt content. This has necessitated cane washing and it is the practice generally followed at mills on the Island of Hawaii at the present time.* The cane is usually washed with warm barometric condenser waters.

Milling

Following cleaning, the cane proceeds into the milling process of which the purpose is to extract the juice from the cane stock. This extraction is accomplished with revolving cane knives, shredders, crushers, and roll mills. The knives cut the cane into chips in preparation for grinding and to provide a more even feed rate to the mills. Shredders further prepare the cane. These two operations increase mill capacity. The crushers extract 40-70% of the juice. After the juice is extracted, the remaining material (bagasse) representing about 30% by weight of the cane entering the system, is usually used as feed for the boiler system with the excess being hauled to landfill or, in some cases, discharged in the wastewater.

Clarification

The juice from the milling operation contains impurities such as fine particles of bagasses, gums, and waxes. Screening will remove the courser particles which are returned to the mills. The majority of the

1/ Development Document for Interim Final Effluent Limitations Guidelines and Proposed New Source Performance Standards for the Raw Cane Sugar Processing Segment of the Sugar Processing Point Source Category, Effluent Guidelines Division, Office of Water and Hazardous Material, U.S. Environmental Protection Agency, Washington, D.C. 20460, pp 32-46.

*Hilo-Hamukua Coast of the Island of Hawaii Raw Cane Sugar Processing subcategories.

remaining impurities are removed by clarification.

In the clarification process lime, heat and a small amount of phosphate are used to aid in removing the remaining impurities. During the process a flocculent precipitate is formed and most of the suspended solids remaining in the juice are occluded and settle out with the precipitate. The precipitate is separated from the juice by settling and decantation in continuous clarifiers.

Filtration

The clarification process separates the juice into two portions: (1) the clarified juice and (2) the precipitated sludge or muds. The first portion represents 80-90% of the juice which is usually taken directly to the evaporator system. The second portion is generally thickened by rotary vacuum filters. The filtered juice is cycled back through the clarification system.

The filter cake produced (20-75 kg/kkg or 40-150 lbs/ton of cane ground) has a moisture content of 70-80 percent. It is general practice to collect the cake in storage bins for subsequent removal to the cane fields. In most cases, the filter cake is not discharged.

Evaporation

The clarified juice is about 85 percent water and 15 percent solids. To obtain crystallization, enough water must be removed to produce a 60 percent solids syrup. This concentration process is usually accomplished using multiple-effect evaporators in the interest of better fuel economy.

Crystallization

The concentrated syrup from the evaporators is placed in single effect, batch type evaporators called "vacuum pans". The pans are operated using exhaust steam or vapor from the first stage evaporators discussed above. Seed crystals are introduced into the vacuum pan at the beginning of the operation. The pan must be maintained in a narrow range of sugar concentration and temperature so that the seed crystals grow.

After sugar crystals form in the pan, the mixture of crystals and syrup (massecuite) is agitated gently in a mixer. After mixing, the crystals are separated from the syrup in a high speed centrifuge with the raw sugar going to storage.

The vacuum pans generally operate in series with each pan crystallizing a different grade of massaceuite. The last pan yields a low sugar and final (blackstrap) molasses which is usually used for animal feeds. The low grade sugar off the final pan is subsequently melted into syrup and mixed with the syrup from the evaporators.

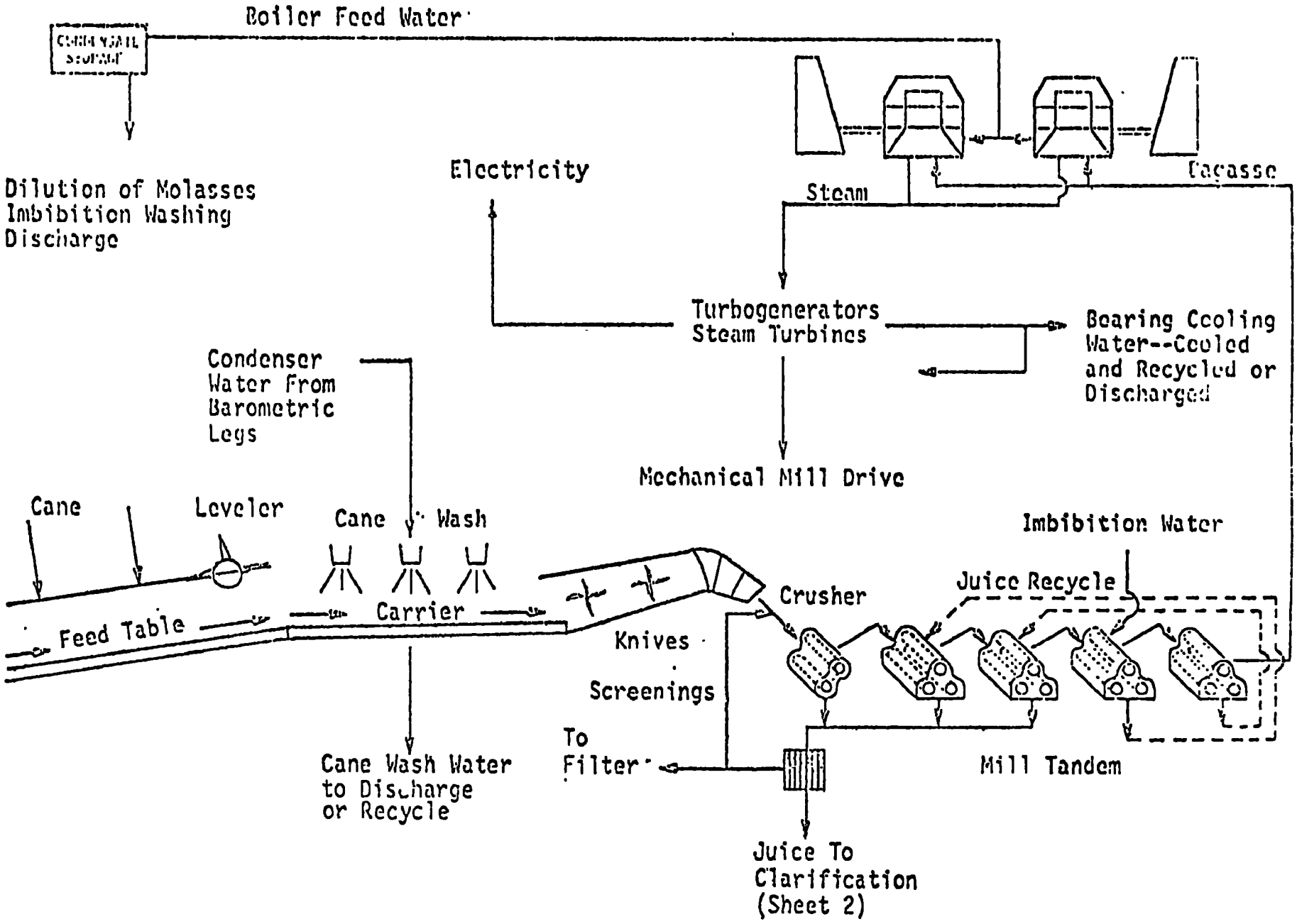

TYPICAL SUGAR FACTORY WITH CANE WASH
FIGURE A-1

Sheet 1 of 3

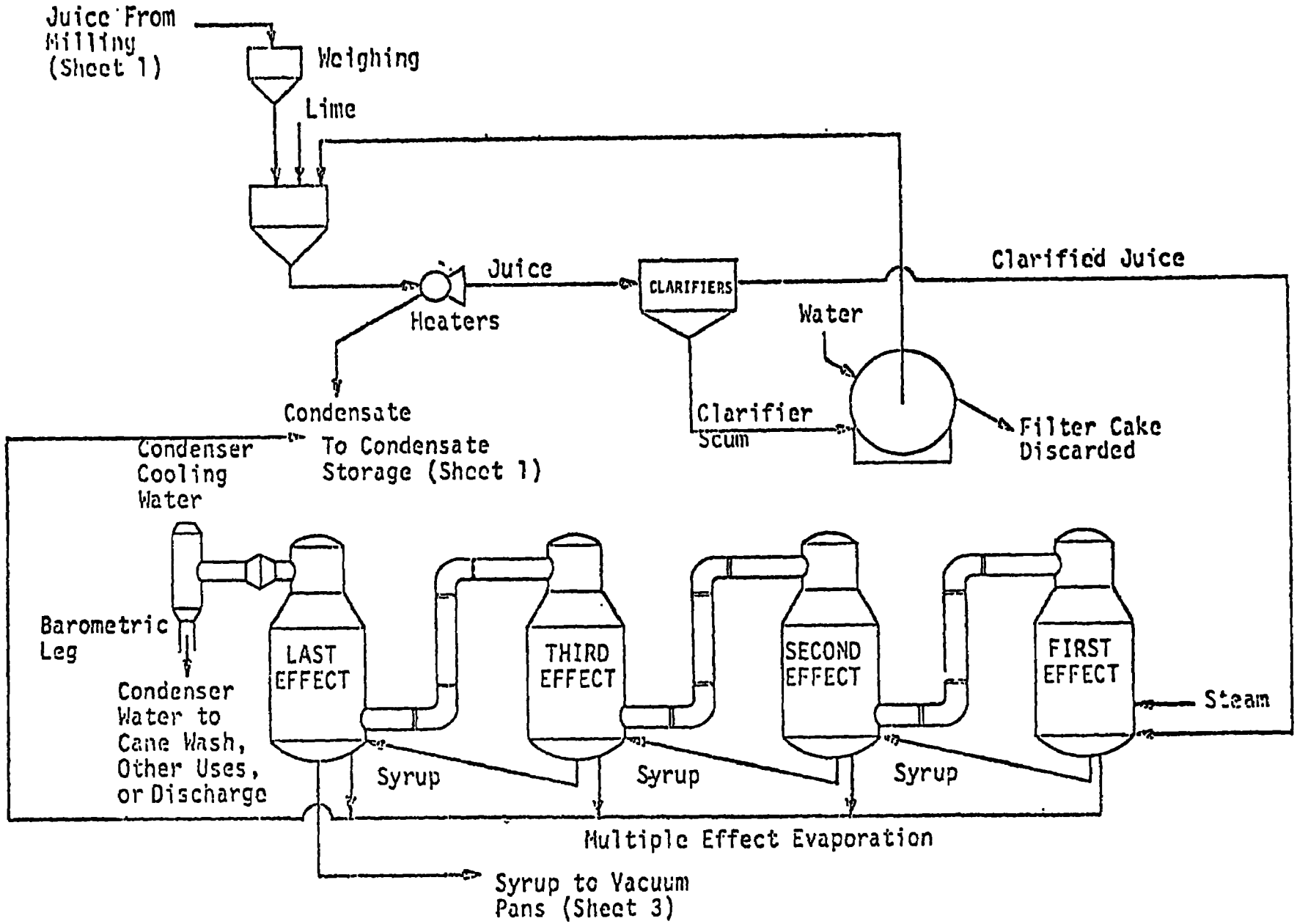

TYPICAL EVAPORATION SYSTEM
FIGURE A-1

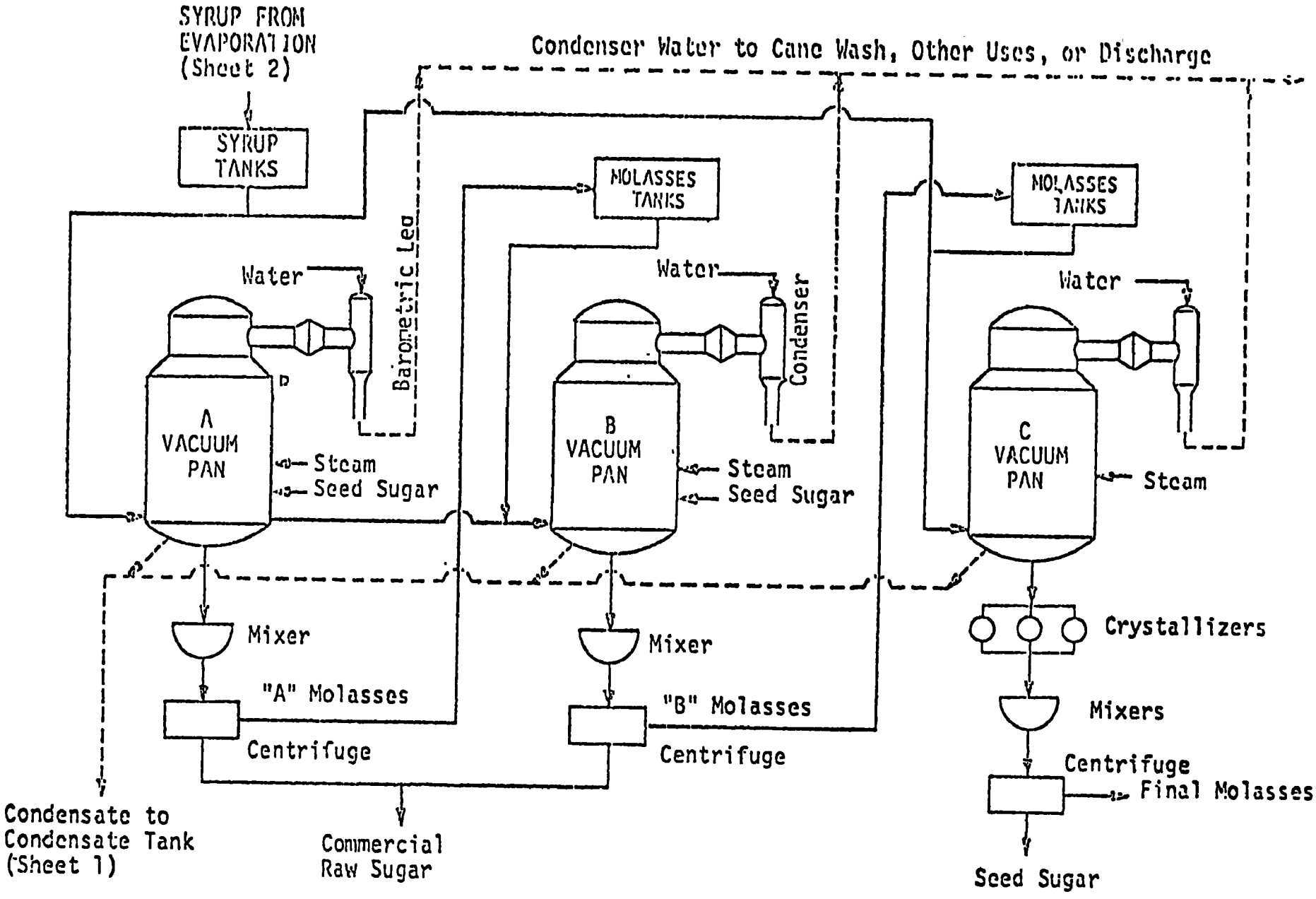

TYPICAL SUGAR BOILING SYSTEM
FIGURE A-1

Sheet 3 of 3

APPENDIX B

STEAM PIPING SYSTEM
AND
BOILER OPERATING DATA
HONOKAA SUGAR COMPANY

HONOKAA SUGAR COMPANY

MARCH 18, 1975

A BRIEF DESCRIPTION OF THE STEAM PIPING & SYSTEM FOR THE 1975 CROP.

REFER TO THE ATTACHED SKETCH

BOILER: Steam will be generated at 610# and 800±°F., at the superheater outlet. Pressure will be controlled by a new Hagan controller in the back of the upright panel.

600# Steam to the 6000 kW Generator will be desuperheated (1.) to 750°F and should enter the turbine at 600# and 750°F. The generator will not go on line until April.

600# Steam reduced to 235# for makeup. The 600# steam is pressure reduced through two pressure control valves (4) located beside the walkway to the top of the Control Room. It will then be desuperheated to 435°F by desuperheater (2) located at the boiler end of the old 235# header.

This steam will supply the mills, fans, and turbine boiler feed pump as previously.

The entire boiler output will pass through this pressure reducing desuperheating system until such time as the 6000 kW generator is put on line.

235# Generator Exhaust Steam. This will, normally, when the 6000 kW generator is in operation, provide an adequate supply of 235# steam to satisfy the demand of all the 235# steam driven turbines; Including operation of the 1500 kW generator, on part load.

The exhaust steam will be conditioned by desuperheater (3) to a temperature of 435°F.

If for some reason the supply of exhaust from the 6000 kW generator is inadequate, as the pressure drops, the pressure control valves (4) will open and maintain a pressure slightly lower than 235# and ensure continuity of operation.

Boiling House Supply. The same control system (5) as used in previous years to control mill engine and boiling house pressure at 150#, will be used to maintain a 125# supply to the boiling house. The fuel oil heaters supply is piped from the boiling house line.

New Mills. A 12" valve (9) has been provided to supply steam to the new mill building.

1500 kW Generator. The pressure control valve (6) will reduce 235#/175# for this generator, as previously.

Deaerator Pressure. (Now 11# to 15#) A new pressure control valve (7) will reduce 235# steam to 11# and maintain this pressure in the deaerator when the 15# exhaust pressure drops below 11#. This will provide hotter boiler feed water and improve the operation of the deaerator.

Sootblowers. A 700#/235# pressure control valve (8) will provide low pressure steam, from the drum to the soot blowers.

Operation. Since the above control systems are automatic, there will normally be no need for the operator to do more than monitor steam temperatures and pressures, to satisfy himself that the systems are working correctly. However, if a control malfunctions hand operation can be used, where provided, to manually control critical temperatures or pressures.

Several changes have been made to the annunciator and temperature indicator systems to give warnings and enable you to monitor the critical points.

A temporary, amended log sheet will be used until a new log sheet can be prepared.

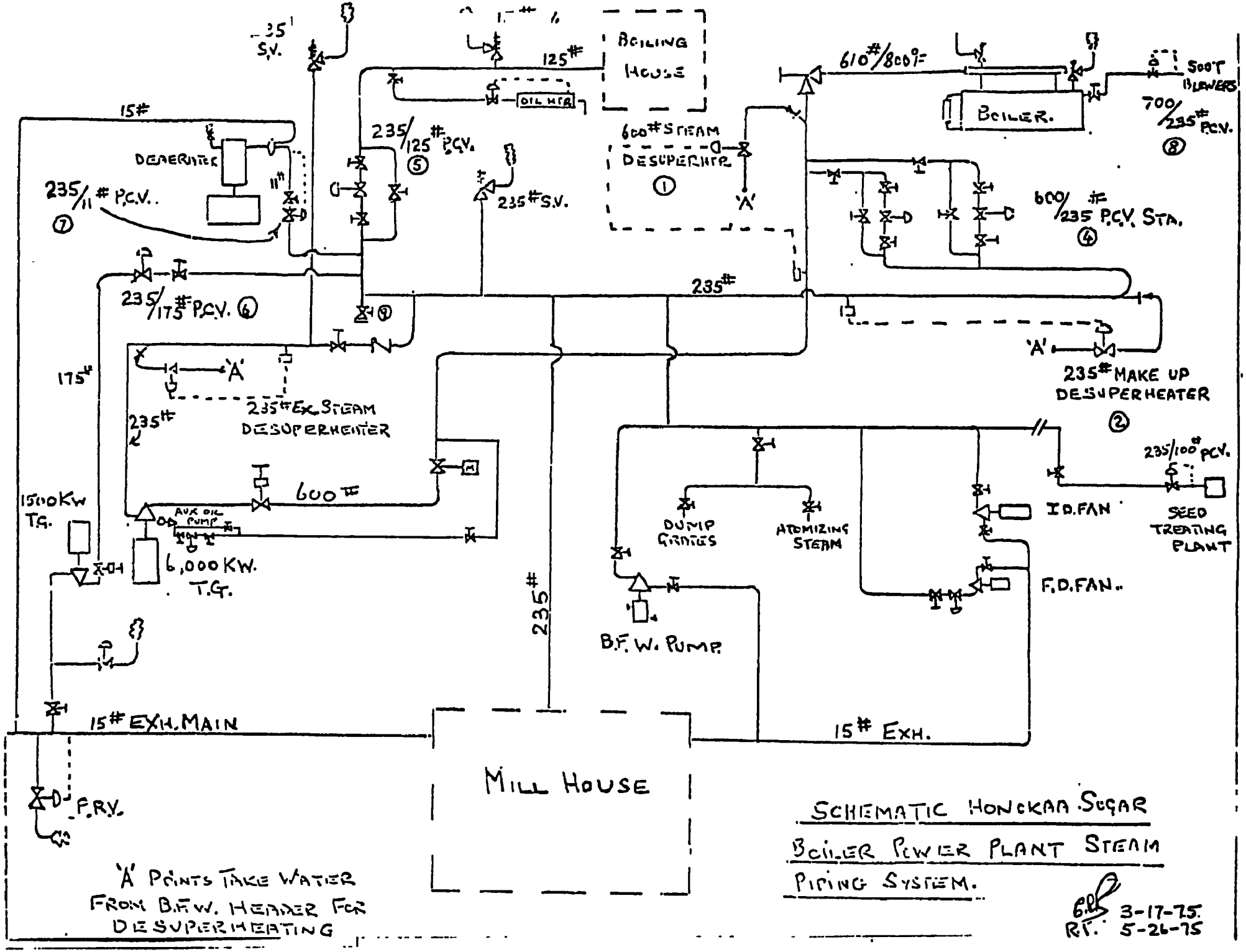
35 S.V.
125#
BOILING HOUSE
OIL HTR
610#/800°F
500°F BLOWERS
BOILER.
700/235# P.C.V. ⑧
15#
DEAERATOR
235/125# P.C.V. ⑤
600# STEAM DESUPERHTR. ①
'A'
235/11# P.C.V. ⑦
11#
235# S.V.
600/235# P.C.V. STA. ④
235/175# P.C.V. ⑥
235#
'A'
235# MAKE UP DESUPERHEATER ②
175#
'A'
235# EX. STEAM DESUPERHEATER
235#
235/100# P.C.V.
1500 KW T.G.
600#
AUX OIL PUMP
6,000 KW. T.G.
DUMP GRATES
ATOMIZING STEAM
I.D. FAN
SEED TREATING PLANT
F.D. FAN.
235#
B.F.W. PUMP
15# EXH. MAIN
15# EXH.
MILL HOUSE
P.R.V.
'A' POINTS TAKE WATER FROM B.F.W. HEADER FOR DESUPERHEATING
SCHEMATIC HONOKAA SUGAR
BOILER POWER PLANT STEAM PIPING SYSTEM.
G.P. 3-17-75
R.T. 5-26-75

Oil Storage End
Oil Storage Shaft 53.6"

May 25, 1975

Time	#s/Hr Steam	Super Heat Pressure	Super Heat Temp	Relative Air Flow	Air Preheat ~~Bottom~~ Temp (Exit)	Supple. Boiling House Steam #s/Hr	T/Hr. Bagasse Production	Bagasse Feeders
0950	145,000	620	770°	85	580°	21,500	32	4
1000	128,000	620	770°	67	575°	28,500	31.5	4
100	134,000	620	770	75	575°	30,000	32	4
110	130,000	618	770°	75	585°	31,250	32	4
*1 1020	144,000	612	770°	65	585°	29,000	32.5	4 Off for [illegible]
030	134,000	620	770°	65	580°	32,500	31.5	4
1040	140,000	620	770°	75	575°	32,500	32	4
1050	149,000	620	775	78	590°	33,750	31.5	4
1100	144,000	620	775	82	580°	32,500	32	4
1150	136,000	620	770	87.5	575°	32,500	32	4
200	138,000	620	765	80	585	38,250	32	4
210 *2	145,000	620	775	75	580	32,500	37	4
1220	144,000	610	775	85	600	38,750	35	4
230	148,000	618	782	80	592	38,750	35	4
240	152,000	610	778	90	605	36,250	35	4
1250	155,000	620	775	82	585	36,250	35	4
1300	142,000	618	775	77	590	30,000	35	4
Δ	[illegible]	[illegible]	[illegible]				[illegible]	
Δ	[illegible]	-1	+				1.5	
Δ	17[illegible]0→155,000	610→620	765→782				31.5→37	

Note: During morning run, crushing plant is slow production made while boiling house is running high because of juice backup. Steam demand still high due to boiling need, bagasse production relatively low.

*1 grate #3 dropped @ 10:18, stop feeder momentarily
*2 blew soot off air preheater
*3 grate #2 dropped @ 12:27

[illegible] 675 735

Boiler Operating Data

Honokaa Sugar
5/26/75
RB

Test #2

Time	#s/Hr Steam Production	Superheater Press	Superheater Temp	Feedwater Press (Drum)	Feedwater Temp	Feedwater Rate	Rel. Air Flow (Temp)	Boiler House Steam	Remarks
810	142,000	612	780	(640) 940 psi	240	130,000	65 (580°)	35000	3
0820	130,000	620	780	(635) 930	240	125,000	55 (585)	30,000	3s
0830	128,000	620	780	(630) 940	242	127,000	60 (575)	30,000	3
840	147,000	605	780	(620) 950	242	130,000	70 (582)	33,750	3
0850 *1 *2	144,000	605	775	(615) 930	242	140,000	(65) 590	35,000	3
900	156,000	612	778	(625) 930	240	135,000	(65) 585	35,000	3
910	148,000	610	775	(620) 920	242	135,000	(65) 590	33,750	3
120	120,000	625	770	(635) 925	240	115,000	(50) 560	> 40,000	2
0	130,000	625	775	(630) 940	245	120,000	(90) 580	27,500	3
1020 *3	126,000	630	750	(640) 900	245	115,000	(100) 560	24,750	33
030	123,000	625	770	(640) 870	242	117,000	(80) 565	24,750	32
040	128,000	630	770	(640) 940	245	120,000	(90) 575	27,500	32
1050	143,000	620	775	(635) 925	242	130,000	(70) 585	31,750	3
00	138,000	620 ~~635~~	775	(635) 940	242	130,000	(70) 585	31,750	3
$\bar{x}$	136,000	618	773	(631) 3	242	126,000			32
s	[illegible]	2	3		2	[illegible]			
r	120[illegible]			927					

*1 Dumped No 1 gate @8:45
*2 added oil ~ 1 minute @8:50, bagasse had dropped below 30T/Hr for ~3 min. 1 burner
*3 Dumped No. 3 gate at 10:18

Test #3

BOILER OPERATING DATA

HONOKAA SUGER
5/26/75 DB

27.15 T/Hr.

Time	#s/Hr Steam Production	Superheater Press	Superheater Temp	Feedwater Press (Drum)	Feedwater Temp	Feedwater Rate	Rel. Air Flow (Temp)	Boiler House Steam	Bagasse
1420	122,000	620	760	(635) 900	242	140,000	75 (565)	27,500	31.5
1430	126,000	622	770	(635) 900	242	120,000	80 (575)	27,500	31.5
1440 *1	110,000	630	780	(635) 800	242	95,000	105 (545)	36,750	22 *
*2 1450	103,000	625	770	(630) 900	242	110,000	(?) (545)	>41,000 ~~25,500~~	22 *
Down 1450–1520 Due to broken cane knife.									
1520	130,000	615	770	(630) 875	240	115,000	80 (555)	26,250	31
1530 *3	120,000	620	770	(630) 900	240	112,000	75 (560)	25,000	31.5
1540	112,000	615	760	(625) 950	242	105,000	81 (545)	21,250	32
117,000 ↑ First 18 points ↓ Last 18 points									
1620	124,000	615	760	(630) 800	242	112,000	75 (565)	22,500	32
1630 *4	130,000	625	770	(630) 800	242	110,000	80 (565)	21,250	31.5
40	115,000	620	765	(630) 800	242	107,000	75 (560)	21,250	31.5
1650	125,000	620	770	(630) 950	242	112,000	76.5 (570)	26,250	32.5
1700 *5	118,000	625	765	(635) 950	242	115,000	75 (575)	27,500	32
10	118,000	620	760	(635) 920	242	110,000	95 (575)	25,750	33
1720	121,000	625	765	(635) 940	242	112,000	86 (570)	25,000	33
119,000	621	767	3	60	1	112,000 9,800			30 31
103,000 → 103,000	515 → 630	6							

" bagasse taken from storage. * line down

*2 dropped #1 hopper @ ~~2:45~~ 14:45

*3 dropped #2 @ 1533

*4 shear pin broke in #3 feeder for 3 minutes burned out for this time.

*5 Dropped #4 @ 1700 hrs.

ENVIRONMENTAL PROTECTION AGENCY
OFFICE OF ENFORCEMENT
NATIONAL FIELD INVESTIGATIONS CENTER— DENVER
BUILDING 53, BOX 25227, DENVER FEDERAL CENTER
DENVER, COLORADO 80225

On the basis of my experience with the operation of this plant, I submit that the following figures are the best determinations of the pertinent operational parameters for this facility during the period 2:00 P.M. to 5:00 P.M., May 26, 1975.

Average bagasse usage	28.25	tons/hr
Average bagasse moisture content	49.3	%
Fuel oil usage (average)	Negligible	gal/hr
Steam production (average)	120,000	lbs/hr
Juice production (average)	200,000	lbs/hr
Boiler efficiency	Not Known	%

CERTIFIED BY:

Signature	Title	Date
C. Rowsell	Factory Superintendent	May 28, 1975

C. Rowsell

Honokaa Sugar Co. - Haina
Plant

As sanitary engineer for the Environmental Protection Agency, I agree that the above figures are the best determinations of the pertinent operational parameters for this facility during the period 2:00 P.M. to 5:00 P.M., May 26, 1975.

Signature	Title	Date
David L. Brooman	Sanitary Engineer	7/22/75
Robert D. Hay	Chief, Field Operations Branch	7/22/75

ENVIRONMENTAL PROTECTION AGENCY
OFFICE OF ENFORCEMENT
NATIONAL FIELD INVESTIGATIONS CENTER—DENVER
BUILDING 53, BOX 25227, DENVER FEDERAL CENTER
DENVER, COLORADO 80225

On the basis of my experience with the operation of this plant, I submit that the following figures are the best determinations of the pertinent operational parameters for this facility during the period 8:00 A.M. to 11:00 A.M., May 26, 1975.

Average bagasse usage	30.81	tons/hr
Average bagasse moisture content	48.0	%
Fuel oil usage (average)	Negligible	gal/hr
Steam production (average)	135,000	lbs/hr
Juice production (average)	240,000	lbs/hr
Boiler efficiency	Not Known	%

CERTIFIED BY

C. Rowsell — Signature

Factory Superintendent — Title

May 28, 1975 — Date

C. Rowsell

Honokaa Sugar Co. - Haina
Plant

As sanitary engineer for the Environmental Protection Agency, I agree that the above figures are the best determinations of the pertinent operational parameters for this facility during the period 8:00 A.M. to 11:00 A.M., May 26, 1975.

David L Brosman — Signature

Sanitary Engineer — Title

7/22/75 — Date

Robert D. Harp — Signature

Chief, Field Operations Branch — Title

7/22/75 — Date

ENVIRONMENTAL PROTECTION AGENCY
OFFICE OF ENFORCEMENT
NATIONAL FIELD INVESTIGATIONS CENTER—DENVER
BUILDING 53, BOX 25227, DENVER FEDERAL CENTER
DENVER, COLORADO 80225

On the basis of my experience with the operation of this plant, I submit that the following figures are the best determinations of the pertinent operational parameters for this facility during the period 10:00 A.M. to 1:00 P.M., May 25, 1975.

Average bagasse usage	34.45	tons/hr
Average bagasse moisture content	49.3	%
Fuel oil usage (average)	Negligible	gal/hr
Steam production (average)	140,000	lbs/hr
Juice production (average)	270,000	lbs/hr
Boiler efficiency	Not Known	%

CERTIFIED BY:

C. Rowsell	Factory Superintendent	May 28, 1975
Signature	Title	Date

C. Rowsell

Hawaiian Sugar Co. - Haina
Plant

As sanitary engineer for the Environmental Protection Agency, I agree that the above figures are the best determinations of the pertinent operational parameters for this facility during the period 10:00 A.M. to 1:00 P.M., May 25, 1975.

David K. Bowman	Sanitary Engineer	7/22/75
Signature	Title	Date
Robert D. Harp	Chief, Field Operations Branch	7/22/75
Signature	Title	

APPENDIX C

STACK MONITORING PROCEDURES

Equipment

Particulate samples were collected using a Scientific Glass TM sampling train equipped and operated as required by "Method 5 - Determination of Particulate Emission from Stationary Sources"1/. The method requires that the stack gas be sampled between 90 and 110 percent isokinetically; i.e., the kinetic energy of the stack gas must equal the kinetic energy of the gas entering the sample nozzle within ± 10 percent. Since the kinetic energy of a gas is dependent only upon the mass and velocity of the gas stream and the mass of the gas entering the nozzle is equal to that in the stack at any given time, isokineticity can be satisfied by adjusting the gas entry velocity into the nozzle to that of the stack velocity. The two velocities are related by an equation using pressure drop across a S-type pitot tube (stack velocity) and a calibrated orifice (nozzle velocity) located just prior to where the sampled gas exits from the train. Rapid adjustments to the isokinetic sampling rate are made possible by the EPA - Method 5 sampling train shown below and a nomograph which rapidly solves the pressure drop equation.

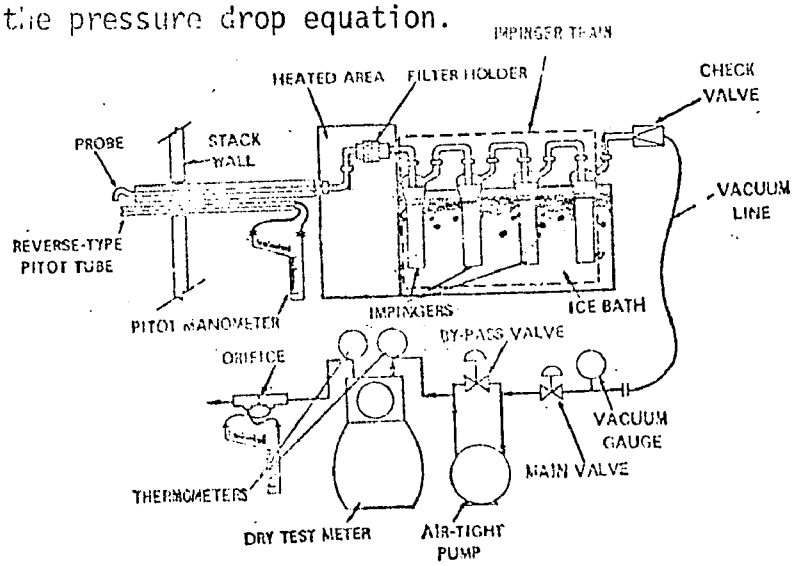

1/ Standards of Performance for New Stationary Sources, Environmental Protection Agency, Federal Register, Vol. 36, No. 247, Part II, Appendix-Test Methods, Method 5, December 23, 1971.

The probe is moved to the location to be sampled and the velocity pressure in the stack (pitot tube pressure differential, ΔP) is read on an inclined monometer. Using the nomograph, the operator solves the equation and manually adjusts the sampling rate to obtain the desired pressure drop across the calibrated discharge orifice.

The stack gases are pulled through the nozzle and probe to a cyclone which collects large particulates and then through a glass fiber filter which collects the remaining particulates. The train to this point is heated to 120°C (248°F) to eliminate condensation.

The gases then pass through four impinger tubes which are partially immersed in ice water to maintain temperatures around 21°C (70°F). The first two impinger tubes are prefilled with 100 ml of distilled water. The third is empty and 200 gms of silica gel is added to the fourth. A Greenburg-Smith impinger is used in the second tube; modified (3.8 cm (1.5 inch) ID opening). Greenburg-Smith impingers are used in the first, third and fourth tubes. The first three tubes collect water vapor and other condensable material. The air is dried by the silica gel in the fourth tube. As shown in the preceding figure, the heated box and impinger case are at the stack.

The clean, dry gases then flow through the umbilical cord to the leakless vacuum pump located at the control console. The pump operates at a constant rate; valves adjust the amount of pump discharge air recycled to the inlet of the pump and the amount drawn through the nozzle to the pump. Since the pump is leakless, the air which is pulled through the nozzle is equal to the amount which discharges from the

pump under positive pressure to the 4.96 cmh (175 cfh) Rockwell dry gas meter. Air discharges from the meter through the calibrated orifice to atmosphere.

During the test, temperatures were measured at six points throughout the train with chromel-alumel thermo-couples and displayed on a digital temperature indicator (DTI) at the control console. The locations monitored for temperature are the stack gas, the probe, the filter oven, the impinger exit, the inlet to the gas meter and the exit from the gas meter.

Molecular weight of the stack gas was determined using an Orsat analyzer to analyze a composite sample taken with a hand pump during the test period. The Orsat analyzer contains three reagents which selectively absorb CO_2, O_2 and CO. The molecular weight was then calculated by assuming that the remaining gas was nitrogen.

Static pressure of the stack was determined by facing the openings of the S-type pitot tube parallel to the gas stream. The pressure differential (compared to atmosphere) was read on the inclined monometer at the control console. Barometric pressure was read from a Lloyds barometer. The percent moisture of the stack gas was estimated for the first test. The calculated moisture content from each test was used for the following test.

Calibration

The DTI was calibrated on site with a Mini Mite ™ pyrometer. Nozzle diameter was measured with calipers to an accuracy of ± 0.025 mm (± 0.001 inch).

Napp Inc. manufactured the S-type pitot tube used for stack velocity pressure measurement. A record of the Napp Inc. calibration of the pitot tube is on file at NEIC. The gas meter was calibrated by the Public Service Company of Colorado. This calibration was checked by NEIC personnel against an American TM wet test and found to be accurate with ± 1%. Just prior to use the meter calibration was again verified to be accurate by the Gasco Co. in Honolulu, Hawaii. The discharge orifice was also calibrated by NEIC against the wet test meter and was found to have a reference pressure drop of 1.72 at a flow rate of 0.021 Std M^3/min (0.75 scfm).

Test Procedure

The points for obtaining the particulate sample were located approximately 11.6 m (38 ft.) above the ground on the bagasse boiler stack. There were four ports located at 90° intervals around the circumference of the 2.08 m (6.83 ft) diameter stack. These ports are located approximately 8.25 m (27 ft) above the exhaust gases inlet and 4.27 m (14 ft) below the stack top. The NEIC team used a 3.05 m (10 ft) probe, thus only the North and East ports were required. Thirty-six sample points were required by Method 1 to obtain a representative sample because of the port locations; i.e., 4 diameters downstream from a disturbance 2 diameters upstream.[1/] The points were located at the centroids of thirty six equal area portions of the total stack cross section. Eighteen points were sampled on each diameter.

1/ Op. Cit. Method 1

The static pressure was determined and a velocity traverse was made. These data and estimates of percent moisture and molecular weight were required to select a nozzle diameter. After the nozzle was selected, the nomograph was set and a leak check of the sampling train was performed. EPA Method 5 allows no more than 566 cc (0.02 cubic feet) leakage per minute. After satisfying the leakage requirements, the probe was inserted to the first sampling point and the test began.

The stack gas was sampled for three minutes at each point for a total of 108 minutes sampling per test. This amount of time was adequate to obtain the desired 1.7 - 2.1 m^3 (60 - 75 ft^3) of air. The 3 minute sampling time per point was a deviation from that prescribed for Method 5 in the December 23, 1971 Federal Register which calls for a minimum of 5 minutes per sampling point. However, revisions to Method 5 are being promulgated changing the minimum sampling time to two minutes. Current practice is to sample a sufficient time (but not less than two minutes at each point) to obtain the aforementioned air volume. Sampling for 5 minutes at a large number of points yields a larger than desirable air volume.

Sample Recovery

At the end of the sampling period, the sample was recovered as specified in Method 5[1/]. The probe was removed from the stack and disconnected from the train. All open connections were capped immediately to prevent gaining or losing particulate. The probe and nozzle were rinsed with acetone and brushed. The rinse was collected in a clean glass jar for later analysis.

1/ Ibid

The glass-ware portion of the train was taken to the plant chemistry laboratory for clean-up. The filter was placed in a glass petri-dish and sealed with aluminum foil. All glass-ware between the filter and the probe was rinsed with acetone. All of the acetone rinse from this portion of the train was placed in the same jar as the probe rinse.

Water from the impingers was measured and the silica gel weighed to determine percent moisture in the stack gas. The water was placed in a jar for subsequent ether-chloroform extraction. All back-half glass-ware was rinsed with acetone which was collected in a third jar. A sample of the distilled water and acetone used was also taken to determine what weight was added to the samples from the clean-up liquids.

All samples were shipped to the NEIC laboratory for analysis. Samples were handled under standard NEIC chain of custody procedures.

APPENDIX D
ANALYTICAL PROCEDURES FOR STACK MONITORING SAMPLES

Filters

Gelmans glass filters were preweighed directly on the pan of a Mettler analytical balance after 24 hours desiccation. They were then placed in petri dishes prewashed and acetone rinsed. Finally, the petri dishes were completely wrapped in foil to exclude dust.

Upon receiving the filters back in the lab they were placed in pre-weighed 100 ml beakers. The aluminum foil used to seal the filters was found to be free of particulates collected during the sampling phase and, therefore, discarded. One unused filter was used as a control. Beakers were weighed until constant weight was achieved. As the material on the filters rapidly picked up weight upon removal from the desiccator only about three filters could be weighed at a time.

Chloroform - Ethyl Ether Extracts

The materials used here were a 25 ml graduate, 2000 ml separatory funnels, pre-weighed 100 ml beakers, two square yards of chiffon nylon cloth, and Burdick and Jackson brand solvents.

Each sample was serially extracted with three 25 ml portions of CCl_3 then three 25 portions of ethyl ether. The combined extract, in a 100 ml beaker, was placed in a hood and the air intake covered with a nylon chiffon cloth to prevent dust and particulates from entering the sample. After air drying, the sample was desiccated and weighed until constant weight was achieved.

Water Portions

The water portions were measured before extraction in a large graduate cylinder. After extraction they were taken down in 800 ml beakers and transferred to 100 ml pre-weighed beakers and taken to dryness. The take down was done on a concentric ring type water bath at approximately 95°C. Measurements were recorded when constant weight was attained.

Acetone Rinses

These were first taken down in the quart sample containers inside of a hood, the intake of which was covered with nylon cloth to restrict dust from entering. When the samples were below 100 ml, they were transferred to pre-weighed 100 ml beakers and taken down to dryness. The entire take down procedure was accomplished at around 70°F and a blank was run along with the samples. After no acetone smell could be detected, the samples were placed in a desiccator and weighed 24 hours later. In some cases, constant weight was not achieved until several days later.

Richard C. Ross

Richard C. Ross

Hawaii Air Sampling - Summary of Results***

Filters

Sample No.	Particulate Wt. (g)
4201-0526(#2)	.3326
4201-0526(#2)	.3968
4202-0528(#1)	.4698
4201-0525(#1)	.3692
4201-0525(#1)	.3166
4201-0526(#3)	.2811
4201-0526(#3)	.3580
4202-0529(#2)	.3444
4202-0529(#2)	.4265
Blank	-.0002

***4201-Honokaa Sugar Mill
4202-Kekaha Sugar Mill

CCl_3-Ethyl Ether Extract Residues	Residue Weight (g)	Original Water Volume
4202-0529(#2)	.0081	505 ml
4202-0529(#1)	.0194	620
4202-0529(#3)	.0043	560
4202-0528(#1)	.0006	265
4201-0526(#2) (Blank)	-.0006	275
4202-0529(#3) (Blank)	-.0007	435
4201-0525(#1)	.0670	705
4201-0526(#2)	.0575	865
4201-0526(#3)	.0553	775

Water Residues - Post Extraction	Weight (g)
4202-0529(#2)	.1407
4202-0529(#1)	.0446
4202-0529(#3)	.1032
4202-0528(#1)	.0375
4201-0526(#2) (Blank)	.0039
4202-0529(#3) (Blank)	-.0003
4201-0525(#1)	.4907
4201-0526(#2)	.4056
4201-0526(#3)	.4019

Acetone Residues	Weight After 24 hrs (g)	Constant Weight (g)
4201-0526(#2)F.H.*	2.2073	1.6843
4201-0526(#2)B.H.**	.0320	.0320
4202-0529(#3) Blank	.0026	..0026
4201-0525(#1) Blank	..0055	.0055
4201-0525(#1)F.H.	1.8652	1.8528
4201-0525(#1)B.H.	.0242	.0242
4202-0529(#3)F.H.	.8474	.8434
4202-0529(#3)B.H.	.0129	.0129
4202-0529(#2)F.H.	.6884	.6866
4202-0529(#2)B.H.	.0285	.0285
4202-0528(#1)F.H.	.8641	.8614
4202-0528(#1)B.H.	..0383	.0383
4201-0526(#3)F.H.	2.5003	1.5995
4201-0526(#3)B.H.	..0522	.0522

*F.H. Front Half Collection **Back Half Collection

APPENDIX E

VISIBLE EMISSIONS EVALUATION

HONOKAA SUGAR COMPANY MILL

MAY 25-26, 1975

STACK RUN No.1

ENVIRONMENTAL PROTECTION AGENCY
OFFICE OF ENFORCEMENT
NATIONAL FIELD INVESTIGATIONS CENTER—DENVER
BUILDING 53, BOX 25227, DENVER FEDERAL CENTER
DENVER, COLORADO 80225

Date 5/25/75
Observer UZ Hardy

Location
Name HONOKAA Sugar mill
Address HONOKAA Hawaii

Observation Point North East

Stack - Distance From 400' Height
Wind - Speed 5 Direction East
Type of Installation Sugar Cane mill

Fuel BAGASSE
Observation began 1225 Ended 1235

Remarks:
Sun directly overhead.
Partly cloudy,

	0	15	30	45		0	15	30	45
0					30				
1	50	50	50	50	31				
2	50	50	50	50	32				
3	50	50	50	50	33				
4	50	60	60	60	34				
5	60	55	55	55	35				
6	50	50	50	50	36				
7	50	50	50	50	37				
8	50	45	45	40	38				
9	40	50	50	50	39				
10	50	60	70	70	40				
11					41				
12					42				
13					43				
14					44				
15					45				
16					46				
17					47				
18					48				
19					49				
20					50				
21					51				
22					52				
23					53				
24					54				
25					55				
26					56				
27					57				
28					58				
29					59				

Owner
Manager Mr. Cyril Rowsell,
Factory Superintendent
Address Honokaa Sugar Company
Hajna, Hawaii, Hawaii

STACK RUN. NO. 2

ENVIRONMENTAL PROTECTION AGENCY
OFFICE OF ENFORCEMENT
NATIONAL FIELD INVESTIGATIONS CENTER—DENVER
BUILDING 53, BOX 25227, DENVER FEDERAL CENTER
DENVER, COLORADO 80225

Date 5/26/75
Observer W.J. Harty

Location
Name HONOKAA Sugar CO.
Address HONOKAA HAWAII

Observation Point North East of stack
Stack - Distance From 400' Height
Wind - Speed 10-15 Direction EAST
Type of Installation BAGASSE Fired boiler.
Fuel BAGASSE
Observation began 1010 Ended 1020

Remarks:
Sun high and to EAST.
SKY partly cloudy

	0	15	30	45		0	15	30	45
0					30				
1	40	40	40	40	31				
2	40	45	45	45	32				
3	50	50	50	50	33				
4	50	45	45	45	34				
5	40	40	45	45	35				
6	50	50	50	45	36				
7	45	45	45	50	37				
8	50	45	45	45	38				
9	50	70	80	90	39				
10	80	70	80	50	40				
11					41				
12					42				
13					43				
14					44				
15					45				
16					46				
17					47				
18					48				
19					49				
20					50				
21					51				
22					52				
23					53				
24					54				
25					55				
26					56				
27					57				
28					58				
29					59				

Owner
Manager Mr. Cyril Rowsell,
Address Factory Superintendent
~~Honokaa Sugar Company~~
Haina, Hawaii, Hawaii

STACK RUN No. 3

ENVIRONMENTAL PROTECTION AGENCY
OFFICE OF ENFORCEMENT
NATIONAL FIELD INVESTIGATIONS CENTER—DENVER
BUILDING 53, BOX 25227, DENVER FEDERAL CENTER
DENVER, COLORADO 80225

Date 5-26-75
Observer Edlund

Location
Name Honokaa Sugar Bagasse Boiler
Address Honokaa Hawaii

Observation Point 100 ft No. of stack

Stack - Distance From ____ Height ____

Wind - Speed ____ Direction ____

Type of Installation ____

Fuel Bagasse

Observation began 1630 Ended 1640

Remarks:
wind from east @ 2 10 mph
overcast sky
plume brown

49%

	0	15	30	45		0	15	30	45
0	50	55	45	45	30				
1	40	50	60	45	31				
2	35	45	45	40	32				
3	40	45	45	60	33				
4	55	40	35	40	34				
5	55	55	60	65	35				
6	75	90	65	55	36				
7	30	40	35	40	37				
8	40	50	35	35	38				
9	40	60	65	35	39				
10	40				40				
11					41				
12					42				
13					43				
14					44				
15					45				
16					46				
17					47				
18					48				
19					49				
20					50				
21					51				
22					52				
23					53				
24					54				
25					55				
26					56				
27					57				
28					58				
29					59				

Owner
Manager Mr. Cyril Rowsell,
Factory Superintendent
Address ~~Honokaa Sugar Company~~
Haina, Hawaii, Hawaii