EPA-650/2-74-106
OCTOBER 1974

Environmental Protection Technology Series

SYSTEM ANALYSIS OF AIR POLLUTANT EMISSIONS FROM THE CHEMICAL/PLASTICS INDUSTRY

Office of Research and Development
U.S. Environmental Protection Agency
Washington, DC 20460

EPA-650/2-74-106

SYSTEM ANALYSIS OF AIR POLLUTANT EMISSIONS FROM THE CHEMICAL/PLASTICS INDUSTRY

by

Herbert Terry and Stephen Nagy

Foster D. Snell, Inc.
Hanover Road
Florham Park, New Jersey 07932

Contract No. 68-02-1068
ROAP No. 21 AXM-060
Program Element No. 1AB015

EPA Project Officer: Belur N. Murthy

Control Systems Laboratory
National Environmental Research Center
Research Triangle Park, North Carolina 27711

Prepared for

OFFICE OF RESEARCH AND DEVELOPMENT
U.S. ENVIRONMENTAL PROTECTION AGENCY
WASHINGTON, D. C. 20460

October 1974

This report has been reviewed by the Environmental Protection Agency and approved for publication. Approval does not signify that the contents necessarily reflect the views and policies of the Agency, nor does mention of trade names or commercial products constitute endorsement or recommendation for use.

ABSTRACT

This system analysis of air pollution by the Chemical/Plastics Industry (SIC 2821; Plastic Materials and Synthetic Resins) defines producers, production volume, forecasted growth rates, plant capacities, plant locations and the average population density at each plant site. Major processes are described in terms of equipment, reaction conditions, specific process chemicals used and general air pollution controls. A decision model, utilizing probabilities and weighing techniques, was developed and assigned priority indices to the 14 generic groups of products in this SIC group from the viewpoint of emissions and air pollution control. The model relates the interactions of such factors as total population exposed, production volume, growth trends, emission, odor and hazard potential of the most likely pollutants and identified polyurethanes, acrylics and alkyds as the most likely candidates for in-depth study. Estimates of emissions factors and a discussion of emission controls and their costs for these three products is presented. Similar information was developed for some high-volume plastic materials: polyethylene, polystyrene, polypropylene, nylon and polyvinyl chloride. While a number of pollution control devices are used in this industry, the majority are associated with large volume resin manufacture and function primarily to recover product or heat values since in most instances the economics dictate against installation of control devices for the sole purpose of pollution control. Operating costs for various controls are calculated.

It is recommended that EPA study process modifications to reduce gaseous air pollutant emissions from large air volume sources; evaluate the use of liquid scrubber systems versus combustion based techniques; study air quality in the vicinity of polyvinyl chloride plants in face of new evidence indicating that vinyl chloride monomer may be more hazardous than hitherto believed; and refine the priority decision model through computerization and continued updating.

Information retrieval and analysis in this study was carried out from March 1973 through March 1974.

TABLE OF CONTENTS

		Page
ABSTRACT		
SECTION I	FINDINGS AND CONCLUSIONS	I-1
SECTION II	RECOMMENDATIONS	II-1
SECTION III	INTRODUCTION	III-1
SECTION IV	STUDY APPROACH	IV-1
SECTION V	PROFILE OF THE CHEMICAL/PLASTICS INDUSTRY REGARDING MARKET, PRODUCTION, PLANT LOCATION AND POPULATION EXPOSURE FACTORS	V-1
SECTION V-A	POLYETHYLENE AND COPOLYMERS	V-8
SECTION V-B	VINYL RESINS	V-10
SECTION V-C	STYRENE RESINS	V-17
SECTION V-D	POLYPROPYLENE	V-21
SECTION V-E	PHENOLIC AND OTHER TAR ACID RESINS	V-24
SECTION V-F	POLYESTERS	V-27
SECTION V-G	AMINO (U-F and M-F) RESINS	V-31
SECTION V-H	ALKYDS	V-34
SECTION V-I	ACRYLICS	V-39
SECTION V-J	COUMARONE-INDENE AND PETROLEUM RESINS	V-41
SECTION V-K	POLYURETHANES	V-43
SECTION V-L	CELLULOSICS	V-49
SECTION V-M	EPOXY RESINS	V-51

TABLE OF CONTENTS (continued)

		Page
SECTION V-N	POLYAMIDES	V-54
SECTION V-O	ROSIN MODIFICATIONS	V-57
SECTION VI	GENERAL PROFILE OF THE CHEMICAL/PLASTICS INDUSTRY REGARDING PROCESS TECHNOLOGY AND AIR POLLUTANT EMISSIONS	VI-1
SECTION VI-A	POLYETHYLENE AND COPOLYMERS	VI-2
SECTION VI-B	VINYL RESINS	VI-9
SECTION VI-C	STYRENE RESINS	VI-19
SECTION VI-D	POLYPROPYLENE	VI-30
SECTION VI-E	PHENOLIC AND OTHER TAR ACID RESINS	VI-33
SECTION VI-F	POLYESTERS	VI-39
SECTION VI-G	AMINO (U-F and M-F) RESINS	VI-42
SECTION VI-H	ALKYDS	VI-48
SECTION VI-I	ACRYLICS	VI-50
SECTION VI-J	COUMARONE-INDENE AND PETROLEUM RESINS	VI-52
SECTION VI-K	POLYURETHANES	VI-56
SECTION VI-L	CELLULOSICS	VI-61
SECTION VI-M	EPOXY RESINS	VI-66
SECTION VI-N	POLYAMIDES	VI-69
SECTION VII	PRIORITY DECISION MODEL	VII-1
SECTION VIII	IN-DEPTH STUDIES	VIII-1
SECTION VIII-A	POLYURETHANES	VIII-2

TABLE OF CONTENTS (continued)

		Page
SECTION VIII-B	ACRYLICS	VIII-9
SECTION VIII-C	ALKYDS	VIII-18
SECTION VIII-D	EMISSION QUANTIFICATION AND CONTROL TECHNIQUES FOR SOME HIGH VOLUME PLASTICS	VIII-26
SECTION VIII-E	ECONOMICS OF TYPICAL EMISSION CONTROL METHODS	VIII-30
SECTION IX	REFERENCES	IX-1

APPENDICES

APPENDIX 1	ADDITIONAL PRODUCERS' LOCATIONS
APPENDIX 2	DEVELOPMENT OF EMISSION POTENTIAL INDICES
APPENDIX 3	HAZARD, ODOR AND PHYSICAL DATA ON PRINCIPAL POLYMER INDUSTRY CHEMICALS
APPENDIX 4	DEVELOPMENT OF HAZARD AND ODOR POTENTIAL INDICES

LIST OF EXHIBITS

		Page
EXHIBIT I-1	SUMMARY OF FACTORS IN THE PRIORITY DECISION MODEL	I-5
EXHIBIT I-2	RANKING OF PLASTICS SECTORS REGARDING AIR POLLUTION SYSTEMS FACTORS	I-6
EXHIBIT I-3	KEY FINDINGS FROM THE PRIORITY DECISION MODEL	I-7
EXHIBIT II-1	RECOMMENDED R&D PROJECT PLANS	II-4
EXHIBIT V-1	TOTAL PLASTICS AND RESIN MATERIALS PRODUCTION	V-3
EXHIBIT V-2	PLASTIC AND RESIN MATERIALS PRODUCTION 1964 - 1972 and 1977	V-4
EXHIBIT V-3	PLASTIC AND RESIN PRODUCTION RANKED IN ORDER OF VOLUME	V-5
EXHIBIT V-4	INDIVIDUAL RESINS AS PERCENT OF TOTAL 1972 PRODUCTION	V-6
EXHIBIT V-A	PRODUCERS: POLYETHYLENE	V-9
EXHIBIT V-B1	PRODUCERS: POLYVINYL CHLORIDE	V-11
EXHIBIT V-B2	PRODUCERS: POLYVINYL ACETATE	V-14
EXHIBIT V-B3	PRODUCERS: POLYVINYL ALCOHOL	V-16
EXHIBIT V-C	PRODUCERS: STYRENE RESINS	V-19
EXHIBIT V-D	PRODUCERS : POLYPROPYLENE	V-22
EXHIBIT V-E	PRODUCERS: PHENOLICS	V-25
EXHIBIT V-F	PRODUCERS: POLYESTERS	V-28
EXHIBIT V-G	PRODUCERS : AMINO RESINS	V-32

LIST OF EXHIBITS (continued)

		Page
EXHIBIT V-H	PRODUCERS: ALKYDS	V-35
EXHIBIT V-I	PRODUCERS: ACRYLICS	V-40
EXHIBIT V-J	PRODUCERS: COUMARONE-INDENE AND PETROLEUM RESINS	V-42
EXHIBIT V-K1	PRODUCTION OF POLYURETHANES FOR ADHESIVES, COATINGS AND SEALANTS MANUFACTURE (Resin; Compounded Basis)	V-44
EXHIBIT V-K2	PRODUCERS: POLYURETHANES	V-46
EXHIBIT V-L	PRODUCERS: CELLULOSICS	V-50
EXHIBIT V-M	PRODUCERS: EPOXY RESINS	V-52
EXHIBIT V-N	PRODUCERS: POLYAMIDE RESINS	V-55
EXHIBIT V-O	PRODUCERS: ROSIN ESTERS AND ADDUCTS	V-58
EXHIBIT VI-A1	FLOW SHEET: LD POLYETHYLENE PRODUCTION (High Pressure Process)	VI-3
EXHIBIT VI-A2	FLOW SHEET: HD POLYETHYLENE PRODUCTION (Phillips Solution and Slurry Processes)	VI-5
EXHIBIT VI-A3	FLOW SHEET: HD POLYETHYLENE PRODUCTION (Ziegler Slurry Process)	VI-7
EXHIBIT VI-B1	FLOW SHEET: POLYVINYL CHLORIDE PRODUCTION (Suspension Polymerization Process)	VI-10
EXHIBIT VI-B2	FLOW SHEET: POLYVINYL CHLORIDE PRODUCTION (Bulk Polymerization Process)	VI-12
EXHIBIT VI-B3	FLOW SHEET: POLYVINYL ACETATE PRODUCTION (Emulsion Polymerization Process)	VI-13
EXHIBIT VI-B4	FLOW SHEET: POLYVINYL ACETATE PRODUCTION (Solution Polymerization Process)	VI-14

LIST OF EXHIBITS (continued)

		Page
EXHIBIT VI-B5	FLOW SHEET: POLYVINYL ACETATE PRODUCTION (Bulk Polymerization Process)	VI-15
EXHIBIT VI-B6	FLOW SHEET: POLYVINYL ALCOHOL PRODUCTION	VI-17
EXHIBIT VI-C1	FLOW SHEET: CRYSTAL POLYSTYRENE PRODUCTION (Suspension Polymerization Process)	VI-20
EXHIBIT VI-C2	FLOW SHEET: CRYSTAL POLYSTYRENE PRODUCTION (Continuous Solvent Polymerization Process)	VI-22
EXHIBIT VI-C3	FLOW SHEET: CRYSTAL POLYSTYRENE PRODUCTION (Continuous Bulk Polymerization Process)	VI-23
EXHIBIT VI-C4	FLOW SHEET: IMPACT POLYSTYRENE PRODUCTION (Idealized Continuous Process)	VI-24
EXHIBIT VI-C5	FLOW SHEET: IMPACT POLYSTYRENE PRODUCTION (Suspension Polymerization Process)	VI-25
EXHIBIT VI-C6	FLOW SHEET: ABS PRODUCTION	VI-27
EXHIBIT VI-D	FLOW SHEET: POLYPROPYLENE PRODUCTION (Continuous Process)	VI-31
EXHIBIT VI-E1	FLOW SHEET: PHENOLIC RESIN PRODUCTION	VI-34
EXHIBIT VI-E2	FLOW SHEET: PHENOLIC RESIN PRODUCTION	VI-36
EXHIBIT VI-F	FLOW SHEET: POLYESTER RESIN PRODUCTION	VI-40
EXHIBIT VI-G1	FLOW SHEET: SOLID AMINO RESIN PRODUCTION	VI-43
EXHIBIT VI-G2	FLOW SHEET: BUTYLATED MELAMINE RESIN PRODUCTION	VI-45
EXHIBIT VI-J	FLOW SHEET: COUMARONE-INDENE AND HYDROCARBON RESIN PRODUCTION	VI-53

LIST OF EXHIBITS (continued)

		Page
EXHIBIT VI-K1	SOME URETHANE COATING RESINS AS SUPPLIED BY THE PRODUCERS	VI-57
EXHIBIT VI-K2	CLASSIFICATION OF URETHANE SURFACE COATINGS	VI-58
EXHIBIT VI-L	FLOW SHEET: THE MECHANICAL DIPPER PROCESS FOR NITRATING CELLULOSE	VI-64
EXHIBIT VI-M	FLOW SHEET: EPOXY RESIN PRODUCTION	VI-67
EXHIBIT VI-N1	FLOW SHEET: NYLON 6 PRODUCTION	VI-70
EXHIBIT VI-N2	FLOW SHEET: NYLON 66 PRODUCTION	VI-72
EXHIBIT VII-1	SUMMARY OF FACTORS IN THE PRIORITY DECISION MODEL	VII-2
EXHIBIT VII-2	SELECTION OF PLASTICS SECTORS FOR DETAILED STUDY	VII-3
EXHIBIT VII-3	DEVELOPMENT OF THE PRODUCTION AND POPULATION EXPOSURE RELATED INDEX	VII-5
EXHIBIT VII-4	TOTAL POPULATION EXPOSURE MEASURE	VII-7
EXHIBIT VII-5	THE POPULATION EXPOSURE POTENTIAL OF THE AVERAGE PLANT	VII-8
EXHIBIT VII-6	DECISION MATRIX FOR EMISSION POTENTIAL	VII-11
EXHIBIT VII-7	TOTAL POTENTIAL EMISSION INDEX	VII-12
EXHIBIT VII-8	HAZARD POTENTIAL INDEX	VII-19
EXHIBIT VII-9	ODOR POTENTIAL INDEX	VII-20
EXHIBIT VIII-A1	POLYURETHANE PREPOLYMER PROCESS FLOW SHEET	VIII-3
EXHIBIT VIII-A2	POLYURETHANE PREPOLYMER PROCESS FLOW SHEET	VIII-4

LIST OF EXHIBITS (continued)

		Page
EXHIBIT VIII-A3	EQUIPMENT FLOW SHEET FOR POLYURETHANE PREPOLYMER MANUFACTURE	VIII-6
EXHIBIT VIII-C1	ALKYD PROCESSING	VIII-20
EXHIBIT VIII-C2	SUMMARY OF EMISSIONS FROM AN ALKYD PLANT PRODUCING 2.2 - 2.4 MILLION POUNDS OF ALKYD SOLIDS	VIII-23
EXHIBIT VIII-D1	EMISSION CONTROLS REPORTEDLY USED BY POLYMER MANUFACTURERS	VIII-27
EXHIBIT VIII-D2	EMISSION FACTORS FOR SOME LARGE VOLUME RESINS	VIII-29
EXHIBIT VIII-E1	REVIEW OF SPECIFIC PIECES OF EQUIPMENT IN ACTUAL USE	VIII-32
EXHIBIT VIII-E2	CAPITAL COSTS OF BAG DUST COLLECTORS	VIII-36
EXHIBIT VIII-E3	CAPITAL COSTS OF JET SCRUBBERS	VIII-39
EXHIBIT VIII-E4	EMISSION CONTROL COSTS	VIII-42

SECTION I

FINDINGS AND CONCLUSIONS

SECTION I

FINDINGS AND CONCLUSIONS

The basic function of the chemical/plastic industry (SIC 2821) is the manufacture of plastic materials, synthetic resins and nonvulcanizable elastomers.

1. MARKET, PRODUCTION, PLANT LOCATION AND POPULATION EXPOSURE RELATED FACTORS

The general conclusions that follow are referenced to the information presented in Section V, while specific findings are embodied in the Priority Decision Model discussed under sub-section 3.

- In the U.S., seven resin groups account for 90% of the industry's production.
- These are shown in the table below.

Resin	Percent of Production by Volume
Polyethylene and copolymers	31.1%
Vinyl resins	21.2
Styrene resins	18.3
Polypropylene	7.2
Phenolic and other tar acid resins	5.8
Polyesters	3.5
Amino resins	3.5

Source: Exhibit V-4

- The growth rate of the overall industry volume will be 12 - 15% through 1977 if the recent raw material shortages do not persist in the long run.
- In this study about 1,200 manufacturing operations were identified. The number of plastic and resin producers have increased by 700% since 1947. The plants may incorporate manufacturing of several different plastic materials and may also have diversified into the production of raw materials or finished products.

Plants are relatively evenly distributed across the country, following the geographic pattern of the national population. However, five states account for about 50% of chemical/plastic operations in the United States. These states are:

- California
- New Jersey
- Illinois
- Pennsylvania
- Ohio

2. GENERAL PROFILE REGARDING PROCESS TECHNOLOGY AND AIR POLLUTANT EMISSIONS

The general conclusions that follow are referenced to the information presented in Section VI, while specific findings are embodied in the Priority Decision Model discussed under sub-section 3.

. The basic unit operation of the industry is polymerization. The principal steps in process sequence are listed below

- receiving and storage of process chemicals (monomers, etc.)
- purification of monomers and solvents
- prepolymerization
- polymerization (batch or continuous)
  - .. suspension
  - .. emulsion
  - .. bulk
  - .. solution
- polymer separation (centrifugation, drying, etc.)
- compounding and final product handling

The principal emissions produced in plastics and resin manufacture vary with the chemical species that are used. The hazard, odor and physical characteristics of these chemicals show a wide variance. Typical emissions may be due to

- the reactants (monomers)
- solvents
- stabilizers
- reaction activators
- catalysts

Typical normal emission sources include

- monomer transfer
- reactor venting, cleaning, etc
- venting of holding tanks
- drying
- leaking seals and other fugitive losses

Generally, emissions are at low heights without the use of tall stacks for dilution. For the great majority of operations the volumes emitted are relatively small since material throughputs are modest.

Air pollution control is generally characterized as constituting materials recovery. Equipment specifically intended for air pollution control is most likely to be found at large plants, new plants and establishments of major producers.

The control of gaseous emittants at relatively low concentrations, such as from dryers and ventilation exhausts, represents an area for significant research and development. It would make sound economic sense to emphasize minimizing monomer content in resins before drying. Further development work may be desirable regarding ventilation systems with combining of exhausts from "spot" ventilation of problem sources in-plant into a single or few controlled emission points.

3. PRIORITY DECISION MODEL

The specific conclusions that follow are referenced to the systems analysis factors assimilated in the Priority Decision Model presented in Section VII and Sections V and VI discussed above.

The Priority Decision Model was developed from standardized evaluation and comparison of the major polymerization processes including such factors and sub-factors as:

- Total potential population exposed
- Population exposure potential of the average plant
- Plastic production volume
- Production growth trend
- Emission potential index
- Hazard potential index
- Odor potential index

The model, depicted in Exhibits I-1 and I-2, was developed jointly with EPA and features the factors discussed above. Major emphasis in this model is directed to the hazard index.

- The hazard potential is derived from published occupational safety and health threshold limit values (TLV) of most likely air contaminants.

- Market and production data provided the information to estimate the total potential population exposed in terms of each sector, taking into account the average plant, growth trends and production volume.

- Emission potentials were based on process technology assessment.

- Odor potential was based on published odor threshold data.

Exhibit I-3 summarizes key findings related to the elements of the model.

EXHIBIT I-1
Environmental Protection Agency
SUMMARY OF FACTORS IN THE
PRIORITY DECISION MODEL

Broad Systems Analysis Factors For Each Chemical/Plastics Industry Sector		Sub-Factors	Sub-Factor Weight
A:	Market and Production from data in Section V	. A_1=Total Potential Population Exposed	0.4
		. A_2=Population Exposure Potential of the Average Plant	0.2
		. A_3=Plastic Production Volume	0.2
		. A_4=Production Growth Trend	0.2
B:	Emission Potential from information in Section VI	. Process Technology Assessment	1.0
C:	Hazard Potential from information in Section VI	. Toxicity (TLV) of Principal Likely Emissions	1.0
D:	Odor Potential from information in Section VI	. Odor Threshold of Principal Likely Emissions	1.0

Priority Decision Formula

AC + BC + AD = R, where R is the overall rating

The formula has the following features:

- The hazard factor, C, appears twice as a multiplicant and is given significant emphasis, as required by EPA
- The product of A x C emphasizes situations where the hazard potential is high and the potential population exposure is great
- The product of B x C emphasizes situations where hazard potential and emission potential are high and, therefore, the relative magnitude of potential concentrations of hazardous substances at receptor locations are factored in qualitatively
- The product of A x D emphasizes the relative magnitude of the potential nuisance to the population from odorous substances

Source: Snell (and EPA and Snell in development of priority decision formula)

EXHIBIT I-2
Environmental Protection Agency
RANKING OF PLASTICS SECTORS
REGARDING AIR POLLUTION
SYSTEMS FACTORS

Selection formula: AC + BC + AD = R

Plastic	A Production & Population Exposure Related Index Number	B Emission Potential Index Number	C Hazard Index Number	D Odor Index Number	R Overall Selection Index Number	Priority Order
Vinyl Resins	10.0	7.0	4.0 (1)	2.3	91.0	8
Styrene Resins	8.5	7.4	2.8	7.4	107.4	6
Acrylics	8.5	5.0	4.5	9.0	137.3	2
Alkyds	8.0	4.8	6.6	5.0	124.5	3
Polyurethanes	8.0	2.6	9.3	7.7	160.2	1
Phenolic and Other Tar Acid Resins	7.5	4.0	5.2	6.9	111.6	4
Polyethylene and Copolymers	6.5	8.0	1.3	2.5	35.2	12
Polyesters	6.5	4.8	6.6	5.3	109.1	5
Amino Resins	6.5	5.3	4.8	6.8	100.8	7
Cellulosics	6.0	6.7	3.5	4.3	70.3	10
Polyamides	5.5	7.0	1.2	1.5	23.3	14
Polypropylene	5.0	8.8	1.7	1.9	33.0	13
Coumarone-Indene and Petroleum Resins	5.0	7.1	4.2	7.7	89.3	9
Epoxy Resins	3.5	4.2	5.4	4.1	56.0	11

(1) Based on 50 ppm TLV for vinyl chloride

Source: Snell

EXHIBIT I-3
Environmental Protection Agency
KEY FINDINGS FROM THE PRIORITY DECISION MODEL

Production and Population Exposure

- In terms of total potential population exposed alkyds, polyurethanes, acrylics, amino resins and phenolic and other tar acid resins are most significant. This is because there are numerous establishments engaged in the manufacture of these products, and are often located in populated areas.
- The population exposure potential of the average plant is highest for cellulosics, where establishments are located in high population density areas. This index is then most significant for alkyds as well as coumarone-indene and petroleum resins.
- Plastic production volume is highest for polyethylene and copolymers, vinyl resins, styrene resins, and polypropylene. These account for approximately 78 percent of total annual production volume. The next four highest volume plastics and resins are phenolic and other tar acid resins, polyesters, amino resins, and alkyds accounting for only approximately 16 percent.
- The highest volume resins also exhibit the most significant production growth trend. Acrylics are also characterized by rapid potential growth.

Emission Potential

- The manufacture of the largest volume products has the highest emission potential both in terms of process complexity and possible emission quantity at individual plant sites. These products include polyethylene and copolymers, vinyl resins, styrene resins and polypropylene.
- Polyurethanes production, excluding foam manufacture, which is not considered part of the chemical/plastics industry, has the lowest emission potential. Reasons include process simplicity and use of almost closed systems.

Hazard Potential

- The hazard potential of the principal chemical species in manufacture is overwhelmingly highest for polyurethanes because of the use of isocyanates.
- The next important categories in this regard are alkyds and polyesters.
- The hazard index assigned to vinyl resins is 4.0 versus 9.3 for polyurethanes based, in part, on the use of a TLV of 50 ppm for vinyl chloride versus 0.02 ppm for toluene diisocyanate, respectively. However, in the light of recent evidence[62] linking polyvinyl chloride (PVC) operations to cancer deaths, this index may have to be revised upward as new exposure standards are set.

Odor Potential

- The odor potential of the principal chemical species is overwhelmingly highest for acrylics.
- The next important categories in this regard are coumarone-indene and petroleum resins, polyurethanes and styrene resins.

Source: Snell

The system.. analysis of air emission in the chemical/plastics industry identified polyurethanes, acrylics, and alkyds as the prime candidates for in-depth study. However, it is possible that in the wake of the emerging concern with the hazards associated with PVC, the hazard index associated with vinyl resins will have to be raised from 4.0, for example, to 9.0. Then, vinyl resins will become of highest priority concern from a systems viewpoint of air pollution control.

4. IN-DEPTH STUDIES

The specific conclusions that follow are referenced to the information presented in Section VIII, dealing with

- Emissions and their controls from the manufacture of polyurethanes, acrylics and alkyds as well as other selected high volume resins.

- Emission control technology and costs.

The in-depth evaluations confirm the low emission potential index assigned to polyurethanes manufacture (excluding foams). Although the hazard index is high, emission factors are low - of the order of 3×10^{-7} lbs isocyanates per lb of prepolymer. Effective control technology exists and is believed to be practiced.

Conventional scrubbing techniques can reduce appreciably the total emissions from acrylic facilities but not easily eliminate odor nuisance.

- From a solution polymerization process acrylic ester emissions could be of the order of 1×10^{-3} lbs per lb of product, while this could be 3×10^{-3} for solvent.

- From an emulsion process emission of both acrylic monomers and vinyl acetate could be of the order of 1×10^{-3} lbs per lb of product, respectively.

- From a suspension process acrylic monomers emission could be of the order of 5×10^{-4} lbs per lb of product.

The principal emission problem with the manufacture of alkyds is solvents. Total emissions can be of the order of 0.01 lbs per lb of product.

The in-depth studies also provide specific emission factor data for high volume resins and control cost data for representative emission control devices.

The table below summarizes operating cost data for representative control techniques.

Emission Control Device	Annual Operating Cost Per CFM of Capacity
Bag Filters	$0.30 - 0.50[1]
Compression/Refrigeration	$3.00 - 6.00[1]
Scrubbers	$0.40 - 0.60[1]
Flares	$0.10 - 0.20[2]
Regenerative Adsorption	$2.00 - 6.00[3]

1. Neglecting the value of recovered product.

2. Assumes no heating value for the stream itself, but does include supplying the necessary air in case of an essentially inert gas stream.

3. Excludes values of recovered material and assumes a 0.05 - 0.3% by weight concentration of absorbate. Also excludes the cost of a pretreatment of the gas stream.

Source: Section VIII

5. OVERALL CONCLUSIONS

The study indicates that plastics industry sources of air pollution which require control technology development are:

- Monomer emissions, particularly of materials of hitherto unrecognized toxicity, e.g., vinyl chloride;

- Solvent emissions, both from solution polymerization and alkyd manufacture.

Currently, flaring, bag filtration and scrubbing are the most economical techniques available for control, as compared to regenerative adsorption and compression/refrigeration which are up to ten times as costly to operate. The basic problem with all of these techniques, however, is that none currently addresses in a satisfactory manner the control of potentially significant absolute quantities of air pollutants when dispersed in large volumes of vehicular air, for example, from drying operations and general plant ventilation. Process development and improvements probably represent a better approach to minimizing emissions at low concentration in large air volumes than development of effluent cleanup techniques specifically addressing this problem.

* * * * *

The section that follows deals with recommendations.

SECTION II

RECOMMENDATIONS

SECTION II

RECOMMENDATIONS

Recommendations based upon the system analysis of air pollutant emissions fall into two categories

- engineering and scientific investigations
- further system analyses

The discussion below details each recommendation, while Exhibit II-1 provides R&D project plans.

1. STUDY PROCESS MODIFICATIONS TO REDUCE GASEOUS AIR POLLUTANT EMISSIONS FROM LARGE AIR VOLUME SOURCES

- Large air volume sources include dryers and ventilation systems.
- The removal of low concentration gaseous emittants (mostly hydrocarbons) from dryer exhausts can represent a major economic and engineering undertaking because of the large volumes of air utilized, if removal is to be affected after drying.
- It is recommended that various techniques of stripping monomers and other potential gaseous emittants be examined in-depth before the drying step.
- For example, in the polyvinyl chloride industry steam stripping is being studied.
- In regard to ventilation, it is recommended that combining of vents and ventilation exhausts into a limited number of controlled emission points be studied.

- Engineering studies with extensive industry contacts and minimum dependence on literature review are envisioned.

2. EVALUATE IN-DEPTH THE USE OF LIQUID SCRUBBER SYSTEMS FOR EMISSION CONTROL vs. COMBUSTION BASED SYSTEMS

Combustion type pollution control systems usually require fuel enrichment to sustain combustion. With the present and continuing energy crisis, fuels will remain short and scrubbing will conserve this commodity. It may also provide recycling opportunities rather than destruction of valuable raw materials.

- Conduct a technical and economic evaluation of various liquid (water and oil) scrubbers and packed columns for removing organic contaminants from air streams.

- Compare the cost and effectiveness of scrubber systems with thermal decomposition methods.

3. STUDY THE IMPACT OF AIR QUALITY IN THE VICINITY OF POLYVINYL CHLORIDE PLANTS

In light of recent evidence linking polyvinyl chloride operations to cancer deaths, measurements of atmospheric contaminants in the proximity of producing plants should be made and used as a basis for the evaluation of health effects on exposed populations and to set subsequent emission standards.

- Dispersion models of 8-10 sites under conservative meteorological assumptions should be made.

- Ambient modeling of 8-10 residential and/or residential zones near plants.

4. <u>REFINE THE PRIORITY DECISION MODEL FOR THE CHEMICAL/PLASTICS INDUSTRY THROUGH COMPUTERIZATION AND CONTINUING INFORMATION RETRIEVAL</u>

- The Priority Decision Model of Section VII provides a systematic framework for considering basic technical as well as economic factors related to air pollution control at the industry level.

- It is recommended that the model be adapted to computerization.

- It is further recommended that a continuing information retrieval program be maintained focusing upon

  - updating information related to the economic structure of the industry (production, market and population exposure data, etc.)

  - continuing study of the hazard potential of the chemicals used

  - continuing compilation of emission factors as a function of changing technology, improved emission controls and data availability

* * * *

The next section introduces the details of the study.

Exhibit II-1 (1)
Environmental Protection Agency
RECOMMENDED R&D PROJECT PLANS

Project Name	Priority	Project Definition	Expected Deliverable(s)	Time Frame	Man-Years	Principle Skills Needed
Control of Emissions From Large Air Volume Sources	1	. Dryers and ventilation systems can represent large air volume sources with low concentrations of emittants . Stripping of emittants before drying is to be studied . Use of combined ventilation and other exhaust system is to be studied with centralized air pollution control . Industry contacts are to be emphasized	. Conceptual design and cost estimates . Recommended pilot plant scale work	1	1	Experience in Polymer Plant Design Process Engineering Drying Ventilation
Evaluation of Liquid Scrubber vs. Combustion Based Approaches	2	. Comparison of cost and effectiveness of scrubber systems versus thermal decomposition methods	. Technical and economic evaluation of various liquid (water and oil) scrubbers for removing organic contaminants from air streams. . Estimation of cost effectiveness for recovering selected materials for recycle purposes. . Literature review is to be the study approach	3 months	1/4	Process Engineering Air Pollution Control

EXHIBIT II-1 (2)

Project Name	Priority	Project Definition	Expected Deliverable(s)	Time Frame	Man-Years	Principle Skills Needed
Study the Impact of Air Quality in the Vicinity of Polyvinyl Chloride Plants and Detailed Engineering Study Regarding Emissions	3	. In light of recent evidence possibly linking polyvinyl operations to cancer deaths in production plants, pollutant concentrations in the atmosphere to which population is exposed should be quantified and used as a basis to evaluate health effects. . Perform detailed engineering study regarding extent of emission, status of controls and possible future controls.	. Dispersion model of 8-10 sites under conservative meteorological assumptions . Ambient monitoring of 8-10 residential or populated zones near these plants . Emission profiles . Control technology assessment	1 year	1	Meteorology Air Pollution Chemistry PVC Production Process Engineering Air Pollution Control
Computerization of Priority Decision Model and Continuing Refinement	4	Same as Project Name	. Computer based model . Continuing information retrieval regarding - hazard aspects - emission profiles - controls - industry structure	5 years	1/3 per year	Systems Analysis Computer Science Engineering Knowledge of Industry Air Pollution Control Engineering

Source: Snell

SECTION III

INTRODUCTION

SECTION III
INTRODUCTION

The increase in public awareness of the need to prevent and control air pollution resulted in the passage by Congress of the Clean Air Act of 1970. Under the provisions of Section 103 of the Act, the Environmental Protection Agency (EPA) is required to conduct and promote the coordination and acceleration of research, investigations, experiments, training, demonstrations, surveys, and studies relating to the causes, effects, extent, prevention and control of air pollution.

In pursuance of these mandates, EPA awarded Contract No. 68-02-1068 to Foster D. Snell, Inc. (Snell) to undertake a System Analysis of Air Pollutant Emissions in the Chemical/Plastics Industry. The study was originally intended to deal with odors from the manufacture of plastic materials, synthetic resins and non-vulcanizable elastomers (SIC 2821). By EPA request, the study emphasis was shifted to general air pollutant emissions with attention to the hazard potential of likely emittants.

There are hundreds of products classified in SIC 2821. However, over 97% of these can be categorized within 15 principal generic groups.

Polyethylene and Copolymers
Vinyl Resins
Styrene Resins
Polypropylene
Phenolic and Other Tar Acid Resins
Polyesters
Amino Resins
Alkyds
Acrylics
Coumarone-Indene and Petroleum Resins
Polyurethanes
Cellulosics
Epoxy Resins
Polyamides
Rosin Modifications

In Sections V and VI, these are broadly defined in regard to market, production, plant location, process and potential emission characteristics, etc. Using a weighting procedure, jointly developed with EPA, these data are incorporated into a "priority decision model" to rank each group in a priority order. This system model is presented in Section VII.

The priority plastics and resins are discussed further in Section VIII. These include polyurethanes, acrylics and alkyds. In depth consideration is also given, in that section , to emission characterization and controls from the manufacture of polyvinyl chloride, polypropylene, polystyrene, nylon and polyethylene. General control technology and costs are also treated in Section VIII.

Recommendations from the system analysis appear in Section II and deal with both technical steps, as well as proposed means of developing further characterization of emissions, since the literature as well as the sources contacted generally lacked this type of information.

SECTION IV

STUDY APPROACH

SECTION IV
STUDY APPROACH

The study undertaken by Snell is titled System Analysis of Air Pollutant Emissions from the Chemical/Plastics Industry. The study was originally intended to deal with odors from the manufacture of plastic materials, synthetic resins and non-vulcanizable elastomers. By EPA request, the study emphasis was shifted to general air emissions, with attention to the hazard potential of the likely chemical species in these emissions.

The principal system analysis steps included

- definition of the industry in terms of production volumes and trends by major product, plant capacities and locations and average population densities at each plant site (Section V).

- definition of the major processes of the industry in terms of equipment, reaction conditions, specific process chemicals and quantities, products, emission points, likely emittants and general controls (Section VI).

- development of a "priority decision model" to select industry sectors for further study and to segment the industry in a possible priority order for further EPA actions; decision factors include market and production configuration by major product (total potential population exposed, population exposure potential of the average plant, plastic production volume, production growth trend), emission potential of the manufacture of each major product; and hazard potential as well as odor potential of emittants (Section VII).

- in-depth study of priority sectors and description of general emission control methods and costs (Section VIII).

- development of research and development recommendations (Section II).

These work steps were completed during the period from March 1973 through March 1974.

The work scope required that primary means of generating the required information be literature review. This was comprehensive and included a search by EPA's Air Pollution Technical Information Center. The list that follows provides examples of other sources searched:

- Chemical Abstracts, 1967 - most recent
- Air Pollution Abstracts, Vol. 1 - most recent
- Environment Information Access, Jan. 1972 - most recent
- Government Reports Index,
- Odors and Air Pollution: A Bibliography with Abstracts, EPA AP-113
- Environment Science and Technology, 1969 - present
- Pollution Engineering, 1971 - present
- Archives of Environment Health, 1967 - June 1970
- Journal of the Air Pollution Control Association, 1967 - present
- Plastics Technology, 1969 - present
- Card Catalog of the Snell collection, of the Engineering Societies Library, and of the Chemists' Club

Either letters of inquiry were sent to or phone interviews were conducted with a limited number (less than 10) of design engineering firms and states with a high concentration of plastics producers. Through the cooperation of the Manufacturing Chemists Association, a symposium-styled meeting was held with major producers interested in polyurethanes and acrylics. Four of these contacts submitted confidential detailed data. Both the literature and these contacts were useful sources of general information, but only limited data was obtained on the quantified characterization of emissions.

It is noted, particularly regarding emission data in this report, that results are not based upon statistically sufficient surveys and serve only as case illustrations.

We are grateful for the technical guidance of Dr. Belur Murthy, Project Officer. Particularly thorough inputs were provided by the following industry sources and their contribution is appreciated:

- Dr. Kenneth D. Johnson of the Manufacturing Chemists Association
- The DuPont Corporation
- The Union Carbide Corporation
- The Mobay Chemicals Corporation
- Rohm and Haas Company
- Blaw-Knox Chemical Plants, Incorporated
- Crawford & Russell, Incorporated

SECTION V

PROFILE OF THE CHEMICAL/PLASTICS INDUSTRY REGARDING MARKET, PRODUCTION, PLANT LOCATION AND POPULATION EXPOSURE FACTORS

SECTION V

PROFILE OF THE CHEMICAL/PLASTICS INDUSTRY REGARDING MARKET, PRODUCTION, PLANT LOCATION AND POPULATION EXPOSURE FACTORS

The work of this section was completed during mid-1973.

Plastics and resin materials can be classified broadly into two categories: (1) thermosets and (2) thermoplastics. Thermosets are materials which solidify or set on heating and cannot be remelted or reshaped once they have been fully cured. Thermoplastic resins can be softened by heat and regain their original properties upon cooling.

Further, these resins are divided into some 15 generic groups, within the above two categories, members of each generic group having similar chemical structure.

There are literally hundreds of plastics and resin materials produced in the United States. More than 97% of these can be categorized within the 15 principal generic groups. The remainder are either unique in structure or are produced in such low volume or by only a few producers, that they are not reported in order to keep company production data confidential.

1. OVER THE YEARS THE NUMBER OF COMPANIES PRODUCING PLASTICS AND RESIN MATERIALS HAS BEEN INCREASING

(1) The Number Of Producers Has Increased By About 700% Since 1947

According to the 1967 Census of Manufacturers, the number of producers has increased from 97 in 1947 to 391 in 1963 and an estimated 500 in 1967 and probably close to 650 in 1972.

(2) Producer's Specialization Ratio Has Decreased

The Specialization Ratio indicates the proportion of product shipments (both primary and secondary) of the industry represented by the primary products - in this case, plastics and resin materials. The Specialization Ratio has decreased steadily from 92% in 1947 to 83% in 1967 indicating that producers are diversifying and possibly integrating either backward or forward into raw material production or fabricated products.

(3) Establishment Size Has Decreased

There were more plants employing less than 20 employees in 1967 than in previous years. In 1947, only 36% of existing establishments had less than 20 employees. But, by 1967, 49% of the plants had less than this number of production workers. Companies are, therefore, probably localizing production to service nearby markets.

2. GROWTH OF SYNTHETIC RESIN PRODUCTION HAS BEEN STEADY

Production of synthetic resins for the period 1967-1972 and forecasted for 1977 is shown in Exhibits V-1 and V-2.

(1) Both Thermosets and Thermoplastics Production Have Grown

Thermoset resin production has increased from 3.1 billion pounds in 1967 to 4.1 billion pounds in 1972, a compounded annual increase of 5.6% per year.

Thermoplastics production increased from 10.7 billion pounds in 1967 to 20.4 billion pounds in 1972, a compounded annual increase of 13.8% per year.

(2) Thermoplastics Comprised 83% Of All Synthetic Resins Produced In 1972

Thermoplastics are expected to increase their share of resin production by 1977 and at that time account for about 85% of the total produced.

(3) Seven Resins Account For 90% Of Production

Exhibits V-3 and V-4 show the resin groups ranked in order of descending production volume, and as can be seen, the following seven products make up the bulk of production.

A - Polyethylene and copolymers
B - Vinyl resins
C - Styrene resins
D - Polypropylene
E - Phenolic and other tar acid resins
F - Polyesters
G - Amino resins

EXHIBIT V - 1

Environmental Protection Agency

TOTAL PLASTICS AND RESIN MATERIALS
PRODUCTION (million pounds per year) (1,2,3,4)

	1967	1968	1969	1970	1971	1972	Estimated 1977
Thermosets							
Alkyds	638	692	674	636	580	695	750
Polyesters	513	615	688	569	730	862	1,900
Epoxy Resins	135	158	166	165	169	174	200
Phenolic and Other Tar Acid Resins	983	1,097	1,181	1,186	1,194	1,413	2,230
Polyurethane	89	71	81	95	79	116	177
Amino Resins	690	816	816	746	746	804	1,100
Other	46	27	27	92	92	-	-
Total	3,094	3,476	3,633	3,489	3,590	4,064	6,377
Thermoplastics							
Acrylics	-	-	-	538	590	660	1,350
Cellulosics	171	187	193	182	174	190	200
Polyamides	63	88	92	91	100	115	175
Coumarone-Indene and Petroleum Hydrocarbons	284	349	357	283	264	325	325
Polyethylene and Copolymers	3,799	4,568	5,490	5,844	6,381	7,624	15,300
Rosin Modifications	134	86	86	87	87	95	90
Polypropylene	662	878	1,090	1,031	1,288	1,755	3,500
Styrene Resins	2,391	2,896	3,343	3,550	3,748	4,479	9,000
Vinyl Resins	2,671	3,216	3,686	3,756	4,076	5,186	8,300
Other	520	606	676	324	-	-	-
Total	10,695	12,874	15,013	15,686	16,708	20,429	38,240
All Resins: Grand Total	13,789	16,350	18,646	19,175	20,298	24,493	44,617

EXHIBIT V-2
Environmental Protection Agency
PLASTIC AND RESIN MATERIALS PRODUCTION
1964 - 1972 and 1977 (Projected)

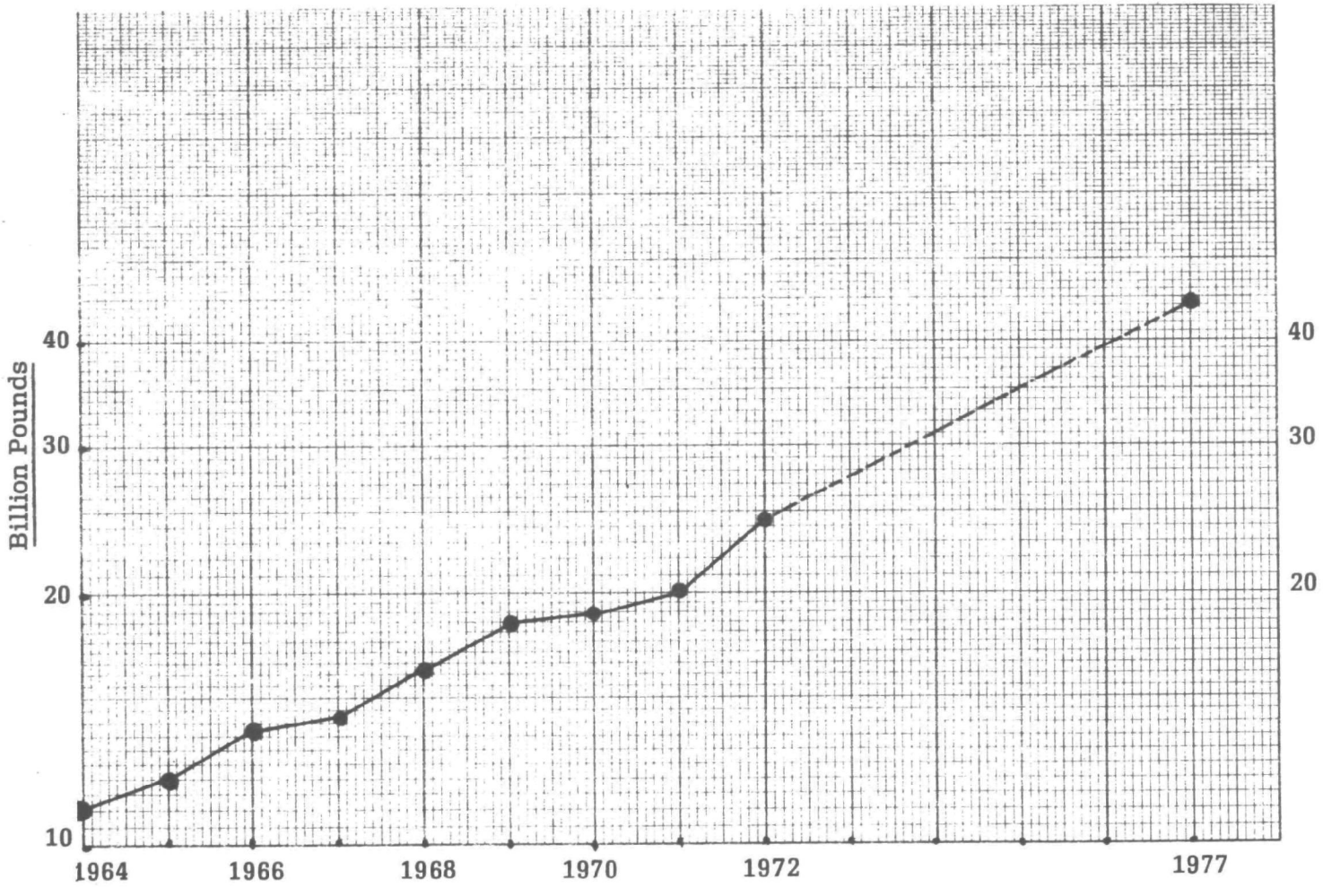

Source: Exhibit V-1 and Snell estimates (mid-1973)

EXHIBIT V - 3

Environmental Protection Agency

PLASTIC AND RESIN PRODUCTION
RANKED IN ORDER OF VOLUME

Resin	Production (million pounds) 1970	1971	1972
Polyethylene and Copolymers	5,844	6,381	7,624
Vinyl Resins	3,756	4,076	5,186
Styrene Resins	3,550	3,748	4,479
Polypropylene	1,031	1,288	1,755
Phenolic and Other Tar Acid Resins	1,186	1,194	1,413
Polyesters	569	730	862
Amino Resins	746	804	851
Alkyds	636	580	695
Acrylics	538	590	660
Coumarone-Indene and Petroleum Resins	283	265	325
Cellulosics	182	174	190
Epoxy Resins	165	169	174
Polyurethanes	95	79	116
Polyamides (Nylon)	91	100	115
Rosin Modifications	87	87	95
Other	416	-	-
Total	19,175	20,298	24,493

Source: Exhibit V-1

EXHIBIT V - 4

Environmental Protection Agency

INDIVIDUAL RESINS AS PERCENT OF TOTAL 1972 PRODUCTION

Resin	Percent of Total Production	Accumulated Percent
Polyethylene and Copolymers	31.1	31.1
Vinyl Resins	21.2	52.3
Styrene Resins	18.3	70.6
Polypropylene	7.2	77.8
Phenolic and Other Tar Acid Resins	5.8	83.6
Polyesters	3.5	87.1
Amino Resins	3.5	90.6
Alkyds	2.8	93.4
Acrylics	2.7	96.1
Coumarone-Indene and Petroleum Resins	1.3	97.4
Cellulosics	0.8	98.2
Epoxy Resins	0.7	98.9
Polyurethanes	0.5	99.4
Polyamides	0.5	99.9
Rosin Modifications	0.4	
Other	-	
Total	100.3*	100.3*

*Does not add to 100.0% because of rounding errors.

Source: Exhibit V-3 and Snell estimates

(4) Raw Material Supplies Are Coming Under Pressure

Many of the largest volume resins are based on petroleum, and shortages will develop as evidenced by the present energy crisis. For example, benzene is presently in critical supply and it is the starting material for styrene plastics.

Competition for petroleum, as an energy source, will probably cause some shortages also.

(5) By 1977 It Is Expected That Production Of All Plastics Will Reach 44.6 Billion Pounds

Production will probably increase at the rate of 12.7% through 1972-1977.

3. ADDITIONAL PLANT CAPACITIES WILL BE REQUIRED FOR ALMOST ALL RESINS PRODUCED AFTER 1974

(1) Most Producers Of Major Plastics Are Installing Additional Capacity

Major producers of large volume resins are already installing additional capacity, but this will not be sufficient to meet needs much beyond 1977. This assumes that feedstocks will be available.

(2) Present Facilities Will Probably Be Enlarged

The large volume resins are being made at or close to a source of raw materials.

Petroleum refineries and crackers will probably remain located at locations close to ports or near pipe lines.

V-A POLYETHYLENE AND COPOLYMERS

Polyethylene (PE) resins are themoplastics containing, predominantly; repeating ethylene groups. The molecular weights of the PE resins varies over a wide range, from wax-like materials of relatively low molecular weight (10,000 - 25,000) to rigid and tough plastics of ultra-high molecular weight (2,000,000 - 4,000,000) with densitites ranging from 0.91-0.93 (low to medium) and 0.94-0.97 (high).

1. POLYETHYLENE IS THE LARGEST PRODUCED POLYMER

Domestic production of PE increased from 3.8 billion pounds in 1967 to 7.6 billion pounds in 1972, a compounded growth rate of 14.9% per year. In 1972, however, production increased 19.5% over the previous year. Yearly production for the period 1967-1972 is shown in Exhibit V-1.

PE Consumption Will Continue To Grow At Above Normal Growth Rate

Increasing use in packaging, molding, and construction should provide a growth of about 15% per year over the near term.

2. THERE ARE 18 PRODUCERS OF POLYETHYLENE

The 18 producers operate 25 plants. Exhibit V-A lists the locations and plant capacities of the producers.

(1) PE Production Is Concentrated In Two States

The Gulf Coast area, more specifically the states of Texas and Louisiana, produces over 80% of the PE at 20 plant locations. The reason for this heavy concentration is that the raw material (ethylene) is produced in this area. The remaining 4 plants are located relatively close to consumers.

(2) Plant Capacities Vary Widely

Plant capacities range from a high of 1.2 billion pounds per year to as small as 100 million pounds per year or less. The tendency is to enlarge existing facilities, rather than build new grass roots plants.

EXHIBIT V-A

Environmental Protection Agency
PRODUCERS: POLYETHYLENE [4,5]

Producer and Location	Estimated Capacity (1975) High Density (million pounds)	Estimated Capacity (1975) Low Density (million pounds)
Allied Chemical Corp.		
Baton Rouge, La.	225	
Amoco Chemicals Corp.		
Alvin, Tex.	100	
Celanese Corp.		
Pasadena, Tex.	375	
Chemplex Co.		
Clinton, Iowa	125	310
Cities Service Co.		
Lake Charles, La.		220
The Dow Chemical Co.		
Freeport, Tex.	100	300
Plaquemine, La.	225	500
E. I. Du Pont de Nemours & Co., Inc.		
Orange, Tex.	200	520
Victoria, Tex.		150
Eastman Kodak Co.		
Longview, Tex.		250
Exxon Chemical Co.		
Baton Rouge, La.		400
Gulf Oil Corp.		
Orange, Tex.	150	500
Cedar Bayou, Tex.		200
Monsanto Co.		
Texas City, Tex.	180	
National Distillers and Chemical Corp.		
Deer Park, Tex.		300
Tuscola, Ill.		150
National Petro Chemicals Corp.		
La Porte, Tex.	270	
Northern Petrochemical Co.		
Joliet, Ill.		500
Phillips Petroleum Co.		
Pasadena, Tex.	250	94
Rexene Polymers Co.		
El Paso, Tex.		310
Sinclair-Koppers Co.		
Port Arthur, Tex.	200	100
Union Carbide Corp.		
Seadrift, Tex.	400	750
Texas City, Tex.		225
Torrence, Calif.		120
Whiting, Ind.		240
Total	2,800	6,139

Total Polyethylene Capacity: 8,939

V-B VINYL RESINS

PVC and its copolymers (vinyl chloride content varies from 85% to 97%) are the most important of the vinyl resins. They are produced by emulsion or suspension polymerization of vinyl chloride alone or with a comonomer such as vinyl acetate, vinylidene chloride, etc. They can be used alone or as a highly plasticized (as much as 75% plasticizer) form.

Polyvinyl acetate (PVAc), and to a lesser extent polyvinyl alcohol (PVA) are important resins included in the vinyl group. PVAc is made by polymerizing vinyl acetate in a manner similar to vinyl chloride polymerization. PVA is made by the hydrolysis of PVAc.

Other vinyl resins include PVC copolymers containing less than 50% vinyl chloride, polyvinyl butyral, polyvinyl formal and small amounts of polyvinyl ethers.

1. VINYL RESINS ARE THE SECOND LARGEST PRODUCED POLYMER GROUP

Domestic production of vinyl resins for 1967-1972 increased from 2.7 billion pounds in 1967 to 5.2 billion pounds in 1972, a compounded growth rate of 14.0% per year. In 1972, however, production increased 27.2% over the previous year. Yearly production for the period 1967-1972 is shown in Exhibit V-1.

Vinyl Resins Will Continue To Grow At Above Normal Growth Rates

Vinyl resins are finding increased usage in the construction industry and much of this growth will, therefore, depend upon total economic growth. This anticipated growth will also depend upon resin supply in 1973, but with new plant constructions underway, supply to sustain this growth should be adequate by 1974.

2. THERE ARE ABOUT 22 PRODUCERS OF POLYVINYL CHLORIDE

These 22 producers operate some 37 plants with a total capacity of about 6 billion pounds per year. Exhibit V-B1 lists producers, plant locations and company capacities by 1974. In some instances individual plant capacities are unavailable.

EXHIBIT V-B1

Environmental Protection Agency
PRODUCERS: POLYVINYL CHLORIDE [6]

Producer and Location		Estimated Capacity in 1974 (million pounds)
The B.F. Goodrich Co.		875
Niagara Falls, N.Y.		
Salem County, N.J.		
Calvert City, Ky.		
Avon Lake, O.		
Long Beach, Calif.		
Continental Oil Co.		380
Pawtucket, R.I.		
Assonet, Mass.		
Oklahoma City, Okla.	(180)	
Diamond Shamrock Corp.		520
Delaware City, Del.	(220)	
Deer Park, Tex.	(300)	
Union Carbide Corp.		320
Institute, W.Va.		
Charleston, W.Va.		
Texas City, Tex.		
Borden Inc.		345
Leominster, Mass.	(145)	
Illiopolis, Ill.	(200)	
The Firestone Tire & Rubber Co.		400
Pottstown, Pa.		
Perryville, Md.		
Tenneco Inc.		520
Fleming, N.J.	(100)[4]	
Burlington, N.J.	(120)[4]	
Pasadena, Tex.	(300)[4] (by 1974)	
The Goodyear Tire & Rubber Co.		300
Plaquemine, La.	(200)[4]	
Niagara Falls, N.Y.	(80)[4]	
Occidental Petroleum Corp.		420
Burlington Township, N.J.		
Rubintech, Inc.		450
Gulf Coast	(200)[4]	
Painesville, O. (former Allied)	(250)[4]	
Air Products & Chemicals, Inc.		170
Calvert City, Ky.		50
Pensacola, Fla.		
Stauffer Chemical Co.		150
Delaware City, Del.		
Ethyl Corp.		150
Baton Rouge, La.		
Olin Corp.		150
Assonet, Mass.		
Uniroyal, Inc.		130
Painesville, O.		

EXHIBIT V-B1 (continued)

Environmental Protection Agency
PRODUCERS: POLYVINYL CHLORIDE [6]

Producer and Location	Estimated Capacity in 1974 (million pounds)
Pantasote Co. Pt. Pleasant, W. Va.	120
American Chemical Corp. Long Beach, Calif.	150
General Tire & Rubber Co. Ashtabula, O.	100
Great American Chemical Corp. Fitchburg, Mass.	70
Keysor-Century Corp. Saugus, Calif.	50
Georgia-Pacific Corp. Plaquemine, La.	220
National Starch Meredosia, Ill.	10
Total	6,050

(1) PVC Production Facilities Are Concentrated In The Midwest, Gulf Coast And On The Northeast Coast

PVC producers have located plants either close to the market place or close to raw material supply. The larger producers are also basic in monomer production.

(2) Plant Capacities Vary Over A Narrow Range

While total company capacities vary considerably, the average plant size is estimated to be about 200 million pounds per year.

3. THERE ARE OVER 100 PRODUCERS OF POLYVINYL ACETATE

There are 9 relatively large producers of PVAc operating 31 plants in the U.S. with an estimated capacity of 325 million pounds per year. In most instances individual plant capacities are unavailable. Exhibit V-B2 lists major producers, plant locations and some company capacities. The many smaller producers and plant locations are listed in Appendix 1.

(1) PVAc Production Facilities Are Scattered Throughout The U.S.

The preponderance of plants to make PVAc is due to its prime end uses -- in paints and adhesives. Many paint and adhesive manufacturers make their own PVAc and these industries are located to serve local markets at population centers.

(2) Plant Capacities Are Relatively Small

Plant capacities can vary from about 40 million pounds per year to about 1 million pounds. The larger manufacturers probably average 15-20 million pounds per year.

4. THERE ARE 3 PRIME PRODUCERS OF POLYVINYL ALCOHOL

The 3 prime producers operate plants at 4 locations and will have an operating capacity of slightly over 272 million pounds per year by the end of 1973. Exhibit V-B3 lists producers, plant locations and capacities where available.

EXHIBIT V-B2

Environmental Protection Agency
PRODUCERS: POLYVINYL ACETATE[7,8]

Producer and Location		Capacities (million pounds)
Air Products & Chemicals, Inc.		25
Cleveland, O.		
Elkton, Md.		
City of Industry, Calif.		
Calvert City, Ky.	(20)	
Borden Inc.		40
Bainbridge, N.Y.		
Compton, Calif.		
Leominster, Mass.		
Illiopolis, Ill.		
Demopolis, Ala.		
Celanese Corp.		25
Louisville, Ky.		
Belvidere, N.J.		
Newark, N.J.		
W.R. Grace & Co.		25
Cambridge, Mass.		
Owensboro, Ky.	(10)	
Acton, Mass.		
E.I.Du Pont de Nemours & Co., Inc.		50
Toledo, O.		
Niagara Falls, N.J.		
National Starch and Chemical Corp.		55
Plainfield, N.J.		
Meredosia, Ill.		
Reichhold Chemicals, Inc.		40
Charlotte, N.C.		
Elizabeth, N.J.		
Morris, Ill.		
Kansas City, Kans.		
South San Francisco, Calif.		
Tacoma, Wash.		
Jacksonville, Fla.		
Azusa, Calif.		
Monsanto Co.		40
Springfield, Mass.		
Union Carbide Corp.		
Institute, W.Va.		
S. Charleston W.Va.		25
Gardena, Calif.		
	Total	325

Other reported producers[8] are listed in Appendix 1.

EXHIBIT V - B3

Environmental Protection Agency

PRODUCERS: POLYVINYL ALCOHOL [9]

Producers	Capacity (Million pounds) 1972	1973
E.I. Du Pont de Nemours & Co., Inc.		
Niagara Falls, N.Y.	25	-
La Porte, Texas	-	100
Air Products & Chemicals, Inc.		
Calvert City, Ky.	30	30+
Monsanto Company		
Springfield, Mass.	12	142+
Total Capacity	67	272+

Note: Borden,Inc. has a 8 million lb/year plant on standby at Leominster, Mass.

PVA Plant Capacities Vary Considerably

Plant capacities have, in the past, been relatively small -- on the order of 15 -25 million pounds per year. The newest plant which will be on stream in 1973, however, will have a rated capacity of 100 million pounds per year.

5. THERE ARE SEVERAL ESTABLISHMENTS PRODUCING OTHER VINYL RESINS

The principal "other" vinyl resin produced is polyvinyl butyral. This resin, and several others, is generally produced at the same locations as PVA and/or PVAc. Prime producers are Monsanto Co., E.I. Du Pont de Nemours Co., Inc., and Dow Chemical Co.

V-C STYRENE RESINS

Polystyrene is manufactured by polymerizing styrene monomers, then forming pellets by an extrusion process.

Polystyrene copolymers include acrylonitrile-butadiene-styrene (ABS), styrene-acrylonitrile (SAN), styrene-butadiene, styrene-divinyl benzene and styrene-rubber.

For reporting purposes, the U.S. Tariff Commission has divided these resins into two categories: (1) polystyrene and copolymers, and (2) ABS and SAN.

1. STYRENE RESINS ARE HIGH VOLUME PRODUCTS

Domestic production of polystyrene resins increased from 2.4 billion pounds per year in 1967 to 4.5 billion pounds in 1972, a compounded growth rate of 13.4% per year. In 1972 production increased 19.5% over the previous year. Yearly production for the period 1967-1972 is shown in Exhibit V-1.

Polystryene Resin Production Grew At A Faster Rate Than ABS-SAN Resins

Of the total 4,479 million pounds of styrene resins produced in 1972, 81% or 3,643 million pounds was polystyrene and its copolymers, the remainder being ABS and SAN resins. Polystyrene growth in 1972 over the preceding year was about 22%, while ABS-SAN resins grew 9.7%. In anticipation of these growing markets, producers are planning major plant capacity expansions.

2. THERE ARE SOME 21 LARGE PRODUCERS OF STYRENE RESINS

Of these 21 producers, 4 produce both polystyrene and ABS-SAN resins; 14 produce only polystyrene, and 3 produce only ABS-SAN resins. These 21 producers have production facilities at some 42 locations throughout the U.S. Major plant locations, producers and capacities are listed in Exhibit V-C. Other reported producers are listed in Appendix 1.

(1) Production Facilities Are Concentrated In Two Geographic Regions

While a few plants are located in California and Texas, the majority of the large plants are located in the Midwest and Northeastern regions of the U.S. Major markets for these resins are located in these areas.

(2) Production Facilities Tend To Be Of Medium Size

The majority of the plants appear to be sized at about 100 million to 200 million pounds per year. There are, however, a large number of plants smaller than 50 million pounds.

EXHIBIT V-C

Environmental Protection Agency
PRODUCERS: STYRENE RESINS[4, 11, 14]

Producer and Location	Estimated Capacity, 1973 (million pounds) ABS - SAN	Polystyrene and Copolymers
The Dow Chemical Co.		980
Joliet, Ill.	-	x
Torrence, Calif.	20	x
Midland, Mich.	105	x
Ironton (Hungry Rock), O.	-	x
Riverside (Pevaly), Mo.	-	x
Allyn's Point, Conn.	65	x
Monsanto Co.		400
Addyston, O.	270	x
Springfield, Mass.	-	x
Long Beach, Calif.	-	x
Foster Grant Co., Inc.		
Leominster, Mass.	-	155
Peru, Ill.	-	195
Cosden Oil & Chemical Co.		300
Calumet City, Ill.	-	x
Big Spring, Tex.	-	x
Sinclair-Koppers Co.		
Kobuta, Pa.	-	300
Union Carbide Corp.		280
Marietta, O.	-	x
Bound Brook, N.J.	35	x
Amoco Chemicals Corp.		280
Medina, O.	-	x
Willow Springs, Ill.	-	x
Leominster, Mass.	-	x
Torrence, Calif.	-	x
United States Steel Corp.		
Haverhill, O.	-	200
BASF Wyandotte Corp.		
Jamesburg, N.J.	-	130
Rexene Polymers Co.		130
Joliet, Ill.	50	x
Holyoke, Mass.	-	x
Ludlow, Mass.	-	x
Santa Ana, Calif.	-	x
Shell Chemical Co.		130
Marietta, O.	-	x
Belpre, O.	-	x
Polysar		
Leominster, Mass.	-	100
Forest City, N.C.	-	25
Uniroyal, Inc.	200+	
Baton Rouge, La.	x	-
Scotts Bluff, La.	x	-

EXHIBIT V-C (continued)

Environmental Protection Agency
PRODUCERS: STYRENE RESINS[4,11,14]

Producer and Location	Estimated Capacity, 1973 (million pounds) ABS - SAN	Polystyrene and Copolymers
The B.F. Goodrich Co.		
Louisville, Ky.	30	-
Borg-Warner Corp.		
Ottawa, Ill.	200	-
Washington, W.Va.	260	-
Diamond Plastics, Inc.		
Long Beach, Calif.	-	50
Gordon Chemical Co., Inc.		40
Oxford, Mass.	-	x
Worcester, Mass.	-	x
Petrochemical Investment Corp.		
Houston, Tex.	-	50
The Richardson Co.		
West Haven, Conn.	-	35
U.S. Industries	-	50
A & E Plastik Pak, Inc.	-	45
City of Industry, Calif.		
Total	1,235+	3,875

Grand Total for Styrene Resins: 5,110+ million pounds per year

Note: x denotes production at this location, but capacity is not known.
Other reported producers [8] are listed in Appendix 1.

V-D POLYPROPYLENE

Polypropylene resins (PP) are thermoplastic resins containing, predominantly, repeating propylene units. PP is produced by heterogeneous polymerization of propylene dissolved in hydrocarbons. Occasionally, propylene is copolymerized with small amounts of ethylene to improve low temperature impact properties.

1. POLYPROPYLENE IS BECOMING A COMMERCIALLY SIGNIFICANT PRODUCT

In 1972, PP production increased 36% over the previous year and almost doubled the average growth rate of 21% for the period of 1967-1972. PP production in 1972 was 1.8 million pounds as compared to 0.7 million pounds in 1967. Exhibit V-1 shows yearly production volume for the period 1967-1972.

PP Growth Will Continue At Above Normal Growth Rate

While it is not expected that the growth rate shown for the past year will continue, industry sources believe that a 15% average growth rate over the near future should not be discounted. It is also expected that PP copolymers will take an increasing share of the market, and may in time be dominant over homopolymers.

2. NINE PRODUCERS ACCOUNT FOR THE ENTIRE PRODUCTION OF POLYPROPYLENE

These 9 producers presently operate at 10 locations. However, one of these producers has been erecting a new plant to be on stream by December 1974. Plant locations and production capacities are listed in Exhibit V-D.

(1) The Majority Of Production Facilities Are Located On The Gulf Coast

Over 70% of the production capacity is located in Louisiana and Texas. Three producers, one each in W. Virginia, Delaware and New Jersey, account for the remainder. The major share of the new capacity will be coming on the Gulf and will increase this region's capacity to just under 75% of the total.

EXHIBIT V-D

Environmental Protection Agency

PRODUCERS: POLYPROPYLENE [12]

Producer	Plant Location	Capacity Apr.'73 (Million pounds/year)	Increases by Dec. '74 (Million pounds/year)
Hercules, Inc.	Lake Charles, La.	600	150
	Bayport, Tex.	-	200
Amoco Chemicals Corp.	New Castle, Del.	250	-
	Chocolate Bayou, Tex.	150	100
Exxon Chemical Co.	Baytown, Tex.	300	-
Shell Chemical	Woodbury, N.J.	250	-
Rexene Polymers, Co.	Odessa, Tex.	130	-
Novamont Corp.	Neal, W.Va.	120	40
Texas Eastman Co.	Longview, Tex.	100	-
Diamond Shamrock Corp.	Deer Park, Tex.	90	-
Phillips Petroleum Co.	Pasadena, Tex.	85	-
Total		2,075	490
Total Capacity by 1974		2,565	

(2) Plant Capacities Vary Over A Wide Range

Plant size varies tremendously from the smallest with a capacity of 85 million pounds per year to the largest with a capacity of 750 million (when complete in 1974). The majority, however, range from 100 to 300 million pounds per year.

V-E PHENOLIC AND OTHER TAR ACID RESINS

Phenolic resins are thermosetting resins formed by the reaction of phenol with aldehydes. The properties of the final product can be varied widely by choice and ratio of reactants and by reaction conditions. Phenols can be replaced by other tar acids to produce products with different properties, but these too result in insoluble, infusible thermoset products.

1. PHENOLIC PRODUCTION HAS INCREASED AT AN AVERAGE ANNUAL RATE OF 7.5% FOR THE PAST 5 YEARS

As shown in Exhibit V-1, phenolic resin production increased from 983 million pounds in 1967 to about 1,413 million pounds in 1972, an average compound growth rate of 7.5% per year. This growth rate has not been consistent but has steadily been increasing so that 1972 production was 18% over the previous year.

Overall Growth For The Next 5 Years Will Approach That Of The Past 5 Year Period

The large growth exhibited by phenolics in 1972 was due largely to growth in the appliance market and plywood industry. Continued growth will depend upon the general economic climate of the country and supplies of wood for the plywood industry. Growth is expected to continue at the rate of 10 - 12% over the next 5 years.

2. THERE ARE NUMEROUS PHENOLIC RESIN PRODUCERS

The major producers operate plants at 47 locations throughout the United States and are shown in Exhibit V-E. An additional 71 companies operate an additional 121 plants. These producers and plant locations are listed in Appendix 1.

(1) Plants Are Concentrated In Areas Of Consumer Demand

The principal uses are molding, adhesives, thermal insulation and plywood. As such, plants are located near plywood producers (Oregon, California and the South), molders (Midwest and East Coast) and adhesive producers (metropolitan or highly populated areas).

EXHIBIT V-E

Environmental Protection Agency
PRODUCERS: PHENOLICS [13]

Producer and Location	Capacity 1/172 (million lbs)
Ashland Oil, Inc.	60
Pensacola, Fla.	
Thomasville, N.C.	
Bethel, Conn.	
Fords, N.J.	
Newark, N.J.	
Calumet City, Ill.	
Paramount, Calif.	
Borden Inc.	40
Compton, Calif.	
Fremont, Calif.	
Kent, Wash.	
La Grande, Ore.	
Missoula, Mont.	
Springfield, Ore.	
Berkeley, Calif.	
Sheboygan, Wisc.	
Bainbridge, N.Y.	
Diboli, Tex.	
Fayetteville, N.C.	
General Electric Co.	90
Schenectady, N.Y.	
Pittsfield, Mass.	
Occidental Petroleum Corp.	300
Kenton, O.	
North Tonawanda, N.Y.	
Monsanto Co.	110
Alvin (Chocolate Bayau), Tex. (30) (4)	
Addyston (Port Plastics), O. (60) (4)	
Eugene, Ore.	
Seattle, Wash.	

Producer and Location	Capacity 1/1/72 (million lbs)
Plastics Engineering Co.	75
Sheboygan, Wisc.	
Reichhold Chemicals, Inc.	360
Charlotte, N.C.	
Moncure, N.C.	
Houston, Tex.	
Tuscaloosa, Ala.	
Andover, Mass. (4)	
Carteret, N.J. (20)	
Elizabeth, N.J.	
Niagara Falls, N.Y.	
Detroit (Ferndale), Mich.	
Kansas City, Kans.	
Azusa, Calif.	
South San Francisco, Calif.	
Tacoma, Wash.	
White City, Ore.	
Simpson Timber Co.	40
Portland, Ore.	
Union Carbide Corp.	190
Texas City, Tex.	
Bound Brook, N.J.	
Marietta, O. (4)	
Elk Grove, Calif. (25) (4)	
Sacramento, Calif. (25)	
Total Capacity	1,265

Other reported Phenolic resin producers [8] are listed in Appendix 1.

(2) Plant Size Varies Widely

There are a few large plants with capacities of over 150 million pounds per year. But judging from total company capacity, and the number of producing locations per company, the average plant size is probably in the order of 20 - 30 million pounds per year. Small plants with capacities of less than 1 million pounds are also numerous.

V-F POLYESTERS

Many different resins are called polyesters, including alkyds and unsaturated polyester resins. This section is concerned with the unsaturated polyesters.

These unsaturated polyester resins are based on unsaturated prepolymers, which are made by the esterification of dihydric alcohols (glycols) with unsaturated and modifying dibasic acids and/or anhydrides. The unsaturated prepolymer is dissolved in an unsaturated monomer (e.g. styrene) with which it cross-links to form the ultimate polymer.

1. POLYESTERS RANK SIXTH IN TOTAL VOLUME PRODUCED

Domestic production of polyester in 1972 increased a healthy 18% over 1971, although this growth was not as large as the increase observed in 1971. Production has grown from 513 million pounds in 1967 to 862 million pounds in 1972, a compounded growth rate of 10.9% per year, and is shown in Exhibit V-1.

Polyester Consumption Is Expected To Grow At A Higher Than Normal Rate

Growth of these resins is tied closely with the construction, transportation and recreation industries. With the boom in the building trade, increasing use in truck body construction, modular building fabrication and fiber-glass marine craft and accessories, production of polyesters is expected to grow at a rate of 15 - 20% for the near future period.

2. THE BULK OF POLYESTER PRODUCTION IS ACCOUNTED FOR BY 33 COMPANIES

These 33 companies operate at over 80 locations as shown in Exhibit V-F.

EXHIBIT V - F

Environmental Protection Agency
PRODUCERS: POLYESTERS [4,8,14]

Producer and Location	Plant Capacity (million pounds)
Allied Chemical Corp.	
Des Plaines, Ill.	
Los Angeles, Calif.	
Toledo, O.	
Whippany, N.J.	
Moncure, N.C.	25
Alpha Chemical Corp.	
Colliersville, Tenn.	
Kathleen, Fla.	
American Cyanamid Co.	
Azusa, Calif.	
Perrysville, O.	
Wallingford, Conn.	
Ashland Oil Inc.	
Los Angeles, Calif.	
Newark, N.J.	
Pensacola, Fla.	30
Valley Park, Mo.	15
Atlas Chemical Industries, Inc.	
Wilmington, Del.	
Cargill, Inc.	
Lynwood, Calif.	
Cook Paint & Varnish Co.	
Detroit, Mich.	
Hialeah, Fla.	
Milpitas, Calif.	
North Kansas City, Mo.	
De Soto, Inc.	
Berkeley, Calif.	
Chicago Heights, Ill.	
Garland, Tex.	
Diamond Shamrock Corp.	
Oxnard, Calif.	
Redwood City, Calif.	
H. H. Robertson Co.	
Saukville, Wisc.	
General Electric Co.	
Mt. Vernon, Ind.	
Schenectady, N.Y.	
P. D. George Co.	
St. Louis, Mo.	
W. R. Grace & Co.	150
Bartow, Fla.	20
Linden, N.J.	20
Montebello, Calif.	10
Swanton, O.	50
Jacksonville, Ark.	45
Guardsman Chemical Coatings, Inc.	
Grand Rapids, Mich.	
Inmont Corp.	
Greenville, O.	
Cincinnati, O.	
Detroit, Mich.	
Interplastic Corp.	
Minneapolis, Minn.	70
Pryor, Okla.	30
Koppers Co., Inc.	
Bridgeville, Pa.	30
Richmond, Calif.	
Molded Fiber Glass Companies, Inc.	45
Ashtabula, O.	
Occidental Petroleum Corp.	
North Tonawanda, N.Y.	
Baton Rouge, La.	
Owens-Corning Fiberglas Corp.	90
Anderson, S.C.	50
Valpariso, Ind.	40
PPG Industries, Inc.	
Circleville, O.	
Houston, Tex.	
Springdale, Pa.	
Torrence, Calif.	
Reichhold Chemicals, Inc.	200
Azusa, Calif.	
Detroit, Mich.	
Elizabeth, N.J.	30+
Grand Junction, Tenn.	
Houston, Tex.	
Jacksonville, Fla.	
South San Francisco, Calif.	
Tacoma, Wash.	

Environmental Protection Agency
PRODUCERS: POLYESTERS [4,8,14]

Producer and Location	Plant Capacity (million pounds)
Resinous Chemicals, Corp.	
Linden, N.J.	
Rohm and Haas Co.	
Knoxville, Tenn.	
Philadelphia, Pa.	
SCM Corp.	
Chicago, Ill.	
Cleveland, O.	
Huron, O.	
Reading, Pa.	
San Francisco, Calif.	
Schenectady Chemicals, Inc.	
Schenectady, N.Y.	
The Sherwin-Williams Co.	
Cleveland, O.	
Emeryville, Calif.	
The Standard Oil Co. (Ohio)	42
Hawthorne, Calif.	30
Covington, Ky.	12
Stepan Chemical Co.	
Anaheim, Calif.	
United Merchants & Manufacturers, Inc.	
Langley, S.C.	
VWR United Corp.	
Newark, O.	
Portland, Ore.	
Richmond, Calif.	
Westinghouse Electric Corp.	
Manor, Pa.	
Whittaker Corp.	
Lenoir, N.C.	
Minneapolis, Minn.	
Colton, Calif.	

(1) Five Producers Reportedly Account For 50% Of Production

Producer, and more specifically individual plant capacities are confidential. Where possible we have indicated plant or producer capacity based on industry and literature references. According to Chemical Economics Handbook[14], industry concentration in 1968 was approximately as follows:

Percent of 1968 Production Accounted For By . . .	
3 largest producers	40%
5 largest producers	50%
10 largest producers	70%
15 largest producers	85%
20 largest producers	95%

The three largest producers are believed to be W.R. Grace & Co., PPG Industries, Inc. and Reichhold Chemicals, Inc.

(2) Individual Plant Capacities Are Highly Flexible

Production economics are such that plants operate on a 24 hour basis, processing 2 batches per day per reactor. The smallest economically feasible batch size would be about 500 gal., while several of the larger plants have multiple 5,000-6,000 gal. reactors. Plant capacities could, therefore, vary from about 1 million pounds to over 70 million pounds per year.

Another consideration that must be taken into account is the interchangeability of products produced. For example, alkyds and polyesters can be made in the same equipment. Comparing polyester plant locations with alkyd plant locations confirms this.

(3) Plants Are Geographically Widely Dispersed But Tend To Locate Near Populated Areas And Markets

A rough estimate of the geographic distributions of the markets is as follows[14]:

Midwest States	40%
Far Western States	20%
Southwestern States	15%
New England and Middle Atlantic States	13%
Southeastern States	12%

V-G AMINO (U-F and M-F) RESINS

Amino resins are principally resins made by condensing formaldehyde with urea or melamine. Other amino resins include: aniline-formaldehyde, guanamines and ethylene-urea-formaldehyde condensation products.

1. AMINO RESIN PRODUCTION HAS INCREASED STEADILY OVER THE PAST 5 YEARS

Amino resin production has increased from 690 million pounds in 1967 to 851 million pounds in 1972. This is an average annual growth of 4.4% per year. Growth for 1972 was slightly better than this at 5.8%. Production for the period 1967-1972 is shown in Exhibit V-1.

Amino Resin Consumption Is Expected To Grow 5-6% Over The New Term

Amino resin usage has benefited by the increases in bonding and adhesives markets, which in turn have benefited from high levels of activity in the building industries. Molding applications, however, declined somewhat.

2. THERE ARE 82 AMINO RESIN PRODUCERS

These 82 producers operating at 165 locations in the United States are listed in Exhibit V-G. It is interesting to note that these amino resin plants operate at the same locations that phenolic resins are produced. This is typical since their major end uses compete.

We Believe Amino Resin Production Capacity To Be Similar To Phenolic Resin Capacity

In many instances, literature refers to construction of phenolic/urea-formaldehyde resin plants. Both products are produced in similar manners, and equipment would probably be interchangeable. Therefore, average plant production capacity for amino resins would probably be in the range of 20-30 million pounds per year, with many small plants having capacities of less than 1 million pounds per year.

EXHIBIT V - G
Environmental Protection Agency
PRODUCERS : AMINO RESINS [8]

Allied Chemical Corp., Toledo, O.
American Alkyd Industries, Carlstadt, N.J.
American Cyanamid Co., Wallingford, Conn.
Evandale, O.
Charlotte, N.C.
Azusa, Calif.
Apex Chem. Co., Inc. Elizabethport, N.J.
Ashland Oil, Inc., Fords, N.J.
Calumet City, Ill.
Thomasville, N.C.
Paramount, Calif.
The Bendix Corp., Troy, N.Y.
Borden, Inc., Bainbridge, N.Y.
Compton, Calif.
Freemont, Calif.
Kent, Wash.
La Grande, Ore.
Missoula, Mont.
Springfield, Ore.
Sheboygan, Wisc.
Deboli, Tex.
Fayetteville, N.C.
Brown Co., Gorham, N.H.
CPC International, Inc., Forest Park, Ill.
Charlotte, N.C.
Cargill, Inc., Carpentersville, Ill.
Philadelphia, Pa.
Lynwood, Calif.
Celanese Corp., Newark, N.J.
Louisville, Ky.
Chemical Prods. Corp., E. Paterson, N.J.
Clark Oil & Refining Corp., Blue Island, Ill.
Tewksbury, Mass.
Commercial Products Co., Hawthorne, N.J.
Cook Paint & Varnish Co., Detroit, Mich.
N. Kansas City, Mo.
Dan River Mills, Inc., Danville, Va.
De Paul Chem. Co., Inc., Long Island City, N.Y.
De Soto, Inc., Chicago Heights, Ill.
Garland, Tex.
Berkeley, Calif.
The Duplan Corp., Brodhead, Wisc.
Eastern Color & Chem. Co., Providence, R.I.
Emkay Chem. Co., Elizabeth, N.J.
FMC Corp., Fredericksburg, Va.
GAF Corp., Chattanooga, Tenn.
General Electric Co., Pittsfield, Mass.
Georgia-Pacific Corp., Coos Bay, Ore.
Columbus, O.
Crossett, Ark.
Louisville, Miss.
Lufkin, Tex.
Conway, N.C.
Savannah, Ga.
Guardsman Chem. Coating Inc., Grand Rapids, Mich.
Gulf Oil Corp., Shawano, Wisc.
Alexandria, La.
High Point, N.C.
W. Memphis, Ark.
Lansdale, Pa.
H & N Chem. Co., Totowa, N.J.
The Hanna Paint Mfg. Co., Inc., Columbus, O.
Hart Products Corp., Jersey City, N.J.
Hercules, Inc., Portland, Ore.
Eugene, Ore.
Tacoma, Wash.
Chicopee, Mass.
Milwaukee, Wisc.
Savannah, Ga.
E. F. Houghton & Co., Philadelphia, Pa.
Inter-Pacific Resins, Inc., Sweet Home, Ore.
Ironsides Resins Inc., Columbus, O.
Koppers Co., Inc., Bridgeville, Pa.
Lancaster Chem. Corp., Wilmington, Del.
Millmaster Onyx Corp., Lyndhurst, N.J.
Minnesota Mining & Mfg. Co., Decatur, Ala.
Mobil Oil Corp., Kankakee, Ill.
Monsanto Co., Addyston, O.
Alvin, Tex.
Everett, Mass.
Eugene, Ore.
Santa Clara, Calif.
Seattle, Wash.
National Casein Co., Chicago, Ill.
Tyler, Tex.
Riverton, N.J.
National Starch & Chem. Corp., Salisbury, N.C.
A. P. Nonweiler Co., Oshkosh, Wisc.
Onyx Oils & Resins, Inc., Newark, N.J.
Brooker, Fla.
Owens-Corning Fiberglas Corp., Newark, O.
PPG Industries, Inc., Circleville, O.
Pacific Holding Corp., Chicago, Ill.
Pioneer Plastics Corp., Auburn, Me.

Plastics Engineering Co., Sheboygan, Wisc.
Plastics Mfg. Co., Dallas, Tex.
Quaker Chem. Corp., Conshohocken, Pa.
Reichhold Chems., Inc., Azusa, Calif.
S. San Francisco, Calif.
Tacoma, Wash.
White City, Ore.
Andover, Mass.
Elizabeth, N.J.
Niagara Falls, N.Y.
Detroit, Mich.
Charlotte, N.C.
Houston, Tex.
Jacksonville, Fla.
Tuscaloosa, Ala.
Reliance Universal, Inc., Houston, Tex.
Louisville, Ky.
Renroh Resins, New Bern, N.C.
Rugel Textile Corp., Ware Shoals, S.C.
Rock Hill Printing & Finishing Co., Rock Hill, S.C.
Rohm and Haas Co., Philadelphia, Pa.
SCM Corp., Reading, Pa.
Chicago, Ill.
Cleveland, O.
Huron, O.
San Francisco, Calif.
Sandoz-Wander, Inc., Hanover, N.J.
Scher Brothers Inc., Clifton, N.J.
Scott Paper Co., Everett, Wash.
Chester, Pa.
Fort Edward, N.Y.
Marinette, Wisc.
Mobile, Ala.
Seydel-Woolley & Co., Atlanta, Ga.
Skelly Oil Co., Springfield, Ore.
The Sherwin-Williams Co., Chicago, Ill.
Cleveland, O.
Newark, N.J.
Sauhegan Wood Products, Inc., Wilton, N.H.
Sow-Tix Chem. Co., Inc., Mount Holly, N.C.
Southeastern Adhesives Co., Lenoir, N.C.
Standard Oil Co. (N.J.), Odenton, Md.
Sun Chem. Corp., Chester, N.C.
Wood River Junction, R.I.
Sybron Corp., Haledon, N.J.
Synthron, Inc., Morganton, N.C.
Ashton, R.I.
Synvar Corp., Wilmington, Del.
Taylor Corp., La Verne, Calif.
Betzwood, Pa.
Textilana Corp., Hawthorne, N.J.
USM Corp., Spartanbury, S.C.
Centredale, R.I.
Providence, R.I.
United-Erie, Inc., Erie, Pa.
United Merchants & Mfgs., Inc., Langley, S.C.
U.S. Oil Co., E. Providence, R.I.
Lumberton, N.C.
U.S. Plywood-Champion Papers, Inc.,
Redding, Calif.
VWR United Corp., Newark, O.
Portland, Ore.
Richmond, Ore.
Virginia Chems. Inc., Portsmouth, Va.
West Coast Adhesives Co., Portland, Ore.
Westinghouse Electric Corp., W. Mifflin, Pa.
Weyerhaeuser Co., Longview, Wash.
Marshfield, Wisc.
Whittaker Corp., Colton, Calif.
Woonsocket Color & Chem. Co., Woonsocket, R.I.
Wright Chem. Corp., Acme, N.C.

V-H ALKYDS

Alkyd resins are basically polyester resins (resinous reaction products of polybasic acids and polyhydric alcohols) but differ from other polyesters by containing drying oils or fatty monobasic acids and diluted with a nonreactive solvent.

1. ALKYD RESIN PRODUCTION HAS INCREASED VERY LITTLE OVER THE PAST 5 YEARS

Domestic production of alkyds in 1972 increased almost 20% over 1971, keeping pace with increased construction activity. For the period 1967-1972 growth has averaged only 1.7% annually; in fact, there was a steady decrease in production during the period 1968-1971 from 692 million pounds in 1968 to 580 million pounds in 1971. Production for the period 1967-1972 is shown in Exhibit V-1.

Alkyd Consumption Will Probably Not Maintain The 1972 Growth Rate

Alkyds are used almost exclusively in the manufacture of surface coatings (some is used in molding compounds). They are competing with latex and other water-based coatings which are gaining a larger share of the coating market. We expect alkyd production will increase 1-2% per year over the next five years.

2. OVER 100 COMPANIES PRODUCE ALKYD COATING RESINS

These 100 companies operate more than 180 plants throughout the United States, with the heaviest geographical concentration in the Middle Atlantic States, Great Lakes Region, Ohio River Valley and the state of California. These four regions probably contain 75% of the plants. Producers are listed in Exhibit V-H.

Plant Sizes Vary Over A Wide Range

Plant sizes will vary from small "garage type" operations to large integrated operations. An average small size plant might consist of a 500 gal. reactor capable of manufacturing less than 1 million pounds per year to a multi-reactor plant with several large 3000 to 5000 gal. reactors capable of producing 20-30 million pounds per year.

EXHIBIT V-H

Environmental Protection Agency
PRODUCERS : ALKYDS [4,8]

Companies and Resin Plant Locations

Adco Chemical Co., Newark, N.J.
Ball Chemical Co., Glenshaw, Pa.
Barrett Varnish Co., Cicero, Ill.
Celanese Corp., Los Angeles, Calif.
Louisville, Ky.
Newark, N.J.
Chemetron Corp., St. Louis, Mo.
Cook Paint & Varnish Co., Detroit, Mich.
Houston, Tex.
Milpitas, Calif.
N. Kansas City, Mo.
Defiance Industries, Inc., Baltimore, Md.
The Dexter Corp., Waukegan, Ill.
Dock Resins Corp., Linden, N.J.
Ford Motor Co., Mt. Clemens, Mich.
Foy-Johnston, Inc., Cincinnati, Ohio
P. D. George Co., St. Louis, Mo.
Grow Chemical Corp., St. Louis, Mo.
Hugh J. -- Resins Co., Long Beach, Calif.
Kelly-Moore Paint Co., San Carlos, Calif.
McCloskey Varnish Co., Los Angeles, Calif.
Philadelphia, Pa.
Portland, Ore.
Napko Corp., Houston, Tex.
National Lead Co., Philadelphia, Pa.
San Francisco, Calif.
Reliance Universal, Inc., Houston, Tex.
Louisville, Ky.
Schenectady Chemicals, Inc., Schenectady, N.Y.
The Sherwin-Williams Co., Chicago, Ill.
Cleveland, Ohio
Emeryville, Calif.
Garland, Tex.
Los Angeles, Calif.
Newark, N.J.
Detroit, Mich.
Dayton, Ohio
Gibbsboro, N.J.
The Valspar Corp., Rockford, Ill.
Westinghouse Electric Corp., Manor, Pa.
Yenkin-Majestic Paint Corp., Columbus, Ohio

Companies and Resin Plant Locations

Haynie Products, Inc., Baltimore, Md.
Hercules Inc., Burlington, N.J.
Industrial Oil & Varnish Co., Chicago Heights, Ill.
International Minerals & Chemical Corp., Bensenville, Ill.
Kelly-Pickering Chemical Corp., San Carlos, Calif.
Koppers Co., Inc., Bridgeville, Pa.
Richmond, Calif.
Lanson Chemical Corp., East St. Louis, Ill.
Midwest Manufacturing Corp., Burlington, Iowa
Onyx Oils & Resins, Inc., Brooker, Fla.
Newark, N.J.
C. J. Osborn Company, Linden, N.J.
Polychrome Corp., Newark, N.J.
Purex Corp., Ltd., Chicago, Ill.
Reichhold Chemicals Inc., Azusa, Calif.
Detroit (Ferndale), Mich.
Elizabeth, N.J.
Houston, Tex.
Jacksonville, Fla.
S. San Francisco, Calif.
Tuscaloosa, Ala.
Cicero, Ill.
Resinous Chemicals Corp., Linden, N.J.
Resyn Corp., Linden, N.J.
H. H. Robertson Co., Saukville, Wisc.
Roblen Research & Development Corp., Colton, Calif.
Rohm and Haas Co., Philadelphia, Pa.
Shanco Plastics & Chemicals Inc., Tonawanda, N.Y.
Standard Oil Co. of Calif., Anaheim, Calif.
American Alkyd Industries, Carlstadt, N.J.
Ashland Oil & Refining Co., Los Angeles, Calif.
Newark, N.J.
Pensacola, Fla.
Valley Park, Mo.
Cambridge Industries Co., Cambridge, Mass.
Watertown, Mass.
Cargill, Inc., Carpentersville, Ill.
Lynwood, Calif.
Philadelphia, Pa.
Commercial Solvents Corp., Chicago, Ill.
Degen Oil & Chemical Co., Jersey City, N.J.

EXHIBIT V-H (continued)

Environmental Protection Agency
PRODUCERS : ALKYDS[4,8]

Companies and Resin Plant Locations

Farac Oil & Chemical Co., Chicago, Ill.
Farnow, Inc., South Kearny, N.J.
France, Campbell & Darling Inc., Kenilworth, N.J.
Superior Varnish & Drier Co., Pennsauken, N.J.
Synthetic Resins & Chemicals, Inc., Carpentersville, Ill.
Synvar Corp., Wilmington, Del.
Tenneco Inc., San Francisco, Calif.
Union Camp Corp., Valdosta, Ga.
U.S. Coatings Co., Bronx, N.Y.
Armstrong Paint & Varnish Works, Inc., Chicago, Ill.
Beatrice Foods Co., Baltimore, Md.
Bennett's, Salt Lake City, Utah
Brooklyn Paint & Varnish Co., Inc., Brooklyn, N.Y.
M. A. Bruder & Sons, Inc., Philadelphia, Pa.
Carpenter Morton Co., Everett, Mass.
ConChemCo Inc., Baltimore, Md.
Kansas City, Mo.
Houston, Tex.
DeSoto, Inc., Berkeley, Calif.
Chicago Heights, Ill.
Garland, Tex.
Frank W. Dunne Co., Oakland, Calif.
E. I. du Pont de Nemours & Co., Inc., Fort Madison, Iowa
Parlin, N.J.
Philadelphia, Pa.
S. San Francisco, Calif.
Toledo, Ohio
Tucker, Ga.
Enterprise Paint Manufacturing Co., Chicago, Ill.
Fibreboard Corp., Oakland, Calif.
Frisch & Co., Inc., Paterson, N.J.
General Electric Co., Chelsea, Mass.
Schenectady, N.Y.
Georgia-Pacific Corp., Sumter, S.C.
Gilman Paint & Varnish Co., Chattanooga, Tenn.
Grow Chemical Corp., Oakland, Calif.
Tampa, Fla.
Guardsman Chemical Coatings, Inc., Grand Rapids, Mich.
Louisville, Ky.

Companies and Resin Plant Locations

The Hanna Paint Manufacturing Co., Inc., Columbus, Ohio
Pittsburgh, Pa.
Interchemical Corp., Anaheim, Calif.
Cincinnati, Ohio
Detroit, Mich.
Los Angeles, Calif.
Newark, N.J.
Jewel Paint & Varnish Co., Chicago, Ill.
Jones-Blair Paint Co., Inc., Dallas, Tex.
Kohler-McLister Paint Co., Denver, Colo.
Kyanize Paints, Inc., Everett, Mass.
Lilly Industrial Coatings, Inc., Indianapolis, Ind.
Maas & Waldstein Co., Newark, N.J.
McDougall-Butler Co., Inc., Buffalo, N.Y.
Minnesota Paints, Inc., Fort Wayne, Ind.
Minneapolis, Minn.
Mobil Chemical Co., Cleveland, Ohio (2 plants)
Kankakee, Ill.
Louisville, Ky.
Metuchen, N.J.
Pittsburgh, Pa.
Montgomery Ward & Co., Inc., Chicago, Ill.
Staten Island, N.Y.
Benjamin Moore & Co., Cleveland, Ohio
Denver, Colo.
Los Angeles, Calif.
Newark, N.J.
Morwear Paint Co., Oakland, Calif.
A. P. Nonweiler Co., Oshkosh, Wisc.
Norris Paint & Varnish Co., Salem, Ore.
The O'Brien Corp., Baltimore, Md.
South Bend, Ind.
South San Francisco, Calif.
Perry & Derrick Co., Dayton, Ky.
Pervo Paint Co., Los Angeles, Calif.
PPG Industries, Inc., Atlanta, Ga.
Circleville, Ohio
Cleveland, Ohio
Houston, Tex.
Milwaukee, Wisc.
Newark, N.J.
Springdale, Pa.
Torrance, Calif.

EXHIBIT V-H (continued)

Environmental Protection Agency
PRODUCERS : ALKYDS[4,8]

Companies and Resin Plant Locations

Pratt & Lambert, Inc., Buffalo, N.Y.
Red Spot Paint & Varnish Co., Inc., Evansville, Ind.
Rust-Oleum Corp., Evanston, Ill.
Sapolin Paints, Inc., Brooklyn, N.Y.
SCM Corp., Chicago, Ill.
Cleveland, Ohio
Reading, Pa.
San Francisco, Calif.
Standard Oil Co. (New Jersey), Houston, Tex.
Steelcote Manufacturing Co., St. Louis, Mo.
Sullivan Varnish Co., Chicago, Ill.
Sun Chemical Corp., Northlake, Ill.
Textron Inc., North Brunswick, N.J.
Whittaker Corp., Minneapolis, Minn.

Producers of alkyds can produce polyesters in the same equipment. In many instances the economics of production of either or both products may depend upon the ability to produce both products.

V-I ACRYLICS

Acrylic resins are polymers derived from acrylate monomers. A variety of monomers are commercially available. Since they can be polymerized with each other or a wide range of nonacrylic comonomers, they offer a versatile span of products and properties. Among the more popular monomers used are ethyl acrylate, methyl methacrylate, 2-ethylhexyl acrylate, butyl acrylate and acrylic acid.

1. A MODEST VOLUME OF ACRYLICS IS BEING PRODUCED

Acrylic resin production in 1972 increased about 12% over 1971. Prior to 1970, the U.S. Tariff Commission did not report acrylic resin production. However, based on reported demand for acrylates, production for the period of 1967-1972 has increased from about 220 million pounds in 1967 to 590 million pounds in 1972, a compounded annual growth rate of about 22% per year. Production rates are shown in Exhibit V-1. Acrylate producers are shown in Exhibit V-I.

Acrylic Resin Demand Will Be Above Average

It is expected that acrylic resin demand will be above average over the next 5 years and probably average 15% per year through 1977.

2. A MAJOR PORTION OF THE ACRYLATES PRODUCED IS USED CAPTIVELY

There are 5 producers of acrylates (including acrylic acid) with production at 7 locations as shown in Exhibit V-I.

Probably 60-65% Of The Acrylic Resins Produced Is Produced By 4 Companies

The Rohm and Haas Co. probably uses over 50% of its own acrylate production to produce acrylic emulsions for sale. Dow Chemical Co., Celanese Corp. and Union Carbide Corp. uses probably account for an additional 10%. The remainder is used by numerous producers of emulsion polymers used for surface coatings, textiles, paper, polishes, leather and other uses as listed in Appendix 1.

EXHIBIT V-I

Environmental Protection Agency

PRODUCERS: ACRYLICS [15]

	Estimated Capacity (1974) (million pounds)
Celanese Corp.	300
Pampa, Tex. (180)	
Clear Lake, Tex. (220)	
Dow Badische Co.	40
Freeport, Tex.	
The B.F. Goodrich Co.	5
Calvert City, Ky.	
Rohm & Haas Co.	400
Houston, Tex.	
Union Carbide Corp.	
Institute, W.Va.	70*
Taft, La.	200
Total	1,015

*Will probably shut down when Taft reaches capacity.

V-J COUMARONE-INDENE AND PETROLEUM RESINS

Coumarone-indene and petroleum resins are thermoplastic hydrocarbon resins prepared from by-products of large scale coking and petroleum operations. The raw material for coumarone-indene resins is coal tar distillation; for petroleum resins, petroleum distillates resulting from cracking operations.

1. COUMARONE-INDENE AND PETROLEUM RESIN PRODUCTION IS RELATIVELY SMALL

Production in 1972, for these resins, amounted to 325 million pounds. This was a 22% increase over 1971. Production over the years has been highly irregular. For the 1967-1972 period, volume has increased from 284 million pounds to 325 million pounds as shown in Exhibit V-1. Growth is expected to be static over the near future.

Consumption Has Been Erratic

Its main use (asphalt tile) is being challenged by vinyl tile. Increased use in rubber compounding will probably maintain its present volume.

2. FIFTEEN COMPANIES PRODUCE COUMARONE-INDENE AND PETROLEUM RESINS

These 15 companies produce at 20 locations as listed in Exhibit V-J.

(1) We Have Not Been Able To Ascertain Plant Capacities

By-product production is difficult to determine since production depends upon demand of the main product, economics of raw materials, and composition of the raw material. Of course, demand for the resin itself is also a determining factor.

(2) Plants Are Located At Raw Material Sources

These plants are concentrated near coking operations in Pennsylvania and petroleum cracking operations on the Gulf Coast.

EXHIBIT V - J

Environmental Protection Agency

PRODUCERS : COUMARONE-INDENE AND PETROLEUM RESINS[8]

DeSoto Inc.,
Chicago, Ill.
Berkeley, Calif.
Garland, Tex.

Monsanto Co.,
Sauget (E.St.Louis), Ill.

Northwest Industries, Inc.
Marshall, Ill.

PPG Industries, Inc.,
Milwaukee, Wisc.

Neville Chemical Co.,
Anaheim, Calif.
Neville Island, Pa.

Alabama Binder & Chemical Corp.
Tuscaloosa, Ala.

Chemfax, Inc.
Gulfport, Miss.

Masonite Corp.,
Gulfport, Miss.

Reichhold Chemical Inc.
Gulfport, Miss.

Standard Oil Co. of N.J.,
Baton Rouge, La.

Standard Oil Co. of Ind.,
Texas City, Tex.

Valentine Sugars, Inc.,
Lockport, La.

Carpenter Morton Co.,
Everett, Mass.

Kenrich Petrochemical, Inc.
Bayonne, N.J.

Pennsylvania Industrial Chemical Corp.
Chester, Pa.
Clairton, Pa.
West Elizabeth, Pa.

V-K POLYURETHANES

The major uses of polyurethanes include flexible and rigid foams, elastomers, adhesives, coatings and sealants. The manufacture of foams and elastomers is not classified as "chemical/plastics" industry, SIC 2821. Plastic foam manufacture is associated with SIC 3079, "Miscellaneous Plastics Products". Further, the U.S. Tariff Commission does not note foams among "Plastic and Resin Materials" in its reports entitled, U.S. Production And Sales Of Synthetic Organic Chemicals. Hence, this study does not deal with polyurethane foams.

Polyurethane elastomers are similarly not classified in SIC 2821 as plastic materials.

1. URETHANE RESIN PRODUCTION PERTAINING TO ADHESIVES, COATINGS AND SEALANTS IS THE AREA OF INTEREST

The U.S. Tariff Commission data on "Polyurethane and Diisocyanate Resins" deals with the manufacture of adhesives, coatings and sealants under the broad category of "Plastic and Resin Materials".

Exhibit V-K1 indicates the production trends. In our judgment, the data is highly inaccurate.

(1) Growth Is Expected To Be At Least 10% Annually Through 1977

We believe this growth rate may be conservative. Many new uses are being investigated, and any one of these could change total demand drastically.

(2) In The Urethane Resin Categories Studied, Coating Resins Are Most Important

These account for roughly two-thirds or more of urethane resins in the adhesives, coatings, sealants and miscellaneous resins category.

EXHIBIT V-K1

Environmental Protection Agency
PRODUCTION OF POLYURETHANES FOR ADHESIVES, COATINGS AND SEALANTS MANUFACTURE (Resin; Compounded Basis)

	Total Production (Million Pounds)	Data Source
1967	89	1
1968	76; (71)	1; (16)
1969	81; (84)	1; (16)
1970	95	16
1971	79; (106)	1; (4)
1972	116	4
1975	143	16
1977	177	4

2. THERE ARE OVER 100 COMPANIES PRODUCING COATING, SEALANT AND ADHESIVES RESINS

Exhibit V-K2 defines the producers of these resins and plant locations.

According to the Chemical Economics Handbook[14]

- There are 22 companies producing urethane coating resins for sale only. They accounted for over 50% of total urethane coating resin sales on a pound basis in 1969.

- There are 43 companies that produce urethane coating resins for sale as well as for their own captive use. Collectively, they accounted for about 30% of total urethane coating resin sales in 1969 on a pound basis. The largest producers in this list are believed to be Hughson Chemical, Polyvinyl Chemicals, K.J. Quinn, Trancoa (largest), and Wilmington Chemical.

- Many coating companies have the capability of producing the urethane coating resins that go into their coatings. Companies producing urethane resins primarily for captive use include, E. I. Du Pont de Nemours & Co., Inc.; Mobil Oil Corp.; Montgomery Ward Co.; Olin Corp.; PPG Industries, Inc.; SCM Corp.; The Sherwin-Williams Co.

Over 80 Producers Of Urethane Coating Resins Represent An Average Plant Capacity Of Roughly One Million Pounds Of Resin Per Year

In the manufacture of polyurethane coating and miscellaneous resins, actual plant capacities are believed to be generally close to the industry average.

EXHIBIT V - K2

Environmental Protection Agency
PRODUCERS: POLYURETHANES [4,8,14]

1. 22 Companies Produce Urethane Coating Resins For Sale Only And Account For Over 50% Of Total Urethane Coating Resin Sales On A Pound Basis In 1969

Companies and Plant Locations	Companies and Plant Locations
Ashland Oil, Inc., Los Angeles, Calif.	Northeastern Laboratories Co., Inc., Melville, N.Y.
Newark, N.J.	Purex Corp., Ltd., Chicago, Ill.
The Baker Castor Oil Co., Bayonne, N.J.	Reichhold Chemicals, Inc., Azusa, Calif.
The Biggs Co., Santa Monica, Calif.	Detroit, Mich.
Cargill, Inc., Carpentersville, Ill.	Elizabeth, N.J.
Lynwood, Calif.	Houston, Tex.
Philadelphia, Pa.	S. San Francisco, Calif.
Commercial Solvents Corp., Carpentersville, Ill.	Tacoma, Wash.
Chicago, Ill.	H. H. Robertson Co., Ambridge, Pa.
Diamond Shamrock Corp., Harrison, N.J.	Saukville, Wisc.
France, Campbell & Darling, Inc., Kenilworth, N.J.	Textron Inc., Bellevue, Ohio
General Latex and Chemical Corp., Ashland, Ohio	Thiokol Chemical Corp., Trenton, N.J.
Cambridge, Mass.	Union Carbide Corp., Institute, W. Va.
General Mills, Inc., Kankakee, Ill.	Witco Chemical Corp., Chicago, Ill.
The B. F. Goodrich Co., Avon Lake, Ohio	Lynwood, Calif.
Hugh J. -- Resins Co., Long Beach, Calif.	New Castle, Del.
Interplastic Corp., Minneapolis, Minn.	Wyandotte Chemicals Corp., Wyandotte, Mich.
Mobay Chemical Co. /Naftone, Inc., New Martinsville, W. Va.	

Of the companies just listed, the largest producers (on a total pounds basis) are believed to be (in decreasing order of production volume) Spencer Kellogg Division of Textron, Reichhold, Cargill, Ashland, and Mobay. Spencer Kellogg is the largest producer of urethane alkyds; Reichhold is the largest producer of moisture-curing prepolymers; and Mobay is the largest producer of phenol-blocked prepolymers and two-package prepolymer-polyol systems. B. F. Goodrich and Spencer Kellogg are the leading suppliers of urethane thermoplastic lacquer resins. Nopco Chemical Division of Diamond Shamrock and Wyandotte Chemicals are the major producers of urethane latices.

2. 43 Companies Produce Urethane Coating Resins For Sale And Captive Use And Account For About 30% (by weight) Of Total Urethane Coating Resin Sales In 1969

Companies and Plant Locations

Allied Products Corp., Long Island City, N.Y.
John L. Armitage & Co., Newark, N.J.
Elk Grove, Ill.
Richmond, Calif.
Ball Chemical Co., Glenshaw, Pa.
Bay State Chemical Co., Leominster, Mass.
Beatrice Foods Co., Wilmington, Mass.
Celanese Corp., Los Angeles, Calif.
Louisville, Ky.
Newark, N.J.
Chem Seal Corp. of America, Los Angeles, Calif.
Conchemco Inc., Baltimore, Md.
Kansas City, Mo.
Continental Polymers Corp., Santa Ana, Calif.
Cook Paint & Varnish Co., Detroit, Mich.
Houston, Tex.
North Kansas City, Mo.
De Soto, Inc., Berkeley, Calif.
Chicago Heights, Ill.
Garland, Tex.
The Dexter Corp., El Monte, Calif.
Olean, N.Y.
Cleveland, Ohio
Hayward, Calif.
Los Angeles, Calif.
Rocky Hill, Conn.
Waukegan, Ill.
Emerson & Cuming, Inc., Canton, Mass.
The Epoxylite Corp., El Monte, Calif.
Farnow, Inc., South Kearny, N.J.
Furane Plastics, Inc., Los Angeles, Calif.

Companies and Plant Locations

The P. D. George Co., St. Louis, Mo.
The Goodyear Tire & Rubber Co., Akron, Ohio
Grow Chemical Corp., St. Louis, Mo.
Hoover Ball and Bearing Co., Ann Arbor, Mich.
Insilco Corp., Chicago, Ill.
Isochem Resins Co., Lincoln, R.I.
Jewel Paint & Varnish Co., Chicago, Ill.
Kohler-McLister Paint Co., Denver, Colo.
Lord Corp., Saegertown, Pa.
Lu-Sol Corp., El Monte, Calif.
Mr Plastics and Coatings, Inc., Maryland Heights, Md.
McCloskey Varnish Co., Los Angeles, Calif.
Philadelphia, Pa.
Portland, Ore.
Midwest Mfg. Corp., Burlington, Iowa
Minnesota Mining and Mfg. Co., Decatur, Ala.
National Lead Co., Philadelphia, Pa.
San Francisco, Calif.
Occidental Petroleum Corp., Hicksville, N.Y.
C. J. Osborn Chemicals, Inc., Pennsauken, N.J.
Poly Resins, Inc., Sun Valley, Calif.
Prime Leather Finishes Co., Milwaukee, Wisc.
Products Research & Chemical Corp., Malden, Mass.
Seabrook, N.H.
Schenectady Chemicals, Inc., Schenectady, N.Y.
Sta-Crete, Inc., San Francisco, Calif.
A. E. Staley Mfg. Co., Marlboro, Mass.
Trancoa Chemical Corp., Reading, Mass.
Westinghouse Electric Corp., Manor, Pa.
Wilmington Chemical Corp., Wilmington, Del.
Woburn Chemical Corp., Harrison, N.J.

The largest producers of urethane coating resins in the preceding list are believed to be Hughson Chemical, Polyvinyl Chemicals, K. J. Quinn, Trancoa (largest), and Wilmington Chemical.

3. Companies Producing Urethane Coating Resins Primarily For Captive Use

Many coating companies have the capacity to produce the urethane coating resins that go into their coatings. The extent of their coating-resin production depends both on the volume of their urethane coatings sales and on the price situation in the urethane coating resin market. Currently, the following 18 companies are known to be producing some or all of their urethane coating resin requirements.

Companies and Plant Locations	
American Herberts Corp.,	Woodside, N.Y.
American Pipe & Construction Co.,	Brea, Calif.
Armstrong Chemcon, Inc.,	Chicago, Ill.
Beatrice Foods Co.,	Peabody, Mass.
Chemical Coatings & Engineering Co.,	Media, Pa.
Defiance Industries, Inc.,	Baltimore, Md.
E. I. Du Pont De Nemours & Co., Inc.,	Chicago, Ill.
	Fort Madison, Iowa
	Parlin, N.J.
	Philadelphia, Pa.
	S. San Francisco, Calif.
	Toledo, Ohio
	Tucker, Ga.
Marcor, Inc.,	Chicago, Ill.
The Master Mechanics Co.,	Cleveland, Ohio
Minnesota Paints, Inc.,	Fort Wayne, Ind.
	Minneapolis, Minn.
Mobil Oil Corp.,	Cleveland, Ohio
Norris Paint & Varnish Co., Inc.,	Salem, Ore.

Companies and Plant Locations	
Olin Corp.,	Rochester, N.Y.
PPG Industries, Inc.,	Circleville, Ohio
	Houston, Tex.
	Milwaukee, Wisc.
	Springdale, Pa.
	Torrance, Calif.
	Cleveland, Ohio
Preservative Paint Co.,	Seattle, Wash.
Raffi and Swanson, Inc.,	Wilmington, Mass.
SCM Corp.,	Chicago, Ill.
	Cleveland, Ohio
	Reading, Pa.
	San Francisco, Calif.
The Sherwin-Williams Co.,	Chicago, Ill.
	Cleveland, O.
	Emeryville, Calif.
	Garland, Tex.
	Los Angeles, Calif.
	Newark, N.J.

V-L CELLULOSICS

The cellulosic plastics of interest are the acetates and mixed esters of cellulose and cellulose nitrate.

1. CELLULOSICS ARE A RELATIVELY LOW VOLUME PLASTIC

Cellulosics are considered low volume plastics as compared to others, and production amounted to only 190 million pounds in 1972. Production has been somewhat irregular for the period 1967-1972 showing an average annual growth of 2.2% per year as shown in Exhibit V-1.

Cellulosics Will Grow At A Modest 2-3% Annually

The almost 10% growth in cellulosic resin uses in 1972 will probably not be maintained. This growth was principally in molding and extrusion uses where the immediate advantage was in the biodegradability aspects of the resin. In the long run, ABS resins will probably continue to replace cellulosics.

2. THERE ARE 6 PRODUCERS OF CELLULOSICS

The U.S. Tariff Commission (1970) reports nine producers. However, we have been able to locate only 6 producers operating at 8 locations as shown in Exhibit V-L.

(1) The Majority Of Operating Locations Are Concentrated On The Atlantic Coast

Most of the plants are located in New Jersey, Maryland, and Massachusetss. The largest plant, probably accounting for more than 50% of total production, is operated by Eastman Chemical Products, Inc. at Kingsport, Tennessee.

(2) Plant Capacities Are Confidential

Because of the large share of production accounted for by a single producer, plant capacities are not available. It is believed that Eastman Kodak may account for over 50% of production.

EXHIBIT V - L

Environmental Protection Agency

PRODUCERS: CELLULOSICS[8]

Celanese Corp.
Belvidere, N.J.
Cumberland, Md.
Newark, N.J.

Marcor Inc.
Linden, N.J.

The Richardson Co.
Kearny, N.J.

Standard Pyroxoloid Corp.
Leominster, Mass.

Tenneco Inc.
Nixon, N.J.

Eastman Kodak Co.
Kingsport, Tenn.

Other companies reported producing cellulosics are:

Dow Chemical Company
Hercules Inc.
Monsanto Company
Rosenberg Bros. & Company
Textron Inc.

V-M EPOXY RESINS

Epoxy resins are thermosetting resins which, in the uncured form, contain one or more reactive epoxide or oxirane groups. These groups serve as cross-linking points in the subsequent curing step, in which the uncured epoxy resin is reacted with a curing agent or hardener, generally an amine or anhydride, although other hardeners containing active or reactive hydrogens are also used.

Epoxy resins are usually based on the reaction of epichlorohydrin and Bisphenol A. About 90% of all unmodified epoxy resins produced are of this type. Other types include glycidyl compounds, epoxidized olefins, linear aliphatic epoxides and others.

In addition to the unmodified resins discussed briefly above, modified epoxy resins are also produced. Modified resins are, in general, produced by reacting unmodified epoxy resins with unsaturated fatty acids, rosin acids, tall oil and similar materials. In many cases these modified epoxies are further modified with melamine or urea resins.

1. THE VOLUME OF EPOXIES PRODUCED IS SMALL

Domestic production of epoxy resins for the 1967-1972 period increased from 135 million pounds in 1967 to 174 million pounds in 1972, a compounded growth rate of 5.2%. Growth in 1972 was only slightly better -- 4.2%. Production for the period 1967-1972 is shown in Exhibit V-1.

Epoxy Resin Consumption Will Continue At About The Same Rate As In 1972

These resins should be considered as specialty resins because of their high price, and special end uses such as encapsulating electronic components, high performance adhesives, filament winding of vessels and pipes and reinforced plastic circuit boards. As long as raw material prices remain at their high levels, epoxy prices will remain high resulting in low volume uses. Growth over the near term should be 5% per year or less.

2. ONLY 7 COMPANIES PRODUCE UNMODIFIED EPOXIES

These 7 producers operate plants at 8 locations. Exhibit V-M lists locations and plant capacities of producers.

EXHIBIT V - M

Environmental Protection Agency

PRODUCERS : EPOXY RESINS [14]

Company and Location	Estimated Capacity, April 1970 (Millions of Pounds Per Year)
Celanese Corporation Louisville, Ky.	35
Ciba Corporation Toms River, N.J.	60
The Dow Chemical Company Freeport, Texas	50
Reichhold Chemicals, Inc. Ballard Vale, Mass.	12
Resyn Corporation Linden, New Jersey	25
Shell Oil Company Houston, Tex.	88
Union Carbide Corporation Marietta, Ohio Bound Brook, N.J.	26
TOTAL	296

(1) About 85% Of The Production Capacity Is Located In Two States

The major share of production capacity is located in Texas and New Jersey. The remaining capacity is located in Kentucky, Massachusetts, and Ohio.

(2) Production Capacity Has Generally Been Appreciably Larger Than Actual Production

Most of the extra capacity is required to permit production changeovers for the manufacture of different types of epoxy resins. We estimate overall utilization to be at 70-75% of installed capacity.

Based on plant utilization then, the largest plant would be producing about 64 million pounds, while the smallest would be producing less than 10 million pounds per year.

3. MODIFIED EPOXIES ARE PRODUCED IN OVER 100 LOCATIONS

The total volume of modified epoxies produced is very small -- probably less than 5% of the volume of unmodified epoxies. The principle use for these products is as adhesives which are packaged for retail consumer use.

V-N POLYAMIDES

Polyamide resins are polymers in which recurring amide groups form an integral part of the main polymer chain. They are of two main types: (1) nylon resins which are used to make the well-known nylon fibers and plastics, and (2) those which are made by the condensation of polycarboxylic acids with polyamines, and which are called non-nylon resins.

1. THE OUTPUT OF POLYAMIDE RESINS FOR NON-FIBER USE IS LOW

Only 115 million pounds of polyamide resins were produced in 1972 (nylon resins used to make fibers are not included). This, however, was an increase of 15% over 1971 and somewhat better than the average annual growth rate of 12.8% for the period 1967-1972. Production for the period 1967-1972 is shown in Exhibit V-1.

Polyamide Consumption Will Increase At A Slower Rate

Nylon resins must compete with other plastics, notably acetal and polycarbonate resins, and their use depends on cost/benefit performance. Nylon resins are also relatively high priced, and therefore it is doubtful that large volume uses will be uncovered.

Non-nylon resins are very seldom used alone, and can be used in combination with less expensive resins such as phenolics, urea-formaldehydes, etc. They therefore find a greater variety of uses, yet must still be considered specialty resins.

It is believed that polyamide resins, as a whole, will probably grow at the rate of 8-10% per year in the foreseeable future.

2. THERE ARE 8 PRIME PRODUCERS OF POLYAMIDE RESINS

The prime producers of polyamide resins are those companies producing Nylon 6 and/or 66 for fiber use. These companies producing for plastic applications have a total capacity of over 136 million pounds per year and produce at 10 locations as listed in Exhibit V-N.

There are considerably more producers of non-nylon polyamide resins. Total production capacity, we believe, is less than 40 million pounds and producers and plant locations are listed in Appendix 1.

EXHIBIT V - N

Environmental Protection Agency

PRODUCERS: POLYAMIDE RESINS[8]

	Estimated Capacity (million pounds)
Nylon 66 Type	
El Paso Natural Gas., Etowah, Tenn.	2
Celanese Corp. Deer Park, Tex.	n.a.
Louisville, Ky.	12
Du Pont, Parkersburg, W. Va.	70
Monsanto Co., Pensacola, Fla.	25+
Nylon 6 Type	
Allied Chemical Corp., Chesterfield, Va.	15
Firestone Tire & Rubber Co., Pottstown, Pa.	2
Foster Grant Co., Leominster, Mass.	n.a.
Manchester, N.H.	5+
Custom Resins, Henderson, Ky.	5
Total	136+

Reported producers of non-nylon polyamide resins[8] are listed in Appendix 1.

Production Capacities Vary Widely

Company nylon polyamide resin capacity varies from 2 million pounds to 70 million pounds per year. These capacities are probably quite flexible.

Company non-nylon polyamide capacity also varies widely. Companies such as General Mills, Emery Industries, Stepan Chemical, Epoxylite and Celanese probably have the bulk of the capacity. Average individual capacities for these five companies is probably in the order of 5 million pounds each. The remaining companies share the rest and probably average less than 0.5 million pounds each.

V-O ROSIN MODIFICATIONS

Rosin modifications are thermoplastic resins and are usually prepared by esterification of rosin acids with glycerol or other alcohols. The process not only esterifies but polymerizes the rosin acids.

1. ROSIN ESTER PRODUCTION HAS BEEN DECLINING

Rosin ester production has been erratic since its high of 152 million pounds in 1962, but is declining. In 1972 production was only 95 million pounds, slightly higher than the 89 million pounds the previous year. For the period 1967-1972 production declined at an average compounded annual rate of 6.5% per year. Exhibit V-1 shows yearly production rates for this period.

Consumption Will Continue To Decline

Rosin esters have few uses, and are used in relatively small amounts in various formulations, particularly varnishes, lacquers and other coatings, to impart special properties. Many of these coatings are being replaced, and rosin esters will find fewer markets. We expect rosin production to decline at the rate of about 1% per year through 1977.

2. THERE IS AN EXTRAORDINARILY LARGE NUMBER OF PRODUCERS FOR THE SMALL VOLUME OF ROSIN ESTERS AND ADDUCTS PRODUCED

There are 36 companies producing 97 million pounds of rosin esters and adducts at 71 locations as shown in Exhibit V-O. Most of the producers are alkyd producers and/or suppliers to the coatings industry.

Plants Are Widely Scattered

Rosin ester producers are usually alkyd or coatings producers. The latter are located near their customers.

EXHIBIT V - O

Environmental Protection Agency PRODUCERS : ROSIN ESTERS AND ADDUCTS[8]

Carpenter Morton Co., Everett, Mass.
Celanese Corp., Newark, N.J.
Conchemco Inc., Baltimore, Md.
The Dexter Corp., Rocky Hill, Conn.
Eastern Color & Chem. Co., Providence, R.I.
Farnow, Inc., South Kearny, N.J.
Lawter Chems. Inc., South Kearny, N.J.
McCloskey Varnish Co., Philadelphia, Pa.
Benjamin Moore & Co., Newark, N.J.
The O'Brien Corp., Baltimore, Md.
Onyx Oils & Resins, Inc., Newark, N.J.
C. J. Osborn Chems. Inc., Linden, N.J.
PPG Indust., Inc., Springdale, Pa.
Reichhold Chems., Inc., Elizabeth, N.J.
Rohm and Haas Co., Philadelphia, Pa.
Schenectady Chems., Inc., Rotterdam Junction, N.Y.
Schenectady, N.Y.
Shanco Plastics & Chems., Inc., Tonawanda, N.Y.
Union Carbide Corp., Bound Brook, N.J.
Ashland Oil, Inc., Pensacola, Fla.
Celanese Corp., Louisville, Ky.
Crosby Chems., Inc.; De Ridder, La.
Picayune, Miss.
De Soto, Inc., Garland, Tex.
Dixie Pine Products Co., Inc., Hattiesburg, Miss.
Gilman Paint & Varnish Co., Chattanooga, Tenn.
Hercules, Inc., Hattiesburg, Miss.
Monsanto Co., Baxley, Ga.
PPG Indust., Inc., Atlanta (East Point), Ga.
Houston, Tex.
Reichhold Chems., Inc., Houston, Tex.
Union Camp Corp., Savannah, Ga.
Valdosta, Ga.

Valentine Sugars, Inc., Lockport, La.
Westvaco Corp., Charleston Heights, S.C.
Conchemco Inc., Detroit, Mich.
Kansas City, Mo.
Cook Paint & Varnish Co., North Kansas City, Mo.
De Soto, Inc., Chicago Heights, Ill.
The Dexter Corp., Cleveland, Ohio
Waukegan, Ill.
Guardsman Chem. Coatings, Inc.,
Grand Rapids, Mich.
Internat'l Minerals & Chem. Corp., Bensenville, Ill.
Midwest Mfg. Corp., Burlington, Iowa
Benjamin Moore & Co., Cleveland, Ohio
St. Louis, Mo.
The O'Brien Corp., South Bend, Ind.
PPG Indust. Inc., Cleveland, Ohio
Milwaukee, Wisc.
Pacific Holding Corp., Chicago, Ill.
Purex Corp., Ltd., Chicago, Ill.
Reichhold Chems., Inc., Cicero, Ill.
Benjamin Moore & Co., Denver, Colo.
Los Angeles, Calif.
Napko Corp., Emeryville, Calif.
The O'Brien Corp., South San Francisco, Calif.
PPG Indust., Inc., Torrance, Calif.
Preservative Paint Co., Seattle, Wash.
Reichhold Chems., Inc., Azusa, Calif.
S. San Francisco, Calif.
De Soto, Inc., Berkeley, Calif.
The Dexter Corp., Hayward, Calif.
McCloskey Varnish Co., Los Angeles, Calif.
Portland, Ore.

SECTION VI

GENERAL PROFILE OF THE CHEMICAL/PLASTICS INDUSTRY REGARDING PROCESS TECHNOLOGY AND AIR POLLUTANT EMMISSIONS

SECTION VI

GENERAL PROFILE OF THE CHEMICAL/PLASTICS INDUSTRY REGARDING PROCESS TECHNOLOGY AND AIR POLLUTANT EMISSIONS

This section presents our findings concerning the processing aspects of each of the major plastics and resins manufactured in the United States.

The information regarding the process technology associated with the manufacture of each plastic was compiled from published information. We believe the state-of-the-art is generally described, but particularly newer installations may feature appreciably different design and operating conditions that are proprietary and are, therefore, not described in the literature.

General process descriptions for the following plastic/resin groups are described.

A - Polyethylene and Copolymers
B - Vinyl Resins
C - Styrene Resins
D - Polypropylene
E - Phenolic and Other Tar Acid Resins
F - Polyesters
G - Amino Resins
H - Alkyds
I - Acrylics
J - Coumarone-Indene and Petroleum Resins
K - Polyurethanes
L - Cellulosics
M - Epoxy Resins
N Polyamides

VI-A POLYETHYLENE AND COPOLYMERS

There are two basic types of polyethylene (PE) resins available - high density (HDPE) and low density (LDPE), the latter accounting for about 69% of total PE capacity.

1. LDPE PRODUCTION IS A HIGH TEMPERATURE, HIGH PRESSURE CONTINUOUS PROCESS

All high-pressure PE plants have similar complexities.

All high-pressure polyethylene plants have roughly similar complexities in terms of gas compression and recycling systems as well as handling of the product. There are, however, two major differences in the types of reaction vessels used which may be either the stirred autoclave or tubular design. A generalized flow sheet is shown in Exhibit VI-A1.[18] The process starts with the compression of purified ethylene to between 1,000 and 3,500 atm. Initiators are introduced into the compressed gas stream or into the reaction vessel, before which the gas may be optionally heated to 100-200°C. Water and solvents may also be introduced at this stage. Following polymerization at conversions of between 6 and 25% and the optional removal of water and solvents, the principal separation of ethylene from polyethylene takes place at between 100 and 500 atm, followed by the final separation at much lower pressures. Unreacted ethylene is recycled to the secondary compressor after cooling to provide correct conditions at the intake of the compressor. At the cooling stage a small quantity of low-molecular-weight material may also be removed although this is not the purpose of return gas cooling.

The polymer is then extruded into strands or ribbons, chilled and pelletized. PE is sold as a natural product or reprocessed with various pigments, stabilizers, slip agents, etc.

2. HDPE PRODUCTION IS A RELATIVELY LOW TEMPERATURE, LOW PRESSURE PROCESS WHICH CAN BE EITHER CONTINUOUS OR BATCH

HDPE is manufactured either by solution or slurry type of polymerization (vapor phase plants are being used in some foreign operations) using either a Phillips or Ziegler type catalyst. Based on various information sources, the producers and plant locations by type of catalyst are listed below.

EXHIBIT VI-A1
Environmental Protection Agency
FLOW SHEET:
LD POLYETHYLENE PRODUCTION [18]
(High Pressure Process)

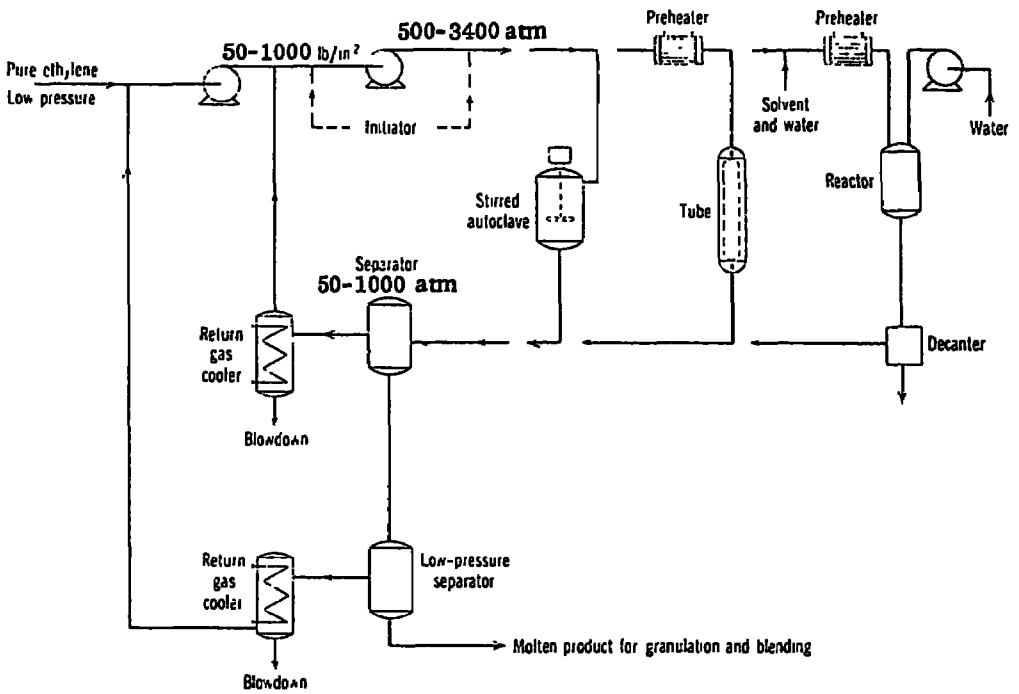

High-pressure polyethylene synthesis.

Manufacturer	Plant Location	Type of Catalyst System
Phillips Petroleum	Pasadena, Texas	Phillips
Celanese Corporation	Deer Park, Texas	Phillips
Union Carbide Corp.	Seadrift, Texas	Phillips
Allied Chemical	Baton Rouge, La.	Phillips
National Petro-Chem	Deer Park, Texas	Phillips
Chemplex Company	Clinton, Iowa	Phillips
Dow Chemical Company	Freeport, Texas	Ziegler
duPont	Orange, Texas Victoria, Texas	Ziegler
Monsanto	Texas City, Texas	Ziegler
Sinclair-Koppers Co.	Port Arthur, Texas	Ziegler

(1) The Polymerization Of PE Using The Phillips Catalyst Can Be By A Solution Or Slurry Process

In a typical solution process as shown in Exhibit VI-A2[19] the catalyst, hydrocarbon solvent boiling in the range of 60 - 90°C. and ethylene or comonomer are fed together into the reactor. Polymerization takes place in the reactor held at 125 - 175°C and pressures of 20-30 atm at a residence time of 1 - 3 hours. The effluent stream from the reactor is passed through flash or fractionation steps to remove dissolved ethylene which is recycled to the reactor. The polymer-solvent solution is diluted and the catalyst removed by filtration or centrifugation operating at 150°C and 20-30 atm pressure. The polymer is precipitated from solution by contacting the polymer solution with water, or by cooling the solution by partial evaporation of the solvent at low pressure; the solvent being recycled to the reaction area following removal of water and polymer impurities. The polymer is dried, extruded and pelletized in conventional equipment; antioxidants, heat stabilizers and other additives may be added during the extrusion step.

The particle form (PF) or slurry process is shown schematically in Exhibit VI-A2 and consists of the following steps: the catalyst, ethylene and hydrocarbon diluent are fed continuously to a liquid-full reactor at temperatures of 100-110°C, pressure and residence time of 20-30 atm and 1 - 4 hours respectively. The effluent from the reactor is removed through a quiescent zone and the low-boiling diluent and dissolved ethylene flash, and are separated and recycled. The remaining hydrocarbon is removed from the polymer in auger-dryers which convey the polymer to storage.

EXHIBIT VI-A2
Environmental Protection Agency
FLOW SHEET:
HD POLYETHYLENE PRODUCTION [19]
(Phillips Solution and Slurry Processes)

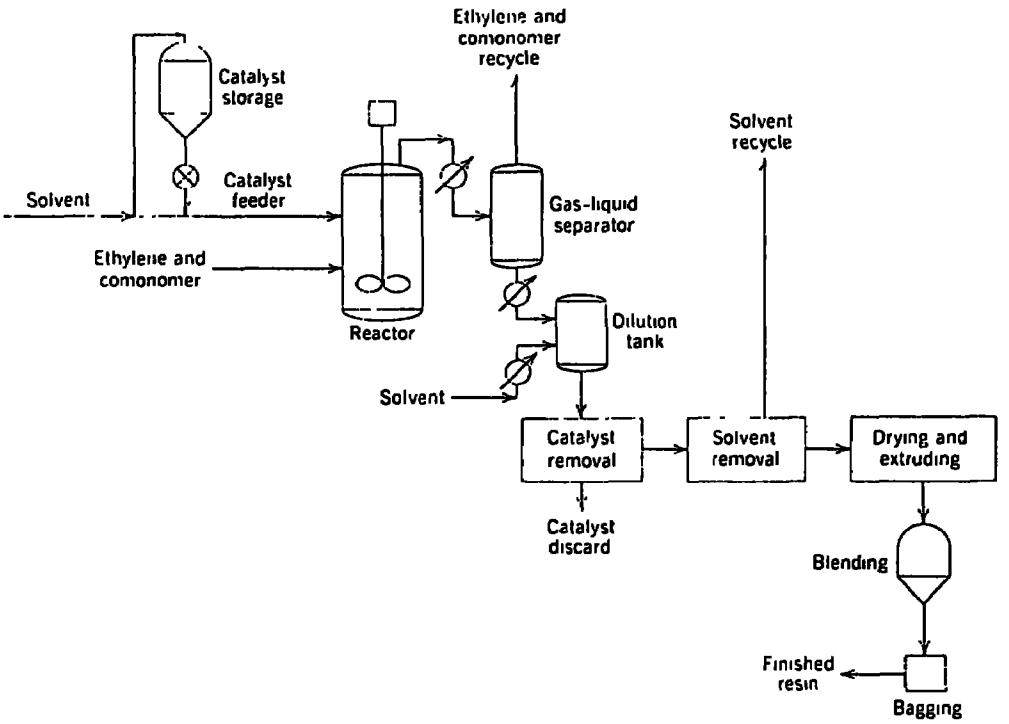

Phillips solution process

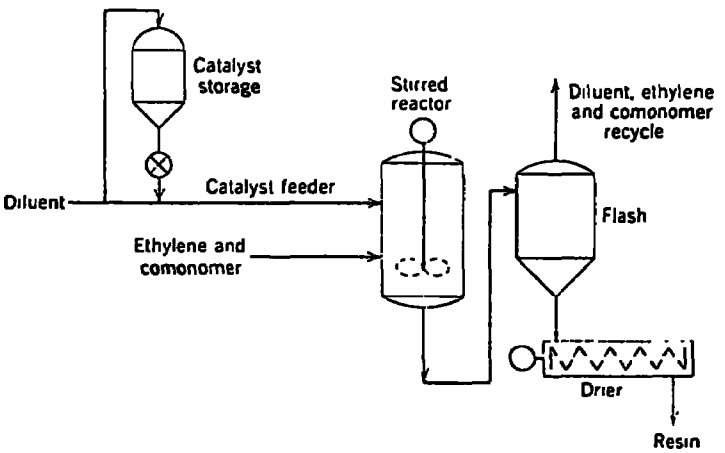

Slurry polymerization process (Phillips).

(2) PE Polymerization Using The Ziegler Catalyst Is A Slurry Process

The flow diagram for this process is very similar to the Phillips process and is shown in Exhibit VI-A3.[20] The greatest variations plant to plant are the washing and purification sections and are largely dependent upon solvent and alcohol supplies. Reaction temperatures vary from 50 - 90°C with pressure of less than 5 atm and residence time from 1/4 - 2 hours. Continuous reaction at 30% solids is considered very good.

3. INITIATORS AND/OR CATALYST ARE USED FOR PE POLYMERIZATION

(1) LDPE Is Produced By High Pressure Free Radical Polymerization

The initiators used are usually "oxygen supplying" products including small amounts of oxygen, oxides of nitrogen, organic peroxides, and others. Numerous initiators are available, and each company has its own product(s) and this information is confidential. Chain modifiers are also used and include solvents, diluents, co-monomers, inhibitors, and others.

(2) HDPE Is A Catalytic Polymerization

The Phillips process is usually based on a chromium oxide and silica-alumina gel, silica gel or other substrate.

Generally, Ziegler catalysts result from the reaction between compounds of transition elements in groups IV-VIII and compounds chosen from the hydrides and alkyls of elements in groups I-III which are capable of producing carbanions or hydrides. Typical catalysts include aluminum isopropyl or isobutyl with combinations of $Ti\ Cl_4$ and $V\ Cl_5$.

4. THERE ARE SEVERAL POTENTIAL EMISSION SOURCES

Emissions are present both inside and outside the plant.

(1) In-Plant Emissions Can Occur As A Result Of Manufacture

- Vapors escape from valves, line and pumps.

EXHIBIT VI-A3
Environmental Protection Agency
FLOW SHEET:
HD POLYETHYLENE PRODUCTION [20]
(Ziegler Slurry Process)

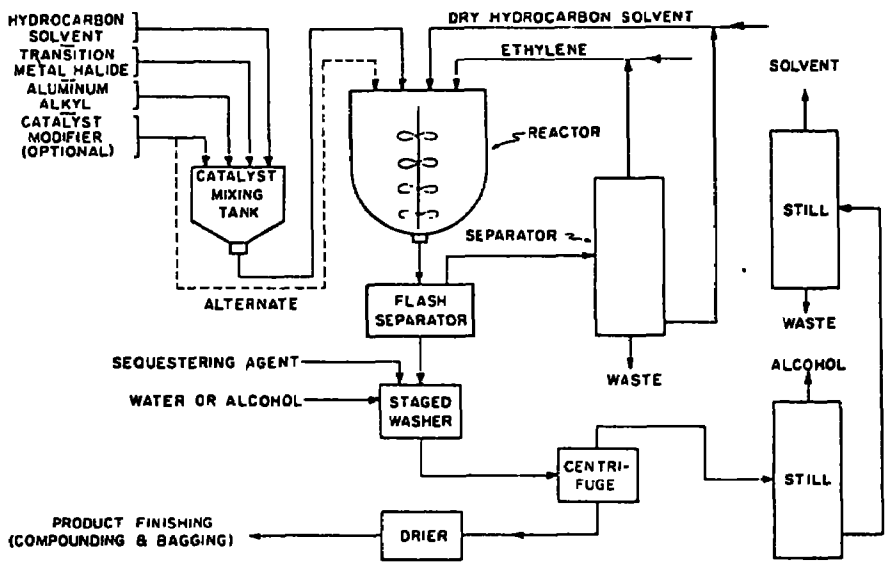

A typical flow diagram—Ziegler polyethylene plant.

- The drying equipment may be a major source.

- Reactor and separator venting contributes substantially.

(2) Emissions Are Noticeable Outside The Plant

- Odorous products produced by decomposition are vented to the air.

- Because of the flammability and explosiveness of ethylene, the air in the plant is ventilated by large volumes of air and vented to the outside.

5. THERE ARE THREE PRINCIPAL EMISSIONS

Polymerization Recipes Are Varied And Secret, But In General, The Following Emissions Are Noticeable

- Solvents in the drier area.

- Catalyst odors.

- Hydrocarbon decomposition odors due to strenuous operating conditions.

6. PLANT SAFETY IS DILIGENTLY PRACTICED

Safety is practiced mainly from an explosive and fire viewpoint. However, the instrumentation for detecting leaks of raw materials, process stream instrumentation, explosion proof equipment, use of non-sparking tools, contribute to keeping odors and emissions to a minimum.

The exhaust systems installed in plants contribute to outside odor problems.

VI-B VINYL RESINS

The most important resin of this group is that produced by polymerizing vinyl chloride alone or with another comonomer such as vinyl acetate, vinylidene chloride, etc. These resins are considered as polyvinyl chloride (PVC) resins if the vinyl chloride content is over 50%.

Two other vinyl resins are important -- polyvinyl acetate (PVAc) and polyvinyl alcohol (PVA) and will be discussed here.

1. ALL VINYL CHLORIDE POLYMERIZATION IS CONDUCTED AT LOW TEMPERATURE AND PRESSURE AS BATCH OPERATIONS

The two most important methods of preparing PVC in the United States are the suspension and bulk polymerization methods although some emulsion polymerization capacity is still in operation.

(1) Probably 80% Or More Of The PVC Produced Is By Suspension Polymerization

A schematic diagram of a typical suspension polymerization process is shown in Exhibit VI-B1.[21] Most reactors in use are water-jacketed and glass-lined ranging from 2,000 - 6,000 gallon capacity. The desired quantity of monomers(s) is measured in the weigh tank and transferred to the reactor containing the proper amount of water. Ratios of water to vinyl chloride range from 1.5:1 to 4:1. Initiators such as lauroyl peroxide or azobisisobutyronitrile, suspending agents such as polyvinyl alcohol, gelatin or methylcellulose and buffers are charged into the reactor. Agitation is started and the mixture brought up to 45-55°C until polymerization is carried to 90% conversion. Cooling water is used to remove the heat of polymerization. The mixture is then transferred to the dump tank, where it is stripped of unreacted monomer by the application of vacuum. This monomer is recovered and recycled. The bulk of the water is separated in a centrifuge and the resin dried in a stream of hot air in a rotary drier. The product is separated from the wet air stream in a cyclone separator, from which it is screened and sent to storage. The wet air stream containing the fines is passed through a filter.

EXHIBIT VI-B1
Environmental Protection Agency
FLOW SHEET:
POLYVINYLCHLORIDE PRODUCTION [21]
(Suspension Polymerization Process)

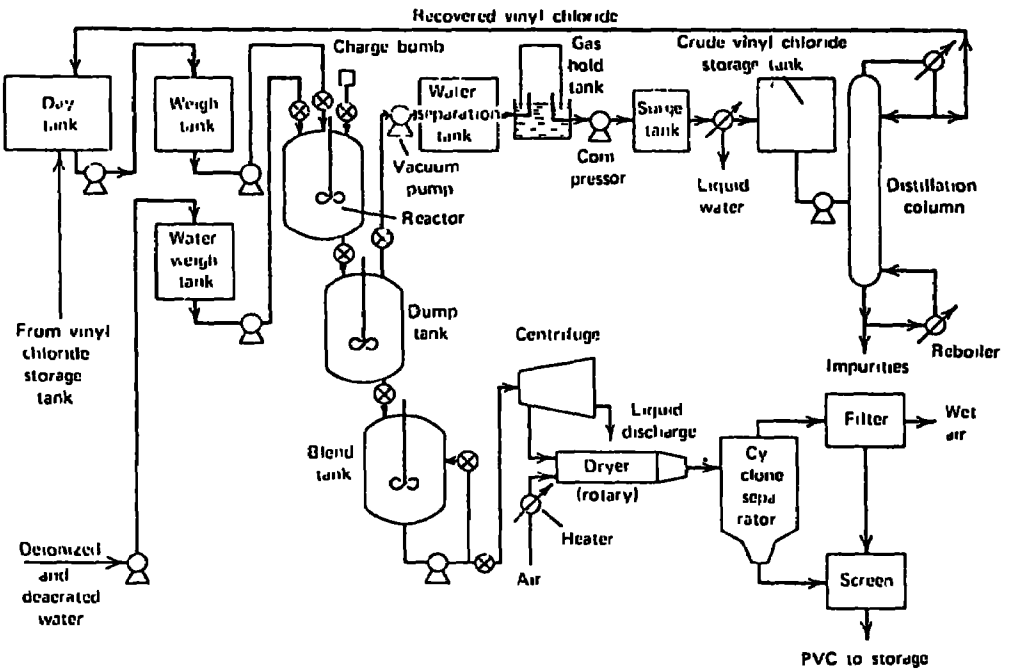

Simplified flow diagram of a batch-type suspension-polymerization plant.

(2) The Next Most Important Polymerization Is Bulk Polymerization

A simplified flow diagram of a two-step bulk polymerization plant is shown in Exhibit VI-B2.[22] Monomer is pumped into a prepolymerizer (a vertical stainless steel-clad vessel equipped with a flat-blade turbine stirrer and baffles), and converted to polymer at a conversion of only 7-10% at temperatures of 40-70°C. The mixture from the prepolymerizer, together with an equal amount of fresh monomer, are transferred to the autoclave, a horizontal reactor equipped with slowly rotating agitator blades. Reaction time is 5-9 hours. Unreacted monomer is removed by vacuum and recovered by vapor compression and condensation in the recycle condenser. The resin is transferred to the resin receiver by means of an air eductor.

(3) Emulsion Polymerization Is Also Used

Vinyl chloride is emulsified in water using surface active agents. Initiator is added and the contents stirred gently at 40-55°C for 12-18 hours. The resultant latex is stripped of monomer. The latex is usually spray dried.

2. POLYVINYL ACETATE (PVAc) IS GENERALLY PRODUCED BY LOW TEMPERATURE BATCH POLYMERIZATION OF VINYL ACETATE

While vinyl acetate can be produced by bulk, solution, suspension and emulsion polymerization techniques, we believe over 90% is produced by emulsion techniques as shown in the schematic in Exhibit VI-B3.[23] Exhibit VI-B4[24] and VI-B5[25] are schematics for a solution and bulk polymerization process. The latter two processes will not be discussed here.

PVAc is prepared and sold as a 55% water emulsion. The average batch size will range from 500 - 2,000 gallons. Polymerization is conducted at vinyl acetate/water reflux temperature of 67 - 80°C. Copolymers can be produced in the same equipment and fashion. Reaction time is about 5 hours. The emulsion is then cooled to room temperature in the reactor and transferred to drums or storage vessels.

EXHIBIT VI-B2
Environmental Protection Agency
FLOW SHEET:
POLYVINYLCHLORIDE PRODUCTION [22]
(Bulk Polymerization Process)

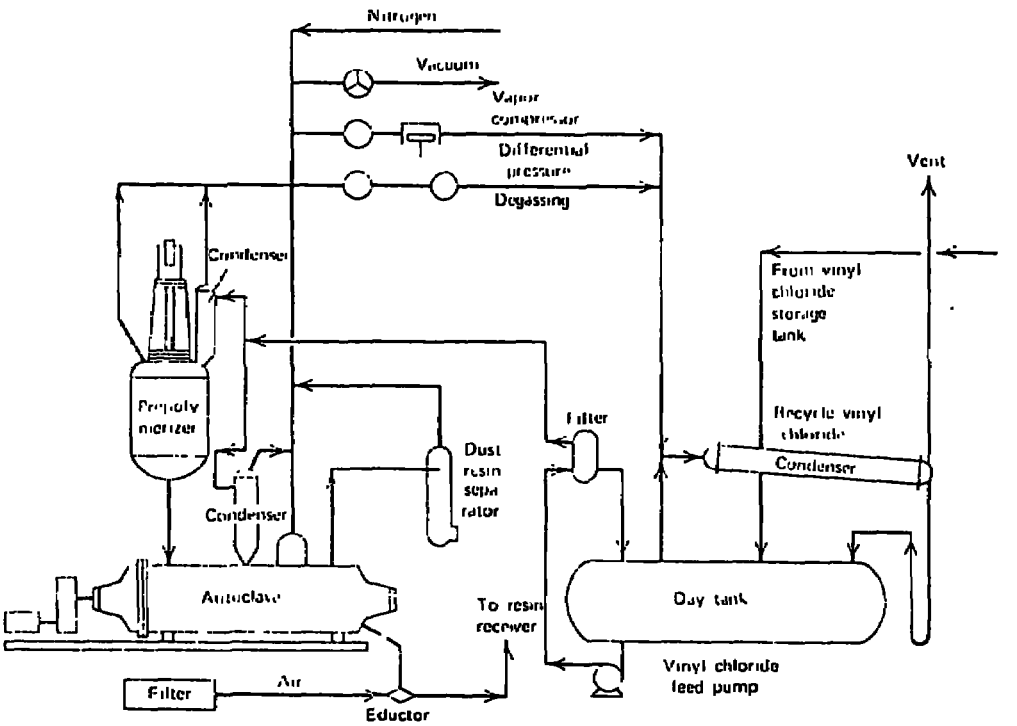

Simplified flow diagram of a two-step bulk-polymerization plant. Courtesy, *Hydrocarbon Processing.*

EXHIBIT VI-B3
Environmental Protection Agency
FLOW SHEET:
POLYVINYL ACETATE PRODUCTION [23]
(Emulsion Polymerization Process)

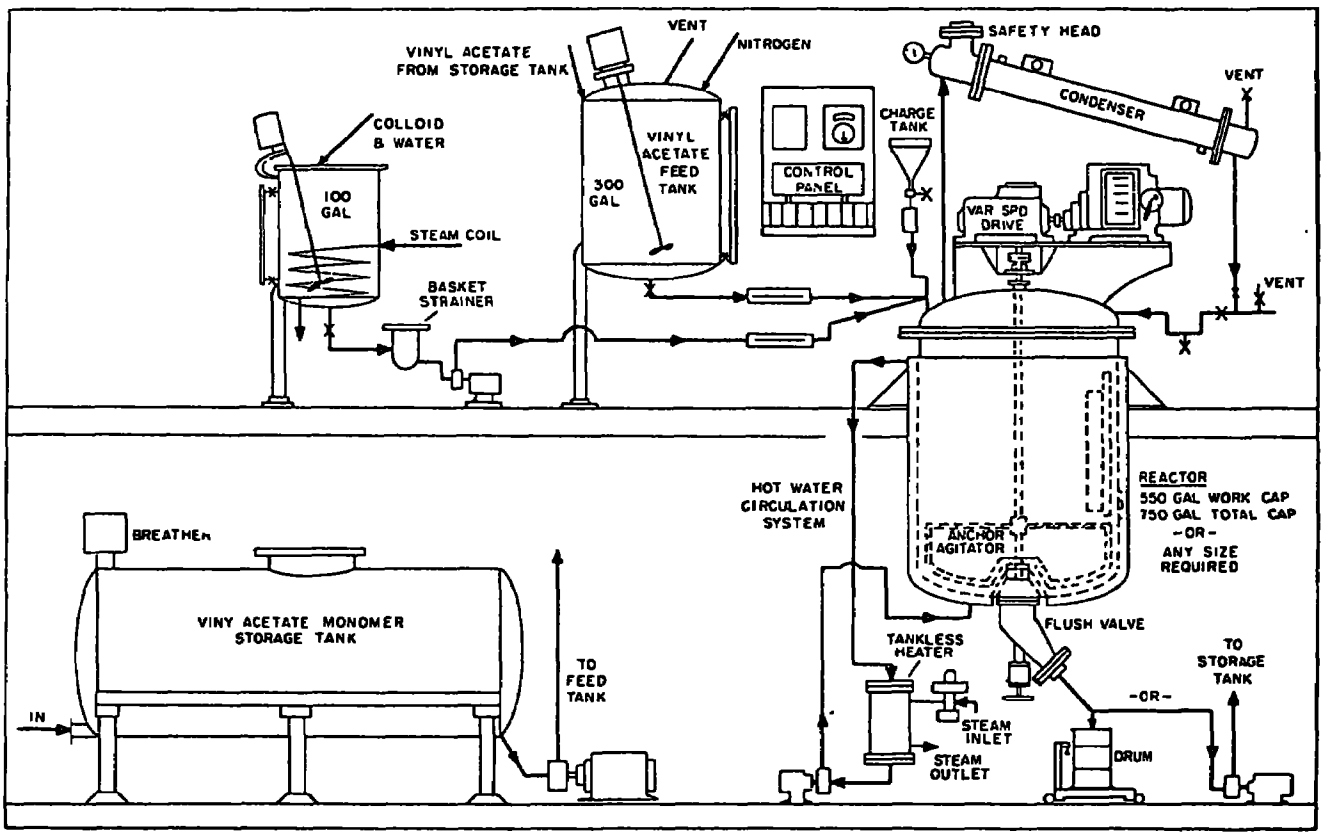

Polyvinyl acetate emulsion unit (*Courtesy Star Tank and Filter Corp*)

EXHIBIT VI-B4
Environmental Protection Agency
FLOW SHEET:
POLYVINYL ACETATE PRODUCTION [24]
(Solution Polymerization Process)

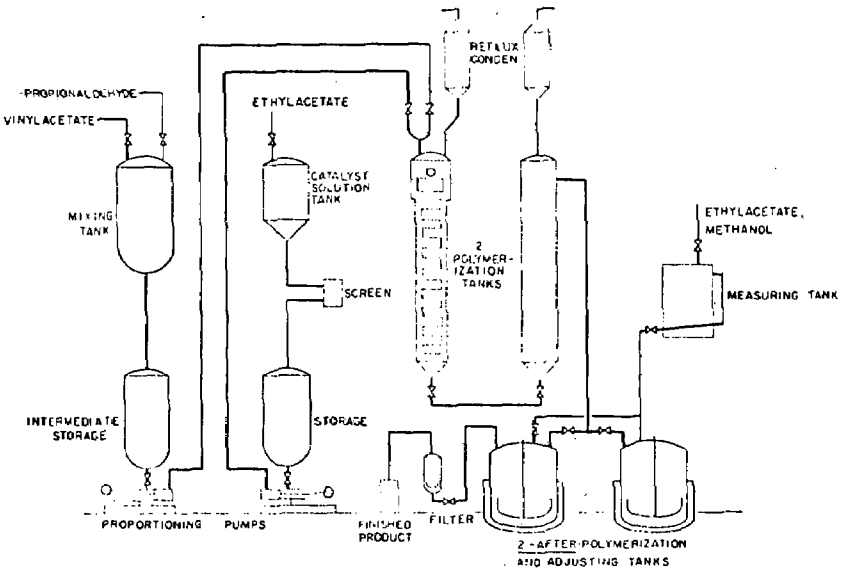

Continuous process for vinyl acetate solution polymers

EXHIBIT VI-B5
Environmental Protection Agency
FLOW SHEET:
POLYVINYL ACETATE PRODUCTION[25]
(Bulk Polymerization Process)

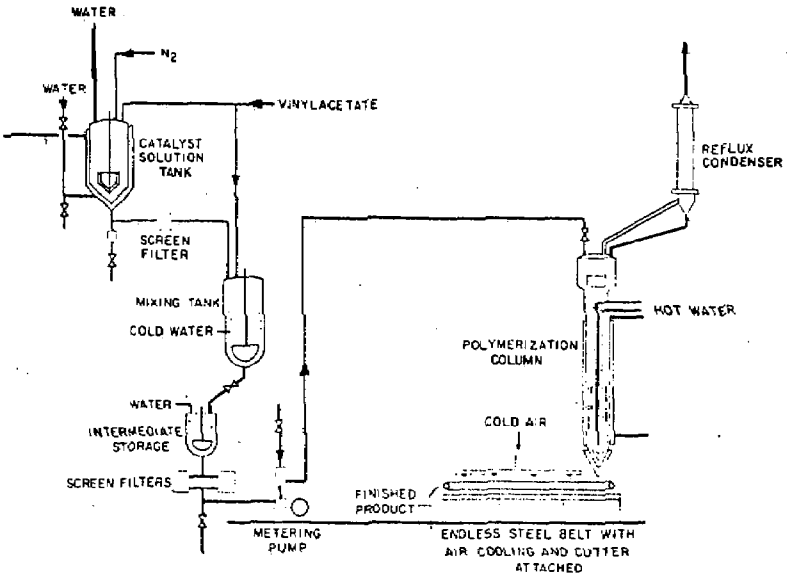

Continuous process for bulk polymerization of vinyl acetate.

3. POLYVINYL ALCOHOL (PVA) IS PRODUCED BY ALCOHOLYSIS OF PVAc AND CAN BE CONTINUOUS OR BATCH PROCESS CONDUCTED AT LOW TEMPERATURE

The PVAc used must be beads and contain less than 1% water. The PVAc is probably made by suspension techniques. A schematic of PVA plant is shown in Exhibit VI-B6.[26]

PVA is prepared in different grades and is a function of degree of alcoholysis. PVAc beads are dissolved in hot methanol (50-60°C). Sodium hydroxide in methanol is added to convert the acetate to alcohol, at which point it begins gelling. After the gel is aged, it is ground and mixed with additional methanol to drive the hydrolysis to the desired degree. Excess alcohol is removed and fed to a dryer with an inlet temperature of 140-160°C and an exit temperature of 70-80°C. The PVA is then pulverized and bagged.

4. EMISSION SOURCES WILL VARY DEPENDING UPON THE RESIN PRODUCED AND DEGREE OF PRODUCT INTEGRATION

When several vinyl resins are produced within a single plant, emission sources would be additive.

(1) There Are Several Sources Of Emissions In A PVC Plant

- Vapors escape from reactors through vents and packing on stirrers.
- Solvent odors are prevalent in the compounding and shipping area.

(2) Emissions From PVAc Plants Originate Mainly In The Manufacturing Section

- Vapors escape from vents in the reactor, feed tank and condenser.
- The drumming section could be a minor source of monomer vapor.

EXHIBIT VI-B6
Environmental Protection Agency
FLOW SHEET:
POLYVINYL ALCOHOL PRODUCTION [26]

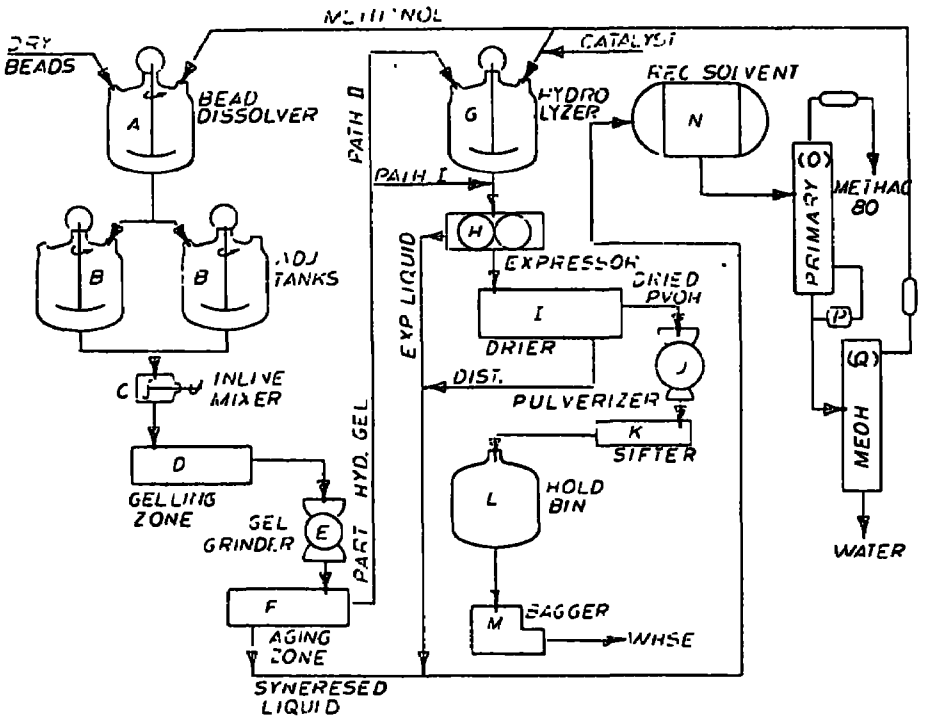

Flow diagram for the alcoholysis of polyvinyl acetate.

(3) Potential Emissions Are Present Both In-Plant And Outside

- Prime sources of emissions would be losses from pumps, valves and solvent recovery systems.

- Odors/emissions may originate in the effluent from the plant.

5. MONOMERS AND COMPOUNDING SOLVENTS ARE THE PRINCIPAL EMISSIONS

(1) Vinyl Chloride And Ketones Are Major Emissions Of PVC Plants

- PVC polymerization employs only vinyl chloride and/or copolymer and water.

- Ketones, principally Methyl Ethyl Ketone (MEK) is the principal volatile solvent used - plasticizers are not volatile.

(2) Vinyl Acetate Is The Major Emission In PVAc Production

(3) Methanol And Methyl Acetate Are The Principal Emissions In PVA Preparation

- Methanol acts as both solvent and alcoholysis agent and is present in excess of required amounts.

- Methyl acetate is formed during the polymerization.

VI-C STYRENE RESINS

Polystyrene, impact polystyrene and styrene-butadiene-acrylonitrile (ABS and styrene-acrylonitrile (SAN) copolymers make up the bulk of this group of resins. Polystyrene is manufactured by polymerizing styrene; impact styrene is a blend of polystyrene with rubber; and ABS and SAN are high tensile strength copolymers. Polystyrene and impact styrene each account for about 30% of the styrene polymers; ABS, SAN and styrene-butadiene copolymers accounting for the remainder with ABS representing about 20% of total styrene resins. Discussion will concentrate on polystyrene, impact polystyrene and ABS.

1. THE BULK CONTINUOUS AND SUSPENSION PROCESSES ARE THE MOST IMPORTANT METHODS FOR PRODUCING POLYSTYRENE[27] (CRYSTAL OR GENERAL-PURPOSE POLYSTYRENE)

Over half of the current United States production of general-purpose polystyrene is made by suspension polymerization, the remainder by some variation of bulk polymerization to high conversion.[28]

(1) In The Suspension Process For The Manufacture Of General-Purpose Polystyrene, Water Is The Prevalent Suspending Medium And Production Is Batch-Wise

Exhibit VI-C1 depicts a flow scheme for manufacture of general-purpose polystyrene by the suspension process. Styrene monomer is pumped directly into hot water containing tricalcium phosphate (TCP), suspending agents and dyes. Typical water to monomer ratios are 1:1 to 3:1. Plasticizers and catalysts or initiators (e.g. benzoyl peroxide and/or tert-butyl hydroperoxide) are added directly to the monomer. A series of temperature rises - from 90°C to 115°C to 130°C - over 8 to 10 hours to complete polymerization. The material is then flushed from the reactor into a mechanical separator which separates the TCP from the polymer beads. The beads are dried, extruded, cooled, chopped and packaged. The driers may be rotary, co-current air driers, counter-current steam-tube driers or rotary vacuum driers.

EXHIBIT VI-C1
Environmental Protection Agency
FLOW SHEET:
CRYSTAL POLYSTYRENE PRODUCTION [29]
(Suspension Polymerization Process)

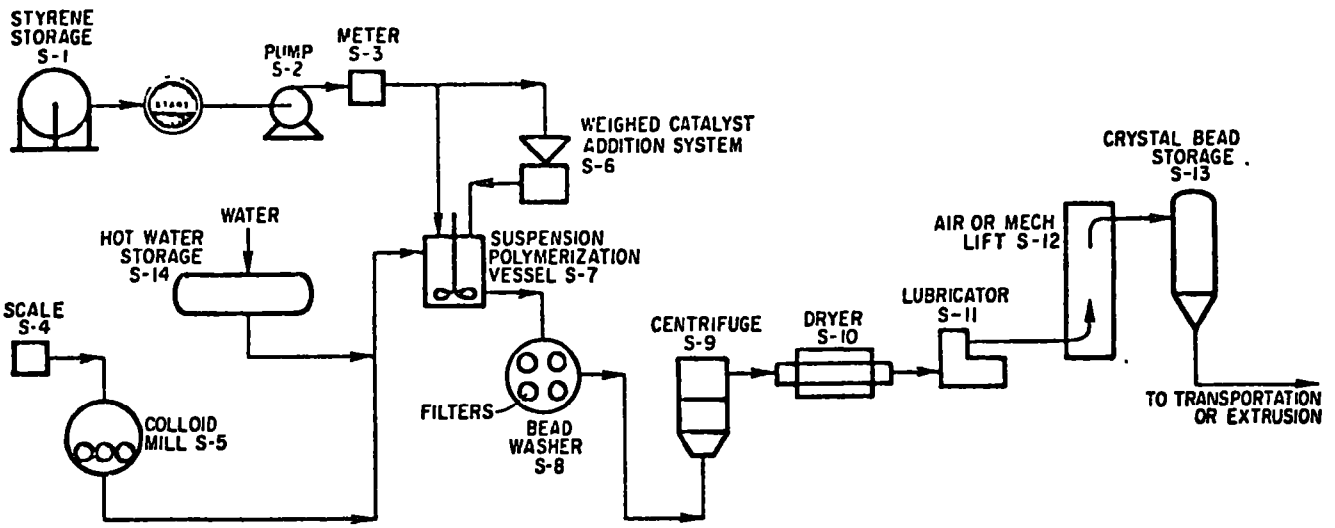

Flow scheme for crystal polystyrene by suspension process.

(2) Bulk Continuous Processes With Or Without Solvent Are Also Used

Exhibits VI-C2 and VI-C3 depict bulk continuous process with and without solvent respectively. In the continuous tower solvent process, 5-25% ethylbenzene is mixed with the monomer prior to entering the first stage polymerizer. Typically, the solution will pass through with each stage being at higher reaction temperatures - the first is at 110-130°C and the last stage being at 150-170°C. The polymerization mass is pumped into a low-pressure, high-temperature devolatilization tank (225-250°C at 5-30 torr pressure) where the unreacted monomer and solvent is flashed off, condensed and recycled. The hot polymer is fed into an extruder and the polymer strands are cooled, cut and bagged.

2. THE BULK CONTINUOUS AND SUSPENSION PROCESSES ARE OF APPROXIMATE EQUAL IMPORTANCE IN THE MANUFACTURE OF IMPACT POLYSTYRENE

(1) In The Bulk Continuous Process For Impact Polystyrene, Rubber Is Dissolved In Styrene, Prepolymerized, Run Into A Continuous Tower, Then Devolatilized And Often Extruded

Exhibit VI-C4 depicts an idealized continuous process for the manufacture of impact polystyrene. Rubber is cut, ground, weighed and transported to a dissolving vessel to which styrene monomer is metered separately; 3-10% by weight rubber is used. The solution is filtered to remove gels and emulsion acids. Polymerization is started in a stirred autoclave either thermally or using catalysts such as benzoyl nitrile or azobisisobutylnitrile. When 35 - 40% polymer content is reached, the polymerization is completed in a continuous tower having temperature gradients of 90°C, 130°C, 150°C and perhaps as high as 200°C. The product is devolatilized in a thin-film evaporator or a herringbone gear devolatilizer with recycling of the volatiles. The product is then extruded or forced through a spinnerette by a gear pump and the final pellet is made and packaged.

(2) In The Suspension Process For Impact Polystyrene, Rubber Is Dissolved in Styrene, Prepolymerized, Suspended And Polymerized, Washed and Dried

Exhibit VI-C5 depicts the flow scheme for impact polystyrene using the suspension process. The initial rubber is dissolved and prepolymerized in a manner similar to the bulk continuous process described above. When 10-20% polymer is reached, the material is suspended in a prepared kettle of water: TCP in about 50: 50 proportions.

EXHIBIT VI-C2
Environmental Protection Agency
FLOW SHEET:
CRYSTAL POLYSTYRENE PRODUCTION [28]
(Continuous Solvent Polymerization Process)

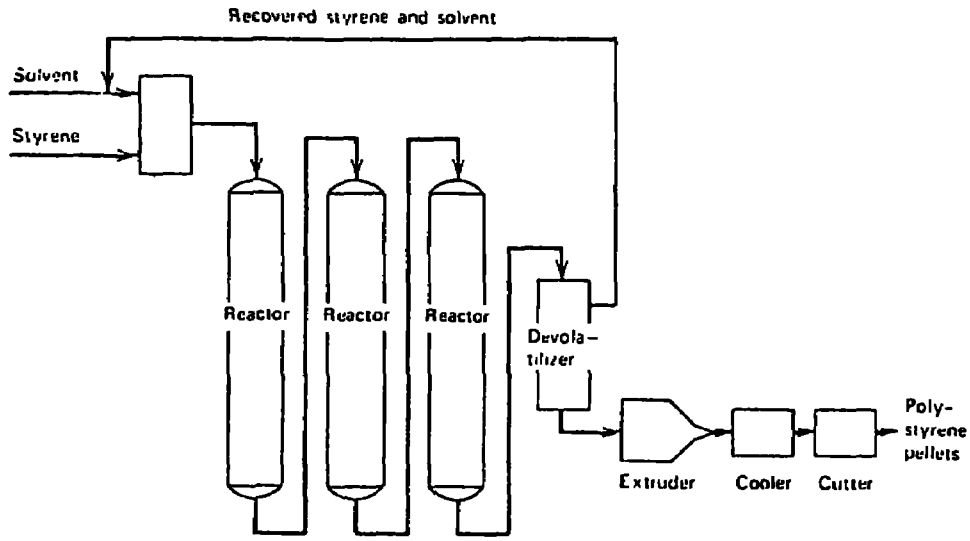

Diagram of the continuous solvent process for styrene polymerization.

EXHIBIT VI-C3
Environmental Protection Agency
FLOW SHEET:
CRYSTAL POLYSTYRENE PRODUCTION [29]
(Continuous Bulk Polymerization Process)

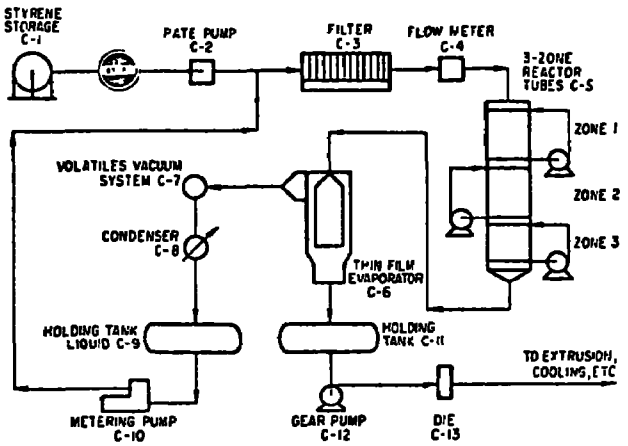

Continuous polystyrene process uses this polymerization system.

EXHIBIT VI-C4
Environmental Protection Agency
FLOW SHEET:
IMPACT POLYSTYRENE PRODUCTION [29]
(Idealized Continuous Process)

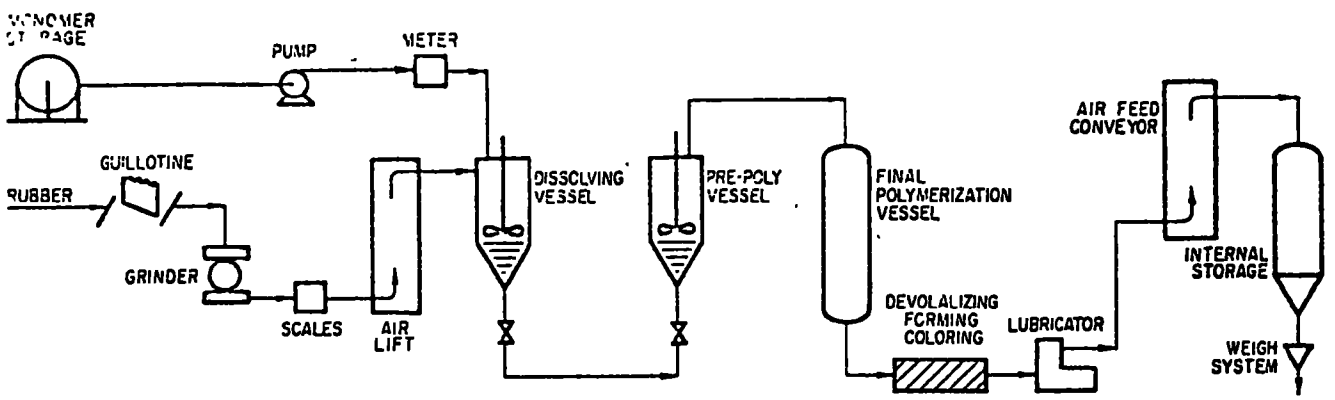

EXHIBIT VI-C5
Environmental Protection Agency
FLOW SHEET:
IMPACT POLYSTYRENE PRODUCTION [29]
(Suspension Polymerization Process)

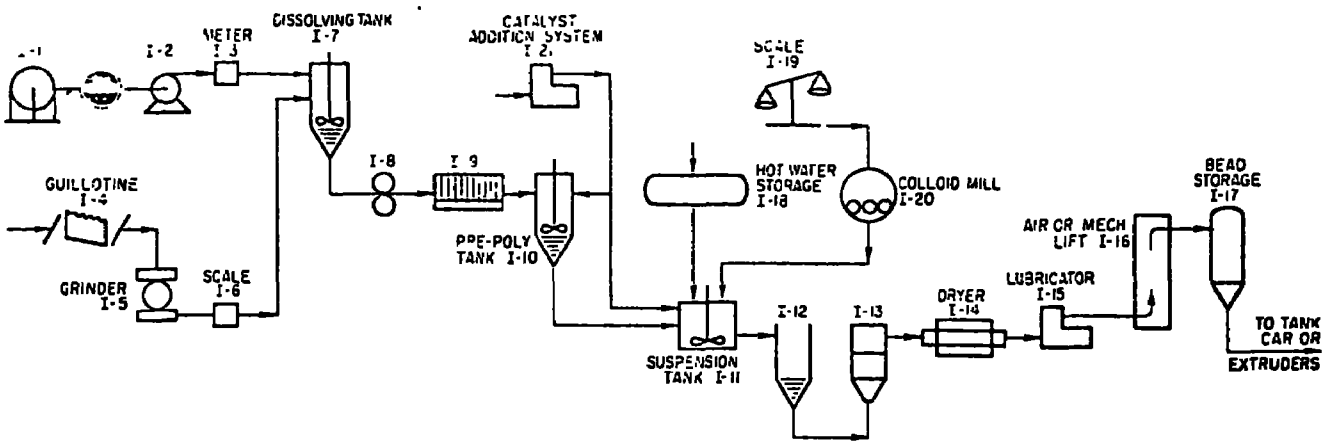

Flow scheme for impact polystyrene using the suspension process.

Catalysts used include benzoyl peroxide or butyl perbenzoate. Polymerization takes between 8-10 hours with a series of temperature rises from 90°C to 115°C to 130°C. The material is then flushed into a mechanical separator which separates the 400 mesh TCP from the approximately 80 mesh impact polystyrene beads. The beads are washed, centrifuged and dried to reduce volatiles to 0.5-0.7% and then extruded with further reduction of volatiles to about 0.2-0.25%. The uncontrolled emission factor in extrusion is about 0.3-0.5% as volatiles.

3. ABS RESINS ARE GENERALLY MANUFACTURED BY EMULSION PROCESSES

ABS resins represent approximately one sixth of the production of styrene based plastics.

Exhibit VI-C6 depicts the flow diagram of ABS polymerization by batch emulsion processes. Reaction temperatures may range from 5 to 80°C. or higher in making the various ABS components. Pressures may vary from 0.1 - 10 atm or more. Reaction time may be from several hours to several days. In a typical emulsion plant, polymerization takes place in a standard jacketed 3,750 gallon reactor. Catalysts are usually peroxides. Carbon tetrachloride is a typical modifier.

ABS is generally sold in a pigmented, compounded and pelletized form.

4. IN THE MANUFACTURE OF STYRENE PLASTICS, STYRENE MONOMER IS POTENTIALLY THE PRINCIPAL EMISSION

Some odor is generally perceptible both inside and outside the plant.

5. THERE ARE MANY POTENTIAL EMISSION SOURCES

(1) In Continuous Processing, Polymerization And Devolatilization Are Potential Emission Sources

- In polymerization, emissions are likely to occur during production interruptions

EXHIBIT VI-C6
Environmental Protection Agency
FLOW SHEET:
ABS PRODUCTION (30)

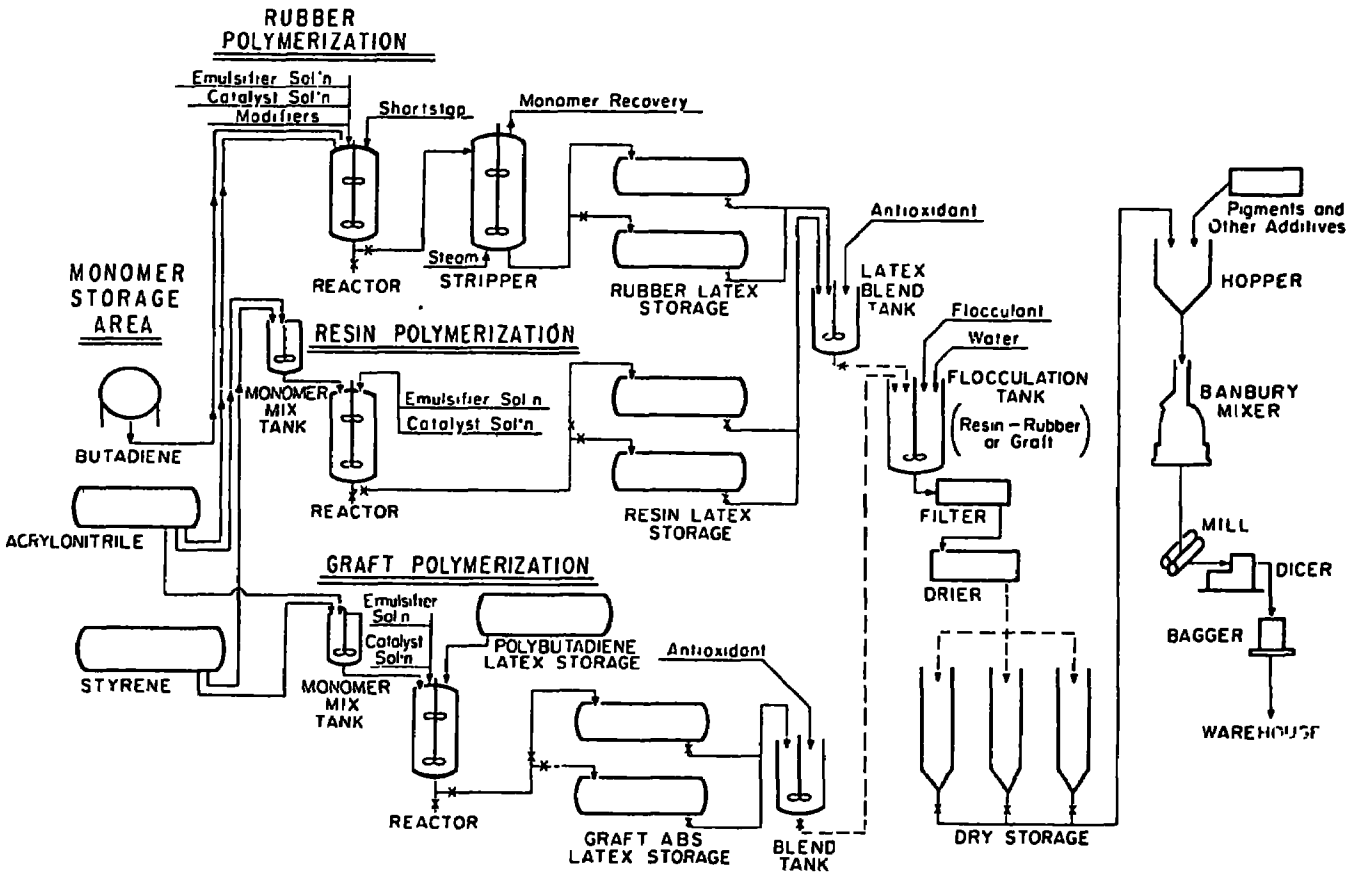

Flow diagram—ABS manufacture.

- Leaks in storage and reaction equipment are maintenance related sources

- Solvent and monomer recovery and extrusion equipment are potential continuous emission sources

(2) In Suspension Processing, Drying Is The Principal Potential Emission Source

- Leaks in storage and reaction equipment are maintenance related sources

- The filling/dumping cycle in the suspension polymerization vessel is a potential intermittent source

- Washing and centrifugation are a potential source of monomer emissions

- Driers can release monomer in relatively low concentrations but in large volumes of air

- Vented extruders are another emission source

6. IN THE MANUFACTURE OF STYRENE PLASTICS, STYRENE AND TO A LESSER EXTENT, ACRYLONITRILE, ARE THE PRINCIPAL EMISSIONS

(1) Some Odor Is Generally Perceptible Both Inside And Outside The Plant

- Styrene monomer odor can be sensed at very low concentrations. The odor is rubbery and sweet.

- Acrylonitrile odors potentially emanate from the manufacture of ABS and SAN. The odor threshold of acrylonitrile is 400-500 times greater than that of styrene monomer. Acrylonitrile monomer smells pungent, onion-like and is 5 times more toxic than styrene.

- Other potential emissions to the atmosphere include
  - ethylbenzene (from continuous solution processing of impact polystyrene)
  - vinyl alcohol (suspending agent)
  - rubber dust (impact polystyrene ingredient)
  - carbon tetrachloride (ABS modifier)

(2) <u>Both For Economic Reasons And Because Of The Odorousness Of Styrene, Modern Plants Manufacturing Styrene Plastics Feature Closed Systems</u>

- Older manufacturing processes, such as filter press processes, have a more significant emission potential per unit of product than large, modern continuous plants.
- Besides utilization of closed systems and pollution abatement equipment, consciencious plant maintenance is the most important emission control means.

VI-D POLYPROPYLENE

1. MANUFACTURE IS CONDUCTED AT RELATIVELY LOW TEMPERATURE AND PRESSURE AND CAN BE EITHER A CONTINUOUS OR BATCH OPERATION

Every process for producing polypropylene (PP) involves three key steps: (1) polymerization, (2) purification, and (3) finishing. A schematic diagram for a typical PP plant is shown in Exhibit VI-D.

(1) Basic Equipment And Operational Steps For PP Polymerization Are Similar

All streams entering the reactor (fresh and recycle diluent, fresh or recycle propylene, catalyst, modifiers) are individually metered and introduced separately into the reactor. (If premixing is practiced, diluent and propylene may be added together, while catalyst components are introduced into lines not containing propylene). Catalyst and propylene concentrations, reaction temperatures and pressure, and residence time are dictated by economics and polymer property requirements, i.e.: reactor temperature and pressure range from 40 - 95°C and below 14 atm respectively; the catalyst is a Ziegler type and a yield of 300-600 pounds of PP per pound of catalyst is considered acceptable. Propylene conversion to PP per pass is 50-70%. The resultant PP slurry contains a maximum of 25% solids.

(2) Purification Consists Of Removing Catalyst, Diluent And Amorphous Polymer

When polymerization is complete, the slurry is passed into the flash tank which is maintained at relatively low pressure. Unreacted propylene along with diluent vapor (e.g. n-heptane, cyclohexane) and other volatiles are flashed off and sent either to the recovery section or condensers and recycled directly to the reactor. The catalyst is deactivated by intimate intermixing of the slurry with a polar compound, i.e., alcohol or water. Inert diluents are removed from the solid PP by filtration or centrifugation. The filter cake containing some volatiles and diluent is conveyed to the drying zone for drying using either a rotary vacuum drier or spray drier.

EXHIBIT VI-D
Environmental Protection Agency
FLOW SHEET:
POLYPROPYLENE PRODUCTION [31]
(Continuous Process)

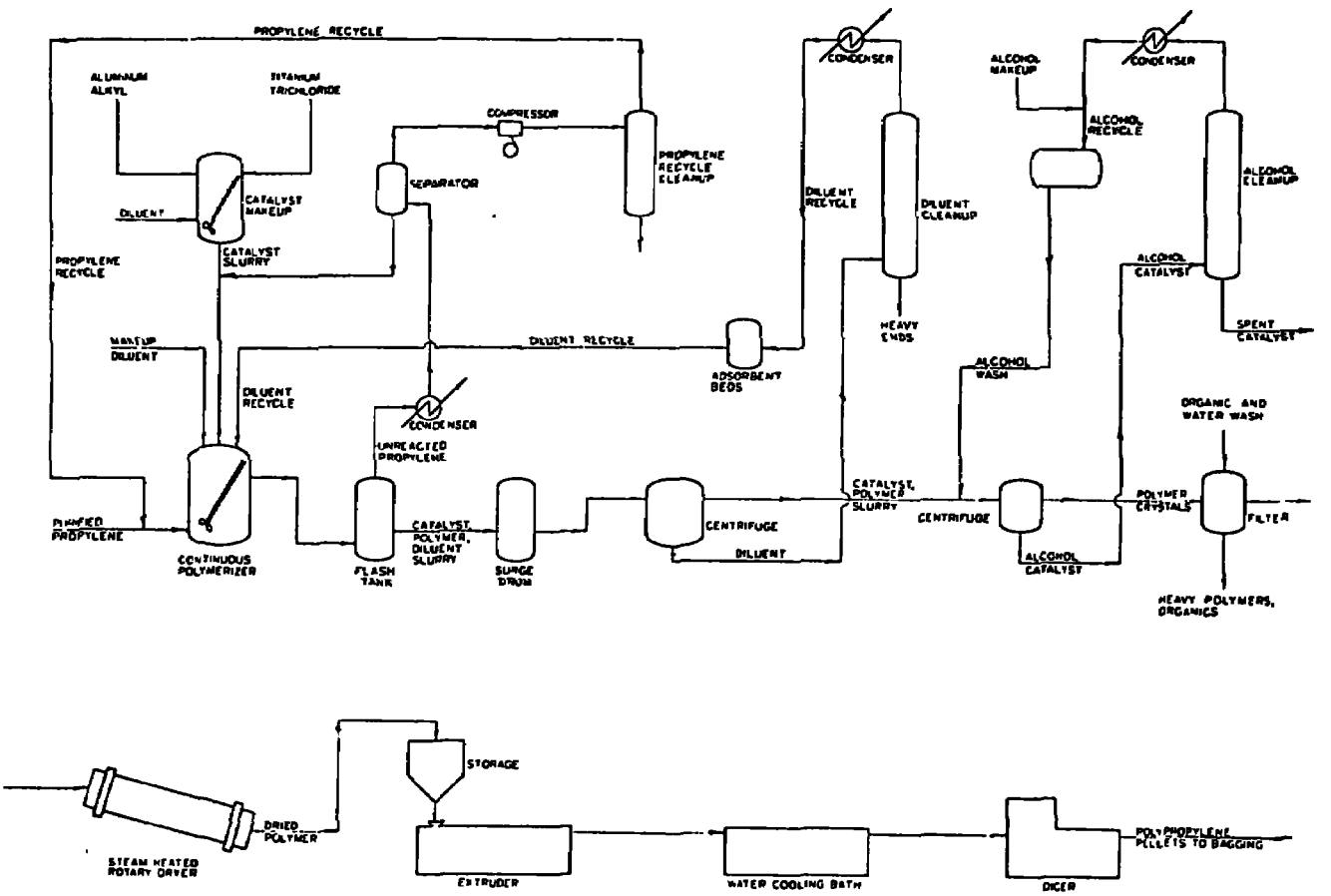

Diagram of a continuous process for polypropylene manufacture

(3) PP Is Usually Compounded And Consolidated Into Pellets

The pellets or beads from the drier section are mixed with various additives, melted, extruded and cut into pellets. The number of additives used is large and includes antioxidants, metal deactivators, U.V. screeners, slip agents, antistats, fillers, plasticizers, others. The pellets are removed by mechanical or pneumatic conveyor to surge bins from which bagging is carried out.

2. THERE ARE SEVERAL POTENTIAL EMISSION SOURCES

Potential emissions are possible both inside and outside the plant.

- Vapors escape from compressors, pumps and vents.
- Solvent vapors are present in the drying area.
- The distinctive odor of catalysts is prevalent outside the plant.

3. THERE ARE THREE PRINCIPAL EMISSIONS

(1) The Metallic Compounds Formed During Polymerization Are Odorous And Toxic

- The odor is prevalent in the catalyst storage and preparative areas.
- Outside plant odors are noticeable.

(2) Solvent Or Diluent Odors Can Be Detected

- Methanol and ethanol are detectable at 2,000 ppm and 350-1,000 ppm respectively.
- Threshold limits should be well below 500 ppm.

(3) Monomers Are Emitted In Greatest Volume

VI-E PHENOLIC AND OTHER TAR ACID RESINS

Phenols react with formaldehyde to form resinous products and although these two products are the most widely used, other phenolic compounds and aldehydes are used.

1. PHENOLICS ARE ORDINARILY MANUFACTURED BY A LOW TO MEDIUM TEMPERATURE BATCH OPERATION

(1) Regardless Of The Final Form Or The Reactants Used In The Process, Equipment And Plant Layouts Are Similar

The schematic diagram for a typical phenolic resin production unit is shown in Exhibit VI-E1 and equipment consists of the following:

- Warehousing facilities and materials handling equipment for resin production.
- Jacketed acid-resistant stainless-steel kettles, heated with either steam or Dowtherm, ranging in size from 500 - 6,000 gallon capacity, equipped with shell and tube condensers and heavy-duty anchor or turbine blade agitator.
- Weigh tanks
- Vacuum pump
- Compounding equipment including ribbon blender, heated rolls and low speed cutters.

(2) Polymerization Of Novolak And "One-Step" Phenolic Resins Are Similar

If a catalyzed mixture of phenol and formaldehyde contains one or more moles of formaldehyde per mole of phenol it is called a "one-step resin". When the catalyst is alkaline and there is less than one mole of formaldehyde per mole of phenol, the initial product consists of a solution of a "one-step resin" in phenol. Upon heating without the loss of phenol it can be converted into a Novolak. A Novolak is also formed if the original mixture is catalyzed with an acid.

EXHIBIT VI-E1
Environmental Protection Agency
FLOW SHEET:
PHENOLIC RESIN PRODUCTION [32]

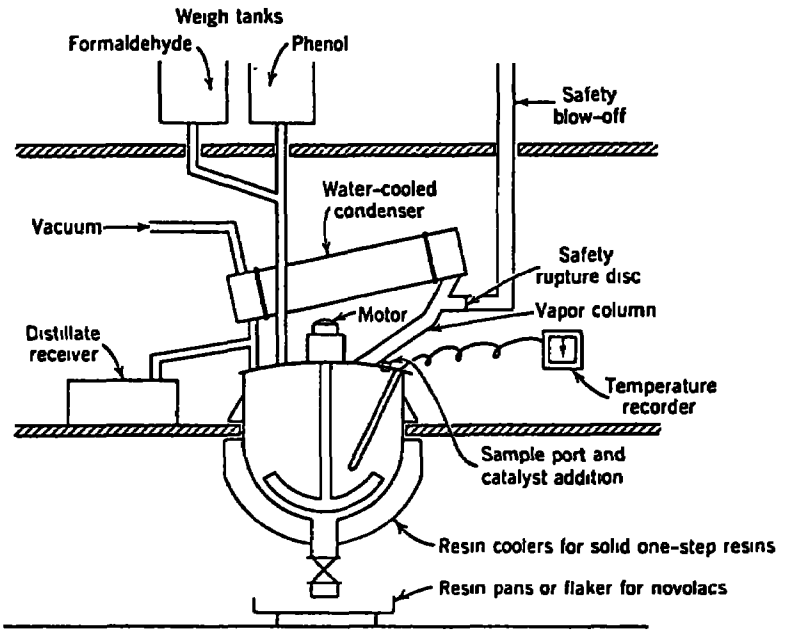

Schematic diagram of typical phenolic resin production unit.

Molten phenol or alternate raw materials such as resorcinol, meta cresol or xylenols at 60-65°C and warm 37-40% formaldehyde at about 40°C are charged to the kettle from the weigh tanks and agitation started. Catalyst is added and steam applied to raise the temperature until the exothermic reaction becomes strong enough to cause the batch to heat without further steam. In Novolak preparation using an acid catalyst (usually sulfuric acid) mild reactions may be allowed to heat up to atmospheric reflux (60-85°C) while strongly exothermic reactions will be held to 85-90°C by vacuum reflux for 3-6 hours. In "one-step resin" preparation, steam provides the initial heat to 60-70°C while the exotherm heat will increase temperature to 80-100°C at low vacuum and reflux for 1-3 hours.

Water is then removed from the reaction mass. In Novolak preparation, the water is removed by slowly bringing the pot temperature up to 120-150°C, then applying vacuum to remove final traces at which time the temperature is 140-150°C and final vacuum up to 100 torr. The "one-step resins" are dehydrated under vacuum and the temperature is not allowed to go over 100°C.

When the desired characteristics are attained, the resins are discharged through a quick-opening bottom cock. If the resin is to be used in solution, solvent is added while the batch is still molten in the kettle and while the condenser is still set for atmospheric reflux. If the finished resin is solid, it is cooled in shallow pans or on specially cleared floor areas, or it may be fed to a flaker. Liquid resins are usually made-to-order for immediate shipment and are protected from aging by refrigeration.

Most solid-resins are further processed and a flow diagram of the processing is shown in Exhibit VI-E2. Resin for molding materials is compounded with fillers such as wood flour. Novolak resin for adhesive or bonding uses is pulverized with hexamethylenetetramine. A small volume of special "one-step" liquid resin is manufactured for casting whereby the resin is transferred directly from the kettle to molds which are oven-cured for several days at 70-90°C.

2. SOURCES OF EMISSIONS OCCUR PRINCIPALLY DURING POLYMERIZATION AND POLYMER PROCESSING

(1) The Prime Source Of Emission Is The Production Unit

During polymerization odors/emissions escape through the condenser, vacuum line, sample ports and vents. Reactions that become too exothermic are vented through safety blow-offs. When solid resins are made, odors are prevalent after discharge from the reactor since the resins are cooled either in pans, plant floor space or flaker.

EXHIBIT VI-E2
Environmental Protection Agency
FLOW SHEET:
PHENOLIC RESIN PRODUCTION (33)

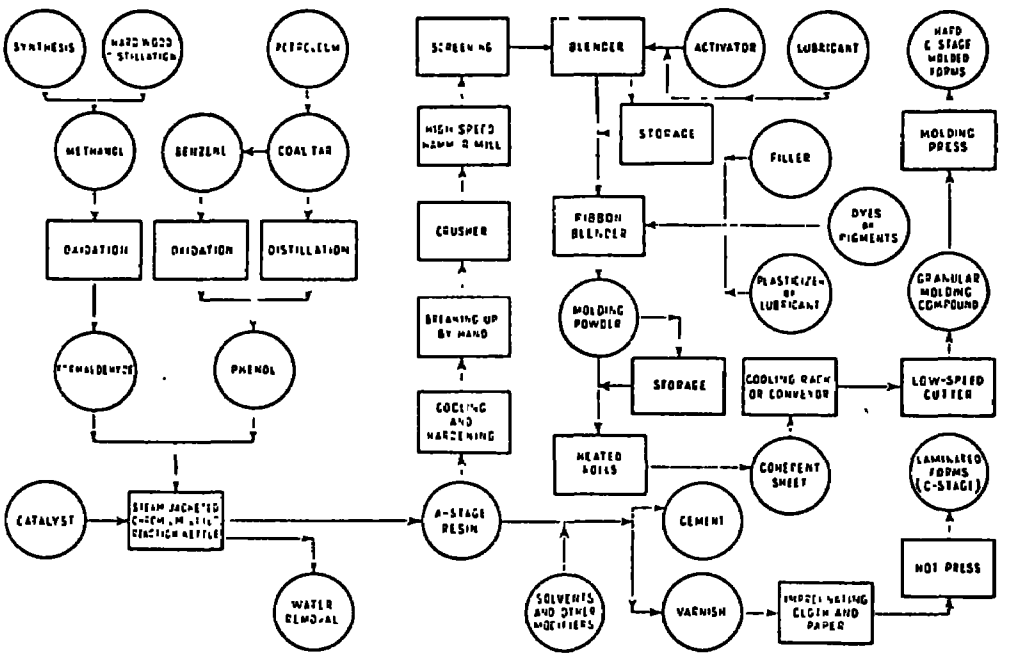

Manufacture of phenol-formaldehyde molding and laminating products.

KEY TO FLOW SHEETS

Boxes indicate operations or apparatus used during a particular stage of the process.

Circles indicate basic materials used

Dotted circles indicate materials which may be used at the discretion of the manufacturer, or to produce special effects

Arrows indicate the direction of flow.

Dotted connecting lines indicate optional paths to be followed, or supplementary processes. Solid lines have been used where processes of equal merit may be used.

(2) Emissions Are Also Noted During Compounding

Odors are noticeable during blending, crushing and mixing of lubricants and activators.

(3) Many Manufacturers Of Phenolics Produce Products Made From These Resins And Odors Are Common In The Molding And Laminating Plant

During phenolic resin use, heat is usually applied to cure the phenolic resins.

3. THERE ARE FOUR PRINCIPAL EMISSIONS

(1) The Reactants Are Main Sources Of Air Pollution

- Phenol and formaldehyde are very noticeable.
- Phenol is considered toxic and may be absorbed through the skin or inhaled.
- Formaldehyde is an eye, skin and respiratory irritant

(2) The Solvents Used In Making Solutions Of These Resins Contribute To Total Emissions

Important solvents include:

- Cellosolve Acetate
- Butanol
- Ethanol
- Methyl Ethyl Ketone (MEK)
- Cyclohexanone

(3) The Formaldehyde Used Is Normally Stabilized With Methanol

About 1% methanol is used to stabilize the formaldehyde and this would be emitted through the condenser during polymerization.

(4) The Activator Used Is A Source Of Odor

Activators normally used include ammonia and/or hexamethylenetetramine which have sharp ammoniacal odor.

4. PHENOLIC RESIN PLANTS REPRESENT AN EMISSION PROBLEM

While the phenolic resin industry has an excellent record of serious-injury rates, it does have a reputation as an industry with a high odor factor. Phenols, for example, are detectable as low as 5 ppm and formaldehyde can be detected well below 1 ppm.

Good ventilation and other safety standards are normally practiced within the plant so that odor/emission effects would be most pronounced outside operating plants.

VI-F POLYESTERS

Polyester resins are unsaturated prepolymers made by esterifying dihydric alcohols with unsaturated dibasic acids or anhydrides. These unsaturated prepolymers are dissolved in an unsaturated monomer with which it cross-links to form the ultimate polymer.

1. MANUFACTURE IS A HIGH TEMPERATURE BATCH OPERATION

(1) Manufacturing Equipment And Plant Layout Are Similar To That Used In Alkyd Manufacture

The equipment layout of a typical polyester plant is shown in Exhibit VI-F and consists of stainless-steel reactors from 500 - 5,000 gallons. (Glass-lined vessels are used only where exceptionally light colored resins are required or when halogenated starting materials are used). The steam condensers which operate at 100-110°C separate the water of reaction from the process. The thinning tank has a capacity double that of the reactor.

(2) The Reaction Is An Esterification Reaction

The dibasic acids or anhydride, usually phthalic anhydride or isophthalic acid and maleic anhydride, fumaric acid, succinic acid are reacted at 190-220°C with polyhydric alcohols such as propylene glycol, ethylene glycol, diethylene glycol, for 8-20 hours. Sparging, during esterification, with an inert gas shortens reaction time by assisting in removing the water formed during condensation.

When the esterification has progressed to the desired stage, the reaction mixture is cooled to 100-150°C and dropped into the thinning tank containing the monomer, e.g. styrene or methyl styrene and inhibitors, e.g. hydroquinone or para-tertiary butyl catechol. The solution is filtered and sent to storage or shipping.

2. THERE ARE SEVERAL POTENTIAL EMISSION SOURCES

(1) In-Plant Emissions Occur As A Result Of Manufacture, Handling And Storage

- Vapors escape through packing on reactor and thinning tank stirring equipment.

EXHIBIT VI-F
Environmental Protection Agency
FLOW SHEET:
POLYESTER RESIN PRODUCTION [34]

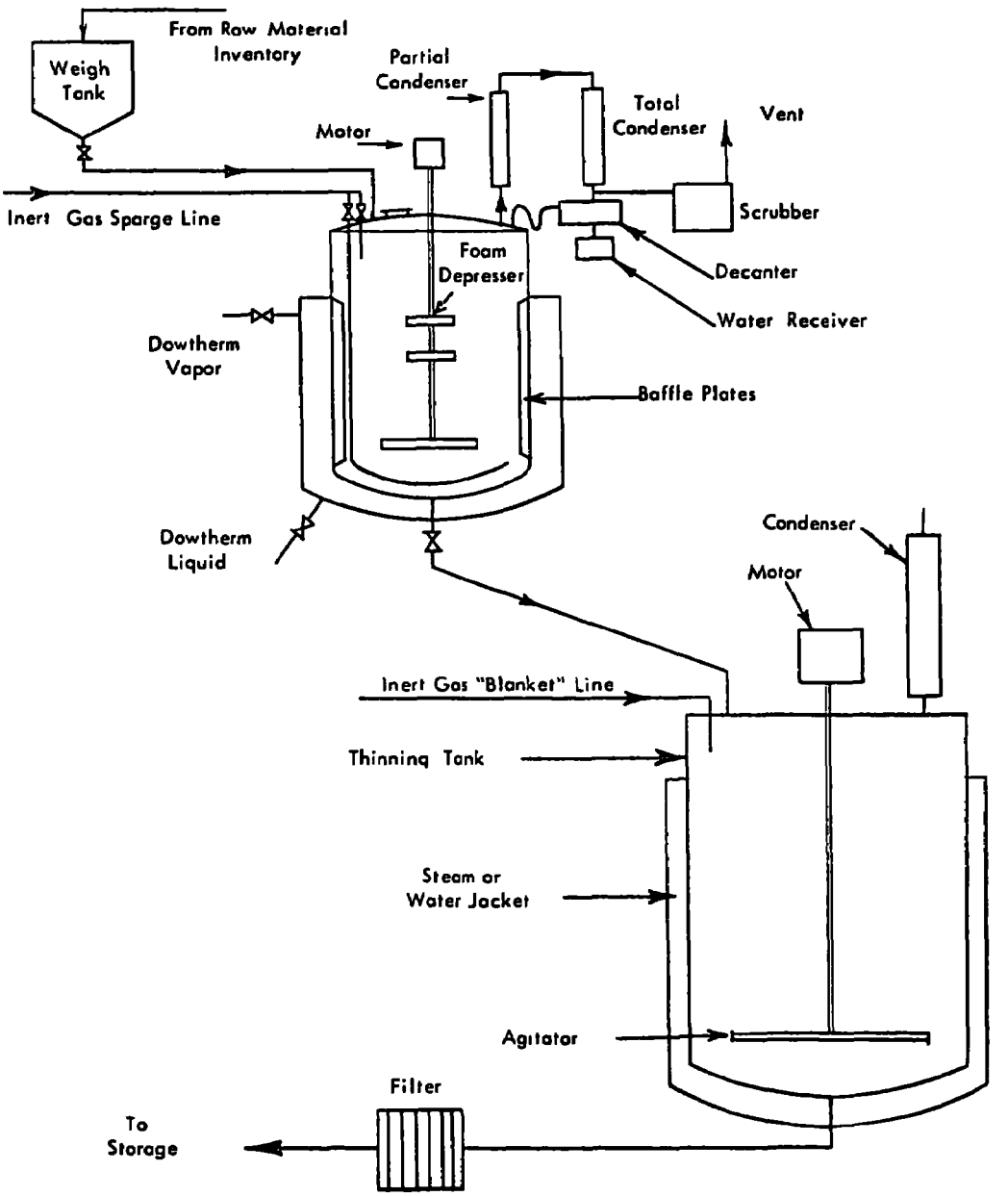

Schematic diagram of typical alkyd processing plant.

- Vapors escape through vents on reactor and thinning tank.

- Monomer odors/emissions are prevalent in raw material storage areas, and in drumming areas.

  - Solvents are usually not used.

3. THERE ARE TWO PRINCIPAL EMISSIONS

Unchanged reactants are the prime offenders.

- Anhydrides sublime or vaporize during the reaction.

- Monomers have relatively high vapor pressures, and are particularly odorous even at room temperature.

4. MOST PLANTS FOLLOW GOOD HEALTH AND SAFETY PRACTICES

Reasonable precautions, such as the use of rubber or leather gloves, protective clothing, eye protection and respiratory devices are employed in handling the various ingredients. Cleanliness and careful handling of polyester ingredients are available from raw material suppliers.

VI-G AMINO (U-F and M-F) RESINS

A large class of thermosetting resins are made by the reaction of an amine with an aldehyde. The only aldehyde in commercial use is formaldehyde (F), and the most important amines are urea (U) and melamine (M). Most important uses include molding, adhesives, laminating, textile finishes and paper manufacture.

Butylated melamine resins are also available and these resins are soluble in paint and enamel solvents and lead to uses in surface coatings, often in combination with alkyds.

1. AMINO RESIN PRODUCTION IS A LOW TEMPERATURE BATCH OPERATION

(1) U-F And M-F Resins May Vary Considerably As To Amine: Formaldehyde Ratio And Are Available As Liquids Or Solids

U-F and M-F resins can be produced in the same equipment consisting of a nickel-clad steel reactor which is jacketed and equipped with fume ducts, agitator and condenser. The batch size can vary from 100 - 6,000 gallons.

The reaction between amine and formaldehyde (Formalin, 37%) is carried part way to completion: U-F resins are reacted at temperatures between 20-70°C for molding resins, and at reflux for laminating resins; M-F resins are usually reacted at reflux because of the low solubility of melamine in water. When the required degree of condensation is reached, the resin syrup is circulated through a steel plate-and-frame filter press until the filtrate is water-white and clear.

While many applications utilize liquid resins, there is a large market for solid resins - filled or unfilled resins. Schematics of a typical molding and spray-dried resin plant are shown in Exhibit VI-G1. The procedure for preparing M-F resins follows. U-F resins are handled similarly.

EXHIBIT VI-G1
Environmental Protection Agency
FLOW SHEET:
SOLID AMINO RESIN PRODUCTION (35)

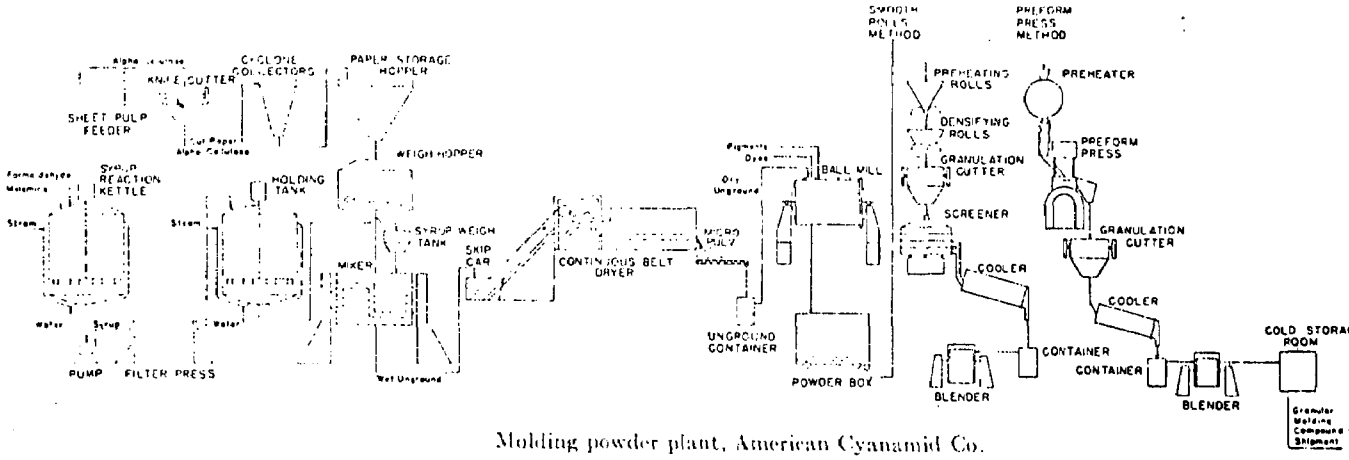

Molding powder plant, American Cyanamid Co.

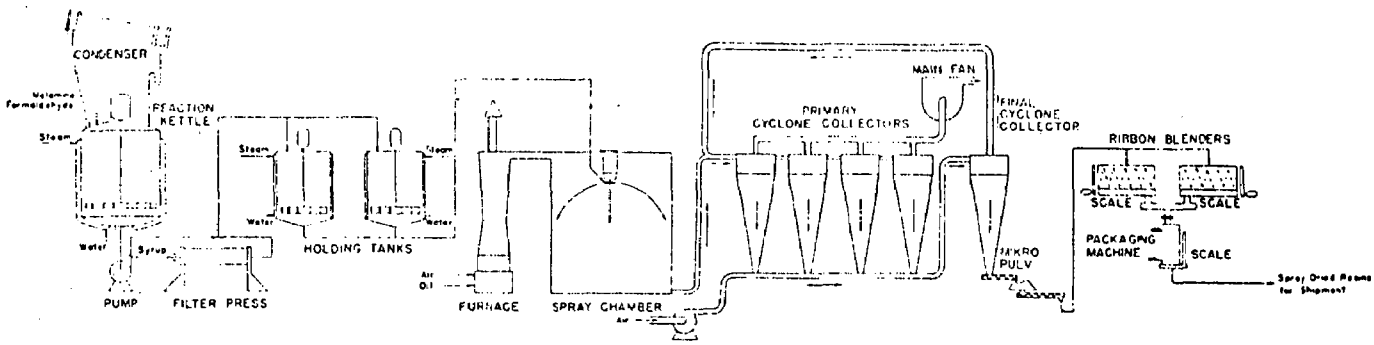

Spray-dried resin plant, American Cyanamid Co.

In the preparation of molding powders, the resin syrup and filler are fed to a mixing tank and held at 50°C then discharged into the dryer hopper then into a continuous tunnel dryer heated and/or cooled by circulating air so that the dried product contains about 6% volatiles. On emerging, the dryer cake is broken up by means of a revolving blade cutter; the pieces falling directly into the hammer mill where the resulting fine powder is caught up in a stream of conveying air and charged to the ball mill along with lubricants, pigments, catalyst and inhibitor. When the ingredients are blended to specification, the powder is densified by feeding it onto the preheating rolls operating at about 120°C where the powder is formed into a sheet which is fed to the cutter. The cut granules pass through the screener and are packed.

Spray-dried resins are prepared by introducing the resin syrup into a spray tower approximately 25 ft. in diameter and 24 ft. high. Hot air is directed downward in the form of a converging cone at the atomizing wheel. A main fan provides the necessary suction to draw approximately 40,000 cfm of air into the drying chamber and through the dry resin collectors. The air stream leaving the drying chamber conveys the dried resin particles to a collection of cyclones arranged in parallel. Each cyclone discharges at the bottom through a venturi-type air lock into a positive pressure, secondary air conveying system. This secondary system discharges the resin beads into conventional ribbon blenders by way of another cyclone collector, and it is then packaged. The effluent air from the secondary system is returned to the main air stream.

(2) Amino Resins Used In Surface Coatings Are Basically Different

These resins are usually water-insoluble, but are soluble or dispersible in hydrocarbons and higher alcohols. Since they are predominantly used in enamels containing alkyd resins, their solubility and compatibility with various solvents such as naphtha, toluene and butanol is a prime requisite. A manufacturing schematic is shown in Exhibit VI-G2.

Condensation of urea or melamine with formaldehyde is carried out in the same manner as described above, but not much beyond the monomeric methylol urea or melamine stage. A large excess of the alcohol, the most common being butanol, is added and the reaction mixture brought to reflux until the water initially present in the formalin and split out by condensation is partly removed and the solution clears.

EXHIBIT VI-G2
Environmental Protection Agency
FLOW SHEET:
BUTYLATED MELAMINE RESIN PRODUCTION [36]

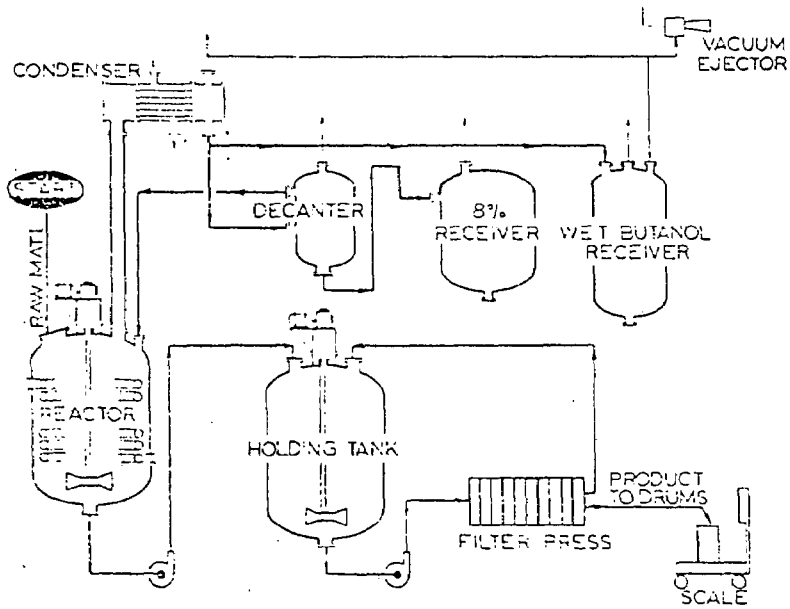

Equipment for manufacturing melamine coating resins.

A separator trap or weir in the reflux line allows the water to be drawn off while the butanol is returned to the reactor. When the desired degree of esterification is reached the butanol-water is diverted to a separate collecting tank for subsequent recovery of the butanol. Solvents such as xylene are now added to the reaction kettle to yield products containing 50-60% resin in a mixture of butanol and xylene.

Melamine-urea resins are available in various solvent combinations of butanol, xylene, butyl "Cellosolve" and mineral spirits.

2. POTENTIAL EMISSION SOURCES OCCUR IN MATERIALS HANDLING, POLYMERIZATION AND COMPOUNDING OPERATIONS

(1) Emissions Occur During Storage And Materials Transport

- Vents in storage tanks
- Leakage in liquid transport piping and valves
- Drum filling

(2) There Are Three Major Sources Of Emissions In Manufacturing

- Leakage through agitator packing
- Spills and leakage through the filter press during operation and clean up
- Condenser venting

(3) The Compounding Operation Probably Presents The Prime Source

- Molding powder plant
  - mixing tank
  - dryer
  - preheating and densifying rolls.
- Spray dried resin
  - cyclone collectors and exhausts
  - spray tower

3. THERE ARE THREE PRINCIPAL EMISSIONS

(1) In Preparation Of The Basic Polymer, Formaldehyde Is The Prime Source Of Emissions

The amino (amido) compounds normally used as raw materials have boiling points far above the reaction temperatures as shown by the following.

Materials For Amino Resins

Raw Material	Melting Point °C	Boiling Point °C
Aniline	-6.2	184.4
Benzenesulfonamide	156	-
Dicyandiamide	207.8	d
Melamine	354	sublimes
Thiourea	180-182	d
p-Toluenesulfonamide	137	-
Urea	132.7 (d)	d

d = decomposes

(2) Alcohols Used In Alkylating U-F And M-F Resins Are Noticeable

The common alcohols used in alkylation are either low boiling or odorous and include

- methanol
- butanol
- octanol

(3) The Solvents Ordinarily Used In The Preparation Of Coating Or Alkylated Resins Are Evident

The solvents used provide compatibility of the amino resins with alkyds and include combinations of

- xylene
- butanol
- butyl "Cellosolve"
- mineral spirits

VI-H ALKYDS

Alkyds are usually made by reacting dibasic acids or anhydrides, usually phthalic anhydride, with a polyhydric alcohol such as glycerol. The alkyd resins can be varied and modified by the use of other anhydrides (maleic), dibasic acids, glycols, polyols or other substances. Regardless of the composition of the finished resins, they are prepared by either a solvent or fusion process described in detail in Section VIII. Quantification of the emissions from these processes is also detailed in Section VIII.

1. MANUFACTURE IS GENERALLY A HIGH TEMPERATURE BATCH OPERATION

Processing temperatures will range between 210-250°C, although in a few instances temperatures slightly above or below this range may be used. Reactor size can range from 500 gal. to 5,000 gal. Agitation is supplied by motor driven propellers, paddles or turbines and gas sparging. Sparging not only agitates the reaction mass but blankets the mass to minimize oxidative degradation of the alkyd. When the reaction has progressed to the desired point, the mass is cooled somewhat and dropped into a thinning tank where it is diluted with organic solvents usually xylene and/or naphtha.

2. THERE ARE SEVERAL POTENTIAL EMISSION SOURCES

Emissions are present both inside and outside the plant.

(1) In-Plant Emissions Occur As A Result Of Manufacture And Handling

- Vapors escape through packing on the stirring equipment of reactors and thinning tanks
- Solvent vapors are prevalent in the drumming area

(2) Vapors Escape Through Stacks And Vents

- Solvents and raw materials are intrained with the sparging gases
- Vapors are released to the atmosphere when scrubbers are vented

3. THERE ARE THREE PRINCIPAL POTENTIAL EMISSIONS

(1) Reactants Escape Because Of High Temperatures Used In Preparation

- Many of the ingredients used have boiling points in the neighborhood of the reaction temperature. This includes the anhydrides, and alcohols

- Phthalic anhydride sublimes just below its melting point and it is not uncommon to see crystals of this product adhering to plant walls and ceilings

- The characteristic odor of maleic anhydride is also detectable

(2) Solvent Odors Are Particularly Strong In Filling Areas

Aromatic solvents are common, the most common being xylene.

4. MOST PLANTS FOLLOW GOOD HEALTH AND SAFETY PRACTICES

Reasonable precautions, such as the use of rubber or leather gloves, protective clothing, eye protection and respiratory devices are employed in handling the various ingredients. Cleanliness and careful handling by the employees are essential. Information needed for the safe handling of alkyd ingredients is available from alkyd raw material suppliers.

VI-I ACRYLICS

Acrylic resins are thermoplastic or thermosetting polymers or copolymers of acrylic acid, methacrylic acid or esters of these acids. These monomer liquid esters polymerize readily in the presence of light, heat, or catalysts.

Because of the high emission potential and odorous/toxic nature of the emissions, this group of resins will be discussed in detail in Section VIII.

1. BULK, SOLUTION, EMULSION OR SUSPENSION METHODS ARE USED IN THE POLYMERIZATION OR COPOLYMERIZATION OF ACRYLIC MONOMERS

(1) Emulsion Polymerization Is Widely Accepted And Is A Low Temperature Batch Operation

Typically, monomers, emulsifiers and water are charged to a reactor. The air is displaced by an inert gas, and the initiators, reducing agents and activators are added and the charge heated to 30-50°C at which time a vigorous reaction occurs and the exotherm will raise the temperature to 90-95°C. Conversion to polymer is almost quantitative. The unconverted monomers are removed by stripping and evaporation and the finished resin emulsion sent to storage.

(2) Suspension Polymerization Produces Dry Beads

Polymerization of the monomer or comonomer mixture is carried out by charging the water, suspending agent, monomer mixture and initiator to a reactor similar to that used in emulsion polymerization. Heat the well-agitated mixture under an atmosphere of nitrogen to just below the reflux temperature and polymerization is complete in about 1 hour. The slurry is filtered or centrifuged to separate the resin beads from the water and the beads washed with water and then dried in a circulating air oven at 80-120°C.

(3) Solution Polymerization Is Especially Suited To Preparation Of Polymers When They Are To Be Used In A Solvent

Polymerization is carried out by slowly adding monomer and initiator to a solvent held at near-reflux temperature. After all the monomer(s) is added, mixing is continued for an additional 4 - 20 hours when polymerization is complete. Additional solvent is then added and the solution sent to storage.

(4) In Bulk Polymerization, The Monomer Acts As The Solvent

Commercial bulk processes for acrylic polymers are used primarily in the production of sheets, rods and tubes. Bulk processes are also used on a much smaller scale in the preparation of dentures and novelty items. The process is used primarily with methyl methacrylate polymerization.

Polymerization is a two-step operation in which the monomer is first partially polymerized to a syrup consistency by heating the monomer at 80-85°C for about 5 minutes. The syrup is then poured into molds, cured at 40-90°C for some time, then post-cured at 140-150°C.

2. THERE ARE MANY POTENTIAL SOURCES OF EMISSIONS AND WILL VARY DEPENDING UPON THE POLYMERIZATION PROCESS

Emissions can occur during storage, materials handling and polymerization operations.

- Vents on both monomer and polymer emulsion and solution storage tanks are a source of air pollution.
- Monomers and solvents used are all liquid, but odorous/hazardous emissions occur as a result of the line leaks and spills.
- Polymerization equipment is vented to the atmosphere.
- Sparging gases form aerosols with the monomers.
- The rapid rate of polymerization and subsequent heat of reaction makes it difficult to prevent vapor escape from the reactors or, for that matter, the entire polymerization system.
- Spills from molds and during curing of the molded products in bulk polymerization is a major source of emissions.

VI-J COUMARONE-INDENE AND PETROLEUM RESINS

Coumarone-indene resins were first prepared as by-products in the refining of coal-tar solvents. More recently, resin formers containing indene were obtained from cracked crude oils. These latter resin formers do not, however, contain coumarone or its homologs.

While coumarone-indene and petroleum (hydrocarbon) resins are reported together by the U.S. Tariff Commission, probably no more than 15% of the total are coumarone-indene resins.

1. PRODUCTION OF BOTH RESIN TYPES IS A LOW TEMPERATURE BATCH OPERATION

The operations in the manufacture of these resins include: blending and purification of raw materials (feed stock); polymerization; recovery of solvent, and finally packaging of the finished resin. A schematic of a typical plant is shown in Exhibit VI-J.

(1) Crudes May Be Blended To Average Out Variations Or They May Be Fractionated

The presence of cyclopentadiene dimer is often undesirable and may be converted to the monomer; however, small amounts may be removed by treatment of the crudes with clay.

The crudes are fractionated into specific boiling ranges to produce resin formers which, on polymerization, will produce specific softening prints.

(2) Polymerization Is Conducted At Low Temperature In A Solvent

While batch polymerization is traditional because temperature control is easier, polymerization can be made continuous. The raw material is diluted to 50%, and more often 30% with an aromatic solvent. Catalyst is added at no higher than 35°C, usually close to 0°C, and the exotherm raises the temperature to 95-105°C. Reaction is completed in 15-30 minutes. Sludges formed during polymerization are removed by treatment with clay and filtration and acids are removed by successive washes with alkali and then water.

EXHIBIT VI-J
Environmental Protection Agency
FLOW SHEET:
COUMARONE-INDENE AND HYDROCARBON
RESIN PRODUCTION

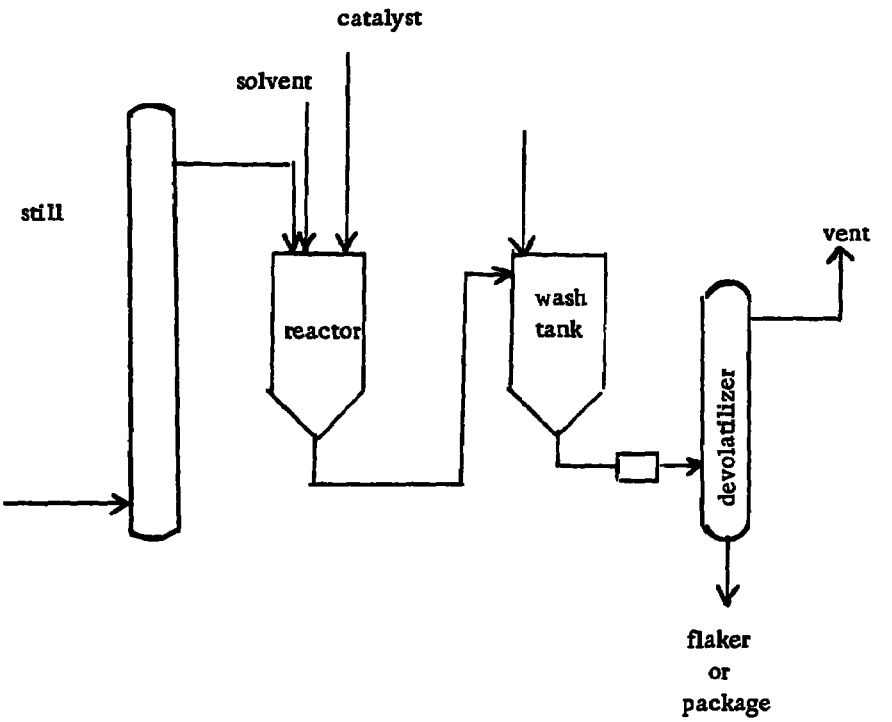

Source: Snell

(3) While The Resin Is Often Finished In Batch Stills, Continuous Finishing Can Be Employed

The resin is heated to about 200°C and flashed under vacuum. Steam is often injected to complete the removal of heavy oils.

(4) The Finished Resin Can Be Shipped Molten Or Drummed

The softer resins (below 100°C softening point) are dropped into lightweight steel drums. The harder resins may also be drummed, but are usually flaked and bagged. Molten handling has been adopted by large users.

Solutions at about 60% solids in an aromatic hydrocarbon thinner are also sold.

2. EMISSIONS ARE WIDESPREAD AND OCCUR AT ALMOST ALL POINTS OF HANDLING AND PROCESSING

(1) The Aromatic Nature Of The Raw Materials And Finished Products Makes Emissions Detectable At Very Low Levels

- Vents in raw material storage tanks, distillation columns, reactor and flash evaporators are potential sources of emissions.
- Odors are prevalent in flaking areas.
- Solvent odors are detectable in finishing and shipping areas.

3. THE VARIATION OF THE COMPOSITION OF FEED STOCK AND FINISHED RESIN(S) MAKES IT DIFFICULT TO IDENTIFY SPECIFIC EMISSIONS

(1) The Coal- And Gas-Tar Fractions Used Have Wide Boiling Ranges

- The resin formers found in gas-derived oils contain all the resin formers found in coal-tar oils with the exception of coumarone and its homologs.

- The composition of the remainder of the resin formers, most of which are odorous at concentrations in the range of 1 - 10 ppm, include:

  - Indene
  - Cyclopentadiene (monomer and dimer)
  - Styrene
  - Methyl homologs of cyclopentadiene
  - Vinyltoluenes
  - Methylindenes
  - Methylstyrenes

(2) <u>Other Odor Contributing Solvents Used During Polymerization And Thinning Include The Following</u>

- Xylene
- Hi-flash naphtha
- Other aromatics

VI-K POLYURETHANES

There are over 100 producers of urethane resins used in the formulation of coatings, adhesives and sealants. Annual production volume is relatively low, from 80 to over 100 million pounds of resin, with coating resins accounting for the bulk of this. Plant capacities are also relatively low, about one million pounds per year, on the average.

The manufacture of some typical urethane resins is discussed in detail in Section VIII.

1. MANUFACTURING PROCESSES ARE LOW TEMPERATURE BATCH OPERATIONS

Urethane coating resins are prepared by reacting di- or polyisocyanates with an intermediate containing at least two active hydrogen atoms per molecule. Formulations are numerous and most are proprietary. Exhibit VI-K1 lists a few formulations that are commercially available.

Resins are usually prepared in closed kettle reactors, blanketed with nitrogen to keep out atmospheric moisture. In general, the polyisocyanate is reacted with the polyhydroxy compounds or polyamines at temperatures ranging from ambient to about 95°C. The isocyanate content of the resulting resin will vary from no free isocyanate to as much as 25% or more.

2. THE MANY URETHANE RESINS PRODUCED CAN BE CATEGORIZED AS NONREACTIVE OR REACTIVE

A simplified classification of the various types of urethane coatings is shown in Exhibit VI-K2.[14] The ASTM designation refers to a classification set up in 1960 by the American Society for Testing Materials, Committee D-1, Paint, Varnish, Lacquer and Related Products, which does not include some of the more recent resin developments.

(1) Nonreactive Urethane Coating Resins Contain No Free Isocyanate Groups

Nonreactive urethane surface coatings include urethane alkyds, lacquers, and latices. These coatings are nonreactive only in the sense that they contain no free isocyanate groups. They are all one-package systems. The urethane alkyd cures by air oxidation and the urethane lacquer and latex cure by solvent evaporation (water in the case of latex).

EXHIBIT VI-K1
Environmental Protection Agency
SOME URETHANE COATING RESINS
AS SUPPLIED BY THE PRODUCERS

- Urethane alkyds:

  60% NVR (nonvolatile resins) in mineral spirits
  50% NVR in mineral spirits

- Moisture-curing prepolymers:

  60% NVR in Cellosolve acetate/xylene blend
  50% NVR in Cellosolve acetate/xylene blend
  42% NVR in Cellosolve acetate/xylene blend
  42% NVR in Cellosolve acetate/xylene blend (non-yellowing)

- Prepolymers for two-package systems:

  60% NVR in Cellosolve acetate/xylene blend
  60% NVR in Cellosolve acetate/xylene blend (non-yellowing)
  Urethane polyols (100% NVR)

- Thermoplastic lacquer (20% NVR)

Note: Cellosolve is a Union Carbide Corporation trade name for ethylene glycol monoethyl ether.

* * *

These are shipped as drums, can or lot or truck-load quantities.

EXHIBIT VI-K2
Environmental Protection Agency
CLASSIFICATION OF URETHANE
SURFACE COATINGS (14)

Description	ASTM Designation	System
Nonreactive		
Urethane alkyd	Type 1	One package; air oxidation
Urethane lacquer	--	One package; solvent evaporation
Urethane latex	--	One package; water evaporation
Reactive		
Moisture-curing prepolymer	Type 2	One package; isocyanate-water reaction
Blocked prepolymer and polyol	Type 3	One package; heat (to unblock), isocyanate-hydroxyl reaction
Catalyzed prepolymer	Type 4	Two packages; catalyzed isocyanate-water or hydroxyl reaction
Prepolymer and polyol	Type 5	Two packages; isocyanate-hydroxyl reaction

(2) Reactive Urethane Coatings Contain Unreacted Or Blocked Isocyanate Groups

Reactive urethane surface coatings are systems that contain unreacted (or blocked) isocyanate groups. These coatings may be one-package or two-package systems. One-package systems include (1) urethane prepolymers that cure by reaction of the isocyanate group with atmospheric moisture and (2) combinations of polyol and urethane prepolymer in which the isocyanate group is blocked (usually with phenol). When the system is heated, the phenol is released and the isocyanate groups in the prepolymer react with the hydroxyl groups in the polyol. Two-package systems include (1) combinations of urethane prepolymer and polyol and (2) combinations of moisture-curing urethane prepolymers and a small quantity of catalyst to accelerate curing.

3. THERE ARE SEVERAL EMISSION SOURCES

Emission Sources Are Present In Raw Material Handling, Prepolymer Manufacture And Finished Product Handling

- Prepolymer manufacturers that are basic in isocyanate manufacture will have less problem in raw materials handling than small, non-basic producers.

  - Basic producers will pump product directly from bulk storage while small producers must hand-handle drums and spillage by the latter is more prevalent.

  - This same situation is true of solvent handling.

- Displacement of moist air in reactors would cause some vapors to vent.

  Shipments of finished product are usually in small lots, and the filling and shipping area would be a source of vapors from

  - Solvents
  - Isocyanates

4. MOST PLANTS FOLLOW REASONABLE SAFETY PRECAUTIONS

Isocyanates can be handled, stored and used safely if their properties are understood and the precautions are observed. The irritating character of isocyanate vapors are the most objectionable feature of these compounds.

Some of the low molecular weight isocyanates have relatively high vapor pressures. TDI, for example, can be detected, by smell, in concentrations as low as 0.1 - 1 ppm. The maximum allowable concentration in the air for extended exposure is said to be 0.1 ppm.

The main precaution taken, in plant, is proper ventilation or the use of respirators or gas masks.

VI-L CELLULOSICS

Cellulosic plastics are those products obtained by the esterification of cellulose. Cellulose itself is a stable polymer of glucose and is the preponderant and essential constituent of all vegetable tissues and fibers, including especially cotton and wood. Pure cellulose is now generally obtained from treatment of wood. In terms of production volume, cellulose acetate and cellulose nitrate are of about equal importance.

1. THE PRINCIPAL PROCESSING STEPS IN THE MANUFACTURE OF CELLULOSE ACETATE ARE PRETREATMENT OF CELLULOSE, ACETYLATION, HYDROLYSIS, PRECIPITATION, STABILIZATION AND ACETIC ACID RECOVERY

(1) Pretreatment Is Essentially Drying Cellulose To A Fixed Moisture Content In The Presence Of A Pretreating Reagent

The cellulose is first dried to a fixed optimum moisture content by pretreating with acetic acid to swell the cellulose. This permits the acetylation reagent to diffuse into the fiber more readily. The time of treatment varies from 15 minutes to several hours, depending upon the pretreating liquid and the amount used.

(2) The Acetylation Mixture Consists Of Acetic Anhydride, Acetic Acid Or Methylene Chloride And Sulfuric Acid

The acetylation of cellulose is highly exothermic and temperature control is very important. In the process in which acetic anhydride, acetic acid and sulfuric acid are used, two types of acetylators have been employed - the brine cooled, sigma-bladed mixer, and the cylinder mixer which rotates on a horizontal axis. These reactors are large enough to acetylate 200-600 lb of cellulose per charge. The temperature is controlled between 5 - 45°C.

In the methylene chloride process, much of the reaction heat can be dissipated in refluxing the methylene chloride, so that large batches can be acetylated. Batches of up to 7,000 lb have been handled by this process, although most reactors are smaller. The reactors are horizontal bronze alloy or stainless-steel cylinders equipped with stirring blades on a horizontal axis.

(3) The Acetylated Dope Is Hydrolyzed

The water content of the dope is adjusted to 5-10%. The rate of hydrolysis is controlled by the sulfuric acid/water ratio and by the hydrolysis temperature, which is generally slightly above room temperature. The catalyst/water ratio must be kept below a certain level to avoid degradation. This can be accomplished by increasing the water content or decreasing the amount of catalyst (by neutralization), depending upon how rapid a hydrolysis is desired. The hydrolysis is then arrested by neutralizing the sulfuric acid catalyst, usually with sodium acetate.

The hydrolyzers are vessels large enough to handle one or more acetylation batches. Some are equipped with agitators, generally rotating blades on a vertical shaft. When the hydrolysis is carried out without agitation, the product is precipitated in another vessel in which the reaction mixture may be agitated. Hydrolyzers are generally of stainless-steel, copper, bronze alloy or glass-lined steel.

(4) Precipitation And Purification Involves Generation Of Significant Volumes Of Dilute Acetic Acid

Cellulose acetate is precipitated by diluting the dope with water to a point somewhat short of precipitation and then mixing with an excess of aqueous acetic acid solution with vigorous agitation. It is then purified by washing with water, 10% sodium bicarbonate or magnesium ion to neutralize the sulfuric acid catalyst, centrifuged and dried at 95°C.

Acetic acid is a major by-product in the manufacture of cellulose acetate and must be recovered to make the process economical. All wash liquors containing an appreciable amount of acetic acid are combined to give an aqueous solution containing 18-20% acetic acid. Glacial acetic acid is obtained by concentrating this liquor and is returned to the process.

2. THE USUAL TECHNIQUE FOR THE MANUFACTURE OF CELLULOSE NITRATE IS THE MECHANICAL-DIPPER PROCESS

This is a batch process as shown in Exhibit VI-L. A continuous nitration process with countercurrent washing of the crude, acid wet nitrate has been developed but details of the process are not available.

(1) Nitration Is Accomplished With Mixed Acid

About 30 lb of cellulose (containing less than 1% moisture) is added to the dipper containing about 1,600 lb of mixed acid (sulfuric acid and nitric acid). The reaction temperature is controlled by adjusting the temperature of the acid before it is added to the reactor. When nitration is complete (20-30 minutes), the reaction mixture is dropped into a centrifuge which removes most of the acid which is pumped to a tank where it is brought back to strength for reuse by adding concentrated acid. The centrifuged cellulose nitrate is dropped through the bottom of the centrifuge and drowned in water. It is then pumped as a water slurry to the purification area.

(2) Purification Is Accomplished By Boiling In Dilute Mixed Acid Or Water

Purification and stabilization are carried out in batches as large as 12,000 lb in tubs lined with stainless-steel. The cellulose nitrate is first washed to a low level of acidity, then boiling one or more times in very dilute mixed acid or pure water, water-washing between boils. Finally, the product is steeped or boiled in dilute sodium carbonate and washed free of alkali.

(3) Cellulose Nitrate Is Dehydrated Before Shipment Or Storage

It is hazardous to ship or store cellulose nitrate in the dry state and it is shipped either water-wet or, more commonly, alcohol-wet. Alcohol-wet cellulose nitrate is often used without drying, since alcohol is generally part of the formulation in which cellulose nitrate will be used. It is prepared by compressing the water-wet material into blocks at pressures of 17 atm, and pumping alcohol through the blocks at this pressure. The compressed blocks are then broken mechanically, and the alcohol-wet (about 35% alcohol) material is shipped in galvanized steel drums.

EXHIBIT VI-L
Environmental Protection Agency
FLOW SHEET:
THE MECHANICAL DIPPER PROCESS
FOR NITRATING CELLULOSE (37)

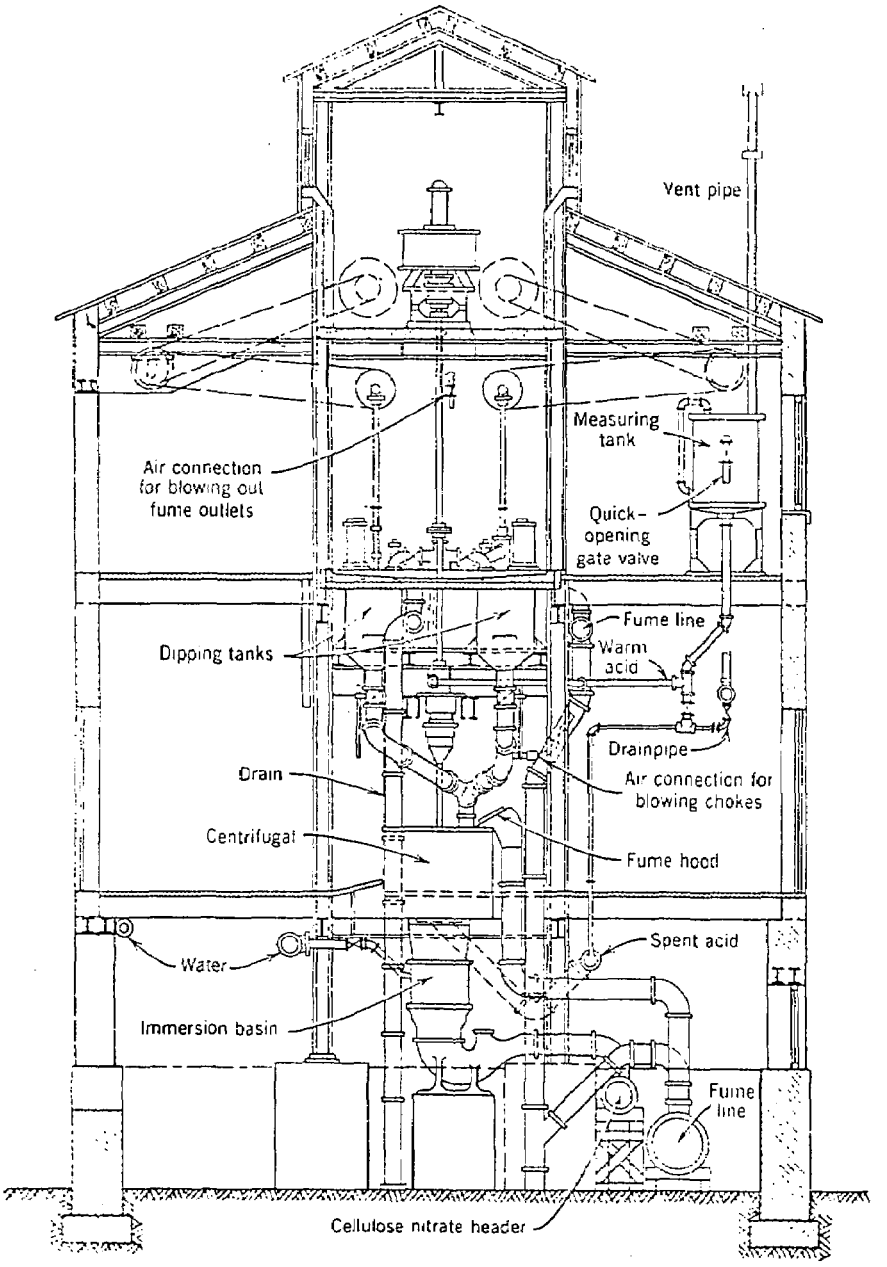

Building and equipment for the mechanical dipper process for nitrating cellulose

3. ACETIC ACID AND NO_x FUMES CHARACTERIZE THE PREPARATION OF CELLULOSE ACETATE AND NITRATE RESPECTIVELY

Methylene chloride vapors may also be associated with cellulose acetate manufacture. Sulfuric acid fumes may emanate from both acetate and nitrate production. Acetic acid vapors can occur in both the manufacture and acid recovery cycle.

NO_x fumes evolve during nitration of cellulose. Alcohol vapors are vented in the dehydration cycle.

VI-M EPOXY RESINS

1. MANUFACTURE IS A LOW TEMPERATURE BATCH OPERATION

(1) Each Producer Has Developed His Own Technique, But The Following General Procedure Is Applicable

Bisphenol A, epichlorohydrin and caustic are added together to the reactor and heated to 50-60°C. The exothermic heat of reaction raises the temperature and must be controlled to 90-95°C. Excess epichlorohydrin is removed after condensation is complete, by vacuum distillation. (Toluene may be added to facilitate removal of the salt formed.) The resin is washed with warm water, filtered and dried at 150°C under vacuum. A thin film evaporator may be used to remove last traces of solvent/water.

(2) Most Epoxy Resin Plants Have Similar Layouts And Equipment

Equipment layout for a typical resin plant is shown in Exhibit VI-M. This exhibit is for the manufacture of solid resins. A liquid resin plant would be essentially the same except there would be no flaking equipment. Equipment requirements include a jacketed steel or stainless steel reactor equipped with a reflux column, agitator and condenser, a separator tank for washing the resin, a filter, a finishing kettle for removing the last traces of solvent/water, a Rodney-Hunt thin film evaporator may be alternate equipment, and a flaker for solid resins.

(3) There Are Three Major Raw Materials Used

Between 80-90% of the epoxy resins produced are made from Bisphenol A and epichlorohydrin. Sodium hydroxide is the other major raw material used as a catalyst for the condensation and reacts to dehydrohalogenate the resultant bisphenol glycidyl chlorhydrin and is thereby removed from the reaction as salt.

EXHIBIT VI-M
Environmental Protection Agency
FLOW SHEET:
EPOXY RESIN PRODUCTION (38)

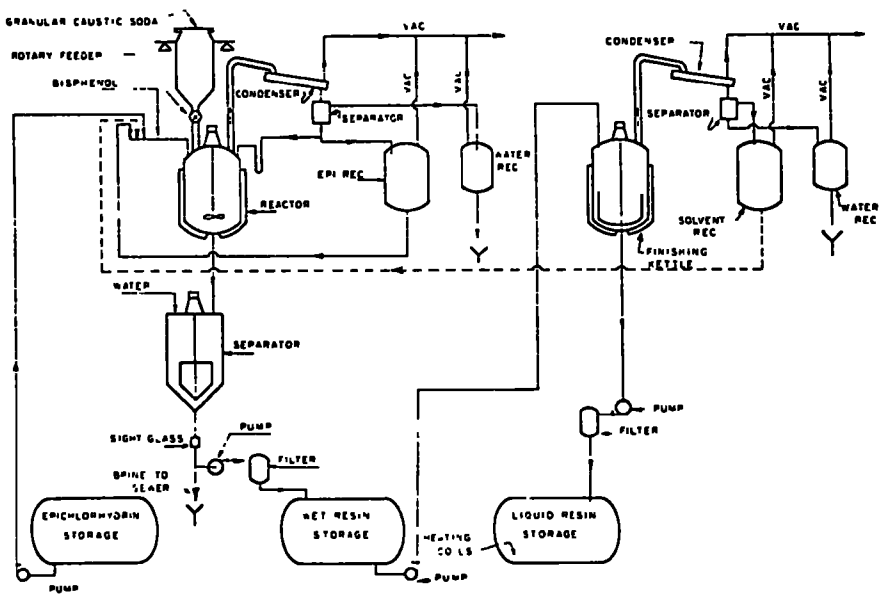

2. THERE ARE SEVERAL POTENTIAL EMISSION SOURCES

In-plant emissions occur as a result of the manufacturing process.

- Vapors can escape through reactor packings and pumps.
- Vapors escape by way of the vacuum pumps on distillation columns.
- There is some entrainment of epichlorohydrin in wash liquors.
- Liquid from pumps.
- Hot resin odor on flakers.

3. THERE ARE THREE PRINCIPAL EMISSIONS

- Bisphenol A has a mild phenolic odor, b.p. = 220°C (4 mm) minimal odor/hazard.
- Epichlorohydrin has a boiling point of 115°C and is highly volatile, unstable and narcotic with a chloroform-like odor. It is absorbed and accumulated by the body and can lead to serious physiological, particularly nerve, disorders.
- Methanol has a boiling point of 64.5°C and is poisonous.

VI-N POLYAMIDES

Polyamide resins can be divided into two principal types; (1) Nylon type, and (2) Non-nylon type. The former are primarily those based on Nylon 6 and Nylon 66 and account for over 80% of polyamide resins produced. The non-nylon resins are based primarily on dimerized polycarboxylic acids and polyamines.

1. POLYAMIDE RESIN PROCESSES ARE HIGH TEMPERATURE, LOW PRESSURE BATCH OR CONTINUOUS OPERATIONS

(1) Nylon 6 Involves Heating Caprolactam With A Catalyst And Chain Terminator

Schematics for batch and continuous polymerizations are shown in Exhibit VI-N1.

Molten caprolactam is mixed with water, catalysts, stabilizer and delusterant (if fibers are to be made) and is fed into a reactor which is operated at about 500°F. The mass slowly proceeds down the reactor which is usually divided into several zones. The overall reaction is slightly exothermic and heat exchange is provided by Dowtherm. The reactor effluent consists of molten polymer, monomer, oligomers and water. Monomer and oligomer constitute 10-15% of the reactor effluent.

There are two methods being used to purify the crude polymer and recover unreacted polymer. In the first, the polymer is cast into ribbon form, quenched and cut into chips. Unreacted monomer and some oligomer are removed from the chips by extraction with hot water. The water is sent to monomer recovery where the oligomers are depolymerized and the monomer is dehydrated and returned to the system. The chips are dried and are then ready for melting and spinning or bagging.

In the second method, the molten polymer exiting from the reactor is sent to a vacuum distillation column where monomer, water and oligomers are removed overhead. The molten polymer can then be spun directly into fibers or cut into chips for bagging.

EXHIBIT VI-N1
Environmental Protection Agency
FLOW SHEET:
NYLON 6 PRODUCTION [39]

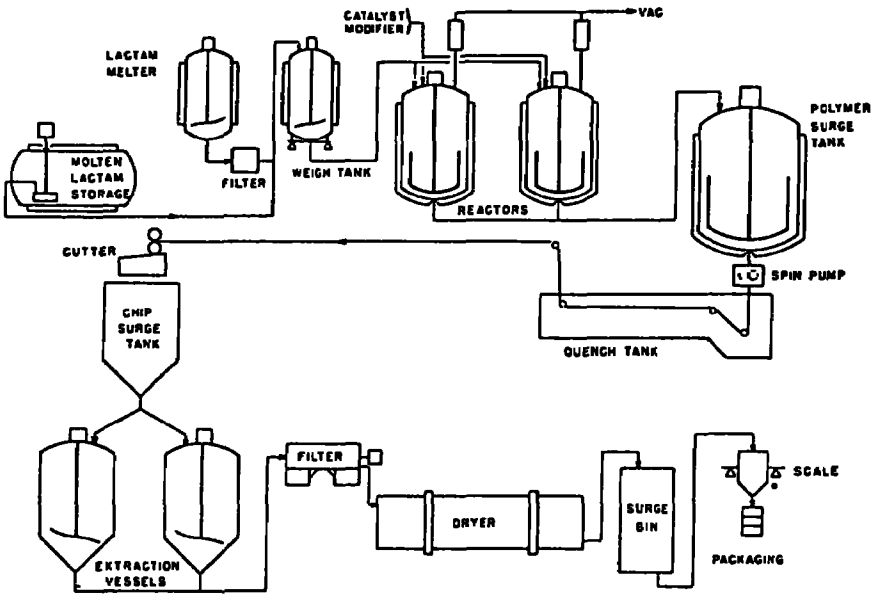

Batch polymerization of Nylon 6.

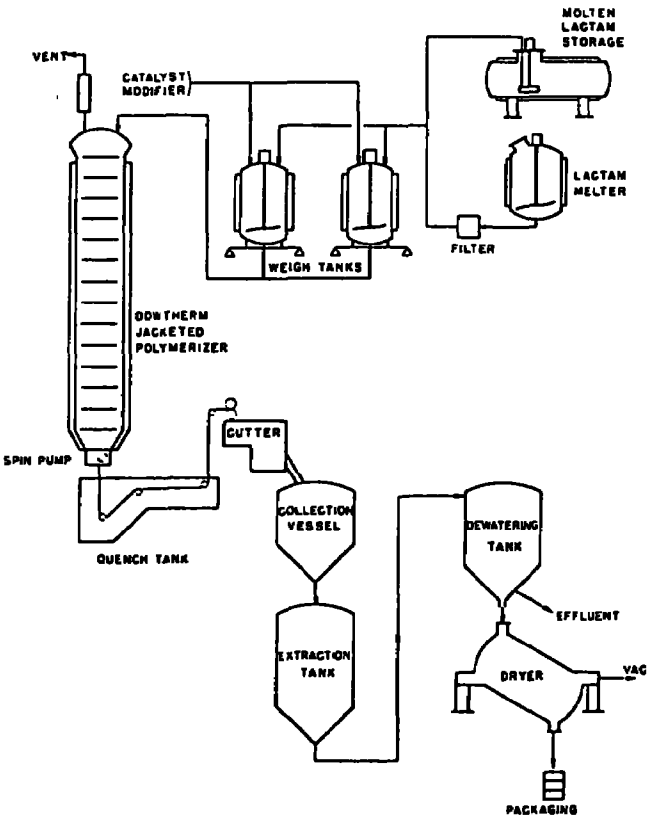

Continuous polymerization of Nylon 6.

(2) Nylon 66 Is Made By Polymerization Of Nylon Salt (hexamethylenediammonium adipate)

The polymerization can be either batch or continuous. A typical plant and schematic is shown in Exhibit VI-N2.

Nylon monomer (nylon salt) is usually fed as a water suspension or homogeneous mixture to an evaporator where it is concentrated to a 50-60% aqueous slurry by removal of water. This aqueous slurry together with additives such as 0.5% by weight acetic acid as a chain terminator (viscosity, m. wt. control), TiO_2 as a delusterant, are pumped to an autoclave reactor. Here temperature is increased to 260°C - 280°C and pressure is allowed to build to 17 atm by controlled venting of the steam produced from the condensation polymerization. Any water remaining after this point is reached is then removed by lowering the pressure to atmospheric while maintaining a constant temperature. The polymer (12,000 - 20,000 m.wt.) is a clear melt which is removed from the reactor under nitrogen, cooled and cast (pelletized) quickly as it is not stable at high temperatures. The solid nylon 6,6 resin is flaked or chipped and can then go to product storage. These flakes can be remelted and spun into filaments or molded to various shapes.

Continuous Process

A more recent development in nylon 6,6 manufacture is the continuous process. The chemistry of this reaction is identical to the batch process. However, where it may take 2-4 hours to convert nylon salt to finished polymer in the batch process, monomer goes to polymer in the continuous process in about 5 minutes.

Nylon salt solution is fed to a thin film evaporator at about 110°C, where the bulk of the water of solution is removed. Any additives needed are generally added after the evaporation stage and these plus the dewatered monomer are fed to another thin film evaporator held at 230°C and elevated pressure where the condensation polymerization takes place and the water is removed as steam. Molten polymer goes to a "flasher" at atmospheric pressure to remove more water of condensation. The polymer may be put through a finishing step at 280°C to be sure polymerization is complete or it may by-pass this step. In any event the hot molten polymer goes directly to spinning, drawing and beaming operations rather than cooling and casting into resin as in the batch process.

EXHIBIT VI-N2
Environmental Protection Agency
FLOW SHEET:
NYLON 66 PRODUCTION [40]

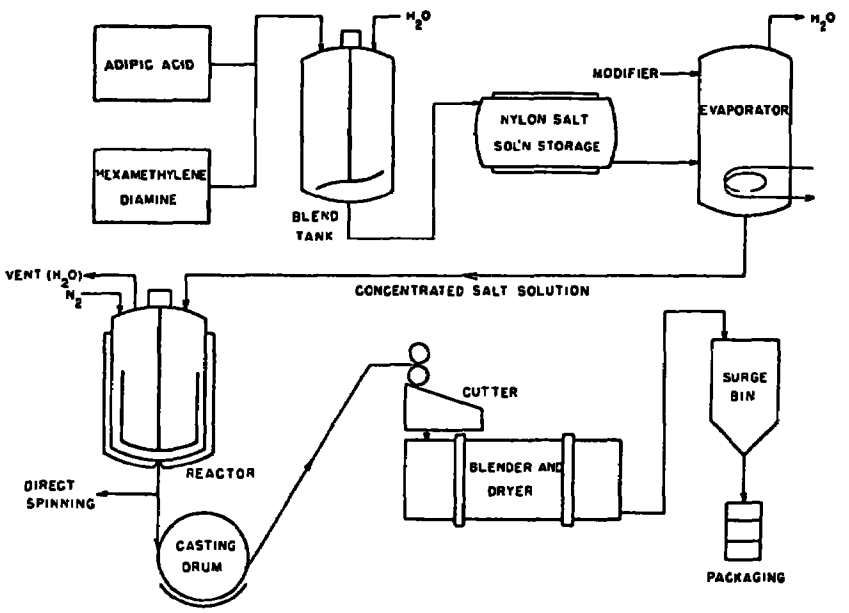

Polymerization of Nylon 66.

(3) The Non-Nylon Polyamides Are Prepared By Condensing Dimerized Polycarboxylic Acids With Polyamines

The process is a batch operation. Initial condensation is conducted at 100°C until all water of reaction is distilled off. Increase the temperature to 150 - 250°C to advance the polymerization to desired viscosity or molecular weight. The molten product is packaged in metal containers directly.

(4) Soluble Polyamides Which Are Copolymers Of Nylon 6, Nylon 66, And Nylon 610 Are Available.

These copolymers are usually available as solutions containing water, alcohol (methanol, ethanol or isopropanol) or other solvents. Solutions of 30-55% polyamides can be prepared.

2. THERE ARE SEVERAL POTENTIAL EMISSION SOURCES

- The driers and surge tanks are principal sources of emissions.
- The vacuum lines are also potential sources of emissions.

3. EMISSIONS ARE MINIMAL

(1) Acetic Acid Is The Main Offender In Nylon 6 Production

This modifier could vaporize in the evaporator stage as well as from reactor venting.

(2) Hexamethylene Diamine And Acetic Acid Could Be Emitted In Nylon 66 Preparation

Hexamethylene diamine (ammoniacal odor) could come from handling and on venting the blend tank.

SECTION VII

PRIORITY DECISION MODEL

SECTION VII

PRIORITY DECISION MODEL

A decision model is a useful tool in establishing priorities among the various sectors of the chemical/plastics industry with appropriate weight given to each of the principal factors considered in formulating and implementing air pollution control policy and defining the direction of related research and development.

The model defined in this section assimilates the systems analysis criteria of the study in a standardized fashion to enable the determination of priorities and the selection of candidates for detailed study.

Exhibit VII-1 presents a summary of the required systems analysis factors featured in the priority decision model. The detailed characterization of each broad factor appears in subsections 2, 3, 4 and 5.

1. THE DECISION MODEL IDENTIFIES POLYURETHANES AND ACRYLICS IN THE CHEMICAL/PLASTICS INDUSTRY AS THE LEADING CANDIDATES FOR DETAILED STUDY

Exhibit VII-2 presents a summary of the priority decision model. The overall selection index number ranges from a low of 23.3 to a high of 160.2. Within this range, the 14 chemical/plastics industry sectors studied are well differentiated.

Polyurethanes with an overall selection index number of 160.2 and acrylics with 137.3 are identified as candidates for detailed study.

Subsection 2 discusses the detailed derivation of the production and population exposure related index in the model.

Subsection 3 discusses the detailed derivation of the total potential emission index in the model.

Subsection 4 describes the derivation of the hazard index, while subsection 5 describes the odor index.

EXHIBIT VII-1
Environmental Protection Agency
SUMMARY OF FACTORS IN THE
PRIORITY DECISION MODEL

Broad Systems Analysis Factors For Each Chemical/Plastics Industry Sector		Sub-Factors	Sub-Factor Weight
A:	Market and Production from data in Section V	. A_1=Total Potential Population Exposed	0.4
		. A_2=Population Exposure Potential of the Average Plant	0.2
		. A_3=Plastic Production Volume	0.2
		. A_4=Production Growth Trend	0.2
B:	Emission Potential from information in Section VI	. Process Technology Assessment	1.0
C:	Hazard Potential from information in Section VI	. Toxicity (TLV) of Principal Likely Emissions	1.0
D:	Odor Potential from information in Section VI	. Odor Threshold of Principal Likely Emissions	1.0

Priority Decision Formula

AC + BC + AD = R, where R is the overall rating

The formula has the following features:

- The hazard factor, C, appears twice as a multiplicant and is given significant emphasis, as required by EPA
- The product of A x C emphasizes situations where the hazard potential is high and the potential population exposure is great
- The product of B x C emphasizes situations where hazard potential and emission potential are high and, therefore, the relative magnitude of potential concentrations of hazardous substances at receptor locations are factored in qualitatively
- The product of A x D emphasizes the relative magnitude of the potential nuisance to the population from odorous substances

Source: Snell (and EPA and Snell in development of priority decision formula)

EXHIBIT VII-2
Environmental Protection Agency
SELECTION OF PLASTICS SECTORS
FOR DETAILED STUDY

Selection formula: AC + BC + AD = R

Plastic	A Production & Population Exposure Related Index Number	B Emission Potential Index Number	C Hazard Index Number	D Odor Index Number	R Overall Selection Index Number	Priority Order
Vinyl Resins	10.0	7.0	4.0 (1)	2.3	91.0	8
Styrene Resins	8.5	7.4	2.8	7.4	107.4	6
Acrylics	8.5	5.0	4.5	9.0	137.3	2
Alkyds	8.0	4.8	6.6	5.0	124.5	3
Polyurethanes	8.0	2.6	9.3	7.7	160.2	1
Phenolic and Other Tar Acid Resins	7.5	4.0	5.2	6.9	111.6	4
Polyethylene and Copolymers	6.5	8.0	1.3	2.5	35.2	12
Polyesters	6.5	4.8	6.6	5.3	109.1	5
Amino Resins	6.5	5.3	4.8	6.8	100.8	7
Cellulosics	6.0	6.7	3.5	4.3	70.3	10
Polyamides	5.5	7.0	1.2	1.5	23.3	14
Polypropylene	5.0	8.8	1.7	1.9	33.0	13
Coumarone-Indene and Petroleum Resins	5.0	7.1	4.2	7.7	89.3	9
Epoxy Resins	3.5	4.2	5.4	4.1	56.0	11

(1) Based on 50 ppm TLV for vinyl chloride

Source: Snell

2. THE PRODUCTION AND POPULATION EXPOSURE RELATED INDEX WAS DEVELOPED CONSIDERING TOTAL POTENTIAL POPULATION EXPOSED, POPULATION EXPOSURE POTENTIAL OF THE AVERAGE PLANT, PLASTIC PRODUCTION VOLUME AND GROWTH TREND

To develop the production and population exposure related index, Column A in Exhibit VII-2, a decision matrix approach was used.

A decision matrix can be depicted as a rectangular grid containing values for a specific set of co-ordinates. In this case, the vertical co-ordinate contains the plastics under consideration, and the horizontal co-ordinate lists the variables under consideration. This matrix is shown in Exhibit VII-3.

(1) The Population Exposed To Potential Emissions From The Manufacture Of Each Plastic Was Estimated Using SMSA And State Population Densities

In developing a population exposure index, we considered the average population per square mile for the major Standard Metropolitan Statistical Areas (SMSA's) with which each plant location could be identified or the average population per square mile for the state with which each plant could be identified, if no SMSA correlation was apparent. The U.S. Department of Commerce's Statistical Abstract of the United States, 1972, was the source of these data.

Production locations for each resin, regardless if there were more than one resin manufactured at this site, were located by SMSA and/or state using the information from Section V. The number of plant locations, or establishments listed is, therefore, significantly more than that given by the Bureau of Census.

The total potential population exposed for each resin was estimated by the following procedure:

- assume that the area of influence of each plant is one square mile
- correlate each plant location with an SMSA

EXHIBIT VII-3
Environmental Protection Agency
DEVELOPMENT OF THE PRODUCTION AND POPULATION EXPOSURE RELATED INDEX

Plastic	A_1 Total Potential Population Exposed	A_2 Population Exposure Potential of the Average Plant	A_3 Plastic Production Volume	A_4 Growth Trend	A_{1-4} Total Score	A^1 Index
Polyethylene and Copolymers	2	1	5	5	13	6.5
Vinyl Resins	8	3	4	5	20	10.0
Styrene Resins	6	3	3	5	17	8.5
Polypropylene	2	1	2	5	10	5.0
Phenolic and Other Tar Acid Resins	8	2	1	4	15	7.5
Polyesters	6	2	1	4	13	6.5
Amino Resins	8	1	1	3	13	6.5
Alkyds	10	4	1	1	16	8.0
Acrylics	8	3	1	5	17	8.5
Coumarone-Indene and Petroleum Resins	4	4	1	1	10	5.0
Polyurethanes	8	3	1	4	16	8.0
Cellulosics	4	5	1	2	12	6.0
Epoxy Resins	2	2	1	2	7	3.5
Polyamides	4	2	1	4	11	5.5
Rosin Modifications	6	3	1	1	11	5.5

1 - Total Score normalized on a scale of 10. See Exhibit VII-2 for use of index

Source: Snell

- sum the average population per square mile for each plant associated with an SMSA or if a plant is not associated with an SMSA use the average population per square mile for the state in which each plant is located.

Values for the total potential population exposed for each resin are tabulated in decreasing order in Exhibit V-4, and scoring values of 2 to 10 are based on total population exposed as follows:

Score 2 = less than 15,000
Score 4 = 15,000 to 50,000
Score 6 = 50,001 to 100,000
Score 8 = 100,001 to 200,000
Score 10 = over 200,000

(2) <u>The Population Exposure Potential Of The Average Plant Indicates To What Extent Each Plastic Producing Industry Is Located In Densely Populated Areas</u>

The population exposure potential of the average plant in each plastic manufacturing category is estimated by dividing the total potential population exposed by the number of plants. Values for the population exposure potential of the average plant in each plastic manufacturing category are tabulated in decreasing order in Exhibit VII-5, and are scored from 1 to 5 as follows:

Score 1 = less than 500
Score 2 = 500 to 1,000
Score 3 = 1,001 to 1,500
Score 4 = 1,501 to 2,000
Score 5 = over 2,000

Plastic categories appearing at the top of the list represent relatively urban industries in terms of plant sites while those toward the bottom of the list represent relatively rural siting.

(3) <u>The Total Volume Of Plastic Production Is A Factor</u>

Broadly, the greater the volume of resin produced, the greater the odor or hazard potential, particularly if differences in production volumes are large. The percent volume production is shown in Exhibit V-4. These values are scored from 1 to 5 and are entered under Column A_3, Plastic Production Volume, in Exhibit VII-3.

EXHIBIT VII-4
Environmental Protection Agency
TOTAL POPULATION EXPOSURE
MEASURE

Resin System	Number of Plants	Total Potential Population Exposed[1,2]	Score[3]
Alkyds	173	264,500	10
Vinyl Resins	153	171,800	8
Amino Resins	166	164,800	8
Phenolic and Other Tar Acid Resins	168	164,600	8
Acrylics	127	150,100	8
Polyurethanes	86	122,200	8
Rosin Modifications	64	90,800	6
Polyesters	81	78,200	6
Styrene Resins	65	74,200	6
Coumarone-Indene and Petroleum Resins	20	30,200	4
Cellulosics	8	20,900	4
Polyamides	24	18,700	4
Polyethylene and Copolymers	25	11,500	2
Epoxy Resins	8	7,800	2
Polypropylene	11	3,200	2

[1] Assuming the area of potential exposure per plant is one square mile

[2] Weighted Average Population Exposed for a given Resin System =

$$\sum_i \begin{pmatrix} \text{Plant} \\ \text{Location} \end{pmatrix} \begin{pmatrix} \text{Average Population per Square Mile} \\ \text{associated with location i in SMSA} \end{pmatrix} +$$

$$\sum_j \begin{pmatrix} \text{Plant} \\ \text{Location} \end{pmatrix} \begin{pmatrix} \text{Average Population per Square Mile in State associated} \\ \text{with j } \underline{\text{if}} \text{ correlation with SMSA is not possible} \end{pmatrix}$$

[3] See Exhibit VII-3, Colume A_1 for use of scores to indicate total potential population exposed.

Source: Information in Section V and Snell estimates

EXHIBIT VII-5
Environmental Protection Agency
THE POPULATION EXPOSURE POTENTIAL
OF THE AVERAGE PLANT

Weighted Average

Resin System	Population Exposure[1] Index Per Plant Per Square Mile	Score[2]
Cellulosics	2,620	5
Alkyds	1,530	4
Coumarone-Indene and Petroleum Resins	1,510	4
Polyurethanes	1,420	3
Rosin Modifications	1,420	3
Acrylics	1,180	3
Styrene Resins	1,140	3
Vinyl Resins	1,120	3
Phenolic and Other Tar Acid Resins	980	2
Epoxy Resins	970	2
Polyesters	965	2
Polyamides	980	2
Polyethylene and Copolymers	460	1
Polypropylene	290	1
Amino Resins	100	1

1 Total Potential Population Exposed ÷ Number of Plants, shown in Exhibit VII-4

2 See Exhibit VII-3, Column A_2, for use of scores to indicate the population exposure potential of the average plant

Source: Snell

Score 1 = less than 6.2% of total production
Score 2 = 6.2% to less than 12.4% of total production
Score 3 = 12.4% to less than 18.6% of total production
Score 4 = 18.6% to less than 24.8% of total production
Score 5 = 24.8% of total production or greater

(4) Growth Rate And Need For Additional Capacity Is A Factor Related To Future Production

The average rate of consumption over the near future will determine if new capacity will be required. Exhibit V-1 summarizes the outlook for the resins studied through 1977, assuming normal trends, that is, there will be no impact upon growth from the current shortages of raw materials.

Scores from 1 to 5 were assigned as shown below and entered under Column A_4, Growth Trend, of Exhibit VII-3.

Score 1 = negative growth rate or no growth
Score 2 = less than 5% growth rate and capacity adequate
Score 3 = less than 5% growth rate and new capacity will be needed or 5-10% growth rate and capacity adequate
Score 4 = 5-10% growth rate and new capacity will be needed or greater than 10% growth rate and capacity adequate
Score 5 = greater than 10% growth rate and new capacity will be needed

3. THE EMISSION POTENTIAL INDEX WAS DEVELOPED FROM STANDARDIZED EVALUATION AND COMPARISON OF THE MAJOR POLYMERIZATION PROCESSES

To develop the emission potential index a decision matrix approach was used, and is described below.

Polymer plants operate under widely differing conditions. It is still possible, however, to consider certain operating functions common to all plastic processes. These are:

- Receiving and storage of process chemicals
- Purification of monomers and solvents

- Prepolymerization
- Polymerization
- Polymer separation
- Compounding.

Each of the above functions will, to some degree, contribute to the total emissions of a process. Individually, each can be rated on the basis of a very high (10) to a very low (2) emission potential related to the variable factors of process design, operating conditions and the chemistry involved. It is also understood, that the emission contribution of each factor may be different and must be weighed to reflect its relative importance to the total emission potential of the process. The sum of the values obtained (intensity rating times percent of total contribution) will represent the best relative estimate of the emission potential for that plastic process. Repetition of this analysis for all the plastic processes will produce a series of index numbers which can be compared on the basis of seriousness of potential emissions.

For example, the emission potential, during storage of a liquified gas may be very high (rating of 10); during polymerization, the emission potential may be low (rating of 4). But, the relative emission contribution from storage may only be 10% as compared to polymerization of 90%, so that the total emission potential is the sum of (10 x 0.1) plus (4 x 0.9) or 1 plus 3.2 or a total of 4.2.

Exhibit VII-6 shows the decision matrix used for process screening. The vertical co-ordinate lists the factors under consideration, and the horizontal co-ordinate indicates the emission ratings assigned, based on the operations within each phase.

Manufacturing processes range from very complex to rather simple procedures, and from single large operating units to small multi-batch units. For the purpose of this evaluation, all processes were considered in their simplest unit operations.

Appendix 2 presents the technical evaluation grids for each plastic class. A summary listing of the results ranked according to total emission potential is shown in Exhibit VII-7.

EXHIBIT VII-6
Environmental Protection Agency
DECISION MATRIX FOR EMISSION POTENTIAL

EMISSION/ODOR POTENTIAL / OPERATING FUNCTION	VERY HIGH (10)	HIGH (8)	MEDIUM (6)	LOW (4)	VERY LOW (2)
RECEIVING, STORAGE AND HANDLING OF PROCESS CHEMICALS	gases or liquified gases	Liquids with high vapor pressure (over 25 mm Hg)	Liquids with low vapor pressure	Solids with high vapor pressure (over 25 mm Hg)	Solids with low vapor pressure
PURIFICATION OF MONOMER AND SOLVENTS	Venting of monomer and solvent purification systems	Venting of monomer purification system	Venting of solvent purification system		
PREPOLYMERIZATION			Premixing of gaseous monomers with catalyst and pre-polymerization	Mixing of monomer with solvent compressing gases	Mixing of monomers with water melting solids
POLYMERIZATION	Pressure over 70 atm and above the b.p. of ingredients	Pressure between 10-70 atm and above the b.p. of ingredients	Pressure below 10 atm and above the b.p. of ingredients	Atmospheric pressure and reflux temp.	Atmospheric pressure and below the b.p. of ingredients
POLYMER SEPARATION	Polymer injected into solvent or water, filtered, dried and extruded	Reaction mass dried and extruded	Reaction mass dissolved in solvent	Reaction mass dispersed in water	Reaction mass stored directly
COMPOUNDING	Direct casting or molded	Partial polymerization or "B" staging	Mixing with volatile solvents and plasticizer	Mixing with solids and making molding compounds	

Source· Snell

EXHIBIT VII-7
Environmental Protection Agency
TOTAL POTENTIAL EMISSION
INDEX

Plastic	Index Number[6]
Polypropylene	8.8
Polyethylene[1] and Copolymers	8.0
Styrene[2] Resins	7.4
Coumarone-Indene and Petroleum Resins	7.1
Vinyl[3] Resins	7.0
Polyamides[4]	7.0
Cellulosics	6.7
Amino Resins	5.3
Acrylics[5]	5.0
Alkyds	4.8
Polyesters	4.8
Epoxy Resins	4.2
Phenolic and Other Tar Acid Resins	4.0
Polyurethanes	2.6

1. 70% LD and 30% HD Polyethylene
2. 76% Polystyrene and 24% ABS
3. 94% PVC, 5% PVAc and 1% PVAlc
4. 80% Nylon 66 and 20% Nylon 6
5. 50% Emulsion and 50% Solution
6. See Exhibit VII-2 for use of the index

Source: Snell, details in Appendix 2

(1) Receiving And Storage Of Process Chemicals (Monomers, Solvents, Catalysts) Is A Source Of Emissions

Emissions originating from storage facilities are dictated, to a large extent, by the physical and chemical characteristics of the raw materials used in the process. Most of the emissions are due to venting of storage tanks, line and valve leaks and spillage during handling. Ratings in terms of potential emissions can range from very high (10) to very low (2) as follows:

10 - gases or liquified gases
8 - liquids with high vapor pressure (greater than 25 mm Hg ($25^{o}C$))
6 - liquids with low vapor pressure
4 - solids with high vapor pressure (greater than 25 mm Hg ($25^{o}C$))
2 - solids with low vapor pressure

(2) Purification Of Monomers And Solvents Can Be A Potential Source Of Emissions

While most monomers and solvents are available commercially in relatively pure states they may contain trace impurities which must be removed to avoid adverse effects on the polymerization reaction, or they may contain inhibitors which are added to prevent polymerization in transit or storage. Whatever the source of impurity, monomers and solvents must be properly purified when necessary.

In many processes, monomer and solvents are removed from the polymerization and are purified and recycled. Purification usually takes the route of condensation and redistillation. In most instances emissions originate from condenser vents and line leakage. Ratings in terms of potential emissions can range from very high (10) to medium (6) as follows:

10 - Venting of solvent and monomer purification systems
8 - Venting from monomer purification system
6 - Venting from solvent purification system

(3) Another Emission Source Is In The Preparation Or Prepolymerization Phase

Chemicals and catalysts may be diluted, premixed, aged, ground or otherwise treated before polymerization. While some of these processes can be carried out in separate vessels, reactors or tanks, they may also be carried out directly in the reactor before polymerization. The emission potential may range from medium (6) to low (2) as follows:

6 - premixing of gaseous monomers with catalyst and prepolymerizing
4 - mixing of monomers with solvent
- compressing gases
2 - mixing of monomers with water
- melting solids
- preheating liquids

Emissions can occur as a result of leaks and purging and venting of prepolymerization equipment.

(4) The Polymerization Section Is A Prime Source Of Emissions

There are many conditions and combinations of conditions in which polymerization takes place. Polymerization methods include bulk, solution, suspension and emulsion. Operating conditions can range from very high temperatures and/or pressures to low pressure and ambient or cooler temperatures. The polymerization can be continuous or batch or may even start as one type and end as another, i.e., nylon 66 polymerization starts as a solution and at the end is essentially a bulk polymerization.

Nevertheless, certain generalities must be assumed in order to evaluate the emission potentials of this phase of the process. As would be expected, the emission potential can range from very high (10) to very low (2). Emissions occur through reactor venting agitator packing, piping and valve leaks, condenser venting and/or reactor leaks. Ratings are as follows:

10 - Pressure and temperature above 70 atm and the boiling point (at 760 mm) of the ingredients respectively
8 - Pressure and temperatures of 10-70 atm and the boiling point (at 760 mm) of the ingredients respectively
6 - Pressure and temperature below 10 atm and above the boiling point (at 760 mm) of the ingredients respectively
4 - Atmospheric pressure and reflux temperature
2 - Atmospheric pressure and temperature below the boiling point (at 760 mm) of the ingredients respectively.

(5) Many Operations Can Be Involved In The Separation Of Polymers From The Reaction Mass

This section of the total polymerization process can range from a single operation to a combination of operations culminating in production of a solid or liquid product, the former being essentially a "pure polymer" and the latter being a polymer in a solution or emulsion form.

- Emissions can occur in any single or combination of several operations. Operations most commonly used include:

  - Precipitation
  - Dilution with solvent or water
  - Extrusion
  - Flaking
  - Drum drying
  - Spray drying
  - Various materials handling operations.

- All operations contribute to total emissions and the intensity range can vary from very high (10) to very low (2).

  10 - Polymerization mass injected into water or solvent, filtered, washed, dried and extruded
  8 - Polymerization mass dried and extruded
  6 - Polymerization mass is dissolved in solvent
  4 - Polymerization mass is dispersed in water or solvent
  2 - Polymerization mass packaged directly.

(6) In Some Cases Further Compounding Within The Chemical/Plastics Industry Should Be Considered

While the primary function of the Chemical/Plastics Industry is the manufacture of plastics, the market is such that many of the major plastics must be compounded further. This operation can contribute to emissions, and can include any one or a combination of operations including remelting, extruding, grinding, milling, spray drying and other drying operations.

Emissions result from drier exhaust gases, extruder exhausts, monomer or low molecular weight polymer evaporation, decomposition of the plastic during the operation, solvent addition or removal of residual solvent from previous operations, and others. Emission potential can range from very high (10) to low (4).

10 - Direct casting or molded
8 - Partial polymerization or "B" staging
6 - Mixing with volatile solvents and plasticizers
4 - Mixing with solids and making molding compounds

(7) Assignment Of Intensity Ratings Must Be Flexible

The intensity ratings assigned to the various process factors, discussed in the previous section are based on the observation that there are many operations and operating conditions common to several processes. There are, of course, many others that do not fall into any of these classifications, and arbitrary ratings, based on expert opinion, must be assigned to them. Secondly, detailed data on emission factors may shift the ratings.

4. THE HAZARD POTENTIAL INDEX EXPRESSES THE SEVERITY OF THE HUMAN EXPOSURE HAZARD ASSOCIATED WITH THE PRINCIPAL POTENTIAL PLANT EMISSIONS

Toxic hazard is determined from the concentration, measured in parts of volume of a gas or vapor per million parts by volume of air, below which ill effects are unlikely to occur to an exposed worker (during an eight-hour working day). This concentration is the threshold limit value (TLV) for each chemical. The population in the vicinity of a producing plant is potentially exposed to the emissions from this plant. The TLV concentrations are a useful index of the relative hazardousness of the chemicals to which the surrounding populations could be exposed. TLV values provide a standardized comparison base, and this data is generally available.

The hazard index rating is based on the approach expressed in Table G-12 (Determination of Hazard Potential) published in the Federal Register, 36, No. 105, page 10515, May 29, 1971. This table rates the hazard potential on a scale from A to D, as follows:

A - TLV at a level of 0 - 10 ppm
B - TLV at a level of 10.1 - 100 ppm
C - TLV at a level of 101 - 500 ppm
D - TLV over 500 ppm

We have refined this scale to enable sensitive differentiation between the hazard potential of each plastic sector, and to account for the fact that ambient concentrations are likely to be significantly lower than the work place concentrations addressed by TLV's. The hazard scoring used in this study follow:

Score 10 - TLV is 0.02 ppm or less
Score 9 - TLV is 0.1 ppm or less but greater than 0.02 ppm
Score 8 - TLV is 1.0 ppm or less but greater than 0.1 ppm
Score 7 - TLV is 2.0 ppm or less but greater than 1.0 ppm
Score 6 - TLV is 5.0 ppm or less but greater than 2.0 ppm
Score 5 - TLV is 25 ppm or less but greater than 5.0 ppm
Score 4 - TLV is 75 ppm or less but greater than 25 ppm
Score 3 - TLV is 150 ppm or less but greater than 75 ppm
Score 2 - TLV is 400 ppm or less but greater than 150 ppm
Score 1 - TLV is greater than 400 ppm

Appendix 3 identifies the most likely emittants from each process with safety data when available.

Determination of the hazard potential index for most probable emissions in each plastic group is shown in Appendix 4 . For the manufacture of each resin the chemical species most likely to be emitted are identified. A "factor weight" is assigned to each species reflecting its potential importance as an emittant. For each species identified with a given process, its factor weight is multiplied by its hazard rating. The products are summed to provide a hazard index number for the process.

Exhibit VII-8 summarizes hazard index number by resin category.

5. THE ODOR POTENTIAL INDEX IS BASED ON DETECTABILITY

There have been several attempts to describe odor sensations. The best known classification is that whereby odors are classified as spicy, flowery, fruity, resinous, foul and scorched. This classification is dependent upon memory and association and few odors can be associated directly with any of these specific adjectives.

We, therefore, elected to use the Odor Threshold (OT). This is the concentration at which a trained person can first detect an odor. We are not considering the intensity nor the classification of odors. Ratings for odor threshold range from 10 for products which can be detected at very low concentrations to 1 for products which are noticeable only at very high concentrations. The odor ratings are based on the same scale as used for expressing hazard potential.

Rating 10 - OT is 0.02 ppm or less
Rating 9 - OT is 0.1 ppm or less but greater than 0.02 ppm
Rating 8 - OT is 1.0 ppm or less but greater than 0.1 ppm
Rating 7 - OT is 2.0 ppm or less but greater than 1.0 ppm
Rating 6 - OT is 5.0 ppm or less but greater than 2.0 ppm
Rating 5 - OT is 25 ppm or less but greater than 5.0 ppm
Rating 4 - OT is 75 ppm or less but greater than 25 ppm
Rating 3 - OT is 150 ppm or less but greater than 75 ppm
Rating 2 - OT is 400 ppm or less but greater than 150 ppm
Rating 1 - OT is greater than 400 ppm

Appendix 3 identifies the most likely emittants from each process with their respective odor threshold values when available.

Determination of the potential odor index for each plastic appears in Appendix 4. The same methodology was used as for developing the hazard indices, described under subsection 4 above.

Exhibit VII-9 summarizes odor index number by resin category.

* * * *

The section that follows presents more detailed information regarding polyurethanes, acrylics, alkyds, high volume resins and emission control technology.

EXHIBIT VII-8
Environmental Protection Agency
HAZARD POTENTIAL INDEX

Plastic	Hazard Index Number[6]
Polyurethanes	9.3
Alkyds	6.6
Polyesters	6.6
Epoxy Resins	5.4
Phenolic and Other Tar Acid Resins	5.2
Amino Resins	4.8
Acrylics[1]	4.5
Coumarone-Indene and Petroleum Resins	4.2
Vinyl Resins[2]	4.0
Cellulosics	3.5
Styrene Resins[3]	2.8
Polypropylene	1.7
Polyethylene and Copolymers[4]	1.3
Polyamides[5]	1.2

1. 50% Emulsion and 50% Solution
2. 94% PVC, 5% PVAc and 1% PVAlc
3. 76% Polystyrene and 24% ABS
4. 70% LD and 30% HD Polyethylene
5. 80% Nylon 66 and 20% Nylon 6
6. See Exhibit VII-2 for use of the index

Source: Snell, details in Appendices 3 and 4

EXHIBIT VII-9
Environmental Protection Agency
ODOR POTENTIAL INDEX

Plastic	Odor Index Number[6]
Acrylics[1]	9.0
Polyurethanes	7.7
Coumarone-Indene and Petroleum Resins	7.7
Styrene Resins[2]	7.4
Phenolic and Other Tar Acid Resins	6.9
Amino Resins[3]	6.8
Polyesters	5.3
Alkyds	5.0
Cellulosics	4.3
Epoxy Resins	4.1
Polyethylene and Copolymers[4]	2.5
Vinyl Resins[5]	2.3
Polypropylene	1.9
Polyamides	1.5

1. 50% Emulsion and 50% Solution
2. 76% Polystyrene and 24% ABS
3. 80% Nylon 66 and 20% Nylon 6
4. 70% LD and 30% HD Polyethylene
5. 94% PVC, 5% PVAc and 1% PVAlc
6. See Exhibit VII-2 for use of the index

Source: Snell, details in Appendices 3 and 4

SECTION VIII

IN-DEPTH STUDIES

SECTION VIII

IN-DEPTH STUDIES

This section discusses in detail

- The three chemical/plastics industry processes identified by the priority decision model with the highest priority ranking

  - polyurethanes
  - acrylics
  - alkyds

- Emission quantification and control techniques for some high volume resins

- General control technology and costs.

These five topics constitute the subject matter for respective chapters in this section.

VIII-A POLYURETHANES

Polyurethanes are produced by reacting a polyisocyanate with di- or polyfunctional hydroxyl compounds. Of interest to this study are those polyurethane products falling within the category of the chemical/plastics industry, SIC 2821. Polyurethane foams, both rigid and flexible, are outside the scope of this study, although the manufacture of some of the intermediates used to make foam falls within this category.

1. POLYURETHANE RESINS FALLING IN THE CATEGORY OF CHEMICAL/PLASTICS INDUSTRY ARE PRINCIPALLY PREPOLYMERS

Polyurethane polymers are used in a large number of applications including surface coatings (see Exhibit VI-K2), and intermediates in the manufacture of foams, adhesives, sealants and elastomers. These polymers are classified as either non-reactive (contain no free isocyanate groups) or reactive (contain unreacted or "blocked" isocyanate groups) which will react further with active hydrogens. This latter category included the prepolymers which are the most important products falling within the scope of this study.

2. THE PRODUCTION PROCESSES FOR MAKING THE VARIOUS PREPOLYMERS ARE SIMILAR AND ARE LOW TEMPERATURE, BATCH PROCESSES

Three types of bonding encountered in polyurethane prepolymer manufacture are (1) biuret branching, (2) allophanate branching, and (3) urethane branching. However, from the processing standpoint, these chemical classifications do not represent significantly different processes, since during manufacture all three can (and do) occur simultaneously.

Production is carried out as batch operations involving reactors ranging in size from a few hundred to a few thousand gallons. Reactions are carried out at or near atmospheric pressures under a nitrogen blanket at temperatures ranging from $70^{o}C$ - $120^{o}C$. Cycle time may vary from a few hours to about 24 hours. Exhibit VIII-A1 presents a process flow sheet characteristic of a biuret branching operation. Exhibit VIII-A2 shows a slightly different method of preparation.

EXHIBIT VIII-A1
Environmental Protection Agency
POLYURETHANE PREPOLYMER
PROCESS FLOW SHEET

Biuret Type Branching

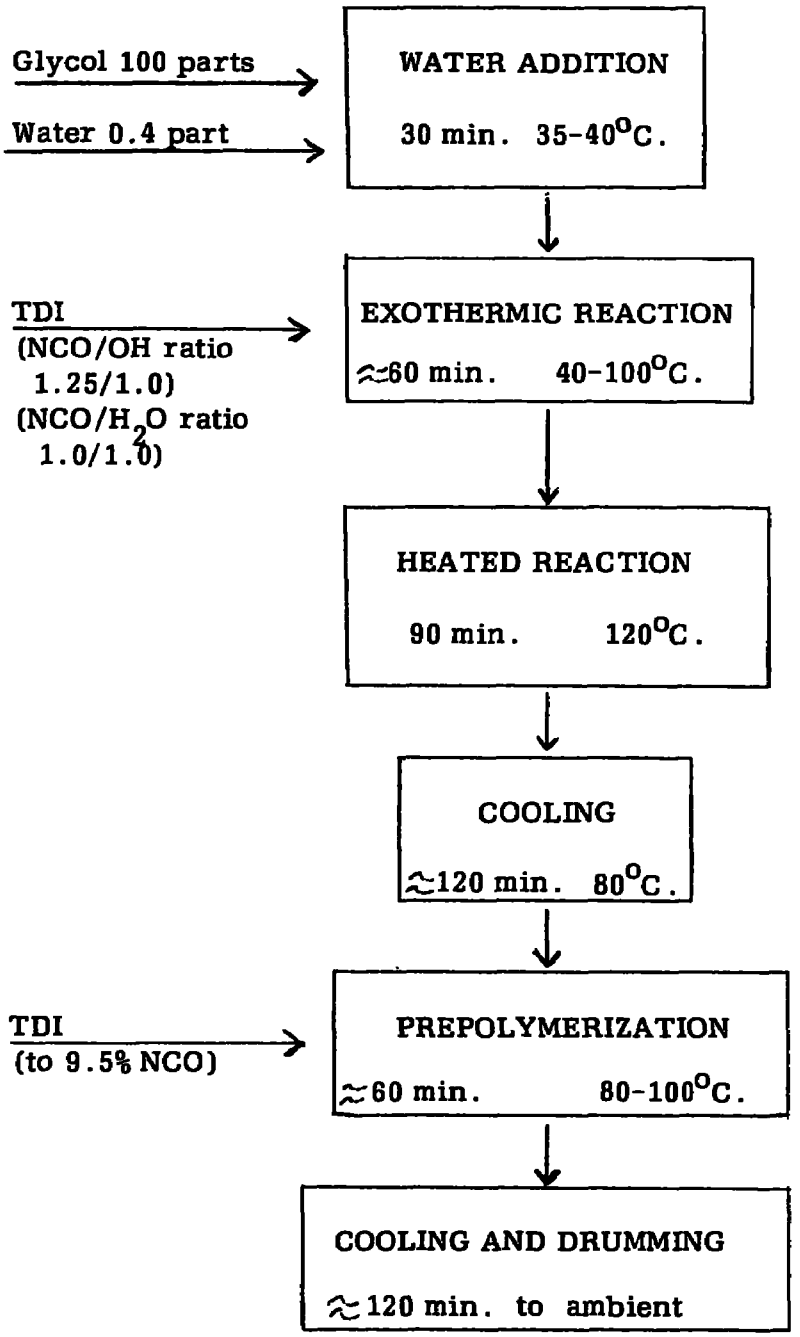

Note: N_2 blanketing in each step

Source: Snell and confidential industry sources

EXHIBIT VIII-A2

Environmental Protection Agency

POLYURETHANE PREPOLYMER
PROCESS FLOW SHEET

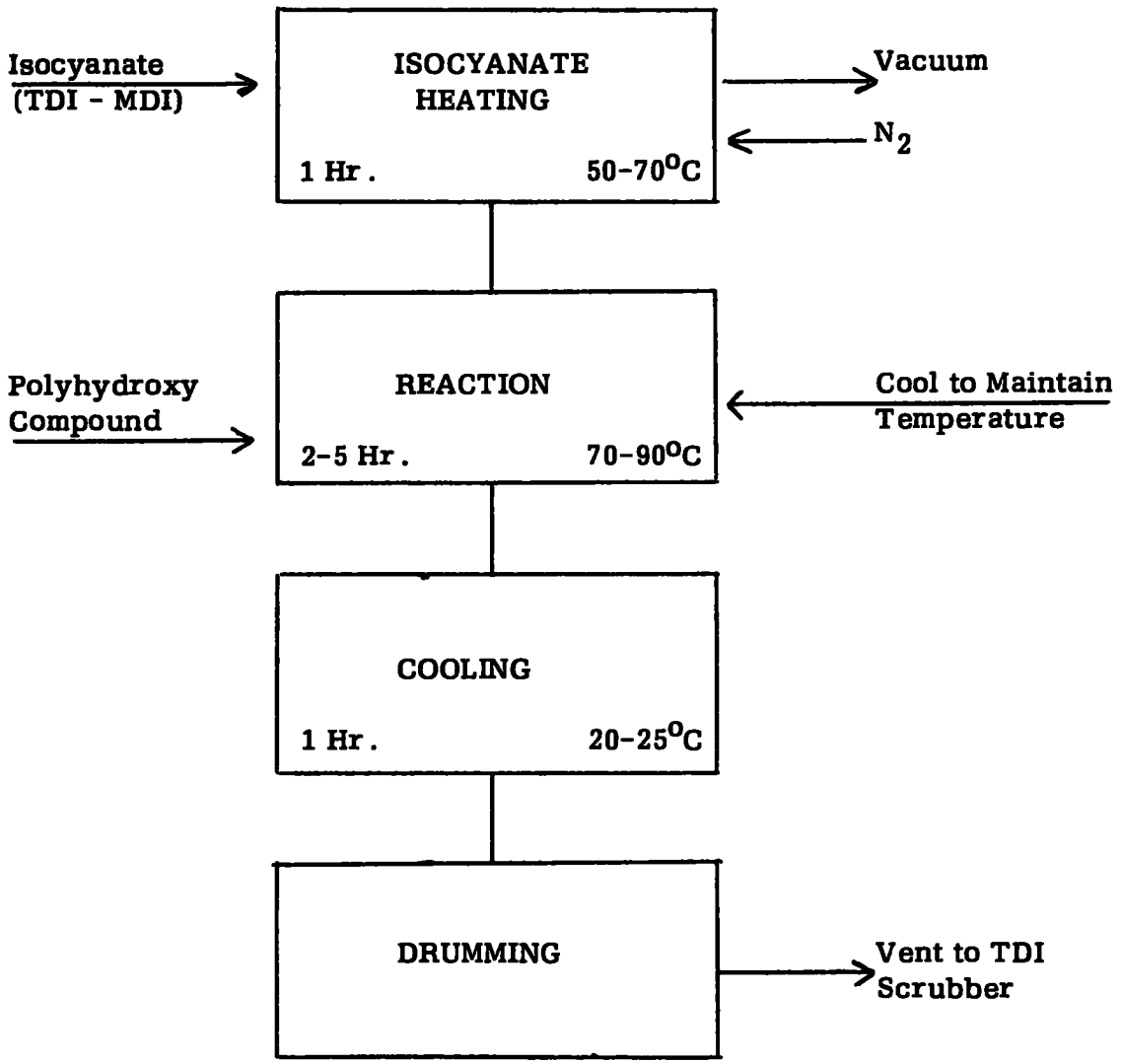

Source: Snell and confidential industry sources

An equipment diagram is presented in Exhibit VIII-A3. This equipment would not change radically from plant to plant, except that nitrogen sparging throughout the reaction may be used, particularly in older plants.

Normal operating procedure is to purge the reactor with nitrogen to remove air and moisture. The TDI or other isocyanate is added to the reactor and the mass heated to 50-70°C and the polyhydroxy compound added with the temperature maintained between 70-90°C until reaction is complete. The prepolymer is then cooled and drummed.

The bulk (90%) of the prepolymers produced is based on three isocyanates: (1) toluene diisocyanate (TDI); (2) methylene diphenylisocyanate (MDI), and; (3) polymethylene polyphenylisocyanate (PMPPI). TDI probably accounts for 70% and MDI accounts for about 25%, but its use is growing. PMPPI is reserved for special applications.

3. EMISSIONS FROM POLYURETHANE PREPOLYMER MANUFACTURING AMOUNTS TO ABOUT 3×10^{-7} POUNDS PER POUND OF PREPOLYMER PRODUCED

A theoretical emission of TDI or MDI from a prepolymer manufacturing plant having no emission control equipment can be estimated. The prime source of emission would be associated with displacement of the nitrogen in the reactor by TDI or MDI during reactor charging. Under the worst condition the isocyanate would be charged to the empty reactor at about 25°C. At this temperature TDI has a vapor pressure of 0.02 mm Hg. The equilibrium concentration of TDI in the nitrogen atmosphere would be 200 ppm. Then, for a 5,000 gal reactor, filled with 4,000 gal of TDI the vented TDI would amount to 0.01 lb or 3×10^{-7} lbs per lb of prepolymer produced.

(1) Emission Control Equipment Is Built In The Reactor Design

As shown in Exhibit VIII-A3, the reactor vent line is connected to a vacuum system equipped with a reflux condenser and a cold trap. The temperature of this cold trap is maintained at about -18°C by an ethylene glycol brine which reduces the vapor pressure of the TDI to about 0.006 mm Hg. Under this condition, no measurable emission to the atmosphere takes place. In fact, the system is designed to prevent contamination of the vacuum pump oil with TDI.

EXHIBIT VIII-A3

Environmental Protection Agency

EQUIPMENT FLOW SHEET FOR POLYURETHANE PREPOLYMER MANUFACTURE

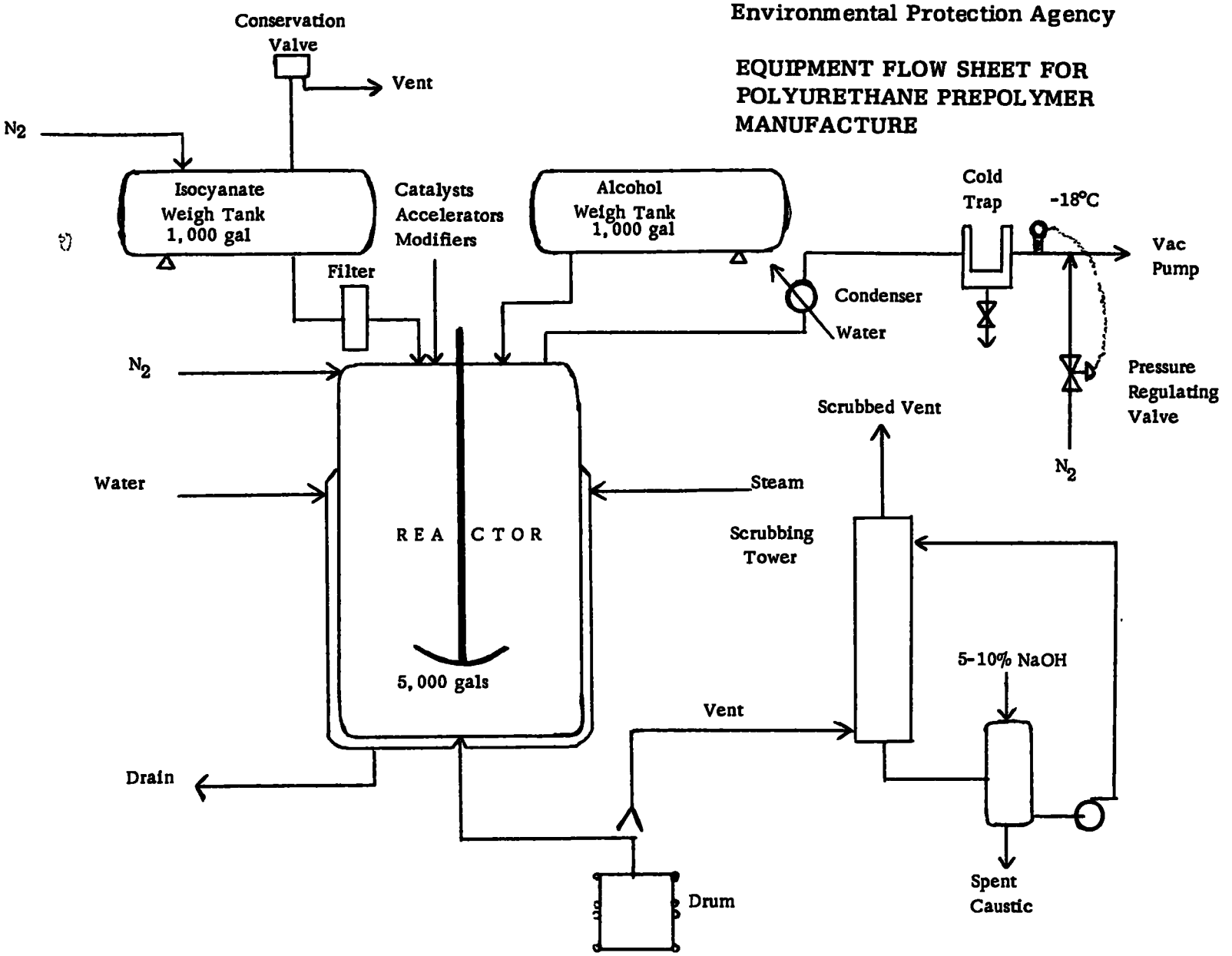

Operating Conditions

Pressure = Atmospheric to 50 mm Hg.

Temperature = Room to 90°C

Cycle Time = 4 - 24 Hours

Source: Snell and confidential industry sources

(2) Isocyanate Storage Tanks Are Equipped With Conservation Valves And Vented Through Scrubbers

TDI can be stored in tanks of up to 80,000 gal capacity. These tanks are equipped to "breathe" through the conservation valves which in turn are vented to antipollution devices.

Conservation valves are devices which minimize the "breathing" of tanks due to temperature variations. They are loaded port valves operating at positive pressures of a few torr and negative pressures of few centimeters of water.

During bulk transfers and shipment, the atmosphere of the receiving vessel is connected to that of the delivery vessel, thus avoiding discharge to the atmosphere.

Vent streams containing isocyanates are routed through caustic scrubbers having removal efficiencies of over 99.9%. The scrubbers are either packed with suitable material (generally polypropylene intalox saddles or pall rings) or venturi-type scrubbers. Both of these systems are usually operated with recycle of a weak caustic solution (5-10%). Emissions are monitored.

(3) More Elaborate Emission Control Systems Are Used Where Prepolymers Are Produced At Monomer Manufacturing Plants

Where prepolymers are made at monomer production plants, vent streams are tied into the emission control systems required for isocyanate control.

In addition, compliance with OSHA requirements and awareness of internal hazards involved insure a minimization of the occurrence and the effects of accidental (episodal) emissions. Availability of maintenance crews is also a factor in reducing the occurrence and effects of fugative emissions, from valves, pumps, seals, etc.

4. THE USE OF PREPOLYMERS OUTSIDE THE CHEMICAL/PLASTICS INDUSTRY PROPER MAY BE A MORE SIGNIFICANT SOURCE OF AIR POLLUTION

The major share of the prepolymers produced is confined to a few plants operated by large sophisticated producers of monomers. These plants are well equipped with antipollution devices.

Industry sources are unanimous at expressing concern over the potential pollution hazard in value added operations downstream. The final production of consumer goods or end-use products from polyurethanes are often carried out in comparatively small unsophisticated installations. Of particular significance is the area of "foamed-in-place" heat insulation. Direct monomer handling from drums is often involved and in spite of manufacturer's warnings and instructions, less than ideal usage conditions often prevail.

However, these industries fall outside the scope of this study but we feel that specific investigation of this area seems warranted. Polyurethane foam fabricators are listed under SIC 3079. Their number is orders of magnitude larger than those of TDI or SIC 2821 polyurethane producers.

SECTION VIII-B

ACRYLICS

1. EMULSION, SUSPENSION, SOLUTION AND BULK POLYMERIZATION SYSTEMS ARE USED COMMERCIALLY TO PREPARE ACRYLIC RESINS

(1) Emulsion Polymerization Is Widely Accepted And Is A Low Temperature Batch Operation

This is the most useful industrial method for the preparation of polymers of acrylic esters. The principal reasons are the economy and safety of water as a polymerization medium, the ease of temperature control, the speed and completeness of reaction and the convenience of application of the polymer as an aqueous dispersion. At concentrations of 30-50% the aqueous dispersions obtained by emulsion polymerization have relatively low viscosities, whereas solutions of polymers of equivalent molecular weight are often too viscous to handle.

There are two ways in which the polymerization can be conducted. Using the first method (redox), all the reactants are stirred together in the reactor and heated until polymerization is complete. This is practical as long as the heat of polymerization can be removed adequately during the reaction. In extremely exothermic polymerizations, as with the lower acrylates, adequate control of the temperature by this batch polymerization is extremely difficult and the operation is hazardous. This danger can be avoided by using the second method (reflux) in which only a small portion of the monomer is present initially in the reaction vessel, the remainder being held separately to be added gradually after polymerization has been started with the initial charge. The rate of addition is adjusted to permit the removal of the heat of polymerization.

In redox polymerization the reactor is first flushed with an inert gas such as nitrogen or carbon dioxide to remove any oxygen present, and this blanket is maintained throughout the polymerization. With the agitator rotating, the water, emulsifiers and monomer(s) are added. Then initiators (persulfates), reducing agents (bisulfite, thiosulfate, hydrosulfite, etc.) and activator (ferric ammonium sulfate) are added. After a brief induction period, the temperature will rise to 85-95°C and the reaction is 99-100% complete within 15-30 minutes.

It is desirable to remove unconverted monomers, and stripping is accomplished by post-heating at temperatures and pressures consistent with the stability and foaming tendency of the emulsion. The finished emulsion is filtered through a cheese-cloth filter bag or basket screen.

In the reflux method, part of the water containing emulsifiers and initiators (persulfates, organic hydroperoxides) is placed in the reactor. heated to a temperature approaching that desired for the reaction, and monomer emulsified in another portion of the water is fed in. Work-up of the polymer is the same as in the redox method.

The same equipment can be used for both redox and reflux polymerizations. Reactions are carried out in steam-jacketed, stainless steel or glass-lined kettles equipped with an agitator, such as a three-pronged, curved impeller rotated at a peripheral speed of 150-600 ft. per min. The kettle has dished top and bottom heads capable of withstanding 4 atm and is equipped with an emergency stack, fitted with a rupture disc, piped to a safe location. The stack leads to a stainless steel tube and shell condenser where condensate may be returned to the reactor or discharged to a small receiver. The monomer emulsion is made up in an overhead stainless steel tank equipped with a turbine-type agitator and a tankometer. The emulsion is added to the reaction kettle by gravity through a control valve.

(2) Suspension Polymerization Produces Dry Beads

In suspension polymerization, the monomer or monomer mixture is suspended in water in droplets by means of agitation. To keep the droplets from coagulating, a protective colloid such as bentonite, starch, polyvinyl alcohol, etc. is added.

The polymerization is carried out at a temperature just below the point at which refluxing would occur. For example, a suspension of acrylate monomer, buffer and benzoyl peroxide catalyst is heated at about 80°C, with vigorous agitation, until polymerization is complete. Cool the slurry and filter through a stainless steel screen or centrifuge, wash the beads with water and dry in a circulating air oven at 80-120°C or in a rotary vacuum drier.

(3) Solution Polymerization Is Especially Suited To The Preparation Of Polymers Which Are To Be Used In A Solvent

Although solutions could be made from bulk polymers, these do not dissolve easily. Direct production of this type of product by a solution polymerization process is the most convenient method.

The equipment for solution polymerization is generally similar to an emulsion plant.

Polymerization is usually carried out at or near the solvent reflux temperature. Most of the solvent is placed in the kettle and heated to the desired temperature or to reflux. Separate streams of the monomer (s) and the initiator dissolved in the reaction solvent are then added over a period of 1- 4 hours, the duration of the polymerization is usually 8 - 24 hours. Additional solvent is added, if necessary, and the product sent to storage or is drummed.

(4) In Bulk Polymerization Processes, No Solvents Are Employed And The Monomer Acts As The Solvent

Commercial bulk processes for acrylic polymers are used primarily in the production of sheets, rods and tubes. Bulk processes are also used in a small scale in the preparation of dentures and novelty items. The process is used primarily with methyl methacrylate polymerization.

Methyl methacrylate monomer catalyzed with a peroxide catalyst -- ordinarily benzoyl peroxide -- is difficult to control, particularly where large masses are concerned. The difficulties involve removal of dissolved gases, adjustment for volume shrinkage, and adequate control of the highly exothermic polymerization reaction in the early stages especially after the material has reached the gel stage. These difficulties can be alleviated by using a casting syrup or partially polymerized product rather than the monomer.

The casting syrup is usually prepared by heating the monomer with 0.02-0.1% benzoyl peroxide at 70-80°C with constant agitation until the consistency while still hot approximates that of glycerine, but when cooled to room temperature approximates that of molasses. The solids (polymer) content of this syrup is about 10%. It may be stored at 5°C or below.

The syrup is poured into the mold and cured at either atmospheric pressure or up to 10 atm and temperature cycles of 40-110°C or 70-135°C respectively for 45 minutes for each 1/2 inch of casting thickness.

2. MONOMERS ARE THE PRINCIPLE SPECIES EMITTED

All commercially available monomers have significant vapor pressures. Since the main polymerization processes are water/monomer or monomer only systems, their concentrations in venting gases would be significant.

An indication of the magnitude of the potential emissions due to handling of monomers alone, i.e., displacement of inert gas blankets in storage and reactor charging can be calculated as is summarized in the following table. The gas phase is assumed to be air and equivalent concentrations would be encountered with nitrogen at atmospheric pressure.

Monomer	Molecular Weight	Vapor Pressure (mmHg@ 25°C)	Equilibrium Concentration in Air (% by wt)	Lb. Monomer Emitted per Lb. Monomer Handled
Ethyl Acrylate	100	40	16.2	2.1×10^{-4}
Acrylic Acid	72	4.0	1.3	0.17×10^{-4}
Butyl Acrylate	128	4.5	2.6	0.34×10^{-4}
Cellosolve Acrylate	144	0.8	0.52	0.07×10^{-4}
2-Ethylhexyl Acrylate	185	0.2	0.17	0.02×10^{-4}
Methyl Acrylate	86	70	20.8	2.7×10^{-4}
Methyl Methacrylate	100	40	16.2	2.1×10^{-4}

Source: Snell estimates based on physical data provided in a confidential industry submission.

(1) Except For Storage Venting, Emission Sources Are Generally In-Plant

The table below summarizes significant emission sources as a function of the polymerization processes.

Emission Sources In Acrylic Polymerization

Emission Sources	Polymerization Process			
	Bulk	Solution	Suspension	Emulsion
Monomer Handling	X	X	X	X
Solvent Handling		X		
Reactor	X	X	X	X
Filtration			X	
Drying			X	
Product Handling	X	X	X	X
Fugitive and Accidental	X	X	X	X

With comparatively high vapor pressures of the monomers, there is considerable opportunity for escape to the atmosphere. One industry source[7] indicates that in a typical methyl methacrylate plant, concentrations as high as 2.4 ppm have been encountered. The concentration decreased as the distance from the plant increased, but could still be as high as 0.1 ppm 70 ft. outside the building.

Three companies have submitted confidential data quantifying emissions from some of their processes. Their data were obtained principally by estimation (with an occasional measurement being made) on a typical yearly production with a typical product mix and process. The information is not sufficient to accurately define the total emission, but does define the order of magnitude.

The manufacturing processes and emissions described below are from well operated and maintained plants. It is expected that smaller plants would have emissions at least as high, if not higher than these.

(2) Emission From Solution Polymerization Processes Include Both Monomer And Solvents, According To A Case Study

This solution process is used in the manufacture of a acrylic oil additive. The plant is about 15 years old and has a capacity of about 30 million lbs per year. It is a batch polymerization process in which monomers are polymerized in a hydrocarbon solvent using a peroxide catalyst and mercaptan type chain transfer agents. At completion of polymerization, the solvent is removed, and recycled, the resin is blended, sent to storage and, when ready for shipment, is filtered.

Emissions are expressed in pounds of raw material per pound of product produced based on a typical yearly production with a typical product mix. The products are solutions of acrylic polymer in mineral oil. Emissions have been estimated at each point source. The estimates are not sufficient to accurately define the total emissions but do define the order of magnitude. Manufacturing unit emissions under normal operating conditions summed are:

Source	Emission Factor (lbs/lb product)
Total non-fugitive emissions	
acrylic esters	2.2×10^{-4}
solvent	9×10^{-4}
Chemicals receiving and storage	
heavy acrylic esters	4×10^{-5}
light acrylic esters	2×10^{-4}
solvent	1.4×10^{-4}
Polymerization	
heavy acrylic esters	1.3×10^{-5}
light acrylic esters	not available
solvent	8×10^{-6}
Polymer separation	
solvent	7.5×10^{-4}
Fugitive emissions	not available

Source: Confidential industry submission

Primary odor and emission control techniques involve good housekeeping practices, standard operating procedures and maintenance practices. All process chemical storage tanks are diked and dikes contain locked valves for spill protection and control. Spills average about one every five years.

(3) <u>According To A Case Study, Emissions From An Emulsion Process Are Primarily Monomer, Of The Order Of 1×10^{-3} Lbs Acrylates/Lb Product And The Same Factor For Vinyl Acetate</u>

This emulsion process is a batch process. The plant is about 3 years old with a capacity of about 50 million lbs/yr. The process consists of emulsifying a vinyl acetate/acrylate ester mix in water and polymerizing with persulfate and peroxide catalysts. Other ingredients include emulsifying agents, protective colloids and buffer salts.

The emissions have been estimated based on raw material balances across the entire system. Estimated emissions are:

Acrylate type monomers:	1×10^{-3} lbs/lb of product
Vinyl acetate:	1×10^{-3} lbs/lb of product

The estimates include fugitive emissions but their magnitude is not known. Spills do occur and are not included in these estimates.

Primary odor and emission control techniques involve good housekeeping practices, standard operating procedures and maintenance practices. Devices planned for installation include collection systems for emissions from storage and processing areas connected to a scrubbing system based on mixtures of triethylenetetramine in ethylene glycol/water solvent. Also planned are collection systems for transfer areas where spills have occurred in the past.

Another manufacturer using the emulsion process indicates emissions of acrylate esters from storage areas are controlled by closed circuit loading and conservation vents. Reactor area emissions are controlled by a proprietary scrubbing system designed to treat 20 SCFM gas flow rate containing 20 lbs/hr monomer to a level of 0.02 lbs/hr monomer. The scrubbed gas is discharged high enough to prevent ground level odor.

(4) According To A Case Study, Emissions From A Suspension Process Are Principally Monomer, Of The Order Of 5×10^{-4} Lbs/Lb Product

This process in a 25 year old plant consists mainly of suspending various methacrylate and acrylate monomers in water and polymerizing by the aid of azo and peroxide initiators. The complete process is not well defined but probably consists of filtering the suspended polymer, and later compounding.

Emissions for the point sources have been obtained by calculation of storage tank losses based on vapor pressures, by calculations based on a few atmospheric samples throughout the process, and on estimates and observations in the cases of intermittent leaks of spills. The estimated emissions are:

Source	Emission Factor (Lbs/lb of product)
Storage:	
Monomers:	1.46×10^{-4}
Other:	9.30×10^{-7}
Polymerization:	
Monomer:	1.73×10^{-4}
Other:	6.09×10^{-6}
Compounding:	
Monomer:	9.22×10^{-5}
Other:	4.98×10^{-5}
Waste disposal:	
Monomer:	1.63×10^{-5}
Other:	5.60×10^{-6}

Source: Confidential industry submission

Emission control methods include: closed liquid systems and spill control; condensation of vents, and; preventative maintenance.

3. EFFICIENT EMISSION CONTROL METHODS ARE AVAILABLE BUT ODORS WILL PROBABLY STILL BE NOTICEABLE BECAUSE OF THE ODOROUS NATURE OF THE MONOMERS EVEN AT EXTREMELY LOW CONCENTRATIONS

The emission control methods used by the larger, more sophisticated producers of acrylic resins, appear to be relatively efficient. The use of closed liquid systems, conservation vents and nonregenerative water scrubbers removes over 99% of the vapors from these processes.

The ultimate goal of most producers is to eliminate odors. This may not be possible because of the extremely low odor threshold value of these monomers. For example, ethyl acrylate is noticeable at a concentration of 0.00024 ppm.[46] At this low concentration, combustive materials in an air stream does not provide enough BTU's to maintain the temperature necessary for catalytic oxidation.

One producer dilutes its plant air exhaust stream and discharges it high enough to prevent ground odor.

SECTION VIII-C

ALKYDS

Alkyds are polymers derived by condensing fatty acids or oils, glycols and polybasic acids. The recipes for these resins vary tremendously, but can be very broadly classified as Short Oil (containing 33 - 45% oil and 35% phthalic anhydride), Medium Oil (containing 46 - 55% oil and 30 - 35% phthalic anhydride) and Long Oil (containing 56 - 70% oil and 20 - 30% phthalic anhydride).

Alkyds are produced by either the fusion or solvent process. In the fusion process the water formed during condensation is removed by a continuous purge of mist gas, while the solvent process uses a solvent, such as xylene, to remove the water. The latter usually results in an alkyd having a lighter color.

There are numerous literature references regarding alkyd formulations and manufacturing procedures, but no data on emissions from the process(s) have been found. Recently, however, emissions from a model paint plant have been described[43] and we have quantified the emissions from a typical alkyd plant which would be part of this paint plant.

1. MANUFACTURE IS GENERALLY A HIGH TEMPERATURE BATCH OPERATION

(1) Most Modern Alkyd Resin Plants Have Similar Layouts And Equipment

Alkyd processing plants consist of four major operating areas: (1) raw material and solvent storage; (2) polymerization; (3) alkyd work-up including thinning and final product polishing, and (4) finished product storage and/or packaging.

Raw materials can be stored either inside or outside the plant. Liquids, such as oils, alcohols, solvents, etc. are usually stored in tanks. Solids such as phthalic anhydride, pentaerythritol, etc. are stored in bags usually weighing 50 lbs each. Large alkyd plants may receive molten phthalic anhydride in bulk shipments in which case the product is stored in heated tanks.

Polymerization is carried out in jacketed resin kettles (reactors) ranging in size from 500 gallons to 6,000 gallons capacity. These are generally constructed from stainless steel alloy types 304,316, or 347 and equipped with an agitator capable of rotating at peripheral speeds of 600-800 ft. per min. Additional agitation is provided by means of an inert gas sparge at rates of 0.005-0.04 CFM per gallon of charge. The reactors can be used as either a fusion or solvent reactor. If used as a solvent reactor, it is usually equipped with condensers and a decanter-receiver. If used as a fusion reactor, the condenser and decanter-receiver are omitted or shut off. Reaction temperatures may vary from 210 - 250°C. An equipment flow sheet for a typical alkyd manufacturing process is presented in Exhibit VIII-C1.

All alkyds (with the exception of those used in making molding compounds) are diluted or thinned with solvents usually xylene or mineral spirits. When the desired degree of polymerization has been reached, the alkyds from the reactor are dropped into a thinning tank containing the desired solvent. The tank is usually twice the capacity of the reactor and is equipped with a condenser and stirrer. Cooling is accomplished by circulating cold Dowtherm or water through the jacket.

The diluted alkyd is filtered hot, usually through a plate and frame filter and sent to storage or directly to drumming facilities.

2. THE MODEL PLANT DESCRIBED HAS A CAPACITY OF 2.2 TO 2.4 MILLION POUNDS PER YEAR AND EMPLOYS BOTH SOLVENT AND FUSION PROCESS EQUIPMENT

The model plant operates 250 days per year on a two-shift basis. This quantity of alkyd resin solids produces about 722,000 gallons of alkyd base paints.

About 50,000 gallons of tankage will be required for solvents and other raw material storage. A minimum of one month's supply is necessary and it is assumed that the average alkyd prepared contains 53% oil and the plant operates on a two-shift operation (the efficiency of the second shift being 90%). All alkyds are to be diluted to 50% non-volatile solids (NVS) with xylene. Separate storage tanks are available for xylene, oils, glycerine and waste solvent and have the following capacities:

EXHIBIT VIII-C1

Environmental Protection Agency

ALKYD PROCESSING (34)

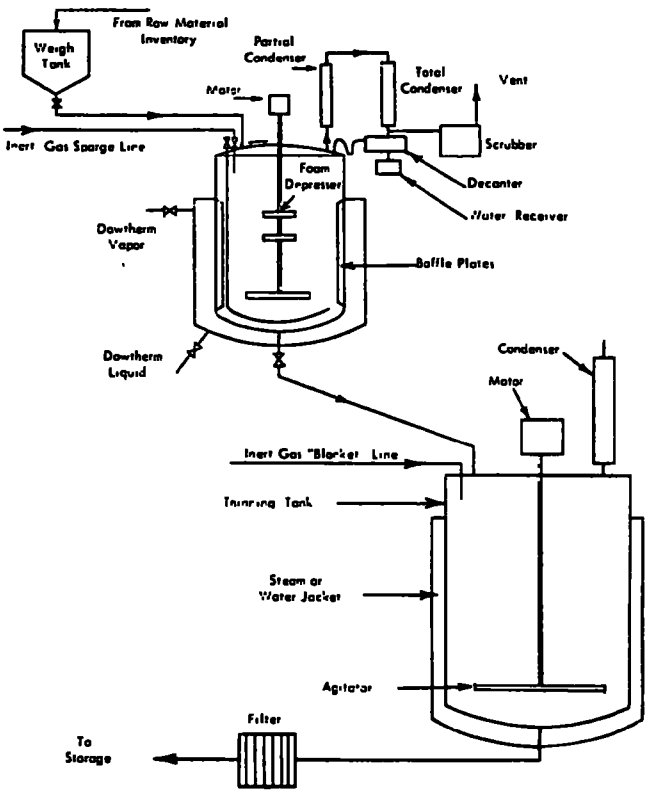

Fig. 1. Schematic diagram of typical alkyd processing plant

Volume (gal)	Contents
25,000	Xylene
25,000	Oil
7,500	Glycerine
2,000	Waste Solvent

Phthalic anhydride is stored in 50 lb bags, although larger alkyd producers receive molten phthalic anhydride and this would require additional tankage.

The plant is equipped with two reactors. A small reactor of 500 gallon capacity will be used as a fusion reactor and can produce about 2,375 lbs of resin solids per batch. A larger reactor having a capacity of 1,500 gallons can be used as both a fusion and solvent reactor and can produce about 7,125 lbs of resin solids per batch. Production consists of an average of one batch in each reactor per 24 hour day.

Two thinning tanks are required, one for each reactor. They should have double the capacity of the respective reactors with which they are associated. Therefore, tanks should have capacities of 1,000 gallons and 3,000 gallons.

It is expected that 35,000-40,000 gallons of finished alkyd product storage is adequate. Many different alkyd formulations are made depending upon end uses and specifications and separate storage tanks are therefore required. Individual tanks ranging from 1,000 gallons to 10,000 gallons should suffice.

(1) Production Is Almost Equally Divided Between Long Oil And Short Oil Alkyds

Probably more than 95% of alkyd production is used for making trade or industrial coatings and averages about 53% oil. Two formulations were used in calculating emissions from an alkyd plant. A short oil alkyd and long oil alkyd typify alkyd production in fusion and solvent processes respectively. Typical formulations are shown below.

Short Oil (40% oil)	Long Oil (60% oil)
1,000 lbs oil	4,500 lbs oil
600 lbs glycerine	1,000 lbs glycerine
900 lbs phthalic anhydride	2,000 lbs phthalic anhydride

(2) The Fusion Process Is Usually Carried Out At Temperatures Of 400-450°F

The reactor (500 gallons) is charged with the oil and glycerine and blanketed with inert gas. Agitation is started and heat is applied (435-450°F) until alcoholysis is complete. This takes about 3 hrs. Phthalic anhydride is added through the manhole and heating is continued for about five more hours or until the desired viscosity and acid number is reached. Gas sparging exhaust rates are about 2 CFM during alcoholysis, then at a decreasing rate of 0.04 CFM per gallon of charge during the first two hours of esterification, 0.02 CFM during the third hour, and 0.01 CFM for the remainder of the cook.

(3) The Solvent Process Is Carried Out Under Xylene Reflux Conditions

Total reaction time is approximately 12 hrs. for a long oil alkyd charge in the 1,500 gallon reactor. The normal procedure is to charge the reactor with the oil, blanket with an inert gas, heat to 450-500°F, add glycerine and continue heating at this temperature for 4.5-5 hrs. Cool to 390°F, add phthalic anhydride, hold at 450°F until esterification is complete and the desired viscosity and acid number is reached. The condenser vent temperature is assumed to be about 100°F.

3. TOTAL EMISSIONS FROM THE MODEL PLANT AMOUNT TO 0.008 POUNDS PER POUND OF ALKYD SOLIDS PRODUCED

Total emissions for the model plant are summarized in Exhibit VIII-C2. Over 98% of the emissions arise from reactor venting and fugitive sources such as filter press, agitator seals and spillage.

The emissions estimated for this model plant are in agreement with actual emissions measured (based on 15 resin cooks) of 0.0001 to 0.007 lbs/lb of alkyd produced.[44] The major component of the emissions was xylene.

On a pound for pound basis, there appears to be little difference in emissions from the fusion or solvent process.

EXHIBIT VIII-C2

Environmental Protection Agency

SUMMARY OF EMISSIONS FROM AN ALKYD PLANT PRODUCING 2.2 - 2.4 MILLION POUNDS OF ALKYD SOLIDS [44]

% Contribution	Source of Emission	Principle Emission	Pounds Emitted Per Year Fusion Cook	Solvent Cook	Total
0.4	Raw material storage	Xylene	20	60	80
9.4	Reactor	Mixed organics	288		288
		Xylene		1,400	1,400
1.2	Thinning	Xylene	53	160	213
0.2	Finished Resin Storage	Xylene	12	33	45
88.8	Fugitive	Xylene	4,000	12,000	16,000
100.0	Total		4,373	13,653	18,026
	Pounds Emissions/Pound Alkyd		.0074	.0077	.0076

4. MINIMAL EMISSION CONTROL IS PRACTICED IN THIS INDUSTRY

Solvent tanks are normally vented to the atmosphere.

When phthalic anhydride is received and stored in the molten state, it is usually kept under a blanket of inert gas. Conservation vents set at about 2-3 torr of pressure are usually used.

Many small producing plants heat reactors with gas burners. This leads to local hot spots which produces acrolein, a very odorous product. When tall oil is used, mercaptans and other odorous sulfur compounds are often formed.

In addition, plants using solid phthalic anhydride usually add this product to the reactor through a manhole. During this addition, gas sparging is continued resulting in particulate emissions through the manhole and vents, as well as aerosol emissions containing water, phthalic anhydride, phthalic acid, and esters. The high sparging rate corresponds to a stream of about 60 SCFM for a typical 1,500 gallon kettle.

In the solvent process, a partial reflux condenser is used to return most of the vapors to reactor. This is followed by the so-called total condenser which condenses the azeotrope and the continuous decanter separates the water from the solvent. Finally, there is a circulating scrubber on the vent line. There is no concensus as to the efficiency of this scrubber, but it is known that it has little or no effect on gaseous products.

5. FURTHER TREATMENT OF ALKYD PRODUCTION VENT STREAMS MAY BE REQUIRED

In view of the poor performance of scrubbing in the control of emissions from alkyd manufacture, some other method may be required to control, in particular, the odors emitted.

Two methods present themselves - carbon adsorption and combustion.

(1) Carbon Adsorption Would Probably Not Be Beneficial For Control Of Alkyd Emissions

A problem associated with the emissions from sparged reactors used in alkyd production is that highly turbulent conditions in the reactor cause the formation of all sorts of aerosols. Deposition on adsorbent carbon would then very severly limit the usefulness and life cycle of the adsorbent. If used downstream from an efficient filter or precipitator, an activated carbon unit could control solvents and odors efficiently. The economy of this combined system is, however, questionable compared to that of combustion in terms of both the original cost and the operating cost.

(2) Combustion Of The Vent Gases Would Be Beneficial But Additional Fuel Costs Would Be Encountered

Combustion at 1200°F with a residence time of 2 - 3 seconds in the fire zone destroys practically all organic species. Where a stream containing organic materials is too dilute to sustain its own combustion, as would be the case for vent gases from alkyd production, a gross approximation of heating costs is possible. The energy necessary to raise a pound of air to 1200°F is about 250-270 BTUs per lb. Thus a stream of 60 CFM of inert gas would require a gas air mixture with a net BTU content of about 1250 BTU s per minute. Due to variations in the sparging rates, a total of about 500,000 BTUs per day would be required. This would represent about $3 - $5 per day which is quite acceptable. A more complete analysis of the incineration is given in the review of general control methods.

SECTION VIII-D

EMISSION QUANTIFICATION AND CONTROL TECHNIQUES FOR SOME HIGH VOLUME PLASTICS

Literature sources[3,45,47] have provided data related to quantitative emission factors and emission control methods for several large volume resin materials. The emission factors, however, are based on material balances rather than quantitative analysis of vent or exhaust streams. A discussion of some emission control devices used and emission factors calculated for some major chemical/plastic processes follows.

Exhibit VIII-D1 summarizes the emission control devices reportedly used by polymer manufacturers. Exhibit VIII-D2 summarizes the emissions from some resin plants.

1. EMISSION CONTROL DEVICES USED IN PVC PRODUCTION INCLUDE VENT CONDENSERS, CYCLONES AND BAG FILTERS

Vent condensers condense and retain most of the vinyl monomer which would otherwise reach the atmosphere. With these devices, hydrocarbon emissions from the reactor area and monomer recovery units would amount to 0.01 to 0.02 pounds per pound of polymer produced.

Particulate control is most important during the manufacture of PVC. Processes which generate dusts include the dryer and materials handling (including pneumatic conveyors and loading equipment). Cyclones are usually used and have efficiencies of 99.9%. Bag filters will collect 100% of the fines above approximately 50 micron particle size and can be used alone or as backup for cyclones. Particulate emissions are in the order of 0.003 pounds per pound of polymer produced.

Cost of cyclones and bag filters is mainly dependent upon the air flow volume. Installed costs can vary from about $20,000 to over $120,000 rated at 1,000 - 67,000 SCFM respectively. Operating costs also range from 0.0026 - 0.0157 cents per pound of PVC production. In some instances there is a net credit for recycling PVC recovered amounting to almost 0.05 cents per pound of PVC production.

Vent condensers recovering 9 - 12 pounds of monomer per hour cost about $4,000 - $6,000, respectively. These show operating costs of 0.023 cents per pound credit to 0.003 cents per pound cost, respectively.

EXHIBIT VIII-D1
Environmental Protection Agency

EMISSION CONTROLS REPORTEDLY USED BY POLYMER MANUFACTURERS[3,45,47]

Polymer	Cyclone	Bag Filter	Flare	Incineration	Compression/ Cooling	Scrubber-Water	Scrubber-Oil	Stream-Ejector/ Condenser	Screens	Scrubber - Non-Regenerative
Polyvinyl Chloride (Suspension)										
Vinyl Chloride Vent					x					
Dryer Collector	x	x								
Stripping Vent					x					
Dry Storage Bins		x								
Polyamides										
Nylon 6										
Spinnerette Cooler Vent						x				
Depolymerizer Vent						x				
Reactor Vent					x					
Melt Polymerizer					x					
Pelletizer Vent						x				
Recovery Column Vent								x		
Nylon 66										
Finisher Exhaust Vent					x					
Polypropylene										
Reactor Vent			x		x					
Reclaim/Purification Vent			x	x	x					
Drying, Storage & Packaging	x	x							x	
Polystyrene										
Dryer Exhaust Vents	x	x								
Extruder Exhausts	x	x								
Pneumatic Conveyor Exhausts	x	x								
SBR Rubber (Emulsion Polymerization)										
Carbon Black Removal		x				x				
Monomer Removal			x							
Butadiene Removal							x			
Talc Removal	x									
Acrylics										
Process Area					x					x
Storage Area										x
Compounding					x					x
Polyurethanes										
Polymerization Vent					x					
Transfer Vent (Drumming)						x		x		
Alkyds										
Storage					x					
Polymerization					x					

Fugitive emissions from pumps, compressors, storage and normal operations amount to about 0.002 pounds of hydrocarbons per pound of PVC produced.

2. POLYPROPYLENE PLANT EMISSION CONTROL DEVICES WHICH MAY BE USED INCLUDE CYCLONES AND/OR BAG FILTERS, WATER SCRUBBERS, FLARES, INCINERATORS AND VENT CONDENSERS

We judge that particulate removal costs would be of the same order of magnitude as described above. However, reported emissions are considerably lower and are about 0.001 pounds per pound of PP produced.

Installed costs for flare systems can range from $37,000 to over $300,000 with operating costs ranging from 0.014 to 0.039 cents per pound of PP production. Hydrocarbon emissions (including fugitive emissions) would be in the order of 0.016 pounds per pound of PP produced.

3. VENT CONDENSERS AND CYCLONES AND/OR BAG FILTERS ARE BEING USED BY SOME POLYSTYRENE PRODUCERS

These devices are used primarily for product recovery rather than control devices.

Hydrocarbon emissions have been estimated at 0.006 pounds per pound of polystyrene produced with over 50% of this appearing at the reactor vent.

Particulate emissions amount to about 0.0001 pounds per pound of PS produced.

EXHIBIT VIII-D2

Environmental Protection Agency

EMISSION FACTORS FOR SOME LARGE VOLUME RESINS (Lbs/lb product)

Plastic	Particulates/Aerosols	Hydrocarbon
Polyvinyl Chloride	0.0002 - 0.004 (45)	0.001 - 0.02 (45)
	0.00034 (3)	0.00021 (3)
Nylons	0.0003 - 0.005 (45)	0.001 - 0.02 (45)
Polypropylene	0.00001 - 0.0002 (45)	0.0002 - 0.04 (45)
Polystyrene	0.00001 - 0.0002 (45)	0.0002 - 0.04 (45)
	-	0.00029 (3)
HD Polyethylene	-	0.085 (3)
LD Polyethylene	0.0013 (3)	0.044 (3)

SECTION VIII-E

ECONOMICS OF TYPICAL EMISSION CONTROL METHODS

1. IN THE CHEMICAL/PLASTICS INDUSTRY, A GOOD DEAL OF CONTROL EQUIPMENT IS CONTRIBUTING TO PROFITS

There are two fundamental types of control equipment

- one type separates material(s) from a waste stream
- one type destroys undesirable materials in a waste stream

Dust collectors and condensers belong in the first category. Flares and scrubbers belong in the second. However, the heat generated by the flares can sometimes be usefully recovered.

Adsorbing devices, which are also useful can belong to either category depending upon the disposition of the spent adsorbent.

The table below presents a cursory analysis of the equipment reported as "Emission Control Equipment" in various monomer-polymer production plants[45].

Industry	Percent of "Profitable" Emission Control Equipment
Styrene-Butadiene Rubber	50%
Polypropylene	20
Polystyrene	100
Polyvinyl Chloride	50
Nylon 6	40
Vinyl Chloride Monomer	30
Isocyanates	10

Source: Snell estimates based on data in Reference 45.

The figures refer to the gross number of pieces of equipment reported, regardless of type, capital or operating costs.

It can be seen that a large proportion of such equipment falls into the category of "profitable" equipment, showing a negative operating cost when the value of the product recovered is taken into consideration. Examples are cyclones and bag dust collectors.

A relatively low proportion of "profitable" equipment is encountered in isocyanate manufacture. In this respect it should be noted that:

- the monomers of the isocyanate family are highly noxious
- there is a considerable amount of phosgene in the atmospheric waste streams and that a limit of 200 ppm has been in force for the emission of this chemical for a number of years.

2. AN ECONOMIC OVERVIEW WAS DEVELOPED FOR FIVE EMISSION CONTROL METHODS APPLICABLE TO THE CHEMICAL/PLASTICS INDUSTRY

Exhibit VIII-E1 shows some of the capital costs and other characteristics of typical pieces of equipment actually in use in the polymer industry.

(1) The Installed Cost (C) Of A Bag Collector Is $C \simeq 3.5\,V^{.9}$, Where V = Thousand CFMs

In a recent survey, unrelated to this project, we have found that

- there is a keen competition between manufacturers of essentially similar equipment, leading to a more or less uniform pricing policy.
- most of the installations sold until recently, were based on value of recovered material.

EXHIBIT VIII-E1 (1)
EPA
REVIEW OF SPECIFIC PIECES OF EQUIPMENT
IN ACTUAL USE

	Plant	Capacity (tons/yr)	Flow Of Pollutants (lbs/hr)	Capital Cost (1973 $)	Efficiency (%)	Rate	Remarks
Polyvinyl Chloride (Suspension)							
Vent Condenser	A	50,000	12	7,000	83	12 lb/hr	
Dryer Bag Filter			135	125,000	99.8	45,000 SCFM	Mikro-Pulsaire
Silo Bag Filter			4	65,000	99.9+	4,500 SCFM	Flex-Kleen Corp.
Bagger Bag Filter			1	31,000	99.9+	1,500 SCFM	Mikro-Pulsaire
Bulk Loading Bag Filter			3	12,500	99.9+	3,000 SCFM	Mikro-Pulsaire
Dryer Bag Filter	B	30,000	2	57,000	99+	25,000 CFM	U.O.P. Dust Collector
"Day Storage" Bag Filter			0.03	9,000	99.9+	3,750 CFM	Flex-Kleen Corp.
Bulk Storage Bag Filter			0.02	6,000	99.9+	1,600 CFM	Flex-Kleen Corp.
Bagger Bag Filter			0.02	5,000	99.9+	1,100 CFM	Flex-Kleen Corp.
Vent Condenser	C	45,000	9	4,500	96.3	9 lb/hr	Process Engineering and Machine Co.
Various Bag Filters				68,000	99.9+	27,000 CFM	Flex-Kleen Corp.
				15,000	99.9+	5,000 CFM	Flex-Kleen Corp.
				28.000	99.9+	9,800 CFM	Fuller Co.
				62,000	99.9+	38,350 CFM	Pulverizing Machinery
				15,000	99.9	5,000 CFM	Pulverizing Machinery
				5,000	99.9+	1,400 CFM	Fuller Co.
Vent Condenser	D	70,000	trace	205,000	99+	trace	
Vent Condenser*			trace	62,000	99+	trace	
Dryer Cyclone			10	110,000	99.9+	27,000 CFM	
Dryer Bag Filter			8	110,000	99.9+	20,000 CFM	Dustex
Dryer Bag Filter*			9	160,000	99.6	67,000 CFM	

* Emulsion Process

EXHIBIT VIII-E1 (2)

	Plant	Capacity (tons/yr)	Flow Of Pollutants (lbs/hr)	Capital Cost (1973 $)	Efficiency (%)	Rate
Polyamides						
Nylon 6						
Reactor Vent Condenser	A	119,000	~700 SCFM	85,000	n.a.	
Recovery Vent Condenser			n.a.	2,000	near 100	
Pelletizer Vent Scrubber			n.a.	45,000	n.a.	
Depolymerizer Vent Scrubber				58,000		
Nylon 66						
Finisher Off-Gas Scrubber	A	62,500	40	115,000	99.7	
Polypropylene						
Reclaim Vent Condenser	A	60,000	344	67,000	n.a.	120 SCFM
Recovery Vent Condenser	B	150,000	729	12,000		
Various Bag Filters			n.a.	230,000		
			n.a.	120,000	n.a.	
Flare Pit	C	62,500	variable	85,000	near 100	
Bag Filter				89,000		143 lb/hr
Process Vapor Condenser & K.O. Drum				24,000		1,585 lb/hr
Process Vapor Condenser				5,000		8 lb/hr
Flare System	D	75,000	3,336	340,000	near 100	

	Plant	Capacity (tons/yr)	Flow Of Pollutants (lbs/hr)	Capital Cost (1973 $)	Efficiency (%)	Rate
Process Vapors Scrubber	E	50,000	25.3	7,000	98.5	68 lb/hr
Process Fluids Incinerator			23	58,000	99.5+	variable
Flare System			40[1]	52,000	99.5+	n.a.
Flare System	F	140,000	5,996	96,000	99.5+	
Handling and Storage			4 total			
Cyclone			variable	9,000	n.a.	10,000 SCFM
Screens			variable	7,000		3,000 SCFM
Screens			variable	33,000	n.a.	22,000 SCFM
Bag Filter			180	140,000	99.3	16,000 SCFM
SBR Rubber (Emulsion Polymerization)						
Carbon Black Water Scrubber	A	219,000	1	19,000		
Flare				18,000		
Butadiene Oil Scrubber	B	112,000	62	70,000	96.5	75 SCFM
Carbon Black Spray Water Scrubber	C	175,000	715	17,000		360 SCFM
Flare				19,000		500 SCFM
Butadiene Oil Scrubber	D	342,000	~10	34,000	98	8 SCFM
Carbon Black Water Scrubber			~600	3,600	95	90 SCFM

[1] Design Rating 20,000 lbs/hr

Source: Snell estimates based on data from Reference 45

A plot of the capital cost versus equipment capacity in terms of CFM handled is presented in Exhibit VIII-E2. The outlying points can be sometimes attributed to the high temperature of the stream, requiring highly sophisticated, and therefore expensive fabric (e.g. Du Pont "Nomex"). The plot indicates that the 1973 installed cost of a "normal" bag dust collector, with ancillary equipment, is given by the formula

$$C = 3450\ V^{.92}$$

where C is the cost in $ and V the volume handled in 1000 CFM.

(2) <u>The Annual Continuous Operating Costs Of Bag Collectors Can Be Estimated At $0.30 - $0.50 Per CFM</u>

Assuming that on the average bag dust collectors operate at a differential pressure of a few torr, the power requirements can be estimated at 0.25 HP of air HP per 1000 cft. handled assuming a 60% efficiency.

Thus, the energy requirement for a 50,000 CFM dust collector is of the order of 100,000 KWH per year for a continuous operation. With electricity at $0.02/KWH the cost of energy alone can be about $2,000.

Assuming an installed cost of $125,000, the annual operating cost including 10 year depreciation can be between $15,000 - $17,000 .

Industry figures indicate: $23,000/year for a 45,000 CFM bag collector and $27,000/year for a 67,000 CFM bag filter. But at the same time, figures of $400/year have been reported for a 25,000 CFM unit and $12,000/year for a 1,500 CFM unit.

Thus, as a first approximation, the annual continuous operating costs for bag dust collectors could be calculated at about $0.30 to $0.50 per CFM.

(3) <u>Where The Monomers Are Highly Volatile Compression And/Or Refrigerated Condensation May Be Economical</u>

There are two cases to be considered. In the first case, the stream is essentially unreacted monomer, e.g. ethylene, propylene or vinyl chloride.

EXHIBIT VIII-E2
Environmental Protection Agency

CAPITAL COSTS OF BAG
DUST COLLECTORS

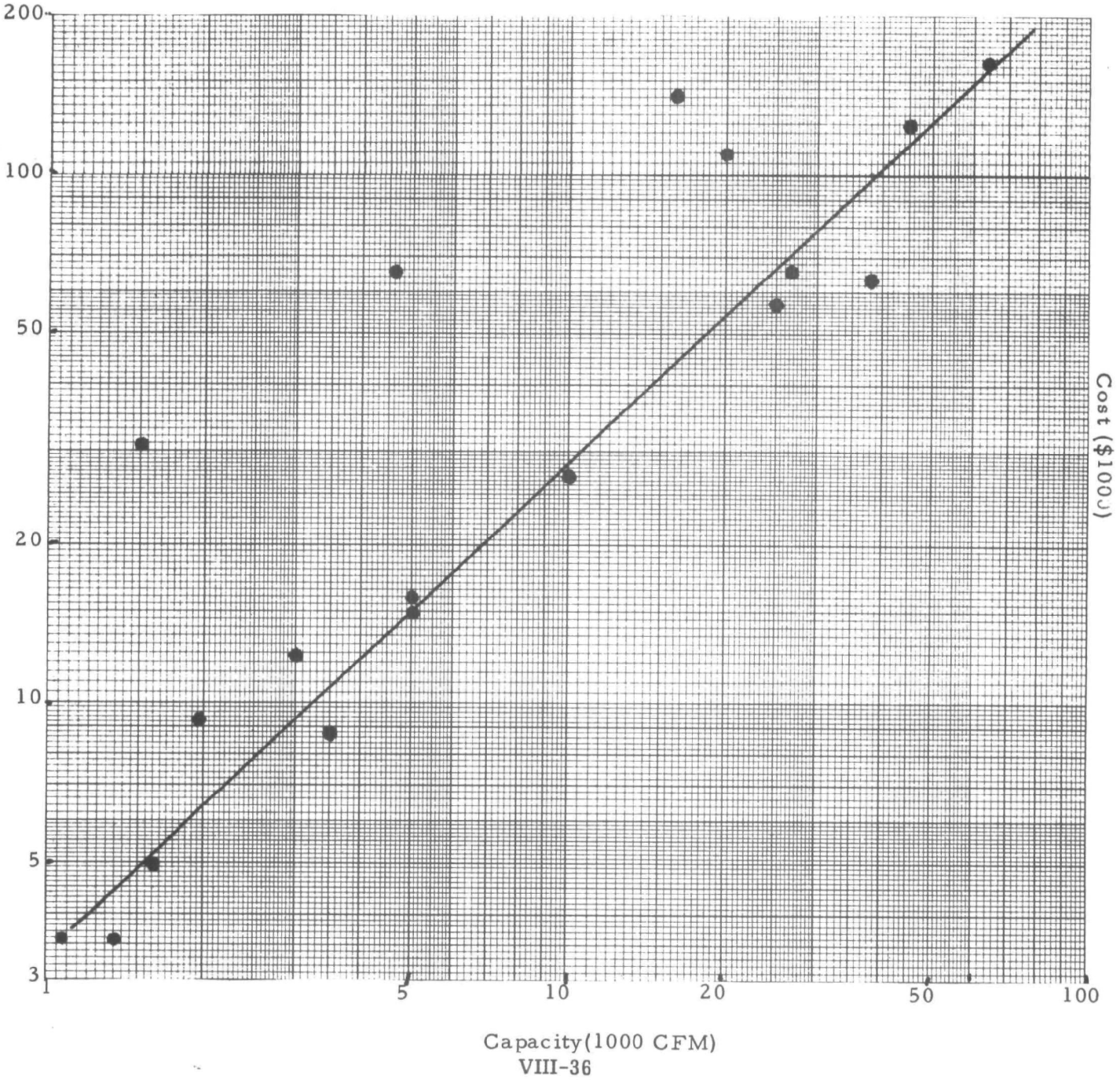

Source: Snell estimates based on data from Reference 45

Release to the atmosphere is undesirable for economic reasons. In that case, the fairly elaborate equipment required to recover the unreacted monomer should not be considered as emission control equipment.

In the second case, the stream is a mixture of monomer and "uncondensable" gas, e.g. air, nitrogen, or methane. Then, especially if the value of the product recovered is negligible compared to the operating cost, the compression and/or refrigerated condensation may be truly considered an emission control.

It is difficult to give equipment and operating costs in a general fashion. As an example the refrigeration to -40°F of a stream of nitrogen leaving a reactor at 100°F would require about 35 BTU's per lb. or 2,800 BTUs per 1,000 cft. Thus a stream of 10,000 CFM of N_2 (or air) would require 140 tons of refrigeration. This would necessitate a refrigeration system costing about $90,000 and an operating cost of the order of $140 per day or $46,000 per year.[50]

(4) Scrubbing Of Gases Is Effective In Removing Particulates And Some Very Soluble Vapors, Such As Acrylates - For Jet Scrubbing Operating Costs Are In The Order Of $2 Per 100 CFM Per 24 Hour Day

Scrubbing is bringing a stream of gas in as intimate contact as possible with a stream of liquid. The most common scrubbing agent is water, then various water solutions (e.g. caustic or hypochlorite). Low volatility oils can be sometimes used to dissolve hydrocarbon vapors or gases. The scrubbing stream is usually recycled with or without intermediate treatment.

There are two fundamental methods for scrubbing. The spray methods use the infringement of finely divided water countercurrently, crosswise or co-currently with the gas stream. A particular case is the venturi scrubber in which venturi effect is used to provide the pressure differential necessary to move the gas stream.

Another method is the use of packed towers (sometimes even plate towers). In these a stream of liquid flows by gravity countercurrently to the gas stream over suitable packing, generally in towers essentially similar in design to distillation towers. These devices are particularly successful when dissolution of a gaseous substance (e.g. ammonia, or HCl) is the objective. They may be adversely affected by high concentrations of particulates.

The capital cost of spray scrubbers varies in function of the capacity and the materials of construction. Exhibit VIII-E3 shows typical capacity cost relationships for jet scrubbers.[5] The power requirements for the flow of water is said to vary from 2 - 5 HP per 1,000 CFM of gas handled. Thus, a daily operating cost can be about $2.00 per 1,000 CFM per 24 hour day.

(5) Flaring, Even With Added Fuel, May Be A Costwise Attractive Method For Control Of Emissions, e.g. Hydrocarbon Resins

Destruction of most organic species by combustion in air is essentially complete at 1,200°F with residence time of 1 - 3 seconds.

Again, two alternatives can be considered. In the first alternative the waste stream contains enough organic material to sustain its own combustion at the required temperature. In that case, the costs are essentially the amortization cost of the equipment. Flares and their auxiliaries are only nominal in costs (less than $10,000), but the need to provide a stack of several hundred feet of height may be quite significant. For example, a capital cost of $340,000 for a flare system was claimed for a polypropylene installation producing 75,000 tons per year; the system disposed of 3,400 lbs of pollutant per hour; however, due to the value of products recovered in the Knock Out Drums there was a negative operating cost of $100,000 per year.[45]

In other installations a captial cost of about $20,000 is claimed for flare systems handling 500 SCFM with a height of 150 feet. The operating cost is said to be $10,600 per year.

For a similar system on a stream of negligible heating value, the estimated heat requirements would be 15 x 10^6 BTU's per 24 hours or 15,000 CFM of natural gas. At a cost of $0.028 per 100 CFM the cost of fuel would be about $5.00 per day or about $1,500 per year.[52]

(6) Adsorption Devices Represent Another Form Of Emission Control In Which Product Recovery May Be Possible, e.g. Alkyds

Carbon adsorption may be used in some cases. It usually is limited to streams containing a significant percentage of organic vapors and is particularly successful in solvent vapor recoveries. The method is not known to find appreciable application in the industry studied.

EXHIBIT VIII-E3
Environmental Protection Agency

CAPITAL COSTS OF JET SCRUBBERS

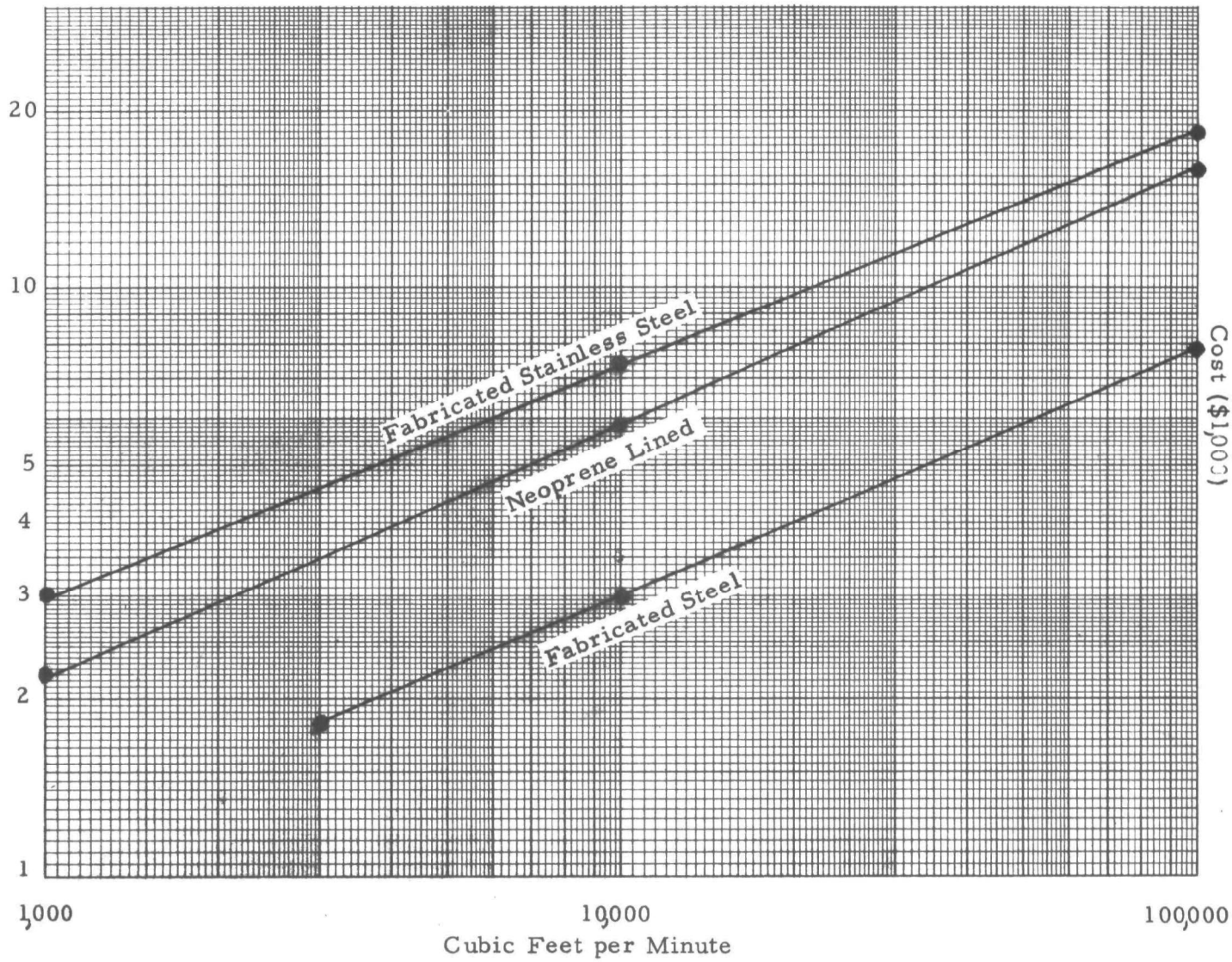

Pressure drops through the system limits its applicability to streams of moderate capacity, say less than 5,000 CFM.

Two factors limit their usefulness to this industry:

- Thebeds are quite sensitive to solid particles accumulation

- Adsorbed monomers may have a tendency to polymerize due to the possible catalytic effect of the adsorption process itself.

Two possible methods of utilization can be contemplated:

- Regeneration - It is often possible to regenerate the adsorbent "on site" either by pyrolysis or by steam stripping. In the latter case product values can be recovered.

- Spent adsorbent disposal - the spent adsorbent could be disposed of by incineration or landfill. Costs for the steam regeneration process can be estimated as follows: [53]

  - Capital cost for a unit handling 3,000 cfm - $12,000 - $13,000

  - Operating cost - $0.25 per hour for electricity, $0.50 for water and $0.90 for steam - with $250 per year for maintenance for a unit recovering about 24,000 gals per year of solvent. (0.2% concentration by weight)

  - Thus, a total operating cost of $13,500 per year can be estimated. This would represent $4.50 per CFM capacity per year.

  It is to be noted that the utility costs would be somewhat proportional to the amount of solvent adsorbed. Thus, a range of $2 to $6 per CFM per year appear reasonable.

An adsorption capacity of about 8% by weight is indicated. This as an alternative, the carbon could be disposed of. With a carbon cost of about $0.30 per lb this represents a cost of $3.75 per lb of adsorbate. This, therefore, looks like a highly uneconomical process and should be resorted to only for extremely toxic substances in very diluted streams.

* * * *

As a first approximation a range of values can be assigned for the operation of various emission control devices, discussed above, based on their nominal capacity.

These values are presented in Exhibit VIII-E4.

EXHIBIT VIII-E4

Environmental Protection Agency

EMISSION CONTROL COSTS

SUMMARY OF OPERATING COSTS OF VARIOUS METHODS

Bag Filters	$0.30 to 0.50 per year per CFM of capacity (*)
Compression Refrigeration	$3.0 to 6.0 per year per CFM of capacity (*)
Scrubbers	$0.40 to 0.60 per year per CFM of capacity (*)
Flare	$0.10 to 0.20 per year per CFM of capacity (**)
Regenerative Adsorption	$2.0 to 6.0 per year per CFM of capacity (***)

(*) Neglecting the value of recovered product.

(**) This figure assumes no heating values for the stream itself, but does not include supplying the necessary air in case of an essentially inert gas stream.

(***) Excluding value of recovered material and assuming a 0.05 to 0.3% by weight concentration of adsorbate. Excluding also the cost of any pretreatment of the gas stream.

Source: Snell

SECTION IX

REFERENCES

SECTION IX.

REFERENCES

1. United States Tariff Commission Reports: Synthetic Organic Chemicals, Production and Sales, 1967, 1968, 1969, 1970, 1971. Washington, Government Printing Office, (TC Publications, 295, 327, 412, 479, 614)

2. Anon: Journal of Commerce: December 27, 1972

3. Society of Plastics Industry: Confidential Communications, November 1973

4. Foster D. Snell, Inc.: Confidential Files, November 1973

5. Anon: Chemical Marketing Reporter 204: 9, December 24, 1973

6. Macbride, Roland R.: Will PVC's 1973 Crunch Become A Glut in 1975? Modern Plastics 50, No. 1: 66-69, January, 1973

7. Various Manufacturers: Private Communications, November, 1973

8. Chemical Information Services: Regional Directories of Chemical Producers, Stanford Research Institute, Menlo Park, California

9. Anon: Polyvinyl Alcohol Behemoth of Du Pont Comes On Stream Hungry For Textile Size Mart. Chemical Marketing Reporter 203: 3,12, April 2, 1973

10. ibid: August, 1971

11. Macbride, Roland R.: Still Plenty of Capacity in Polystyrene, But The Squeeze Is On. Modern Plastics 49, No. 8: 14-15, August, 1972

12. Anon: Tight Despite Expansion. Chemical Week 112, No. 11: 9, March 14, 1973

13. Anon: Plastics World 30: 42, August, 1972

14. Stanford Research Institute: Chemical Economic Handbook, Stanford Research Institute, Menlo Park, California

15. Anon: Chemical Marketing Reporter 201: October 26, 1970

16. Anon: Booming Growth Seen For Polyurethanes. Chemical & Engineering News 50, No. 8: 10-11, February 21, 1972

17. Department of Commerce: Statistical Abstracts of the United States, 1971: 829-894, Department of Commerce, Washington, D.C.

18. Repka, Jr., B.C.: Olefin Polymers. Kirk-Othmer Encyclopedia Of Chemical Technology, 2nd Edition 14: 231, 1967

19. ibid: 252-253

20. Smith, W.M.: Manufacture of Plastics, Part I: 119, 1964, Reinhold Publishing Corp., New York

21. Cantaw, M.J.R.: Vinyl Polymers (Chloride) Kirk-Othmer Encyclopedia Of Chemical Technology, 2nd Edition 21: 376, 1970

22. ibid: 372

23. Smith, W.M.: Manufacture of Plastics, Part I: 234, 1964, Reinhold Publishing Corp., New York

24. ibid: 229

25. ibid: 286

26. ibid: 276

27. Bishop, R.B.: Practical Polymerization for Polystyrene: 9, 1971, Cohners, Boston

28. Mark, H.F. et al: Encyclopedia of Polymer Science and Technology 13: 132, 1971. John Wiley & Sons, Inc., New York

29. Bishop, R.B.: Find Polystyrene Plant Costs, Hydrocarbon Processing 51, No. 11: 137-140, November, 1972

30. Smith, W.M.: Manufacture of Plastics, Part I: 451, 1964, Reinhold Publishing Corp., New York

31. ibid: 209

32. Mark, H.F. et al: Encyclopedia of Polymer Science and Technology. 10: 50, 1971. John Wiley & Sons, Inc., New York

33. Simonds, H.R. et al: Handbook of Plastics, 2nd Edition: 700, 1949. D. Van Nostrand Co., Inc., New York

34. Mraz, R.G. and Silver, R.P.: Alkyd Resins. Kirth-Othmer Encyclopedia of Chemical Technology, 2nd Edition 1: 851-882, 1963

35. Smith, W.M.: Manufacture of Plastics, Part I: 504, 1964, Reinhold Publishing Corp., New York

36. ibid: 399

37. Klug, E.D.: Cellulose Derivations. Kirk-Othmer Encyclopedia of Chemical Technology, 2nd Edition 4: 629, 1964

38. Smith, W.M.: Manufacture of Plastics, Part I: 504, 1964, Reinhold Publishing Corp., New York

39. ibid: 520

40. ibid: 524

41. Niehaus, W.R.: Safe Handling Practice for Acrylate Monomers. Paint and Varnish Production (PVP) 61, No. 5: 41-44, 1971

42. Toshihide, O.: The Chemical Components of Odor From Plastic Plants and Some Examples of Odor Control. Odor Research Journal, Japan 1 (1): 46-50, 1970

43. EPA: Private Communications, December, 1973

44. Anon: The Ideal Paint Plant, Manufacturing Committee, Toronto Paint Society

45. EPA: Private Communications, November, 1973

46. Arthur D. Little: Research On Chemical Odors, Part I - Odor Thresholds for 53 Commercial Chemicals: 21-24, Ocotber, 1968 for Manufacturing Chemists Assn., Washington, D.C.

47. Pacific Environmental Services, Inc., 2932 Wilshire Blvd., Santa Monica, Calif. 90403

48. Perry, J.H. et al: Chemical Engineers' Handbook: 20-74, 1963. McGraw-Hill Book Company, New York

49. ibid: 20-71

50. ibid: 26-25, 26-29

51. Webb: Paint Industry Magazine: January, 1958

52. Anon: Confidential Communications

53. Manzone, R.R. and Oakes, D.W.: Profitably Recycling Solvents From Process Systems. Pollution Engineering 5, No. 10: 23-24, October, 1973

54. Rolk, R.W. et al: Afterburner Systems Study: Environmental Protection Agency Office of Air Programs, Contract EHS-D-71-3, August, 1972, PB 212-560

55. Occupational Safety and Health Standards; National Concensus Standards and Established Federal Standards. Federal Register 36, No. 105, Part II: 10504-10505, May 29, 1971. Department of Labor, OSHA, Washington, D.C.

56. Patty, F.A.: Industrial Hygiene and Toxicology, Toxicology, Part II: Interscience Publishers, New York, 1966

57. Summers, W.: Odor Pollution of Air: 22-24, 1971. CRC Press, Cleveland

58. Anon: Putting the Nose To the Test, Chemical Week 112, No. 11: 35-36, March 14, 1973

59. Manufacturing Chemists Assn.: Physiological Effects. Air Pollution Abatement Manual: 22-26, 1951. Manufacturing Chemists Assn., Washington, D.C.

60. Anon: Detectors, Reagents, and Accessories for MSA Universal Testing Kits; Summary Data Sheets: Mine Safety Appliance Co., Pittsburgh, Pa., January, 1969

61. Compilation of Odor and Taste Threshold Values Data: ASTM Data Series DS 48: American Society for Testing and Materials, 1973

62. Press Release: Public Relations, B. F. Goodrich, Akron, O., January 23, 1974

63. Occupational Safety and Health Standards; Emergency Temporary Standard for Exposure to Vinyl Chloride; Federal Register 39, No. 67: 12342-12344, April 5, 1974. Department of Labor, OSHA, Washington, D.C.

APPENDICES

APPENDIX 1

ADDITIONAL PRODUCERS' LOCATIONS

APPENDIX 1

Environmental Protection Agency

PRODUCERS: POLYVINYL ACETATE

Producer and Location

CPC International, Inc., Charlotte, N.C.
Conchemco, Inc., Houston, Tex.
Dan Riber Mills, Inc., Baltimore, Md.
Kansas City, Mo.
Danville, Va.
De Soto, Inc., Berkeley, Calif.
Garland, Tex.
Chicago Heights, Ill.
H. B. Fuller Co., Atlanta, Ga.
St. Bernard (Cincinnati), O.
General Latex & Chem Corp., Charlotte, N.C.
Ashland, O.
Dalton, Ga.
Cambridge, Mass.
Jones-Blair Paint Co., Dallas, Tex.
Minnesota Mining & Mfg. Co., Decatur, Ala.
Napko Corp., Houston, Tex.
Onyx Oils & Resins, Inc., Brooker, Fla.
Newark, N.J.
Owens-Corning Fiberglas Corp., Anderson, S.C.
Philip Morris, Inc., Greenville, S.C.
Springdale, Conn.
Reliance Universla, Inc., Houston, Tex.
Louisville, Ky.
Seydel-Woolley & Co., Atlanta, Ga.
Standard Brands, Inc., Forest Park (Atlanta), Ga.
Clifton, N.J.
Cheswold, Del.
Chicago, Ill.
Stein, Hall & Co., Inc., Charlotte, N.C.
Bridgeview, Ill.
Newark, Calif.
Amalgamated Chem. Corp., Philadelphia, Pa.
Colloids, Inc., Franklin, N.J.
Defiance Indust. Inc., Baltimore, Md.
Emkay Chem. Co., Elizabeth, N.J.
Farnow, Inc., S. Kearny, N.J.
Great Northern Paint & Chem. Corp., E. Paterson, N.J.
Gulf Oil Corp., Lansdale, Pa.
H & N Chemical Co., Totowa, N.J.

Producer and Location

Hart Products Corp., Jersey City, N.J.
McClosky Varnish Co., Philadelphia, Pa.
Los Angeles, Calif.
Portland, Ore.
Benjamin Moore & Co., Newark, N.J.
St. Louis, Mo.
Northeastern Labs. Co., Inc., Melville, N.Y.
The O'Brien Corp., Baltimore, Md.
South Bend, Ind.
Polymeric Resins Corp., Wilmington, Mass.
Quaker Chem. Corp., Conshohocken, Pa.
SCM Corp., Reading, Pa.
Chicago, Ill.
Cleveland, O.
Huron, O.
San Francisco, Calif.
Scholler Bros., Inc., Elwood, N.J.
Squibb Beech-Nut, Inc., Canajoharie, N.Y.
Sun Chemical Corp., Wood Riber Junction, R.I.
Sybron Corp., Haledon, N.J.
Chas. S. Tanner Co., Providence, R.I.
U. S. Coatings Co., Inc., Kenilworth, N.J.
Franklin Chem. Co., Columbus, O.
The Hanna Paint Mfg. Co., Inc., Columbus, O.
The National Casein Co., Chicago, Ill.
PPG Indust., Inc., Circleville, O.
Pacific Holding Corp., Chicago, Ill.
Purex Corp., Ltd., Kansas City, Ka.
Morris, Ill.
Carson, Calif.
The Sherwin-Williams Co., Chicago, Ill.
Yenkin-Majestic Paint Corp., Columbus, O.
Bennett's, Salt Lake City, Utah
Diamond Shamrock Corp., Richmond, Calif.
Grow Chemical Corp., Oakland, Calif.
Kelly-Moore Paint Co., San Carlos, Calif.
Kohler-McLister Paint Co., Denver, Colo.
Norris Paint & Varnish Co., Salem, Ore.
Preservative Paint Co., Seattle, Wash.
Sinclair Paint Co., Los Angeles, Calif.
Union Oil Co. of California, La Mirada, Calif.

APPENDIX 1 (continued)

Environmental Protection Agency

PRODUCERS: STYRENE RESINS

Producer and Location

Borden Inc., Illiopolis, Ill.
Bainbridge, N.Y.
Leominster, Mass.
Compton, Calif.
Demopolis, Ala.
S. C. Johnson & Sons, Inc., Racine, Wisc.
Morton Chem Co., Ringwood, Ill.
The O'Brien Corp., South Bend, Ind.
South San Francisco, Calif.
Purex Corp., Ltd., Chicago, Ill.
Bristol, Pa.
Carson, Calif.
A. E. Staley Manufacturing Co., Lemont, Ill.
Kearney, N.J.
Beatrice Foods Co., Wilmington, Mass.
Howard Industries, Inc., Hicksville, N.Y.
Pennsylvania Industrial Chem. Corp., Clairton, Pa.
Phillip Morris, Inc., Springdale, Conn.
Polymeric Resins, Corp., Wilmington, Mass.
Reichhold Chems., Inc., Elizabeth, N.J.
Scholler Bros. Inc., Elwood, N.J.
Sybron Corp., Haledon, N.J.
Alabama Binder and Chemical Corp., Tuscaloosa, Ala.
Southern Petrochemical Corp., Channelview, Tex.

Environmental Protection Agency
PRODUCERS: PHENOLICS

Producer and Location

Poly Resins, Inc., Sun Valley, Calif.
Allied Chemical Corp., Los Angeles, Calif.
Capiagne, N.Y.
Whippany, N.J.
Des Plaines, Ill.
Allied Products Corp., Los Angeles, Calif.
Seattle, Wash.
Memphis, Tenn.
Orlando, Fla.
Long Island City, N.Y.
Chicago, Ill.
Detroit, Mich.
De Soto, Inc., Berkeley, Calif.
Garland, Tex.
Chicago Heights, Ill.
The Dexter Corp., Hayward, Calif.
Rocky Hill, Conn.
Cleveland, O.
Waukegan, Ill.
Georgia Pacific Corp., Coos Bay, Ore.
Conway, N.C.
Columbus, O.
Crossett, Ark.
Savannah, Ga.
Louisville, Miss.
Lupkin, Tex.
Hercules Inc., Eugene, Ore.
Tacoma, Wash.
Wilmington, Del.
Inmont Corp., Anaheim, Calif.
Chicago, Ill.
Cincinnati, O.
Grand Rapids, Mich.
Los Angeles, Calif.
Morganton, N.C.
Huntington, Ind.
Clifton, N.J.
Elizabeth, N.J.
Newark, N.J.

Producer and Location

PPG Industries, Inc., Cleveland, O.
Milwaukee, Wisc.
Torrance, Calif.
Atlanta (East Point), Ga.
Houston, Tex.
Springdale, Pa.
Preservative Paint Co., Seattle, Wash.
Rezolin, Inc., Chatsworth, Calif.
Taylor Corp., La Verne, Calif.
Betzwood, Pa.
Tenneco, Inc., San Francisco, Calif.
U. S. Plywood, Redding, Calif.
VWR United Corp., Portland, Ore.
Richmond, Calif.
Newark, O.
West Coast Adhesives, Co., Portland, Ore.
Weyerhaeuser Co., Longview, Wash.
Marshfield, Wisc.
Gulf Oil Corp., Alexandria, La.
Lansdale, Pa.
Masonite Corp., Gulfport, Miss.
MMM, Decatur, Ala.
Napko Corp., Houston, Tex.
National Casein Co., Tyler, Tex.
Riverton, N.J.
Chicago, Ill.
Onyx Oils & Resins, Inc., Brooks, Fla.
Newark, N.J.
Owens-Corning Fiberglas Corp., Waxahachie, Tex.
Barrington, N.J.
Kansas City, Kans.
Newark, O.
Sonoso Products Co., Hartsville, N.C.
Union Camp Corp., Valdosta, Ga.
Valentine Sugars, Inc., Lockport, La.
The Bendix Corp., Troy, N.Y.
The Budd Co., Bridgeport, Pa.
The Carbarundum Co., Niagara Falls, N.Y.
Clark Oil & Refining Corp., Tewksbury, Mass.

APPENDIX 1 (continued)

Environmental Protection Agency
PRODUCERS: PHENOLICS

Producer and Location

Crowley Tar Prod. Co., Inc., Paulsboro, N.J.
Firestone Tire and Rubber Co., Fall River, Mass.
Kroedler, Alphonse & Co., Lancaster, Pa.
Koppers Co., Inc., Petrolia, Pa.
Kyanize Paints, Inc., Everett, Mass.
Lawter Chems., Inc., South Kearny, N.J.
Millmaster Onyx Corp., Lyndhurst, N.J.
Pennsylvania Indust. Chem. Corp., Clairton, Pa.
Pioneer Plastics Corp., Auburn, Me.
Polyrez Co., Inc., Woodbury, N.J.
Raybestos-Manhatten Inc., Stratford, Conn.
Resyn Corp., Linden, N.J.
Rogers Corp., Manchester, Conn.
Rohm & Haas Co., Philadelphia, Pa.
Schenectady Chems. Inc., Rotterdam Junction, N.Y.
Schenectady, N.Y.
Shanco Plastics & Chem. Inc., Tonawanda, N.Y.
Standard Oil of New Jersey, Odenton, Md.
Stepan Chem. Co., Wilmington, Mass.
Sybron Corp., Birmingham, N.J.
Synvar Corp., Wilmington, Mass.
TRW Inc., Downington, Pa.
Uniroyal Inc., Naugatuck, Conn.
United-Erie, Inc., Erie, Pa.
U. S. Coatings Co., Inc., Kenilworth, N.J.
Westinghouse Electric Corp., W. Mifflin (Pittsburgh), Pa.
American Cyanamid Co., Evendale (Cincinnati), O.
CPC International, Inc., Forest Park, Ill.
Carboline Co., Xenia, O.
Clark Oil & Refining Corp., Blue Island, Ill.
P. D. George Co., St. Louis, Mo.
Hereseti & Chem. Co., Manetowoc, Wisc.
Illinois Central Indust., Inc., Troy, Mich.
Inland Steel Co., Alsip, Ill.
Ironsides Resins, Inc., Columbus, O.
Midwest Mfg. Corp., Burlington, Iowa
Mobil Oil Corp., Kankakee, Ill.
Plastics Engineering Co., Sheboygan, Wisc.
The Richardson Co., De Kalb, Ill.

Producers of Acrylic Coating Resins

The following companies supply acrylic coating resins to U. S. paint companies. They do not produce paint. Companies that also produce paint will be listed in a subsequent table.

Allied Chemical Corp., Lynwood, Calif.
Toledo, Ohio
Whippany, N. J.
American Cyanamid Co., Azusa, Calif.
Wallingford, Conn.
Archer Daniels Midland Co., Valley Park, Mo.
Ashland Oil & Refining Co., Fords, N. J.
Minnesota Mining & Manufacturing Co., St. Paul, Minn.
Monsanto Co., Addyston, Ohio
Santa Clara, Calif.
Springfield, Mass.
National Starch and Chemical Corp., Meredosia, Ill.
Plainfield, N. J.
Onyx Oils & Resins, Inc., Brooker, Fla.
Newark, N. J.
Polyvinyl Chemicals, Inc., Wilmington, Mass.
Purex Corp., Ltd., Chicago, Ill.
Los Angeles, Calif.
Philadelphia, Pa.
Reichhold Chemicals, Inc., Azusa, Calif.
Detroit, Mich.
Elizabeth, N. J.
Jacksonville, Fla.
S. San Francisco, Calif.
Rohm and Haas Co., Bristol, Pa.
Knoxville, Tenn.
Louisville, Ky.
A. E. Staley Mfg. Co., Cambridge, Mass.
Lemont, Ill.
Marlboro, Mass.
Union Carbide Corp., Bound Brook, N. J.
South Charleston, W. Va.
Union Oil Co. of Calif., Charlotte, N. C.
Chicago, Ill.
Los Angeles, Calif.
The Borden Chemical Co., Bainbridge, N. Y.
Compton, Calif.
Demopolis, Ala.
Illiopolis, Ill.
Leominster, Mass.
The Dow Chemical Co., Freeport, Tex.
Midland, Mich.
Pittsburgh, Calif.
Freeman Chemical Corp., Ambridge, Pa.
Saukville, Wisc.
H. B. Fuller Co., St. Bernard, Ohio
The Goodyear Tire & Rubber Co., Akron, Ohio
Jersey State Chemical Co., Haledon, N. J.
S. C. Johnson & Son, Inc., Waxdale, Wisc.

PRODUCERS : ACRYLICS

Producers of Polyacrylic Acid and Its Salts

Alco Standard Corp., Chattanooga, Tenn.
Philadelphia, Pa.
American Aniline & Extract Co., Calvert City, Ky.
Philadelphia, Pa.
Colloids, Inc., Newark, N.J.
Diamond Shamrock Corp., Cedartown, Ga.
The B. F. Goodrich Co., Calvert City, Ky.
W. R. Grace & Co., Lake Zurich, Ill.
Jordan Chemical Co., Folcroft, Pa.
Rohm and Haas Co., Bristol, Pa.
Knoxville, Tenn.
Philadelphia, Pa.

B. F. Goodrich and Rohm and Haas are the largest producers of polyacrylic acid and its salts.

Producers of Specialty Acrylates

Aceto Chemical Co., Inc., Carlstadt, N.J.
Alcolac Chemical Corp., Baltimore, Md.
American Aniline & Extract Co., Calvert City, Ky.
Philadelphia, Pa.
Borden Inc., Philadelphia, Pa.
Sartomer Resins, Inc., Essington, Pa.

Producers of Polyacrylamide Flocculants

American Cyanamid Co., Princeton, N.J.
Warners, N.J.
Woodridge, N.J.
Betz Laboratories, Inc., Trevose, Pa.
The Dow Chemical Co., Midland, Mich.
Hercules Inc., Hopewell, Va.
Merck & Co., Inc., Ellwood City, Pa.
Nalco Chemical Co., Chicago, Ill.
National Starch and Chemical Corp., Meredosia, Ill.
Standard Brands, Inc., Tylac Chemicals Div.,
Sayreville, N.J.
Stein, Hall & Co., Inc., Charlotte, N.C.

Producers of Acrylic Coatings and Resins

The following companies produce acrylic coatings and supply all or part of their resin demand from captive resin production.

Armstong Paint & Varnish Works, Inc., Chicago, Ill.
Baltimore Paint & Chemical Corp., Baltimore, Md.
Celanese Coatings Co., Detroit, Mich.
Newark, N.J.
Riverside, Calif.
Belvidere, N.J.
Louisville, Ky.
Cook Paint & Varnish Co., Detroit, Mich.
Houston, Tex.
De Soto Chemical Coatings, Inc., Berkeley, Calif.
Chicago Heights, Ill.
Garland, Tex.
E. I. du Pont de Nemours & Co., Inc., Belle, W. Va.
Chicago, Ill.
Everett, Mass.
Flint, Mich.
Fort Madison, Iowa
Parlin, N.J.
Philadelphia, Pa.
S. San Francisco, Calif.
Toledo, Ohio
Tucker, Ga.
The Glidden Co., Chicago, Ill.
Cleveland, Ohio
Huron, Ohio
Reading, Pa.
San Francisco, Calif.
Guardsman Chem. Coatings, Inc., Grand Rapids, Mich.
Hunt Foods & Industries, Inc., Los Angeles, Calif.
Seattle, Wash.
S. San Francisco, Calif.
Interchemical Corp., Anaheim, Calif.
Detroit, Mich.
Cincinnati, Ohio
Newark, N.J.
Jones-Blair Paint Co., Inc., Dallas, Tex.
Midland Industrial Finishes Co., Inc., Waukegan, Ill.
Mobil Chemical Co., Cleveland, Ohio
National Lead Co., Philadelphia, Pa.
The O'Brien Corp., South Bend, Ind.
PPG Industries, Circleville, Ohio
Milwaukee, Wis.
Newark, N.J.
Springdale, Pa.
The Sherwin-Williams Co., Chicago, Ill.
Standard T. Chemical Co., Inc., Chicago, Ill.
Staten Island, N.Y.

APPENDIX 1 (continued)

Environmental Protection Agency

PRODUCERS: POLYAMIDE RESINS [8]

Producer and Location

AZ Products, Inc., Eaton Park, Fla.
Cooper Polymers, Inc., Wilmington, Mass.
Emery Industries, Inc., Cincinnati, O.
The Epoxylite Corp., South El Monte, Calif.
Buffalo, N.Y.
General Mills, Inc., Kankakee, Ill.
Lawter Chemicals, Inc., South Kearny, N.J.
Mobil Oil Corp., Cicero, Ill.
Reichhold Chemicals, Inc., Ballard Vale, Mass.
Stepan Chemical Co., Millsdale, Ill.
Sun Chemical Corp., Chester, S.C.
Wood River Junction, R.I.
Tenneco Chemicals, Inc., Garfield, N.J.
U.S.M. Corporation, Middleton, Mass.

APPENDIX 2

DEVELOPMENT OF EMISSION POTENTIAL INDICES

Environmental Protection Agency

TECHNICAL EVALUATION GRID

Polypropylene

Work Sheet

A = Receiving and storage of process chemicals:
Propylene is stored as a liquid. Diluents are stored blanketed with an inert gas. Tank vents and feed lines are emission sources. Catalysts are shipped either as solids or diluted with a hydrocarbon solvent - emissions may occur as a result of materials handling.

B = Purification of monomers and/or solvents:
Propylene and solvent are recovered from polymerization unit and are condensed and recycled to reactor. The deactivation solvent is distilled and recycled.

C = Prepolymerization:

Propylene, solvent and catalyst are premixed. An emission source is the premix tank vent.

D = Polymerization:

Polymerization conducted at under 200 psig and between 100 and 200°F. Solvent and propylene may be vented.

E = Polymer separation:
Propylene and other volatiles are flashed off. The catalyst is deactivated by adding water or alcohol and polymer filtered off and dried in a rotary or spray drier. Emissions occur during catalyst deactivation, transport of polymer to and through driers.

F = Compounding:
Polymer is compounded with the necessary additives, melted and extruded. Some residual solvent is emitted during melting and extrusion.

Factor	Intensity Rating (A)	Factor Weight (B)	AxB
A	10	0.1	1.0
B	10	0.2	2.0
C	6	0.1	0.6
D	8	0.2	1.6
E	10	0.3	3.0
F	6	0.1	0.6
		Index Number	8.8

Environmental Protection Agency

TECHNICAL EVALUATION GRID

HD Polyethylene

Work Sheet

A = Receiving and storage of process chemicals:

Ethylene is stored as a liquid. Tank vents and feed lines may be a source of emissions. Cycloparaffins such as cyclohexane are liquids.

B = Purification of monomers and/or solvents:

Ethylene and diluent/solvent are recovered, purified and recycled. Venting of compressors and condensers can be a source of emissions.

C = Prepolymerization:

Ethylene and diluent/solvent are premixed. Venting of this chamber is a source of emission.

D = Polymerization:

Polymerization is conducted at 20-30 atm and 125-175°C.

E = Polymer separation:

Monomer is flashed off and recycled. Polymer/solvent solution contacted with water or cooled and polymer precipitates and is filtered. Polymer is dried. Conveyer systems and dryer vents are a major source of emission.

F = Compounding:

Polymer may be remelted, additives added and extruded. Vents on extruders and volatilization of solvent during remelting may be a source of emission.

Factor	Intensity Rating (A)	Factor Weight (B)	AxB
A	10	0.05	0.5
B	10	0.2	2.0
C	4	0.05	0.2
D	8	0.2	1.6
E	10	0.3	3.0
F	6	0.2	1.2
		Index Number	8.5

Environmental Protection Agency

TECHNICAL EVALUATION GRID

LD Polyethylene

Work Sheet

A = Receiving and storage of process chemicals:

Ethylene is stored as a liquid and tank vents may be a source of emissions. Initiators such as organic peroxides are stored separately in relatively small containers.

B = Purification of monomers and/or solvents:

Ethylene monomer is separated from the polymer mass, purified and recycled. Emissions can occur from venting and leaks.

C = Prepolymerization:

Ethylene is compressed in stages. Emissions are possible at the compressor.

D = Polymerization:

Ethylene is polymerized at 15,000-50,000 psi and 100-200°C. Polymerization is continuous and emissions can occur at vents, valves, and other leaks.

E = Polymer separation:

Polymer is usually extruded as strands directly from the devolatilizer and a major source of emission is at extruder vents where the monomer still dissolved in the polymer is emitted.

F = Compounding:

The polymer may be remelted, additives added and again extruded. Extruder vents are a major source of emission, but not as great as the previous stage.

Factor	Intensity Rating (A)	Factor Weight (B)	AxB
A	10	0.1	1.0
B	8	0.1	0.8
C	4	0.1	0.4
D	10	0.2	2.0
E	8	0.3	2.4
F	6	0.2	1.2
		Index Number	7.8

Environmental Protection Agency

TECHNICAL EVALUATION GRID

Styrene Resins
(Bulk Continuous Solution
For Crystal Polystyrene)

Work Sheet

A = Receiving and storage of process chemicals:

Styrene is the monomer used and ethyl benzene is the solvent. Some emissions can occur as a result of styrene storage vents.

B = Purification of monomers and/or solvents:

Monomer and ethylbenzene are recovered and recycled.

C = Prepolymerization:

Monomer and solvent are premixed.

D = Polymerization:

Polymerization conducted in stages starting at about 110°C and increasing to 170°C.

E = Polymer separation:

Polymer is devolatilized at 225-250°C and polymer fed to an extruder, cooled, cut and bagged.

F = Compounding:

Factor	Intensity Rating (A)	Factor Weight (B)	AxB
A	6	-	-
B	10	0.3	3.0
C	2	-	-
D	$\frac{2+6}{2} = 4$	0.1	0.4
E	8	0.6	4.8
F	-	-	-
		Index Number	8.2

Environmental Protection Agency

TECHNICAL EVALUATION GRID

Styrene Resins
(Suspension Process For
Crystal Polystyrene)

Work Sheet

A = Receiving and storage of process chemicals:

Styrene is the only monomer used. Other ingredients include small amounts of additives, suspending agents, buffering agents and initiators.

B = Purification of monomers and/or solvents:

None

C = Prepolymerization:

Monomer pumped into hot water containing the additives. Reactor venting is a source of emission.

D = Polymerization:

Polymerization conducted in a stirred reactor at 190°F. Reactor vents are a source of emissions.

E = Polymer separation:

Polymer mass is washed with water, the beads are centrifuged, dried, extruded and packaged.

F = Compounding:

None

Factor	Intensity Rating (A)	Factor Weight (B)	AxB
A	6	0.05	0.3
B	-	-	-
C	2	0.05	0.1
D	2	0.2	0.4
E	10	0.7	7.-
F	-		
		Index Number	7.8

Environmental Protection Agency

TECHNICAL EVALUATION GRID

Styrene Resins
(Suspension Process For
Impact Polystyrene)

Work Sheet

A = Receiving and storage of process chemicals:

Rubber and styrene are raw materials. Styrene storage tank vent is minor emission source.

B = Purification of monomers and/or solvents:

None

C = Prepolymerization:

Rubber is dissolved in styrene monomer and converted to 10-20% polymer.

D = Polymerization:

The Rubber-styrene is suspended in water, peroxide added and polymerization conducted at 90°-130°C. Emissions result from reactor venting.

E = Polymer separation:

Polymer mass is flushed into a mechanical separator, the beads are washed, centrifuged, dried and extruded. Emissions result from extruder and drier vents.

F = Compounding:

Factor	Intensity Rating (A)	Factor Weight (B)	AxB
A	6	0.1	0.6
B	-	-	-
C	6	0.1	0.6
D	8	0.4	3.2
E	8	0.4	3.2
F	-	-	-
		Index Number	7.6

Environmental Protection Agency

TECHNICAL EVALUATION GRID

Styrene Resins
(Bulk Continuous Process
For Impact Polystyrene)

Work Sheet

A = Receiving and storage of process chemicals:

Rubber and styrene are raw materials. Styrene storage tank is a minor emission source.

B = Purification of monomers and/or solvents:

Styrene is recovered and recycled.

C = Prepolymerization:

Rubber is dissolved in styrene monomer.

D = Polymerization:

Polymerization conducted in a continuous tower operating in temperature gradients from 90°C to 150-200°C.

E = Polymer separation:

Polymer mass is devolatilized in a thin-film evaporator or gear evolatilizer, extruded and packaged.

F = Compounding:

Factor	Intensity Rating (A)	Factor Weight (B)	AxB
A	6	0.05	0.3
B	8	0.1	0.8
C	4	0.05	0.2
D	6	0.5	3.-
E	8	0.3	2.4
F	-	-	-
		Index Number	6.7

Environmental Protection Agency

TECHNICAL EVALUATION GRID

Styrene Resins
(ABS Process)

Work Sheet

A = Receiving and storage of process chemicals:

Raw materials include styrene, butadiene and acrylonitrile with peroxides being used as catalysts. Emission sources are vents from storage tank.

B = Purification of monomers and/or solvents:

Monomers are recovered and recycled.

C = Prepolymerization:

D = Polymerization: Two separate polymerizations are conducted.

1) Acrylonitrile and Butadiene are emulsified in water and polymerized at 105°F. Monomers are removed by stripping with steam under vacuum.

2) Styrene and acrylonitrile are emulsified in water and polymerized at 122°F.

E = Polymer separation:

Both (1) and (2) above are emulsions and are stored.

F = Compounding: (1) and (2) above are mixed and coagulated or floculated by acidification, the crumb is washed with water and dried. It is further compounded by feeding the dried crumb to an extruder or banbury type mixer where ABS is fluxed, milled and extruded.

Factor	Intensity Rating (A)	Factor Weight (B)	AxB
A	8	0.05	0.4
B	10	0.05	0.5
C	2	-	-
D	6	0.7	4.2
E	-	-	-
F	8	0.2	1.6
		Index Number	6.7

Environmental Protection Agency

TECHNICAL EVALUATION GRID

Coumarone-Indene And Petroleum Resins

Work Sheet

A = Receiving and storage of process chemicals:

Coal and petroleum tar oils are the basic raw materials. Aromatic solvents are used extensively.

B = Purification of monomers and/or solvents:

Tar oils are fractionated and blended. Emissions occur at condenser vents.

C = Prepolymerization:

None

D = Polymerization:

Polymerization begins at low temperature and the exotherm raises temperature to 95-105oC.

E = Polymer separation:

Polymer is washed and heated to 200°C and flashed under vacuum or injected with steam and drummed or flaked.

F = Compounding:

Factor	Intensity Rating (A)	Factor Weight (B)	AxB
A	6	0.1	0.6
B	8	0.2	1.6
C	-		
D	2	0.2	0.4
E	$\frac{8 + 10}{2} = 9$	0.5	4.5
F	4		
		Index Number	7.1

Environmental Protection Agency

TECHNICAL EVALUATION GRID

Vinyl Resins
(Polyvinyl Chloride)

Work Sheet

A = Receiving and storage of process chemicals:

Vinyl chloride and comonomers, i.e. vinylidene chloride, vinyl acetate are principle monomers. Plasticizers and ketone solvents are also used in compounding. Emissions can occur from storage tank vents.

B = Purification of monomers and/or solvents:

Vinyl chloride is recovered from reactor and distilled and recycled.

C = Prepolymerization:

Monomer and water are mixed with the initiator.

D = Polymerization:

Polymerization conducted at 45-55°C to 90% conversion.

E = Polymer separation:

Polymer transferred to a dump tank, monomer is removed under vacuum and sent to distillation unit. Polymer separated by centrifugation and dried in a rotary drier.

F = Compounding:

PVC may be dissolved in ketones or plasticized by mixing in heated blenders.

Factor	Intensity Rating (A)	Factor Weight (B)	AxB
A	10	0.05	0.5
B	8	0.2	1.6
C	2	0.05	0.1
D	6	0.3	1.8
E	8	0.3	2.4
F	8	0.1	0.8
		Index Number	7.2

Environmental Protection Agency

TECHNICAL EVALUATION GRID

Vinyl Resins
(Polyvinyl Alcohol)

Work Sheet

A = Receiving and storage of process chemicals:

Polyvinyl acetate (beads) is the basic raw material. Methanol is used in alcoholysis of the polyvinyl acetate. Sodium hydroxide is the catalyst.

B = Purification of monomers and/or solvents:

Methanol recovery. Impurities consist of methyl acetate.

C = Prepolymerization:

PVAc is dissolved in hot methanol (120-140°F)

D = Polymerization:

Sodium hydroxide in methanol is added to convert the acetate to alcohol and gellation occurs. Additional methanol is added, after the gel is ground, and alcoholysis is completed to desired degree.

E = Polymer separation:

The slurry is sent to an expressor where liquid and solid are separated. The solid is dried in a rotary drier.

F = Compounding:

Factor	Intensity Rating (A)	Factor Weight (B)	AxB
A	8	-	-
B	4	0.2	0.8
C	6	-	-
D	2	0.1	0.2
E	8	0.7	5.6
F	-	-	-
		Index Number	6.6

Environmental Protection Agency

TECHNICAL EVALUATION GRID

Vinyl Resins
(Polyvinyl Acetate)

Work Sheet

A = Receiving and storage of process chemicals:

Vinyl Acetate is the main constituent. Many other ingredients, i.e. emulsifier, catalyst, protective colloids, buffers are used in minor quantities. Emissions are principally vinyl acetate venting.

B = Purification of monomers and/or solvents:

None

C = Prepolymerization:

Vinyl acetate is mixed with water and other ingredients
Venting of reactor is a source of emissions.

D = Polymerization:

Polymerization conducted at 67-80°C with reflux.

E = Polymer separation:

Emulsion is cooled and transferred to storage.

F = Compounding:

Factor	Intensity Rating (A)	Factor Weight (B)	AxB
A	8	.1	0.8
B	-	-	-
C	2	.1	0.2
D	4	0.7	2.8
E	2	.1	0.2
F	-	-	-
		Index Number	4.0

Environmental Protection Agency

TECHNICAL EVALUATION GRID

Polyamides
(Nylon 6)

Work Sheet

A = Receiving and storage of process chemicals:

Caprolactam and acetic acid are raw materials.

B = Purification of monomers and/or solvents:

Monomer is recovered by steam distillation of polymer at 300-400°C.

C = Prepolymerization:

None.

D = Polymerization:

Polymerization conducted at 255-260°C in presence of acetic acid.

E = Polymer separation:

Polymer removed to surge tank, extruded, washed with water at 180-195°F, dewatered by filtering or centrifugation and dried. Emissions through extruder vents, drier.

F = Compounding:

Factor	Intensity Rating (A)	Factor Weight (B)	AxB
A	7	-	
B	8	0.6	4.8
C	-		
D	4	0.1	0.4
E	8	0.3	2.4
F			
		Index Number	7.6

Environmental Protection Agency

TECHNICAL EVALUATION GRID

Polyamides
(Nylon 6,6)

Work Sheet

A = Receiving and storage of process chemicals:

Hexamethylene diamine and adipic acid are raw materials used. Some slight emission may come from the diamine.

B = Purification of monomers and/or solvents:

None.

C = Prepolymerization:

Equimolar quantities of diamine and adipic acid, in water, are mixed to form the "Nylon salt", and partially evaporated.

D = Polymerization:

Polymerization conducted at 260-280°C and 250 psig with controlled venting.

E = Polymer separation:

Extruded or cast directly.

F = Compounding:

Factor	Intensity Rating (A)	Factor Weight (B)	AxB
A	2	-	-
B	-	-	-
C	2	0.2	0.4
D	8	0.7	5.6
E	8	0.1	0.8
F	-	-	-
		Index Number	6.8

Environmental Protection Agency

TECHNICAL EVALUATION GRID

Cellulosics
(Cellulose Acetate)

Work Sheet

A = Receiving and storage of process chemicals:

Cellulose is the "monomer" used. Major process chemicals include acetic acid, acetic anhydride, methylene chloride, solvents (MEK, ethanol, methanol, benzene)

B = Purification of monomers and/or solvents:

Distillation of acetic acid, methylene chloride.

C = Prepolymerization:

Cellulose is added slowly to a mixture of acetic anhydride and glacial acetic acid with small amounts of sulfuric acid (7-10°C) in a mixing tank, then pumped to the acetylator.

D = Polymerization:

The temperature is kept below 30°C until acetylation is complete; then pumped to a hydrolyzer. (If methylene chloride is used, acetylation is conducted at reflux, about 40-50°C).

E = Polymer separation:

The mixture is dumped into a large volume of water, centrifuged (the acetic acid is recovered and reused), washed with water, centrifuged and dried. Emissions occur as a result of drier vents.

F = Compounding:

Cellulose acetate is usually compounded by either dry compounding or solution compounding. In dry compounding, emissions are very small. In solvent compounding, however, solvent emissions are common and relatively high.

Factor	Intensity Rating (A)	Factor Weight (B)	AxB
A	8	-	-
B	6	0.1	0.6
C	2	-	-
D	$\frac{2 + 4}{2} = 3$	0.1	0.3
E	6	0.3	1.8
F	8	0.5	4.-
		Index Number	6.7

Environmental Protection Agency

TECHNICAL EVALUATION GRID

Amino Resins

Work Sheet

A = Receiving and storage of process chemicals:

Urea and melamine are solids; formaldehyde in the form of 37% solids.

B = Purification of monomers and/or solvents:

None.

C = Prepolymerization:

None.

D = Polymerization:

Polymerization conducted at 75-150°F or at reflux temperature. Formaldehyde is probably emitted.

E = Polymer separation:

Package directly after filtering or pass on to compounding. Formaldehyde odors emitted during packaging.

F = Compounding:

Most U-F and M-F resins are compounded into molding powders. Others are spray dried directly. Emissions occur in drying hoppers or in cyclone exhausts.

Factor	Intensity Rating (A)	Factor Weight (B)	AxB
A	$\frac{2 + 4}{2}$ = 3	0.1	0.3
B	-	-	-
C	-	-	-
D	4	0.4	1.6
E	2	0.1	0.2
F	8	0.4	3.2
		Index Number	5.3

Environmental Protection Agency

TECHNICAL EVALUATION GRID

Acrylics
(Emulsion Polymerization)

Work Sheet

A = Receiving and storage of process chemicals:

Acrylic monomers.

B = Purification of monomers and/or solvents:

None.

C = Prepolymerization:

Monomer is added to the water containing initiators and reactor purged with an inert gas. Emissions and aerosols can occur as result of purging.

D = Polymerization:

There is a short induction period (30-50°C) and a vigorous reaction occurs and temperatures may approach 90-95°C. Polymerization essentially complete in 15 minutes.

E = Polymer separation:

Monomers are removed by steam stripping to lower odor. Monomers are usually not reused and are destroyed. Emissions are possible during drumming operations or during storage.

F = Compounding:

None.

Factor	Intensity Rating (A)	Factor Weight (B)	AxB
A	8	.1	0.8
B	-		
C	2		
D	5	.8	4.0
E	6	.1	0.6
F	-		-
		Index Number	5.4

Environmental Protection Agency

TECHNICAL EVALUATION GRID

Acrylics
(Solution Polymerization)

Work Sheet

A = Receiving and storage of process chemicals:

Acrylic monomers; aromatic solvents, i.e. xylene, toluene; ketones, i.e. MIBK, MEK; others.

B = Purification of monomers and/or solvents:

None.

C = Prepolymerization:

None/

D = Polymerization:

Solvent is placed in the kettle and at reflux, separate streams of monomer and initiator are added over a period of 8 to 24 hours. Emissions through condenser venting and leakage.

E = Polymer separation:

Polymer mix is sent to storage or drummed directly. Emissions during drumming.

F = Compounding:

None.

Factor	Intensity Rating (A)	Factor Weight (B)	AxB
A	8	0.1	0.8
B	-	-	-
C	-	-	-
D	4	0.8	3.2
E	6	0.1	0.6
F	-	-	-
		Index Number	4.6

Environmental Protection Agency

TECHNICAL EVALUATION GRID

Alkyds

Work Sheet

A = Receiving and storage of process chemicals:

Anhydrides, fatty acids, oils, and polyhydric alcohols are either liquids or solids with low vapor pressure. Solvents, mostly aromatic, are used as thinners.

B = Purification of monomers and/or solvents:

None.

C = Prepolymerization:

None.

D = Polymerization:

Polymerization carried out at 210-250°C with solvent or azeotropic distillation. Sparge gas used to supplement agitation. Emissions occur through solvent losses in distillation, aerosol formation with sparge gas.

E = Polymer separation:

Polymer is dropped into a thinning tank containing solvent. Addition is made at reflux. Solvent emissions occur during venting.

F = Compounding:

Solvent odors prevalant in shipping area because of filling open-head drums and spillage.

Factor	Intensity Rating (A)	Factor Weight (B)	AxB
A	3	0.05	.2
B	-	-	
C	-	-	
D	4	0.5	2.0
E	6	0.4	2.4
F	4	0.05	0.2
		Index Number	4.8

Environmental Protection Agency

TECHNICAL EVALUATION GRID

Polyesters

Work Sheet

A = Receiving and storage of process chemicals:

The anhydrides used are all solids. Glycols are liquids of low vapor pressure and the reactive monomer or solvent is usually styrene, a liquid of high vapor pressure.

B = Purification of monomers and/or solvents:

None.

C = Prepolymerization:

None.

D = Polymerization:

Polymerization conducted at 190-220°C with water of reaction removed through a condenser. Reaction mass is sparged during cooking to remove water. Emissions occur through condenser vents, reactor gaskets.

E = Polymer separation:

Polymer mass is cooled to 100-150°C and dropped into a thinning tank containing monomer. Venting results in emissions.

F = Compounding:

Factor	Intensity Rating (A)	Factor Weight (B)	AxB
A	2	0.1	0.2
B	-		
C	-		
D	4	0.4	1.6
E	6	0.5	3.0
F	-		
		Index Number	4.8

Environmental Protection Agency

TECHNICAL EVALUATION GRID

Epoxy Resins

Work Sheet

A = Receiving and storage of process chemicals:

Epichlorohydrin and Bisphenol A are the monomers. Small quantities of xylene or methanol are used for salting out purposes.

B = Purification of monomers and/or solvents:

Recover epichlorohydrin.

C = Prepolymerization:

None.

D = Polymerization:

Polymerization conducted at epichlorohydrin b.p. 116°C.

E = Polymer separation:

Excess epichlorohydrin removed by vacuum distillation and recycled. Filter, wash resin with warm water; heat resin to 100°C under vacuum and drum.

F = Compounding:

Factor	Intensity Rating (A)	Factor Weight (B)	AxB
A			-
B	6	0.1	0.6
C			-
D	4	0.4	1.6
E	4	0.5	2.0
F			
		Index Number	4.2

Environmental Protection Agency

TECHNICAL EVALUATION GRID

Phenolic and Other Tar Acid Resins

Work Sheet

A = Receiving and storage of process chemicals:

Phenol and Formalin (37% formaldehyde) are the reactive ingredients. Sometimes a solvent such as Butanol, Ethanol, MEK are used in making solution resins.

B = Purification of monomers and/or solvents:

None.

C = Prepolymerization:

Venting of reactor during charging.

D = Polymerization:

Polymerization at atmospheric reflux temperature (60-85°C), then temperature raised to 85-90oC by refluxing under pressure. Emissions of phenol, formaldehyde and methanol occur during reflux through condenser vents.

E = Polymer separation:

Water is removed by vacuum distillation. Resin can be discharged directly into drums, diluted with solvent, flaked or cured in molds.

F = Compounding:

Resins may be compounded with filler. Some may be pulverized with hexamethylenetetramine.

Factor	Intensity Rating (A)	Factor Weight (B)	AxB
A	$\frac{2+6}{2} = 4$	-	
B	-		
C	2	0.1	0.2
D	4	0.4	1.6
E	$\frac{2+6}{2} = 4$	0.4	1.6
F	6	0.1	0.6
		Index Number	4.0

Environmental Protection Agency

TECHNICAL EVALUATION GRID

Polyurethanes

Work Sheet

A = Receiving and storage of process chemicals:

Diisocyanates, polyols and polyesters are major raw materials. Solvents, when used, are Cellosolve esters, and aromatic solvents, i.e. xylene, or toluene. Nitrogen is used to blanket reaction kettles.

B = Purification of monomers and/or solvents:

None.

C = Prepolymerization:

None.

D = Polymerization:

Diisocyanates are added rapidly to polyols or polyesters cold, then heated at 110-115°C. The reaction mass is blanketed with nitrogen. Emissions result from reactor vents during reaction, and when solvents are added.

E = Polymer separation:

Polymer mass is cooled, solvent added and stored.

F = Compounding:

Factor	Intensity Rating (A)	Factor Weight (B)	AxB
A	6	0.1	0.6
B	-	-	-
C	-	-	-
D	2	0.8	1.6
E	4	0.1	0.4
F	-	-	-
		Index Number	2.6

APPENDIX 3

HAZARD, ODOR AND PHYSICAL DATA ON PRINCIPAL POLYMER INDUSTRY CHEMICALS

APPENDIX 3
Environmental Protection Agency
POLYURETHANES

Product	Safety: OSHA[55]	Safety: Other	Odor Threshold	Physical Data: b.p. (°C)	Physical Data: Vapor Pressure (mmHg (°C))
Toluene Diisocyanate	.02 ppm = .14 mg/m^3		.4 ppm [56]	250.0	<1
4,4' - Diphenylmethane Diisocyanate	.02 ppm = .2 mg/m^3		n.a.	n.a.	n.a.
Hexamethylene Diisocyanate	n.a.	n.a.	n.a.	n.a.	n.a.
4,4',4" - Triphenylmethane Triisocyanate	n.a.	n.a.	n.a.	n.a.	n.a.
Xylene	100 ppm = 435 mg.m^3		20 ppm = 100 mg/m^3 [57]	139.0	10 (29)
Ethylene Glycol Monoethyl Ether	200 ppm = 740 mg/m^3		ethereal odor [56]	134.7	5.3 (25)
Toluene	200 ppm		40 ppm = 140 mg/m^3 [57]	110.6	30 (26)
Mineral Spirits	n.a.	500 ppm [56]	n.a.	150-210	n.a.
Ethyl Acetate	400 ppm = 1,400 mg/m^3		50 ppm = 180 mg/m^3 [57]	77.0	100 (25)
Butyl Acetate	150 ppm = 710 mg/m^3		n.a.	125.0	15 (25)
Methyl Ethyl Ketone	200 ppm = 590 mg/m^3		25 ppm = 80 mg/m^3 [57]	79.6	100 (25)
Methyl Isobutyl Ketone	100 ppm = 410 mg/m^3		8 ppm = 32 mg/m^3 [57]	115.8	7.5 (25)

APPENDIX 3 (continued)
Environmental Protection Agency
ALKYDS

Product	Safety: OSHA [55]	Safety: Other	Odor Threshold	Physical Data: b.p. (°C)	Physical Data: Vapor Pressure (mmHg (°C))
Phthalic Anhydride	2 ppm = 12 mg/m^3		choking odor [56]	284.0	n.a.
Isophthalic Anhydride	n.a.	n.a.	choking odor (?) [56]	n.a.	n.a.
Maleic Anhydride	.025 ppm = 1 mg/m^3		n.a.	202.0	n.a.
Fumaric Acid	n.a.	very low toxicity [56]	n.a.	200.0 sublimes	<1
Azelaic Acid	n.a.	very low toxicity [56]	n.a.	286.5	<1
Succinic Acid	n.a.	very low toxicity [56]	odorless [56]	235.0	n.a.
Adipic Acid	n.a.	very low toxicity [56]	n.a.	265.0	<1
Sebacic Acid	n.a.	very low toxicity [56]	n.a.	294.5	n.a.
Xylene	100 ppm = 435 mg/m^3		20 ppm = 100 mg/m^3 [57]	139.0	10 (29)
Toluene	n.a.	200 ppm olifactory fatigue [56]	.17 ppm [46]	110.6	30 (26)

APPENDIX 3 (continued)
Environmental Protection Agency
POLYESTERS

Product	Safety: OSHA [55]	Safety: Other	Odor Threshold	Physical Data: b.p. (°C)	Physical Data: Vapor Pressure (mmHg (°C))
Phthalic Anhydride	2 ppm = 12 mg/m^3		choking odor [56]	284.0	n.a.
Maleic Anhydride	.025 ppm = 1 mg/m^3		n.a.	202.0	n.a.
Fumaric Acid	n.a.	very low toxicity [56]	n.a.	200.0 sublimes	n.a.
Isophthalic Anhydride	n.a.	n.a.	choking odor (?) [56]	n.a.	1
Succinic Acid	n.a.	very low toxicity [56]	odorless [56]	235.0	n.a.
Adipic Acid	n.a.	very low toxicity [56]	n.a.	265.0	1
Propylene Glycol	n.a.	none necessary [56]	n.a.	187.2	.13 (25)
Ethylene Glycol	n.a.	100 ppm [56]	odorless [56]	197.6	1
Diethylene Glycol	n.a.	not established [56]	n.a.	245.0	1
Neopentyl Glycol	n.a.	n.a.	n.a.	n.a.	n.a.
Dipropylene Glycol	n.a.	none necessary [56]	n.a.	231.9	1
Styrene	n.a.	100 ppm [60]	.148 ppm [46]	145.2	4.3 (15)
Methylstyrene	100 ppm = 480 mg/m^3		n.a.	n.a.	1 (17)

APPENDIX 3 (continued)
Environmental Protection Agency
EPOXY RESINS

Product	Safety: OSHA [55]	Safety: Other	Odor Threshold	Physical Data: b.p. (°C)	Physical Data: Vapor Pressure (mmHg(°C))
Bisphenol A	.5 ppm = 2.8 mg/m^3		odorless [56]	n.a.	n.a.
Epichlorohydrin	5 ppm = 19 mg/m^3		10 ppm [56]	116.1	5 (25)
Phenol	5 ppm = 19 mg/m^3		3 ppm = 12 mg/m^3 [57]	182.0	.35 (25)
Cresol	5 ppm = 22 mg/m^3		5 ppm [56]	195.0	.15 (25)
Butanol	100 ppm = 300 mg/m^3		25 ppm [56]	117.7	6.5 (25)
Glycerol	n.a.	n.a.	n.a.	290.0	n.a.
Phthalic Anhydride	2 ppm = 12 mg/m^3		choking odor [56]	284.0 sublimes	n.a.
Stearic Acid	n.a.	not toxic [56]	slight odor [56]	291.0	n.a.
Phenylene Diamine	.1 mg/m^3		n.a.	287.0	n.a.
Methanol	200 ppm = 260 mg/m^3		5,900 ppm = 7,800 mg/m^3 [57]	64.5	125 (25)

APPENDIX 3 (continued)
Environmental Protection Agency
PHENOLIC AND OTHER TAR ACID RESINS

Product	Safety: OSHA [55]	Safety: Other	Odor Threshold	Physical Data: b.p. (°C)	Physical Data: Vapor Pressure (mmHg(°C))
Phenol	5 ppm = 19 mg/m^3		3 ppm = 12 mg/m^3 [57]	182.0	.35 (25)
Formaldehyde	n.a.	5 ppm [60]	1 ppm [46]	-19.5	10 (88)
Meta Cresol	5 ppm = 22 mg/m^3		.19 ppm [59]	202.7	.15 (25)
Resorcinol	n.a.		odorless [56]	276.0	< 1
Xylenols	100 ppm = 435 mg/m3		200 ppm [56]	139.0	10 (29)
Sulfuric Acid	1 mg/m^3		n.a.	330.0	< 1
Ammonia	50 ppm = 35 mg/m^3		.037 ppm = .026 mg/m^3 [57]	-33.4	n.a.
Butanol	100 ppm = 300 mg/m^3		15 ppm [56]	117.7	6.5 (25)
Ethanol	1,000 ppm = 1,900 mg/m^3		50 ppm = 9 mg/m^3 [57]	78.4	50 (25)
Methyl Ethyl Ketone	200 ppm = 590 mg/m^3		25 ppm = 80 mg/m^3 [57]	79.6	100 (25)
Cyclohexanone	50 ppm = 200 mg/m^3		.12 ppm [46]	155.6	4.5 (25)

APPENDIX 3 (continued)
Environmental Protection Agency
AMINO RESINS

Product	Safety: OSHA[55]	Safety: Other	Odor Threshold	Physical Data: b.p. (°C)	Physical Data: Vapor Pressure (mmHg(°C))
Formaldehyde	n.a.	5 ppm [60]	1.0 ppm[46]	-19.5	10 (-88)
Aniline	5 ppm ≐ 19 mg/m^3		.23 ppm [59]	184.4	15 (77)
Benzene Sulfonamide	n.a.	n.a.	n.a.	n.a.	n.a.
Dicyandiamide	n.a.	n.a.	n.a.	decomposes	n.a.
Melamine	n.a.	nontoxic [56]	n.a.	sublimes	50 (315)
Thiourea	n.a.	n.a.	n.a.	n.a.	n.a.
p-Toluene Sulfonamide	n.a.	n.a.	n.a.	n.a.	n.a.
Urea	n.a.	n.a.	n.a.	n.a.	n.a.
Methanol	200 ppm = 260 mg/m^3		5900 ppm = 7800 m g/m^3 [57]	796.0	125 (25)
Butanol	100 ppm = 300 mg/m^3		15 ppm [56]	117.7	6.5 (25)
Octanol	n.a.	n.a.	n.a.	178.0	1
Xylene	100 ppm = 435 mg/m^3		20 ppm = 100 mg/m^3 [57]	139.0	10 (29)
Butyl Cellosolve	n.a.	100 ppm eye, nose irritation [56]	mild odor [56]	170.6	.88 (25)
Mineral Spirits	n.a.	500 ppm [56]	n.a.	150-210	n.a.

APPENDIX 3 (continued)
Environmental Protection Agency
ACRYLICS

Product	Safety: OSHA [55]	Safety: Other	Odor Threshold	Physical Data: b.p. (°C)	Physical Data: Vapor Pressure (mmHg (°C))
Ethyl Acrylate	25 ppm = 100 mg/m^3		.00024 ppm [46]	99.5	30 (20)
2-Ethylhexyl Acrylate	n.a.	n.a.	n.a.	130.0	1 (20)
Methyl Acrylate	10 ppm = 35 mg/m^3		n.a.	80.0	68 (20)
Isobutyl Acrylate	n.a.	n.a.	n.a.	n.a.	n.a.
2-Cyanoethyl Acrylate	n.a.	n.a.	n.a.	n.a.	n.a.
2- Ethoxyethyl Acrylate	n.a.	LC_{50} = 500 ppm (rat) [56]	n.a.	n.a.	n.a.
Toluene	n.a.	200 ppm olifactory fatigue [56]	.17 ppm [46]	110.6	30 (26)
Xylene	100 ppm = 435 mg/m^3		20 ppm = 100 mg/m^3 [57]	139.0	10 (29)
Ethyl acetate	400 ppm = 1,400 mg/m^3		n.a.	77.0	100 (25)
Methyl Ethyl Ketone	200 ppm = 590 mg/m^3		25 ppm = 80 mg/m^3 [57]	79.6	100 (25)
Methyl Isobutyl Ketone	100 ppm = 400 mg/m^3		ketone-like odor [56]	115.8	7.5 (25)

APPENDIX 3 (continued)
Environmental Protection Agency
COUMARONE-INDENE AND PETROLEUM RESINS

Product	Safety: OSHA[55]	Safety: Other	Odor Threshold	Physical Data: b.p. (°C)	Physical Data: Vapor Pressure (mmHg(°C))
Coumarone	n.a.	n.a.	n.a.	173.0	n.a.
Indene	10 ppm = 200 mg/m^3		n.a.	181.0	n.a.
Cyclopentadiene	75 ppm = 200 mg/m^3		n.a.	41.0	n.a.
Styrene	n.a.	100 ppm [60]	.148 [46]	145.2	4.3 (15)
Methylcyclopentadiene	n.a.	n.a.	n.a.	n.a.	n.a.
Vinyltoluene	100 ppm = 480 mg/m^3		n.a.	n.a.	n.a.
Methylindene	n.a.	n.a.	n.a.	n.a.	n.a.
Methylstyrene	100 ppm = 480 mg/m^3		n.a.	n.a.	n.a.
Xylene	100 ppm = 435 mg/m^3		20 ppm = 100 mg/m^3 [57]	139.0	10 (29)
Naphtha	100 ppm = 400 mg/m^3		n.a.	65.1	n.a.

APPENDIX 3 (continued)
Environmental Protection Agency
VINYL RESINS

Product	Safety: OSHA [55]	Safety: Other	Safety: Odor Threshold	Physical Data: b.p. (°C)	Physical Data: Vapor Pressure (mmHg (°C))
Vinyl Chloride	50 ppm = 1300 mg/m^3		slight at 4100 ppm [56]	-13.8	2580 (20)
Vinyl Acetate	n.a.	LC_{50} = 400 ppm (rat) [56]	.12 ppm [46]	73.0	115 (25)
Vinylidene Chloride	n.a.	n.a.	5000 ppm some, 1000 ppm most [56]	31.7	591 (25)
Methyl Ethyl Ketone (PVC)	200 ppm = 590 mg/m^3		25 ppm = 80 mg/m^3 [57]	79.6	100 (25)
Methanol (PVA)	200 ppm = 260 mg/m^3		5900 ppm = 7800 mg/m^3 [57]	64.5	125 (25)
Methyl Acetate (PVA)	200 ppm = 610 mg/m^3		200 ppm = 550 mg/m^3 [57]	57.0	235 (25)

APPENDIX 3 (continued)
Environmental Protection Agency
CELLULOSICS

Product	Safety: OSHA [55]	Safety: Other	Odor Threshold	Physical Data: b.p. (°C)	Physical Data: Vapor Pressure (mmHg(°C))
Acetic Acid	10 ppm = 25 mg/m^3		2.6 ppm [59]	18.1	15 (25)
Acetone	1,000 ppm = 2,4000 mg/m^3		320 ppm = 770 mg/m^3 [57]	56.1	226 (25)
Methylene Chloride	n.a.	500 ppm = 1750 mg/m^3 [60]	300 ppm [56]	40.1	440 (25)
Methanol	200 ppm = 260 mg/m^3		5,900 ppm = 7,800 mg/m^3 [57]	64.5	125 (25)
Ethanol	1,000 ppm = 1,900 mg/m^3		50 ppm = 93 mg/m^3 [57]	78.4	50 (25)
Ethyl Acetate	400 ppm = 1,400 mg/m^3		50 ppm = 180 mg/m^3 [57]	77.0	100 (25)
Dimethyl Phthalate	5 mg/m^3		aromatic [56]	282.0	<1
Diethyl Phthalate	n.a.	n.a.	aromatic [56]	296.1	<1
Nitric Acid	2 ppm = 5 mg/m^3		n.a.	86.0	n.a.
Sulfuric Acid	1 mg/m^3		n.a.	330.0	<1

APPENDIX 3 (continued)
Environmental Protection Agency
STYRENE RESINS

Product	Safety: OSHA [55]	Safety: Other	Odor Threshold	Physical Data: b.p. (°C)	Physical Data: Vapor Pressure (mmHg(°C))
Styrene	n.a.	100 ppm [60]	.148 ppm [46]	145.2	4.3 (15)
Acrylonitrile	200 ppm = 45 mg/m^3		21.4 ppm [60]	77.3	112 (25)
1,4-Butadiene	1,000 ppm = 2,200 mg/m^3		n.a.	-4.4	n.a.
Ethyl Benzene	100 ppm = 435 mg/m^3		n.a.	136.2	10 (26)
Vinyl Alcohol	n.a.	n.a.	n.a.	n.a.	n.a.
Carbon Tetrachloride	n.a.	10 ppm [60]	80 ppm [56]	76.8	113 (25)

APPENDIX 3 (continued)
Environmental Protection Agency
POLYPROPYLENE

Product	Safety: OSHA [55]	Safety: Other	Odor Threshold	Physical Data: b.p. (°C)	Physical Data: Vapor Pressure (mmHg(°C))
Propylene	n.a.	not established [56]	slightly sweet smell [56]	-103.7	large
Ethylene	n.a.	1000 ppm [56]	slightly sweet smell [56]	-47.7	large
Butane-1	n.a.	10,000 ppm - drowsiness [56]	5000 ppm [56]	-0.5	1823 (25)
n-Heptane	500 ppm = 2,000 mg/m^3		n.a	98.4	47.7 (25)
Cyclohexane	300 ppm = 1050 mg/m^3		300 ppm [56]	80.7	103 (26)
Titanium Tetrachloride	n.a.	not established [56]	n.a.	136.4	n.a.
Titanium Trichloride	n.a.	n.a.	n.a.	n.a.	n.a.
Ethanol	1,000 ppm = 1,900 mg/m^3		50 ppm = 9 mg/m^3 [57]	78.4	50 (25)
Methanol	200 ppm = 260 mg/m^3		5900 ppm = 7800 mg/m^3 [57]	64.5	6.5 (25)

APPENDIX 3 (continued)
Environmental Protection Agency
POLYETHYLENE AND COPOLYMERS

Product	Safety: OSHA[55]	Safety: Other	Odor Threshold	Physical Data: b.p. (°C)	Physical Data: Vapor Pressure (mmHg(°C))
Ethylene	n.a.	1000 ppm [56]	slightly sweet smell [56]	103.7	large
Vinyl Acetate	n.a.	LC_{50} = 4,000 (rat) inhalation [56]	.12 ppm [46]	73.0	115 (25.3)
Ethyl Acrylate	25 ppm = 100 mg/m^3		.00024 ppm [46]	99.5	30 (20)
Propylene	n.a.	not established [56]	slightly sweet smell [56]	-47.7	n.a.
1-Butene	n.a.	not established [56]	slightly sweet smell [56]	-6.3	n.a.
Isobutylene	n.a.	not established [56]	slightly sweet smell [56]	-6.3	n.a.
Titanium Tetrachloride	n.a.	not established [56]	n.a.	n.a.	n.a.
Cycloparaffins		300 ppm = 1050 mg/m^3 [60]	300 ppm [60]	80.7	1(25)
Naphtha	100 ppm = 400 mg/m^3		n.a.	65-120	5 (25)
Light Diesel Oil	n.a.	n.a.	800 ppm = 3300 mg/m^3 [57]	n.a.	n.a.

APPENDIX 3 (continued)
Environmental Protection Agency
POLYAMIDES

Product	Safety: OSHA[55]	Safety: Other	Odor Threshold	Physical Data: b.p. (°C)	Physical Data: Vapor Pressure (mmHg(°C))
Caprolactam	n.a.	n.a.	n.a.	n.a.	3 (100)
Acetic Acid	100 ppm = 25 mg/m^3		2.6 ppm [59]	118.1	15 (25)
Hexamethylene Diamine	n.a.	n.a.	n.a.	190.0	n.a.

APPENDIX 4

DEVELOPMENT OF HAZARD AND ODOR POTENTIAL INDICES

APPENDIX 4

Environmental Protection Agency

HAZARD/ODOR POTENTIAL
WORK SHEET (By Plastic)

Probable Emission	Odor Potential Factor Weight (A)	Odor Potential Rating (B)	Odor Potential Index Number (AxB)	Hazard Potential Factor Weight (C)	Hazard Potential Rating (D)	Hazard Potential Index Number (CxD)
Polyethylene (LD)						
Ethylene	.9	2	1.8	.9	1	.9
Catalyst	.1	(7)	.7	.1	(4)	.4
			2.5			1.3
Polyethylene (HD)						
Ethylene	.6	2	1.2	.6	1	.6
Cycloparaffin	.3	2	.6	.3	1	.3
Catalyst	.1	(7)	.7	.1	(4)	.4
			2.5			1.3
Vinyl Resins (PVC)						
Vinyl Chloride	.8	1	.8	.8	4	3.2
Other	.2	6	1.2	.2	4	.8
. Copolymer monomers			2.0			4.0
. Solvents						
. Catalyst						
Vinyl Resins (PVAc)						
Vinyl Acetate	1.0	8	8	1.0	4	4.0
			8			
Vinyl Resins (PVAlc)						
Methanol	.9	1	.9	.9	2	1.8
Methyl Acetate	.1	2	.2	.1	2	.2
			1.1			2.0

Foster D Snell, Inc

Probable Emission	Odor Potential Factor Weight (A)	Odor Potential Rating (B)	Odor Potential Index Number (AxB)	Hazard Potential Factor Weight (C)	Hazard Potential Rating (D)	Hazard Potential Index Number (CxD)
Polystyrene (Bulk-crystal)						
Styrene	.6	8	4.8	.6	3	1.8
Ethyl Benzene	.4	(5)	2.0	.4	3	1.2
			6.8			3.0
Polystyrene (Suspension-crystal)						
Styrene	1.0	8	8	1.0	3	3.0
			8			
Polystyrene (Impact)						
Styrene	1.0	8	8	1.0	3	3.0
			8			
Styrene Resins (ABS)						
Styrene	.6	8	4.8	.6	3	1.8
Butadiene	.3	(5)	1.5	.3	1	.3
Acrylontrile	.1	5	.5	.1	2	.2
			6.8			2.3
Polypropylene						
Propylene	.5	(1)	.5	.5	(1)	.5
Diluent	.3	2	.6	.3	2	.6
Methanol	.1	1	.1	.1	2	.2
Catalyst	.1	(7)	.7	.1	(4)	.4
			1.9			1.7
Phenolic and Other Tar Acid Resins						
Formaldehyde	.6	8	4.8	.6	6	3.6
Phenol	.2	6	1.2	.2	6	1.2
Ethanol	.1	4	.4	.1	1	.2
Butanol	.1	5	.5	.1	3	.3
			6.9			5.2

Probable Emission	Odor Potential Factor Weight (A)	Odor Potential Rating (B)	Odor Potential Index Number (AxB)	Hazard Potential Factor Weight (C)	Hazard Potential Rating (D)	Hazard Potential Index Number (CxD)
Polyesters						
Phthalic Anhydride	.9	(5)	4.5	.9	7	6.3
Styrene	.1	8	.8	.1	3	.3
			5.3			6.6
Amino Resins						
Formaldehyde	.6	8	4.8	.6	6	3.6
Butanol	.3	5	1.5	.3	3	.9
Xylene	.1	5	.5	.1	3	.3
			6.8			4.8
Alkyds						
Phthalic Anhydride	.9	(5)	4.5	.9	7	6.3
Xylene	.1	5	.5	.1	3	.3
			5.0			6.6
Acrylics						
Acrylates	.8	10	8.0	.8	5	4.0
Xylene	.1	5	.5	.1	3	.3
MEK	.1	5	.5	.1	2	.2
			9.0			4.5
Coumarone-Indene and Petroleum Resins						
Indene	.6	(8)	4.8	.6	5	3.0
Styrene	.3	8	2.4	.3	3	.9
Xylene	.1	5	.5	.1	3	.3
			7.7			4.2
Polyurethanes						
TDI	.7	8	5.6	.7	10	7.0
MDI	.2	8	1.6	.2	10	2.0
Xylene	.1	5	.5	.1	3	.3
			7.7			9.3

Probable Emission	Odor Potential Factor Weight (A)	Odor Potential Rating (B)	Odor Potential Index Number (AxB)	Hazard Potential Factor Weight (C)	Hazard Potential Rating (D)	Hazard Potential Index Number (CxD)
Cellulosics						
Acetic Acid	.6	6	3.6	.6	5	3.0
Methylene Chloride	.3	2	.6	.3	1	.3
Methanol	.1	1	.1	.1	2	.2
			4.3			3.5
Epoxy Resins						
Bisphenol A	.1	1	.1	.1	6	.6
Epichlorohydrin	.8	5	4.0	.8	6	4.8
			4.1			5.4
Polyamides						
Caprolactam	.8	(1)	.8	.8	(1)	.8
Acetic Acid	.1	6	.6	.1	3	.3
Hexamethylenediamine	.1	(1)	.1	.1	(1)	.1
			1.5			1.2

TECHNICAL REPORT DATA
(Please read Instructions on the reverse before completing)

1. REPORT NO. EPA-650/2-74-106	2.	3. RECIPIENT'S ACCESSION NO.
4. TITLE AND SUBTITLE System Analysis of Air Pollutant Emissions from the Chemical/Plastics Industry		5. REPORT DATE October 1974
		6. PERFORMING ORGANIZATION CODE
7. AUTHOR(S) Herbert Terry and Stephen Nagy		8. PERFORMING ORGANIZATION REPORT NO.
9. PERFORMING ORGANIZATION NAME AND ADDRESS Foster D. Snell, Inc. Hanover Road Florham Park, NJ 07932		10. PROGRAM ELEMENT NO. 1AB015; ROAP 21AXM-060
		11. CONTRACT/GRANT NO. 68-02-1068
12. SPONSORING AGENCY NAME AND ADDRESS EPA, Office of Research and Development NERC-RTP, Control Systems Laboratory Research Triangle Park, NC 27711		13. TYPE OF REPORT AND PERIOD COVERED Final; 3/73 – 3/74
		14. SPONSORING AGENCY CODE
15. SUPPLEMENTARY NOTES		

16. ABSTRACT

The report defines chemical/plastics industry producers, production volume, forecasted growth rates, plant capacities and locations, and average population densities at each plant site. It describes major processes in terms of equipment, reaction conditions, specific process chemicals, and general air pollution controls. A decision model was used to relate the interactions of such factors as total population exposed, production volume, growth trends, emission, odor, and hazard potential of the most likely pollutants. The report identifies polyurethanes, acrylics, and alkyds as the most likely candidates for in-depth study, estimating emissions factors and discussing emission controls and their costs. It gives similar information for some high-volume plastic materials: polyethylene, polystyrene, polypropylene, nylon, and polyvinyl chloride. Most of the pollution control devices used in the industry are associated with large volume resin manufacture and function primarily to recover product or heat values: in most instances, economics dictate against installing control devices solely for pollution control. The report gives calculated costs for various controls.

17. KEY WORDS AND DOCUMENT ANALYSIS

a. DESCRIPTORS		b. IDENTIFIERS/OPEN ENDED TERMS	c. COSATI Field/Group
Air Pollution	Cost Estimates	Air Pollution Control	13B, 14A
Plastics Industry	Acrylic Resins	Stationary Sources	11I
Chemical Plants	Alkyd Resins	Chemical/Plastics Industry	07A
Systems Analysis	Equipment		
Production Capacity	Odors	Process Chemicals	13H
Populations		Resin Manufacture	05E
Polyurethane Resins		Hazard Potential	11J

18. DISTRIBUTION STATEMENT Unlimited	19. SECURITY CLASS *(This Report)* Unclassified	21. NO. OF PAGES 293
	20. SECURITY CLASS *(This page)* Unclassified	22. PRICE

EPA Form 2220-1 (9-73)