United States
Environmental Protection
Agency

Industrial Environmental Research
Laboratory
Cincinnati OH 45268

EPA-600/2-80-108
July 1980

Research and Development

EPA

Hazardous Material Spills and Responses for Municipalities

RESEARCH REPORTING SERIES

Research reports of the Office of Research and Development, U.S. Environmental Protection Agency, have been grouped into nine series. These nine broad categories were established to facilitate further development and application of environmental technology. Elimination of traditional grouping was consciously planned to foster technology transfer and a maximum interface in related fields. The nine series are:

1. Environmental Health Effects Research
2. Environmental Protection Technology
3. Ecological Research
4. Environmental Monitoring
5. Socioeconomic Environmental Studies
6. Scientific and Technical Assessment Reports (STAR)
7. Interagency Energy-Environment Research and Development
8. "Special" Reports
9. Miscellaneous Reports

This report has been assigned to the ENVIRONMENTAL PROTECTION TECHNOLOGY series. This series describes research performed to develop and demonstrate instrumentation, equipment, and methodology to repair or prevent environmental degradation from point and non-point sources of pollution. This work provides the new or improved technology required for the control and treatment of pollution sources to meet environmental quality standards.

This document is available to the public through the National Technical Information Service, Springfield, Virginia 22161.

EPA-600/2-80-108
July 1980

HAZARDOUS MATERIAL SPILLS AND RESPONSES FOR MUNICIPALITIES

by

George A. Brinsko
Frederick J. Erny
Allegheny County Sanitary Authority
Pittsburgh, Pennsylvania 15233

and

Edward J. Martin
Andrew P. Pajak
David M. Jordan
Environmental Quality Systems, Inc.
Rockville, Maryland 20852

Grant No. S-801123

Project Officer

John E. Brugger
Oil and Hazardous Materials Spills Branch
Industrial Environmental Research Laboratory-Cincinnati
Edison, New Jersey 08817

INDUSTRIAL ENVIRONMENTAL RESEARCH LABORATORY
OFFICE OF RESEARCH AND DEVELOPMENT
U.S. ENVIRONMENTAL PROTECTION AGENCY
CINCINNATI, OHIO 45268

DISCLAIMER

This report has been reviewed by the Industrial Environmental Research Laboratory-Cincinnati, U.S. Environmental Protection Agency, and approved for publication. Approval does not signify that the contents necessarily reflect the views and policies of the U.S. Environmental Protection Agency, nor does mention of trade names or commercial products constitute endorsement or recommendation for use.

FOREWORD

When energy and material resources are extracted, processed, converted, and used, the related pollutional impacts on our environment and even on our health often require that new and increasingly more efficient pollution control methods be used. The Industrial Environmental Research Laboratory-Cincinnati (IERL-Ci) assists in developing and demonstrating new and improved methodologies that will meet these needs both efficiently and economically.

The report presents an assessment of the effect of spills of certain hazardous materials on the operation of biological wastewater treatment plants. The results of the report may be used by treatment plant operators to assess what the effects of potential hazardous material spills might be on their plants. The report may be used by wastewater collection and treatment system managers as a pattern for the development of contingency plans and approaches to mitigate the adverse effects of hazardous material spills on the consistent and effective operation of their systems. The data presented extend the understanding of the quantity and type of stored hazardous materials which represent the potential for spills in urban environments. The data may also be used to broaden the data base for planning studies and to assess possible changes in NPDES and pretreatment requirements. The results of the examination of certain hazardous materials should guide the selection of other materials for further research. Further information may be obtained by contacting the Oil and Hazardous Materials Spills Branch of IERL-Ci at Edison, New Jersey 08817.

David G. Stephan
Director
Industrial Environmental Research Laboratory
Cincinnati

ABSTRACT

Hazardous material spills are a constant threat to wastewater treatment facilities. This project deals with the Allegheny County Sanitary Authority (ALCOSAN) efforts to develop and implement a comprehensive program to minimize potential adverse effects of hazardous material spills on the ALCOSAN wastewater collection and treatment system. The principal areas reported are:

1. A compendium of the effects that hazardous materials can have on secondary biological treatment processes;

2. Inventory of hazardous materials stored within the ALCOSAN service area;

3. Evaluation of selected hazardous materials in a pilot plant simulating the effects of hazardous material spills on treatment plant performance;

4. Study of the potential for a monitoring and surveillance system at the head-end of the plant and key locations within the collection system;

5. Development of a contingency plan to initiate countermeasures in the event of a hazardous material spill;

6. Investigation of surcharge, financing, and legislative programs.

The pilot plant results showed that the hazardous materials tested had adverse effects on the plant operation, but that these effects were not sufficient to damage the plant process. Operational problems and degradation of effluent quality illustrate the potential adverse effects of hazardous materials on the operation of the full-scale facility.

This report was submitted in fulfillment of EPA Grant No. S-801123 to the Allegheny County Sanitary Authority, Pittsburgh, Pennsylvania. The report was prepared in part by a subcontractor, Environmental Quality Systems, Inc., Rockville, Maryland. The report covers the period March 1972 to January 1975. Corrections to the final report were completed in December 1977.

CONTENTS

Foreword iii
Abstract iv
Figures vii
Tables. ix
Acknowledgments. xiii
I Introduction. 1
II Conclusions 4
III Recommendations. 7
IV Review of Existing Information. 9
V Inventory of Hazardous Materials and Identification of Industrial Discharges. 26
VI Pilot Plant Evaluations 38
VII Monitoring and Surveillance System 80
VIII Contingency Plans 88
IX Spill Countermeasures. 94
X Discussion and Summary 110

Appendices

A. Summary of Literature Review on Effect of Hazardous Material Spills on Biological Treatment Processes 112
B. Checklist for ALCOSAN Personal Interviews 129
C. Manufacturing Industries with Greater Than 50 Employees in the ALCOSAN Service Area 130
D. Survey Questionnaire, Cover Letter, and Questionnaire Input Data Card Format. 146
E. Stored Hazardous Materials Reported Through Questionnaires 162
F. Pilot Plant Hazardous Materials Spills Studies 170
G. Description of Volume 2 195

CONTENTS (Continued)

H. Completion Report on Mass Balance Study 196

I. Diversion Structure Data 228

J. Surcharge, Financing and Legislation 247

K. Additional Data on Pilot Plant Studies 254

L. Glossary of Abbreviations and Conversion Table - Metric to U.S. Measure 265

References 266

FIGURES

Number		Page
1	Step Aeration Pilot Plant Schematic	44
2	Base Line BOD Least Squares Fit Curve	46
3	Effluent Cadmium	64
4	Effect on BOD Removal (Copper)	67
5	Effect on Effluent Copper Concentration	68
6	Total Copper in the Sludge	69
7	Effect on Effluent pH	72
8	Effect on COD Removal, Sulfuric Acid Spill and Hydrogen Peroxide Spill	73
9	COD Reduction, Methanol Spill and Phenol Spill	76
10	ALCOSAN Service Area Map	81
11	Monitoring System	82
12	Contingency Plan Outline	89
13	Schematic of Existing ALCOSAN Plant	95
14A-G	Countermeasures for the ALCOSAN Treatment Plant	105
F-1	BOD Removal vs. Time Spill: 500 mg/l Phenol	175
F-2	COD Removal vs. Time Spill: 500 mg/l Phenol	176
F-3	BOD Removal vs. Time Spill: 500 mg/l NH_4Cl	179
F-4	BOD Removal vs. Time Spill: Unneutralized Scrubber Water	182

FIGURES (Continued)

Number		Page
F-5	BOD Removal vs. Time Spill: H_2SO_4 Pickle Liquor	185
F-6	BOD Removal vs. Time Spill: No. 2 Fuel Oil	189
F-7	COD Removal vs. Time Spill: No. 2 Fuel Oil	190
F-8	Turbidity Removal vs. Time Spill: No. 2 Fuel Oil	191
F-9	SS Removal vs. Time Spill: Perchloroethylene	194
H-1	Flow Chart of Primary Plant and Pilot Plant Locating the Sampling Sites	198
H-2	Main Pump Station Wet Well Schematic Location of Influent Interceptors	199
H-3a	Interceptor Flow, Sunday, April 15, 1973	208
H-3b	Interceptor Flow, Monday, April 16, 1973	209
H-4	Influent and Effluent BOD-5	210
H-5	pH vs. Time; Sites 5 and PP1 (Mass Balance Study)	215
H-6	Solids Balance - Primary Plant	217
H-7	Solids Balance - Pilot Plant	220
I-1	ALCOSAN Service Area Sewerage Basins Outside City Limits	245
I-2	ALCOSAN Sewerage Basins Within City Limits	246

TABLES

Number		Page
1	Pollutant Parameters for Which Continuous Analyzer/Controller Equipment Is Available	14
2	Heavy Metals in Wastewater Treatment Plant Influent and Effluent - Cadmium	19
3	Heavy Metals in Wastewater Treatment Plant Influent and Effluent - Chromium	20
4	Heavy Metals in Wastewater Treatment Plant Influent and Effluent - Copper	21
5	Heavy Metals in Wastewater Treatment Plant Influent and Effluent - Lead	22
6	Heavy Metals in Wastewater Treatment Plant Influent and Effluent - Nickel	23
7	Heavy Metals in Wastewater Treatment Plant Influent and Effluent - Zinc	24
8	Summary of Major Manufacturing Industrial Categories within ALCOSAN Service Area	28
9	Data Processing Report Format	32
10	Ten Largest Industrial Classifications Discharging to the ALCOSAN System by Wastewater Flow	33
11	Stored Hazardous Materials Reported through Questionnaires	34
12	Potential Candidates for Hazardous Material Studies	43
13	Summary of Pilot Plant Hazardous Material Studies (HMS)	57
14	Pilot Plant Operating Conditions	62
15	Influent and Effluent Cadmium Data Study 1-1	65

TABLES (continued)

Number		Page
16	Influent and Effluent Total Cadmium Data Study 1-2	66
17	BOD and Total Copper Data	70
18	Uptake of Copper by Activated Sludge	71
19	pH and COD Data Study 2-2, Sulfuric Acid	74
20	pH and COD Data Study 3-1, Sodium Hydroxide	75
21	COD Data Study 4-1 and 5-1, Methanol and Phenol	77
22	Field Monitoring Station Data	84
23	Hazardous Material Spill Report Checklist	91
24	Allegheny County Sanitary Authority 1974 Operating Summary	97
25	Ratio of Average Total Metal Concentrations	100
26	Spill Countermeasures	103
A-1	Summary of Literature Review on Effect of Hazardous Material Spills on Biological Treatment Processes	112
B-1	Checklist for ALCOSAN Personal Interviews	129
C-1	Manufacturing Industries with Greater Than 50 Employees in the ALCOSAN Service Area	130
C-2	Average Discharge Quantity and Quality for the Ten Standard Industrial Classifications with the Largest Flow to the ALCOSAN System	144
C-3	Largest Dischargers of Various Wastewater Quality Parameters	145

TABLES (continued)

Number		Page
D-1	Questionnaire Input Data Card Format.	159
E-1	Stored Hazardous Materials Reported Through Questionnaires	162
F-1	Summary of Pilot Plant Studies.	170
F-2	BOD and COD Removal - Phenol	174
F-3	BOD Removal - Ammonium Chloride	178
F-4	BOD Removal - Unneutralized Scrubber Water.	181
F-5	BOD Removal - H_2SO_4 Pickle Liquor.	184
F-6	BOD and COD Removal - No. 2 Fuel Oil.	187
F-7	Suspended Solids Removal - Perchloroethylene	193
H-1	Influent Flow Record	205
H-2	Summary of Sewage Quantities for Intercepting Sewer (Gallons Per Day)	206
H-3	Interceptor System Flow Data (Million Gallons Per Day). .	207
H-4	In-Plant Stream Flows.	212
H-5	Total Metals Balance, Primary Treatment Plant - April 15 and 16, 1973.	222
I-1	Diversion Structure Data.	228
K-1	Wastewater Characteristics During Pilot Plant Studies	254
K-2	Cadmium (100 mg/l)	255
K-3	Cadmium (500 mg/l)	256

TABLES (continued)

Number		Page
K-4	Sulfuric Acid	257
K-5	Sodium Hydroxide	258
K-6	Methanol	259
K-7	Phenol (500 mg/l)	260
K-8	Phenol (600 mg/l)	261
K-9	Ammonium Chloride	262
K-10	Copper	263
K-11	Pickle Liquor	264
K-12	Fuel Oil	265
K-13	Perchloroethylene	266

ACKNOWLEDGMENTS

During the course of the project, the Allegheny County Sanitary Authority (ALCOSAN) Laboratory staff, headed by Ms. Mary Anne Gearing, performed tens of thousands of chemical analyses. The contributions of Mr. Willard Jefferson were very helpful during this analysis effort.

Mr Frank Hensler and Mr. Robert Smith, along with other staff members of the ALCOSAN plant, provided continuous significant project support.

The Project Officer, Dr. John Brugger, U.S. Environmental Protection Agency, Edison, New Jersey, provided a sustained effort toward project technical analysis and review. The assistance of Mrs. Allison Tepper is also appreciated.

The efforts of the consultant, Dr. James Miller of the University of Pittsburgh, are appreciated.

The ALCOSAN also acknowledges the efforts of the staff and the cooperation of the various departments of the government of Allegheny County and the City of Pittsburgh, Pennsylvania, during the course of the study.

Finally, the assistance provided by Universal Technology Corporation, Dayton, Ohio in graphics layout and editorial format is recognized. The efforts of Ms. Anne Hemmelgarn and Mr. Thomas DeBanto are worthy of special mention during this final report preparation activity.

SECTION I

INTRODUCTION

BACKGROUND

The initial problems of defining and identifying hazardous materials, assessing the potential for hazardous material spill incidents, and determining the effects of spills primarily to surface waters have been the focus of many reports. Based on these efforts, criteria for defining hazardous materials, classifications and lists of hazardous materials, and contingency plans for reacting to hazardous material spills have been developed. However, little information has been presented on the effects that spilled hazardous materials have on municipal wastewater treatment systems, especially those employing biological treatment processes. Even though these facilities generally discharge to surface waters, protection of their efficient operation has not been an element of most oil and hazardous materials spill contingency plans. This report considers the role of wastewater treatment plants in the overall management of hazardous material spills.

The concern over hazardous materials can be measured in regulations set forth by the Water Quality Improvement Act of 1970, the Federal Water Pollution Control Act Amendments of 1972, the Hazardous Materials Transportation Control Act of 1970, and the Toxic Substances Bill of 1972. As required in Section 311 of FWPCAA of 1972, a list enumerating 300 hazardous substances recently has been drafted by the EPA.

More than 2 billion tons of hazardous materials are produced and transported annually in the United States. Approximately 8.6 million tons of hazardous materials were moved on the Allegheny River and the improved portion of the Ohio River in Pennsylvania during 1968, enough to rank the area as one of the largest handlers of hazardous materials in the country (Ref. 1). On a national basis, during 1973, 7,651 oil and hazardous material spills were reported to the United States Department of Transportation, Office of Hazardous Materials (DOT) (Ref. 2). For that same period, only 44 hazardous materials incidents were reported in Allegheny County, Pennsylvania, by the DOT and the EPA (Ref. 3).

When hazardous material spill incidents occur during transportation, cleanup often involves the flushing of the spilled material into nearby sewers. This practice coupled with the detrimental effects reported by studies of the effects of hazardous materials on biological activity are the basis for concern by wastewater treatment plant operators.

The step aeration activated sludge process is utilized by ALCOSAN for secondary treatment. The sewer system is primarily a combined system, serving two-thirds of the county, including the entire city of Pittsburgh, Pennsylvania.

ORIGINAL STUDY PLAN

The comprehensive program being developed by ALCOSAN for managing hazardous material spills is directed towards minimizing the potential adverse effects on the wastewater collection and treatment system of hazardous materials spills. The following seven elements were considered essential in the development of this comprehensive program.

1. A review of literature to assess the magnitude of the hazardous material spill control problem was conducted. This included determining the effect of hazardous materials on biological treatment processes; identifying the potential sources of hazardous materials; and reviewing methods of responding to, controlling, and monitoring hazardous materials spills in municipal systems.

2. On the local level an inventory of the sources of hazardous materials was prepared. The inventory data were generated through questionnaires and personal surveying and sampling programs. All data were organized, sorted, and retreived by computer with various sort permutations utilized to display the data. Industrial discharge data were generated and manipulated in a similar manner. The primary data displays were arranged by Standard Industrial Classification number (SIC) and location where the industrial discharge enters the ALCOSAN System (i.e., sewer drainage basin).

3. The sensitivity of the biological treatment processes to changes in influent wastewater characteristics, as demonstrated in laboratory- and bench-scale units by other studies, was reviewed. Few large-scale plant studies were reported. After reviewing the effects of hazardous materials on biological treatment processes and concurrent with developing the inventory, hazardous materials were selected for pilot plant evaluations. In the pilot plant studies, spills of single compounds and combinations of materials were generated and the effects on the activated sludge process were monitored. Possible countermeasures for mitigating the effects of the spills also were evaluated.

4. Activation of countermeasures is dependent on an early warning of detrimental influent wastewater characteristics. To provide this capability at ALCOSAN, a monitoring system was designed that consists of five remote stations located at key sites in the interceptor system and a station at the head end of the treatment plant. Several potential reactions are possible when atypical wastewater conditions are detected. These range from activating additional treatment processes or modifying ongoing processes to mitigate the effects of a spill, to expanding the sampling efforts to better document the effects caused by the atypical influent.

5. An operations reaction plan as briefly described above is one part of a two-part contingency plan. One facet is an internal plan for ALCOSAN, and the other is intended to insure that plant personnel are alerted in the event that a material spill enters the sewerage system. The internal plan was formulated, delineating actions and responsibilities when a spill incident is detected by monitors or reported by other means.

6. The operations plan recommending possible countermeasures and operational modifications was developed to protect treatment plant personnel and facilities, to eliminate inhibition of microbial activity in the secondary units, and to maintain effluent quality consistent with requirements. Structural and nonstructural alternatives are recommended to handle various spilled materials.

7. To recover the costs of the implementation of this comprehensive plan, bases for equitably distributing the cost to the users of the service that ALCOSAN provides were devised. The legislation required to activate the plan was considered.

SECTION II

CONCLUSIONS

The following are conclusions of the project effort.

1. A literature review indicated that hazardous material spills do have an effect on the efficient operation of biological wastewater treatment facilities. This effect may be severe and long term.

2. The inventory of hazardous materials revealed that materials shown to detrimentally affect biological processes were stored within the service area of the ALCOSAN treatment facility and there existed a potential for spills of these materials and subsequent effects on the collection system, treatment plant, and plant personnel.

3. There is substantial variability between plants in terms of removal capability for any particular heavy metal.

4. In many cases, there is more than an order of magnitude variation in the influent heavy metals concentrations for the various plants.

5. Inspection of the raw data reveals that industrial contributions can account, in large part, for many of the wide variations in treatment plant influent concentrations.

6. The pilot plant evaluation of the effects of hazardous material spills illustrated that, under the conditions of the study and for the materials evaluated, there were minimal overall effects on the activated sludge process. Though the plant remained operable, the effluent quality was degraded, however. This degradation was due largely to the spilled materials not being removed in the plant and being present in the effluent. No long-term deleterious effects were observed for the materials and spill conditions studied, even though during the period of study, the ALCOSAN plant did experience plant upsets, probably due to unknown quantities or types of spills, or unfavorable operating conditions or a combination of the two.

7. There is a disagreement between the pilot plant studies of hazardous material spills and the information presented in the literature for the same materials. The literature results which were reviewed and reported (Ref. 4) were largely conducted at the laboratory-scale. The pilot-scale facility is apparently able to handle considerable quantities of hazardous materials without long-term effects on the operation.

There are two possible significant outcomes of a hazardous material spill. A plant upset is possible and/or the contents of the spill may be discharged in the plant effluent and could constitute permit violations (National Pollutant Discharge Elimination System, NPDES).

8. A monitoring and surveillance system will provide continuous documentation of the variations in influent character which will result from certain hazardous material spills. The monitoring and surveillance system will provide an indication of the type of spill which has occurred, and based on the location of the sensing apparatus, the time of the spill's arrival at the plant can be estimated. The monitoring and surveillance system will assist in implementing spill countermeasures at the plant or in the collection system. The system will also assist in enabling ALCOSAN to meet NPDES permit requirements.

9. Of the six heavy metals investigated, a very rough approximation of secondary plant removal is as follows: lead has the best removal characteristics, followed by cadmium, chromium, copper, and zinc which are about the same; and nickel is the most poorly removed. The exact removal ranges cannot be estimated because of the wide variability not only among plants, but also within the same plant.

10. Based on the data available, the cause of the variability in removal cannot be pinpointed, such as plant operating conditions, influent concentration, or other factors.

11. Local emergency response agencies (police and fire departments) often involved with controlling a hazardous material spill generally are not aware of the function and responsibility of the wastewater treatment agency. The emergency agencies have only recently become aware of the ramifications of flushing spilled materials into the nearest sewer.

12. The only structural in-plant operational modification that might be implemented at ALCOSAN would be neutralization of acid or alkaline materials until further documentation of the effects of the hazardous materials on wastewater treatment plants are established.

13. In some instances, especially for organic materials (e.g., phenol), adjusting treatment plant operating procedures may be sufficient to preserve treatment plant integrity and reduce the quantity of hazardous material discharged from the treatment plant if an early warning of the imminent slug dose is received.

14. Out-of-sewer devices for control or containment of spilled hazardous materials are still largely in the development phase, with several devices currently being tested. Portable foam generating systems for constructing dikes have general applicability for prohibiting movement of spilled materials into sewers.

15. Availability of in-sewer spill control devices is limited, with inflatable pipe stoppers normally used for sewer maintenance most readily available.

16. Although continuous monitoring instrumentation is available, costs, required maintenance, constraints of the operating environment and difficulties in data interpretation have made the use of this instrumentation limited. The parameters generally monitored are dissolved oxygen, temperature, pH, conductivity, oxidation-reduction potential, and turbidity.

SECTION III

RECOMMENDATIONS

This program was concerned with the protection of municipal wastewater treatment facilities from spills of hazardous materials. The FWPCAA of 1972 (Ref. 37) states that "It is the national policy that the discharge of toxic pollutants in toxic amounts be prohibited." To assist in achieving this objective, the following recommendations are made. They are of both national and local significance.

1. A contingency plan should be developed for each wastewater treatment facility and should include documentation of hazardous materials spills and their effects. The information developed in the pilot-scale facility related to spill effects and the existing information on the full-scale facility at ALCOSAN does not warrant implementing structural in-plant modifications for spills until hazardous material effects have been better established.

2. The effects of hazardous materials spills on biological treatment systems should continue to be investigated, preferably at the pilot-plant scale or full scale. Although the pilot plant was not affected severely by the materials and conditions studied, the full-scale plant has appeared to perform less efficiently at times, even though operating conditions were not modified. In addition, atypical influent wastewater has been observed visually from time to time, but effects, if any, have not been documented. The following spills situations should be examined: (a) Spills of different hazardous materials in sequence; (b) Combinations of different materials in the same spill; (c) Long-term chronic spills; and (d) Buildup of toxic substances in the activated sludge over extended periods of time.

3. Industrial discharge sampling programs are recommended for collection and treatment systems located in heavily industrialized areas for continuous maintenance of satisfactory secondary plant operating performance and effluent quality, determining potential future spill conditions, and enforcement of municipal codes. The program should be operated to guarantee sampling at the most pertinent establishments and should employ portable automatic sampling equipment to insure accurate representation of industrial discharge quality.

4. A monitoring and surveillance system should be installed at critical points in the collection system and at the head end of treatment plants to facilitate activation of spill contingency plans.

5. Emergency response agencies (e.g., police, fire) should be trained to handle hazardous materials spills and be informed of the alternatives for handling spills and the ramifications of these alternatives with regard to wastewater collection and treatment systems.

6. Wastewater treatment agencies should participate with other local agencies to develop a hazardous materials spill contingency plan. The magnitude and potential of the hazardous materials spill problem should be determined. Organized efforts by the local agencies to document spill incidents should be a part of a contingency plan.

7. If an evaluation of the hazardous material slug dose situations presented in Section VI demonstrates effects on treatment processes, the feasibility of short-term countermeasures to mitigate the effects should be examined. Limited experience in the pilot plant demonstrated some success in mitigating spill effects when plant operation was modified. Possible alternatives include increasing retention time, increasing the biomass concentration, and wasting contaminated sludge to the sludge treatment system.

8. The potential for spills of hazardous materials should be determined through an inventory of hazardous materials stored within the treatment plant service area. The inventory should be updated regularly. This may be done in conjunction with personal survey interviews, which should be conducted before or during initiation of industry discharge sampling.

9. The effects of the pilot plant results on the FWPCAA of 1972 (Ref. 39), especially sections 304 and 307 related to effluent limitation guidelines, pretreatment standard guidelines, and toxic and pretreatment effluent standards, should be further examined by EPA. The effects of short-term spills on secondary wastewater treatment plant operating efficiency appears to be less severe than indicated by results in the literature for equivalent treatment systems at various scales (bench and pilot).

10. The hazardous material content of resultant activated sludge after spills or chronic discharges of non-domestic wastes and the additional costs incurred for disposal of residues containing concentrated hazardous materials should be further investigated.

SECTION IV

REVIEW OF EXISTING INFORMATION

Existing information critical to the formulation of a comprehensive program for the control of hazardous material spills was examined in some detail. This information is summarized into the following three categories:

1. The scope and nature of effects on biological treatment processes which may be expected for a broad variety of hazardous materials.

2. The extent of previous work on the control of hazardous material spills.

3. The probability and magnitude of hazardous material spills into the municipal sewerage system.

EFFECTS OF HAZARDOUS MATERIALS ON BIOLOGICAL PROCESSES

One of the major goals of this demonstration project was to minimize the adverse effects hazardous materials (HM) have on the performance of secondary biological treatment processes. To provide an indication of such potential effects, a literature search was conducted to identify previous work related to effects of hazardous materials on biological treatment systems and to guide this work.

An initial cursory search identified approximately 2000 sources pertaining to materials of potential interest. Subsequently, over 1000 abstracts from these initial sources which appear to be relevant to the study of hazardous material effects were examined. Of these, approximately 500 articles were reviewed in depth and about 100 literature references were used.

The references used present a considerable amount of pertinent information. A concise compendium of these data, entitled "Effects of Hazardous Material Spills on Biological Treatment Processes" has been prepared as a separate report (Ref. 4). It is intended to be utilized by wastewater treatment plant operators as a handbook for quick reference in assessing a range of potential adverse effects on the biological phase of the treatment process. Effects of over 250 chemical substances are presented. Information, arranged in a matrix form with the chemical substances presented in alphabetical order, includes:

1. Description of the chemical.

2. Effects on treatment process operating parameters, especially those associated with the activated sludge treatment process.

3. Effect of the treatment process on the chemical.

Data from the full scale, pilot scale, and bench scale studies are reported with an extensive bibliography. Appendix A, Table A-1 presents a brief alphabetized summary of the data in the handbook and it, by itself, may be used as a quick reference handbook. In the literature, biological treatment processes have been shown to be sensitive to slug doses of a broad variety of materials although it is difficult to generalize.

CONTROL OF HAZARDOUS MATERIAL SPILLS

Considerable work has been done in the area of controlling hazardous material spills on land and in water. Efforts range from design of physical systems to contain, treat, and clean up the spilled materials to development of contingency plans outlining actions and responsibilities of agencies to control spill incidents. Equipment being developed and tested for containment, treatment, and clean up of land spills includes:

1. Plastic polyurethene foam plugs and foam concrete dikes which can be dispensed from portable foam generating units (Ref. 5, 6).

2. A portable, self-contained pump and collection bag module to collect spilled materials which have temporarily been contained (Ref. 7).

3. Mobile full-scale physical-chemical treatment systems to treat hazardous materials in aqueous solutions (Ref. 8, 9). However, much of this equipment is still in the developmental stages.

Numerous contingency plans exist for coordinating the response to hazardous material spills; yet the major elements or roles of any contingency plan may be classified as:

1. Spill detection and reporting.

2. Response, i.e., containment and clean up.

3. Legal authority and financial responsibility.

While the Commonwealth of Pennsylvania currently is developing a formal contingency plan, present contingency plans on the national (Ref. 10), regional (Ref. 11), and subregional (Ref. 12) levels consider and provide for these major elements, but, out of necessity, except for legal authority, provide only a management system and an outline of response actions. The stated purpose and objectives of the EPA Region III plan (Region III

headquarters are in Philadelphia and include the Commonwealth of Pennsylvania) are to provide for:

1. A pattern of coordinated integrated response to pollution spills by departments and agencies of the Federal government, state and local governments, and private groups. It establishes a regional response team and provides guidelines for establishment of sub-regional contingency plans. This plan also promotes the coordination and direction of Federal, state, and local response systems and encourages development of local government and private capabilities to handle spills.

2. Efficient, coordinated, and effective action to minimize the damage from oil and hazardous substance discharges, including containment, dispersal, and/or removal.

These plans are concerned almost entirely with controlling effects on surface waters and do not deal with response requirements to spills affecting wastewater collection systems. A past weakness of current and previous plans -- the absence of a comprehensive information system -- has been strengthened with the development of the EPA Oil and Hazardous Material Technical Assistance Data System (OHMTADS) and the Coast Guard Chemical Hazards Response Information System (CHRIS) in addition to the Manufacturing Chemists Association (MCA) CHEMTREC Program. Contingency plans formulated by individual industries (Ref. 13, 14) and industrial cooperatives (Ref. 15) address themselves to specific responses for special hazardous materials.

In the Pittsburgh area, at the local level, there is no contingency plan and little has been done to assist the local emergency response agencies, that is, the police and firemen. It was concluded from meetings with these agencies that:

1. Local police and fire agencies do not have a well-defined plan nor do they participate in a communications alert network in the event of a spill incident.

2. Local police and fire agencies are not aware of the functions or the responsibilities of ALCOSAN nor of the possible effects of a hazardous material spill on treatment plant performance.

3. Fire agencies consult literature published by the National Fire Prevention Agency, MCA and the Railway System and Management Association for descriptions of the proper use of hazardous substances and the necessary safety precautions and incident control procedures. The aid of the Chemical Transportation Emergency Center (CHEMTREC) may also be enlisted. However, spilled materials are often flushed into the nearest sewer or waterway. Communication regarding spill incidents between local, state and federal agencies was lacking.

4. Although industries are required to file a "Pollution Incident Prevention Plan" with the Pennsylvania Department of Environmental Resources containing a contingency plan, recent spill incidents within Allegheny County indicated that such plans do not necessarily function in an emergency.

5. The county has no hazardous material contingency plan and almost no record of spill incidents, though it is estimated that 500-1000 spills of oil and hazardous materials occur annually in Allegheny County.

6. Local agencies have no record of spill incidents and individuals were able to recall very few incidents regarding hazardous materials.

Local agencies usually are first on the scene of a land spill and early steps taken by them will determine the magnitude of the spill control problem. However, except for the local treatment systems, equipment for spill containment is still in the development stage and not widely available. The actions of these agencies generally will be of a first-aid nature with more sophisticated activities remaining the responsibility of experts representing the Federal and state governments, manufacturers of the spilled material, or the agent responsible for transporting or storing the material. The first-aid actions, although primarily concerned with protection of human life, should stress containment of the spilled material to prevent both horizontal and vertical movement. There are several means of containment including:

1. Changing position of the ruptured container.

2. Repairing or rebuilding the container.

3. Building a substitute container.

4. Enclosing the container.

A substitute container may be made by:

1. Forming dikes from earth, sand bags, or inflatable water bags.

2. Erecting portable containers such as swimming pools.

3. Digging a pit or sump, preferably lined.

Stainless steel overpacking containers are being built by a major chemical company for enclosing leaking 55-gallon drums (Ref. 16).

When sewer drains present an avenue for continued spreading of the spilled material, they should be blocked. In the absence of high-expansion foam systems, materials at hand should be used for form dikes. In-sewer means of control, available at most wastewater treatment facilities, include

inflatable balls, "pipestoppers", or dams usually used in sewer maintenance. An assessment of spill control mechanisms including contingency plans specific to the ALCOSAN service area will be discussed later in this report.

The control of spills is dependent upon detecting the spill, identifying the pollutant, monitoring the progress of the pollutant, and utilizing clean-up techniques. The best means of identifying atypical conditions in an aquatic environment where the magnitude and potential of the spill and the possible effects of a spill warrant monitoring is by continuous monitoring systems. Spot-checks including laboratory and field tests generally are unsatisfactory for protection purposes but are suitable for identifying and monitoring the progress of the spills. While inadequate for the detection of hazardous material spills, an example of a continuous monitoring system in use is the ORSANCO Robot Monitoring System (Ref. 17). This system measures dissolved oxygen, pH, oxidation and reduction potential, conductivity, chloride concentration and temperature. Table 1 presents those pollution parameters for which continuous automatic analysis equipment is available; however, this automatic equipment is costly to maintain, often complex to operate, and data are difficult to interpret. A monitoring and surveillance system, specific for the operating conditions at ALCOSAN, will be discussed later in this report.

SPILLS INTO THE MUNICIPAL SEWER SYSTEM

The United States Department of Transportation records the following commodities involving spilled incidents in Allegheny County in the period January 1971 to March 1973:

1. gasoline -- 23 spills
2. paint, enamel, lacquer -- 7 spills
3. cleaning compounds -- 4 spills
4. alcohol -- 3 spills
5. methanol -- 2 spills
6. pyridine -- 2 spills
7. acetone -- 1 spill
8. ammonium nitrate -- 1 spill
9. battery contents -- 1 spill
10. butadiene -- 1 spill
11. corrosive liquid -- 1 spill
12. electrolyte (acid) -- 1 spill

TABLE 1

POLLUTANT PARAMETERS FOR WHICH CONTINUOUS ANALYZER/CONTROLLER EQUIPMENT IS AVAILABLE

Acidity	Hardness
Alkalinity	Hydrazine
Amines	Hydrogen Sulfide
Ammonia	Iron (ferrous and ferric)
Ammonia Nitrogen	Manganese
Bromine	Nickel
Chloride (photometric method)	Nitrate
Chlorine (free)	Nitrite
Chlorine (residual and total)	Oxidation Reduction Potential
Chromate	Ozone
Chromium (hexavalent, trivalent, and total)	pH
Color	Phosphates (ortho, poly, total)
Conductivity	Silica
Copper	Silver
Cyanide	Sulphite
Dissolved Oxygen	Tannin and Lignin
Fluoride	Temperature
	Turbidity

13. fuming sulfuric acid -- 1 spill

14. inflammable liquids -- 1 spill

15. liquid acids -- 1 spill

16. liquid cement -- 1 spill

17. oxidizing materials -- 1 spill

18. phosphorus oxychloride -- 1 spill

19. potassium cyanide -- 1 spill

20. pyrophoric liquids -- 1 spill

21. sodium cyanide -- 1 spill

22. sodium hydrosulfite -- 1 spill

23. titanium tetrachloride -- 1 spill

The fate of these materials is unknown. There is no direct tie to plant upsets in the ALCOSAN system or elsewhere. It is unlikely that this is a complete list of all spills; as indicated earlier, local emergency agencies have no record of spill incidents. ALCOSAN has documented a few spill incidents which were reported to them; these generally involved gasoline and asphalt.

Once spilled materials enter the collection system, there are several potential effects:

1. Operating personnel may be endangered or the interceptor system or plant facilities may be damaged.

2. Material may pass through the treatment plant unaltered and be discharged to the receiving water.

3. Biological treatment processes may remove or reduce the quantity of spilled materials entering the receiving stream, or

4. Biological treatment processes may be upset and in the time required to re-establish maximum efficiency poorly treated wastewater will be discharged.

The effect will be a function of the type of spilled material, the quantity, contingency reactions, and types of treatment processes.

Both the Ohio River Valley Sanitary Commission (ORSANCO) and the State of Pennsylvania have established pollution control standards and water quality criteria for the Ohio River. The most recent ORSANCO standards, numbered 1-70 and 2-70, were adopted in November 1970 and applied to essentially all sewage and industrial waste discharged to the Ohio River (Ref. 18). The State of Pennsylvania likewise has established the general and specific water quality criteria to protect the water users of its streams. The following general criteria have been adopted:

> The water shall not contain substances attributable to municipal, industrial, or other waste discharges in concentrations or amounts sufficient to be inimical or harmful to the water uses to be protected or to human, animal, plant or aquatic life. Specific substances to be controlled include, but are not limited to, floating debris, oil, scum, and other floating materials; toxic substances; substances that produce color, taste, odors, or settle to form sludge deposits.

On September 30 and October 1, 1971, the Environmental Protection Agency convened a conference in Pittsburgh on the matter of pollution of the interstate waters of the Ohio River and its tributaries in the Pittsburgh, Pennsylvania area involving Pennsylvania, Ohio, and West Virginia (Ref. 19). Some of the recommendations presented in the report relate specifically to ALCOSAN discharges to the Ohio River. Of particular interest were the following recommendations:

1. The Allegheny County Sanitary Authority's treatment plant at Pittsburgh provide, as a minimum, a 90% reduction of both suspended solids and oxygen demanding materials throughout the year. The rate of discharge by this plant shall not exceed BOD_5 load of 20,000 lbs. per day and suspended solids load of 40,000 lbs. per day.

2. Wastewater discharge into the Ohio River and its tributaries of Pennsylvania from municipal and industrial sources:

   a. shall not show irridescence nor contain more than 10 mg/l of total oil.

   b. shall not contain amounts of the following substances that will cause the concentration of the receiving stream to exceed the acceptable level as specified in the recent edition of the United States Public Health Service Drinking Water Standards (Ref. 38).

Arsenic	Lead
Barium	Phenols
Cadmium	Selenium
Copper	Silver
Chromium, hexavalent	Zinc

c. shall not contain amounts of ammonia that will cause the concentration of ammonia in the receiving stream to exceed 0.5 mg/l of ammonia as nitrogen (N).

d. shall not contain amounts of cyanides that will cause the concentration of cyanides in the receiving stream to exceed 0.025 mg/l.

3. Wastewaters from industrial and municipal sources that discharge to the Ohio River or its tributaries in Pennsylvania shall not contain more than 7.0 mg/l of total iron nor 1.0 mg/l of manganese.

4. Wastewaters from industrial and municipal sources that discharge to the Ohio River and its tributaries in Pennsylvania shall not contain material in such quantities or concentrations or are toxic or harmful to aquatic life. Wastewaters are considered toxic if over half of the test organisms are fatalities in a 96-hour bioassay.

5. All municipal and industrial waste sources in the conference area have the required treatment facilities completed and in operation by December 1973, except where completion is required earlier by the federally approved water quality standards. Interim dates for all waste sources in the conference area are to be submitted to the conference chairman within three months.

6. Concentrations of all materials shall be determined according to the procedures outlined in the latest edition of Standard Methods (Ref. 20).

In order to assess expected continuous toxic metal loadings of hazardous materials to wastewater treatment facilities several industrial waste studies were reviewed. An extensive industrial waste study was conducted in Cleveland, Ohio (Ref. 21). This study included an industrial waste inventory, a detailed river and lake study, an evaluation of Lake Erie water quality and water quality standards, and detailed analysis of pretreatment requirements. An analysis of the measures necessary to meet assigned and recommended water quality criteria and an overview of the operation of the Southerly Wastewater Pollution Control Center are presented in addition to a rationale for an equitable sewer use charge, findings and recommendations concerning the financial procedures employed for the City of Cleveland and sample rate and use ordinances.

An engineering study of the Chicago wastewater treatment system was conducted to indicate the importance of SIC categories in establishing surcharge levels (Ref. 22). Data summary for the eight categories of meat packing, sausage processing, poultry processing, dairies, bakeries, laundries, laundromats, and car washes indicated that they represented one-third of the industrial BOD load and about 2% of the flow, based on the total non-residential loading to the Chicago metropolitan areas sewage treatment plants. The report indicated that bakeries contributed the largest fraction of BOD, with meat packing second, and laundry establishments third.

In order to obtain an estimate of the magnitude of heavy metals loading to, and emanating from, wastewater treatment plants in large metropolitan areas, sixteen major treatment facilities were investigated. Twelve of these facilities were in the City of New York, three were in Cleveland, and the remaining facility was that operated by the Allegheny County Sanitary Authority in Pittsburgh.

The heavy metals chosen for study were: cadmium, chromium, copper, lead, nickel, and zinc. Results of the investigation are shown in Tables 2 through 7. Influent and effluent values are reported in terms of both the concentration (mg/l) and the loading rate (lb/day).

New York City treatment plant data is based on a 1972 average of daily composite samples. Cleveland values are taken from an April 1955 monthly composite, while the ALCOSAN values are an average of the weekly composite samples for the six-month period of January through June 1973.

Several generalized conclusions can be drawn for the data presented:

1. There is substantial variability between plants in terms of removal capability for any particular heavy metal.

2. In many cases, there is more than an order of magnitude variation in the influent heavy metals concentrations for the various plants.

3. Inspection of the raw data reveals that industrial contributions can account, in large part, for many of the wide variations in treatment plant influent concentrations.

4. Of the six heavy metals investigated, a very rough approximation of secondary plant removal is as follows: lead has the best removal characteristics followed by cadmium, chromium, copper, and zinc, which are roughly about the same, and nickel is the most poorly removed. The exact removal ranges cannot be estimated because of the wide variability not only between plants, but also within the same plant.

TABLE 2

HEAVY METALS IN WASTEWATER TREATMENT PLANT INFLUENT AND EFFLUENT: CADMIUM

Treatment Plant	Influent		Effluent	
	mg/l	lb/day	mg/l	lb/day
New York:				
Wards Island (Secondary-AS)*	0.008	17	0.008	17
Hunts Point (Secondary-AS)	0.011	14	0.017	22
26th Ward (Secondary-AS)	0.038	21	0.020	11
Coney Island (Secondary-AS)	0.012	10	0.008	7
Owls Head (Secondary-AS)	0.019	15	0.014	11
Newtown Creek (Secondary-AS)	0.058	83	0.025	36
Jamaica (Secondary-AS)	0.015	12	0.009	7
Tallman Island (Secondary-AS)	0.012	6	0.012	6
Bowery Bay (Secondary-AS)	0.018	16	0.010	9
Rockaway (Secondary-AS)	0.056	9	0.019	3
Oakwood Beach (Secondary-AS)	---	1	---	2
Port Richmond (Secondary-AS)	0.007	1	0.014	2
Cleveland:				
Easterly (Secondary-AS)	0	0	0.4	340
Westerly (Primary)	0	0	0	0
Southerly (Secondary-AS)	0	0	0.4	200
Pittsburgh:				
ALCOSAN (Primary)	0.021	28	0.018	24
ALCOSAN (Secondary-AS)**			0.007	9

* AS--Activated Sludge
** Pilot Plant

TABLE 3

HEAVY METALS IN WASTEWATER TREATMENT PLANT INFLUENT AND EFFLUENT: CHROMIUM

Treatment Plant	Influent		Effluent	
	mg/l	lb/day	mg/l	lb/day
New York:				
Wards Island (Secondary-AS)*	0.10	194	0.07	141
Hunts Point (Secondary-AS)	0.12	151	0.10	129
26th Ward (Secondary-AS)	0.11	60	0.07	37
Coney Island (Secondary-AS)	0.07	60	0.06	51
Owls Head (Secondary-AS)	0.13	103	0.09	74
Newtown Creek (Secondary-AS)	0.54	783	0.22	314
Jamaica (Secondary-AS)	0.09	66	0.04	33
Tallman Island (Secondary-AS)	0.13	65	0.07	37
Bowery Bay (Secondary-AS)	0.17	155	0.15	131
Rockaway (Secondary-AS)	0.06	10	0.04	7
Oakwood Beach (Secondary-AS)	--	8	--	6
Port Richmond (Secondary-AS)	0.05	7	0.05	7
Cleveland:				
Easterly (Secondary-AS)	1.0	851	0	0
Westerly (Primary)	0.8	227	1.0	284
Southerly (Secondary-AS)	1.0	500	trace	--
Pittsburgh:				
ALCOSAN (Primary)	0.095	125	0.079	104
ALCOSAN (Secondary)**			0.031	41

* AS--Activated Sludge
** Pilot Plant

TABLE 4

HEAVY METALS IN WASTEWATER TREATMENT PLANT INFLUENT AND EFFLUENT: COPPER

Treatment Plant	Influent		Effluent	
	mg/l	lb/day	mg/l	lb/day
New York:				
Wards Island (Secondary-AS)*	0.23	463	0.10	198
Hunts Point (Secondary-AS)	0.19	248	0.18	232
26th Ward (Secondary-AS)	0.24	131	0.22	123
Coney Island (Secondary-AS)	0.26	213	0.11	91
Owls Head (Secondary-AS)	0.20	160	0.17	140
Newtown Creek (Secondary-AS)	0.47	675	0.19	281
Jamaica (Secondary-AS)	0.29	222	0.13	98
Tallman Island (Secondary-AS)	0.21	106	0.11	55
Bowery Bay (Secondary-AS)	0.38	337	0.25	222
Rockaway (Secondary-AS)	0.22	35	0.16	26
Oakwood Beach (Secondary-AS)	--	20	--	18
Port Richmond (Secondary-AS)	0.16	22	0.12	17
Cleveland:				
Easterly (Secondary-AS)	0.4	340	0.2	170
Westerly (Primary)	0.1	28	0.1	28
Southerly (Secondary-AS)	0.1	50	0.1	50
Pittsburgh:				
ALCOSAN (Primary)	0.127	167	0.098	129
ALCOSAN (Secondary)**			0.056	74

* AS--Activated Sludge
** Pilot Plant

TABLE 5

HEAVY METALS IN WASTEWATER TREATMENT PLANT INFLUENT AND EFFLUENT: LEAD

Treatment Plant	Influent		Effluent	
	mg/l	lb/day	mg/l	lb/day
New York:				
Wards Island (Secondary-AS)*	--	--	--	--
Hunts Point (Secondary-AS)	--	--	--	--
26th Ward (Secondary-AS)	--	--	--	--
Coney Island (Secondary-AS)	--	--	--	--
Owls Head (Secondary-AS)	--	--	--	--
Newtown Creek (Secondary-AS)	--	--	--	--
Jamaica (Secondary-AS)	--	--	--	--
Tallman Island (Secondary-AS)	--	--	--	--
Bowery Bay (Secondary-AS)	--	--	--	--
Rockaway (Secondary-AS)	--	--	--	--
Oakwood Beach (Secondary-AS)	--	--	--	--
Port Richmond (Secondary-AS)	--	--	--	--
Cleveland:				
Easterly (Secondary-AS)	0.3	255	trace	--
Westerly (Primary)	0.1	28	0.1	28
Southerly (Secondary-AS)	0.2	100	trace	--
Pittsburgh:				
ALCOSAN (Primary)	0.119	157	0.055	72
ALCOSAN (Secondary)**			0.022	29

* AS--Activated Sludge
** Pilot Plant

TABLE 6

HEAVY METALS IN WASTEWATER TREATMENT PLANT INFLUENT AND EFFLUENT: NICKEL

Treatment Plant	Influent		Effluent	
	mg/l	lb/day	mg/l	lb/day
New York:				
Wards Island (Secondary-AS)*	0.07	139	0.06	126
Hunts Point (Secondary-AS)	0.10	131	0.09	119
26th Ward (Secondary-AS)	0.13	75	0.13	72
Coney Island (Secondary-AS)	0.10	80	0.08	68
Owls Head (Secondary-AS)	0.14	115	0.11	85
Newtown Creek (Secondary-AS)	0.37	531	0.29	421
Jamaica (Secondary-AS)	0.10	80	0.06	49
Tallman Island (Secondary-AS)	0.11	56	0.09	46
Bowery Bay (Secondary-AS)	0.22	194	0.14	122
Rockaway (Secondary-AS)	0.06	10	0.06	9
Oakwood Beach (Secondary-AS)	--	10	--	9
Port Richmond (Secondary-AS)	0.07	9	0.07	9
Cleveland:				
Easterly (Secondary-AS)	0	0	0	0
Westerly (Primary)	0	0	0	0
Southerly (Secondary-AS)	0	0	0	0
Pittsburgh:				
ALCOSAN (Primary)	0.078	103	0.077	101
ALCOSAN (Secondary)**			0.070	92

* AS--Activated Sludge

** Pilot Plant

TABLE 7

HEAVY METALS IN WASTEWATER TREATMENT PLANT INFLUENT AND EFFLUENT: ZINC

Treatment Plant	Influent		Effluent	
	mg/l	lb/day	mg/l	lb/day
New York:				
Wards Island (Secondary-AS)*	1.14	2300	0.43	867
Hunts Point (Secondary-AS)	0.33	424	0.25	321
26th Ward (Secondary-AS)	0.31	168	0.22	120
Coney Island (Secondary-AS)	0.38	316	0.21	172
Owls Head (Secondary-AS)	0.33	265	0.34	275
Newtown Creek (Secondary-AS)	1.58	2280	1.00	1440
Jamaica (Secondary-AS)	0.48	373	0.24	185
Tallman Island (Secondary-AS)	0.36	185	0.21	105
Bowery Bay (Secondary-AS)	0.65	576	0.40	359
Rockaway (Secondary-AS)	0.46	73	0.19	30
Oakwood Beach (Secondary-AS)	--	50	--	33
Port Richmond (Secondary-AS)	0.94	128	0.52	71
Cleveland:				
Easterly (Secondary-AS)	0	0	0.4	340
Westerly (Primary)	0	0	0	0
Southerly (Secondary-AS)	0.1	50	0.5	250
Pittsburgh:				
ALCOSAN (Primary)	0.648	853	0.527	694
ALCOSAN (Secondary)**			0.229	302

* AS--Activated Sludge
** Pilot Plant

5. Based on the data available, the cause of the variability in removal cannot be pinpointed, such as plant operating conditions, influent concentration, or other factors.

DISCUSSION

To meet NPDES permit requirements, it is likely that not only must the regular heavy metal load be handled by the ALCOSAN treatment facility, but also slug doses from hazardous material spills or purposeful discharges can upset the plant for varying periods and can cause sludge disposal problems.

SECTION V

INVENTORY OF HAZARDOUS MATERIALS AND IDENTIFICATION OF INDUSTRIAL DISCHARGES

To identify the sources and quantities of hazardous materials that have a potential of being spilled into the ALCOSAN collection and treatment system, an extensive survey of the system was implemented. In addition to the potential for spills of hazardous materials in great quantities, regular or continuous discharges of hazardous materials also were identified. The inventory was accomplished by means of personal survey and the discharge sampling of industries only where a potential spill or chronic discharge of hazardous materials exists. A questionnaire was used to assess industries' potential for spills.

COMPILATION OF INDUSTRIES AND SOURCES OF HAZARDOUS MATERIALS

Hazardous material spills to a wastewater treatment facility may originate throughout the service area from two general categories of sources. One category is in-transit facilities such as barges, railroad cars and tank trucks. The other source is stationary facilities; these include manufacturing plants, warehouses, chemical processing plants, power generating facilities, food processors, service stations, tank farms, terminals, and the like.

A comprehensive inventory could be developed utilizing stationary facilities as a source of hazardous material spills and extrapolating to cover in-transit facilities. This decision was based on several factors. The most important reason for selecting stationary facilities is that it provides an estimate of hazardous materials in-transit. For the most part, materials stored or consumed at a stationary facility were at one time transported within the service are. The portion of hazardous materials that are transported completely through the service area without stopping are not accounted for by an inventory of only stationary facilities. Transportation records of such hazardous materials are so voluminous as to be unmanageable; manufacturers and shippers records would have to be surveyed. In addition, often the service area is not a geographical or governmental boundary. The ALCOSAN service area encompasses the City of Pittsburgh and 29% of the area and 78% of the population in Allegheny County. The records of stationary facilities are generally complete and accurate because each user of the material is able to account for the quantity of hazardous materials that are on the premises for a given time period (day, week, or month).

ON-SITE SURVEYS

A survey was conducted at stationary facilities throughout the service area by ALCOSAN personnel. The objectives of this survey were twofold. They were designed to acquaint treatment facility personnel with the industry, specifically, the type of activity and wastewater discharged. Secondly, they served to acquaint the industry with the functions and responsibilities of the wastewater treatment authority.

ALCOSAN Industrial Waste Department personnel conducted the survey by visiting the facility. The checklist shown in Appendix B, Table B-1, was completed. Locations for obtaining representative discharge samples to be collected by ALCOSAN were identified.

The 678 industries surveyed included 255 four-digit Standard Industrial Classifications (SIC). These SIC's (Ref. 23) included manufacturing industries whose discharges may cause deleterious effects on the ALCOSAN treatment plant through continuous waste discharge or where a potential for spills exists. Also included were industrial customers with BOD and suspended solids waste discharges in excess of normal domestic sewage levels. Such customers include laundries, bakeries, hospitals, and service industries. Table 8 presents a summary of the manufacturing/industrial groupings which were surveyed. Appendix C, Table C-1 is an expanded version of Table 8. Table 8 and Appendix C, Table C-1 also present a listing of industrial groupings for manufacturing industries (SIC 2011 through 3999) employing more than 50 employees in the ALCOSAN service area and the total number of industries within each industrial group.

Three hundred twenty-eight industries representing 100 different four-digit SIC categories on this list were contacted through the personal survey program.

The results of the survey indicated that the industries were not well aware of the functions and responsibilities of the authority providing wastewater treatment. Industries which required further examination of their discharge practices were identified through the survey. Groundwork was established for the industrial discharge sampling program. Only limited discharge quality information was obtained.

SAMPLING PROGRAM

Industries to be sampled were selected through the survey program. Sampling was carried out by two-man teams from ALCOSAN. All sampling and analyses were conducted according to EPA procedures and procedures outlined in Standard Methods (Ref. 20). Grab type samples of the discharge(s) were collected at one-half hour intervals and composited over the working day. The analyses were performed by the ALCOSAN laboratory staff.

TABLE 8

SUMMARY OF MAJOR MANUFACTURING INDUSTRIAL CATEGORIES WITHIN ALCOSAN SERVICE AREA

Industry Group	No. of Industries*	QUESTIONNAIRE COVERAGE			SURVEY AND SAMPLING PROGRAM COVERAGE	
		No. of Industries+	No. of Responses With Sewer Discharge Quality Data	No. of Responses With Hazardous Material Inventory Data	No. of Industries Surveyed	No. of Industries Sampled
Food and Kindred Products SIC 20	148	28	13	17	58	29
Fabricated Textile Products SIC 22	31	1	0	0	6	0
Mattresses and Box Springs SIC 2515	5	1	0	0	4	4
Paper Products SIC 26	9	5	2	3	7	4
Printing Industries SIC 27	216	5	2	1	50	12
Industrial Chemicals SIC 281, 286	36	17	11	16	40	14
Petroleum Refining SIC 291	6	0	0	0	6	1
Plastic Products SIC 307	23	1	0	1	7	3

See footnotes at end of table.

TABLE 8. (continued)

Industry Group	No. of Industries*	QUESTIONNAIRE COVERAGE			SURVEY AND SAMPLING PROGRAM COVERAGE	
		No. of Industries+	No. of Responses With Sewer Discharge Quality Data	No. of Responses With Hazardous Material Inventory Data	No. of Industries Surveyed	No. of Industries Sampled
Stone, Clay, Glass, Concrete Products SIC 32	43	7	7	4	14	6
Primary Metals SIC 33	42	24	14	21	22	17
Fabricated Metal Products SIC 34	130	29	16	21	68	25
Machinery SIC 35	151	22	16	17	33	8
Transportation Equipment SIC 37	10	1	1	1	0	0
Measuring Instruments; photographic, medical, optical goods; watches SIC 38	46	13	0	10	6	4
Miscellaneous Manufacturing Industries SIC 39	36	6	5	5	7	4
TOTAL	932	160	87	117	328	131

* From: 1972 Pennsylvania County Industry Report, Allegheny County, Bureau of Statistics. Release M-5-71, County Industry Report Series 73212. 1971. p. 33-43. Only manufacturing industry categories employing 50 or more are presented.

+ All of the industry types are not summarized here.

Table 8 and Appendix C, Table C-1, present summaries of the sampling program coverage (i.e., the number of industries that were sampled in each SIC). Industrial discharge data were stored, manipulated, and retrieved using a computer data processing system; these data, summarized by SIC category, are given in Appendix C, Tables C-2 and C-3.

QUESTIONNAIRE

The third method of establishing an inventory of hazardous materials stored within the ALCOSAN service area was with the questionnaire illustrated in Appendix D. This questionnaire was divided into three sections related to stored hazardous materials, sewered industrial wastes, and general background information on the industry.

As the list of hazardous substances required by FWPCAA of 1972, Section 311, (Ref. 39) had not been promulgated by the EPA, the hazardous materials listed in the questionnaire were derived from reports, personal communications, and other lists of hazardous materials. Materials on this list were categorized for two reasons:

1. To aid questionnaire recipients in identifying which hazardous materials they store and use.

2. To group substances which would likely require similar treatment responses.

The 23 categories selected are frequently used and understandable. Although a classification system could have been developed based on potential effects on the wastewater treatment system, a response action was considered to be a more effective criteria and more directly related to corrective efforts.

The mailing list for the questionnaire was developed from the ALCOSAN billing records. The more than 300,000 accounts were screened on the basis of type of account (domestic, commercial, industrial, and public) and water use. As computer coding for type of account was incomplete for purposes such as these, the following water-use criteria were employed to develop the mailing list:

1. Those uncoded accounts using greater than 1500 gpd.

2. Those domestic-commercial accounts using greater than 600 gpd.

3. Those commercial accounts using greater than 200 gpd.

4. All industrial accounts.

This resulted in many questionnaires being sent to customers not considered pertinent including stores, supermarkets, country clubs, restaurants, apartments, taverns, private houses with swimming pools, and large commercial but non-industrial customers.

A total of 5079 questionnaires were sent. Four hundred and twenty pertinent questionnaires were received with 160 being from manufacturing industries listed in Table 8 and Appendix C, Table C-1. The 160 industries responding to the questionnaire represented 68% of the 100 manufacturing SIC categories in the ALCOSAN service area.

Computer data processing was used to store, manipulate, and retrieve questionnaire data. Five major computer printout reports, each with various data sort permutations, were produced to present questionnaire response data. The sort permutations arranged the data by: industry name in alphabetical order, industry serial number (an ID number specific to this study), industry's SIC category, industry's geographic location, discharge wastewater character, stored hazardous material, and various combinations of these. Table 9 presents the data processing format. Appendix D, Table D-1 presents the questionnaire input data card format; the code numbers for the various items presented in the questionnaire can also be found in Appendix D. Further documentation of computer processing is given in Volume 2 of this report entitled "Stored Hazardous Materials and Sewered Industrial Waste Inventory". Volume 2 is on file with the EPA, ALCOSAN, and the subcontractor EQSI and includes the five major computer reports containing questionnaire response data and industrial discharge response data.

Wastewater flow data was given by all 420 questionnaire responses. Table 10 presents the 10 industrial groups with the greatest sewered discharge flow. Data were derived largely from the ALCOSAN sampling program. Discharge quality data obtained through the questionnaires is limited; those data are included in Volume 2. The hazardous material inventory section of the questionnaire yielded extensive data, probably because of the availability of inventory records.

Table 11 (and Appendix E, Table E-1) summarize the hazardous material data by material categories. Since the questionnaire responses were very good in terms of stored hazardous materials, the data could be considered representative of the Pittsburgh area and other areas of the country as well. The largest category of stored materials is the "elements", probably represented by large quantities of coal. From the point of view of effects on the collection system and the sewage treatment facility, "salts", the next largest category including salts of heavy metals, is significant. Mineral acids, organic acids, long and short chain organics and caustics represent the next largest segment of stored hazardous materials. Flammable hydrocarbons and hydrocarbon derivatives are a significant component of the stored hazardous material inventory in the Pittsburgh area.

The results of this survey can be applied to other areas of the country from the point of view of material distribution. A similar survey conducted elsewhere should concentrate on the industrial groups which maintain the largest inventories as presented in Table 11. A survey which concentrated on 30 to 40 industrial groups represented in Table 11 should provide the best cross section of information in other areas.

TABLE 9

DATA PROCESSING REPORT FORMAT

Item	Survey Response Summary			Survey Wastewater Summary			Wastewater Discharge Statistical Summary			Survey Hazardous Materials Inventory Summary			Hazardous Material Inventory Statistical Summary		
	Sorting Parameters	Screening Parameters	Output	Sorting Parameters	Screening Parameters	Output	Sorting Parameters	Screening Parameters	Output	Sorting Parameters	Screening Parameters	Output	Sorting Parameters	Screening Parameters	Output
Zip code			X			X			X			X			X
SIC category			X	X	X	X	X	X	X	X	X	X	X	X	X
Interceptor diversion structure number			X	X	X	X	X	X	X	X	X	X	X	X	X
Alphabetical listing by name	X		X	X		X				X		X			
Master serial number code	X		X			X						X			
Number of employees			X			X			X			X			
Number of shifts			X												
Shift hours			X												
Number of days/work week			X												
Number of discharge points			X	X		X	X	X							
Discharge type			X	X	X	X	X	X							
Discharge identification						X									
Discharge quantity				X		X	X	X							
Total						X			X						
High									X						
Low									X						
Average						X			X						
Standard deviation									X						
Value employee (high, low, average)									X						
Production rate															
Production quantity and units			X												
Pretreatment type					X	X		X							
Wastewater quality parameters				X	X	X		X	X						
Quantity						X			X						
Total						X			X						
High									X						
Low									X						
Average									X						
Standard deviation									X						
Hazardous material category										X		X	X	X	X
Specific hazardous material										X	X	X	X	X	X
Quantity												X		X	X
Total												X			X
High															X
Low															X
Average															X
Standard deviation															X
Total	2	0	12	7	5	16	5	7	17	5	3	10	4	5	11

TABLE 10

TEN LARGEST STANDARD INDUSTRIAL CLASSIFICATIONS
DISCHARGING TO THE ALCOSAN SYSTEM BY WASTEWATER FLOW*

SIC No.	Industry Type	No. of Industries	Wastewater Quantity (mgd)
2032	Canned Specialties	1	1,200,000
2013	Sausages and Other Prepared Meat Prod.	1	1,100,000
2865	Cyclic Intermediates and Crudes	1	1,100,000
3079	Misc. Plastic Parts	2	820,000
2082	Malt Beverages	1	750,000
8061	Hospitals	4	500,000
2011	Meat Packing Plants	5	370,000
2026	Fluid Milk	5	260,000
3312	Blast Furnaces, Steel Works, and Rolling and Finishing Mills	3	230,000
3824	Orthopedic, Prosthetic and Surgical Appliances and Supplies	1	220,000

*Source: ALCOSAN Industrial Discharge Sampling Program Questionnaires

TABLE 11

STORED HAZARDOUS MATERIALS
REPORTED THROUGH QUESTIONNAIRES

Material Category	Total Amount Stored (in millions)	Industry Groups Having Stored Hazardous Materials	Primary Materials
Elements	270 Kg	Steel Works Industrial Chemicals	Carbon Sulfur
Minerals	4 Kg	Glass Machinery Industrial Chemicals	Silicon Dioxide Magnesium Oxide
Salts of Low to Medium Molecular Weight	14 Kg	Steel Works Bakeries	Aluminum Sulfate Sodium Chloride
Salts of Low to Medium Toxicity*	9 Kg	Industrial Chemicals Machinery	Aluminum Hydroxide Sodium Nitride Sodium Hexameta-phosphate
Salts containing Heavy Metals*	.04 Kg	Metal Products Industrial Chemicals Glass	Iron Sulfate Nickel Sulfate Potassium Dichromate
Acids*	3.2 Kg .75 l	Industrial Chemicals Metal Works Machinery Industrial Chemicals	Hydrochloric Acid Sulfuric Acid
Short Chain Organic Acids*	.9 Kg	Industrial Chemicals Beverages Dairy Products	Fumaric Acid Citric Acid
Long Chain and Cyclic Organic Acids*	2.5 Kg .018 l	Industrial Chemicals	Phthalic Acid
Caustics*	9 Kg 22 l	Glass Industrial Chemicals	Sodium Carbonate Sodium Hydroxide

* Denotes hazardous material.

TABLE 11. (continued)

Material Category	Total Amount Stored (in millions)	Industry Groups Having Stored Hazardous Materials	Primary Materials
Oxides	.2 Kg	Glass Paints	Antimony Oxide Lead Oxide
Insecticides Fungicides*, etc.	.003 Kg .006 l	Industrial Chemicals Bakeries	Chlorinated and Organic Phosphorus Insecticides PCP (Pentachloro-phenol)
Phenols* and Cresols*	.9 Kg .3 l	Industrial Chemicals Steel Works	Phenol and Mixtures
Poisons (metal)*	4 Kg	Machinery	Cyanide Products
Poisons (Halogenated)*	.06 Kg .005 l	Industrial Chemicals	Tetrachloroethylene Methylchloroform
Poisons (Organic)*	4 Kg	Industrial Chemicals	Allyl Alcohol
Radioactive Material*	5.5 μC (micro-curies)	Testing Laboratories Hospitals	Cesium
Heavy Metal Organics*	.002 Kg	Paints	Miscellaneous Compounds
Flammable Hydrocarbons*	38 l 11 Kg	Industrial Chemicals Petroleum Terminals	Bunker "C" Diesel Oil Gasoline
Non-Flammable Hydrocarbons*	3 Kg 1 l	Machinery Cement Industrial Laundries	Polyethylene Acetone

* Denotes hazardous material.

TABLE 11. (continued)

Material Category	Total Amount Stored (in millions)	Industry Groups Having Stored Hazardous Materials	Primary Materials
Flammable Hydrocarbon Derivatives*	9 Kg 18 l	Industrial Chemicals Machinery	Butanol Acetone
Non-Flammable Hydrocarbon Derivatives*	43 Kg .2 l	Industrial Chemicals Machinery	Dialkylphthalates Trichloroethylene
Compressed Gases	7 l .09 Kg .01 cum	Paints Steel Works Machinery	Freon Acetylene Propane
Miscellaneous and Special Materials	.09 Kg	Paints Testing Laboratories	Hydrogen Peroxide Miscellaneous

* Denotes hazardous material.

A surprisingly small quantity of radioactive materials was stored in the area. However, these materials are disbursed throughout the area in small quantities at testing laboratories and hospitals.

The most significant effect observed on the pilot plant operation (described in the next section of this report) was due to fuel oil. The second most significant effect was due to perchlorethylene. As can be seen from Table 11, compounds and mixtures similar to these are stored in significant quantities in the Pittsburgh area. Crude oil, diesel oil, and gasoline are stored in the largest quantities at lower elevations along the rivers. Impact on the plant of tank ruptures would probably be minimum. The effect would largely be concentrated on the rivers.

Pilot plant studies and the selection of plant countermeasures in other parts of the country could be guided by a limited survey performed especially for the area, using the ALCOSAN data and methodologies as a guideline.

SECTION VI

PILOT PLANT EVALUATIONS

INTRODUCTION

Sensitivity of biological treatment processes to slug doses of hazardous material spills has been reported by many investigators (Ref. 4). However, there are no firm data from full-scale plant operation, primarily because the results of accidental spills are not measured readily. Pilot plant scale studies have been done with industrial wastes to provide design data; however, the wastes usually consisted of a mixture of materials (Ref. 4).

EXPERIMENTAL DESIGN

The objectives of the pilot plant hazardous material study were threefold:

1. To assess the reliability or applicability on a pilot-scale of results in the literature largely performed at the laboratory-scale.

2. To fill information gaps regarding the effects of certain hazardous materials on the activated sludge process.

3. If severe effects on plant operation were observed -- to develop slug-dose hazardous material operational strategies when severe effects on plant operation were observed.

"Upset", in the context of the analyses performed during the study, means that the pilot plant effluent quality deviated significantly from the mean values of BOD, COD, suspended solids and other quality parameters under normal or non-spill conditions. The mean values for those parameters chosen for observation during the study were determined by a series of baseline runs before the pilot plant was exposed to the hazardous materials. The values for standard deviation which appear on the figures are derived from baseline data and are presented to show the expected variation of the mean under normal operating conditions.

All of the studies were done in the existing pilot plant described later in this section, at a fixed flow rate of 68 l/min (18 gpm, or about 26,000 gpd). The pilot plant was initially designed and built at ALCOSAN to develop design parameters for the full scale plant. It therefore duplicates conditions on a smaller scale, which might be expected

to occur within the full scale plant. The only significant difference between the operating parameters of the full scale and pilot facilities are the way in which the activated sludge is wasted. Activated sludge is wasted in the pilot plant only when mixed liquor suspended solids (MLSS) climb above the desired control levels. Recirculation of activated sludge is going on the remainder of the time. From an experimental point of view with regard to the effects of hazardous materials, this is desirable since recirculation of the sludge is largely continuous. Buildup of heavy metals in the activated sludge solids, for example, is probably somewhat higher than what might be expected in the full scale plant under similar spill conditions.

The experimental design of the pilot plant studies was based on testing several hazardous materials with a limited number of pilot plant runs for each material. Runs were performed at various concentrations and spill durations without defining the exact critical material concentration of spill duration which would cause failure. Driving the system to failure in each case would have significantly extended the time required for the overall study because of the recovery times required after each event. The thrust of the study was to examine many compounds rather than to examine a few compounds intensely. This resulted in a broader-based study and process effect information on a wide variety of chemical types.

Studies of each material were designed with the spill duration held constant and operating conditions maintained as in the full-scale activated sludge plant. Influent quality characteristics to the pilot plant were allowed to vary as would normally be the case for any full scale facility. Spilled material concentration in the activated sludge liquor varied during different runs. Maximum probable spill events were estimated by judging the total quantities of materials in the Pittsburgh area and postulating the spill events. In all cases, it will be seen that the quantities of hazardous materials used in the spills are probably much greater than what might reasonably be expected under everyday conditions. For example, one or two very large storage tanks for fuel oil would have to be ruptured at the same time and all of this material find its way to the ALCOSAN sewers in order to approximate the quantities used in pilot plant run number 10-1. The resultant pilot plant effects are, therefore, the most severe adverse effects likely to be observed after a slug-type spill.

The exception to the slug-type spill was the addition of unneutralized scrubber water from the incinerator stack gas scrubbers over a 24-hour period. Failure in the caustic soda neutralization system at the scrubber facility would result in this water being pumped to the head-end of the plant unneutralized. This failure, whether due to mechnical or other reasons probably could not be corrected immediately.

Selections for materials to be tested in the pilot plant were based on (a) chemicals which were felt to be representative of a class,

e.g., ammonium chloride for salts; and (b) chemicals representing the largest quantities of hazardous materials in the Pittsburgh area.

During normal full scale plant operating conditions, the number of samples taken and subsequent analyses would be dictated by the NPDES* permit requirements. It was necessary, therefore, to define a significant deviation from the mean as, for example, a depression of treatment plant performance in the case of BOD removal efficiency. During the period of the study, the requirements specified daily 24-hour composite samples. Since it was likely that this requirement would be upgraded, much shorter composite periods were used (in the order of a few hours). Because of the compositing, the data are generally presented in this report in a bar-graph format, thereby presenting sampling conditions at the same time.

Care should be taken in studying the results of the effort, particularly in assessing the significance of variations in influent and/or effluent concentrations or in changes of percent removal. If samples would normally be composited on an 8-hour basis, for example, changes within that period would be averaged out. In general, pilot plant operational deviations which occurred and recovered within one detention period (6 to 8 hours) were not considered to be significant variations from the mean. Even deviations which occur and recover within a 24-hour period have only limited significance in the operation of a full scale biological treatment facility. Severe plant upsets for full scale treatment facilities which could adversely affect NPDES effluent requirements would result in plant shutdowns or upsets of several days' duration. The NPDES effluent requirements are designed to accommodate short intervals of plant upset with simultaneous effects on various effluent quality parameters. In general, the results observed during the pilot plant effort were not significant from this point of view.

Care should also be exercised in interpreting the data for application to full-scale facilities. Significant plant upsets might result in a full-scale facility even at lower concentrations than those used in this study. For example, under conditions of depressed dissolved oxygen in the mixed liquor, heavy metal effects might be more pronounced. Other operating conditions such as mixed liquor suspended solids (MLSS) concentrations, sludge age and other variables could be important where variations in these together with spills of hazardous materials could result in significant plant upsets. It is commonly known that major biological treatment facilities experience plant upsets regularly; a plant upset of several days' duration was observed at the ALCOSAN facility during the course of this study. The reasons for it could not be determined. Because of resource constraints, the primary variables tested in this study were type and concentration of the hazardous materials presented in this section and in Appendix F.

*NPDES - National Pollution Discharge Elimination System

Unfortunately, the measurement of "percent removal" is a common one in use generally at treatment plants throughout the country. Results are presented herein from this point of view in order to allow comparison with data at other treatment plants. However, mass balances were done on both the pilot plant and the full scale facility in order to determine the fate of materials in the treatment sequence. Some analyses were also done to determine the uptake of heavy metals in sludge and these are presented.

Two separate effects on the full scale treatment facility are important from a regulatory point of view. Hazardous materials may "upset" a treatment plant by causing wide deviations in operational stability. On the other hand, the effect of the pass-through of some hazardous materials may be slight or minor on the treatment processes themselves, but appear in the treatment plant effluent causing deviations from prescribed NPDES effluent requirements. The effects of both of these impacts on system performance can be seen from this study.

The effect of the so-called "chronic" discharges of hazardous materials have not been examined in this study. For example, it has been determined that the sludge takes up heavy metals, but the effect of lower concentrations or loadings of heavy metals on the activated sludge process on a continuous basis over longer periods of time than those studied is not known. It could be, therefore, that lower concentrations than those used during the course of this study could cause significant plant upsets after building up to certain levels over a long period of time.

SELECTION OF HAZARDOUS MATERIALS

Questionnaire results and the EPA designation of hazardous substances were not available when pilot plant studies were designed. The materials for these studies were selected from literature related to hazardous materials and industrial wastes and from ALCOSAN survey and sampling experience, thus, insuring national and local significance. Selection of the materials was based on the following:

1. The material must have a high priority ranking, its rank was function of the quantity of material produced, the quantity transported by the various modes, the frequency of spill incidents by the carrier, and the toxicity of the material (Ref. 1).

2. The material must be utilized in industrial applications common to industry in the Pittsburgh area. Efforts were made to select representative materials from pertinent categories of material in the questionnaire.

Table 12 presents the initial list of materials to be evaluated. Since all materials could not be evaluated in the pilot plant, Warburg respirometer studies were conducted as a first level screening. Respirometer results do not simulate expected pilot-or full-scale results, or spill conditions. These studies were designed to determine approximate concentration which would inhibit biological activity and eliminate materials not toxic at extreme concentration to the ALCOSAN activated sludge. Respirometer studies were selected because oxygen uptake rate provides a direct measurement of cellular activity without causing drastic changes in cellular environment. The materials screened in the respirometer studies and evaluated in the pilot plant are indicated in Table 12 A comparison of materials on this list with those presented in Table 11 and Appendix E, Table E-1 summarizing questionnaire hazardous material inventory data illustrates the local significance of the materials studied in the pilot plant. Questionnaire results show the materials studied in the pilot plant when ranked by quantity stored in the ALCOSAN service area except for cadmium chloride and perchloroethylene generally were within the top 35% of their respective material categories.

DESCRIPTION OF PILOT PLANT FACILITY AND STUDY FORMAT

Pilot plant studies were intended to simulate a chemical spill or slug dose entering wastewater treatment facility. The spilled material was introduced at the influent of the secondary treatment phase rather than prior to primary treatment, thereby exaggerating effects on the activated sludge process. In a full-scale facility, some hazardous materials studied could pass out of the system partially with the settled sludge or floatables, thus reducing the impact on secondary treatment. All of the materials used would be affected to varying degrees by primary treatment. Fuel oil would be partially removed by skimmers and some perchloroethylene would pass out with the settled primary sludge. Heavy metal salts could react with ambient alkalinity, and mineral acids and/or bases could be partially buffered depending on quality conditions. The primary treatment phase in fact provides an opportunity in most plants to significantly alter the potential spill effect on secondary treatment. This is further discussed in the countermeasures section.

Figure 1 shows a schematic of the pilot plant. The spilled material was metered into the pilot plant influent before the influent entered aeration tank number 2. Pilot plant influent was pumped from a holding tank with a direct intake from the main plant primary effluent channel to a constant head box used to maintain a flow at 68 l/min (18 gpm), into a distribution box, then into aeration tank number 2. Tanks 2, 3, and 4 are a series of aeration tanks containing the activated sludge

TABLE 12

POTENTIAL CANDIDATES FOR HAZARDOUS MATERIAL STUDIES

1. Acetic Acid*
2. Acetone*
3. Aldrin*
4. Ammonia
5. Ammonium Chloride*+
6. Aniline*
7. Arsenic Trichloride
8. Benzyl Chloride
9. Cadmium Chloride*+
10. Carbon Tetrachloride
11. Chlorobenzene
12. Chloroform
13. Chloromethane
14. Copper Sulfate*+
15. Cyanides
    a. Sodium Cyanide*
    b. Copper Cyanide*
16. 2,4-Dichlorophenoxyacetic Acid*
17. Diethylamine
18. Dimethyl Sulfate
19. Dinitrobenzene
20. Ethanol*
21. Fuel Oil+
22. Gasoline*
23. Hydrochloric Acid
24. Isopropylamine
25. Lead Arsenate*
26. Lead Nitrate
27. Mercuric Cyanide
28. Mercuric Sulfate*
29. Mercury*
30. Methanol+
31. Morpholine
32. Nitrate*
33. Nitric Acid*
34. Organic Mercury Compounds*
35. Pentachlorophenol*
36. Perchloroethylene (= tetrachloroethylene)+
37. Phenol+
38. Potassium Dichromate*
39. Pyridine
40. Scrubber Water+
41. Sodium Arsenite*
42. Sodium Dichromate*
43. Sodium Hydroxide+
44. Sulfuric Acid (Pickle Liquor)+
45. Tetraethyl Lead
46. Trichloroethylene
47. Vinyl Chloride

* Indicates materials screened in Warburg respirometer studies.
+ Indicates materials evaluated in the pilot plant.

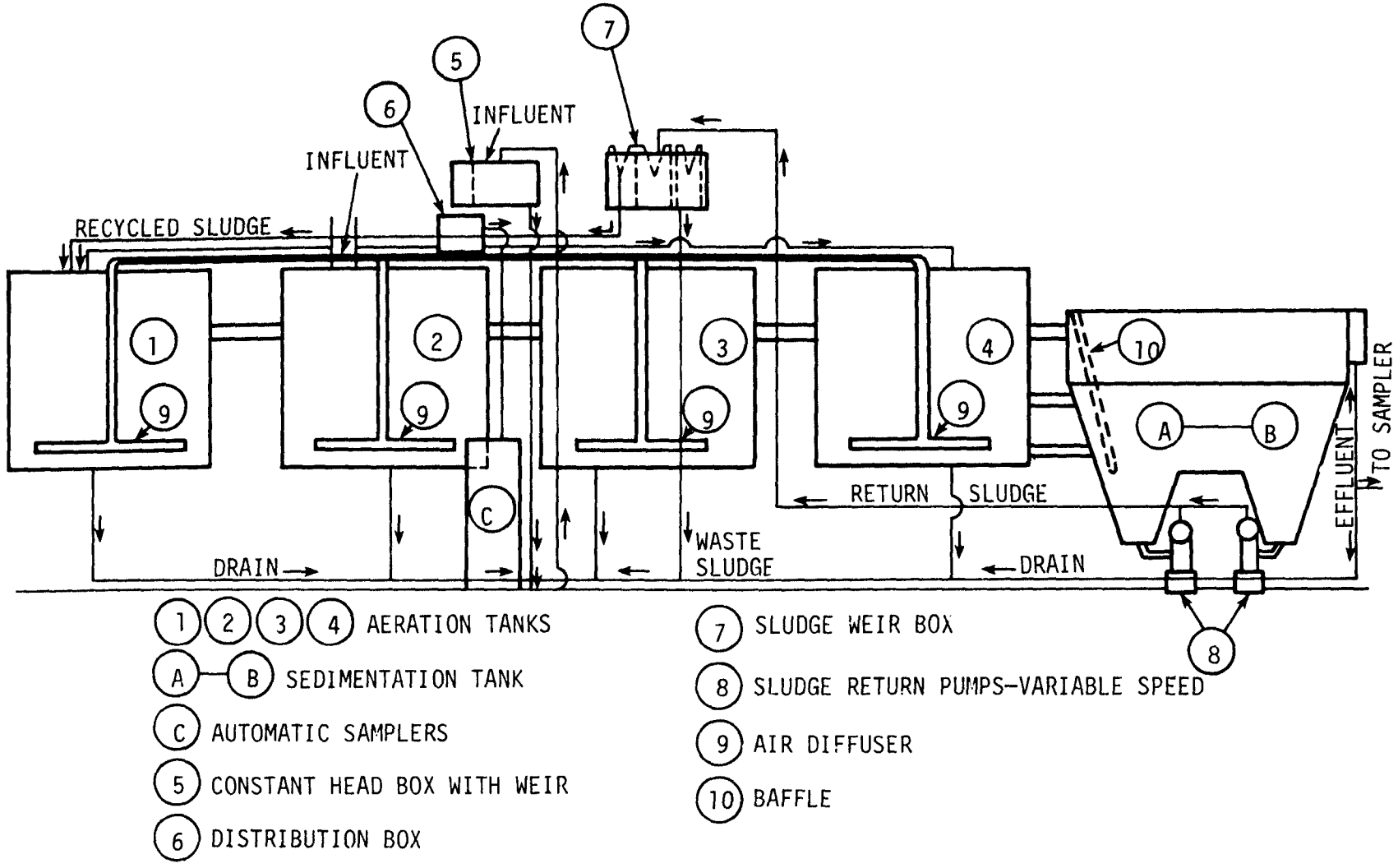

FIGURE 1. STEP AERATION PILOT PLANT SCHEMATIC

mixed liquor. Design BOD and suspended solids loadings to the pilot plant are 3.2 and 1.7 kg/day/cu m respectively (20 and 11.2 lb/day/100 cu ft). The four circular aeration tanks have a capacity of 3,600 liters (952 gal) each and a hydraulic retention time of slightly greater than 2 hours through tanks 2, 3, and 4. The rectangular, double hopper sedimentation tank has a volume of 3,480 liters (920 gal), a surface area of 3 sq m (32 sq ft), a surface loading rate of 33 cu m/day/sq m (810 gpd/sq ft), and a retention time of approximately 40 minutes. Settled activated sludge is pumped to a distribution box at the design rate of 17 liters/min (4.5 gpm). From this box sludge is either wasted or passed to tank 1 where it is aerated and returned to the activated sludge phase in tank 2. The retention time in tank 1 is 3.5 hours. Activated sludge is not wasted continuously, but only when the mixed liquor suspended solids (MLSS) and sludge volume index (SVI) indicate the necessity for wasting.

Hazardous materials spill (HMS) study durations were from 52 to 120 hrs. Chemical spills were generated for 30 to 60 minutes except for one 24-hour spill. In initial studies grab type samples of the influent, effluent, and mixed liquor were collected at intervals of 15 min to 4 hours. After the possibility of short circuiting was examined and ruled out, the sampling regimen was modified to reduce the workload on the ALCOSAN laboratory. The routine for each run consisted of 30 min composite type samples for 2 retention times, followed by two four-hour composites, and eight hour composites for the remainder of the HMS hour. The 200 ml individual samples used to construct the composite samples were collected at from one to four minute intervals. In every study 27 parameters were analyzed. These included eight heavy metals, in both the soluble and insoluble phases, total Kjeldahl nitrogen, ammonia nitrogen, phenol, and the wastewater parameters commonly measured. All analyses were performed according to Standard Methods (Ref. 20).

To determine the "typical" performance of the pilot plant, two base line studies were conducted. The formats of these runs were similar to the hazardous material studies except that no hazardous material was added. Because of the time and cost constraints and the general uniformity of the baseline data only two baseline runs were conducted. To examine for patterns of fluctuation (e.g., diurnal fluctuations), data from the two baseline runs was fitted to a fifth order polynomial equation. Results of this least squares fit for influent and effluent BOD and percentage BOD removal are shown in Figure 2. Some patterns were evident from these data. When baseline data are presented for comparison purposes, these are shown as the mean calculated from all data over the entire duration of the run. To present a comparison with "typical" operation, data presented graphically in this report include both the data from the hazardous material run and the arithmetic mean of the parameter as determined from the baseline runs. Plus and minus one standard deviation from the mean also is presented to give some indication of the variation experience during the baseline runs. Seasonal variations in influent character are experienced at ALCOSAN; however, while this was realized, little effort was made to examine the magnitude or ramifications of seasonal variations.

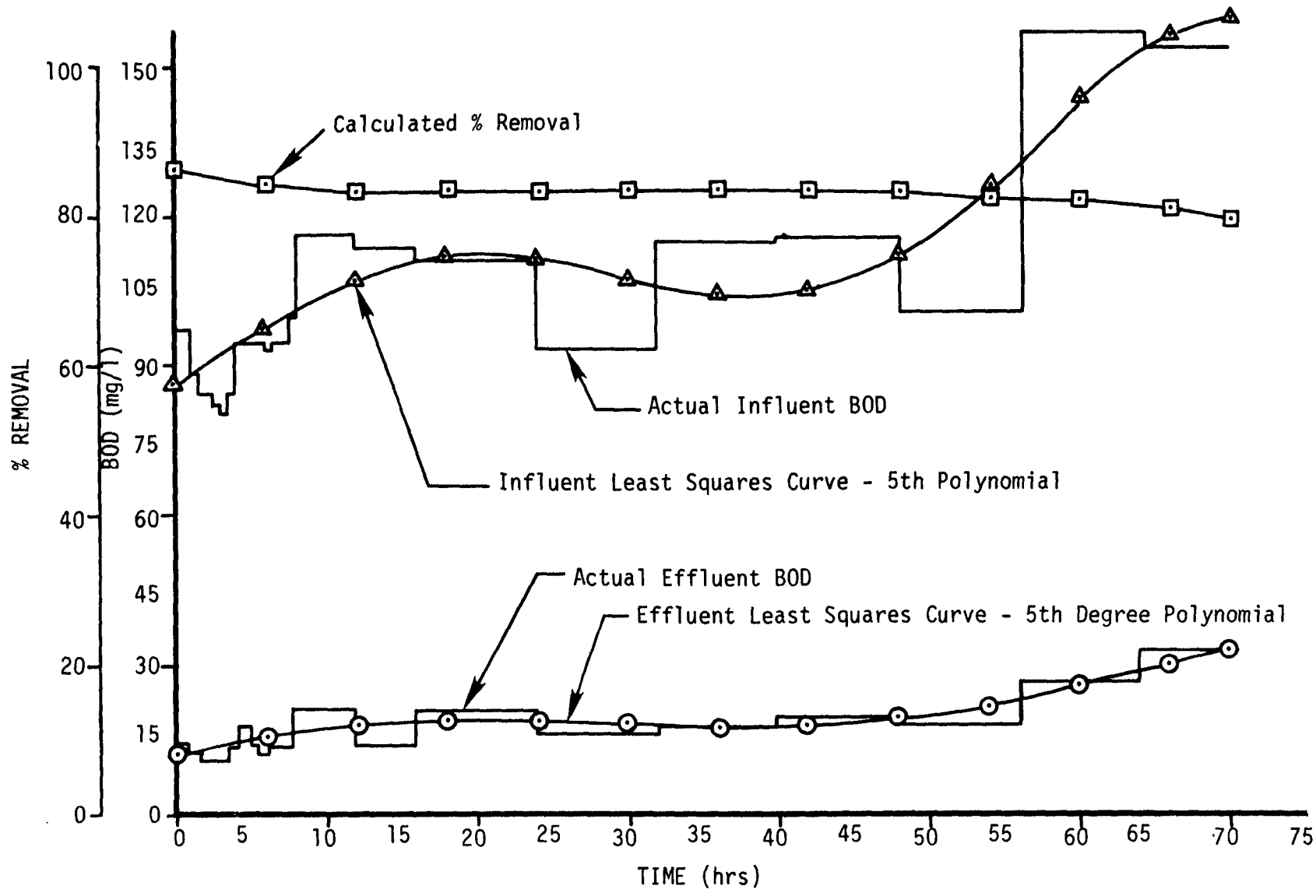

FIGURE 2. BASE LINE BOD LEAST SQUARES FIT CURVE

All runs were conducted during the late spring and summer of 1974.

RESULTS

The results of the pilot plant hazardous material studies are presented on Figure 3 through 9 and in Tables 13 through 21.* These data have been selected because they represent studies during which significant effects on effluent quality (either organic matter content or effluent spilled material concentration) were experienced. The voluminous quantity of data obtained during the pilot plant hazardous material studies could not be presented in the body of this report but a complete set of the graphs and data are presented in Appendix F. The patterns illustrated by Figures 3 through 9 are typical of results from all studies, only the magnitude of the effects vary. The results of all pilot plant studies are summarized in Table 12. Background information on each hazardous material study is presented in Table 14.

The effects of a spill on effluent concentration of the spilled material are illustrated on Figure 3 and data is given on Tables 15 and 16 (cadmium). The spills presented on Figure 3 were of 30 min duration, 100 mg/l and 500 mg/l total cadmium spills. (Skewed error curves also were demonstrated in other studies.) The maximum effluent concentration of approximately 6% of the influent concentration occurred 2 to 2.5 hr. after the spill. Ten hours after the spill the effluent total cadmium concentration had decreased substantially, but after 48 hr. the effluent concentration of 0.09 mg/l and 0.25 mg/l were greater than the pre-slug level of 0.03 mg/l. The 500 mg/l slug dose of cadmium did not significantly affect the biological activity in the pilot plant but cadmium passed through the facility and was discharged in concentrations shown.

The effect of a 100 mg/l, 30 min duration copper spill on BOD reduction is presented on Figure 4. A noticeable, but short term, reduction in BOD removal efficiency was indicated. From 9 to 13 hr after the spill the minimum efficiency of 54% occurred; 20 hr after the spill performance had recovered to pre-slug levels. As shown on Figure 5 the discharge of copper from the pilot plant followed the pattern displayed by cadmium. The peak effluent concentration of approximately 12% of the influent peak occurred 3 to 3.5 hr after the spill. After 100 hr the effluent concentration was 0.09 mg/l; still greater than the pre-slug concentration which averaged 0.06 mg/l. The data presented on Figures 4 and 5 are given in Table 17. This extended 120 hr study was intended to study the effect of recycling activated sludge which had been in contact with the slug dose and likely had adsorbed large quantities of the spilled material. Figure 6 (and Table 18) show that copper was taken up by the activated sludge; the peak content occurred about 13 hr after the spill and was greater than 3 times the pre-slug content. Neither Figures 4 nor 5 indicate an effect from recirculation of this copper-laden sludge.

---

* Also see Appendix K

TABLE 13

SUMMARY OF PILOT PLANT HAZARDOUS MATERIAL STUDIES (HMS)

A. STUDY NUMBER B. SPILLED MATERIAL C. DESIGN SPILL CONCENTRATION* D. ACTUAL SPILL CONCENTRATION* E. SPILL DURATION F. PROPORTIONATE SPILL TO FULL-SCALE FACILITY+	PARAMETER	EFFECT	REMARKS
A. No. 1-1 B. Cadmium (from cadmium chloride) C. 100 mg/l D. 100 mg/l dissolved Cd E. 30 min. F. 5200 lb. Cd	BOD	Removal efficiency not affected.	Cause for decline in COD removal efficiency could not be determined; it does not correspond with BOD or SS data.
	COD	Removal efficiency not affected immediately but 24 hr. after spill efficiency began to decrease and continued to decrease to minimum of 36% 18 hr. later.	Effluent Cd level never recovered to pre-slug levels even after 48 hr.
	SS	Removal efficiency varied considerably but variations could not be related to influence of slug dose.	Sludge settling and sludge SVI were not affected. The oxygen uptake generally was constant and did not appear to be affected by the spill.
	Cd	Maximum effluent total Cd concentration of 5.4 mg/l occurred 2 hr. after spill. The effluent level decreased following the peak to about 0.10 mg/l 48 hr. after the spill. 70% of the effluent Cd was in the dissolved form.	In general, there was only a slight effect on plant performance.

* In the mixed liquor.

\+ Based on a hypothetical flow of 150 MGD in a full-scale plant and the following conditions in the secondary treatment plant: (a) mean MLSS = 1500 mg/l + 290, (b) SVI = 90 + 28, and (c) mean air flow = 0.012 cu m/l + 0.003 (1.6 cu ft/gal + 0.4; with the following assumptions: (a) hazardous materials pass unaffected through primary treatment and (b) spill duration is 1 hr.

TABLE 13. (continued)

A. STUDY NUMBER B. SPILLED MATERIAL C. DESIGN SPILL CONCENTRATION* D. ACTUAL SPILL CONCENTRATION* E. SPILL DURATION F. PROPORTIONATE SPILL TO FULL-SCALE FACILITY +	PARAMETER	EFFECT	REMARKS
A. No. 1-2 B. Cadmium (from cadmium chloride) C. 500 mg/l D. 560 mg/l dissolved Cd E. 30 min. F. 26,000 lb. Cd (29,000 lb. dissolved Cd **)	BOD	Minimum removal efficiency of 31% occurred 20 hr. after the spill. 48 hr. after the spill effluent BOD level approached pre-spill concentrations and removal efficiency improved, but not to pre-spill performance.	The initial rapid decrease in influent and effluent BOD concentration were attributed to the toxic effect of Cd in the standard BOD_5 analysis.
	COD	The minimum removal efficiency of 46% occurred 16 hr. after the spill and improved steadily thereafter.	Since effluent COD closely paralleled influent COD the role of the Cd slug dose in causing increased effluent COD is questionable.
	SS	Effluent SS increased for 3 hr. following spill and for next 24 hr. fluctuated at about 25 mg/l; 48 hr. after spill pre-slug levels were approached.	Effluent turbidity measurements corroborated effluent BOD and SS data. Oxygen consumption was depressed for up to 5 hr. after the spill.
	Turbidity	From 1 to 4 hr. after the spill effluent turbidity increased rapidly reaching a maximum 20 hr. after the spill; after 48 hr. pre-spill levels were approached.	Visual observations of effluent indicated carry-over of activated sludge solids. Recirculation of cadmium-laden activated sludge did not appear to affect process performance.
	Cd	Maximum effluent total Cd concentration of about 30 mg/l occurred 2.5 hr. after the spill then a decrease was observed. After 48 hr. effluent Cd level was 0.25 mg/l, about 5 times pre-slug levels. Cd concentration in mixed liquor increased to 20 mg/l within 12 hr. after the spill then decreased to about 15 mg/l through the remainder of the study.	The spill did not appear to disturb nitrogen transformation typical in conventional activated sludge, biological treatment. A 500 mg/l Cd spill had more detrimental effects than the 100 mg/l Cd spill; but the effects were short term.

* In the mixed liquor.

\+ Based on hypothetical flow of 150 MGD in a full-scale plant and the following conditions in the secondary treatment plant: (a) mean MLSS = 1500 mg/l ± 290, (b) SVL = 90 ± 28, and (c) mean air flow= 0.012 cu m/l influent ± 0.003 (1.6 cu ft/gal ± 0.4); with the following assumptions: (a) hazardous materials pass unaffected through primary treatment and (b) spill duration is 1 hr.

** Proportionate spill to FSP facility based on "D" - actual spill concentration.

TABLE 13. (continued)

A. STUDY NUMBER B. SPILLED MATERIAL C. DESIGN SPILL CONCENTRATION* D. ACTUAL SPILL CONCENTRATION* E. SPILL DURATION F. PROPORTIONATE SPILL TO FULL-SCALE FACILITY	PARAMETER	EFFECT	REMARKS
A. No. 2-2 B. Sulfuric acid C. 0.84 ml/l influent, Influent pH = 2.0 D. Influent pH = 1.9 E. 30 min. F. 5,300 gal. concentrated sulfuric acid	BOD	Removal efficiency decreased to 56% 4 hr. after spill; after 5 hr. pre-spill performance was re-established and maintained throughout the study.	The mixed liquor in tank 2 reached a minimum of pH 2.3 one hr. after spill then recovered to pH 6.6 three hr. after spill. The mixed liquor in tank 4 reached a minimum of pH 3 after 2 hr. then recovered to pH 6.8 after 6.5 hr.
	COD	Removal efficiency reduced from pre-spill 78% to zero within 5 hr. but recovered quickly to 60% and after 33 hr. pre-spill efficiency was re-established.	The spill had an adverse effect on nitrogen removal; ammonia nitrogen removal averaged 2% compared to 30-50% typical for conventional activated sludge.
	SS	Removal efficiency dropped to zero within 4 hr. of spill; in less than 6 hr. after the spill efficiency recovered to greater than 60%.	During the spill the proportion of influent heavy metals in the dissolved form increased.
	Turbidity	Effluent turbidity increased rapidly to 59 Hellige units within 5 hr. after the spill then decreased immediately and fluctuated from 7 to 99 units (about 2 to 6 times pre-spill turbidity).	In general, there was a drastic effect on plant performance; however, the effect was short term with almost complete recovery in less than 12 hr.
	pH	Effluent pH did not decrease for 2 hr. following spill; minimum pH of 3.1 occurred 2.5 hr. after spill; 5 hr. after spill effluent pH recovered to 6.9.	he extreme pH resulting from the caustic spill affected plant performance more and for a longer period than did the extreme pH from the acid spill.

* In the mixed liquor.

\+ Based on hypothetical flow of 150 MGD in a full-scale plant and the following conditions in the secondary treatment plant: (a) mean MLSS = 1500 mg/l ± 290, (b) SVL = 90 ± 28, and (c) mean air flow = 0.012 cu m/l influent ± 0.003 (1.6 cu ft/gal ± 0.4); with the following assumptions: (a) hazardous materials pass unaffected through primary treatment and (b) spill duration is 1 hr.

TABLE 13. (continued)

A. STUDY NUMBER B. SPILLED MATERIAL C. DESIGN SPILL CONCENTRATION* D. ACTUAL SPILL CONCENTRATION* E. SPILL DURATION F. PROPORTIONATE SPILL TO FULL-SCALE FACILITY +	PARAMETER	EFFECT	REMARKS
A. No. 3-1 B. Sodium hydroxide C. 2.4 gm/l influent, Influent pH = 12.0 D. Influent pH = 12.6 E. 30 min. F. 126,000 lb. sodium hydroxide	BOD	One to nine hr. after the spill effluent BOD fluctuated near 90 mg/l. Removal efficiency dropped to zero within 2 hr. after spill and recovered to near pre-spill performance 21 hr. after spill.	Nitrogen removal was adversely affected throughout the study. Sodium hydroxide impaired plant efficiency for approximately 30 hr. but recovery generally was complete and no long term effects were noted. The extreme pH resulting from the caustic spill affected plant performance more and for a longer period than did the extreme pH resulting from the acid spill.
	COD	Removal efficiency dropped to zero within 2 hr. after the spill and remained there for the next 19 hr. After 29 hr. performance approached pre-spill levels. Maximum effluent COD of about 380 mg/l occurred 3 hr. after spill.	
	SS	Effect on removal efficiency was similar to that experienced with COD. After 29 hr. removal had been established at 50 to 60% Maximum effluent SS of 240 mg/l occurred 4.5 hr. after spill.	
	Turbidity	Effluent turbidity reached a maximum of 73 Hellige units 9 to 13 hr. after spill. After 48 hr. turbidity was about 6 times pre-spill effluent turbidity.	
	pH	Effluent pH reached a maximum of pH 11.8 at 2.5 to 3 hr. after the spill. Effluent pH then decreased in a manner to pH (continued on next page)	

* In the mixed liquor.

\+ Based on a hypothetical flow of 150 MGD in a full-scale plant and the following conditions in the secondary treatment plant: (a) mean MLSS = 1500 mg/l ± 290, (b) SVI = 90 ± 28, and (c) mean air flow = 0.012 cu m/l influent ± 0.003 (1.6 cu ft/gal ± 0.4); with the following assumptions: (a) hazardous materials pass unaffected through primary treatment and (b) spill duration is 1 hr.

TABLE 13. (continued)

A. STUDY NUMBER B. SPILLED MATERIAL C. DESIGN SPILL CONCENTRATION* D. ACTUAL SPILL CONCENTRATION* E. SPILL DURATION F. PROPORTIONATE SPILL TO FULL-SCALE FACILITY +	PARAMETER	EFFECT	REMARKS
CONTINUED FROM PREVIOUS PAGE	PH	7.6 twelve hr. after spill. The mixed liquor in tank 2 reached a maximum pH of 12.1 and in tank 4 a pH of 11.6 in 2 to 3 hr. after the spill. Mixed liquor pH returned to less than 7.5 in 24 hr. following the spill.	

* In the mixed liquor.

\+ Based on hypothetical flow of 150 MGD in a full-scale plant and the following conditions in the secondary treatment plant: (a) mean MLSS = 1500 mg/l ± 290, (b) SVI = 90 ± 28, and (c) mean air flow = 0.012 cu m/l influent ± 0.003 (1.6 cu ft/gal ± 0.4); with the following assumptions: (a) hazardous materials pass unaffected through primary treatment and (b) spill duration is 1 hr.

TABLE 13. (continued)

A. STUDY NUMBER B. SPILLED MATERIAL C. DESIGN SPILL CONCENTRATION* D. ACTUAL SPILL CONCENTRATION* E. SPILL DURATION F. PROPORTIONATE SPILL TO FULL-SCALE FACILITY +	PARAMETER	EFFECT	REMARKS
A. No. 4-1 B. Methanol C. 1000 mg/l D. - E. 60 min. F. 7900 gal. methanol	BOD	Effluent BOD increased to about 220 mg/l 3 hr. after spill then declined to pre-spill levels within 21 hr. after the spill.	Results indicated that the soluble organic passed through the treatment system with some removal but no adverse effect on biological processes.
	COD	Maximum effluent COD of about 320 mg/l occurred 2.5 hr. after the spill then declined to 60 to 80 mg/l within 13 hr. after the spill. Typical pre-spill efficiencies were experienced 10 hr. after the spill.	
	SS	Effluent SS level and removal efficiency were not affected.	
	Turbidity	Effluent turbidity was not affected.	

* In the mixed liquor.

\+ Based on a hypothetical flow of 150 MGD in a full-scale plant and the following conditions in the secondary treatment plant: (a) mean MLSS = 1500 mg/l ± 290, (b) SVI = 90 ± 28, and (c) mean air flow = 0.012 cu m/l influent ± 0.003 (1.6 cu ft/gal ± 0.4); with the following assumptions: (a) hazardous materials pass unaffected through primary treatment and (b) spill duration is 1 hr.

TABLE 13. (continued)

A. STUDY NUMBER B. SPILLED MATERIAL C. DESIGN SPILL CONCENTRATION* D. ACTUAL SPILL CONCENTRATION* E. SPILL DURATION F. PROPORTIONATE SPILL TO FULL-SCALE FACILITY +	PARAMETER	EFFECT	REMARKS
A. No. 5-1 B. Phenol C. 500 mg/l D. 600 mg/l E. 30 min. F. 26,000 lb. phenol (31,000 lb. **)	BOD	Maximum effluent BOD of greater than 75 mg/l occurred from 2 to 4 hr. after spill then effluent BOD decreased to pre-spill levels within 21 hr. after the spill.	Results indicated that soluble phenol passed through the activated sludge process; some removal occurred but the activated sludge process was not adversely affected.
	COD	Maximum effluent COD of 140 mg/l occurred 2 hr. after spill. Pre-spill levels were re-established 10 hr. after the spill.	
	SS	Effluent SS concentrations after the spill never returned to pre-spill levels but influent SS also increased substantially.	
	Turbidity	Effluent turbidity not affected.	
	Phenol	Maximum effluent phenol concentration of 27 mg/l occurred 2.5 hr. after the spill. Pre-spill levels were re-established within 10 hr. after the spill.	

* In the mixed liquor.

\+ Based on hypothetical flow of 150 MGD in a full-scale plant and the following conditions in the secondary treatment plant: (a) mean MLSS = 1500 mg/l ± 290, (b) SVI = 90 ± 28, and (c) mean air flow = 0.012 cu m/l influent ± 0.003 (1.6 cu ft/gal ± 0.4); with the following assumptions: (a) hazardous materials pass unaffected through primary treatment and (b) spill duration is 1 hr.

** Proportionate spill to FSP facility based on "D" - actual spill concentration.

TABLE 13. (continued)

A. STUDY NUMBER B. SPILLED MATERIAL C. DESIGN SPILL CONCENTRATION* D. ACTUAL SPILL CONCENTRATION* E. SPILL DURATION F. PROPORTIONATE SPILL TO FULL-SCALE FACILITY +	PARAMETER	EFFECT	REMARKS
A. No. 5-2 B. Phenol C. 600 mg/l D. 600 mg/l E. 30 min. F. 31,000 lb. phenol Note: Pilot plant operation was modified to permit increased contact of the phenol-contaminated influent with the activated sludge by increasing both the retention time and the MLSS concentration.	BOD	Maximum effluent BOD of less than 130 mg/l occurred 4.5 hr. after the spill. From 5 to 29 hr. after the spill effluent BOD fluctuated at 40 to 45 mg/l after which it decreased to 20 mg/l or less.	The operational modification consisted of routing the influent to tank 1 instead of tank 2 for 24 hr. after which it was returned to tank 2. This increased the retention time from 2.1 hr. to 2.8 hr. and contacted the contaminated influent with 4000 mg/l MLSS in tank 1. The operational modification served to degrade the effluent beyond that resulting from phenol alone (determined by comparing results of Studies No. 5-1 and 5-2). Possibly a short term (a few hours) routing of influent to tank 1 rather than for 24 hr. would serve to minimize the phenol passed through the system.
	COD	Maximum effluent COD of 200 mg/l occurred 3.5 to 4 hr. after the spill. It thereafter decreased to pre-spill levels in 45 hr.	
	SS	Effluent SS increased from pre-spill levels of 10 mg/l to greater than 70 mg/l in 9 hr. following spill. It then decreased; pre-spill efficiencies were regained 29 hr. after the spill.	
	Turbidity	Maximum effluent turbidity of 36 Hellige units occurred 1.5 hr. after spill. It then decreased slowly with pre-spill efficiencies regained 29 hr. after the spill.	
	Phenol	Peak effluent phenol level of 42 mg/l occurred 1 hr. after the spill. Pre-spill levels were achieved 37 hr. after the spill.	

* In the mixed liquor.

\+ Based on a hypothetical flow of 150 MGD in a full-scale plant and the following conditions in the secondary treatment plant: (a) mean MLSS = 1500 mg/l ± 290, (b) SVI = 90 ± 28, and (c) mean air flow = 0.012 cu m/l influent ± 0.003 (1.6 cu ft/gal ± 0.4); with the following assumptions: (a) hazardous materials pass unaffected through primary treatment and (b) spill duration is 1 hr.

TABLE 13. (continued)

A. STUDY NUMBER B. SPILLED MATERIAL C. DESIGN SPILL CONCENTRATION* D. ACTUAL SPILL CONCENTRATION* E. SPILL DURATION F. PROPORTIONATE SPILL TO FULL-SCALE FACILITY +	PARAMETER	EFFECT	REMARKS
A. No. 6-1 B. Ammonium chloride C. 500 mg/l D. - E. 60 min. F. 26,000 lb. ammonium chloride	BOD	Removal efficiency decreased to a minimum of 54% 5 to 9 hr. after the spill and returned to pre-spill efficiencies 13 hr. after the spill. Peak effluent BOD was about 45 mg/l.	There was only slight short term effect on treatment plant efficiency. The peak effluent chloride concentration of 275 mg/l occurred 4 hr. after the spill and returned to pre-spill levels of about 100 mg/l 13 hr. after the spill.
	COD	Removal efficiency was not affected.	
	SS	Removal efficiency decreased to 39% 3.5 hr. after the spill and pre-spill efficiencies were re-established 21 hr. after the spill. Peak effluent SS was less than 35 mg/l.	
	Turbidity	There was no significant effect on effluent turbidity which increased to a peak of 12 Hellige units 3.5 to 9 hr. after the spill.	
	Nitrogen	Effluent ammonia and total Kjeldahl nitrogen concentrations returned to pre-spill levels 9 to 13 hr. after the spill. The peak ammonia level of 35 mg/l occurred 3 hr. after the spill. Pre-slug removal efficiencies were typical for secondary biological systems.	

* In the mixed liquor.

\+ Based on a hypothetical flow of 150 MGD in a full-scale plant and the following conditions in the secondary treatment plant: (a) mean MLSS = 1500 mg/l ± 290, (b) SVI = 90 ± 28, and (c) mean air flow = 0.012 cu m/l influent ± 0.003 (1.6 cu ft/gal ± 0.4); with the following assumptions: (a) hazardous materials pass unaffected through primary treatment and (b) spill duration is 1 hr.

TABLE 13. (continued)

A. STUDY NUMBER B. SPILLED MATERIAL C. DESIGN SPILL CONCENTRATION* D. ACTUAL SPILL CONCENTRATION* E. SPILL DURATION F. PROPORTIONATE SPILL TO FULL-SCALE FACILITY+	PARAMETER	EFFECT	REMARKS
A. No. 7-1 B. Copper (from cupric sulfate pentahydrate) C. 100 mg/l D. 81 mg/l dissolved Cu E. 30 min. F. 5200 lb. Cd (4200 lb. dissolved Cd**)	BOD	The minimum BOD removal efficiency of 45% occurred 5 hr. after the spill. Typical removals were re-established 21 hr. after the spill.	This study was designed to investigate the effects of returning copper-ladened activated sludge to the aeration tanks. Copper was taken up rapidly by the activated sludge but was released relatively slowly. The maximum Cu concentration of 5 mg Cu/g MLSS in the activated sludge occurred within 13 hr. after the spill and was about 5 times the normal level. After 5 days the Cu concentration in the mixed liquor was about 3 times the normal level.
	COD	COD removal efficiency decreased to slightly less than typical when a minimum of 50 to 60% occurred for 5 hr. Peak effluent COD was about 80 mg/l 4.5 hr. after the spill.	
	SS	Removal efficiency dropped to zero 5 hr. after the spill and typical efficiencies were re-established about 37 hr. after the spill. Peak effluent SS were about 40 mg/l.	
	Turbidity	The peak effluent turbidity of 29 Hellige units occurred 3 hr. after the spill; the minimum removal efficiency was 8%. Pre-slug efficiencies were re-established 29 hr. after the spill.	
	Copper	The maximum effluent copper concentration of 1.2 mg/l occurred 3.5 hr. after the spill It then decreased throughout the remainder of the study and after 5 days was about 0.09 mg/l, twice pre-spill levels.	

* In the mixed liquor.

\+ Based on a hypothetical flow of 150 MGD in a full-scale plant and the following conditions in the secondary treatment plant: (a) mean MLSS = 1500 mg/l ± 290, (b) SVI = 90 ± 28, and (c) mean air flow = 0.012 cu m/l influent ± 0.003 (1.6 cu ft/gal ± 0.4); with the following assumptions: (a) hazardous materials pass unaffected through primary treatment and (b) spill duration is 1 hr.

** Proportionate spill to FSP facility based on "D" - actual spill concentration.

TABLE 13. (continued)

A. STUDY NUMBER B. SPILLED MATERIAL C. DESIGN SPILL CONCENTRATION* D. ACTUAL SPILL CONCENTRATION* E. SPILL DURATION F. PROPORTIONATE SPILL TO FULL-SCALE FACILITY+	PARAMETER	EFFECT	REMARKS
A. No. 8-1 B. Unneutralized scrubber water from the ALCOSAN incinerator stack gas wet scrubbers. C. 0.01 gal. scrubber water per gal. influent D. - E. 24 hr. F. Recirculation of 63,000 gal. of scrubber water per hr.	BOD	Removal efficiency fluctuated at 65 to 80% during the 24 hr. spill and recovered to 80 to 85% immediately after the spill ceased.	Unneutralized scrubber water was added to the pilot plant influent for 24 hr. The scrubber water had no effect on plant performance when added to the influent at a rate proportional to the flow from 3 scrubbers entering the full-scale plant. Scrubber water had the following characteristics: pH - 4.6 TS - 862 mg/l BOD - 10 mg/l TVS - 204 mg/l COD - 59 mg/l turbidity -33 Hellige units acidity - 109 mg/l SS - 43 mg/l TKN - 23.6 mg/l VSS - 24 mg/l NH_3-N - 20.3 mg/l metals - total/dissolved (mg/l): lead - 2.67/0.84 manganese - 1.00/0.55 chromate - 1.00/0.06 iron - 4.04/1.05 nickel - 0.12/0.04 cadmium - 0.73/0.74 zinc - 13.83/15.00 copper - 0.87/0.80
	COD	No adverse effect on removal efficiency.	
	SS	No adverse effect on removal efficiency.	
	Turbidity	No adverse effect on effluent turbidity.	
	pH	Although scrubber water had an average pH of 4.6, effluent pH was not affected.	
	Nitrogen	Ammonia and Kjeldahl nitrogen removal efficiencies were typical for the activated sludge process.	

* In the mixed liquor.

\+ Based on a hypothetical flow of 150 MGD in a full-scale plant and the following conditions in the secondary treatment plant: (a) mean MLSS = 1500 mg/l ± 290, (b) SVI = 90 ± 28, and (c) mean air flow = 0.012 cu m/l influent ± 0.003 (1.6 cu ft/gal ± 0.4); with the following assumptions: (a) hazardous materials pass unaffected through primary treatment and (b) spill duration is 1 hr

TABLE 13. (continued)

A. STUDY NUMBER B. SPILLED MATERIAL C. DESIGN SPILL CONCENTRATION* D. ACTUAL SPILL CONCENTRATION* E. SPILL DURATION F. PROPORTIONATE SPILL TO FULL-SCALE FACILITY +	PARAMETER	EFFECT	REMARKS
A. No. 9-1 B. Sulfuric acid "pickle liquor" C. 5.6 ml "pickle liquor" per liter influent D. - E. 60 min. F. 35,000 gal."pickle liquor"	BOD	Removal efficiency and effluent BOD were not affected.	The low pH and high heavy metal content of the pickle liquor did not adversely affect plant performance. The activated sludge did show some uptake of iron reaching a maximum concentration of 24.6 mg Fe/gMLSS 13 hr. after the spill (pre-spill content averaged 21.0 mg Fe/gMLSS). The sulfuric acid pickle liquor had the following characteristics: pH - <1.0 acidity - 399,600 mg/l COD - 4,580 mg/l TS - 182,000 mg/l TVS - 109,000 mg/l SS - 154 mg/l VSS - 82 mg/l chlorides - 851 mg/l cyanide - none detected Total heavy metals (mg/l) cadmium - 0.05 mg/l chromium - 46 mg/l copper - 3.20 mg/l lead - 14 mg/l manganese - 214 mg/l nickel - 33.30 mg/l iron - 29,200 mg/l zinc - 430 mg/l
	COD	Removal efficiency and effluent COD were not affected.	
	SS	Removal efficiency and effluent SS were not affected.	
	Turbidity	Turbidity removal decreased to 76% 5 hr. after the spill but typical efficiencies (79 to 91%) were re-established in 8 hr.	
	pH	Effluent pH was not affected.	
	Iron	The peak effluent iron concentration of 2.36 mg/l occurred 3.5 hr. after the spill; within 1.5 hr. effluent concentrations had returned to approximately pre-spill levels.	

* In the mixed liquor.

\+ Based on a hypothetical flow of 150 MGD in a full-scale plant and the following conditions in the secondary treatment plant: (a) mean MLSS = 1500 mg/l ± 290, (b) SVI = 90 ± 28, and (c) mean air flow = 0.012 cu m/l influent ± 0.003 (1.6 cu ft/gal ± 0.4); with the following assumptions: (a) hazardous materials pass unaffected through primary treatment and (b) spill duration is 1 hr.

TABLE 13. (continued)

A. STUDY NUMBER B. SPILLED MATERIAL C. DESIGN SPILL CONCENTRATION* D. ACTUAL SPILL CONCENTRATION* E. SPILL DURATION F. PROPORTIONATE SPILL TO FULL-SCALE FACILITY+	PARAMETER	EFFECT	REMARKS
A. No. 10-1 B. No. 2 fuel oil C. 0.8% of pilot plant influent flow rate (8 ml/l) D. - E. 60 min. F. 50,000 gal. fuel oil	BOD	The peak effluent BOD of about 550 mg/l occurred 3.5 hr. after the spill. During most of the study effluent BOD concentration was equal to or exceeded influent BOD.	The fuel oil spill significantly affected treatment plant performance with organics, soluble and insoluble, being discharged in the effluent.
	COD	The peak effluent COD of about 200 mg/l occurred 3.5 hr. after the spill. Removal efficiency dropped to zero 3 hr. after the spill; 6 hr. later it improved to 58% and fluctuated between 40 and 60% throughout the remainder of the study.	After 48 hr. the spill system had not begun to perform as normal. No data are available on the oil content of the activated sludge. The COD analysis was not adequate for measuring the influent and effluent COD when oil was present; on numerous occasions BOD exceeded the COD.
	SS	Effluent SS increased to 56 mg/l 3.5 hr. after the spill and fluctuated between 30 to 40 mg/l throughout the remainder of the study. Removal efficiency steadily dropped reaching zero 21 hr. after the spill; afterwards it improved to 40 to 50%.	The oil tended to float on the aeration and sedimentation tanks and thus passed through the system. It is felt that scum skimmers on primary sedimentation tanks would reduce greatly the oil getting to the biological treatment phase.
	Turbidity	Effluent turbidity steadily increased during the study and equalled influent turbidity 37 hr. after the spill.	
	pH	Effluent pH was not affected.	

* In the mixed liquor.

\+ Based on a hypothetical flow of 150 MGD in a full-scale plant and the following conditions in the secondary treatment plant: (a) mean MLSS = 1500 mg/l ± 290, (b) SVI = 90 ± 28, and (c) mean air flow = 0.012 cu m/l influent ± 0.003 (1.6 cu ft/gal ± 0.4); with the following assumptions: (a) hazardous materials pass unaffected through primary treatment and (b) spill duration is 1 hr.

TABLE 13. (continued)

A. STUDY NUMBER B. SPILLED MATERIAL C. DESIGN SPILL CONCENTRATION* D. ACTUAL SPILL CONCENTRATION* E. SPILL DURATION F. PROPORTIONATE SPILL TO FULL-SCALE FACILITY +	PARAMETER	EFFECT	REMARKS
A. No. 11-1 B. Tetrachloroethylene (perchloroethylene) C. 1600 mg/l D. - E. 60 min. F. 6200 gal. of tetrachloroethylene	BOD	Removal efficiency was not significantly affected until 21 hr. after the spill when it decreased and fluctuated between 30 to 40% for the remainder of the study. Maximum effluent BOD or 80 mg/l occurred 21 hr. after the spill.	The effects of tetrachloroethylene were noted after a lag period of 4.5 to 20 hr. depending upon the parameter. These effects were not drastic but they were significant. Because the chemical is heavier than water it may have persisted in the system.
	COD	Removal efficiency fluctuated considerably (between 51 and 84%) but reached a minimum of 51% 21 hr. after the spill.	The pilot plant activated sludge system was operating at less than peak efficiency prior to the chemical spill and the system may have been more susceptible to upsets.
	SS	4.5 hr. after the spill effluent SS began to increase steadily reaching a maximum of 79 mg/l 37 to 45 hr. after the spill.	Effluent turbidity remained constant throughout the study even though effluent SS concentration increased greatly; this can probably be attributed to sampling and analytical error in preparation of the samples for turbidity analysis. For several days following termination of this study the pilot plant continued to perform at less than peak efficiency. Wasting large quantities of activated sludge was necessary before efficient performance was regained.

* In the mixed liquor.

\+ Based on a hypothetical flow of 150 MGD in a full-scale plant and the following conditions in the secondary treatment plant: (a) mean MLSS = 1500 mg/l ± 290, (b) SVI = 90 ± 28, and (c) mean air flow = 0.012 cu m/l influent ± 0.003 (1.6 cu ft/gal ± 0.4); with the following assumptions: (a) hazardous materials pass unaffected through primary treatment and (b) spill duration is 1 hr.

TABLE 14

PILOT PLANT OPERATING CONDITIONS

Hazardous Material Study	Waste Activated Sludge (WAS)**		Sampling Schedule	Parameters Analyzed
	Kg dry solids	Ratio WAS to Return Sludge	Influent and Effluent	Influent and Effluent
1-1	0	0	2 hr. composites from 2 hr. prior to spill to 48 hr. after.	I*, nitrite, nitrate, not turbidity
1-2	0.14	0.01	One, 2 hr. composite prior to spill, 15 min. composites to 4 hr. after spill, 4 hr. composites to 48 hr. after spill.	I*
2-2	0	0	II*	I*
3-1	0	0	II*, III*	I*
4-1	0.64	0.06	II*, III*	I*
5-1	2.04	0.10	II*, III*	I*, phenol
5-2	3.04	0.20	II*, III*	I*, phenol
6-1	1.54	0.07	II*, III*	I*, chloride
7-1	0.86	0.04	III*, but 8 hr. composite to 109 hr. after spill; II*	I*

See footnotes at end of table.

TABLE 14. (continued)

Hazardous Material Study	Waste Activated Sludge (WAS)**		Sampling Schedule	Parameters Analyzed
	Kg dry solids	Ratio WAS to Return Sludge	Influent and Effluent	Influent and Effluent
8-1	2.54	0.12	4 hr. composites 8 hr. prior to spill, 2 hr. composites to 8 hr. after, 8 hr. composites to 64 hr. after. 2 hr. composites of influent upstream from spill during and for 2 hr. after spill.	I*
9-1	0.91	0.04	II*, III*	I*, chloride
10-1	0.86	0.04	II*, III*	I*, grease
11-1	1.59	0.07	II*, III*	I*

* I. Standard analyses were: BOD, COD, SS, VSS, TS, TVS, alkalinity, pH, total Kjeldahl nitrogen, ammonia nitrogen, turbidity, and dissolved and total load, manganese, chromium, iron, nickel, cadmium, zinc, copper.

II. The influent upstream of the spill was sampled using 30 min. composites for 30 min. prior to spill and for 2 hr. after spill.

III. 30 min. influent and effluent composites for 2 hr. before spill and 5 hr. after, 4 hr. composites to 13 hr. after, and 8 hr. composites to 53 hr. after spill.

** Studies were at a mean MLSS of 1550 mg/l with a standard deviation of 290; mean SVI with a standard deviation of 28. and a mean air flow of 0.012 cu m/l influent with a standard deviation of 0.003 (1.6 cu ft/gal with a standard deviation of 0.4).

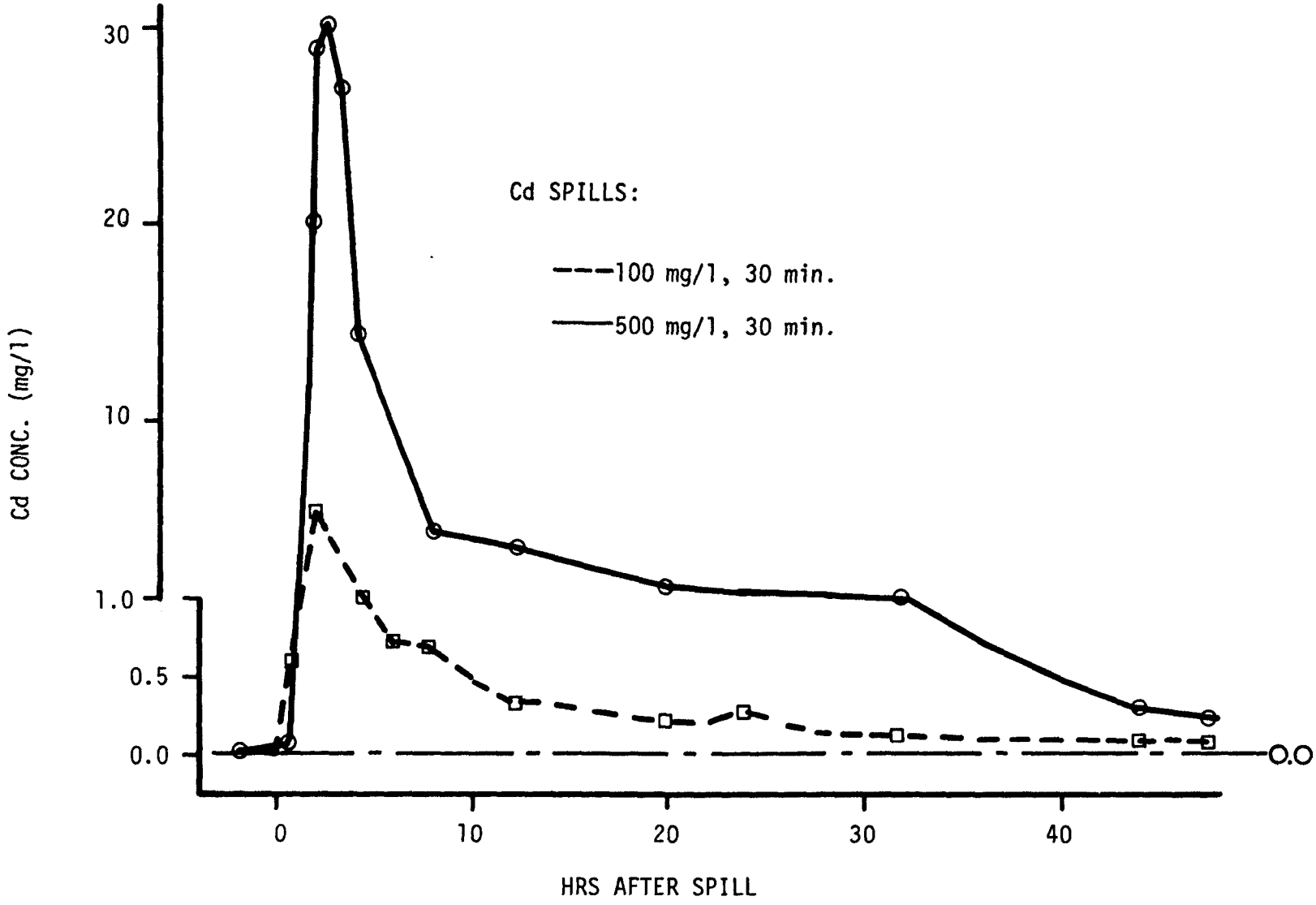

FIGURE 3. EFFLUENT CADMIUM

TABLE 15

INFLUENT AND EFFLUENT CADMIUM DATA, STUDY NO. 1-1, CADMIUM (100 mg/l Spill)*

Hours After Spill	Total Cadmium (mg/l)	
	Influent	Effluent
Prior to spill	0.04	0.03
0.00	0.04	0.01
0.25	83.00	--
2.00	0.04	5.40
4.00	0.02	1.64
6.00	0.03	0.74
8.00	0.01	0.67
10.00	0.01	0.48
12.00	0.03	0.35
14.00	0.03	0.34
16.00	0.04	0.28
18.00	0.03	0.25
20.00	0.03	0.22
22.00	0.02	0.20
24.00	0.03	0.28
26.00	0.04	0.19
28.00	0.04	0.14
30.00	0.03	0.13
32.00	0.03	0.13
34.00	0.03	0.11
36.00	0.03	0.11
38.00	0.03	0.11
40.00	0.03	0.11
42.00	0.03	0.10
44.00	0.03	0.10
46.00	0.03	0.11
48.00	0.03	0.09

* 100 mg/l (influent) spill for ½ hour

TABLE 16

INFLUENT AND EFFLUENT TOTAL CADMIUM DATA, STUDY NO. 1-2, CADMIUM (500 mg/l Spill)*

Hours After Spill	Total Cadmium (mg/l)	
	Influent	Effluent
Prior to spill	0.04	0.03
0.00	0.38	0.07
0.25	528.00	0.08
0.50	280.00	0.07
0.75	1.11	0.16
1.00	2.90	1.24
1.25	1.78	5.90
1.50	0.19	11.40
1.75	0.45	19.40
2.00	0.52	25.20
2.25	0.63	28.80
2.50	0.11	29.80
2.75	0.32	28.80
3.00	0.27	27.20
3.25	0.00	26.80
3.50	0.04	22.40
3.75	0.42	19.20
4.00	0.19	14.80
8.00	0.29	4.40
12.00	0.14	3.60
16.00	0.76	2.60
20.00	0.10	1.69
24.00	0.08	1.38
28.00	0.09	1.24
32.00	0.08	1.02
36.00	0.10	0.71
40.00	0.09	0.49
44.00	0.09	0.31
48.00	0.07	0.25

*500 mg/l (influent) spill for ½ hour

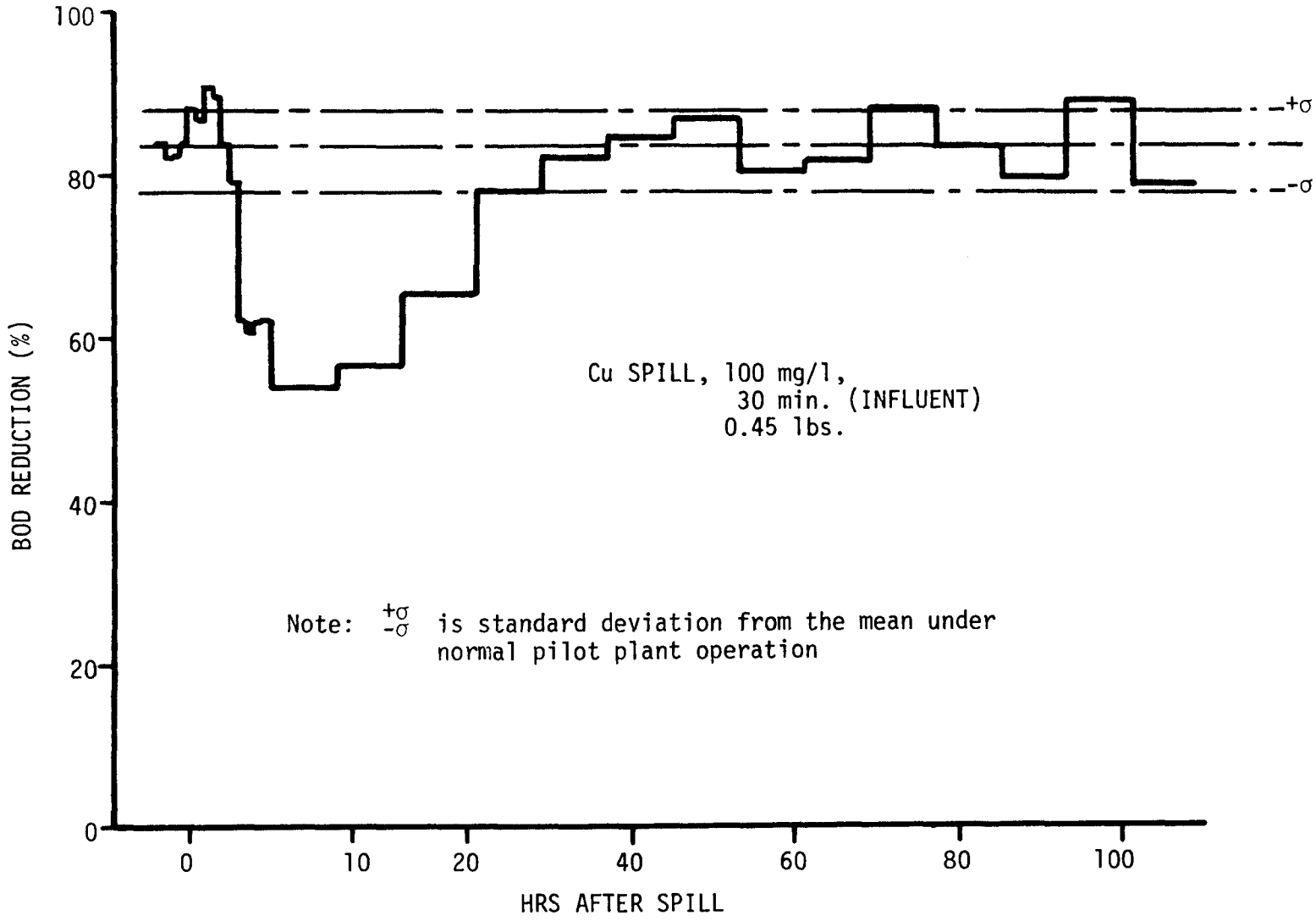

FIGURE 4. BOD REDUCTION STUDY NO. 7-1

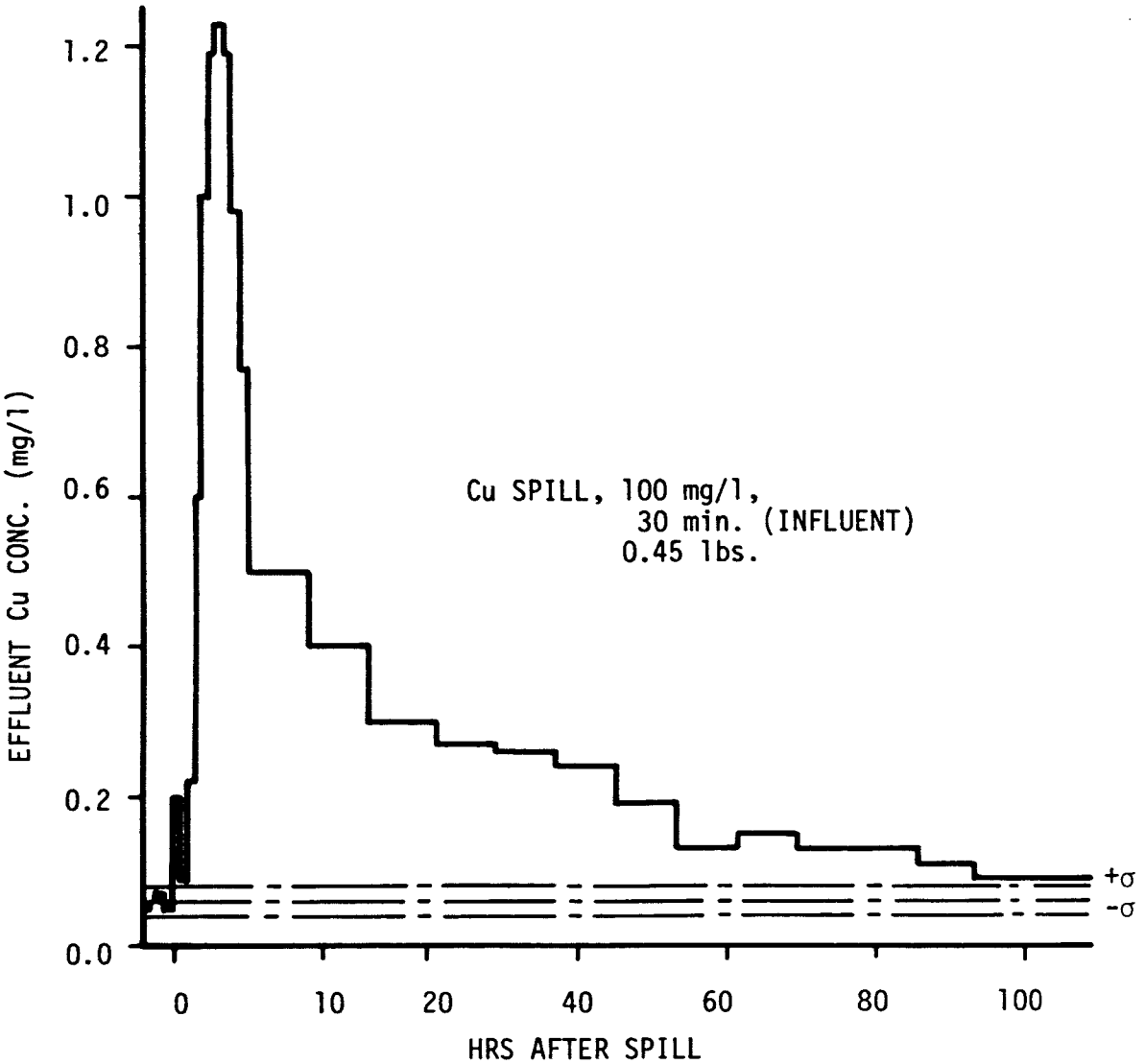

Note: $^{+\sigma}_{-\sigma}$ is standard deviation from the mean under normal pilot plant operation

FIGURE 5. COPPER IN EFFLUENT, STUDY NO. 7-1

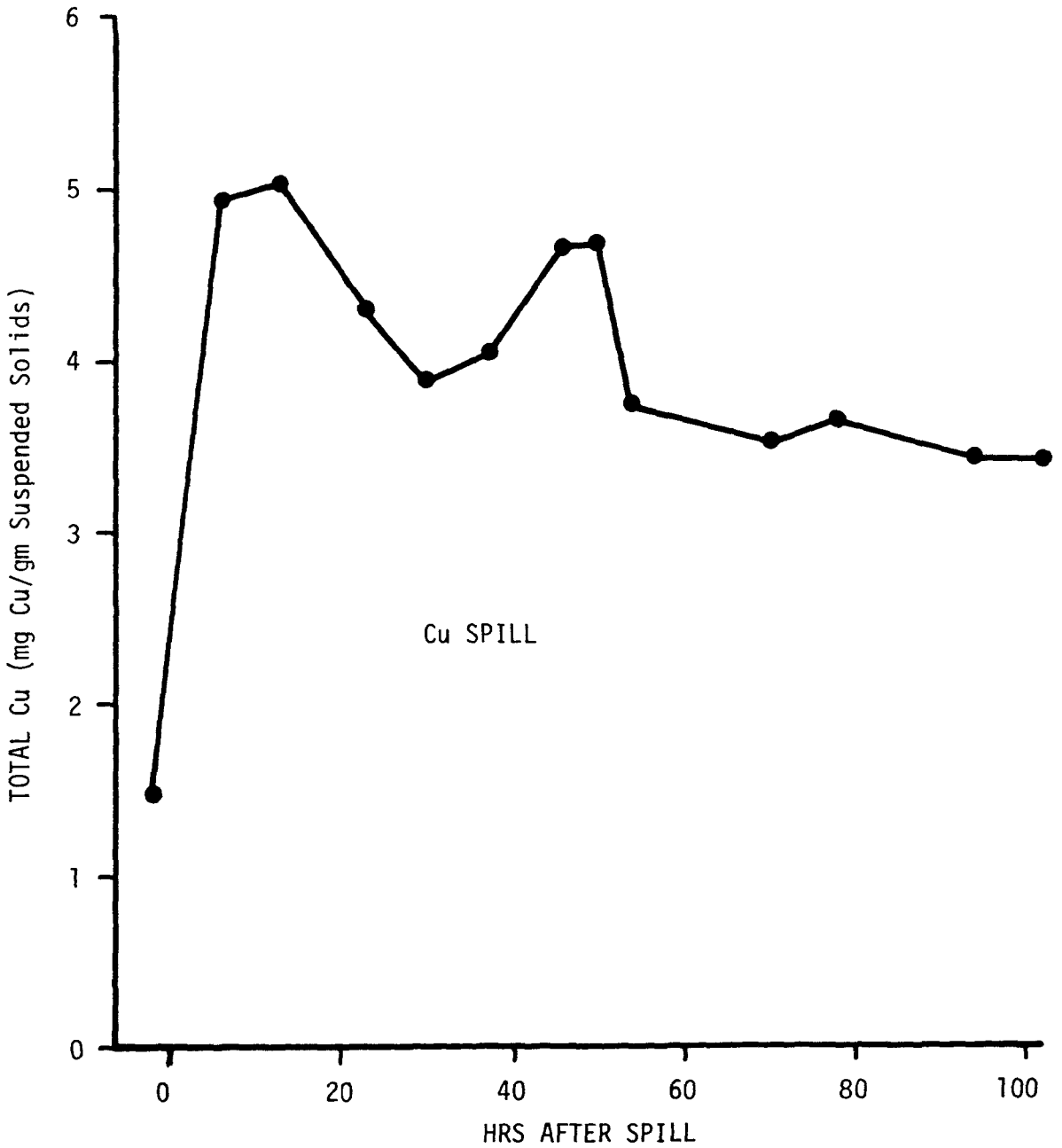

FIGURE 6. TOTAL COPPER IN THE SLUDGE

TABLE 17

BOD AND TOTAL COPPER DATA, STUDY NO. 7-1, COPPER
(100 mg/l Spill)**

Hours After Spill	BOD			Copper (mg/l)	
(Before)	Influent (mg/l)	Effluent (mg/l)	% Reduction	Influent	Effluent
Prior to spill					
2.0-1.5	89	14	84	0.12	0.05
1.5-1.0	82	15	82	0.12	0.06
1.0-0.5	78	14	82	0.12	0.07
0.5-0.0	77	12	84	0.12	0.05
During spill					
0.0-0.5	30	10	67	113.20	0.20
After spill					
0.5-1.0	75	10	87	2.50	0.09
1.0-1.5	118	11	91	0.50	0.22
1.5-2.0	106	11	90	0.31	0.60
2.0-2.5	100	16	84	0.24	1.00
2.5-3.0	129	27	79	0.21	1.19
3.0-3.5	121	46	62	0.17	1.23
3.5-4.0	117	46	61	0.33	1.19
4.0-4.5	113	43	62	0.18	0.98
4.5-5.0	119	45	62	0.19	0.77
5.0-9.0	98	45	54	0.20	0.50
9.0-13.0	104	45	57	0.23	0.40
13.0-21.0	104	36	65	0.19	0.30
21.0-29.0	87	19	78	0.20	0.27
29.0-37.0	105	19	82	0.14	0.26
37.0-45.0	106	16	85	ND*	ND*
45.0-53.0	86	11	87	0.20	0.19
53.0-61.0	112	22	80	0.17	0.13
61.0-69.0	104	19	82	0.13	0.15
69.0-77.0	78	9	88	0.13	0.13
77.0-85.0	100	16	84	0.14	0.13
85.0-93.0	75	15	80	0.12	0.11
93.0-101.0	66	7	89	0.13	0.09
101.0-109.0	88	18	80	0.12	0.09

* No Data
** 100 mg/l (influent) spill for ½ hour

TABLE 18

UPTAKE OF COPPER BY ACTIVATED SLUDGE

Hours After Spill	Total Copper in the Activated Sludge (mg Cu/gm SS)*
-2+	1.45
6	4.92
13	5.03
22	4.28
30	3.87
37	4.02
46	4.65
50	4.67
54	3.71
70	3.51
78	3.64
94	3.42
102	3.43

* Average copper content of the activated sludge in tanks 1, 2, 3, 4 and return sludge (milligrams copper per gram suspended solids).

+ Two hours before spill.

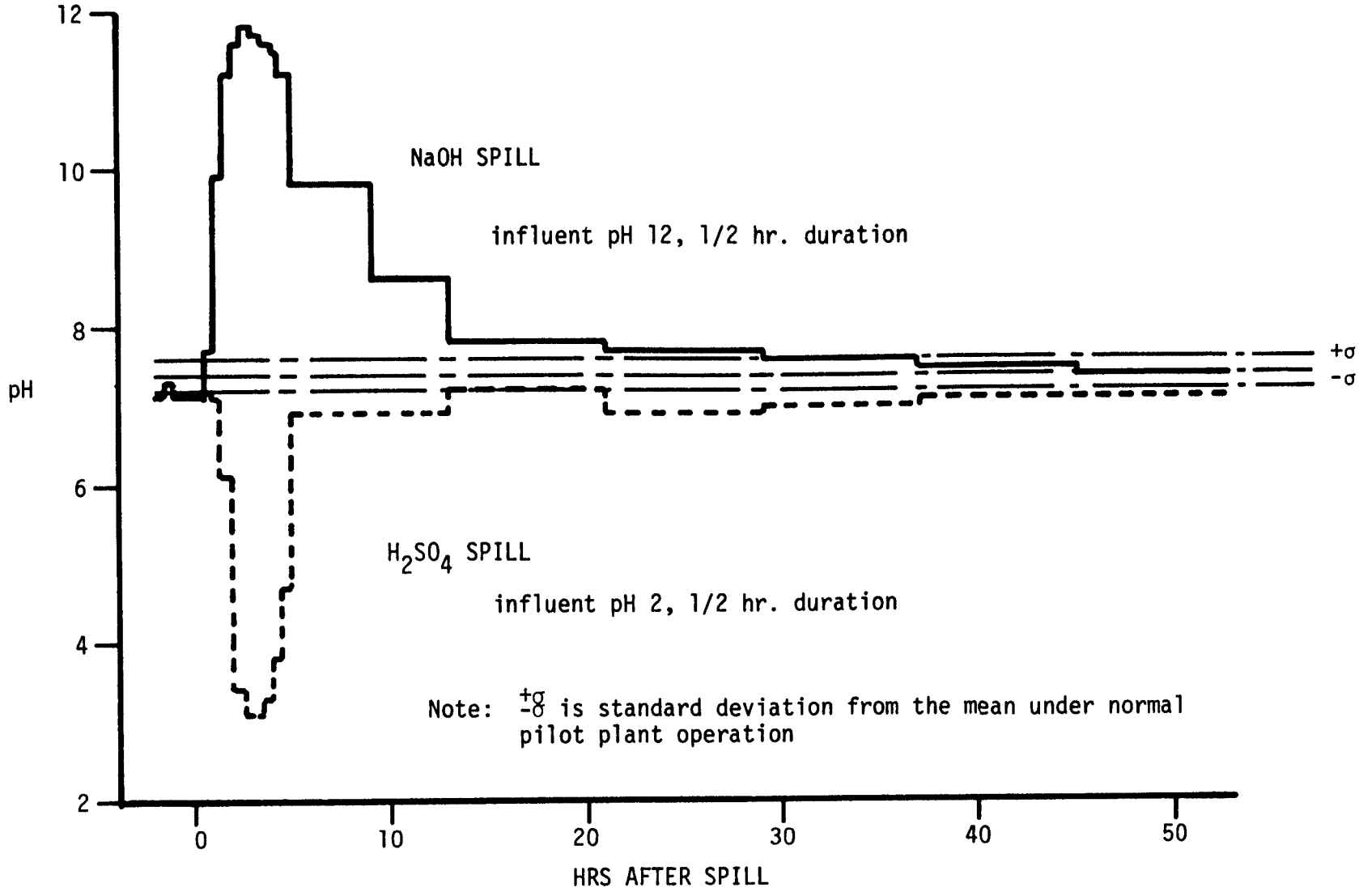

FIGURE 7. EFFECT ON EFFLUENT pH, SULFURIC ACID AND SODIUM HYDROXIDE STUDY NOS. 2-2 AND 3-1

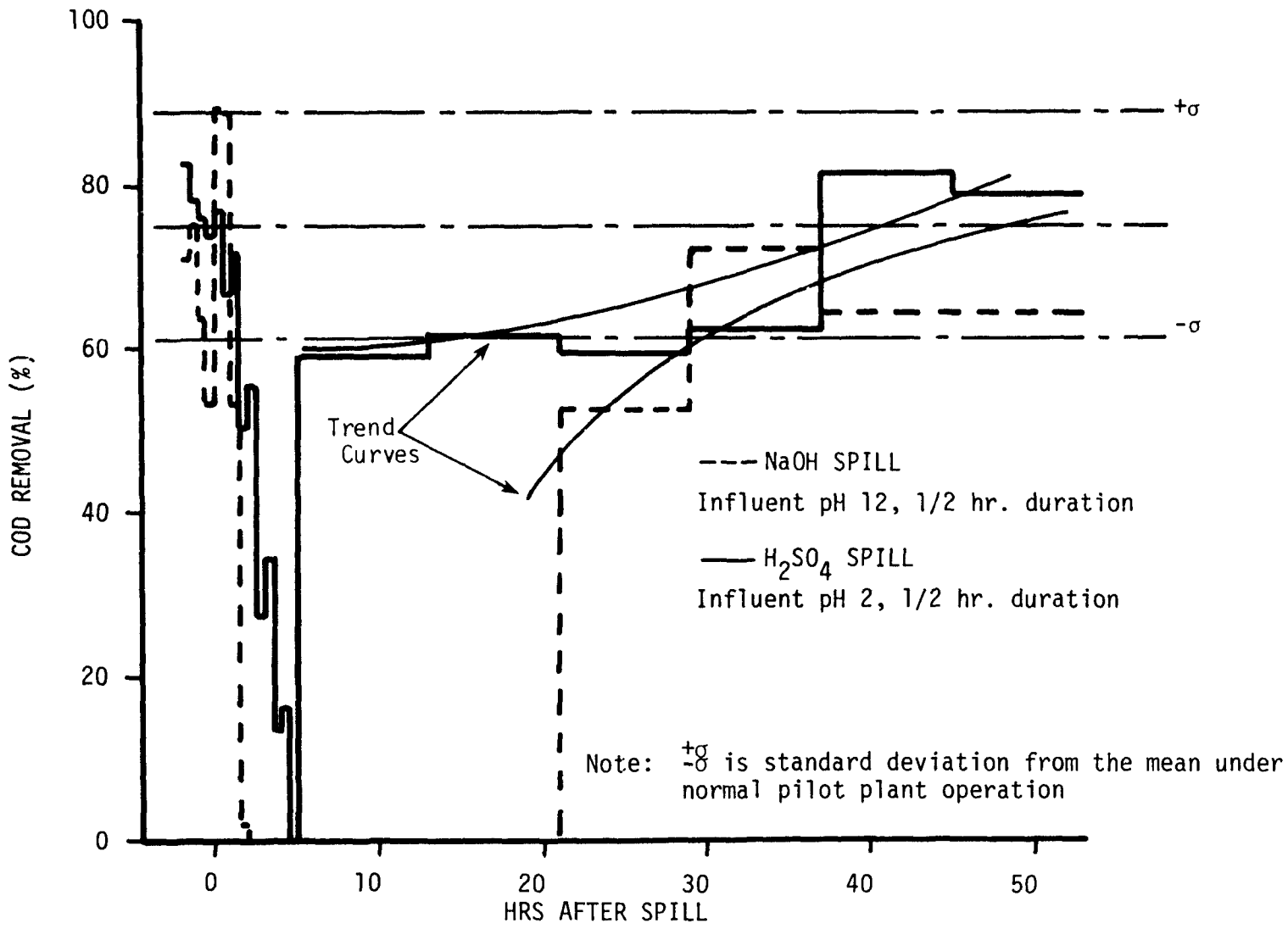

FIGURE 8. EFFECT ON COD REMOVAL, SULFURIC ACID AND HYDROGEN PEROXIDE STUDY NOS. 2-2 AND 3-1

TABLE 19

pH AND COD DATA, STUDY NO. 2-2, SULFURIC ACID

(pH = 2.0)

Hours After Spill	pH		COD		
(Before)	Influent	Effluent	Influent (mg/l)	Effluent (mg/l)	% Reduction
Prior to spill					
(2.0-1.5)	7.1	7.2	161	28	83
(1.5-1.0)	7.2	7.3	165	36	78
(1.0-0.5)	7.0	7.1	133	32	76
(0.5-0.0)	7.1	7.2	137	36	74
During spill					
0.0-0.5	2.0	7.2	242	56	77
After spill					
0.5-1.0	1.9	7.2	202	67	67
1.0-1.5	7.0	7.1	155	44	72
1.5-2.0	7.0	6.1	143	71	50
2.0-2.5	6.8	3.4	186	83	55
2.5-3.0	7.1	3.1	186	135	27
3.0-3.5	7.1	3.1	230	151	34
3.5-4.0	7.0	3.3	198	171	14
4.0-4.5	7.2	3.8	214	179	16
4.5-5.0	7.2	4.7	203	219	+8*
5.0-13.0	7.1	6.9	243	100	59
13.0-21.0	7.2	7.2	187	72	61
21.0-29.0	6.7	6.9	108	44	59
29.0-37.0	7.0	7.0	127	48	62
37.0-45.0	7.1	7.1	147	27	82
45.0-53.0	7.1	7.1	145	31	78

* Increase instead of reduction

TABLE 20

pH AND COD DATA, STUDY NO. 3-1, SODIUM HYDROXIDE
(pH=12.0)

Hours After Spill	pH		COD		
(Before)	Influent	Effluent	Influent (mg/l)	Effluent (mg/l)	%Reduction
Prior to spill					
(2.0-1.5)	7.1	7.1	149	43	71
(1.5-1.0)	7.1	7.2	141	35	75
(1.0-0.5)	7.2	7.2	141	51	64
(0.5-0.0)	7.1	7.1	141	66	53
During spill					
0.0-0.5	12.6	7.1	453	47	90
After spill					
0.5-1.0	12.6	7.7	322	35	89
0.0-1.5	8.4	9.9	132	62	53
1.5-2.0	7.6	11.2	178	174	2
2.0-2.5	7.4	11.6	205	295	+44*
2.5-3.0	7.5	11.8	204	325	+59*
3.0-3.5	8.0	11.7	223	376	+69*
3.5-4.0	7.5	11.6	235	345	+47*
4.0-4.5	7.6	11.5	208	333	+60*
4.5-5.0	7.5	11.2	208	321	+54*
5.0-9.0	7.5	9.8	259	335	+29*
9.0-13.0	7.3	8.6	232	295	+27*
13.0-21.0	7.2	7.8	122	169	+38*
21.0-29.0	7.2	7.7	142	67	53
29.0-37.0	7.3	7.6	197	55	72
37.0-45.0	7.2	7.5	177	63	64
45.0-53.0	7.1	7.4	165	59	64

* Increase instead of reduction

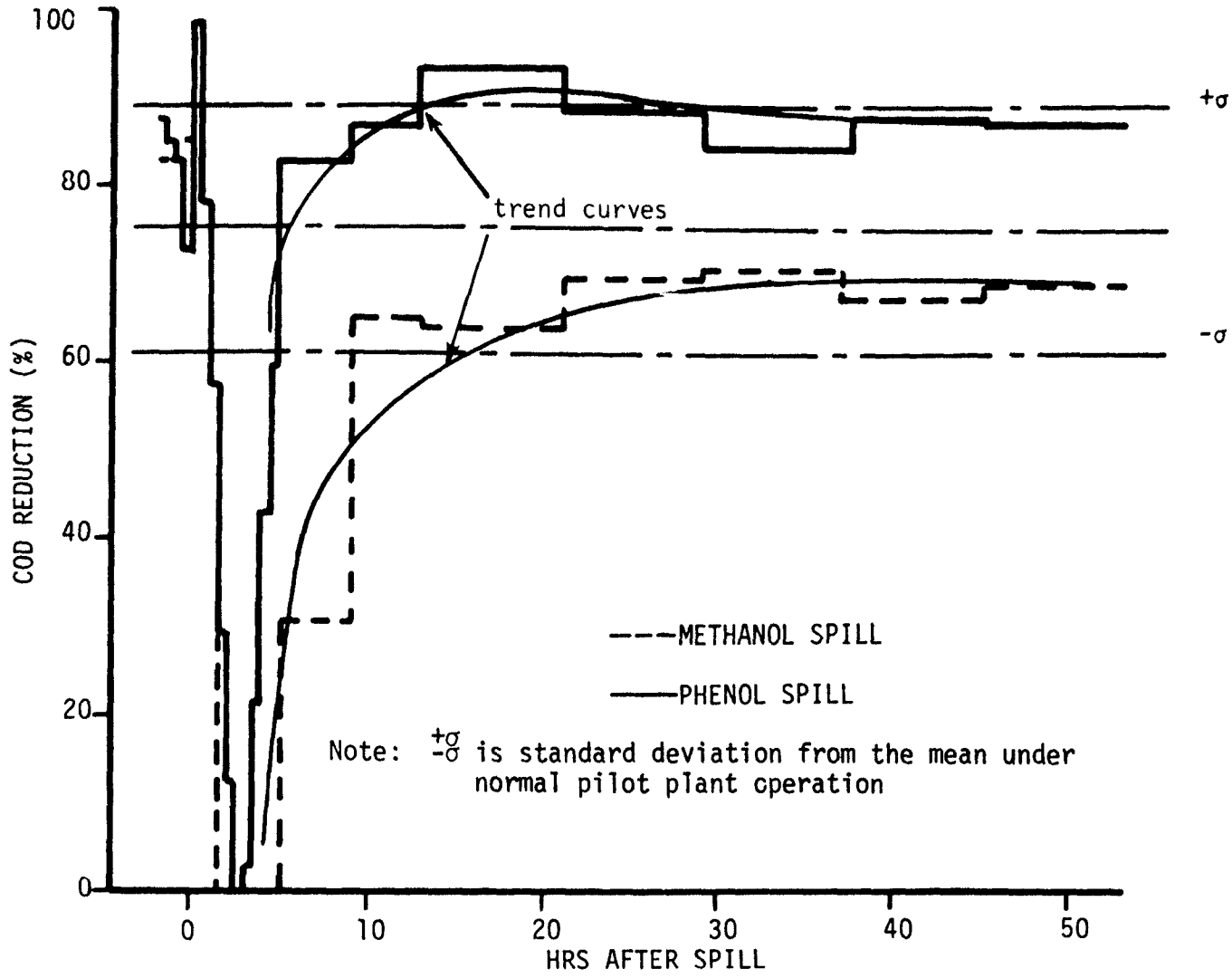

FIGURE 9. COD REDUCTION, METHANOL AND PHENOL
STUDY NOS. 4-1 AND 5-1

TABLE 21

COD DATA, STUDY NO. 4-1 AND 5-1, METHANOL AND PHENOL

Hours After Spill	Methanol Spill, COD			Phenol Spill, COD		
(Before)	Influent (mg/l)	Effluent (mg/l)	% Reduction	Influent (mg/l)	Effluent (mg/l)	% Reduction
Prior to spill						
(2.0-1.5)	180	31	83	165	20	88
(1.5-1.0)	157	27	83	161	24	85
(1.0-0.5)	ND	20	--	141	24	83
(0.5-0.0)	133	20	85	141	35	75
During and after spill						
0.0-0.5	1137	40	96	1552	24	98
0.5-1.0	1028	47	95	110	24	78
1.0-1.5	158	79	50	110	47	57
1.5-2.0	138	190	+38*	133	94	29
2.0-2.5	134	257	+92*	161	141	12
2.5-3.0	171	325	+90*	133	137	+3*
3.0-3.5	194	321	+65*	133	129	3
3.5-4.0	222	313	+41*	133	104	22
4.0-4.5	214	306	+43*	133	76	43
4.5-5.0	222	254	+14*	149	60	60
5.0-9.0	218	151	31	185	32	83
9.0-13.0	251	88	65	185	24	87
13.0-21.0	211	76	64	177	12	93
21.0-29.0	183	56	69	173	20	88
29.0-37.0	231	68	71	181	28	85
37.0-45.0	259	84	68	133	16	88
45.0-53.0	219	68	69	125	16	87

* Increase instead of reduction.

Two conditions likely to be experienced at wastewater treatment plants accepting industrial discharges or serving areas where large amounts of alkaline or acidic materials are transported are high and/or low influent wastewater pH. Two one-hour duration spills, one of sulfuric acid resulting in an influent pH of 2 and the other of sodium hydroxide resulting in an influent pH of 12 were generated. Results of these studies indicate that effluent pH returned to normal in approximately 15 hr (Figure 7); recovery from the acid spill was somewhat more rapid. The effect on COD removal efficiency is illustrated in Figure 8. The sodium hydroxide spill (influent pH 12) drastically affected efficiency for 20 hr after the spill while the sulfuric acid spill (pH 2) adversely affected COD removal efficiency for about five hours. The data for Figures 7 and 8 are presented in Tables 19 and 20. The system seemed more capable of rapid recovery from extreme acid conditions than alkaline conditions, possibly due to previously acquired acclimation to these conditions.

Two soluble organics, methanol and phenol, did not appear to affect the activated sludge process at slug doses of 1,000 mg/l for one hour and 500 mg/l for 30 min respectively. This conclusion is based on little, if any, change in effluent suspended solids or turbidity. However, the organics did adversely affect the effluent quality for a short period as indicated in Figure 9 and Table 21. The activated sludge could not degrade the large quantity of methanol and phenol spilled resulting in a sharp increase in effluent organics until the material was washed from the system. Even at these extreme methanol and phenol spills, COD removal efficiency returned to within one standard deviation of the baseline mean efficiency ten hours after the spill.

Although experimental design called for testing several spill concentrations of the same material, the small effect from what was felt to be the maximum probable spill obviated a need for subsequent runs. The pilot plant was not run at failure conditions each time because several weeks would be required for recovery until the next experiment could begin.

About 24 hours after the 1600 mg/l, one-hour-duration perchloroethylene spill, an unexplained, but significant decline in pilot plant performance was experienced; visual inspection indicated considerable solids being discharged over the clarifier weir. It is not known whether the perchloroethylene or changes in influent quality caused the effect on plant performance. Since the chemical is heavier than water it may have been retained in the system, thereby resulting in delayed effects.

An initial objective of the pilot plant studies was to develop slug dose treatment strategies. Materials studied did not pose a severe threat to the system but in many cases resulted in degradation of effluent quality; the 500 mg/l phenol spill was one of these. To minimize the effect on effluent quality, a countermeasure run involving a non-structural (no physical changes in the pilot plant) operational modification was conducted. Operational modifications in response to a soluble organic material are limited generally to improving the contact

of the contaminated influent wastewater with the activated sludge organisms either by increasing the aeration time or increasing the mixed liquor suspended solids (MLSS). Any response of this nature is predicated on receiving an early warning of the spill; increased aeration time or increased MLSS normally cannot be achieved instantaneously. At ALCOSAN both modifications can be made by routing the contaminated influent to tank 1 instead of tank 2. Tank 1 contains return activated sludge at a concentration of approximately 10,000 mg/l SS.

In the pilot plant the contaminated influent containing 600 mg/l phenol was routed to tank 1 for two hours prior to the spill and for 24 hours after the spill. Results indicate that the minimum COD removal efficiency was 19%. The immediate effect of the countermeasure was to reduce the effect of the phenol spill; however, routing of influent to tank 1 caused the washing of activated solids from the system. Following such a countermeasure, normal flow pattern should be re-established as soon as the slug dose peak has entered the activated sludge process. (See Appendix F for data on this countermeasure study).

CONCLUSION

Pilot plant studies showed the activated sludge process to be less sensitive to massive slug doses of numerous hazardous materials than was reported by others who had studied the effects of slug doses on the activated sludge process. Even an industrial waste, sulfuric acid pickle liquor, which combined the characteristics of low pH and high heavy metals concentration evaluated in separate studies, did not affect performance significantly. However, there was an indication of a negative effect of the treatment process from 5 to 20 hours after the spill.

Also, as shown in Tables 15, 16 and 17, there was effective removal of Cd and Cu while BOD removal efficiencies were reduced, up to 5 hours after spill.

SECTION VII

MONITORING AND SURVEILLANCE SYSTEM

Institution of countermeasures to mitigate the effects of a hazardous material spill relies on an early warning of conditions that can affect the treatment processes. During this period, sites for installation of an early warning system for monitoring and surveillance were investigated. The recommended sites consisting of five field stations and a station at the head-end of the treatment plant are indicated on Figure 10. However, sewerage basins outside Pittsburgh city limits and diversion structures (and sewerage basins) within Pittsburgh city limits are given in Figure I-1 and I-2, respectively. In Figure I-2, the clustering of diversion structures can be clearly seen, although the image area is reduced. A schematic of a typical remote monitoring station is presented in Figure 11. The objective of this system is to notify plant personnel of a spill event or of influent wastewaters with significantly atypical characteristics. The ability to collect discrete samples of the atypical wastewater, thus allowing sample characterization beyond that capable of remote sensors also is desirable.

LOCATION CONSTRAINTS

The interceptor sewer system at ALCOSAN, like many others, was designed to collect wastewaters that previously were discharged into the river without treatment. The system consists of 277 structures where municipal sewers are diverted to the ALCOSAN interceptor collection system. These are located generally along the Allegheny and Monongahela Rivers above the interceptors. Refer to Appendix I, Figures I-1 and I-2. To connect the existing trunk lines to the treatment facility and maintain gravity flow, design called for placement of the interceptors at depths exceeding 30m (100 ft.) and most connections to the interceptors require downshafts of considerable depth. It is not possible to monitor the wastewater in the interceptor at the diversion structures; in addition, because of the continuous flow down the downshafts, placement of equipment to pump sewage from the interceptor to the surface is not possible at the downshafts. The only access to the system is through ten access shafts and junction chambers built during construction of the interceptor sewers.

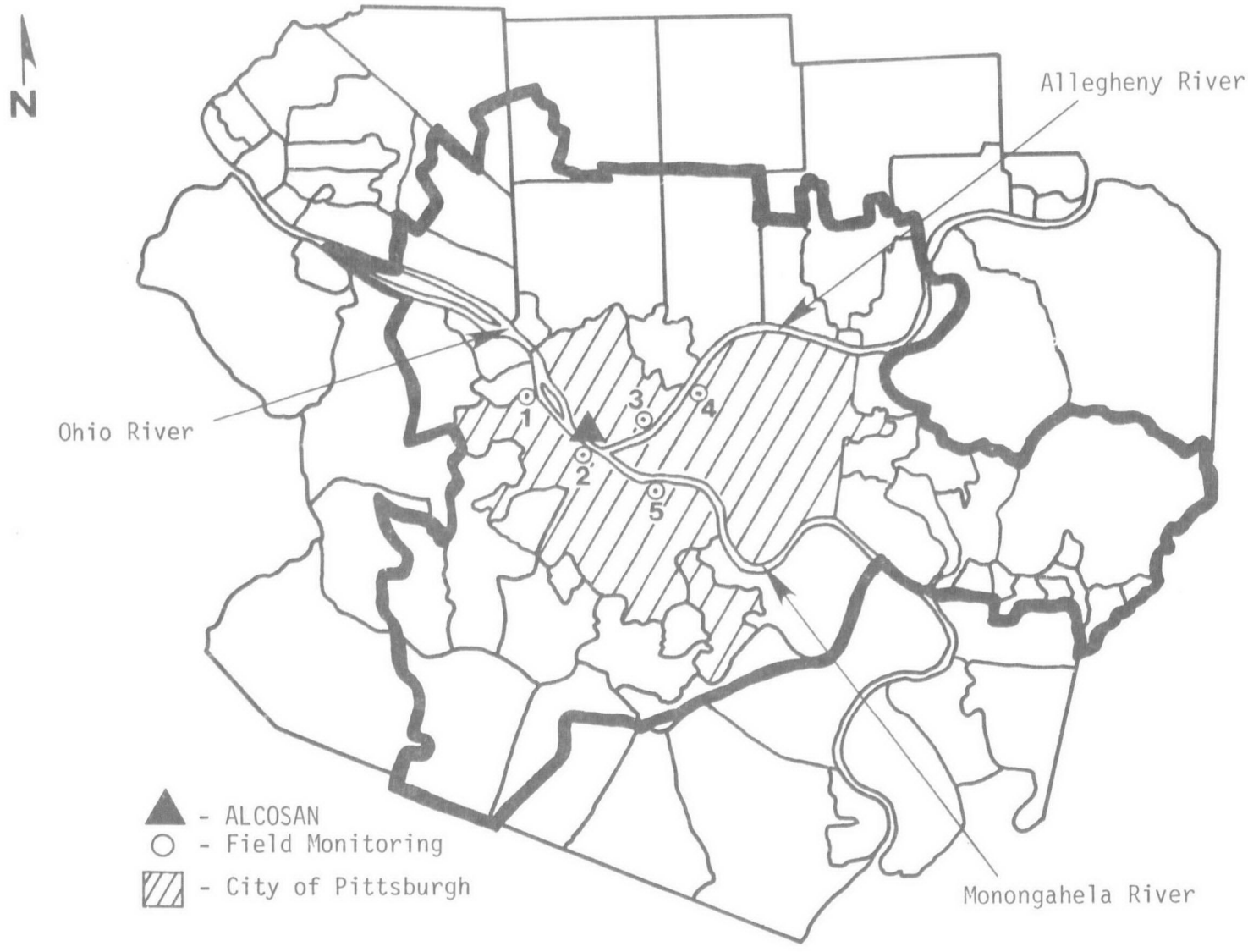

FIGURE 10. ALCOSAN SERVICE AREA MAP

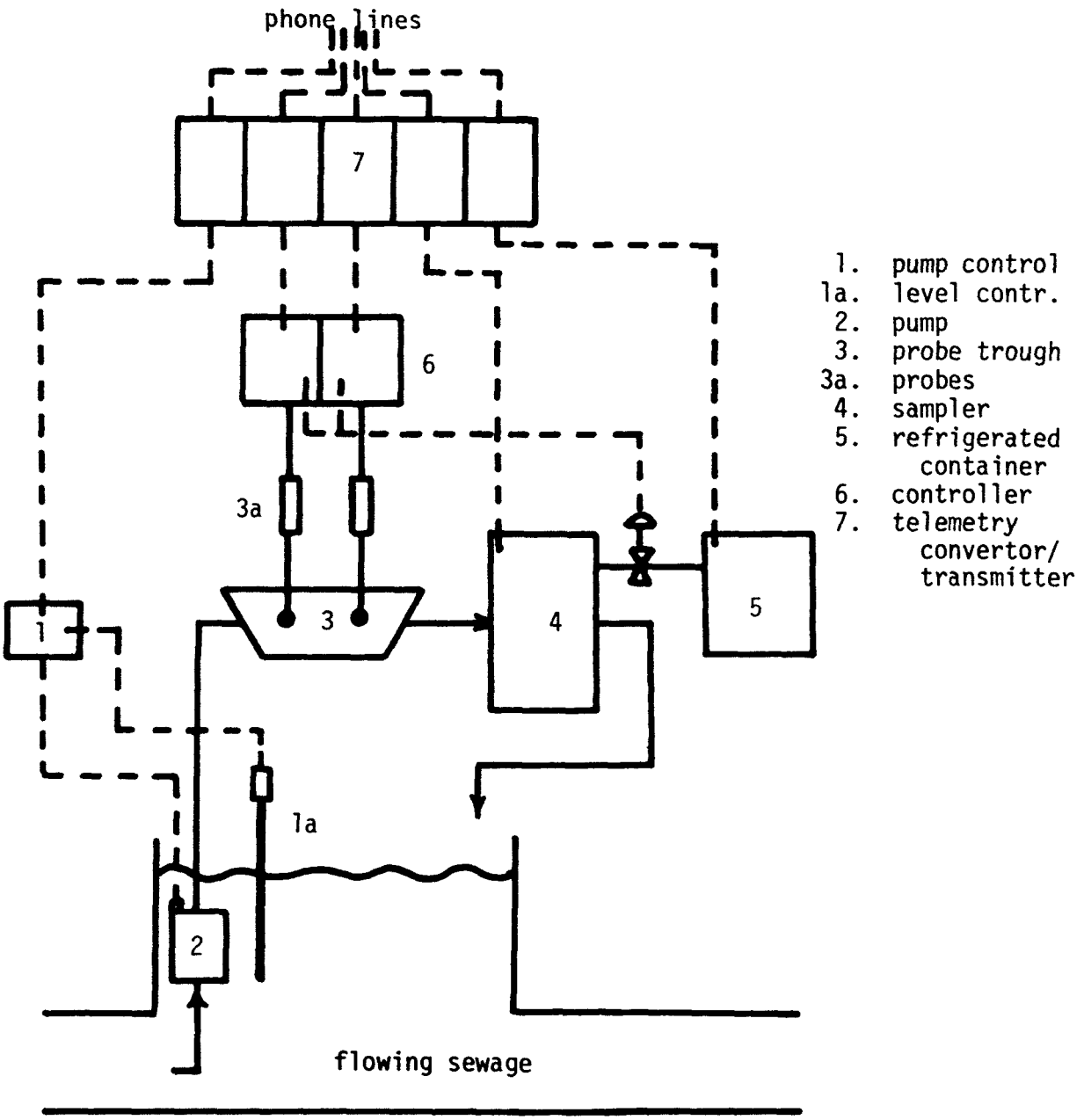

FIGURE 11. SCHEMATIC OF TYPICAL REMOTE MONITORING STATION

DATA COLLECTION AT THE DIVERSION STRUCTURES AND MONITORING STATIONS

Because of the complexity of the ALCOSAN interceptor system, great sewer depths, and inaccessibility of the diversion structures, flow data were not collected at these points and are not recommended for future collection in this system except for a few specific locations (see Table 22). In other municipal collection systems, if it is desired to calculate loadings as well as to obtain quality data, flow determinations may be made. A significant effort to collect quality data at the diversion structures and in other parts of the system was made during the course of the study, and continues to be made by the ALCOSAN staff. The collection of these data is for locating potential sources of contaminants (i.e., hazardous materials generated within the system) and neither to pinpoint nor make estimates of total quantities.

For example, high concentrations of acids or bases will be reflected by wide variations in pH at a diversion structure. This indicates that an event may be forthcoming at the ALCOSAN plant within the time interval between when the data are collected and the estimated time of arrival at the plant. This time interval is known at various locations in the system. Between the time of the material's entry through a diversion structure into the interceptor and the entry of the material into the plant, a considerable amount of dilution takes place. In the meantime, the plant can be forewarned of a potential incident by a full-operational monitoring and surveillance system. No adverse effects may be expected at the plant if the monitoring system at the plant influent registers no significant variation at the expected time. In the case of mineral acids or bases, the sewage alkalinity or acidity in combination with dilution effects could have counteracted the original observed condition.

If the monitoring system over a period of many months or several years demonstrates that events are likely to happen a significant number of times and NPDES regulations are also likely to be violated a significant number of times, then the plant may institute full-scale measures to counteract such incidents. With respect to the ALCOSAN system the work reported herein based on pilot plant results would seem to indicate that wide variations in pH are not likely to have a significant impact on plant operations. As pointed out earlier, however, this does not mean that wide variations in pH, even variations which are less significant than those imposed during the course of this study, may not have an adverse effect in the operation of the full scale plant. Variations in pH, together with other operating conditions may, in fact, cause significant plant upsets. The monitoring and surveillance system will provide a history of these occurrences.

During this course of the study, the ALCOSAN plant was significantly upset for several days. The cause for this upset was not determined. In the future, ALCOSAN and other plants and systems throughout the country which are equipped with monitoring and surveillance systems will gain information on plant upsets at the actual time they are occurring.

TABLE 22

FIELD MONITORING STATION DATA

Station	Kilometers (mi) Treatment Plant	Flow* m^3/day (MGD)	Approx. Time To Treatment Plant (Minutes)
1. Chartiers Junction Chamber	1.0 (0.6)	83,270 (22)	26
2. Saw Mill Run Downshaft	3.1 (1.9)	68,130 (18)	84
3. Mendota Street Access Shaft	5.2 (3.2)	79,500 (21)	141
4. 36th Street Access Shaft	6.9 (4.3)	257,400 (68)	189
5. South 8th Street Access Shaft	9.0 (5.6)	212,000 (56)	248

*Year 2000 estimate

This body of information, collected as time passes, will provide a basis for a consistently met high-level effluent quality. Plant upsets at ALCOSAN and at other plants throughout the country are likely to continue without a well-designed program of collection and analysis of data at key points in the collection system in the field and a set of operational plant countermeasures.

The monitoring and surveillance system was commencing operation at the time of preparation of this report. With this system, the development of upset history will continue.

Data collection at fixed points in the system with monitoring and surveillance apparatus is being supplemented by collection of data by field teams on a regular basis. Of course, field teams cannot be present whenever an accidental spill or unauthorized discharge of hazardous materials occurs somewhere within the system. The monitoring and surveillance system which has been designed for ALCOSAN and described herein, although not capable of measuring specific contaminants, will provide an indication of wide variation in easily measurable water quality parameters at points in the system before significant dilution takes place and the impact of these changes is obscured. Data collected by the field teams and the monitoring and surveillance network stations will be used to isolate continual violations of ALCOSAN regulations for disposal of materials into specific portions of its collection system, thereby narrowing ALCOSAN's search for violators. ALCOSAN expects to significantly reduce potential NPDES violations of its effluent discharges by using the monitoring and surveillance network. Increased understanding of the system components and users will develop as time passes, thus aiding to reduce potential NPDES violations.

The character of the ALCOSAN system can be determined by a study of the information presented in Appendix I. Appendix Table I-1 contains quality information for some selected parameters, the diversion structures, and the type of area being served by the given portion of the collection system. Besides the general character of the area, the location of major dischargers of specific contaminants is known by the ALCOSAN staff. The type of data and information presented in Appendix I may be collected for any system and used by operating personnel to redirect control efforts.

FIELD MONITORING STATIONS

Table 22 provides a brief description of the field stations. These stations located at pertinent points in the collection system are constructed such that representative samples can be taken from the interceptor sewer flow. The field stations are equipped with the following:

1. A high head capacity 1.5 hp. submersible grinder pump capable of lifting a continuous flow of at least 57 l/min. (15 gpm) from the interceptor 30m (100 ft.) to the surface; pump operation is dependent upon sewage level in the access shaft and is controlled by either a mercury float switch or electrodes.

2. A basin at the surface which the pumped wastewater flows through.

3. A refrigerated sampler capable of collecting 28 discrete samples at predetermined intervals; the sampler can be activated automatically from sensor signals or manually.

4. pH and possible oxidation-reduction potential (ORP) sensors mounted in the flow-through basin and corresponding data displays.

5. Telemetry equipment to transmit sensor signals and pump and sampler operating signals to a central panel at the treatment plant where they will be recorded continuously on strip recorders.

Except for one site, all equipment will be housed in existing, permanent structures built at the access shafts. At the Saw Mill Run structure a small weather-tight structure will be built.

Wastewater will be pumped from the interceptor to a flow-through basin at the surface and past the sensor probes before being discharged back to the interceptor sewer.

Data from the sensors will be telemetered to the treatment plant as will be pump operation signals. If values of the monitored characteristics are beyond predetermined ranges (for pH initially 6.5 to 7.5) alarm signals will be triggered; these alarm signals also are to be transmitted to the treatment plant and will activate the automatic sampler which remains in operation until the monitored parameter returns to normal, the sample capacity is exhausted, or it is manually deactivated. Several safety features have been designed into the pump operations, and alarm signals are activated and transmitted to the control panel when problems arise. Appropriate response actions to alarm signals telemetered to the treatment plant are delineated in the contingency plan (see Section VIII).

TREATMENT PLANT INFLUENT MONITORS

At the head-end of the treatment plant sensors monitoring raw influent prior to prechlorination will be placed in the present automatic influent sampler. Parameters intended to be monitored continuously include pH, oxidation-reduction potential, conductivity, dissolved oxygen, and temperature. The data will be recorded continuously at the central control panel located nearby thus eliminating

the necessity for telemetry equipment. Again, when a predetermined critical level is reached for a specific parameter an alarm will sound alerting the operator. The response has been delineated in the contingency plan (Section VIII). Initially, pH limits of 6.5 and 7.5 have been selected. These limits have been set until further documentation of the effects of wastewaters beyond this pH range have been determined. After activation of an alarm signal, time is available to initiate countermeasures before incoming wastewaters reach the biological segment of the treatment plant.

SELECTION OF SENSORS AND ALARM LIMITS

As discussed in Section IV, Literature Review, many sensors are available for continuous wastewater monitoring; however, the operating environment and costs, particularly maintenance costs, have significantly limited the number of parameters which could be monitored continuously. The selection of probes for the ALCOSAN field monitoring stations was based on the following:

1. The probes have been demonstrated to be reliable over extended periods at the necessary detection levels without requiring extensive time for maintenance and calibration.

2. Extremes in pH have been shown to affect pilot plant performance to a significant degree.

3. Full scale treatment plant operating records have shown that even in 24-hr composite influent samples significant fluctuations of pH do occur; on numerous occasions over recent years pH's of outside the range 6.0 to 8.0 were detected.

4. When extremes in pH occur, the concentrations of other sewage constituents are likely to be also atypical, i.e., wide pH fluctuations are not characteristic of domestic sewage and are likely to indicate the presence of industrial wastes or spilled chemicals that contain other substances in addition to acids or bases (e.g., heavy metals).

5. Many materials, especially heavy metals, not toxic at a neutral pH, are soluble and thus potentially inhibitory under acidic conditions.

SECTION VIII

CONTINGENCY PLANS

WASTEWATER TREATMENT PLANT CONTINGENCY PLAN

Figure 12 presents an outline of a contingency plan delineating response actions to hazardous material spills for wastewater treatment plants. Such plans should be prepared after the magnitude of the spill problem has been assessed and after contacting local, state, and federal emergency response and regulatory agencies. The contingency plan for ALCOSAN was constructed after contacting the Pittsburgh and Allegheny County police and fire agencies, state police, county and state health departments, the Three Rivers Improvement and Development Corporation (TRIAD), Pennsylvania Department of Environmental Resources (DER), The U.S. Department of Transportation (DOT), U.S. Coast Guard, and Environmental Protection Agency Region III office.

The warning of a spill and potential toxic influent wastewater conditions may come from three sources, the remote early warning system, notification by an individual or agency, or by visual or other observation of atypical influent wastewaters.

Several agencies may provide alerts in the event of a spill. The quickest would originate from the party responsible for the spill; however, it is unlikely that this party would alert the wastewater treatment plant. Regulatory agencies such as Environmental Protection Agency, Pennsylvania Department of Environmental Resources and the U.S. Coast Guard could possibly alert the treatment plant. However, their efforts may occur after some time and will be directed to the protection of property and control of the material to insure its safe handling and clean-up. The private clean-up contractor is often not notified in time to alert ALCOSAN personnel; furthermore, the clean-up contractor will be more concerned with mobilizing his own forces. The police or fire departments should be requested to alert the treatment plant. The police and fire personnel generally are the first on the scene of the spill. They are equipped with mobile radio and could call a central location quickly. Furthermore, these personnel may be readily informed of the procedure involved and criteria under which a call should be placed. The police and fire personnel are also experienced in being on the scene of a spill. Initially, police and fire agencies should be requested to alert the treatment plant in every case where a spilled material has entered or has the potential for entering the collection system. This criteria may be modified as documentation of effects versus quantity spilled increases.

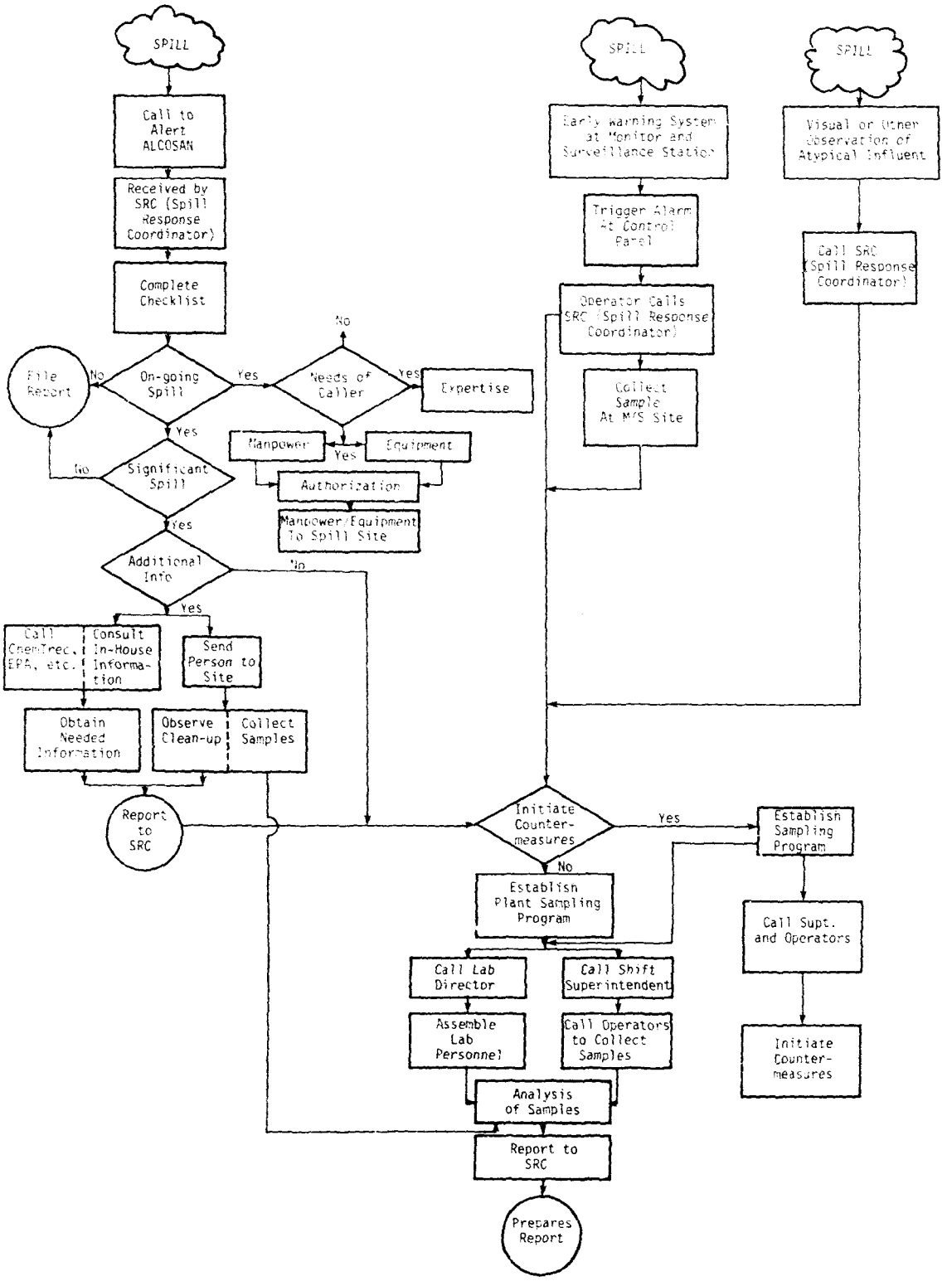

FIGURE 12. CONTINGENCY PLAN OUTLINE

The monitoring and surveillance system would be the secondary line in the warning system, since the ability to detect spills is limited.

Changes in the physical properties (visual changes, odors, etc.) that are detectable by the operating personnel at the head end of the plant have in the past been a means of detecting unusual conditions of the raw influent.

Once notification of the spill is received, the checklist shown in Table 23 should be completed and the information relayed to a predetermined Spill Response Coordinator (SRC). The SRC should consult available literature to determine the effects on human life, property, and the potential effect to the wastewater treatment plant. A representative of the treatment plant should be sent to the site, if necessary, to assist and advise the initial personnel at the spill scene to protect the sewage collection system. The sampling program at the plant should be initiated for documentation of the effects of the spilled material.

A list of potential countermeasures should be consulted and countermeasure operations initiated, if required. When the spill incident and any effects have passed, a final report of the incident, effects, and responses should be prepared. Such information serves to expand the data base for management of future incidents. It should be noted that participation in a contingency plan may require the treatment plant to provide information, expertise, manpower, and equipment to other agencies participating in the plan.

The ALCOSAN contingency plan is based on the following:

1. The extensive literature review on the effects of hazardous materials on biological treatment systems. As discussed previously, certain hazardous materials have a potential to affect the operation of the ALCOSAN treatment facility.

2. The comprehensive inventory indicates that significant quantities of hazardous materials that affect biological treatment are prevalent in the ALCOSAN service area and have a spill potential.

3. The Pilot Plant Hazardous Material studies indicate minimal long-term effects on the operation of the treatment process (see Section VI, Pilot Plant Evaluations). Slug dose spills such as heavy metals and organics affect the pilot plant only minimally but result in increased concentrations in the effluent.

4. The daily operating data of the ALCOSAN full scale facility indicates abrupt degradations in treatment efficiency and unexplained degradation in the quality of the effluent.

TABLE 23

HAZARDOUS MATERIAL SPILL REPORT CHECKLIST

1. Date:_____ Time:_____

2. Person Taking Call:_____

3. Person Who Contacted ALCOSAN:_____

   Agency:_____

4. Is this a current, on-going spill:_____

5. Spilled Material:_____ Quantity:_____

   Form (solid, liquid, gas):_____

6. Site of Spill:_____

7. Type of Accident:_____

8. Who was First on Scene:_____

9. Who Handled the Clean-up:_____

10. How Did the Material Enter a Sewer:_____

11. Does ALCOSAN Need to Send Man to Site:_____

12. Were Further Actions Taken by ALCOSAN (Explain):_____

_____

_____

_____

_____

_____

_____

These fluctuations are more drastic than the occasional variation due to diurnal and seasonal fluctuations in operating the plant.

5. A monitoring and surveillance system will provide the ALCOSAN personnel a means of documentation of hazardous material spills within the collection system and at the head-end of the treatment plant. The monitoring and surveillance system must be utilized in conjunction with a contingency plan of action to take proper advantage of its utility.

6. Operational modifications and countermeasures will be initiated in the event of a spill. A response and action network must be established outlining the action and the responsibilities necessary to initiate the action.

The major objective of the ALCOSAN contingency plan is to establish a plan of action in the event of hazardous material spills. Documentation of spills and their effects on the full scale plant is a major by-product of implementing the contingency plan. At present an adequate response mechanism does not exist if a spill is detected or reported within the system. Previously spills would pass through the plant and the results from the laboratory or operating problems would alert the personnel probably long after the spill had passed through the plant. Once the spill is detected in the collection system, its path may be followed into the wastewater treatment plant and evaluation of the effects, if any, may be carried out.

As previously discussed, prior to initiation of the ALCOSAN contingency plan, criteria must be developed to establish whether or not ALCOSAN should be alerted. That is, the hazardous material must be spilled within the boundaries of the service area and has entered or has the potential for entering the collection system. Once this has been determined, the effects of the quantity of material spilled must be considered. Quantities of some hazardous materials may not effect the treatment plant operation and effluent quality. Furthermore, dilution of the waste prior to entering the ALCOSAN plant may reduce the concentration below toxic levels of the waste to the plant wastewater. In the case of organics, certain materials may be toxic to the micro-organisms while others may serve as food source. Other materials may be dangerous to the collection system, gasoline and other explosive materials may be more harmful to life and property than to treatment processes.

In conjunction with the contingency plan, additional documents are necessary to maximize the plan's utility and effectiveness. Determination of the effects that a specific hazardous material has upon biological processes will have to be established prior to placing the plan into effect. The literature review that was compiled gives as comprehensive a breakdown of hazardous materials and their effects as was possible. Countermeasures that are recommended in Section IX,

Operational Modifications, should be consulted. The personnel should be aware of the options available to them for implementing a response to the hazardous material spill to minimize adverse effects on the plant. Records of clean-up contractors, spill control equipment avilable from TRIAD, and quipment specified in the Environmental Protection Agency Region III Contingency Plan should be available to the SRC.

LOCAL CONTINGENCY PLANS

Wastewater treatment plants should be active participants in local contingency plans. In Allegheny County, Pennsylvania public and private agencies and industry recently have initiated development of a county-wide plan for reacting to hazardous material spills. Included in the county-wide plan should be a communications network for receiving and disseminating information on spills, spilled materials and containment and clean-up techniques; provisions for on-site coordination; an alert system to warn the necessary agencies; containment and clean-up equipment and expertise; and legislation for enforcing the policies of the contingency plan.

Groups involved in the development of the local plan include:

1. Allegheny County and municipal fire departments
2. Allegheny County and municipal police departments
3. Allegheny County Department of Health
4. Local Industries
5. ALCOSAN
6. Local Universities and Colleges
7. Pittsburgh Poison Control Center
8. The Three Rivers Improvement and Development Corporation (TRIAD)
9. Pennsylvania Department of Environmental Resources (DER)
10. U.S. Environmental Protection Agency - Region III Office

It is worthwhile to note that only recently have local police and fire agencies become aware of the function of ALCOSAN and the possible effects that indiscriminate actions in controlling spills may have on the wastewater treatment facility. This awareness has resulted from concerned efforts by ALCOSAN representatives to contact the local response agencies. These efforts generally have been in the form of participation in local seminars on the management of hazardous material spills specifical oriented toward disseminating information to the local agencies.

SECTION IX

SPILL COUNTERMEASURES

The Allegheny County Sanitary Authority with a service area of 557 sq km (215 sq miles) provides wastewater collection and treatment for 76 municipalities and the City of Pittsburgh with a total population of 1.2 million. The wastewater is collected through 69 miles (111 km) of interceptor sewers, 30 miles (48 km) of which are in tunnels. The capacity of the collection system is 300 mgd. The treatment plant has a design flow of 757,002 cu.m./day (200 mgd). The ALCOSAN Service Area appears as Figure 10.

The treatment facilities include mechanically cleaned 1-inch bar screens to remove large objects from the wastewater and grit channels to remove readily settleable inorganic material. After 30 minutes pre-aeration, the settleable solids are removed in six primary gravity sedimentation tanks having a 2-hour detention time. The wastewater is prechlorinated prior to grit removal at 6000 lb. of chlorine per day for odor control.

The secondary step-aeration, activated sludge portion was placed on-line in September of 1973. The secondary system consists of six step-aeration activated sludge units--each consisting of four aeration tanks--and twelve final circular clarifiers. The aeration is by diffused air with fine air bubble diffusers. The influent is added to tank 2 of the four-tank unit. The return activated sludge is presently recycled to tank 1. From tank 1 return activated sludge is wasted or returned to the aeration system in tank 2. For disinfection, the final effluent is chlorinated prior to discharge to the Ohio River.

The sludge wasted from tank 1 is returned to the pre-aeration tanks at a rate of approximately 25% of the influent flow rate (45 mgd). The waste activated sludge and primary sludge settle together in the primary sedimentation tanks. The combined primary-activated sludge is blended to form a homogenous mixture and vacuum filtered. Polymer is added prior to filtration to improve the sludge dewaterability. The filtrate is returned to the head-end of the plant. The filter cake is incinerated and ash is flushed from the incinerators in slurry form to pits where the ash is settled. Water decanted from the ash pit is returned to the head-end of the plant; ash is disposed in approved landfills. Figure 13 is a schematic of the existing ALCOSAN plant.

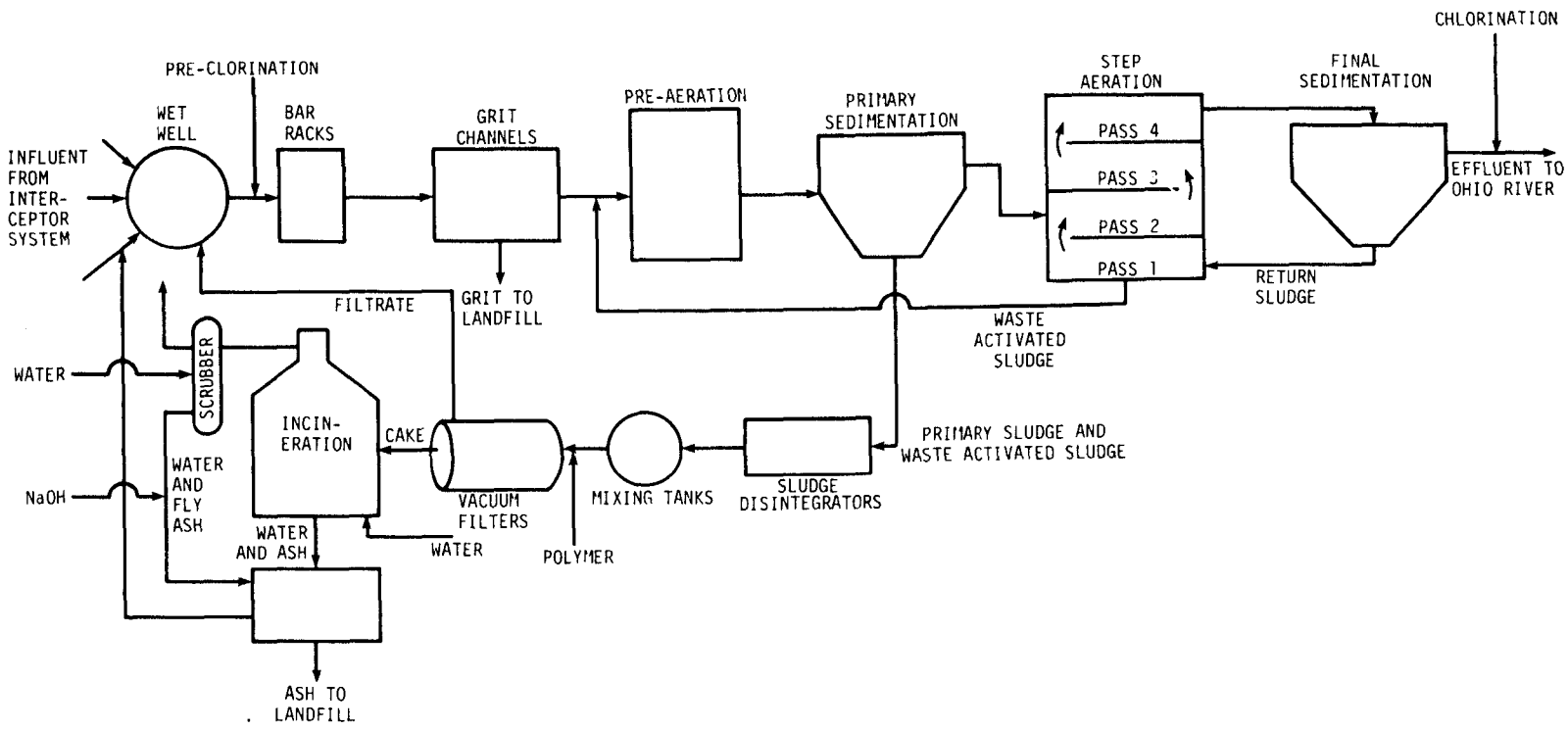

FIGURE 13. SCHEMATIC OF THE EXISTING ALCOSAN PLANT

Table 24 shows the operating data for the ALCOSAN plant for 1974. At present ALCOSAN is meeting the requirements for secondary treatment facilities. The average removal is 90% for BOD and Suspended Solids.

A mass balance was conducted over the primary treatment portion of the treatment plant (secondary treatment section was not completed at time of study). The study results indicated that:

1. Heavy metals exit the treatment plant by the following four pathways:

    a. effluent to the Ohio River
    b. grit removal for land disposal
    c. ash removed for land disposal
    d. incinerator stack discharges

    The proportion of the influent metals discharged in the secondary effluent (pilot plant) varied greatly for the different metals but except for greater than 60% removal of manganese, iron, and aluminum, more than 65% of all metals entering the primary treatment and the pilot plant secondary treatment facilities exited in the secondary effluent (35% removal). Heavy metals which were removed were found concentrated in the primary and activated sludges. Following incineration of the dewatered primary sludge, 60 to 86% of metals in the sluice ash were retained in the ash at the ash pits. Heavy metal concentrations in the incinerator stack gases were not determined. Due to the uncertainty in the determination of metal content in the ash, amounts of metals exiting through the stack gases cannot be calculated.

2. Metals concentrated in the primary sludge can re-enter the treatment process by: (1) solubilization while in the primary sedimentation tanks and (2) in the filtrate and decant liquid from the ash pits which are returned to the main pump station wet well. The fact that the metals were taken up by the sludge was demonstrated during the mass balance study (see Appendix H) and is shown on the following table:

TABLE 24

ALLEGHENY COUNTY SANITARY AUTHORITY
1974 OPERATING SUMMARY

Monthly Averages

Month	Average Raw Wastewater Flow MGD	pH	Biochemical Oxygen Demand Primary Influent mg/l	Primary Effluent mg/l	Final Effluent mg/l	% Removed Primary %	Secondary %	Total %	1000 lbs Removed/Day Primary	Secondary	Total
Jan.	168	7.1	137	81	16	41	80	88	78	91	169
Feb.	178	7.1	129	87	12	33	86	91	62	111	173
Mar.	198	7.1	121	90	11	26	88	91	51	130	181
Apr.	183	7.1	142	88	8	38	91	94	82	122	204
May	176	7.1	142	83	11	42	87	92	87	106	193
Jun.	175	7.0	145	99	15	32	85	90	67	123	190
Jul.	180	7.0	130	93	12	29	87	91	56	122	178
Aug.	161	7.0	150	112	18	25	84	88	51	126	177
Sep.	177	7.0	135	90	23	33	74	83	66	99	165
Oct.	146	7.0	189	123	15	35	88	92	80	132	212

TABLE 24. (continued)

Month	Suspended Solids								
				% Removed			1000 lbs Removed/Day		
	Primary Influent mg/l	Primary Effluent mg/l	Final Effluent mg/l	Pri-mary %	Secon-dary %	Total	Pri-mary	Secon-dary	Total
Jan.	170	66	25	61	62	85	146	57	203
Feb.	153	65	18	58	72	88	131	70	201
Mar.	153	60	13	61	78	92	154	78	232
Apr.	170	63	18	63	71	89	163	69	232
May	179	59	15	67	75	92	176	65	241
Jun.	177	74	16	58	78	91	150	85	235
Jul.	163	64	13	61	80	92	149	77	226
Aug.	171	61	14	64	77	92	148	63	211
Sep.	160	56	16	65	71	90	154	59	213
Oct.	247	73	18	70	75	93	212	67	279

TABLE 24. (continued)

Month	Dissolved Oxygen Final Effluent mg/l	Final Effluent pH	Final Effluent Temperature F°	Total BOD Discharged (in thousands)
Jan.	6.3	7.2	54	21
Feb.	6.0	7.3	53	18
Mar.	6.0	7.2	56	19
Apr.	4.7	7.2	60	13
May	5.1	7.3	64	16
Jun.	5.0	7.2	69	22
Jul.	5.3	7.3	72	18
Aug.	5.1	7.2	74	24
Sep.	4.8	7.2	70	34
Oct.	5.5	7.2	65	19
Avg.	5.4	7.23	64	20

TABLE 25

RATIO OF AVERAGE TOTAL METAL CONCENTRATIONS*

Metal	Ratio of Primary Sludge to: (Site 8) Primary Influent (Site 6)	Ratio of Pilot Plant Mixed Liquor (Site PP2) to: Pilot Plant Influent (Site PP1)	Ratio of Pilot Plant Return Activated Sludge (Site PP4) to: Pilot Plant Influent (Site PP1)
Pb	71.3	2.6	13.3
Mn	49.4	8.6	39.4
Cr	79.3	4.9	27.4
Fe	34.3	7.5	21.6
Ni	39.3	1.7	6.0
Cd	-	-	-
Zn	24.1	5.7	16.6
Cu	120.2	6.0	37.1
Al	137.3	8.3	45.0

Cadmium was found in the primary and activated sludges; however, the average primary influent and Pilot Plant influent concentrations were below detectable limits.

The metals concentration data indicates that:

a. In the primary influent, only Mn was present primarily in a dissolved form. Influent Pb, Ni, and Cd were completely insoluble; while Fe, Zn, Cu and Cr were primarily in an insoluble form.

b. The proportion of dissolved metals increased from primary influent to primary effluent for all except Ni and Cd. This would reflect removal of the insoluble metals probably by sedimentation.

c. Except for Mn, less than 50% of the metals in the vacuum filter filtrate are dissolved and considerably less in the ash pit decant liquid are dissolved. Improved settling in the ash pits would likely reduce the quantity of metals returned to the main pump station wet well. Dissolved metals now returned do not increase significantly the dissolved metal loading to the treatment plant.

d. Metals in the primary sludge are primarily insoluble.

e. In the Pilot Plant mixed liquor and return activated sludge, less than 10% of the metals are in a soluble form.

*Refer to Figure H-1 (Appendix H) for sampling sites.

f. Metals were present in the pilot plant effluent in primarily an insoluble form. Most noticeable was the transformation of Mn, which in the pilot plant influent was almost totally in a dissolved form, to primarily insoluble Mn in the pilot plant effluent.

Regarding solubilization, except for lead, nickel, and cadmium which were not removed in primary sedimentation and the substantial removal of dissolved chromate, the increase in the proportion of metals in a dissolved form during primary treatment probably resulted from the removal of insoluble metals, not the solubilization of metals. It was not possible to determine the retention time of the primary sludge in the sedimentation tanks for during this study, more sludge was withdrawn for filtration than was removed from the sewage by primary sedimentation. This was possible because of the quantity of sludge in the sedimentation tanks prior to initiation of the study.

Data indicated that the recirculation of filtrate and decant liquid from the ash pits was the source of only a small percentage of influent metals. Metals which were in the filtrate and decant liquid were primarily in an insoluble form.

Because secondary treatment was limited to a Pilot Plant scale operation, the effect on filtrate and filter cake composition of dewatering waste activated sludge could not be assessed. The new full-scale secondary plant was not on-line at the time of the experiments. However, because metals are concentrated in the activated sludge, the metal content of both filtrate and cake would likely increase.

3. All parameters measured fluctuated widely.

Sampling sites were selected to ensure that representative samples were obtained. However, because of the nature of the furnace sluicing operation, future sampling of the sluice ash should be at the influent to the ash decant pits.

Because the homogeneity of the wet well contents was questionable, samples at site 5, the grit channel influent were regarded to be more representative of treatment plant influent than samples at site 4, pump 4 at the Main Pump Station.

At sites where both grab and composite samples were collected, their daily averages were generally in agreement. However, for identifying loading fluctuations, grab samples at two-hour intervals and four-hour composites were more desirable than eight-hour composites.

The pilot plant results from the hazardous material studies indicate that ALCOSAN treatment system may have the ability to remove a certain portion of the heavy metals in the wastewaters. The pilot plant did exhibit the ability to operate satisfactorily even under spill conditions. BOD and SS removal efficiencies generally were not affected adversely for long periods of time by the hazardous materials tested. In some instances the plant had the ability to partially treat specific hazardous materials reducing the quantity discharged in the effluent (e.g., copper, chromium from pickle liquor, methanol, phenol). However, to maintain normal plant performance under the adverse conditions resulting from spills of hazardous materials may require modification of plant operation.

From the operating data for the ALCOSAN wastewater treatment plant, there appears to have been no long-term effects resulting from hazardous material spills. However, documentation of spills is quite difficult, if not impossible. No early warning system exists at present to notify ALCOSAN personnel of drastic changes in the raw influent quality. Because of time required for analytical testing, any deterioration in effluent quality generally is detected several days after the atypical influent entered the treatment facility. By this time the advantages of countermeasures to mitigate effects are lost. Countermeasures may be initiated to protect the biological system or to reduce the quantity of spilled material discharged from the facility.

The ability to respond to a spill with a countermeasure will require a warning system to alert personnel of the spill. The monitoring and surveillance system and the internal contingency plan are intended to provide the necessary warning.

Potential countermeasures that may be implemented at ALCOSAN are summarized in Table 25 for the various categories of hazardous materials as presented in the questionnaire. The types of responses are applicable to all treatment facilities and not just the ALCOSAN plant. The responses are general and may not be the most practicable alternatives for various plants under existing conditions of operation but are technically feasible responses for hazardous material spills.

Operational modifications may be considered for the treatment plant in the event that the character of the influent would be detrimental to the biological process.

Many of the following modifications involve the use of the primary effluent channel which may be used as a chemical feeding and mixing tank to complex the material to be removed. The retention time of the primary effluent channel when used as a mixing tank would be at least 4 minutes. Flocculation would take place in the aeration tanks with the chemical sludge and activated sludge settling in the final clarifiers. The modifications presented include physical, biological, and chemical alternatives; all may be simulated on a treatment plant model. A brief description of several alternatives follows:

TABLE 26

SPILL COUNTERMEASURES

	Add Acid	Add Caustic	Increase Aeration	Add Oxidant	Activate Skimmers	Add Carbon	Precipitate	Change Sludge Return Rate	Aerate Sludge Prior to Recycle	Divert and Store	Alter Sludge Waste Rate
01 Elements, (liquid, solid)										+		
02 Salts (non-heavy metal)										+		
03 Salts (heavy metal)							+					
04 Mineral salts		+										
05 Short Chain Organic Acids		+	+	+								
06 Long Chain Organic Acids					+	+		+	+			
07 Caustics, Alkalines & Hydroxides	+											
08 Oxides					+							
09 Insecticides, Herbicides, Fungicides & Rodenticides			+		+	+		+	+			
10 Phenols			+		+	+		+	+		+	
11 Poisons			+		+	+		+	+			
12 Radioactive Materials										+		
13 Heavy Metal Organics					+	+	+	+	+			
14 Flammable Hydrocarbons				+	+	+		+	+		+	
15 Non-Flammable Hydrocarbons				+	+	+		+	+			
16 Flammable Hydrocarbon Derivatives				+	+	+		+	+		+	
17 Non-Flammable Hydrocarbon Derivatives				+	+	+		+	+			
18 Compressed Gases			+			+						

A. When a hazardous material is chemically complexed, the contaminated sludge may be handled as shown in Figure 14 A. A small proportion of the sludge is returned to the aeration tanks and a large proportion is wasted. The return sludge capacity from the final clarifiers is 15 to 50% of the influent flow. The capacity of the 10 return sludge pumps is 0 to 8,700 gpm (0 to 12.528 mgd). These ranges will limit the proportions of sludge which may be returned and wasted. When the alternative to minimize the quantity of sludge returned to aeration is implemented it will be necessary to allow the MLSS concentration to build up in the aeration tanks.

B. When a slug load of potentially degradable organics occurs the alternative Figure 14-B exists. A large fraction of the sludge is returned to the aeration tanks and a smaller proportion wasted. Again pumping capacities will limit the proportions.

C. A possible controversial alternative is to complex, chemically, the detrimental material in the primary effluent channel and then by-pass the chemical treated sewage and chemical sludge. Pre-chlorination or mid-point chlorination could also be implemented in this case. The flow pattern is shown on Figure 14-C. Based on the results of this study, it is unlikely that such an alternative would ever be required at ALCOSAN to maintain the integrity of biological treatment.

D. An alternative requiring a minimum amount of construction is the addition of piping to permit the contaminated secondary sludge to be pumped directly to vacuum filtration from Pass #1. During this time no sludge would be recycled to the aeration tanks. The flow pattern is shown in Figure 14-D. The recycling of in-plant waste streams to the wet well results in the material passing through the head-end monitoring and surveillance station once again. The sludge will continue to be handled in this way until the monitor indicates satisfactory concentrations of the offending material.

E. A possible modification of alternative C incorporating alternative D would have a flow pattern as shown in Figure 14-E. Instead of by-passing the chemically treated sewage and chemical sludge to the river it would be pumped from the primary effluent channel to the final sedimentation process. It would then be taken with the secondary sludge to vacuum filtration. Pre- or mid-point chlorination may be practiced.

F. A minimum of modifications are required to provide chemical treatment between grit removal and pre-aeration. The chemical sludge could then be settled in the primary sedimentation tanks thus being removed and dewatered in the normal flow pattern. The short response time (probably less than 15 minutes) reduces the potential for corrective steps that can be taken after grit removal; however, with the monitoring alarm system linked to operating controls, pH neutralization for example could be readily accomplished. The flow pattern is shown in Figure 14-F.

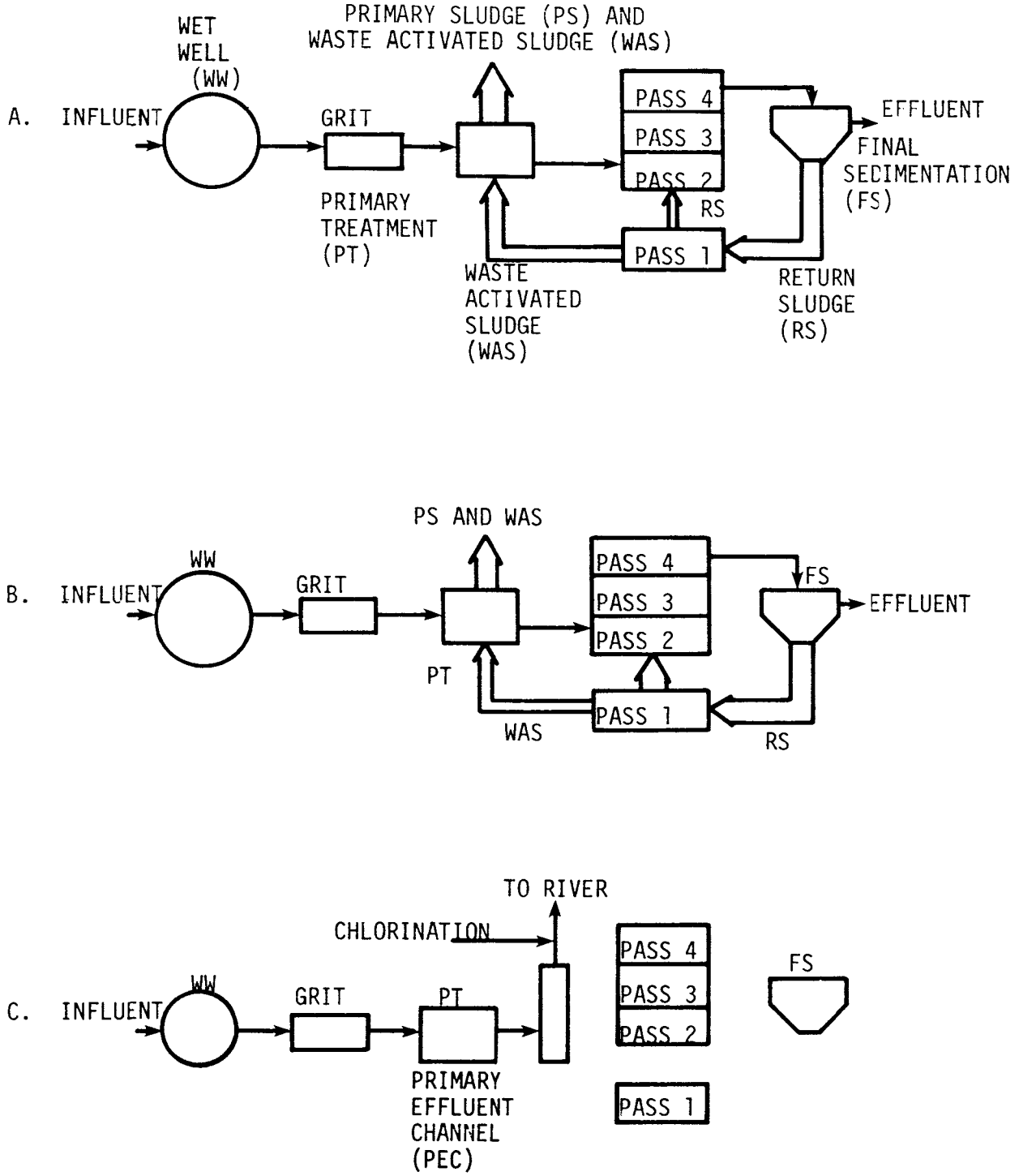

FIGURE 14 (A-C). COUNTERMEASURES FOR THE ALCOSAN TREATMENT PLANT

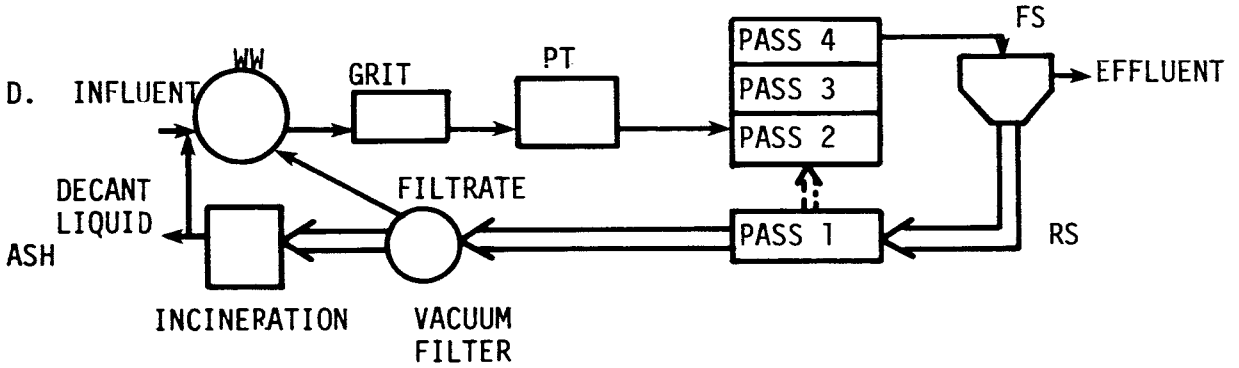

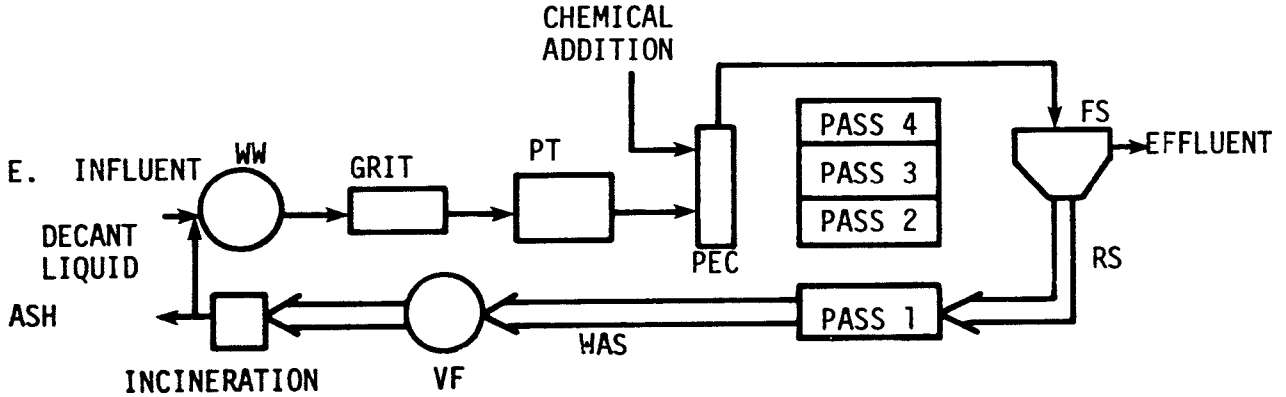

FIGURE 14 (D-E). COUNTERMEASURES FOR THE ALCOSAN TREATMENT PLANT

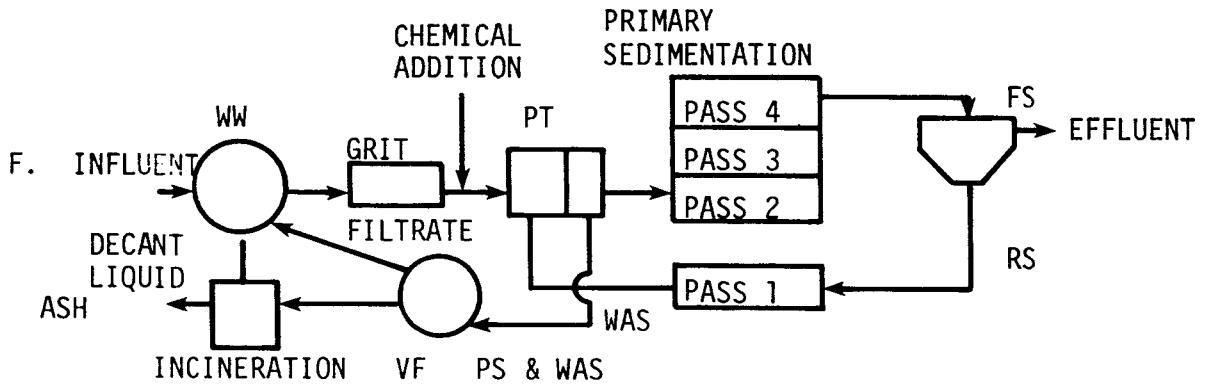

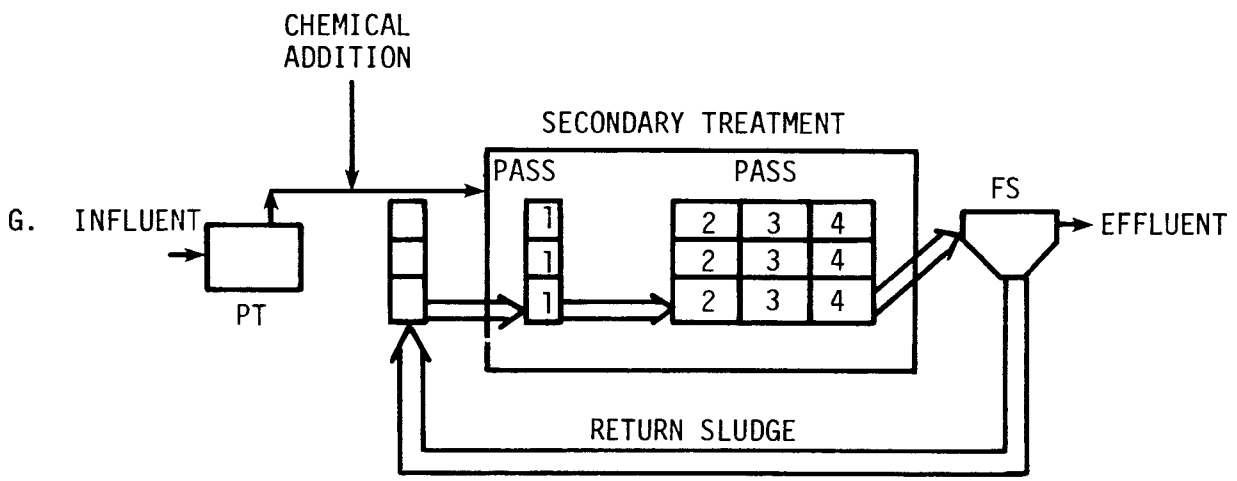

FIGURE 14 (F-G). COUNTERMEASURES FOR THE ALCOSAN TREATMENT PLANT

G. After chemical treatment in the primary effluent channel, flocculation in the aeration tanks, and sedimentation of the chemical sludge along with the activated sludge in the final clarifiers, all of the sludge can be segregated and returned to a particular set of aeration passes. The flow pattern would be as shown in Figure 14-G. Once the sludge is in a particular set of passes, numerous operational modifications such as increasing the aeration time, further chemical conditioning, increasing the air supply, etc. may be initiated. During this time the remaining aeration passes can be utilized as under normal operating conditions.

H. By installation of a dividing gate in the primary effluent channel both the primary and secondary phases of the ALCOSAN plant are divided in half. In the event of a slug load, one-half of the treatment plant can be operated for treatment of the toxic material while the remaining half provides normal sewage treatment but at a reduced retention time.

I. The contaminated sludge may be removed from the final clarifier and pumped to the head of the primary tank. The sludge is removed from the system without contacting it with Pass 1 aeration or the primary treatment facility. The sludge may be contaminated due to a spill of material that will be adsorbed onto the sludge, such as heavy metals and pesticides. Precipitation may also result in a contaminated sludge when the sludge settles in the secondary clarifiers.

Additional sludge return pumps, piping from splitter box to constant head box, and new splitter boxes are required. The possibility of the vacuum filters and incinerators not being able to handle the added volume of sludge may necessitate upgrading.

J. Powdered carbon may be added to the existing treatment scheme in the event of a hazardous material spill; it should be added where quantities can be controlled, such as to a portion of the primary settling system. A spill of soluble organics such as organic solvents or pesticides may be removed in this manner. The carbon may be added to the primary sedimentation tanks, the secondary clarifiers, or the chlorine contact tanks. Addition of carbon to the primary or secondary sedimentation facilities would not require sludge removal structural modifications. The present sludge removal operations would be adequate to remove the sludge. The efficiency of the mixing and flocculation capabilities of the clarifiers with regard to providing sufficient contact time may be examined. The dissolved organics in the primary sedimentation units may interfere with the efficiency of the carbon to remove toxic wastes. The chlorine contact tanks do not have sludge removal capabilities. The recovery of the carbon would be another limiting factor.

K. Another countermeasure that would be applicable to the ALCOSAN system would be neutralization prior to biological treatment. The dosages would depend upon the concentration and duration of the spill and the final pH that is desired. Further investigation is necessary in order to implement this countermeasure.

If countermeasures are needed at treatment facilities, additional local legislation and financing may be required. Mechanisms are discussed in Appendix J.

SECTION X

DISCUSSION AND SUMMARY

The purpose of this project was to determine the effects of short-term of slug-type spills of hazardous materials on biological waste treatment and to suggest approaches for mitigating adverse effects on treatment processes and effluent quality. The effects of spills of a series of organic and inorganic materials, heavy metals and some mixed wastes have been determined at the pilot-scale with results potentially applicable to full-scale treatment facility operation. Contrary to what was originally expected, pilot plant studies indicated that slug-type maximum probable hazardous material spills in fact had relatively minor and short term adverse impacts on the integrity of the pilot plant operation. It is known, however, that the ALCOSAN plant and every other biological treatment plant has, at one time or another, experienced significant plant upsets; it is likely that at least some of these upsets have been caused by hazardous materials spills. This study did not examine the effect of long term or chronic spills. Therefore, the study does not address itself to such factors as build-up of heavy metals in the sludge or synergistic effects. Synergistic effects would result from two or more operational variables affecting the process and its integrity at the same time (e.g., low dissolved oxygen in the mixed liquor of the activated sludge process in combination with a spill of a hazardous material).

An inventory of hazardous spills was carried out for two primary reasons: (a) to broaden the general understanding of the types and quantities of materials kept on hand and regularly used in various kinds of industrial and commercial operations and (b) to assess where spills were likely to occur in the system. This information improves the understanding of the potential for spills in not only the Pittsburgh area but also in other areas of the country where similar industrial and commercial operations exist. Additionally, assessment of the relative magnitudes of stored materials should be used to set priorities for further work. Many data were collected to find the character of the liquid wastes being discharged to the sewer system, within the collection system, and the plant. These data were gathered by questionnaires and field sampling. Besides being used to assess the character of Allegheny County areas' potential for hazardous material spills, these data can be applied to different situations.

The maximum possible NPDES violation at any treatment plant is the summation of all the dischargers to the system, assuming plant failure. The flow and quality information for the ALCOSAN system is complete at

the present time and is currently being used to assess various levels of permit violations under different sets of operating conditions.

The flows and quality information for the individual dischargers is used in conjunction with the quality data at the diversion structures presented in Appendix I. These data can be added to the local available data base for other areas of the country to construct NPDES background studies. The data can and have been used in the Section 208 (FWPCAA of 1972) areawide water quality management planning activities to project flows and loads, to estimate the quantity and quality of residues being produced at the central treatment facility, and/or to estimate residues at facilities which will require pretreatment. The loading estimates may also be used to determine what system-user cost recovery charges are appropriate under various operating conditions.

The continued use of the monitoring network stations within the ALCOSAN collection system and at the treatment plant, together with continued collection and assessment of data in the field, will provide an upset history as time passes. As this data continues to be collected, those portions of the system which are posing a problem by contributing to plant upsets by discharging hazardous materials will be better understood. The data also will be used by the plant staff to develop an NPDES compliance history, taking into account long- or short-term spills of hazardous materials which do not necessarily upset the operation of the treatment facility but contribute to objectionable quantities or concentrations of materials in the ALCOSAN effluent.

As the NPDES compliance history and the plant upset history are developed, decisions may be made to pursue some approaches presented herein to mitigate the adverse affects of these spills on the operation of the treatment facility.

This report presents a complete methodology and techniques for assessing the potential effects of hazardous material spills on biological treatment facilities around the country. The approach presented here should: (a) narrow the inventory requirements for other systems; (b) provide guidance for further assessment of specific hazardous materials or hazardous waste components in future studies; (c) provide an indication of what effects might be expected on biological treatment facilities for those individual chemicals studied; (d) improve the background data base for areawide wastewater management studies and particularly for NPDES background studies, and (e) provide the patterns for preparing contingency plans and countermeasure approaches which have general application.

Finding that the effects of certain hazardous materials studied in significant quantities are much less adversely significant on plant operations is important from the point of view of pretreatment requirements. Furthermore, it may be found that the biological treatment process is compatible with a wider range of waste components than was previously reported.

APPENDIX A

TABLE A-1. SUMMARY OF LITERATURE REVIEW ON EFFECT OF HAZARDOUS MATERIAL SPILLS ON BIOLOGICAL TREATMENT PROCESSES

Acetaldehyde --------	Chemical removal by biological treatment was 70 to 95%.
Acetone ----------	Chemical removal by aerated lagoon treatment was 10 to 30%.
Acetonitrile --------	O_2 consumption was inhibited by 490 mg/l of chemical; 143 to 165 mg/l reduced efficiency to the threshold of poor performance. Chemical removal was poor.
Acetylglycine -------	At 500 mg/l the chemical was readily and rapidly oxydized.
Acrylic Acid --------	Chemical removal in completely mixed activated sludge was 85 to 95%. Oxygen transfer rate coefficient was not affected.
Acrylonitrile -------	Chemical removal by biological treatment was 70 to 100%. Oxygen transfer rate coefficient was not affected by up to 50 mg/l of chemical.
Adipic Acid ---------	At 500 mg/l influent concentration, rapid oxidation occurred. 7.1% of TOD was exerted after 24 hours.
Alanine ----------	Stimulated O_2 consumption at 500 mg/l influent concentration with up to 39% of TOD exerted in 24 hours; alanine was oxidized readily.
Alcohols ----------	Removal of various alcohols generally was high ranging from 38 to 85%; 30% resulted from oxidation and the remainder by conversion to protoplasm.
Aldrin® ----------	Chemical was not significantly degraded.
Alkyl Benzene Sulfonates -------	At 100 ppm influent concentration, n-dodecyl ABS is not resistant to biodegradation; O_2 utilization was lower for keryl ABS and tetrapropene ABS.

APPENDIX A. (continued)

Amines ---------- Aliphatic amines inhibited O_2 uptake; sludges did not acclimate to rapid oxidation of amines.

Amino Acids -------- Influent concentration of 500 to 1000 mb/l resulted in 42% (mean) oxidation of amino acids.

Aminotriazole ------ There was no significant biodegradation of chemical.

Ammonia ---------- At 480 mg/l ammonia had deleterious effects on activated sludge process.

Ammonium Acetate --- At 1000 mg/l influent concentration, the O_2 consumption was greatly stimulated with 79% of TOD exerted in 24 hours; the chemical was readily degraded.

n-Amyl Alcohol ----- Toxic threshhold for aquatic organisms was approximately 350 mg/l.

sec-Amylbenzene ---- 500 mg/l concentration toxic during 24 hours of aeration.

tert-Amylbenzene --- 500 mg/l concentration toxic during 24 hours of aeration.

Aniline ---------- At concentrations of 10 and 20 mg/l, the increased chemical concentrations increased chlorine demand. At 500 mg/l, toxic and inhibiting effects were exhibited for up to 72 hours.

Anthracene --------- At 500 mg/l a lag period of up to 24 hours may occur before sludge acclimation and slow oxidation of the chemical.

Barium ---------- Greater than 100 mg/l inhibited O_2 consumption.

Benzaldehyde ------- At 500 mg/l chemical was oxidized slowly for 6 hours; oxidation increased between 24 and 72 hours with 61.3% of TOD exerted after 144 hours. A 4% solution was toxic.

Benzamide ---------- At 500 mg/l chemical undergoes slow oxidation for first 6 hours, then rapid oxidation from 24 to 72 hours with 63.3% TOD exerted after 144 hours.

1,2-Benzanthracene-- At 500 mg/l chemical was very slowly oxidized with 2.1% of TOD exerted in 144 hours.

Benzene ---------- Benzene concentrations of 50 to 500 mg/l had little affect on BOD removal efficiency. Completely mixed activated sludge achieved almost complete removal of up to 35 mg/l benzene.

Benzene Sulfonic Acid ---------- At 500 mg/l chemical was readily, but slowly, oxidized with 62% of TOD exerted after 144 hours.

Benzenethiol ------- At 500 mg/l the chemical inhibited O_2 uptake for up to 144 hours of oxidation.

Benzidene ---------- Chemical inhibited O_2 uptake for 144 hours of oxidation at 500 mg/l initial concentration.

Benzonitrile ------- Toxic or inhibitory effects exhibited for first 72 hours of oxidation with up to 43% TOD exerted after 144 hours; sludge acclimation was noted.

3,4-Benzpyrene ----- Chemical was readily, but slowly, oxidized at 500 mg/l influent concentration; up to 6.1% of TOD exerted after 144 hours of oxidation.

Benzylamine -------- Chemical inhibited O_2 uptake for up to 144 hours at 500 mg/l initial concentration.

4,4'-Bis (dimethylamino) benzophenone ------- At 500 mg/l lag periods of up to 72 hours were experienced before slow oxidation began.

Borates ---------- 10 mg/l caused significant inhibition of O_2 consumption.

Boron ---------- Boron concentrations of 0.05 to 10 mg/l produced inhibition of activated sludge process.

Butanamide --------- At 500 mg/l the chemical was readily, but slowly, oxidized for 24 hours.

Butanedinitirle ---- While 500 mg/l of the chemical was reported to be toxic for up to 72 hours of oxidation, a similar concentration was readily, but slowly, oxidized in 24 hours.

Butanenitrill ------ At 500 mg/l butanenitrile reportedly both inhibited O_2 consumption for 24 hours and was readily, but slowly, degraded with rapid oxidation in first 6 hours.

Butanol ---------- 80% BOD removal for complete mixed activated sludge with concomitant 98% removal of Butanol.

Butylbenzenes ------ Not susceptible to biodegradation at 100 mg/l initial concentration.

sec-Butylbenzene --- 500 mg/l was toxic during 24 hours aeration.

tert-Butylbenzene -- 500 mg/l was toxic during 24 hours of aeration.

n-Butyl ester of 2,4,5-T--------- Insecticide was degradable with 20% of measured COD exerted.

2,3-Butylene Oxide - Chemical was degraded very lsowly at 500 mg/l initial concentration.

Butyric Acid ------- At 500 mg/l the chemical was rapidly oxidized.

Cadmium ---------- Between 1 and 10 mg/l significantly inhibits O_2 consumption.

Cadmium-Manganese Mixture ---------- Mixture was more inhibitory than a similar concentration of the individual elements.

Cadmium-Zinc Mixture ---------- Mixture was more inhibitory than a similar concentration of the individual elements.

Calcium Gluconate -- At 250 mg/l chemical was susceptible to biodegradation but inhibited O_2 consumption.

Captan® ---------- Fungicide was not degradable.

Chlorates ---------- Greater than 10 mg/l chlorates significantly inhibited O_2 consumption.

Chloranil ---------- At 10 mg/l the chemical inhibited O_2 consumption.

Chlordane ---------- Insecticide was only slightly degraded.

APPENDIX A. (continued)

Chlorine ----------	At 175 and 525 mg/l chlorine detrimentally affected sludge filterability.
4-Chloro-3- methyl phenol ----------	At 10 mg/l the chemical was mildly inhibitory; 100 mg/l was toxic.
Chromium ----------	A 10 mg/l slug dose of chromium had little affect on activated sludge process, but nitrification was inhibited. Large amounts of chromium immobilized in sludge. A 500 mg/l slug dose of 4 hr. duration significantly affected system; recovery time was 4 days. Hexavalent chromium was more toxic than trivalent chromium.
Chromium-Copper Mixture ----------	Mixture was sligtly more toxic than was copper alone, but significantly more toxic than was chromate along.
Chromium-Iron Mixture ----------	Mixture was more toxic than either element individually.
Citric Acid --------	Chemical was biodegradable but depressed O_2 consumption.
Copper ----------	A 30 mg/l slug dose cuased a detrimental effect on activated sludge organic removal efficiency with recovery in 24 hr.; a 75 mg/l, 4 hr. duration slug caused a 24 hr. effect. Copper removal generally was good with large amounts found in the sludge. As organic loading increased copper removal decreased.
Copper-Chromate Mixture ----------	Mixture was slightly more toxic than was copper alone and significantly more toxic than was chromate alone.
Copper-Cyanide Mixture ----------	Mixture was more toxic than was copper alone, but less toxic than was cyanide alone.

APPENDIX A. (continued

Copper-Iron Mixture	Mixture was more toxic than was copper alone, but less toxic than was iron alone.
Copper-Nickel Mixture	Mixture was more toxic than was either metal individually.
m-Cresol	Chemical was biodegradable at 10 and 20 mg/l. Increased chemical concentrations (10 to 20 mg/l) resulted in decreased chlorine demand.
Crotonaldehyde	In excess of 90% chemical removal by biological systems.
Cyanide	Activated sludge recovered from 40 mg/l slug dose in 2 days.
Cystine	At 1000 mg/l concentration, O_2 consumption was completely inhibited and solids production stopped.
L-Cystine	At 500 mg/l chemical was readily, but slowly, oxidized.
DDT	Insecticide was not significantly degraded.
Diazinon®	Insecticide was not significantly degraded.
Dibenzacridine	chemical was slowly degraded at initial concentration of 500 mg/l; a lag period of 6 hr. was demonstrated.
1,2,5,6-Dibenzanthracene	Chemical was slightly inhibitory but slowly oxidized at 500 mg/l initial concentration; up to 7.9% TOD exerted after 144 hours.
2,4- and 2,6-Dichlorophenol	Chemical removals greater than 98% were achieved after five days of aeration. Initial chemical concentrations were 64 ppm.

2,4-Dichlorophenoxyacetic Acid (2,4-D)	Greater than 98% removal was achieved after five days aeration at 174 mg/l influent concentration.
2,6-Dichlorophenoxyacetic Acid (2,6-D)	At 178 mg/l influent concentration, 30% removal was measured during the fourth day of aeration, after a 3-day lag.
2,4-Dichlorophenoxypropionic Acid	No significant decrease of 186 mg/l initial concentration after seven days of aeration.
Dieldrin	Insecticide was not significantly degraded.
Di(2-ethylhexyl)-phthalate	Biological systems achieved greater than 50% removal of chemical; O_2 transfer rate coefficient was not significantly affected at 1 and 10 mg/l of chemical.
α,α'-Diethylstilbenediol	Chemical demonstrated inhibitory effects at 500 mg/l concentration.
Dimethylamine	Increased chemical concentration (20 to 100 mg/l) resulted in increased chlorine demand.
9,10-Dimethylanthracene	Chemical was not toxic but oxidation was slow at 500 mg/l initial concentration.
7,9-Dimethylbenz(c)-acridine	At 500 mg/l, two out of three sludges showed toxic effects; the other slowly oxidized the chemical; 4.1% TOD exerted after 144 hours.
7,10-Dimethylbenz(c)-acridine	At 500 mg/l the chemical was toxic.
9,10-Dimethyl-1,2-benzanthracene	At 500 mg/l chemical was readily, but slowly, oxidized with up to 12.7% TOD exerted after 144 hours.

2,4-Dinitrophenol -- Chemical concentrations of 1 and 5 mg/l reduced the O_2 uptake rate and solids production; greater than 15 hr. aeration required for 90% COD removal.

2,4-D, isooctyl ether ---------- Insecticide was materially degraded.

Dulcitol ---------- Chemical was slightly inhibitory in a 1.7% solution.

Endrin ---------- Insecticide was not significantly degraded.

Erucic Acid -------- At 500 mg/l the chemical was degraded with 11% TOD exerted after 24 hours of oxidation.

1,2-Ethanediol ----- At 484 mg/l a 1 to 3 hr. lag resulted before oxidation began. O_2 consumption was significantly depressed.

Ethanol ---------- Readily degradable at concentrations up to 1000 mg/l with up to 95% removal.

Ethyl Acetate ------ Greater than 90% removal was achieved by biological systems.

Ethyl Acrylate ----- Greater than 90% removal was achieved by biological systems.

Ethyl Benzene ------ Greater than 90% removal was achieved by biological systems.

Ethyl Butanol ------ Greater than 90% removal achieved by completely mixed activated sludge.

2-Ethylhexyl-acrylate --------- Greater than 90% removal by biological systems.

Ferbam® ---------- Fungicide was materially degraded.

2-Fluorenamine ----- At 500 mg/l chemical was slowly oxidized, but inhibitory.

N-2-Fluorenyl Acetamide -------- At 500 mg/l chemical was oxidized slowly with 12.3% TOD exerted after 144 hours.

APPENDIX A. (continued)

Fluoride ---------- At 33 mg/l there was no chemical removal by an aerated lagoon.

Formaldehyde ------- Chemical concentrations of from 45 to 720 mg/l demonstrated lag periods greater than 2 days before oxidation began. Following acclimation, 95% removal was achieved at 1750 mg/l initial formaldehyde concentration. By buffering with $NaHCO_3$ formaldehyde concentrations of up to 1500 mg/l were only slightly inhibitory.

Formamide ---------- At 500 mg/l the chemical was readily, but slowly, oxidized.

Formic Acid -------- At 720 mg/l chemical concentration O_2 consumption was slightly stimulated.

Fumaric Acid ------- A 1/120 N solution slightly stimulated O_2 consumption.

Glutamic Acid ------ At 500 mg/l chemical was readily oxidized.

Glycerine ---------- At 720 mg/l chemical stimulated O_2 consumption.

Glycine ---------- At 720 mg/l chemical stimulated O_2 consumption.

Grease ---------- 74% removal of grease in secondary treatment.

Heptachlor --------- Insecticide was slightly degraded.

m-Heptane ---------- Greater than 90% removal by biological systems.

1-Hexanol ---------- Greater than 70% removal by biological systems.

Hydracrylonitrile -- Less than 10% removal achieved in aerated lagoon.

Hydrogen Cyanide --- A 500 mg/l concentration was toxic for 72-hour oxidation period.

Hydrogen Ion ------- Best results were achieved in the neutral pH range.

Hydrogen Sulfide --- Chemical volatilizes and becomes corrosive.

4-Hydroxybenzene-carbonitrile ---- At 500 mg/l chemical was toxic for up to 72 hour.

Iodine ---------- Chemical was inhibitory at concentrations greater than 10 mg/l.

Iron, Ferrous ----- Inhibited O_2 uptake at concentrations greater than 100 mg/l.

Iron, Ferric ------ Inhibited O_2 uptake at concentrations greater than 100 mg/l.

Iron-Chromate Mixture --------- Mixture was more toxic than individual elements.

Iron-Copper Mixture --------- Mixture was more toxic than iron and less toxic than copper.

Isopropanol ------- Greater than 70% removal of chemical by biological systems.

Isopropyl Ether --- Greater than 70% removal of chemical by biological systems.

Lactic Acid ------- At 720 mg/l chemical greatly stimulated O_2 consumption.

Lactonitrile ------ System unable to handle concentrations greater than 139 mg/l without acclimation.

Lauric Acid ------- Surfactant forms were readily oxidized.

Lead ---------- Concentrations greater than 10 mg/l caused inhibitory effects.

Lindane ---------- Insecticide was not significantly degraded.

Malathion --------- Insecticide was not significantly degraded.

Malic Acid -------- A 1/120 N solution stimulated O_2 consumption.

L and DL Malic Acid ---------- At 500 mg/l the chemicals were oxidized but a lag period of greater than 8 hr. was indicated.

Malonic Acid ------ At 500 mg/l the chemical inhibited O_2 uptake. A 1/120 N solution stimulated O_2 uptake.

Maneb® ---------- Fungicide was materially degraded.

Manganese --------- Approximately 10 mg/l caused inhibition of O_2 uptake by activated sludge.

Manganese - Cadmium Mixture - Concentration of 100 mg/l manganese and 10 mg/l cadmium was more inhibitory than either element alone.

Manganese - Zinc Mixture ---- Mixture was more inhibitory than either element alone.

Mercuric Chloride - Chemical demonstrated inhibition at 1 mg/l and toxicity at 200 mg/l.

Mercury ---------- Toxic or inhibitory at concentrations greater than 5 mg/l. Mercury was removed by immobilization in sludge.

Methanol ---------- Chemical could be removed by biological systems, but at 500 mg/l a 3 to 5 hr. lag period was indicated before oxidation commenced. At 1000 mg/l O_2 uptake was severely depressed.

7-Methyl-1,2-benzanthracene -- At 500 mg/l chemical inhibited O_2 uptake for at least 24 hours.

Methyl Benzene Carbonitrile ---- At 500 mg/l the chemical was toxic for up to 72 hours.

20-Methyl-cholanthrene ---- At 500 mg/l the chemical showed inhibitory effect but could be slowly oxidized.

Methylethyl-pyridine -------- Less than 30% removal achieved by aerated lagoon treatment.

Methyl Parathion -- Insecticide was not significantly degraded.

2-Napthalamine ---- A 500 mg/l concentration was toxic.

Naphthalene ------- Greater than 70% removal achieved by biological systems. However, at 500 mg/l a lag period of up to 24 hr. was indicated.

Nickel ---------- Greater than 5 mg/l continuous dose significantly

reduces efficiency of biological systems. A 200 mg/l, 4 hr. slug dose produced a 24 hr. effect with 40 hr. necessary for recovery. Activated sludge removal of nickel was poor but was improved by lime addition.

Nickel-Copper Mixture --------- Mixture was more toxic than either element individually.

Nickel-Cyanide Mixture --------- Mixture was more toxic than was nickel alone but less toxic than was cyanide alone.

Nitrilotriacetate (NTA) ---------- No effect up to 200 mg/l slug dose, but acclimation required for removal.

Nitrite ---------- Concentrations greater than 10 mg/l inhibited O_2 uptake.

Nitrobenzene ------ At 500 mg/l chemical was toxic, inhibiting O_2 uptake for 144 hours.

2-Nitrofluorene --- At 500 mg/l chemical was slowly oxidizable.

Octyl Alcohol ----- 75 to 85% removal achieved by completely mixed activated sludge with little effect on O_2 transfer.

p,t-Octyl-phenoxy-nonaethoxy-ethanol --------- At 5 and 10 mg/l extended aeration achieved greater than 90% removal with no significant problems except that sludge production increased.

Oil, crankcase----- At 226 mg/l crankcase oil exhibited an O_2 uptake slightly less than that of the control with BOD removal efficiency of about 93%.

Oil, crude -------- At 82 mg/l crude oil exhibited O_2 uptake equivalent to control.

Oil, mineral ------ At 1000 mg/l mineral oil greatly inhibited O_2 consumption after 24 hours.

Oil, olive -------- At 916 mg/l olive oil inhibited O_2 uptake by one-third to one-half that of the control.

Oil, refinery ----- At 88 mg/l refinery oil exhibited a 44% greater O_2 uptake rate than the control with 94% BOD removal.

Oil, vegetable ---- At 148 mg/l vegetable oil exhibited a 30% greater O_2 uptake than the control with BOD removal of about 94%.

Oleic Acid -------- A 1/120 N solution inhibited O_2 uptake.

Organic Acids ----- At 250 to 720 mg/l organic acids were removed primarily by oxidation.

Oxalic Acid ------- At 250 to 720 mg/l O_2 consumption was significantly inhibited.

Oxydiproprionitrile- 170 mg/l did not affect biological system performance but acclimation was necessary.

Paraldehyde ------- 30% removal of chemical by aerated lagoon treatment.

Parathion --------- Insecticide was not significantly degraded.

Pentachlorophenol - At 150 mg/l chemical inhibited O_2 uptake and was not significantly degraded.

Pentaerythritol --- No toxic effect up to 1000 mg/l concentration at pH 7.0.

Pentamethyl-
benzene --------- At 500 mg/l chemical was toxic or inhibitory during initial 24 hours of aeration.

Pentanamide ------- At 500 mg/l chemical was readily but slowly oxidized with 13.6% TOD exerted after 24 hours.

Pentane ---------- At 500 mg/l pentane was resistant or very slowly oxidized.

Pentanedinitrile -- At 500 mg/l chemical was toxic or very slowly oxidized.

Pentanenitrile ---- At 500 mg/l chemical could be slowly oxidized.

Peptone ---------- At 720 mg/l of peptone O_2 uptake was stimulated and greater than 90% BOD removal was achieved.

Phenantrene ------- At 500 mg/l the chemical was slowly oxidized with 45.7% of TOD exerted after 144 hours.

Phenol ---------- Although phenol was inhibitory without acclimation; acclimated biological systems could achieve almost complete phenol removal.

p-Phenylazoaniline - Chemical was inhibitory at 500 mg/l.

p-Phenylazophenol - Chemical was inhibitory at 500 mg/l; small degree of biological oxidation after a lag period.

(m-, p-, and o-) Phenylenediamine- At 500 mg/l chemicals were toxic during 24 hours aeration.

Phenyl Methyl Carbinol -------- Greater than 85% removal was achieved by completely mixed activated sludge.

Polyethoxyethanol - At 100 mg/l the synthetic detergent was readily biodegradable.

Polyethoxy Fatty Ester ---------- At 100 mg/l the synthetic detergent resisted biodegradation.

Potassium Cyanide - At 480 mg/l chemical completely inhibited O_2 consumption.

Propanedinitrile -- At 500 mg/l chemical was toxic for up to 72 hours of oxidation.

Propanenitrile ---- At 500 mg/l the chemical was toxic for at least 72 hr.

β-Propiol-actone--- At 500 mg/l chemical resisted biological oxidation for up to 144 hour.

n-Propylbenzene --- At 37.5 mg/l chemical could be oxidized biologically but depressed O_2 uptake. One of the more toxic benzene derivatives.

Sodium Alkylbenzene Sulfonate ------- Surfactant was susceptible to bio-oxidation after extended periods.

Sodium Alkyl Sulfonate ------- Surfactant was susceptible to bio-oxidation after extended periods.

Sodium Aluminate -- Produced a more readily dewatered sludge.

Sodium Lauryl Sulfate --------- Surfactant was readily degraded after extended periods.

Sodium N- Oleyl-N-Methyl Taurate -- Surfactant was readily degraded after extended periods.

Sodium Pentachlorophenol-Slug doses greater than 20 mg/l drastically affected performance of biological systems; chemical was not removed and sludge would not settle. Systems could be acclimated to chemical.

Sodium α-Sulfo Methyl Myrislate- Surfactant was readily degraded after extended periods.

Styrene ---------- Greater than 95% removal by completely mixed activated sludge.

Sulfate ---------- Greater than 300 mg/l of sulfates corroded concrete even at neutral pH.

Sulfide ---------- Chemical was slightly inhibitory at 25 mg/l.

Sulfite ---------- Up to 500 mg/l can be oxidized if system is acclimated, but increased oxygen required.

Surfactant, Nonionic -------- Greater biodegradation of nonionic surfactants than anionic surfactants.

Tannic Acid ------- A 1/120 N solution inhibited O_2 consumption.

Tetraethyl Pyrophosphate --- Insecticides not significantly degraded.

1,2,4,5-Tetramenthyl-benzene --------- After a 3 hr. lag period the chemical was degraded slightly at 500 mg/l.

Thanite® ---------- Insecticide was materially degraded.

Thioacetamide ----- O_2 uptake was completely inhibited at 1000 mg/l concentration.

Thiocyanate ------- 1000 mg/l concentration significantly inhibited O_2 consumption.

Thioglycolic Acid - At 662 mg/l chemical was toxic or resistant to biodegradation.

2-Thiouracil	At 500 mg/l chemical was slowly but readily oxidized.
Thiourea	At 500 mg/l thiourea inhibited O_2 uptake for up to 144 hours.
Toluene	Greater than 90% removal was achieved by activated sludge; but at 500 mg/l toluene oxidation periods longer than 24 hr. were required.
Toluidine Compounds	At 500 mg/l m- and p- Toluidine were slightly oxidized while σ-Toluidine was toxic.
2,4,6- Trichloroaniline	Up to 10 mg/l of chemical was not inhibitory.
2,4,5-Trichlorophenol	Pesticide was slightly degraded.
2,4,6-Trichlorophenol	Significant inhibition occurred between 10 and 50 mg/l of chemical.
2,4,5-Trichlorophenoxy acetic Acid (2,4,5-T)	At up to 75 mg/l chemical was materially degraded; at 150 mg/l chemical was slightly degraded.
2,4,6-Trichlorophenoxy acetic Acid (2,4,6-T)	At 53 mg/l greater than 50% chemical removal was achieved during 14 days of aeration.
2,4,5-Trichlorophenoxy-proprionic Acid	At 107.5 mg/l after a 2 day lag greater than 95% chemical removal was achieved in 17 days.
1,2,4-Trimethylbenzene	Toxic at 500 mg/l for at least 18 hours of aeration, after which the material was slightly oxidized.
2,4,6-Trinitrotoluene (TNT)	Greater than 50% removal for concentration of 5 to 25 mg/l and retention times of 3 to 14 hr.
Trisodium Nitrilotriacetate (NTA)	At up to 200 mg/l the chemical did not upset the activated sludge process; in 3 to 6 hr. degradation

by acclimated sludge of up 500 mg/l was complete.

Tyrosine ---------- At 500 mg/l chemical stimulated O_2 uptake after a 3 to 5 hr. lag.

Urea ---------- O_2 consumption inhibited by urea concentrations up to 720 mg/l.

Urethane ---------- Chemical completely inhibited O_2 consumption.

Xylene ---------- A 500 mg/l concentration was toxic for the first 24 hour aeration.

Zinc ---------- The lowest continuous dose which caused an effect was 10 mg/l. At this concentration 89% Zinc removal was achieved, primarily by adsorption of Zinc to activated sludge. The lowest 4 hr. slug dose to cause a 24 hr. effect was 160 mg/l.

Zinc-Cadmium Mixture --------- Mixture was more toxic than either element alone.

Zinc-Manganese Mixture --------- Mixture was more toxic than either element alone.

Zineb® ---------- Insecticide was slowly degraded with 5 to 20% of COD exerted.

Ziram® ---------- Insecticide was slowly degraded with 5 to 20% of COD exerted.

APPENDIX B

TABLE B-1

CHECKLIST FOR ALCOSAN PERSONAL INTERVIEWS

1. Date_____ 2. Time In_____ 3. Time Out_____

4. Survey Team (1)_____ (2)_____

5. Name & Address of Industry_____ Telephone_____

_____

6. Employee(s) contacted within the industry 7. Employee(s) Title _____

(1) _____
(2) _____
(3) _____

8. Brief Description of Industrial Operation

9. Is a sewer plan available:_____ 10. Was it obtained?_____

11. Industries water source_____

12. Any methods of waste treatment_____ 13. What kind?_____

14. Any waste storage facilities_____ 15. What kind?_____

16. Any storage of toxic & Hm_____ 17. What kind?_____

18. How much_____ _____ _____

19. Any history of spills_____

20. If yes, How were they handled:_____

21. Any data on wastewater:_____ 22. Can it be obtained_____

23. Can Flow be sampled directly_____ 24. Location of manholes_____

25. Any discharge in river-creek_____ 26. Explain_____

_____

_____

27. Other Plants in Allegheny County_____

28. SIC No._____ 29. No. of Employees_____

30. Water Consumption_____

TABLE C-1

MANUFACTURING INDUSTRIES WITH GREATER THAN 50 EMPLOYEES IN THE ALCOSAN SERVICE AREA

SIC Number			Questionnaire Response			Survey and Sampling Programs	
	No. of Industries in SIC[a]	No. of Employees in SIC[a]	No. of Industries	Responses with Sewer Discharge Quality Data	Responses with Hazardous Material Inventory Data	No. of Industries Surveyed	No. of Industries Sampled
2011 Meat Packing Plants	7	780	3	--	1	10	5
2013 Sausages and other prepared meats	9	232	5	1	3	9	2
2024 Ice cream and frozen desserts	6	506	3	3	3	3	3
2026 Fluid milk	13	1809	1	1	1	4	5
2032 Canned Specialties	1	2457	1	1	--	1	1
2051 Bread, cake, and related products	70	2723	4	1	1	13	6
2052 Cookies and crackers	2	821	2	1	1	2	1
2065 Confectionery products	17	634	--	--	--	--	--
2082 Malt Beverages	2	1198	1	--	1	1	1

-- Means no data

[a] From: 1972 Pennsylvania County Industrial Report, Allegheny County. Bureau of Statistics. Release M-5-71, County Report Series 73212. 1971. P.33-43.

TABLE C-1 (continued)

SIC Number			Questionnaire Response			Survey and Sampling Programs	
	No. of Industries in SIC[a]	No. of Employees in SIC[a]	No. of Industries	Responses with Sewer Discharge Quality Data	Responses with Hazardous Material Inventory Data	No. of Industries Surveyed	No. of Industries Sampled
2086 Bottled and canned soft drinks	13	959	5	2	5	9	4
2077 Animal and marine fats and oils	3	94	1	1	--	--	--
2097 Manufactured ice	1	52	1	1	--	2	1
2099 Food preparations, nec*	4	18	1	1	1	4	--
2391 Curtains and draperies	10	326	--	--	--	1	--
2392 House furnishing, nec*	3	260	--	--	--	1	--
2393 Textile bags	5	152	1	--	--	2	--
2394 Canvas and related products	13	105	--	--	--	2	--
2515 Mattresses and bedsprings	5	231	1	--	--	4	4

-- Means no data
[a] From: 1972 Pennsylvania County Industrial Report, Allegheny County. Bureau of Statistics. Release M-5-71, County Report Series 73212. 1971. P.33-43.
* Not Elsewhere Classified

TABLE C-1 (continued)

SIC Number			Questionnaire Response			Survey and Sampling Programs	
	No. of Industries in SIC[a]	No. of Employees in SIC[a]	No. of Industries	Responses with Sewer Discharge Quality Data	Responses with Hazardous Material Inventory Data	No. of Industries Surveyed	No. of Industries Sampled
2641 Paper coating and glazing	1	824	--	--	--	1	--
2642 Envelopes	1	164	1	--	1	1	1
2645 Die-cut paper and board	1	107	--	--	--	1	--
2651 Folding paperboard boxes	2	82	--	--	--	1	--
2653 Corrugated and solid fiber boxes	4	775	4	2	2	2	3
2711 Newspapers	29	2467	--	--	--	8	1
2721 Periodicals	7	4	--	--	--	--	--
2751 Commercial printing, letterpress	83	361	1	--	--	12	--
2752 Commercial printing, lithographic	70	592	3	1	1	20	8

-- Means no data

[a] From: 1972 Pennsylvania County Industrial Report, Allegheny County. Bureau of Statistics. Release M-5-71, County Report Series 73212. 1971. P.33-43.

TABLE C-1 (continued)

SIC Number			Questionnaire Response			Survey and Sampling Programs	
	No. of Industries in SIC[a]	No. of Employees in SIC[a]	No. of Industries	Responses with Sewer Discharge Quality Data	Responses with Hazardous Material Inventory Data	No. of Industries Surveyed	No. of Industries Sampled
2761 Manifold business forms	3	91	--	--	--	1	1
2789 Bookbinding and related work	8	191	--	--	--	3	--
2791 Typesetting	10	176	--	--	--	3	1
2793 Photoengraving	6	102	--	--	--	3	1
2813 Industrial gases	3	32	1	1	1	5	2
2865 Cyclic crudes and intermediates	2	75	1	--	1	1	1
2816 Inorganic pigments	1	52	1	1	1	2	2
2819 Industrial inorganic chemicals, nec*	4	78	4	4	4	4	--
2821 Plastics materials and resins	2	239	3	2	3	1	--

-- Means no data
[a] From: 1972 Pennsylvania County Industrial Report, Allegheny County. Bureau of Statistics. Release M-5-71, County Report Series 73212. 1971. P.33-43.
* Not Elsewhere Classified

TABLE C-1 (continued)

SIC Number			Questionnaire Response			Survey and Sampling Programs	
	No. of Industries in SIC[a]	No. of Employees in SIC[a]	No. of Industries	Responses with Sewer Discharge Quality Data	Responses with Hazardous Material Inventory Data	No. of Industries Surveyed	No. of Industries Sampled
2851 Paints and allied products	12	369	6	2	5	12	4
2869 Industrial organic chemicals, nec*	--	--	--	--	--	--	--
2893 Printing ink	3	75	--	--	--	4	3
2899 Chemical preparations, nec*	9	444	1	1	1	11	2
2992 Lubricating oils and greases	6	161	--	--	--	6	1
3079 Miscellaneous plastic products	23	1308	1	--	1	7	3
3221 Glass containers	1	652	--	--	--	--	--
3229 Pressed and blown glass, nec*	3	174	2	2	2	1	2

-- Means no data
[a] From: 1972 Pennsylvania County Industrial Report, Allegheny County, Bureau of Statistics. Release M-5-71, County Report Series 73212. 1971. P.33-43.
* Not Elsewhere Classified

TABLE C-1 (continued)

SIC Number	No. of Industries in SIC[a]	No. of Employees in SIC[a]	Questionnaire Response: No. of Industries	Questionnaire Response: Responses with Sewer Discharge Quality Data	Questionnaire Response: Responses with Hazardous Material Inventory Data	Survey and Sampling Programs: No. of Industries Surveyed	Survey and Sampling Programs: No. of Industries Sampled
3271 Concrete block and brick	3	50	--	--	--	1	1
3272 Concrete products, nec*	14	221	4	4	1	1	--
3281 Cut stone and stone products	9	76	--	--	--	2	--
3291 Abrasive products	4	127	1	1	1	6	2
3293 Gaskets, packing and sealing devices	2	268	--	--	--	1	1
3297 Nonclay refractories	2	134	--	--	--	1	--
3299 Nonmetallic mineral products, nec*	5	105	--	--	--	1	--
3312 Blast furnaces and steel mills	10	24107	3	2	3	4	--

-- Means no data
[a] From: 1972 Pennsylvania County Industrial Report, Allegheny County. Bureau of Statistics. Release M-5-71, County Report Series 73212. 1971. P.33-43.
* Not Elsewhere Classified

TABLE C-1 (continued)

SIC Number	No. of Industries in SIC[a]	No. of Employees in SIC[a]	Questionnaire Response: No. of Industries	Questionnaire Response: Responses with Sewer Discharge Quality Data	Questionnaire Response: Responses with Hazardous Material Inventory Data	Survey and Sampling Programs: No. of Industries Surveyed	Survey and Sampling Programs: No. of Industries Sampled
3316 Cold finishing of steel shapes	1	418	1	1	1	1	2
3317 Steel pipe and tubes	1	50	1	--	1	2	1
3321 Gray iron foundries	5	966	6	3	5	3	3
3325 Steel foundries, nec*	5	957	--	--	--	--	1
3341 Secondary nonferrous metals	3	53	--	--	--	3	--
3361 Aluminum foundries	2	50	3	1	2	1	1
3362 Brass, bronze, and copper foundries	9	581	10	7	9	5	4
3399 Primary metal products, nec*	6	270	--	--	--	3	3
3411 Metal cans	1	1117	--	--	--	--	--

-- Means no data

[a] From: 1972 Pennsylvania County Industrial Report, Allegheny County. Bureau of Statistics. Release M-5-71, County Report Series 73212. 1971. P.33-43.

* Not Elsewhere Classified

TABLE C-1 (continued)

SIC Number			Questionnaire Response			Survey and Sampling Programs	
	No. of Industries in SIC[a]	No. of Employees in SIC[a]	No. of Industries	Responses with Sewer Discharge Quality Data	Responses with Hazardous Material Inventory Data	No. of Industries Surveyed	No. of Industries Sampled
3425 Hand saws and saw blades	2	77	2	--	1	1	1
3432 Plumbing fittings and brass goods	1	223	--	--	--	1	--
3433 Heating equipment, except electric	8	161	--	--	--	1	--
3441 Fabricated structural metal	18	4224	3	2	1	11	2
3443 Fabricated plate work (boiler shops)	10	860	1	1	1	4	2
3444 Sheet metal work	15	613	2	1	2	4	--
3446 Architectural metal work	16	676	2	1	1	3	2
3449 Miscellaneous metal work	8	169	2	1	2	1	--

[a] -- Means no data
From: 1972 Pennsylvania County Industrial Report, Allegheny County. Bureau of Statistics. Release M-5-71, County Report Series 73212. 1971. P.33-43.

TABLE C-1 (continued)

SIC Number	No. of Industries in SIC[a]	No. of Employees in SIC[a]	Questionnaire Response: No. of Industries	Questionnaire Response: Responses with Sewer Discharge Quality Data	Questionnaire Response: Responses with Hazardous Material Inventory Data	Survey and Sampling Programs: No. of Industries Surveyed	Survey and Sampling Programs: No. of Industries Sampled
3451 Screw machine products	8	157	--	--	--	3	1
3471 Plating and polishing	16	163	4	2	4	18	8
3479 Metal coating and allied services	8	200	1	--	1	4	2
3493 Steel springs, except wire	6	290	2	1	1	4	1
3494 Valves and pipe fittings	5	325	3	2	2	6	2
3498 Fabricated pipe and fittings	8	740	7	5	5	7	4
3531 Construction machinery	1	156	--	--	--	1	--
3532 Mining machinery	3	94	--	--	--	2	--
3534 Elevators and moving stairways	1	60	--	--	--	1	--

-- Means no data

[a] From: 1972 Pennsylvania County Industrial Report, Allegheny County. Bureau of Statistics. Release M-5-71, County Report Series 73212. 1971. P.33-43.

TABLE C-1 (continued)

SIC Number			Questionnaire Response			Survey and Sampling Programs	
	No. of Industries in SIC[a]	No. of Employees in SIC[a]	No. of Industries	Responses with Sewer Discharge Quality Data	Responses with Hazardous Material Inventory Data	No. of Industries Surveyed	No. of Industries Sampled
3541 Machine tools, metal cutting types	3	48	2	1	2	3	1
3544 Special dies, tools, jigs, and fixtures	17	210	1	--	1	4	--
3545 Machine tool accessories	3	566	1	--	1	1	--
3547 Rolling mill machinery	--	--	1	1	--	--	--
3548 Metal working machinery, nec*	6	2640	--	--	--	--	--
3551 Food products machinery	4	239	2	1	1	3	1
3555 Printing trades machinery	3	418	--	--	--	2	1
3559 Special industry machinery, nec*	9	231	--	--	--	2	2

-- Means no data

[a] From: 1972 Pennsylvania County Industrial Report, Allegheny County. Bureau of Statistics. Release M-5-71, County Report Series 73212. 1971. P.33-43.

* Not Elsewhere Classified

TABLE C-1 (continued)

SIC Number			Questionnaire Response			Survey and Sampling Programs	
	No. of Industries in SIC[a]	No. of Employees in SIC[a]	No. of Industries	Responses with Sewer Discharge Quality Data	Responses with Hazardous Material Inventory Data	No. of Industries Surveyed	No. of Industries Sampled
3561 Pumps and pumping equipment	4	118	--	--	--	1	1
3562 Ball and roller bearings	2	183	1	1	--	1	--
3564 Blowers and fans	2	251	--	--	--	1	--
3565 Industrial patterns	8	82	--	--	--	1	--
3566 Speed changers, drives, and gears	3	156	--	--	--	1	--
3567 Industrial furnaces and ovens	8	2716	2	2	2	1	1
3569 General industrial machinery, nec*	2	63	--	--	--	1	--
3573 Electronic computing equipment	2	746	--	--	--	1	--

-- Means no data

[a] From: 1972 Pennsylvania County Industrial Report, Allegheny County. Bureau of Statistics. Release M-5-71, County Report Series 73212. 1971. P.33-43.

* Not Elsewhere Classified

TABLE C-1 (continued)

SIC Number			Questionnaire Response			Survey and Sampling Programs	
	No. of Industries in SIC[a]	No. of Employees in SIC[a]	No. of Industries	Responses with Sewer Discharge Quality Data	Responses with Hazardous Material Inventory Data	No. of Industries Surveyed	No. of Industries Sampled
3599 Machinery, except electrical, nec*	40	392	1	--	--	1	--
3612 Transformers	2	1376	2	2	2	--	--
3613 Switchgear and switchboard apparatus	4	10574	3	3	3	1	--
3621 Motors and generators	6	781	2	2	2	1	--
3622 Industrial controls	6	154	1	--	1	--	--
3629 Electrical industrial apparatus, nec*	4	347	--	--	--	--	--
3644 Noncurrent-carrying wiring devices	2	376	--	--	--	1	--
3651 Radio and TV receiving sets	1	6	--	--	--	--	--

-- Means no data

[a] From: 1972 Pennsylvania County Industrial Report, Allegheny County. Bureau of Statistics. Release M-5-71, County Report Series 73212. 1971. P.33-43.

* Not Elsewhere Classified

TABLE C-1 (continued)

SIC Number			Questionnaire Response			Survey and Sampling Programs	
	No. of Industries in SIC[a]	No. of Employees in SIC[a]	No. of Industries	Responses with Sewer Discharge Quality Data	Responses with Hazardous Material Inventory Data	No. of Industries Surveyed	No. of Industries Sampled
3662 Radio and TV communication equipment	1	1115	2	2	2	1	--
3679 Electronic components, nec*	2	51	--	--	--	1	1
3694 Engine electrical equipment	1	51	1	1	1	--	--
3713 Truck and bus bodies	3	105	--	--	--	1	--
3714 Motor vehicle parts and accessories	6	2043	--	--	--	2	1
3731 Shipbuilding and repairing	1	1286	1	1	1	--	--
3811 Engineering and scientific instruments	9	413	1	--	1	4	1
3829 Measuring and controlling devices, nec*	4	271	1	--	1	--	--

-- Means no data

[a] From: 1972 Pennsylvania County Industrial Report, Allegheny County. Bureau of Statistics. Release M-5-71, County Report Series 73212. 1971. P.33-43.

* Not Elsewhere Classified

TABLE C-1 (continued)

SIC Number			Questionnaire Response			Survey and Sampling Programs	
	No. of Industries in SIC[a]	No. of Employees in SIC[a]	No. of Industries	Responses with Sewer Discharge Quality Data	Responses with Hazardous Material Inventory Data	No. of Industries Surveyed	No. of Industries Sampled
3842 Surgical appliances and supplies	12	1603	11	--	8	1	1
3861 Photographic equipment and supplies	21	148	--	--	--	1	2
3949 Sporting and athletic goods, nec*	4	103	1	--	1	1	--
3953 Marking devices	10	497	3	3	3	3	3
3991 Brooms and brushes	3	101	1	1	1	2	--
3993 Signs and advertising displays	13	320	--	--	--	1	1
3999 Manufacturing industries, nec*	6	77	1	1	--	--	--

-- Means no data
[a] From: 1972 Pennsylvania County Industrial Report, Allegheny County. Bureau of Statistics. Release M-5-71, County Report Series 73212. 1971. P.33-43.
* Not Elsewhere Classified

TABLE C-2

AVERAGE DISCHARGE QUANTITY AND QUALITY FOR THE TEN STANDARD INDUSTRIAL CLASSIFICATIONS WITH THE LARGEST FLOW TO THE ALCOSAN SYSTEM

SIC No.	No. of Industries*	Average Flow (gpd)	Suspended Solids (mg/l)	pH	BOD (mg/l)	COD (mg/l)	Total Cadmium (mg/l)	Total Chromium (mg/l)	Total Copper (mg/l)	Total Iron (mg/l)	Total Nickel (mg/l)	Total Zinc (mg/l)
2032	1	1,220,000	30	7.2	4	30	-	0.02	0.09	1.96	0.03	0.13
2013	1	1,130,000	840	6.6	830	3040	0.09	0.07	0.27	2.80	0.37	0.49
2815	1	1,057,000	664	9.9	4000	8300	0.02	0.72	0.01	15.27	0.07	0.41
3079	2	408,000	220	7.4	110	420	0.02	1.38	0.31	4.88	0.03	3.16
2082	1	752,000	570	8.6	1250	1800	0.04	0.02	1.20	9.70	0.07	0.40
8061	4	124,000	200	8.2	140	590	-	0.06	0.19	1.54	-	0.25
2011	5	18,000	440	7.3	250	1580	0.14	1.04	0.30	2.97	0.04	0.43
2026	5	52,000	410	8.5	120	2070	0.07	0.61	1.26	11.08	0.14	1.43
3312	4	58,000	480	7.6	110	310	0.01	0.66	0.23	1.47	0.78	0.68
3842	1	222,000	180	8.3	10	210	0.01	0.06	0.21	5.62	0.03	0.35

* This is not necessarily the number of industries used to calculate the average discharge quality.

Source: ALCOSAN Industrial Discharge Sampling Program

TABLE C-3

LARGEST DISCHARGERS OF VARIOUS WASTEWATER QUALITY PARAMETERS*

	Five Largest Dischargers (Identified by Standard Industrial Classification No.) of the Following Parameters (lb/day)				
Parameter	First SIC No.	Second SIC No.	Third SIC No.	Fourth SIC No.	Fifth SIC No.
SS	3321	2013	2815	2082	3079
BOD	2815	2816	2013	2082	2024
COD	2815	2013	2082	2816	2011
Total Cadmium	2013	3644	3471	2791	3953/2082
Total Chromium	3079	2077	2815	3644	3399
Total Copper	2082	5312	3399	2013	3321
Total Iron	5312	2815	2082	3644	3498
Total Lead	5312	2813	2816	2026	2653
Total Manganese	5312	2032	3321	3441	3498
Total Nickel	4013	3321	2013	3312	5312
Total Zinc	3079	5312	3644	3441	2013
Phenol	2815	3993	2013	3842	3953
Cyanide	2851	2013	3644	2816	2011
Grease	2011	2013	2082	3325	5312

* Source: ALCOSAN Industrial Discharge Sampling Program

APPENDIX D. SURVEY QUESTIONNAIRE, COVER LETTER AND QUESTIONNAIRE INPUT DATA CARD FORMAT

ALLEGHENY COUNTY SANITARY AUTHORITY

3300 PREBLE AVENUE (412) 766-4810 PITTSBURGH, PA. 15233

MEMBERS OF THE BOARD

CHARLES E. COATES
Chairman

JOHN E. CONNELLY
Vice-Chairman

FREDERICK N. EGLER
Secretary

JOHN C. MILLER
Treasurer

DONALD BERMAN
Asst. Secy. - Asst. Treas.

"ALCOSAN"

LEON WALD
Executive Director

WILLIAM E. HERRON
Assistant Director

GEORGE T. GRAY
Chief Engineer

GEORGE A. BRINSKO
Plant Superintendent

VINCENT J. GAROFALO
Maintenance Engineer

RICHARD F. JONES
Chief Counsel

January 28, 1974

Gentlemen:

The Allegheny County Sanitary Authority (ALCOSAN) has just put into operation a new 47 million dollar biological secondary wastewater treatment plant. This new facility incorporates a number of complex treatment processes designed to significantly improve our wastewater treatment efficiency and effectiveness. Although the new treatment plant will be more effective in removing pollutants, it also will be more sensitive to toxic and hazardous materials and will require safeguards to prevent operational upsets. In order to maintain consistent wastewater treatment performance, we are conducting a study to evaluate the service area industrial waste load to determine its potential effects on the new treatment facilities. The results of this study will enable ALCOSAN to meet new water quality standards and better serve its industrial customers. Construction of the secondary treatment plant, as well as performance of this study, is supported in part by grants from the U.S. Environmental Protection Agency.

The enclosed questionnaire is being sent to industries within the ALCOSAN service area. Its purpose is to assist us in identifying and categorizing firms as to type of manufacturing operations, plant size, character of liquid wastes emanating from the plant, point of ultimate disposal of wastewaters, and the potential for accidental discharge of hazardous materials. This information is essential for determining the types of treatment operations and emergency responses that will be required to meet water quality standards and improve the environmental quality of our water resources.

Your cooperation in completing the enclosed questionnaire and returning it promptly is requested. The success of this project depends on this information, and your prompt completion and return of the questionnaire by March 15, 1974, will provide valuable assistance in this direction.

Statistical compilations from the questionnaire data will be made by an independent engineering and research organization. Please direct any questions you may have concerning the enclosed material to Mr. Andrew Pajak at ALCOSAN. He may be reached by telephone (412) 766-4810, Extension 78.

Sincerely yours,

ALLEGHENY COUNTY SANITARY AUTHORITY

Leon Wald

Leon Wald
Executive Director

ALCOSAN SURVEY OF STORED HAZARDOUS MATERIALS AND OF SEWERED INDUSTRIAL WASTES

EXPLANATORY REMARKS

INTRODUCTION – The Allegheny County Sanitary Authority (ALCOSAN) operates and maintains the sewage treatment plant and the interceptor sewer system that serves the City of Pittsburgh and 75 other municipalities in the greater Pittsburgh area.

ALCOSAN has just put into operation a secondary "activated sludge" treatment plant. Numerous treatment processes are employed at this plant. These processes include sedimentation, biological treatment to degrade and otherwise remove additional pollutant components; chlorination for disinfection and odor control; and dewatering and incineration of the settled solids.

The step-aeration activated sludge process operated by ALCOSAN employs bacteria and other microorganisms which utilize sewage materials as food, thereby converting pollutants to carbon dioxide, water, and new microorganisms (biomass or sludge). Because the treatment process involves living organisms, precautions must be taken to assure effective operation.

The organisms in the secondary biological treatment process can adjust to many materials passed into the treatment facility. This adjustment, however, is not instantaneous and requires the build-up of a suitable microbial population. Under normal conditions, this microbial population will adjust to furnish maximum degradation of usable food sources, effectively removing much waste material from the incoming sewage, thus producing a higher quality effluent.

Various modifications in plant operation are possible to ensure biomass production despite changes in the characteristics of the influent which have a detrimental effect. However, certain materials that are extremely harmful to biological activity may, if present in large enough quantities, destroy the biomass. When secondary treatment is thus brought to an end, many days are required to generate a new biomass and during this period the plant effluent may not measure up to current state and federal quality standards.

INDUSTRIAL WASTE SURVEY – ALCOSAN has a continuous sampling program to characterize the sewage influent to the plant. However, since ALCOSAN accepts inputs from numerous sanitary, storm, and combined sewer systems and since the input points are generally miles away from the plant, there is a definite need to characterize harmful sewage influents closer to the sources so that, when discharges of potentially hazardous materials occur, timely preparations can be made at the plant. A survey of industrial waste influents to the system by geographic area is essential.

Data obtained in this questionnaire will be handled statistically to furnish required information. In effect, proper responses to the questionnaire are essential for assessing treatment plant loading and for providing for predictive adjustments at the plant.

STORED HAZARDOUS MATERIALS SURVEY – The inventory of stored hazardous materials in the ALCOSAN service area is of particular importance in the case of emergencies, such as fires, explosions, transportation accidents, etc. As a result of such catastrophes and the response measure commonly undertaken, large quantities of hazardous materials have a high probability of entering the sewerage system. These hazardous materials may not only settle in the sewers but may also create explosive and corrosive conditions within the sewers. More importantly, hazardous materials carried to the treatment plant have the potential of creating explosion and fire hazards or of upsetting treatment processes, especially biological processes.

The purpose of this survey of hazardous materials is to guide the design and implementation of emergency procedures to protect the public health and welfare, as well as to facilitate the development of practices to protect the treatment plant. Based on the results of the survey, special treatment chemicals will be stored at the plant and operating procedures developed and tested.

The categories of hazardous materials presented in the questionnaire instructions will permit a correlation of hazardous materials with preventive and response measures that could be instituted at the treatment plant. These categories were not designed to correspond with conventional groupings. The list of chemicals in each category is extensive but not exhaustive, and is intended in part to provide representative examples.

The survey will be most valuable if respondees make an effort to list individual materials. Only approximate quantities need to be shown. It is irrelevant whether Company "A" has one ton of lye; it is relevent to know that, as a result of a potential accident, one ton of lye may enter the sewer system at a particular interceptor point (which is the form in which the data will be processed).

CONCLUDING REMARKS – The survey questionnaire has been designed for computer processing. It is actually less formidable than it might appear at first sight. An effort has been made to include enough examples in the "Instructions" so that completion of the questionnaire should proceed smoothly. Mr. Pajak, whose telephone number is (412) 766-4810, Extension 78 will be pleased to answer questions regarding the questionnaire.

QUESTIONNAIRE INSTRUCTIONS
Section I and Section II

I. GENERAL

(a) PLEASE READ ALL INSTRUCTIONS CAREFULLY.

(b) A separate questionnaire form should be completed for each company location. If you need additional questionnaire forms or have any questions regarding the survey, contact: Mr. Andrew Pajak, Allegheny County Sanitary Authority, 3300 Preble Avenue, Pittsburgh, Pennsylvania 15233 Phone: 412 766-4810 Ext. 78.

(c) Certain questions will require specific information which will have to be calculated from company operating records. Please read each question carefully and check all calculations.

(d) Place required information in the designated boxed areas. Use a separate box for each number.

II. SPECIFIC

Item 1: Enter ZIP Code.

Item 2-3: If your Standard Industrial Classification (SIC) number is not known, leave the space blank.

Item 4: List the principal products you produce or service you provide at this location. Where several similar articles are produced, use a broader term which will include all or most of the specific ones (e.g., "costume jewelry" to designate the production of bracelets, earrings, and pins). Name the process used for producing the principal product.

Item 5: Indicate the total number of employees who work at this location during normal working operations.

QUESTIONNAIRE INSTRUCTIONS
(Continued: Section II)

Item 6: Indicate the number of shifts, hours per shift, days per week and months per year that your company normally operates.

Item 7: This item applies only to waste discharged to surface waters (e.g., a lake, stream, creek, etc.).

Item 8: This item applies only to waste discharged to the municipal sewer system.

Item 9: This item applies only to waste discharged into the ground, such as septic tanks, leach pits or wells.

Item 10: This item applies only to evaporation lagoons or holding ponds. If wastes flow from these structures to either surface water, municipal sewer or ground discharge points, they should be indicated under one of the other categories and not listed under this item.

Item 11: The maximum amount of principal product produced per normal working month can be expressed in any of the following units:

CODE NO.	UNITS	CODE NO.	UNITS	CODE NO.	UNITS
01	pounds (solid)	15	thousands of gallons (liquid)	29	55-gallon drums (liquid)
02	pounds (liquid)	16	thousands of gallons (solid)	30	thousands of 55-gallon drums (liquid)
03	pounds (gas)	17	millions of gallons (liquid)	31	barrels
04	tons (solid)	18	cubic feet (solid)	32	thousands of barrels
05	tons (liquid)	19	cubic feet (liquid)	33	bushels
06	tons (gas)	20	cubic feet (gas)	34	thousands of bushels
07	thousands of tons (solid)	21	thousands of cubic feet (solid)	35	millions of bushels
08	thousands of tons (liquid)	22	thousands of cubic feet (liquid)	36	square feet
09	thousands of tons (gas)	23	thousands of cubic feet (gas)	37	square yards
10	millions of tons (solid)	24	millions of cubic feet (solid)	38	thousands of square yards
11	millions of tons (liquid)	25	millions of cubic feet (liquid)	39	millions of square yards
12	millions of tons (gas)	26	millions of cubic feet (gas)	40	pieces or units
13	gallons (liquid)	27	55-gallon drums (solid)	41	thousands of pieces or units
14	gallons (solid)	28	thousands of 55-gallon drums (solid)	42	millions of pieces or units

Place the appropriate code number, which corresponds to the units of measure that your are using, in the two-square space provided.

Item 12: The spaces provided under Item 12 will be used to identify the waste characteristics for each of the discharge points indicated in Item 7 through 10.

Discharge type – The first three squares under discharge type will be used to identify the type of discharge point, how many there are, and the treatment provided.

a) Code numbers for discharge type identification

CODE NO.	DISCHARGE POINT
1	surface water
2	municipal sewer
3	underground well or septic tank
4	evaporation lagoon or pond (see instruction for Item 10)

b) Code numbers for treatment type identification

CODE NO.	PRETREATMENT TYPE	CODE NO.	PRETREATMENT TYPE
1	neutralization	5	screening
2	sedimentation	6	chlorination
3	aeration	7	combination
4	lagooning or ponding (see instructions for Item 10)	8	no pretreatment
		9	other

Example: Identification [2] No. [3] Pretreatment [8]

The "2" indicates a municipal sewer connection. The "3" identifies this is the third sewer connection being identified. The "8" indicates no pretreatment is provided.

Discharge Quantity – Indicate the average flow per operating day. This average should be based only on the number of actual days, during the past year, that the discharge was occuring and not the entire calendar year. For example, 300,000 gallons of process water were discharged through the third municipal connection last year. This discharge occured 100 days of that year. The average daily flow should be computed as 300,000/100=3,000 gallons. For new facilities, *this should reflect the best engineering estimates.*

a) Code numbers for units of flow measure

CODE NO.	UNIT OF FLOW
1	gallons/day
2	thousand gallon/day
3	million gallons/day

Quality Characteristics – Indicate the operating daily average discharge waste characteristics for the specified discharge type. Fill the space from left to right. Use as many lines as necessary. When all the characteristics for the specified discharge type have been entered, skip to the next blank row and continue with the next discharge type.

a) Code numbers for Quality Characteristic parameters

CODE NO.	PARAMETERS	CODE NO.	PARAMETERS	CODE NO.	PARAMETERS
01	Maximum temperature	18	Organic nitrogen	35	Manganese as Mn
02	Turbidity	19	Total kjeldahl nitrogen	36	Mercury as Hg
03	Color (dominant wavelength transmittance in millimicrons)	20	Ammonia nitrogen	37	Nickel as Ni
04	Total solids	21	Nitrite nitrogen	38	Selenium as Se
05	Suspended solids	22	Nitrate nitrogen	39	Silver as Ag
06	Dissolved solids	23	Aluminum as Al	40	Zinc as Zn
07	Total volatile solids	24	Barium as Ba	41	Total phosphorus as P
08	Total fixed solids	25	Beryllium as Be	42	Total phosphate as P
09	pH	26	Boron as B	43	Phenols
10	Methyl orange alkalinity as $CaCO_3$	27	Cadmium as Cd	44	Cyanide
11	Phenolphthalein alkalinity as $CaCO_3$	28	Total chromium as Cr	45	Arsenic
12	Methyl orange acidity as $CaCO_3$	29	Chromium (trivalent) as Cr	46	Fluoride
13	Phenolphthalein acidity as $CaCO_3$	30	Chromium (hexavalent) as Cr	47	Pesticide
14	5-day Biochemical oxygen demand (BOD)	31	Copper as Cu	48	Grease
15	Chemical oxygen demand (COD)	32	Total iron as Fe	49	Specific conductance (in micromhos)
16	Total organic carbon (TOC)	33	Dissolved iron as Fe	50	Redox potential (in millivolts)
17	Total surfactants (soaps & detergents)	34	Lead as Pb	51	Chlorine demand

QUESTIONNAIRE INSTRUCTIONS
(Continued: Section II)

b) Code numbers for Quality Characteristic parameter units

CODE NO.	UNITS	CODE NO.	UNITS	CODE NO.	UNITS
1	milligrams per liter (mg/l)	4	pounds per million gallons (lbs/mg)	7	hydrogen ion concentration (pH)
2	parts per million (ppm)	5	Degrees Fahrenheit (°F)	8	Jackson turbidity units (JTU)
3	micromhos per centimeter (umho/cm) (for specific conductance, code #49)	6	millivolts (mv) (for redox potential, code #50)	9	millimicrons (mu) (for color measurement, code #3)

Example: Suppose a plant site has two separate sewer connections, one discharge to an evaporation pond, and provides no pretreatment. One sewer discharge has an average flow per operating day of 900 gallons and has average daily quality characteristics of: 79°F max., 7.2 pH, 73 mg/l BOD, 16 mg/l ammonia nitrogen, 0.12 mg/l total chromium, and 0.05 mg/l total phosphate, during a normal operating day. The second sewer discharge has an average flow per operating day of 5,000 gallons and has average daily quality characteristics of: 73°F max., 7.6 pH, 350 mg/l BOD, and 560 mg/l COD during a normal operating day. The average daily discharge to the evaporation pond is 400 gallons and the quality characteristics are a pH of 6.3 and a color hue of green having a dominant wavelength of 520 millimicrons. This information would be reported in the following manner:

12. Wastewater Quantity and Quality Characteristics

DISCHARGE TYPE			DISCHARGE QUANTITY		QUALITY CHARACTERISTICS										
Identification	Number	Pretreatment	Quantity	Units	Parameter	Quantity	Units	Parameter	Quantity	Units	Parameter	Quantity	Units
2	1	8	900	1	01	79	5	28	7.2	7	14	73	1
					20	16	1	28	0.12	1	42	0.05	1
2	2	8	5	2	01	73	5	09	7.6	7	14	550	1
					15	560	1						
4	1	8	400	1	09	6.3	7	03	520	9			

Item 13: The spaces provided under Item 13 should be used to identify toxic and hazardous materials which are used or stored at your plant.

Review the 28-item "List of Potentially Hazardous Materials by Material Category" and the corresponding "Partial Listing of Specific Hazardous Materials in Each Material Category". (The "Partial Listing" is exemplative, rather than exhaustive.)

Determine the maximum quantity of these materials that you normally have in inventory. Great accuracy is not required; order-of-magnitude and "ballpark" estimates are acceptable. A "common sense" approach is encouraged.

Report your inventory either by individual substance (Option A) or lumped by material category (Option B). Use the proper 4-digit code number for individual substances if you follow Option A. Use the proper 2-digit code number if you follow Option B. You may choose to report some hazardous materials by material category and others individually. However, please use only Option A or Option B for each Material Category (01, 02, etc.). It will be of greatest benefit to you as a citizen and to ALCOSAN if you do report individual substances.

Please use the units-of-measurement code number presented under Item 11, for example: 01 = pounds (solid), 13 = gallons (liquid), 20 = cubic feet (gas).

Example: Suppose a plant site last year stored the following maximum quantities of hazardous materials: 300 pounds of sulfuric acid (H_2SO_4), 200 pounds of hydrochloric acid, 500 pounds of phosphoric acid and 5 tons of sodium hydroxide liquid. This information would be reported in either of the following ways:

13. TOXIC AND HAZARDOUS MATERIAL INVENTORY

OPTION A: By Individual Material **OPTION B: By Material Category**

	AMOUNT NORMALLY IN INVENTORY				AMOUNT NORMALLY IN INVENTORY			
	Material Category	Material	Quantity	Units	Material Category	Material	Quantity	Units
A	06	1517	300	02				
	06	1506	200	02				
	06	1511	500	02				
	09	2414	5	05				
B	06		1000	02				
	09		5	05				

QUESTIONNAIRE INSTRUCTIONS
(Continued: Section II)

Item 14: The spaces provided under Item 14 will be used to identify trade name and industrial chemicals, such as cleaning compounds, which are not readily identifiable under Item 13. List the maximum quantity normally in inventory and use the units code number presented under Item 11 instructions.

Example: Suppose a plant site last year stored a maximum of 30 55-gallon drums of "Clean Bright" liquid cleaner, 500 55-gallon drums of "Sky Blue" paint, 28 55-gallon drums of D-28 Organic Solvents and 28 gallons of Metal S-13 Etching Solution. This information would be reported in the following manner:

MATERIAL NAME	MATERIAL IDENTIFICATION	QUANTITY	UNITS
CLEAN BRIGHT	LIQUID CLEANER	30	29
SKY BLUE	OIL BASE PAINT	500	29
D-28	ORGANIC SOLVENT	28	29
METAL S-13	ETCHING SOLUTION	28	13

LIST OF POTENTIALLY TOXIC AND HAZARDOUS MATERIALS BY MATERIAL CATEGORY
(For Use with Option B of Item 13)

01 ELEMENTS (selected metals, etc., essentially water inert)
02 SELECTED MINERALS (essentially insoluble and inert in water)
03 SALTS (from low and medium atomic weight elements)
04 SALTS (lower solubility, low to medium toxicity)
05 SALTS (heavy metal-containing, mostly soluble)
06 ACIDS (mineral, strong organic, acid oxides, etc.)
07 SHORT CHAIN ORGANIC ACIDS
08 LONG CHAIN AND CYCLIC ORGANIC ACIDS
09 CAUSTICS, ALKALIES, BASES, ETC.
10 OXIDES (heavy metal; also some carbonates, phosphates, sulfides)
11 INSECTICIDES, HERBICIDES, FUNGICIDES AND RODENTICIDES
12 PHENOLS AND CRESOLS
13 POISONS (metal-containing: see also #17)
14 POISONS (halogenated hydrocarbons)
15 POISONS (halogen-free and metal-free)
16 RADIOACTIVE MATERIALS
17 HEAVY METAL ORGANICS
18 FLAMMABLE HYDROCARBONS
19 NON-FLAMMABLE HYDROCARBONS
20 FLAMMABLE HYDROCARBON DERIVATIVES
21 NON-FLAMMABLE HYDROCARBON DERIVATIVES
22 COMPRESSED GASES
23 MISCELLANEOUS AND SPECIAL MATERIALS

PARTIAL LISTING OF SPECIFIC HAZARDOUS MATERIALS IN EACH MATERIAL CATEGORY
(For Use with Option A of Item 13)

01 ELEMENTS (Selected metals, etc. Essentially water inert).
0001 Aluminum
0002 Barium
0003 Bismuth
0004 Cadmium
0005 Carbon
0006 Chromium
0027 Cobalt
0007 Copper
0008 Iron
0009 Lead
0010 Magnesium
0011 Manganese
0012 Molybdenum
0013 Nickel
0014 Selenium
0015 Silicon
0016 Sulfur
0017 Tantalum
0018 Tellurium
0019 Tin
0020 Titanium
0021 Tungsten
0022 Vanadium
0023 Zinc
0024 Zirconium
0025 Mixtures of solid elements of this general type
0026 All other solid elements of this type (more or less inert in water)

DO *include granular material and powder that can be flushed into a sewer*
DO NOT include ingots, chunks, shapes, etc.

02 SELECTED MINERALS (Essentially insoluble and inert in water, including oxides, phosphates, silicates, sulfates, sulfides)
0301 Aluminum oxide/phosphate/silicate/fluoride
0302 Calcium carbonate
0303 Calcium fluoride
0304 Calcium hydroxide (slaked lime)
0305 Calcium phosphate/silicate/sulfate
0306 Chromium oxide (Cr_2O_3) (insoluble)
0307 Chromium sulfide
0308 Copper sulfide
0309 Iron oxide/phosphate/silicate
0310 Magnesium carbonate
0311 Magnesium oxide (magnesia)
0312 Manganese oxide/sulfide/carbonate
0313 Nickel silicate/sulfide
0314 Silicon dioxide (silica)
0315 Tantalum oxide
0316 Titanium dioxide (titania, rutile, anatase)
0317 Tungsten oxide
0318 Vanadium oxide pentoxide
0319 Zinc sulfide/silicate oxide
0320 Zirconium oxide/silicate
0321 Mixtures of similar water-inert, insoluble minerals
0322 All other water inert, insoluble minerals, oxides, phosphates, silicates, sulfides, etc.

DO *include granular material and powder that can be flushed into a sewer*
DO NOT include ingots, chunks, shapes, etc.

03 SALTS (From low and medium atomic weight elements, mostly soluble, low toxicity, neutral)
0601 Ammonium chloride
0602 Ammonium nitrate
0603 Ammonium phosphate (mono- and di- hydrogen)
0604 Ammonium sulfate
0605 Calcium bromide
0606 Calcium chloride
0607 Calcium nitrate
0608 Lithium bromide
0609 Lithium chloride
0610 Lithium nitrate
0611 Lithium phosphate (mono- and di- hydrogen)
0612 Lithium sulfate
0613 Potassium bromide
0614 Potassium (or Sodium) chlorate

ALCOSAN SURVEY OF STORED
HAZARDOUS MATERIALS AND OF SEWERED INDUSTRIAL WASTES

(To be retained for your files)

DO NOT ATTEMPT TO COMPLETE THIS FORM BEFORE READING THE ACCOMPANYING INSTRUCTIONS.

O.M.B. No. 158-S 73015
APPROVAL EXPIRES MARCH, 1974

1. Zip Code ☐☐☐☐☐
2. SIC Number(s) ☐☐☐ ☐☐☐
3. Are the basic manufacturing operations and product types indicated in Item 2 current? YES ☐ NO ☐
4. Brief description of principal product or service: _____

_____

_____

_____

5. Total number of employees at this location: ☐☐☐
6. Number of shifts normally worked each day: ☐ at ☐☐ hours each.
   Number of days normally worked each week: ☐
   Number of months normally worked each year: ☐☐
7. Total number of separate surface water discharge points: ☐☐
8. Total number of separate municipal sewer connections: ☐☐
9. Total number of separate underground well or septic tank discharge points: ☐☐
10. Total number of separate evaporation lagoon or holding pond discharges: ☐☐
11. If you are engaged in manufacturing, indicate the maximum amount of principal product produced per normal working month:

    ☐☐☐☐ at ☐☐ units of measure (see instructions)
    ☐☐☐☐ at ☐☐ units of measure (see instructions)

12. WASTEWATER QUANTITY AND QUALITY CHARACTERISTICS

DISCHARGE TYPE			DISCHARGE QUANTITY		QUALITY CHARACTERISTICS								
IDENTIFICATION	NUMBER	PRETREATMENT	QUANTITY	UNITS	PARAMETER	QUANTITY	UNITS	PARAMETER	QUANTITY	UNITS	PARAMETER	QUANTITY	UNITS

13. TOXIC AND HAZARDOUS MATERIAL INVENTORY

AMOUNT NORMALLY IN INVENTORY				AMOUNT NORMALLY IN INVENTORY			
MATERIAL CATEGORY	MATERIAL	QUANTITY	UNITS	MATERIAL CATEGORY	MATERIAL	QUANTITY	UNITS

14. INDUSTRIAL MATERIALS OF UNKNOWN COMPOSITION

MATERIAL NAME	MATERIAL IDENTIFICATION	AMOUNT NORMALLY IN INVENTORY QUANTITY	UNITS

PARTIAL LISTING OF SPECIFIC HAZARDOUS MATERIALS IN EACH MATERIAL CATEGORY
(For Use with Option A of Item 13)

0615 Potassium (or Sodium) chloride
0616 Potassium nitrate
0617 Potassium perchlorate
0618 Potassium (or Sodium) pyrophosphate
0619 Potassium (or Sodium) sulfate
0620 Potassium phosphate (mono- and di- hydrogen)
0621 Sodium ammonium phosphate (microcosmic salt)
0622 Mixtures of above salts
0623 All other similar salts

04 SALTS (From low and medium atomic weight elements, mostly lower solubility, hydrolyzed or oxidizers reducers, low to medium toxicity, including some organic anions).
0901 Aluminum acetate
0902 Aluminum chlorate
0903 Aluminum chloride
0904 Aluminum hydroxide (gel)
0905 Aluminum nitrate
0906 Aluminum sulfate
0907 Ammonium acetate
0908 Ammonium perchlorate
0909 Ammonium sulfide
0910 Calcium acetate
0911 Calcium hypochlorite
0912 Calcium sulfite
0913 Lithium acetate
0914 Magnesium acetate
0915 Magnesium perchlorate
0916 Magnesium sulfate
0917 Potassium (or Sodium) acetate
0918 Potassium (or Sodium) borate
0919 Potassium (or Sodium) citrate
0920 Potassium (or Sodium) cyanate
0921 Potassium (or Sodium) nitrite
0922 Potassium (or Sodium) sulfide
0923 Potassium (or Sodium) sulfite
0924 Potassium (or Sodium) tartrate
0925 Potassium (or Sodium) thiocyanate
0926 Sodium hexametaphosphate
0927 Sodium hydrosulfite
0928 Sodium hyposulfite (thiosulfate)
0929 Sodium metabisulfite
0930 Sodium succinate
0931 Mixtures of above salts
0932 All other similar salts of low and medium atomic weight elements

05 SALTS (Heavy metal-containing, mostly soluble, somewhat toxic)
1201 Ammoniacal copper chloride/sulfate
1202 Ammonium chromate
1203 Ammonium dichromate/bichromate
1204 Ammonium ferricyanide
1205 Ammonium ferrocyanide
1206 Ammonium permanganate
1207 Antimony chloride
1208 Barium acetate
1209 Barium chlorate
1210 Barium chloride
1211 Barium fluoride
1212 Barium nitrate
1213 Cadmium acetate
1214 Cadmium carbonate
1215 Cadmium chloride
1216 Cadmium nitrate
1217 Cadmium phosphate
1218 Cadmium sulfate
1219 Chrome alum
1220 Chrome colors
1221 Chromium acetate
1222 Chromium carbonate
1223 Chromium chloride
1224 Chromium nitrate
1225 Chromium sulfate
1226 Cobalt chloride/nitrate sulfate
1227 Copper acetate
1228 Copper chloride
1229 Copper nitrate
1230 Copper sulfate
1231 Iron acetate
1232 Iron ammonium sulfate
1233 Iron chloride
1234 Iron Nitrate
1235 Iron sulfate
1236 Manganese acetate
1237 Manganese chloride
1238 Manganese nitrate
1239 Manganese phosphate
1240 Manganese sulfate
1241 Molybdenum salts
1242 Nickel acetate
1243 Nickel ammonium sulfate
1244 Nickel ammonium chloride
1245 Nickel carbonate
1246 Nickel chloride
1247 Nickel nitrate
1248 Nickel phosphate
1249 Nickel sulfate
1250 Potassium (or Sodium) chromate
1251 Potassium (or Sodium) dichromate
1252 Potassium (or Sodium) ferricyanide
1253 Potassium (or Sodium) ferrocyanide
1254 Potassium (or Sodium) permanganate
1255 Mixtures of above salts
1256 All other salts of this type

06 ACIDS (Mineral, strong organic, acid oxides, etc.)
1501 Chloroacetic (mono-, di & tri-chloroacetic)
1502 Chloroacetyl chloride
1503 Chlorosulfonic
1504 Chromic (CrO_3, sometimes in H_2SO_4)
1505 Hydrobromic (liquid)
1506 Hydrochloric (liquid)
1507 Hydrofluoric (liquid)
1520 Hydrogen chloride (gas)
1508 Nitric
1509 Nitrogen pentoxide
1510 Perchloric
1511 Phosphoric
1512 Phosphorus oxychloride
1513 Phosphorus pentoxide
1514 Phosphorus trichloride
1515 Sodium bisulfate
1516 Sulfamic
1521 Sulfur dioxide (gas)
1517 Sulfuric
1518 Mixed mineral acids, etc.
1519 All other mineral acids, acidic oxides, etc.

07 SHORT CHAIN ORGANIC ACIDS
1801 Acetic
1802 Acrylic
1803 Butyric
1804 Citric
Formic (See category 15 – Poisons)
1805 Fumaric
1806 Fuoric
1807 Isobutyric
1808 Lactic
1809 Malic
1810 Malonic
Oxalic (See category 15 – Poisons)
1811 Propionic
1812 Succinic
1813 Tartaric
1814 Mixed short chain organic acids
1815 All other short chain organic acids (containing 4 or less carbon atoms)

08 LONG CHAIN AND CYCLIC ORGANIC ACIDS
2101 Adipic
2102 Ascorbic
2103 Benzoic
2104 Capric
2105 Isovaleric
2106 Lauric
2107 Linoleic
2108 Mandelic*
2109 Myristic
2110 Naphthoic*
2111 Oleic

PARTIAL LISTING OF SPECIFIC HAZARDOUS MATERIALS IN EACH MATERIAL CATEGORY
(For Use with Option A of Item 13)

08 Long chain and cyclic organic acids (Continued)
- 2112 Palmitic
- 2113 Phthalic*
- 2114 Picolinic*
- Picric (See category 15 – Poisons)
- 2115 Pyrotartaric
- 2116 Salicylic*
- 2117 Stearic
- 2118 Terephthalic*
- 2119 Valeric
- 2120 Mixed long chain organic acids
- 2121 All other long chain organic acids (containing 5 or more carbon atoms)

* Cyclic acids

09 CAUSTICS, ALKALIES, BASES, ETC.
- Aluminum hydroxide (gel) (See category 04 – Salts)
- 2401 Ammonia hydroxide (Aqua ammonia)
- Barium oxide/hydroxide (See category 13 – Poisons)
- 2402 Calcium oxide ("live" lime)
- 2403 Lithium oxide/hydroxide
- 2404 Magnesium hydroxide (slurry, with/without Magnesium carbonate)
- 2405 Potassium bicarbonate
- 2406 Potassium carbonate
- 2407 Potassium hydroxide/oxide
- 2408 Potassium phosphate, tribasic (K_3PO_4)
- 2409 Sodium aluminate (or alkaline aluminum hydroxide)
- 2410 Sodium amide
- 2411 Sodium bicarbonate
- 2412 Sodium carbonate
- 2413 Sodium hexametaphosphate
- 2414 Sodium hydroxide (Sodium oxide)
- 2415 Sodium hypochlorite
- 2416 Sodium peroxide
- 2417 Sodium phosphate, tribasic (Tri-Sodium phosphate, TSP)
- 2418 Sodium silicates (solutions)
- 2419 Sodium tetraborate (borax)
- 2420 Sodium tripolyphosphate
- 2421 Tetramethylammonium hydroxide
- 2422 Mixtures of caustics, alkalies and hydroxides
- 2423 All other caustics, alkalies and hydroxides

10 OXIDES (Heavy metal – also some carbonates, sulfides, phosphates)
- 2701 Antimony oxides
- 2702 Barium carbonate
- 2703 Bismuth oxide
- 2704 Cadmium oxide/sulfide
- 2705 Cobalt oxide/silicate
- 2706 Copper oxide/silicate
- 2707 Lead oxide/sulfide
- 2709 Molybdenum oxides
- 2710 Nickel oxide
- 2711 Tin oxide
- 2714 Mixtures of oxides of this type
- 2715 All other oxides of this type

DO include granular material and powder that can be flushed into a sewer
DO NOT include ingots, chunks, shapes, etc.

11 INSECTICIDES, HERBICIDES, FUNGICIDES AND RODENTICIDES*

FUNGICIDES
- 3001 DMTT (3, 5-Dimethyl-1, 3, 5, 2H-tetrahydrothiadiazine-2-thione)
- 3002 Mercury fungicides
- 3003 Naphthenic acid, copper salt
- 3004 PCP (Pentachlorophenol)
- 3005 Dithiocarbamic acid salts including Ferbam, maneb, Metham, Nabam and Zineb, plus the other Dithiocarbamates.
- 3006 All other fungicides including Benomyl, Captafol, Captan, Dinocap, Folpet, Pentachloronitrobenzene, Sodium Pentachlorophenate, Tri- and Tetra-Chlorophenols (including 2, 4, 5 -Trichlorophenol and its salts).

HERBICIDES AND PLANT HORMONES
- 3007 MH (Maleic hydrazide) (1, 2-Dihydropyridazine-3, 6-dione)
- 3008 2, 4-D esters and salts (2, 4-Dichlorophenoxyacetic acid)
- 3009 2, 4, 5-T (2, 4, 5-Trichlorophenoxyacetic acid, esters and salts)
- 3010 Methanearsonic acid salts
- 3011 Silvex [2-(2, 4, 5-Trichlorophenoxyl)] Propionic acids and esters
- 3012 All other Herbicides and plant hormones including Acetanilide compounds, Amiben, esters and salts, Barban, Benefin, Bensulfide, Dicamba, Dimethylurea compounds, Dinitrophenol compounds, Endothal, Isopropyl Phenylcarbamates (IPC and CIPC), MCPA, Molinate, NPA, Picloram, Propanil, Triazines, Trifluralin, Uracils, Cacodylic acid, CDAA, Dalapon, Thiocarbamate, Thiolcarbamate, Organophosphorus herbicides, and Sodium TCA.

INSECTICIDES AND RODENTICIDES
- 3013 Aldrin-Toxaphene group including Aldrin, Chlordane, Dieldrin, Endrin, Heptachlor, Toxaphene and Dilan.
- 3014 DDT (Dichlorodiphenyltrichloroethane)
- 3015 Parathion
- 3016 Methyl Parathion
- 3017 All other Organophosphorus insecticides including Azinphosmethyl, Carbophenothion, Coumaphos, Diazinon, Dioxathion, Fensulfothion, Ronnel, Chlorthion, Co-Ral, DDUP, Demeton, Guthion, Malathion, Phorate, Phosdrin, Schradan, TEPP, Trichlorofon.
- 3018 All other insecticides and rodenticides including Carbofuran, Chlorobenzilate, Dicofol, Endosulfan, Methoxychlor and other chlorinated insecticides, Carbaryl, insect attractants, DEET and other insect repellents, Lindane, Piperonyl Butoxide and other synergists, Sodium Fluoroacetate, Thallium salts and Warfarin.

* To improve readability, no registered trademarks are shown.

12 PHENOLS AND CRESOLS
- 3301 Cresols
- 3302 Cresylic acid
- 3303 Nitrophenol
- Pentachlorophenol (See category 11 – Insecticides)
- 3305 Phenol
- 3306 Phenol acetate (Phenyl acetate)
- 3307 Sodium phenoxide
- 3308 Trichlorophenol
- 3309 Mixtures of phenols and cresols
- 3310 All other compounds or mixtures of compounds containing phenol

13 POISONS (Metal-Containing)
- 3601 Antimony pentafluoride
- 3602 Antimony potassium tartrate (tartar emetic)
- 3603 Arsenic acid (arsenic pentoxide)
- 3604 Arsenic trichloride
- 3605 Arsenic metal
- 3606 Arsenious acid (arsenic trioxide)
- 3607 Barium oxide/hydroxide
- 3608 Beryllium (especially powder/dust)
- 3609 Beryllium chloride
- 3610 Beryllium nitrate
- 3611 Beryllium oxide
- 3612 Beryllium sulfate
- 3613 Bismuth dipropyl acetate
- 3614 Bismuth oxide
- 3615 Bismuth subgallate
- 3616 Bismuth subnitrate
- 3617 Bismuth suboxide
- 3618 Bismuth subsalicylate
- 3619 Cacodylic acid
- 3620 Cadmium cyanide
- 3621 Calcium arsenate
- 3623 Copper arsenate
- 3624 Copper carbonate, basic
- 3625 Copper cyanide
- 3626 Copper formate
- 3627 Ferric arsenate/arsenite
- 3628 Ferrous arsenate
- 3629 Hydrocyanic acid
- 3630 Lead acetate
- 3631 Lead arsenate
- 3632 Lead carbonate, basic
- 3633 Lead chloride
- 3634 Lead fluoborate
- 3635 Lead nitrate
- 3636 Lead sulfate
- 3637 Magnesium cyanide
- 3656 Mercury (metallic)
- 3638 Mercury chlorides (calomel and dichloride of mercury)
- 3639 Mercury nitrate/acetate
- 3640 Mercury oxide
- 3641 Phenyl mercuric acetate/chloride
- 3642 Potassium cyanide
- 3643 Potassium formate
- 3644 Silver acetate
- 3645 Silver cyanide
- 3646 Silver nitrate
- 3647 Sodium arsenate
- 3648 Sodium arsenite
- 3649 Sodium cyanide
- 3650 Sodium formate

PARTIAL LISTING OF SPECIFIC HAZARDOUS MATERIALS IN EACH MATERIAL CATEGORY
(For Use with Option A of Item 13)

13 Poisons (Continued)
3651 Thallium chloride
3652 Thallium sulfate
3653 Zinc phosphide
3654 Mixtures of inorganic poisons
3655 All other inorganic poisions of this type

14 POISONS (Halogenated hydrocarbons)
3901 Acetyl bromide
3902 Acetyl chloride
3903 Allyl chloride
3904 Benzyl chloride
3905 Bromochloromethane
3906 Bromoform
Chlorobenzene (See category 20 – Flammable Hydrocarbon Derivatives)
Chloroform (See category 21 – Non-Flammable Hydrocarbon Derivatives)
3909 Chloronaphthalenes
3910 Chloronitrobenzenes
3911 Chloropicrin
3912 Ethylene Chlorohydrin
3913 Fluoroacetamide
3914 Fluoroacetate
3915 Hexachloroacetone
3916 Hexachloroethane
3917 Methacholine chloride
3918 Methyl bromide
3919 Methyl chloroform
3921 Pentachloroethane
3922 Tetrachloroethylene
3923 Mixtures of halogenated hydrocarbon poisons
3924 All other halogenated hydrocarbon poisons of this type

15 POISONS (Metal-free and halogen-free; essentially organic)
Acetic anhydride (See category 20 – Flammable Hydrocarbon Derivatives)
4202 Acetone cyanohydrin
4203 Acrolein
4204 Allyl alcohol
4205 Aminopyridine
Anthracene (See category 19 – Non-Flammable Hydrocarbons)
4207 Aurantine
4208 Benzidines
4209 Benzylamine
4211 Butylamine
Carbon disulfide (See category 20 – Flammable Hydrocarbon Derivatives)
4213 Cyclohexanol
4214 Dibenzylamine
4215 Diethyl sulfate
4216 Formic acid
4217 Hexaethyl tetraphosphate
4218 Hydrazine hydrate
4220 Methyl sulfate
4221 Nicotine
4222 Nitrobenzol
4223 Organic cyanide compounds
4224 Oxalic acid
4227 Picric acid
4228 Tetraethyl pyrophosphate
4229 Mixtures of poisons of this type
4230 All other poisons of this type

16 RADIOACTIVE MATERIALS
4501 Antimony Sb-125
4502 Arsenic As-76
4503 Carbon C-14
4504 Cerium Ce-144
4505 Cesium Cs-134 and Cs-137
4506 Cobalt Co-60
4507 Copper Cu-64
4508 Iodine I-131
4509 Iron Fe-59
4510 Krypton Kr-85
4511 Niobium Nb-95
4512 Phosphorus P-32
4513 Plutonium
4514 Polonium
4515 Potassium K-42
4516 Praseodymium Pr-144, Pr-143
4517 Promethium Pm-147
4518 Radium
4519 Rhodium Rh-106
4520 Ruthenium Ru-103 and Ru-106
4521 Strontium Sr-90
4522 Sulfur S-35
4523 Thorium
4524 Tritium H-3
4525 Uranium
4526 Yttrium Y-90
4527 Zinc Zn-65
4528 Zirconium Zr-95
4529 Mixtures of radioactive materials
4530 All other radioactive materials

17 HEAVY METAL ORGANICS
4801 Biphenyl mercury
4802 Dibenzyltin dichloride/Methyltin trichloride
4803 Dibutyl zinc
4804 Diethyl zinc
4805 Dimethyl mercury/"Methyl mercury"
4806 Tetraethyl lead
4807 Triethyl aluminum
4808 Triethyl lead
4809 Triphenyl antimony
4810 Triphenyl bismuth
4811 Mixtures of heavy metal organics
4812 All other heavy metal organics

18 FLAMMABLE HYDROCARBONS
5101 Benzene
5102 Bunker "C"
5103 Butyl toluene
5104 Crude oil
5105 Cumene
5106 Cyclohexane
5107 Diesel oil
5108 Ethylbenzene
5109 Gasoline
5110 Kerosene
5111 Naphthalene
5112 Petroleum ether
5113 Styrene
5114 Toluene
5115 Turpentine (or flammable hydrocarbon derivatives)
5116 Urethane
5117 Varnish Makers & Painters Naphtha (V. M. & F.)
5118 Xylene
5119 Mixtures of flammable hydrocarbons
5120 All other flammable hydrocarbons

19 NON-FLAMMABLE HYDROCARBONS
5401 Anthracene
5402 Asphalt
5403 Cylinder lube oil stock/cutting oils
5404 Petrolatum
5405 Phenanthrene
5406 Polyethylene
5407 Polypropylene
5408 Polystyrene
5409 Polyurethane
5410 Transformer oil
5411 Turbine lube oil stock
5412 Mixtures of non-flammable hydrocarbons
5413 All other non-flammable hydrocarbons with flash points greater than 200° F

DO include granular material and powder that can be flushed into a sewer.

DO NOT include fibers, chunks, shapes, i.e., sheeting or packing materials.

20 FLAMMABLE HYDROCARBON DERIVATIVES
5701 Acetic anhydride
5702 Acetone
5703 Acetaldehyde
5704 Acetonitrile
5705 Alkylamines
5706 Amyl acetate
5707 Amyl alcohol
5708 Aniline
5709 Butanol
5710 Butyl acetate
5711 Carbon disulfide

PARTIAL LISTING OF SPECIFIC HAZARDOUS MATERIALS IN EACH MATERIAL CATEGORY

(For Use with Option A of Item 13)

20 Flammable Hydrocarbon Derivatives (Continued)

5712 Chlorobenzene
5713 Ethanol
5714 Ethyl acetate
5716 Ethylene diamine
5717 Ethylene dichloride
5718 Ethylene oxide
5719 Formaldehyde
5720 Furfural
5721 Isopropanol
5722 Methanol
5723 Methyl chloride
5724 Methyl ethyl ketone
5725 Nitrobenzene
5726 n-Propyl alcohol
5727 Propylene oxide
5728 Pyridine
5729 Vinyl chloride
5730 Mixtures of flammable hydrocarbon derivatives
5731 All other flammable hydrocarbon derivatives

21 NON-FLAMMABLE HYDROCARBON DERIVATIVES

6001 Alkyl aryl sulfonate
6002 Carbon tetrachloride
6003 Cellulose acetate*
6004 Chloroform
6005 Dialkyl phthalates
6006 Dimethyl terephthalate
6007 Diphenylamine
6008 Ethylene glycol
6009 Glycerin
6010 Pentaerythritol
6011 Perchloroethylene
6012 Polyvinyl chloride
6017 Toluene di-isocyanate
6013 Trichloroethylene
6014 Urea
6015 Mixtures of non-flammable hydrocarbon derivatives
6016 All other non-flammable hydrocarbon derivatives

*DO include granular materials and powder that can be flushed into a sewer
* DO NOT include fibers, chunks, shapes, etc.

22 COMPRESSED GASES

6301 Acetylene
6302 Ammonia (including anhydrous)
6303 Boron trifluoride
6304 Bromine
6305 Butadiene
6306 Butane
6308 Carbon monoxide
6309 Chlorine
6310 Chlorine dioxide
6311 Ethane
6312 Ethylene
Ethylene oxide (See category 20 – flammable hydrocarbon derivatives)
6314 Fluorine
6315 Freon
6316 Hydrogen
Hydrogen chloride (See category 06 – Acids)
6318 Hydrogen cyanide
6319 Hydrogen fluoride
6320 Hydrogen sulfide
6321 Methane
6322 Nitrogen dioxide
6324 Nitrosyl chloride
6325 Nitrous oxide (laughing gas)
6327 Phosgene
6329 Propane
6330 Propylene
Sulfur dioxide (See category 06 – Acids)
6333 Mixtures of compressed gases
6334 All other compressed gases

23 MISCELLANEOUS AND SPECIAL MATERIALS

6601 Calcium carbide/cyanamide
6602 Cyanogen
6603 Hydrogen peroxide (H_2O_2)
6604 Phosphorus
6609 Phosphorus pentasulfide
6605 Potassium
6606 Sodium
6607 NaK (sodium and potassium mixture)
6608 PCB (polychlorinated biphenyls)

ALCOSAN SURVEY OF
STORED HAZARDOUS MATERIALS AND OF
SEWERED INDUSTRIAL WASTES

ALLEGHENY COUNTY SANITARY AUTHORITY
3300 PREBLE AVENUE
PITTSBURGH, PENNSYLVANIA 15233
PHONE: 412/766-4810

TABLE D-1

QUESTIONNAIRE INPUT DATA CARD FORMAT

Card No.	Columns	Description
1	1	Card Number
	2	Blank
	3-7	Industry serial number
	8-12	Interceptor division structure number
	13-17	Zip Code
	18-21	First Standard Industry Classification number
	22-25	Second Standard Industry Classification number
	26-29	Third Standard Industry Classification number
	30-33	Fourth Standard Industry Classification number
	34	Yes answer to Item 3
	35	No answer to Item 3
	36-40	Total number of employees
	41	Number of shifts worked each day
	42-43	Hours worked per shift
	44	Days worked each week
	45-46	Months worked each year
	47-49	Number of separate surface water discharge points
	50-52	Number of separate municipal sewer connections
	53-55	Number of separate underground well or septic tank discharge points
	56-58	Number of separate evaporation lagoon or holding pond discharges

TABLE D-1. (continued)

Card No.	Columns	Description
1	59-63	Amount of principal product produced per month
	64-65	Unit of measure for principal product produced
	66-70	Amount of principal product produced per month
	71-72	Unit of measure for principal product produced
2	1	Card Number
	2	Blank
	3-7	Industry serial number
	8	Discharge identification - type of discharge point code number
	9	Discharge number
	10	Pretreatment type code number
	11-14	Discharge quantity
	15	Discharge quantity units of measure code number
	16-17	Discharge quality characteristic parameter code number
	18-23	Discharge quality characteristic parameter quantity
	24	Discharge quality characteristic parameter quantity units of measure code number
	25-33	
	34-42	
	43-51	Same as 16-24 above for other parameters
	52-60	

TABLE D-1. (continued)

Card No.	Columns	Description
2	61-69	
	69-72	Same as 16-24 above for other parameters
	72-80	
3	1	Card Number
	2	Blank
	3-7	Industry serial number
	8-9	Hazardous Material Category code number
	10-13	Specific Hazardous Material code number
	14-17	Quantity of Hazardous Material
	18-19	Unit of measure of Hazardous Material code number
	20-31	
	32-43	
	44-55	Same as 8-19 above for other hazardous material
	56-67	
	68-79	
4	1	Card Number
	2	Blank
	3-7	Industry serial number
	8-32	Industry name
	33-80	Industry address

TABLE E-1

STORED HAZARDOUS MATERIALS

Material Category	Total Amount Stored (in millions)	Reported Through Questionnaires		
		Primary SIC's Having Stored Materials	Primary Materials In Category	Total Number of Industries Reporting Material Category
Elements	270 Kg (600 lbs)	3312 Blast Furnaces and Steel Mills 2869 Industrial Organic Chemicals	Carbon, Iron Aluminum Silicon Sulfur	49
Selected Minerals	4 Kg (9 lbs)	3231 Products of Purchased Glass 3567 Industrial Furnaces and Ovens 2816 Inorganic Pigments 2819 Industrial Inorganic Chemicals	Silicon Dioxide Magnesium Oxide Calcium Carbonate Calcium Hydroxide	91
Salts of Low to Medium Molecular Weights	14 Kg (30 lbs)	3312 Blast Furnaces and Steel Mills 2052 Cookies and Crackers	Aluminum Sulfate Calcium Chloride Sodium Chloride	109
Salts of Low to Medium Toxicity	9 Kg (20 lbs)	2869 Industrial Organic Chemicals 3621 Motors and Generators 2819 Industrial Inorganic Chemicals	Aluminum Hydroxide Calcium Hypochlorite Sodium Nitrate Calcium Hypochlorite Sodium Hexametaphosphate	92

TABLE E-1. (continued)

Material Category	Total Amount Stored (in millions)	Reported Through Questionnaires		
		Primary SIC's Having Stored Materials	Primary Materials In Category	Total Number of Industries Reporting Material Category
Salts Containing Heavy Metals	.04 Kg (.09 lbs)	4941 Water Supplier 3471 Plating and Polishing 2869 Industrial Organic Chemicals 3229 Pressed and Blown Glass	Iron Sulfate Nickel Sulfate Potassium Dichromate	109
Acids	3.2 Kg (7 lbs)	2819 Industrial Inorganic Chemicals 3362 Brass, Bronze and Copper Foundries 2869 Industrial Organic Chemicals 3312 Blast Furnaces and Steel Mills	Hydrochloric Acid Sulfamic Acid Sulfuric Acid	83
Acids	.75 l (.2 gal)	3621 Motors and Generators 3312 Furnaces and Steel Mills 3316 Cold Finishing of Steel Shapes	Sulfuric Acid Hydrochloric Acid Nitric Acid	89

TABLE E-1. (continued)

Material Category	Total Amount Stored (in millions)	Reported Through Questionnaires		
		Primary SIC's Having Stored Materials	Primary Materials In Category	Total Number of Industries Reporting Material Category
Short Chain Organic Acids	.9 Kg (2 lbs)	2869 Industrial Organic Chemicals 2086 Bottled and canned Soft Drinks 2023 Condensed and Evaporated Milk	Fumeric Acid Citric Acid	39
		2032 Canned Specialty Foods	Acetic Acid	12
Long Chain and Cyclic Organic Acids	2.5 Kg (5.5 lbs)	2819 Industrial Inorganic Chemicals 2869 Industrial Organic Chemicals	Phthalic Acid Adipic Acid	20
	.018 l (.005 gal)	2819 Industrial Inorganic Chemicals 2865 Cyclic Crudes and Intermediates	Oleic Acid	7
Caustics, Alkalies and Bases	9 Kg (20 lbs)	3229 Pressed and Blown Glass 4941 Water Suppliers	Sodium Carbonate	143
	22 l (6 gal)	7397 Commercial Testing Labs 2869 Industrial Organic Chemicals	Sodium Hydroxide	57

TABLE E-1. (continued)

Material Category	Total Amount Stored (in millions)	Reported Through Questionnaires		
		Primary SIC's Having Stored Materials	Primary Materials In Category	Total Number of Industries Reporting Material Category
Oxides	.2 Kg (.5 lbs)	3229 Pressed and Blown Glass 2851 Paints and Allied Products 3233 Products of Purchased Glass	Antimony Oxides Lead Oxide Nickel Oxide	30
Insecticides Herbicides Fungicides, etc.	.003 Kg (.007 lbs) .006 l (.002 gal)	2865 Cyclic crudes and Intermediates 2051 Bread, Cake and related products 2865 Cyclic Crudes and Intermediates	Chlorinated and Organo-phosphorus Insecticides PCP (Pentachlorophenol)	9 10
Phenols and Cresols	.09 Kg (2 lbs) .3 l (.09 gal)	2851 Paints and Allied Products 3312 Blast Furnaces and Steel Mills 2819 Industrial Inorganic Chemicals	Phenol Acetate Phenol and Mixtures of Phenols and Cresols	11 9

TABLE E-1. (continued)

Material Category	Total Amount Stored (in millions)	Reported Through Questionnaires		
		Primary SIC's Having Stored Materials	Primary Materials In Category	Total Number of Industries Reporting Material Category
Poisons (Metal Containing)	.04 Kg (.09 lbs)	3694 Engine Electrical Equipment 3621 Motors and Generators	Potassium Cyanide Sodium Cyanide	84
Poisons (Halogenated Hydrocarbons)	.06 Kg (.14 lbs) .005 l (.001 gal)	2818 Industrial Inorganic Chemicals 2865 Cyclic Crudes and Intermediates	Tetrachloroethylene Methylchloroform	4 6
Poisons (Essentially Organic)	.0004 Kg (.0009 lbs) .0002 l (.00005 gal)	2819 Industrial Inorganic Chemicals 2865 Cyclic Crudes and Intermediates 2816 Inorganic Pigments 2819 Industrial Inorganic Chemicals	Ally Alcohol Cyclohexanol Oxalic Acid	13 3
Radioactive Material	5.5 microcuries	7397 Commercial Testing Labs 8062 General Medical and Hospitals	Cesium Cs-134 and Cs-137	14

TABLE E-1. (continued)

Material Category	Total Amount Stored (in millions)	Reported Through Questionnaires		
		Primary SIC's Having Stored Mateials	Primary Materials In Category	Total Number of Industries Reporting Material Category
Heavy Metal Organics	.002 Kg (.005 lbs)	2851 Paints and Allied Products	Miscellaneous Compounds	1
Flammable Hydrocarbons	38 l (10 gal)	2819 Industrial Inorganic Chemicals 5171 Petroleum Bulk Stations and Terminals 4811 Telephone Comcumications	Bunker "C", Diesel Oil, Gasoline, Kerosene	343
	11 Kg (25 lbs)	2869 Industrial Organic Chemicals	Naphthalene	21
Non-Flammable Hydrocarbons	3 Kg (7 lbs)	3621 Motors and Generators 7218 Industrial Launderers	Polyethylene and Mixtures	20
	1 l (.4 gal)	2951 Paving Mixtures and Blocks 3312 Blast Furnaces and Steel Mills 4225 General Warehousing and Storage	Acetone Acetaldehyde Butylacetate	74
	.0008 cu m (.03 cu ft)	7218 Industrial Launderers	Mixtures	22

TABLE E-1. (continued)

Material Category	Total Amount Stored (in millions)	Reported Through Questionnaires		
		Primary SIC's Having Stored Materials	Primary Materials In Category	Total Number of Industries Reporting Material Category
Flammable Hydrocarbon Derivatives	9 Kg (2 lbs)	2821 Plastic Materials and Resins 2851 Paints and Allied Products	Formaldehyde	17
	8 l (.2 gal)	2869 Industrial Organic Chemicals 2821 Plastic Materials and Resins 3621 Motors and Generators	Butanol Acetone Mixtures	175
Non-Flammable Hydrocarbon Derivatives	43 Kg (95 lbs)	2869 Industrial Organic Chemicals 2819 Industrial Inorganic Chemicals 3079 Miscellaneous Plastic Products	Dialkylphthalates Polyvinylchloride	32
	.2 l (.055 gal)	3662 Radio and TV Communications Equipment 2819 Industrial Inorganic Chemicals 2816 Inorganic Pigments	Trichloroethylene Perchloroethylene Ethylene Glycol	84

TABLE E-1. (continued)

Material Category	Total Amount Stored (in millions)	Reported Through Questionnaires		
		Primary SIC's Having Stored Materials	Primary Materials In Category	Total Number of Industries Reporting Material Category
Compressed Gases	7 l (2 gal)	2851 Paints and Allied Products 4811 Telephone Communications	Freon	15
	.09 Kg (.2 lbs)	2032 Canned Specialties 4941 Water Suppliers	Chlorine Acetylene	66
	.014 cu m (.5 cu ft)	3312 Blast Furnaces and Steel Mills 3441 Fabricated Structural Metal 3621 Motors and Generators 3079 Miscellaneous Plastic Products 2819 Industrial Inorganic Chamicals	Propane Carbon Monoxide	34
Miscellaneous and Special Materials	.09 Kg (.21 lbs)	2851 Paints and Allied Products	Miscellaneous	6
		3662 Radio and TV Communications Equipment 7397 Commercial Testing Labs	Hydrogen Peroxide	4

TABLE F-1 SUMMARY OF PILOT PLANT STUDIES

HMS Study Number	Material	Concentration	Duration	Date	Proportionate Spill Into Treatment Plant At ALCOSAN*
+ 1-1	Cd (from $CdCl_2$)	100 mg/l	.5 hr.	1/2-4	5200 lb. of Cd or 8500 lb. of $CdCl_2$ (approx. 22 400-lb. containers of $CdCl_2$).
+ 1-2	Cd (from $CdCl_2$)	500 mg/l	.5 hr.	2/13-15	26,000 lb. of Cd or 43,000 lb. of $CdCl_2$ (approx. 108 400-lb. containers of $CdCl_2$).
+ 2-2	pH 2.0 H_2SO_4	0.84 ml conc. H_2SO_4 per liter influent	.5 hr.	3/20-22	5300 gal. conc. H_2SO_4 (the equivalent of a tank spill).
+ 3-1	pH 12.0 NaOH	2.4 gm. NaOH per liter influent	.5 hr.	4/3-5	126,000 lb. of NaOH (equivalent to the amount of caustic soda ALCOSAN uses in two years, based on 1972 consumption rate).
+ 4-1	Methanol CH_3OH	1000 mg/l	1 hr.	5/8-10	7900 gallons of methanol.

TABLE F-1 (continued)

HMS Study Number	Material	Influent Concentration	Duration	Date	Proportionate Spill Into Treatment Plant At ALCOSAN*
+ 5-1	Phenol	500 mg/l	.5 hr.	6/5-7	26,000 lb. of phenol (1040 25-lb. drums).
5-2	Phenol	600 mg/l	.5 hr.	10/3-31 + 11/1	31,000 lb. of phenol (1240 25-lb. drums).
6-1	NH_4Cl (Ammonium chloride)	500 mg/l	1 hr.	6/19-21	26,000 lb. of NH_4Cl (104 250-lb. barrels).
+ 7-1	Cu (from $CuSO_4.5H_2O$	100 mg/l	.5 hr.	7/17-21	5200 lb. of Cu or 25,000 lb. of Cu SO_4. $5H_2O$ (80 250-lb. barrels
8-1	Scrubber water	.01 gal scrubber water per gal influent	24 hr.	8/7-9	63,000 gal. of scrubber water.
9-1	"Pickle liquor" -H_2SO_4 -Cr -Fe	5.6 ml/litre influent	1 hr.	8/21-23	35,000 gal. of "pickle liquor".

TABLE F-1 (continued)

HMS Study Number	Material	Influent Concentration	Duration	Date	Proportionate Spill Into Treatment Plant At ALCOSAN*
10-1	No. 2 Fuel oil	8 ml/litre influent	1 hr.	9/18-20	50,000 gal of No. 2 fuel oil (equivalent to a medium size storage tank, 3 railroad tank cars, or 10 tank trucks).
11-1	Perchloro-ethylene	1600 mg/l	1 hr.	10/2-4	6200 gallons of perchloroethylene

* Based on hypothetical flow of 150 MGD in a full-scale plant and the following conditions in the secondary treatment plant: (a) mean MLSS = 1500 mg/l ± 290, (b) SVI = 90 ± 28, and (c) mean air flow=0.012 cu m/l influent - 0.03 (1.6 cu ft/gal-0.4); with the following assumptions: (a) hazardous materials pass unaffected through primary treatment and (b) spill duration is 1 hr.

\+ Runs noted are included in the body of the text and not in Appendix F, with additional data in Appendix K.

Pilot Plant HMS*#5-2 October 30-31 and November 1, 1974
Phenol - 600 mg/l for .5 hr.

The phenol spill resulted in an influent phenol concentration of 600 mg/l for ½ hour. The phenol caused a drop in the BOD removal efficiency from 68% to 9% in the first 4 hours of the run (Figure F-1). The BOD removal efficiency then increased to 70% by the fifth hour and remained between 63% and 87% for the rest of the run. The COD removal efficiency dropped from 81% to 19% in 4½ hours and gradually increased back to base line in 29 hours (Figure F-2). The slow removal efficiency recovery for COD was probably due to phenol showing up in the COD test. The COD removal efficiency trend was the same as was seen for suspended solids removal efficiency and turbidity removal efficiency.

---

* HMS - Hazardous Materials Spills

TABLE F-2

BOD AND COD REMOVAL - PHENOL

Run #5-2						
HOURS AFTER START OF SPILL	INFLUENT BOD UPSTREAM FROM SPILL (mg/l)	INFLUENT BOD DOWNSTREAM FROM SPILL (mg/l)	EFFLUENT BOD (mg/l)	INFLUENT COD UPSTREAM FROM SPILL (mg/l)	INFLUENT COD DOWNSTREAM FROM SPILL (mg/l)	EFFLUENT COD (mg/l)
-2		99	19		181	39
-1.5		96	21		166	31
-1		68	23		220	81
- .5	65	64	21	224	193	85
SPILL .5	73	1190	39	205	405	85
1	75	83	41	205	208	85
1.5	89	88	65	212	224	108
2		164	77		259	189
2.5		141	78		301	169
3		165	96		293	162
3.5		152	114		278	177
4		150	120		278	199
4.5		141	129		248	184
5		137	117		222	180
9+		144	43		229	135
13+		144	42		226	124
21*		116	43		207	94
29*		114	40		218	68
37*		156	20		263	53
43*		128	20		226	53
51*		108	17		244	41

\+ 4 hour composite samples ending on the hour shown.

* 8 hour composite samples ending on the hour shown.

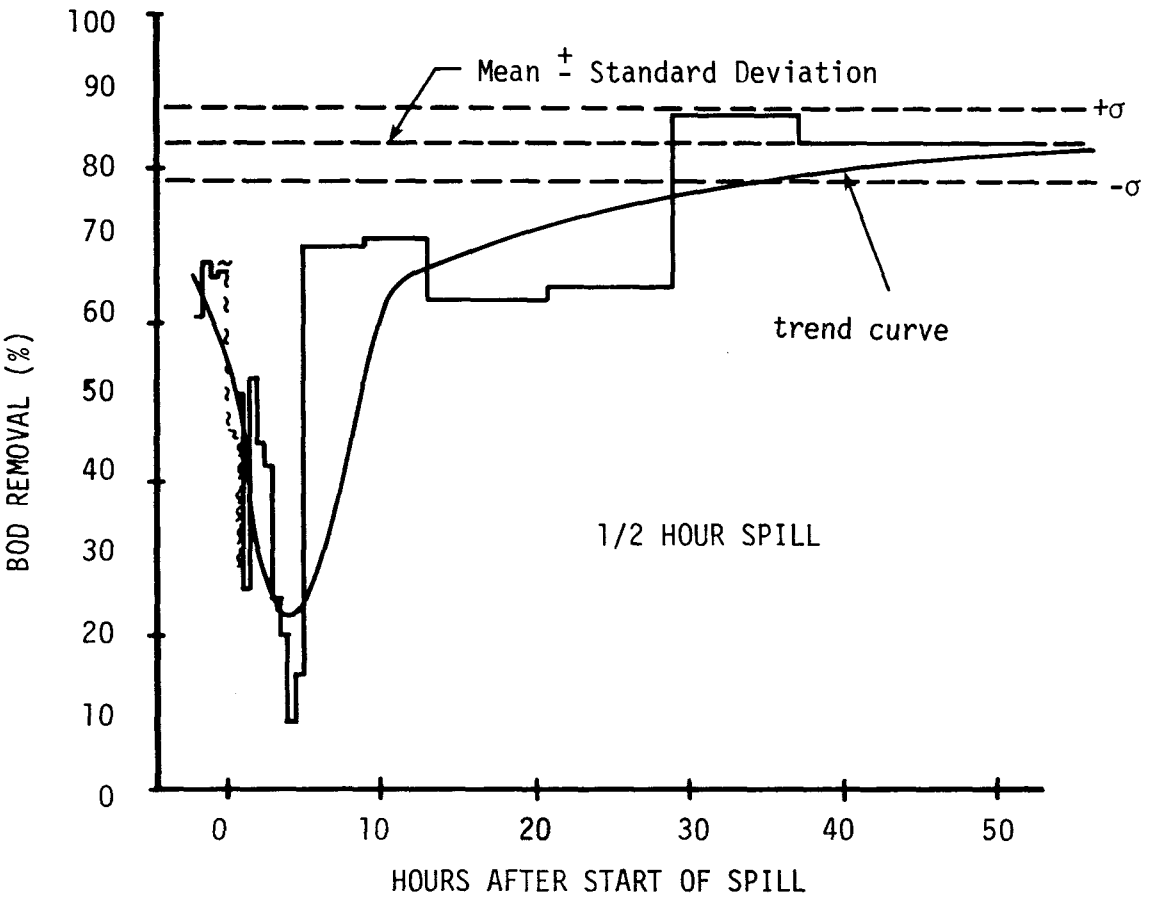

—— Percent removal calculated from influent downstream from SPILL

~ ~ Percent removal calculated from influent upstream from SPILL

FIGURE F-1. BOD REMOVAL VS. TIME
SPILL: 500 mg/l PHENOL

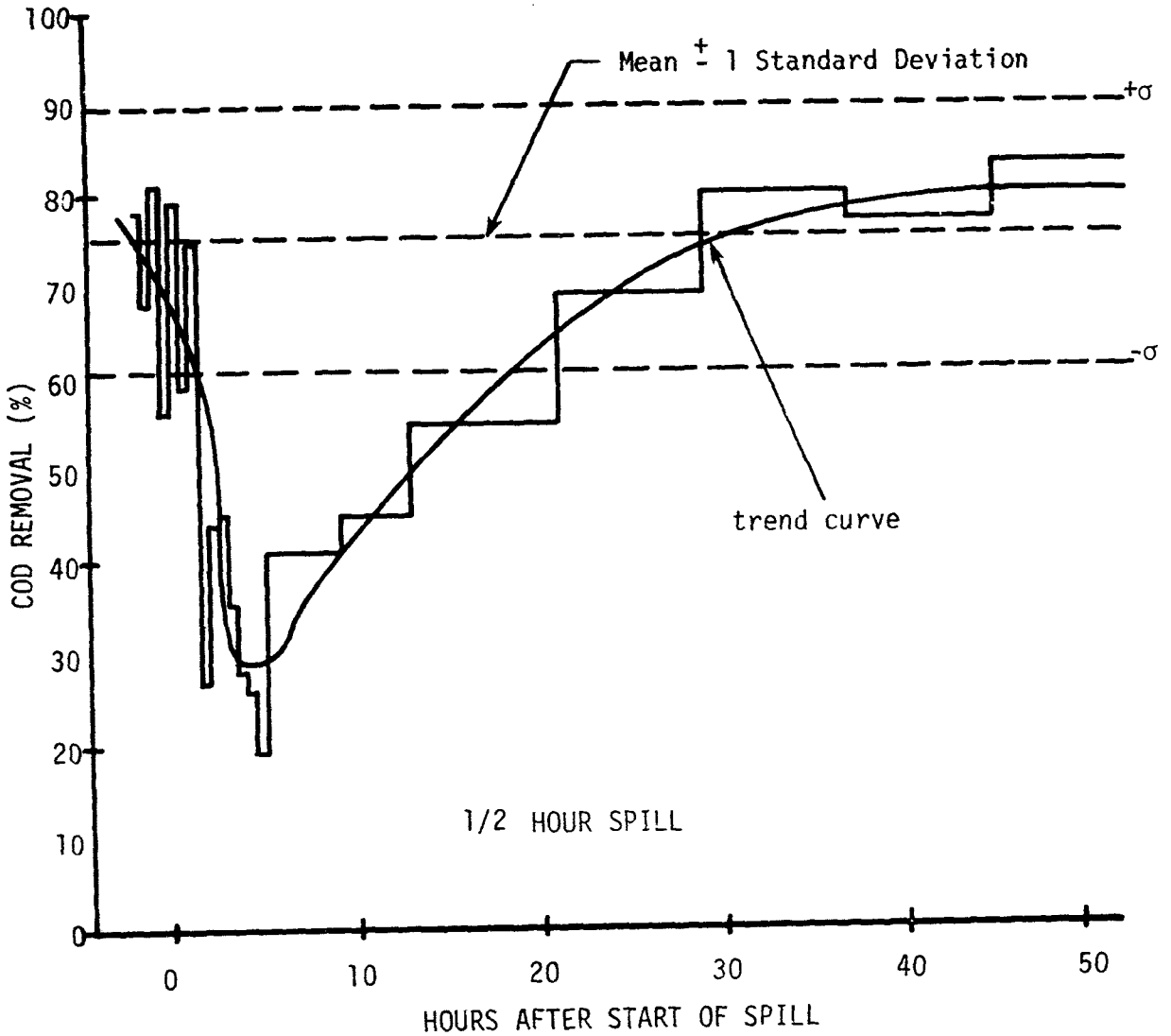

—— Percent removal calculated from influent downstream from SPILL

~ ~ Percent removal calculated from influent upstream from SPILL

FIGURE F-2. COD REMOVAL VS TIME
SPILL: 500 mg/l PHENOL

Pilot Plant HMS* #6-1 June 19-21, 1974
Ammonium Chloride NH_4Cl - 500 mg/l for 1 hour

The ammonium chloride spill resulted in an influent NH_4Cl concentration of 500 mg/l for one hour. The spill had very little effect on the efficiencies of the system. The BOD removal efficiency dropped from 75% to 54% in four and one-half hours and increased to approximately 80% in nine hours where it remained for the rest of the run (Figure F-3). The COD, suspended solids, and turbidity removal efficiencies followed a similar trend. The effluent TKN and NH_3N in the system increased to 37 mg/l and 35 mg/l, respectively, in three hours, but dropped to base line between 2 and 8 mg/l within 4½ hours.

---

* HMS - Hazardous Materials Spill

TABLE F-3

BOD REMOVAL - AMMONIUM CHLORIDE

Run #6-1			
HOURS AFTER START OF SPILL	INFLUENT BOD UPSTREAM FROM SPILL (mg/l)	INFLUENT BOD DOWNSTREAM FROM SPILL (mg/l)	EFFLUENT BOD (mg/l)
-2		--	-- ●
-1.5		--	-- ●
-1		--	-- ●
- .5	--	--	-- ●
SPILL .5	--	--	-- ●
1	--	--	-- ●
1.5	98	90	22
2		94	24
2.5		88	25
3		119	32
3.5		123	47
4		108	44
4.5		125	48
5		126	42
9+		110	36
13+		109	39
21*		105	24
29*		88	18
37*		129	26
43*		112	22
51*		86	18

● BOD Sample lost due to error in analysis.
+ 4 hour composite samples ending on the hour shown.
* 8 hour composite samples ending on the hour shown.

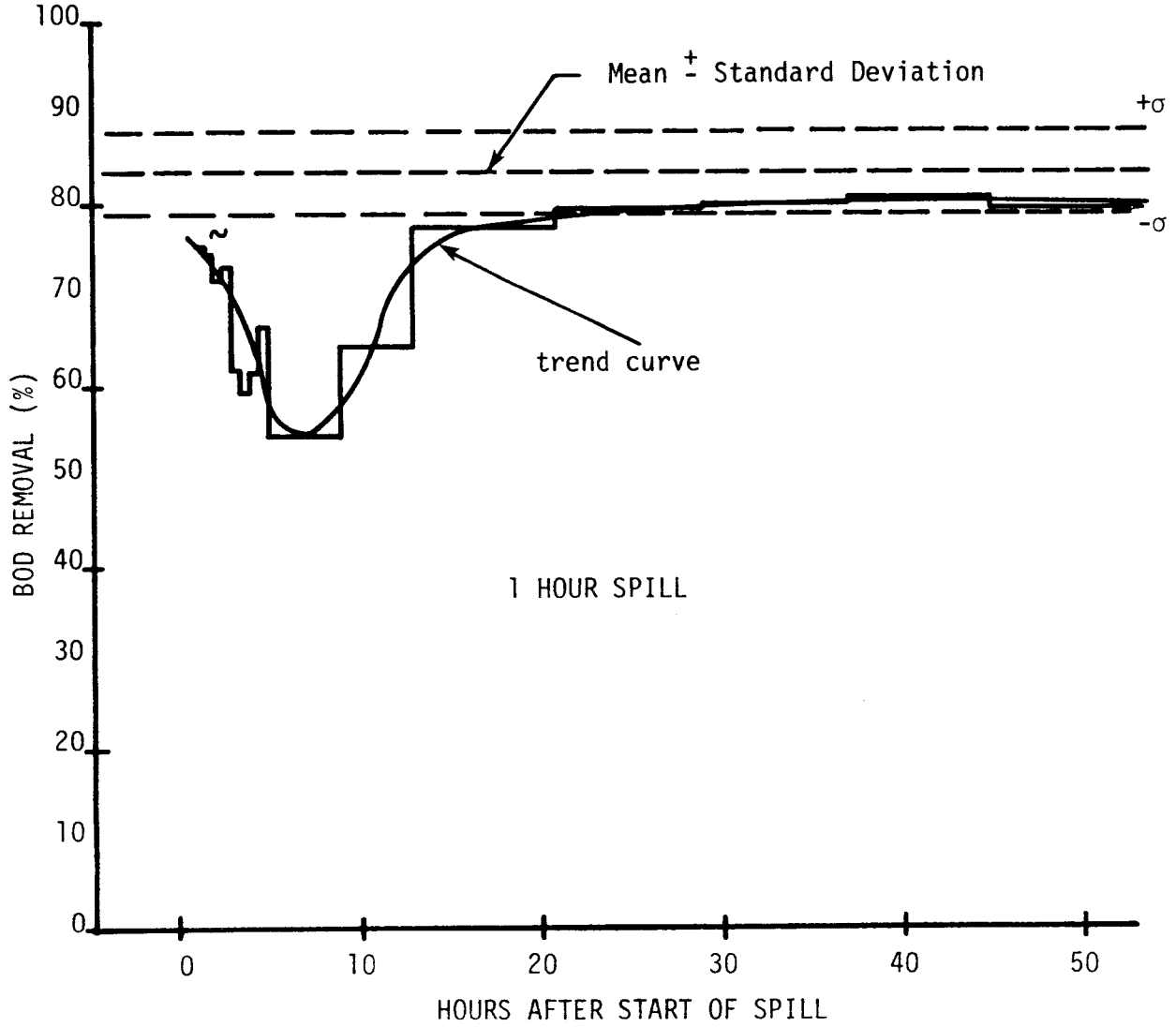

Percent Removal Calculated from Influent Downstream from Spill

Percent Removal Calculated from Influent Upstream from Spill

FIGURE F-3. BOD REMOVAL VS TIME
SPILL: 500 mg/l NH_4Cl

Pilot Plant Study HMS* #8-1 August 7-8, 1974
Unneutralized Scrubber Water, 24-hr. spill

The unneutralized scrubber water had little effect on the removal efficiencies of the treatment system. BOD removal efficiency dropped from a base line mean of 84% to a low of 66%, 11 hours after the start of the spill (Figure F-4). It returned to within one standard deviation of the base line mean two hours after the spill ended. Suspended solids removal efficiencies dropped 3 percentage points below the one standard deviation line for four hours and then increased above the base line mean (a minimal effect). The COD and turbidity removal efficiencies stayed within one standard deviation on the low side throughout the run.

---

* HMS - Hazardous Materials Spill

TABLE F-4

BOD REMOVAL - UNNEUTRALIZED SCRUBBER WATER

Run #8-1			
HOURS AFTER START OF SPILL	INFLUENT UPSTREAM FROM SPILL BOD (mg/l)	INFLUENT DOWNSTREAM FROM SPILL BOD (mg/l)	EFFLUENT BOD (mg/l)
-8		135	17
-4		132	25
SPILL 2	93	96	29
4	92	92	23
6	105	103	21
8	117	111	24
10	106	106	26
12	123	120	40
14	135	132	40
16	132	126	32
18	114	117	24
20	105	114	23
22	117	108	23
24	94	94	23
26	86	83	22
28		97	17
30		123	24
32		100	19
40		106	21
48		124	22
56		89	29
64		213	26

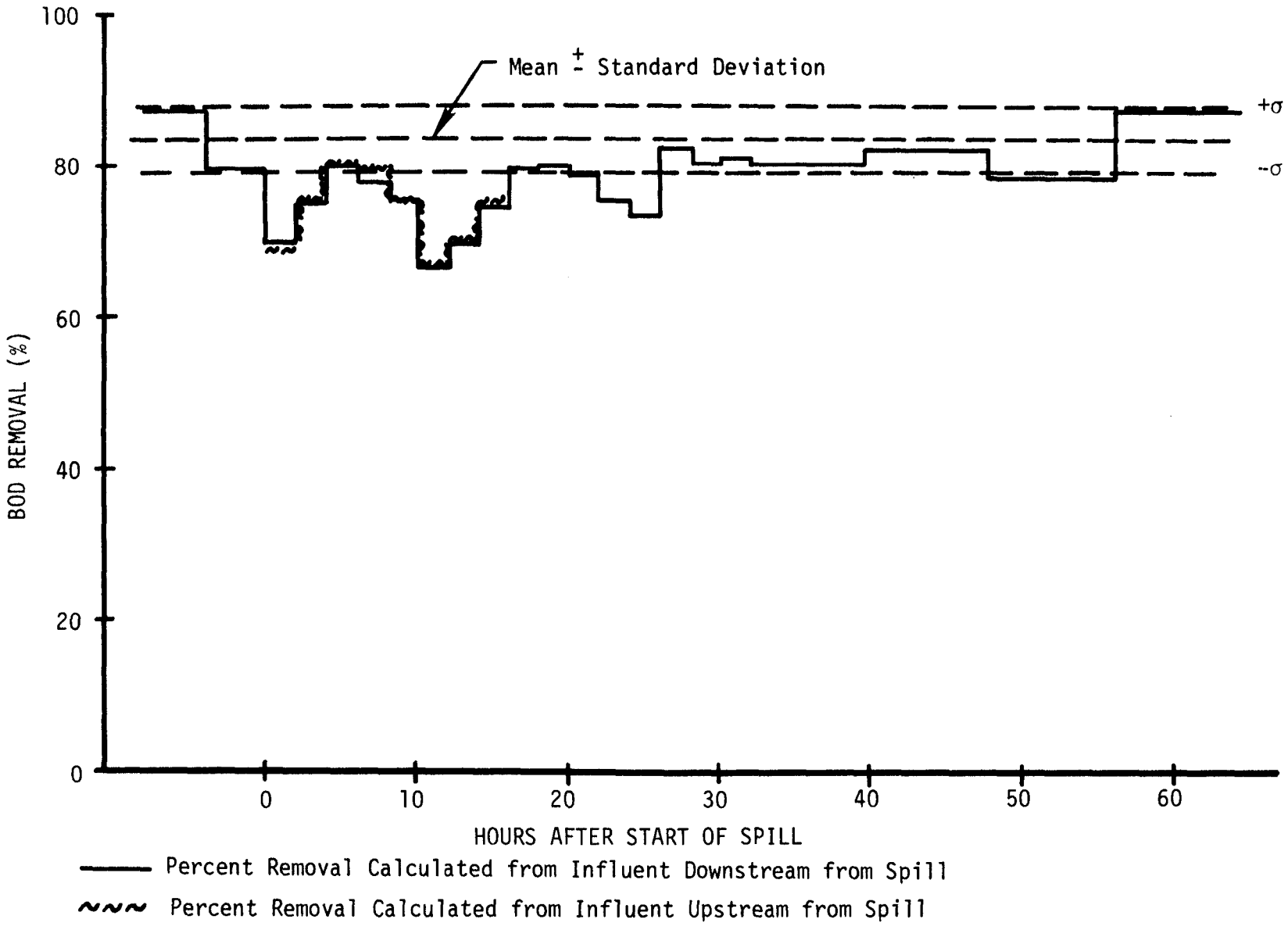

FIGURE F-4. BOD REMOVAL VS TIME
SPILL: UNNEUTRALIZED SCRUBBER WATER - 24 HOUR SPILL

Pilot Plant Study HMS* #9-1 August 21-23, 1974
H_2SO_4 Pickle Liquor, 1 Hour Spill

The effect of the H_2SO_4 Pickle Liquor spill on the removal efficiencies was very slight. The BOD removal efficiency curve shows the fairly unchanging trend (Figure F-5). The COD, suspended solids and turbidity removal efficiencies follow the same trend.

---

* HMS - Hazardous Materials Spill

TABLE F-5

BOD REMOVAL - H_2SO_4 PICKLE LIQUOR

HOURS AFTER START OF SPILL	INFLUENT BOD UPSTREAM FROM SPILL (mg/l)	INFLUENT BOD DOWNSTREAM FROM SPILL (mg/l)	EFFLUENT BOD (mg/l)
-2		113	19
-1.5		113	18
-1		97	14
-.5	93	89	14
SPILL 0.5	86	91	17
1	94	82	13
1.5	99	105	13
2		102	12
2.5		110	14
3		109	4
3.5		114	12
4		122	14
4.5		125	13
5		121	15
9+		111	17
13+		122	22
21*		111	16
29*		95	14
37*		133	23
43*		103	23
51*		86	16

+ 4 Hour Composite Samples Ending on the Hour Shown

* 8 Hour Composite Samples Ending on the Hour Shown

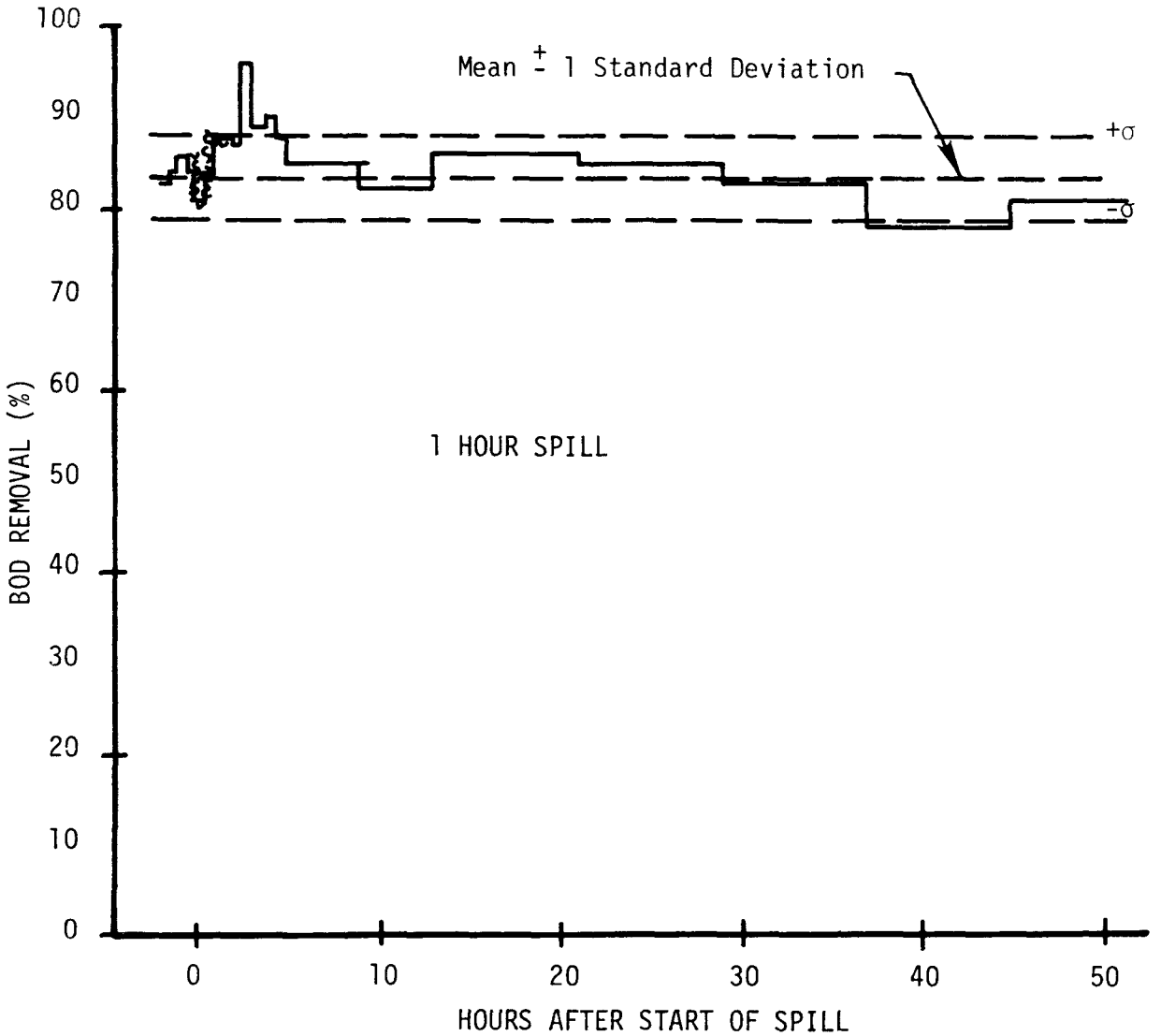

FIGURE F-5. BOD REMOVAL VS TIME
SPILL: H_2SO_4 PICKLE LIQUOR

Pilot Plant HMS* #10-1 August 18-20, 1974
No. 2, Fuel Oil, 1 Hour Spill

No. 2 fuel oil was spilled into the influent wastewater resulting in a fuel oil concentration of 8 milliliters per liter. There was a pronounced effect on all measured removal efficiencies. There was a complete loss of BOD removal efficiency one hour after the spill occurred (Figure F-6). Although the efficiency rose slightly for a short time twice, the system did not recover in the 51-hour period of the run. Suspended solids removal efficiencies followed the same trend as the BOD removals.

COD removal efficiency (Figure F-7) dropped from 89% to 0% two hours after the oil spill ended. The removals recovered to approximately 50% within 6 hours but did not completely recover during the duration of the run.

Turbidity removal efficiencies (Figure F-8) dropped to about one-half current values, 2-1/2 hours after the spill ended and remained at approximately 40% removal for 1-1/2 days, when the removal efficiency dropped significantly again showing a longer term effect.

---

* HMS - Hazardous Materials Spill

TABLE F-6

BOD AND COD REMOVAL - NO. 2, FUEL OIL

Study 10-1							
	HOURS AFTER START OF SPILL	INFLUENT BOD UPSTREAM FROM SPILL (mg/l)	INFLUENT BOD DOWNSTREAM FROM SPILL (mg/l)	EFFLUENT BOD (mg/l)	INFLUENT COD UPSTREAM FROM SPILL (mg/l)	INFLUENT COD DOWNSTREAM FROM SPILL (mg/l)	EFFLUENT COD (mg/l)
	-2		76	12		149	16
	-1.5		75	25		137	48
	-1		86	10		157	32
	-0.5	79	75	10	141	141	24
SPILL	0.5	80	525	9	137	6088	40
	1	99	735	45	189	3280	12
	1.5	78	120	60	145	145	32
	2	92	555	60	120	120	52
	2.5	76	75	150	133	133	112
	3	82	86	195	135	172	152
	3.5		82	240		152	189
	4		86	360		160	185
	4.5		90	240		160	201
	5		9	225		156	260
	9+		78	135		168	164
	13+		97	75		156	66
	21*		94	98		164	74
	29*		67	68		123	74
	37*		107	105		168	82
	43*		107	53		176	70
	51*		85	83		153	95

+ 4 Hour Composite Samples Ending on the Hour Shown
* 8 Hour Composite Samples Ending on the Hour Shown

TABLE F-6. (continued)

TURBIDITY REMOVAL - NO. 2, FUEL OIL

Study 10-1

HOURS AFTER START OF SPILL	INFLUENT TURBIDITY UPSTREAM FROM SPILL (Hellige)	INFLUENT TURBIDITY DOWNSTREAM FROM SPILL (Hellige)	EFFLUENT TURBIDITY (Hellige)
-2		68	9
-1.5		68	9
-1		65	9
-0.5	44	44	9
SPILL 0.5	36	-	9
1	36	-	9
1.5	44	-	17
2	44	56	14
2.5	56	44	27
3	44	44	23
3.5		54	34
4		44	21
4.5		44	21
5		44	21
9+		56	36
13+		56	34
21*		54	31
29*		54	34
37*		56	34
43*		54	54
51*		46	46

+ 4 Hour Composite Samples Ending on the Hour Shown
* 8 Hour Composite Samples Ending on the Hour Shown

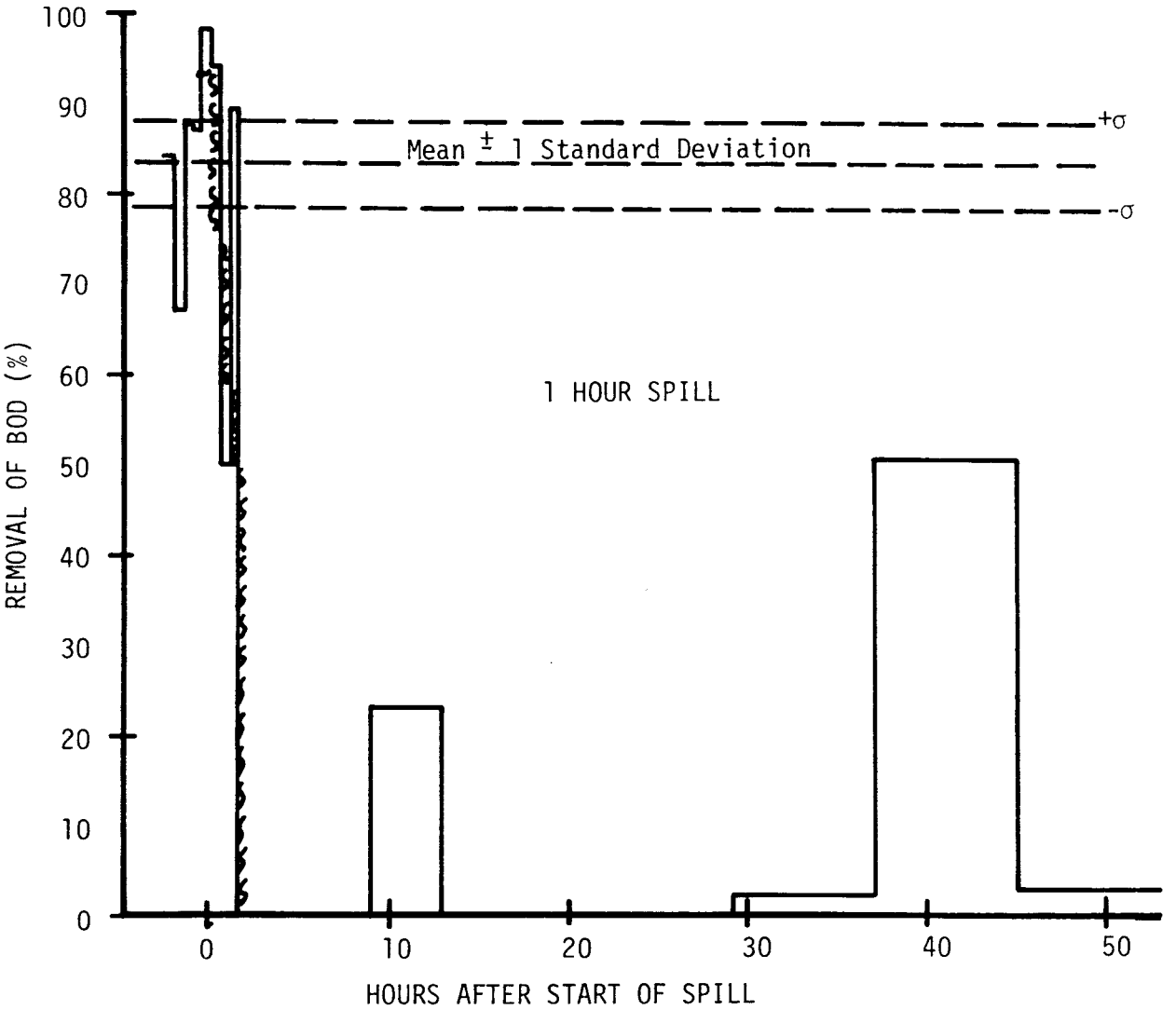

Percent Removal Calculated from Influent Downstream from Spill

Percent Removal Calculated from Influent Upstream from Spill

FIGURE F-6. BOD REMOVAL VS TIME
SPILL: NO. 2 FUEL OIL

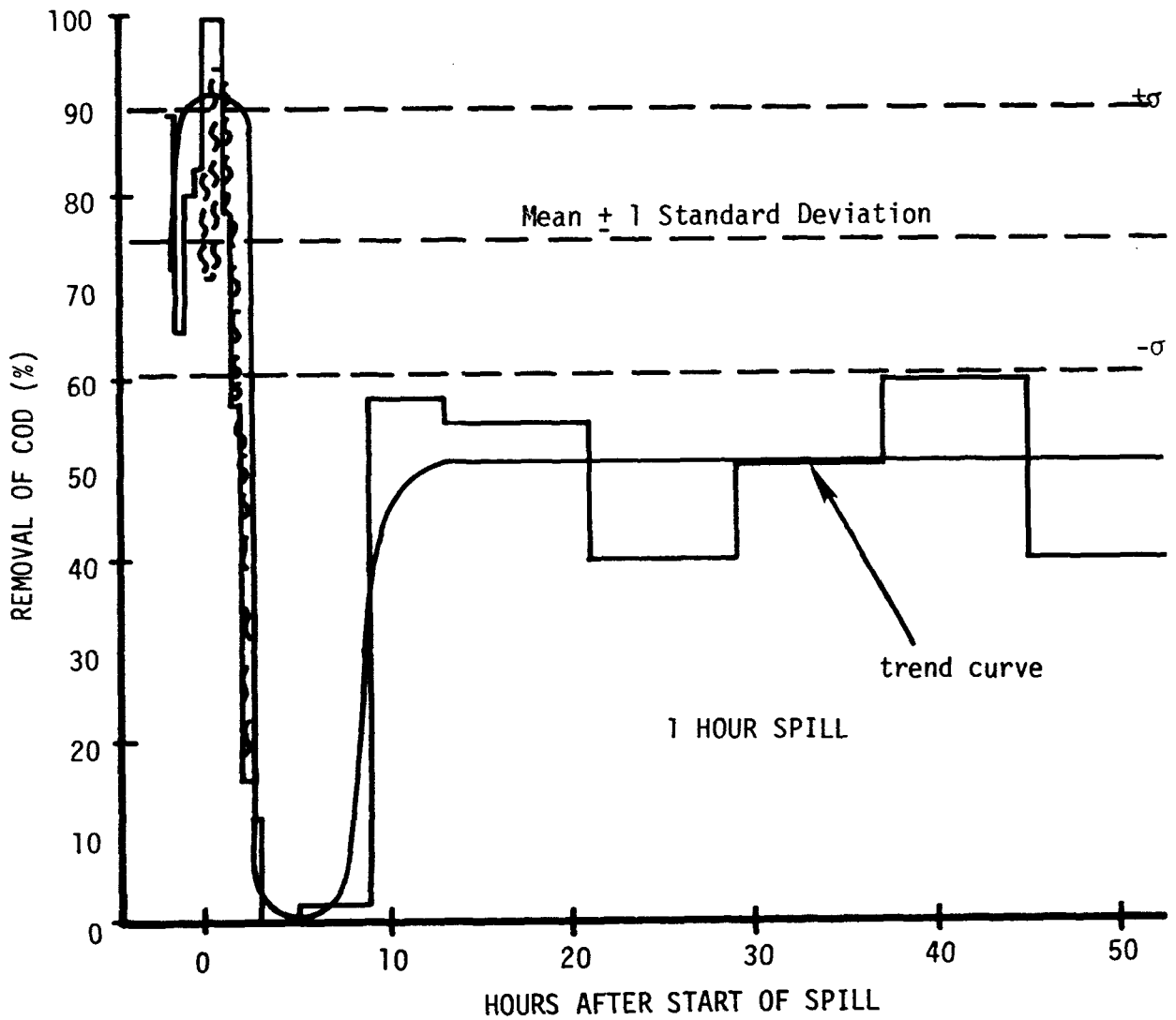

——— Percent Removal Calculated from Influent Downstream from Spill

~~~ Percent Removal Calculated from Influent Upstream from Spill

FIGURE F-7. COD REMOVAL VS TIME
SPILL: NO. 2 FUEL OIL
~~~

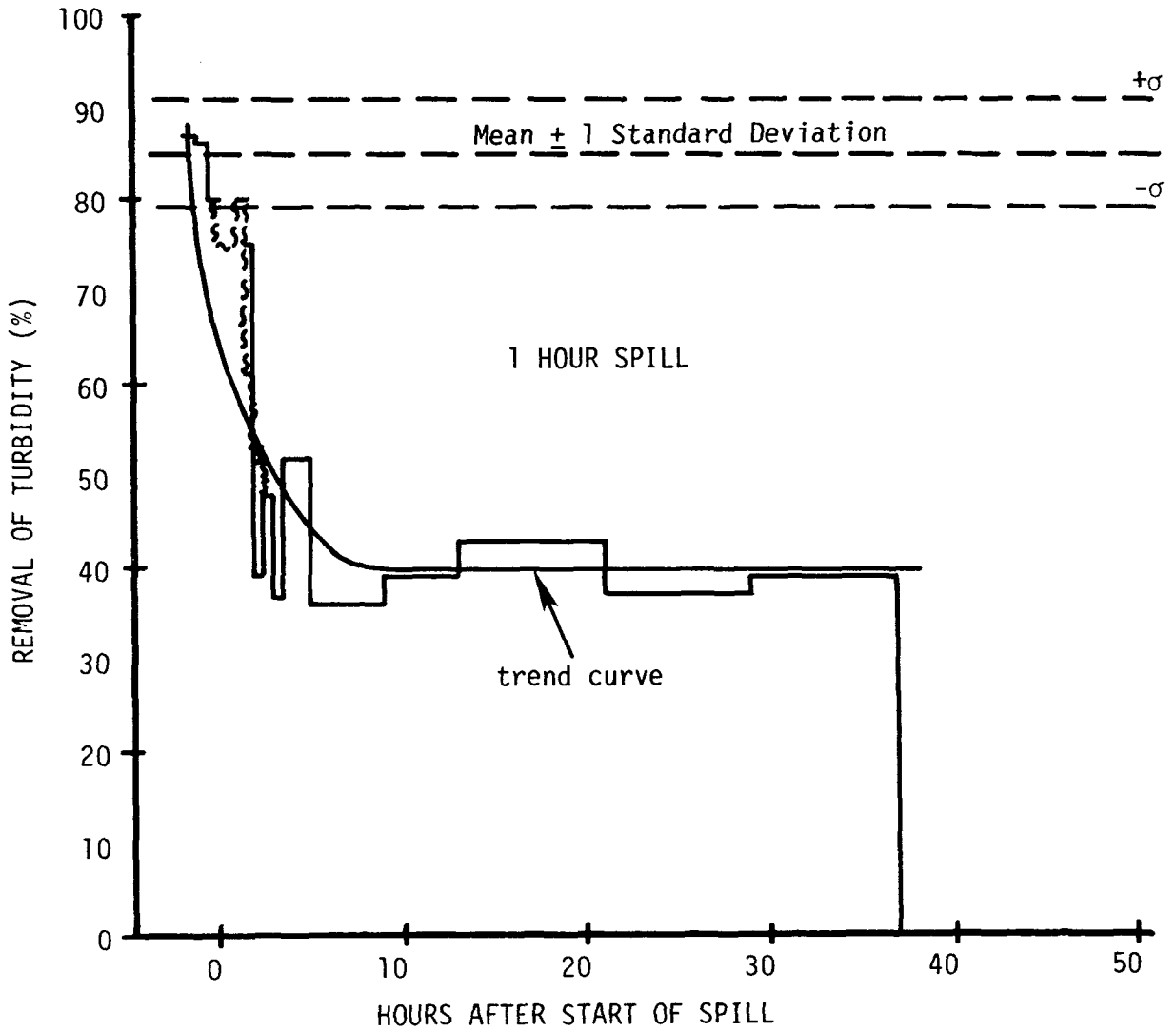

——— Percent Removal Calculated from Influent Downstream from Spill

~~~ Percent Removal Calculated from Influent Upstream from Spill

FIGURE F-8. TURBIDITY REMOVAL VS TIME
SPILL: NO. 2 FUEL OIL
~~~

Pilot Plant HMS* #11-1 October 2-4, 1974
Perchloroethylene, 1600 mg/l, 1 Hr. spill

Perchloroethylene had an effect on the removal efficiencies of the treatment system. BOD removals dropped from 66% to 14% during the spill but recovered to base line during the second day. COD and turbidity removal efficiencies were not affected at all. Suspended solids remained at base line until 24 hours after the spill occurred when it dropped significantly and then partially recovered during the next day (Figure F-9).

---

* HMS - Hazardous Materials Spill

TABLE F-7

SUSPENDED SOLIDS REMOVAL - PERCHLOROETHYLENE

HOURS AFTER START OF SPILL	INFLUENT SS UPSTREAM FROM SPILL (mg/l)	INFLUENT SS DOWNSTREAM FROM SPILL (mg/l)	EFFLUENT SS (mg/l)
-2		78	20
-1.5		56	17
-1		57	16
-0.5	45	52	15
SPILL 0.5	39	37	13
1	44	45	12
1.5	47	36	11
2		45	13
2.5		44	15
3		49	17
3.5		51	15
4		51	17
4.5		47	15
5		56	23
9+		60	22
13+		63	24
21*		61	27
29*		57	59
37*		84	63
43*		76	68
51*		70	41

+ 4 Hour Composite Samples Ending on the Hour Shown
* 8 Hour Composite Samples Ending on the Hour Shown

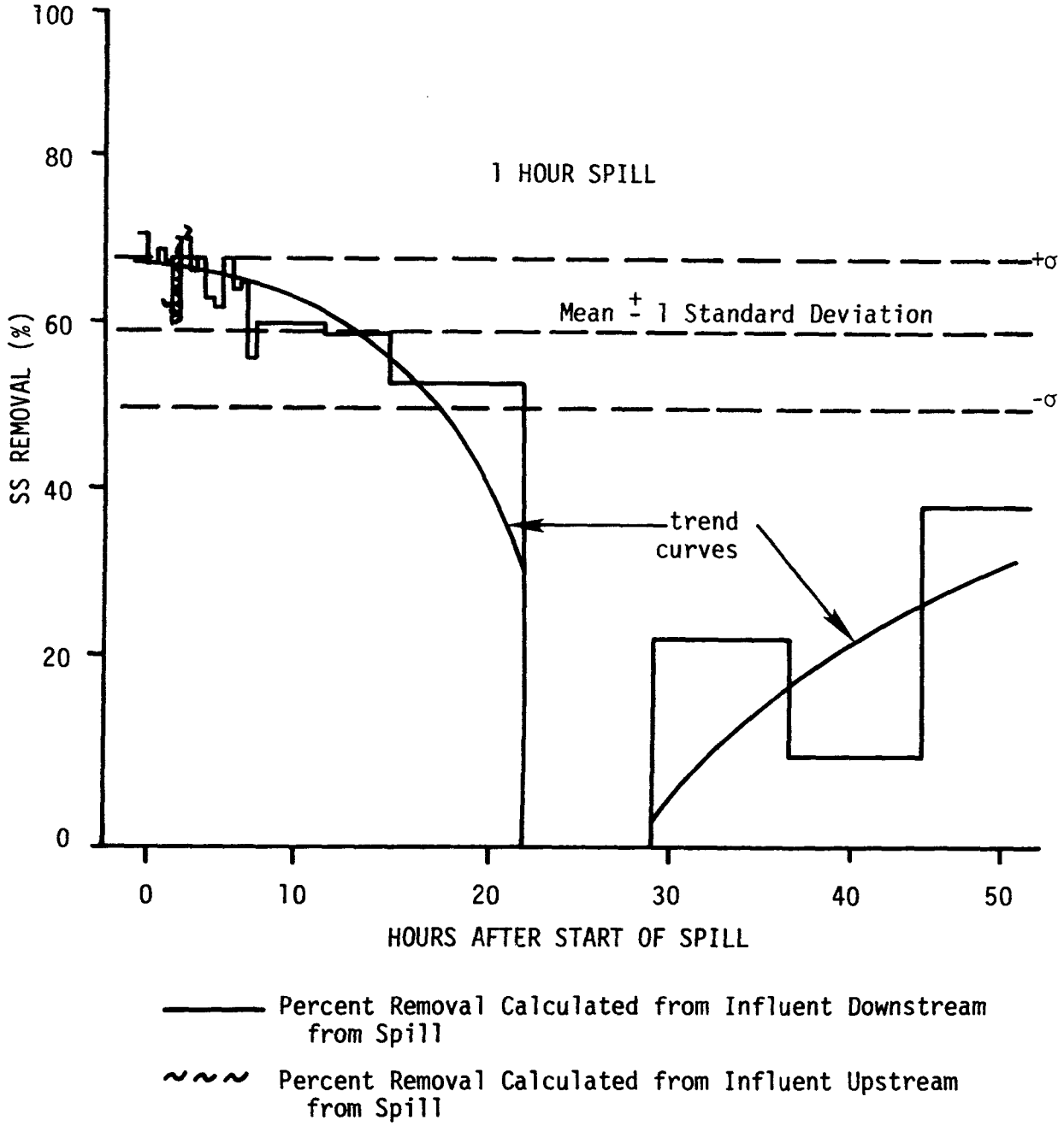

FIGURE F-9. SS REMOVAL VS TIME
SPILL: PERCHLOROETHYLENE

APPENDIX G. Description of Volume II

The ALCOSAN Survey Reporting System consists of 4 COBOL programs which produce a total of 16 reports.

The reports are grouped by type and degree of detailed information displayed. The first series presents general, i.e., page-one-of-the-survey,type data. The second series shows discharge data by industry while the third indicates quantities of hazardous materials stored by industry.

The fourth and fifth series summarize the discharge and hazardous materials data for all industries. Since the data is summarized, individual industries are not identified.

The system consists of an edit, update and two print programs. It has been run on an IBM 360/30 in a 134K byte partition. The system requires two tape drives, one 2314 disk, one printer and one card reader.

APPENDIX H

COMPLETION REPORT ON: MASS BALANCE STUDY
APRIL 15 AND 16, 1973

SECTION I. INTRODUCTION

ALCOSAN operating data indicate that the major fraction of heavy metal removal occurs in secondary treatment as modeled by the activated sludge Pilot Plant. To determine the pathway of hazardous materials (HM) through the treatment processes a mass balance study with the following objectives was necessary:

1. Determine where HM's exit the treatment plant.
2. Determine the residence times of hazardous materials.
3. Observe fluctuations in plant loading.
4. Validate sampling and analytical techniques.
5. Provide guidance in treatment plant design and future plant operation.

Observations of plant loading fluctuations would:

1. Indicate those sewage characteristics for which fluctuations could be expected.
2. Define the magnitude of the fluctuations.
3. Document effects resulting from the fluctuations.

Such data could be applied to monitoring and surveillance system design.

An extensive 48-hour mass balance study was designed which would satisfy the above objectives and could be performed by the ALCOSAN personnel. By conducting the study on a Sunday and Monday, maximum fluctuations in plant loading would likely be observed.

SECTION II. SAMPLING AND FLOW MEASUREMENT

Sampling sites were selected to permit a constituent balance to be constructed around all pertinent unit processes at ALCOSAN. A flow chart of the primary plant and pilot plant locating the sampling sites used during the 48-hour study is illustrated in Figure H-1. It should be noted that it was necessary to proceed upstream from the main pump station in each of the three interceptor systems to obtain samples of the raw influent sewage because of the return of several in-plant waste streams to the main pump station, wet well.

Treatment plant operating personnel collected all in-plant samples while outside maintenance personnel and industrial sampling personnel collected samples from and measured flow rates in the interceptors. Prior to conducting the study, personnel were informed of the study through a series of memorandums and meetings.

The following are a brief description of sampling methods and schedules:

1. To sample the three interceptor sewers entering the wet well, samples were withdrawn from the interceptors at the Verner, Shingiss, and Westhall downshafts. A two-liter capacity sampler, constructed of a plexiglass tube mounted in a protective cage, was designed for sample collection. Freely operating gates on the ends of the tube allowed the sampler to be lowered into the sewage flow in an open position. The gates were then closed and the sample brought to the surface without dilution by stagnant sewage in the downshaft. A pneumatic winch was used to lower and raise the sampler. At each site a one gallon sample was collected every two hours and composited for four hours.

2. At site 4, the main pump station, samples were collected from the sampling faucet on Pump 4, a continuously operating, variable speed sewage pump. Two types of samples were collected: one, hourly samples which were composited for eight hours and two, grab samples which were collected every two hours. Figure H-2 illustrates the arrangement of pumps at the wet well and locates the influents to the wet well.

3. At site 5, the aerated grit channel influent, samples were collected at the influent to each operating channel and combined samples were collected hourly and composited for four hours. Sampling was done with an open quart jar sampler on a rope.

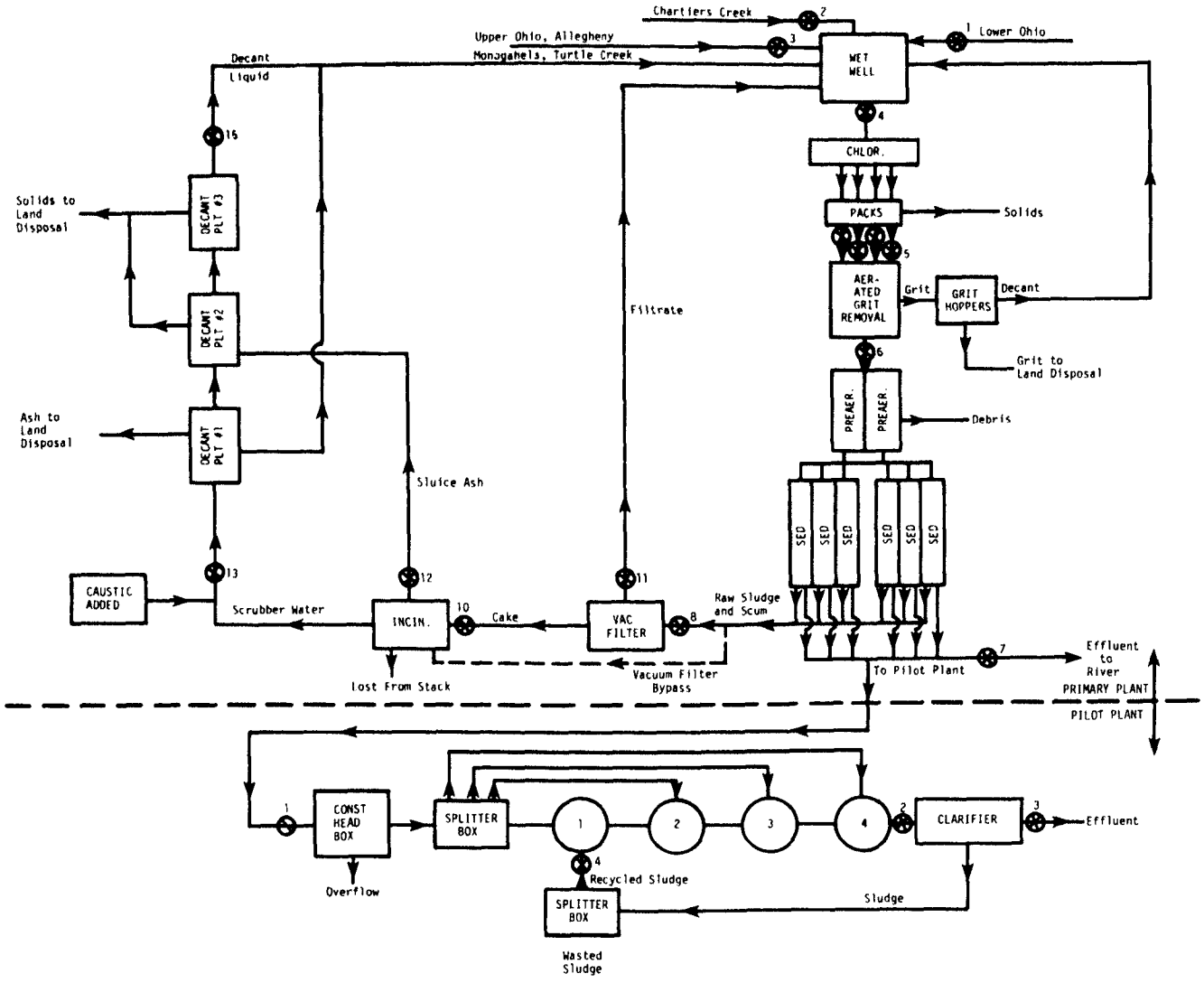

FIGURE H-1. FLOW CHART OF PRIMARY PLANT AND PILOT PLANT LOCATING THE SAMPLING SITES

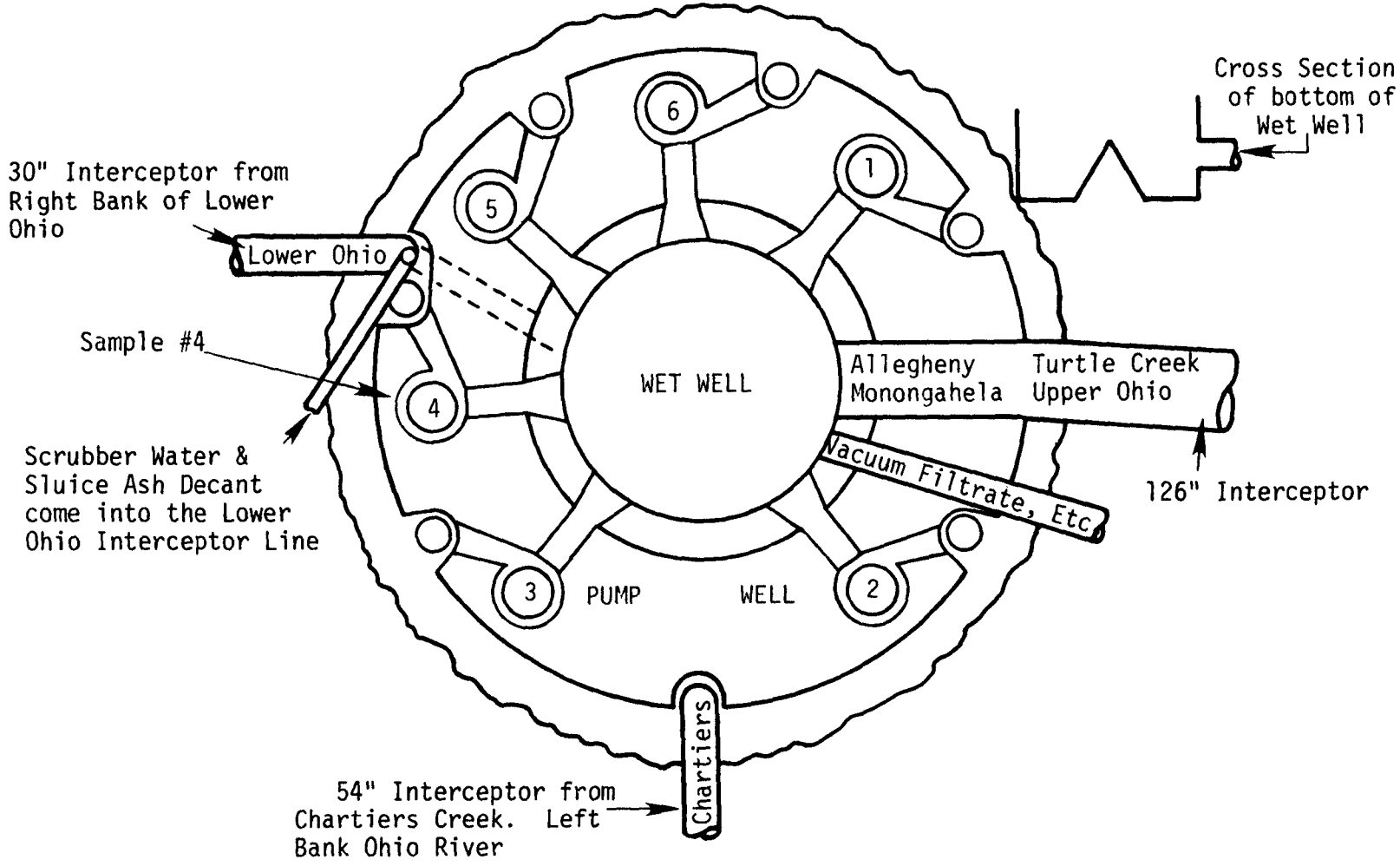

FIGURE H-2. MAIN PUMP STATION WET WELL SCHEMATIC
LOCATION OF INFLUENT INTERCEPTORS

4. At site 6, the preaeration tank influent, samples were collected at the influent to both the east and west tanks and combined. Samples were collected hourly and composited for four hours. Sampling was done with an open quart jar sampler on a rope.

5. At site 7, the primary effluent, samples were collected from the effluent channel. Two types of samples were collected: one, hourly samples which were composited for eight hours and two, grab samples which were collected every two hours. Sampling was with an open quart jar sampler on a rope.

6. At site 8, samples of the primary sludge were collected prior to chemical conditioning at the sampling faucet on each operating sludge pump in the vacuum filter building. Samples were collected every two hours and composited for four hours.

7. At site 10, vacuum filter cake samples were collected from all operating cake conveyor belts. Samples were collected every two hours and composited for four hours.

8. At site 11, vacuum filter filtrate samples were collected at the sampling faucets on each operating filtrate pump. Samples were collected every two hours and composited for four hours.

9. At site 12, scrubber water samples were collected at the ash distribution manhole preceeding the ash decant pits. Samples were collected every two hours and composited for four hours. Sampling was with an open quart jar sampler on a rope.

10. At site 13, incinerator sluice ash samples were collected at each furnace being sluiced at intervals during the approximately 20 minute sluicing operation. Samples were collected with a ladle-type sample. (Ash is removed from the incinerators by flushing the incinerator with effluent water in an operation termed sluicing. The ash slurry is designated as sluice ash).

11. At site 15, decant liquid samples were collected at the effluent from the third bank of decant pits. Samples were collected every two hours and composited for four hours. Sampling was with an open quart jar sampler on a rope.

12. At the pilot plant, site 1 was located where the primary effluent sewage enters Pass 2; site 2 at the clarifier influent; site 3 at the clarifier effluent, and site 4 where the return sludge enters Pass 1. Samples were collected hourly at all sites and composited for eight hours. Grab samples also were collected every two hours. Sampling was done with ladle-type samplers.

The final volume of all composite and grab samples was two gallons except for the filter cake samples which were one quart. All 8-hour composites were kept refrigerated during compositing. Wherever possible, the four hour composites also were kept refrigerated during compositing. Grab samples were taken immediately to the lab as were the composite samples at the end of their composition period.

Flow rates were determined in the following manners:

1. In the interceptor system, a General Oceanics Model 2030 flow meter was used to determine flow velocity. The flow rate in cfs was calculated by multiplying the cross-sectional area of the sewer by the flow velocity. In the Chartiers interceptor, a velocity meter could not be utilized; the flow was calculated from measurements made of the flow over a weir at the Ella Street pump station and through an orifice at the Chartiers junction chamber. At the Westhall structure the sewage normally entering the interceptor sewer at the downshaft was bypassed. The head on the influent and discharge ends of the by-pass was measured for calculation of this flow.

2. Influent sewage flow was calculated in the following manners:

   a. by measurement made in the three incoming interceptor sewers.

   b. by a chart recorder coupled to a Venturi meter located between the grit removal and preaeration processes.

   c. by a totalizing meter linked to the Venturi meter, but operating from a different electrical signal than the chart recorder.

   d. from pump capacity curves and the actual operating times of the six pumps at the main pump station.

3. Flow of primary sludge to the vacuum filters was calculated from counters recording sludge pump piston strokes and a pump capacity factor of 3.186 gallons per stroke.

4. Vacuum filter filtrate flow was determined by a mass balance of the filtration process.

5. Scrubber water flowrate was taken from flow meters on the scrubber system.

6. Flow of sluice ash from the incinerator to the ash decant pits was determined by three methods:

a. from the volume of water utilized during 9 sluicing operations conducted using the emergency flushing system modified to permit water use measurement.

b. by operating the decant pits on a batch rather than continuous basis and measuring the water level in the pit.

c. by a water balance around the ash pit predicated on the ash pit discharge flow measured at site 15.

7. Scales on the conveyor system transporting the cake to the incinerators were used to measure the quantity of filter cake.

8. The flow rate of the decant liquid returned to the wet well was calculated by determining the water level in the decant pits at regular intervals during the study and then applying the broad-crested weir flowrate equation for the flow of the decant liquid discharged through the sluice gates at the decant pits.

9. The influent and return sludge flow rates in the pilot plant were calculated by measuring the time required to collect a given volume of sewage or sludge.

10. Air flow to the pilot plant aeration tanks was metered with a Fisher-Porter Rato-site rotometer (Model 2235624).

SECTION III. ANALYTICAL DETERMINATIONS

During the study, laboratory personnel worked two twelve-hour shifts each day. The laboratory was staffed with four or five persons on each shift.

Samples were analyzed immediately for the following parameters:

1. pH
2. BOD
3. total solids
4. total volatile solids
5. suspended solids
6. volatile suspended solids
7. acidity/alkalinity

Samples were also preserved according to Standard Methods (Ref. 20) and Methods of Chemical Analysis (Ref. 24) for characterization of the following parameters at a later date:

1. COD
2. total phosphorus
3. total Kjeldahl nitrogen
4. grease
5. cyanide
6. phenol
7. total metals
8. dissolved metals

Metal concentrations were determined according to the Methods of Chemical Analysis (Ref. 24) and Analytical Methods for Atomic Absorption Spectrophotometry (Ref. 25) for the following:

1. aluminum
2. cadmium
3. chromium
4. copper
5. iron
6. lead
7. manganese
8. nickel
9. zinc
10. cobalt
11. arsenic
12. selenium
13. silver

All other analyses were according to Standard Methods (Ref. 20).

SECTION IV. RESULTS

On April 15 and 16, 1973, the mass balance study was performed. Sample collection proceeded on schedule with only minor problems and just two of the more than 300 samples were lost. Insufficient manpower in the laboratory resulted in some delay before samples were analyzed or preserved.

1. Influent Flow:

Table H-1 presents the influent flow record as determined by the four methods previously detailed. The totalizer and chart recorder operating from the Venturi meter indicated similar influent flows. Flows determined from the pump capacity curves and pump operating time were greater than flows measured by the Venturi meter. Wear on the pump impellors has likely reduced their pumping efficiency. The influent flow measured in the interceptor sewers was 50% less than the flow determined by the other three methods. The flow measured in the Chartiers Interceptor was approximately twice the interceptor design flow; the flow in the Upper Ohio Interceptor was approximately 12% of the design flow. The aforementioned design flows are presented in Table H-2. Table H-3 presents actual interceptor system flow data.

The considerable difference between the design flow and the actual flow measured in the Upper Ohio Interceptor may have been the result of conditions in the ten foot diameter interceptor which interferred with the operation of the velocity meter.

The influent flow measured by the Venturi meter and recorded by both the chart recorder and the totalizer are presented on Figures H-3a and H-3b. The results indicated that:

1. The minimum flow occurred from 5 a.m. to 7 a.m. on both Sunday and Monday. The quantity of flow was similar on both days.

2. The maximum flow occurred from noon to 2 p.m. on both days; however, the maximum flow on Monday was greater than on Sunday.

3. From 5 a.m. to noon the flow increased; however, on Monday the rate of increase was more rapid.

4. A relatively uniform flow, less than the maximum, occurred from 5 p.m. to 10 p.m. after which flow decreased until 5 a.m. The rate of decrease was similar on both days.

Text continues on page 211.

TABLE H-1

INFLUENT FLOW RECORD

TIME PERIOD From To	Sunday, April 15, 1973				Monday, April 16, 1973			
	Totalizer* Reading	Chart Reading	Pump Operation	Three Interceptors	Totalizer* Reading	Chart Reading	Pump Operation	Three Interceptors
12:01am- 1:00am	6.47	6.75	7.70	3.06	6.30	6.67	7.53	3.30
1:00am- 2:00am	5.90	6.46	7.70	3.03	5.89	6.38	6.76	3.20
2:00am- 3:00am	5.81	6.04	6.22	3.00	5.72	5.67	6.91	2.98
3:00am- 4:00am	5.70	5.83	6.27	2.90	5.52	5.58	6.77	2.78
4:00am- 5:00am	5.50	5.54	5.97	2.84	5.48	5.58	6.25	2.65
5:00am- 6:00am	5.36	5.46	5.62	2.81	5.04	5.42	6.25	2.58
6:00am- 7:00am	5.33	5.42	5.45	2.94	6.31	5.54	6.42	2.73
7:00am- 8:00am	5.61	5.50	5.79	3.08	5.90	6.17	7.69	2.89
8:00am- 9:00am	6.02	5.83	6.41	3.14	7.15	7.08	9.29	3.10
9:00am-10:00am	6.57	6.25	6.89	3.23	7.89	7.71	8.32	3.25
10:00am-11:00am	6.82	6.88	8.52	3.33	7.88	8.21	8.88	3.37
11:00am-12:00pm	6.48	7.17	8.32	3.43	7.89	8.29	9.06	3.49
12:00pm- 1:00pm	7.10	7.29	8.32	3.55	7.66	8.33	9.15	3.60
1:00pm- 2:00pm	7.71	7.12	8.32	3.58	8.26	8.17	9.15	3.69
2:00pm- 3:00pm	6.47	7.21	8.60	3.49	7.87	8.04	9.06	3.68
3:00pm- 4:00pm	6.92	7.17	8.48	3.44	7.55	7.92	9.06	3.67
4.00pm- 5:00pm	6.90	7.04	8.32	3.41	7.23	7.75	8.80	3.68
5:00pm- 6:00pm	6.88	7.00	8.02	3.41	7.40	7.62	8.80	3.68
6:00pm- 7:00pm	6.87	7.08	8.02	3.44	7.32	7.58	8.32	3.62
7:00pm- 8:00pm	6.96	7.12	8.32	3.46	7.30	7.54	8.60	3.63
8:00pm- 9:00pm	6.89	7.04	8.02	3.48	7.07	7.54	8.48	3.62
9:00pm-10:00pm	6.85	7.08	8.16	3.46	7.05	7.42	8.60	3.63
10:00pm-11:00pm	6.48	7.00	7.88	3.41	7.01	7.25	8.02	3.63
11:00pm-12:00am	6.86	6.96	8.02	3.35	6.67	7.08	8.18	3.63
TOTAL	154.46	158.34	179.34	78.27	165.40	170.54	194.35	80.08
AVERAGE	6.44	6.59	7.47	3.26	6.89	7.11	8.10	3.34

*Millions of gallons

TABLE H-2

SUMMARY OF SEWAGE QUANTITIES FOR INTERCEPTING SEWER
(Gallons Per Day)

Drainage Basin Monongahela & Upper Ohio	Accumulated Year 1950 D. W. Av. Low Basis	Accumulated Year 1950 D. W. Av. High Basis	Accumulated Year 2000 D. W. Av. Low Basis	Accumulated Year 2000 D. W. Av. High Basis	Ratio, Storm Peak to Year 2000 D.W. Av. High Basis	Peak Storm Flow Year 2000
Turtle Creek to 11th St., Braddock	9,494,900	11,449,800	13,981,000	20,710,000	250%	51,775,000
Braddock & N. Braddock	11,280,100	13,617,800	16,269,800	23,960,000	240%	57,504,000
Rankin & Swissvale						
Whitaker Run	13,433,000	16,258,700	19,019,200	27,415,000	230%	63,055,000
Nine Mile Run	18,153,700	22,070,500	25,354,800	35,435,000	225%	79,729,000
Homestead to Four Mile						
Four Mile Run	30,282,300	36,965,100	41,199,700	55,960,000	193%	108,003,000
Pgh. 25-26	34,547,000	42,086,100	45,798,200	62,320,000	190%	118,408,000
Pgh. 12-13	38,428,300	46,761,100	50,032,700	67,895,000	186%	126,285,000
Pgh. 27-30	38,856,100	47,282,100	50,579,100	68,595,000	185%	126,900,000
Pgh. 10-11	44,762,600	54,294,100	56,846,800	76,695,000	175%	134,216,000
Allegheny Left Bank	78,541,800	94,927,100	99,349,900	132,365,000	173%	228,991,000
Allegheny Right Bank	91,614,300	110,706,100	115,234,700	152,935,000	169%	258,460,000
Saw Mill Run	103,656,000	125,644,300	129,365,400	171,275,000	166%	284,316,000
Pgh. 19	106,794,600	129,420,300	132,633,100	175,575,000	167%	293,210,000
Pgh. 20-21	108,335,900	131,256,300	134,282,600	177,645,000	166%	294,891,000
Pgh. 22-23	110,248,400	133,592,300	136,389,300	180,365,000	166%	299,406,000
Lower Ohio	2,714,400	3,362,900	5,953,000	8,235,000	220%	18,117,000
Chartiers Creek	10,623,900	12,988,100	16,384,800	22,035,000	194%	42,827,000
TOTAL INTO PLANT	123,586,700	149,943,300	158,727,100	210,635,000	162%	340,807,000 *

Note: Low Basis means based on annual water sales, infiltration at 19,100 gal. per mile per day, and probable population.

High Basis means based on high quarter water sales, infiltration at 25,000 gal. per mile per day, and interceptor design population.

* This figure is reduced from the total of the Upper Ohio, Lower Ohio and Chartiers Creek peaks because the peaks from these three intercepting sewers do not reach the wet well simultaneously.

TABLE H-3

INTERCEPTOR SYSTEM FLOW DATA
(in millions of gallons per day - MGD)

Date	Lower Ohio Interceptor	Chartiers Creek Interceptor		Upper Ohio Interceptor At Westhall St.		Total
		Inter.	By-Pass	Junction Chamber	Pump Station	
4/15/73	5.36	14.38	3.22	55.10	0.24	78.30
4/16/73	7.24	15.14	2.62	54.67	0.42	80.09

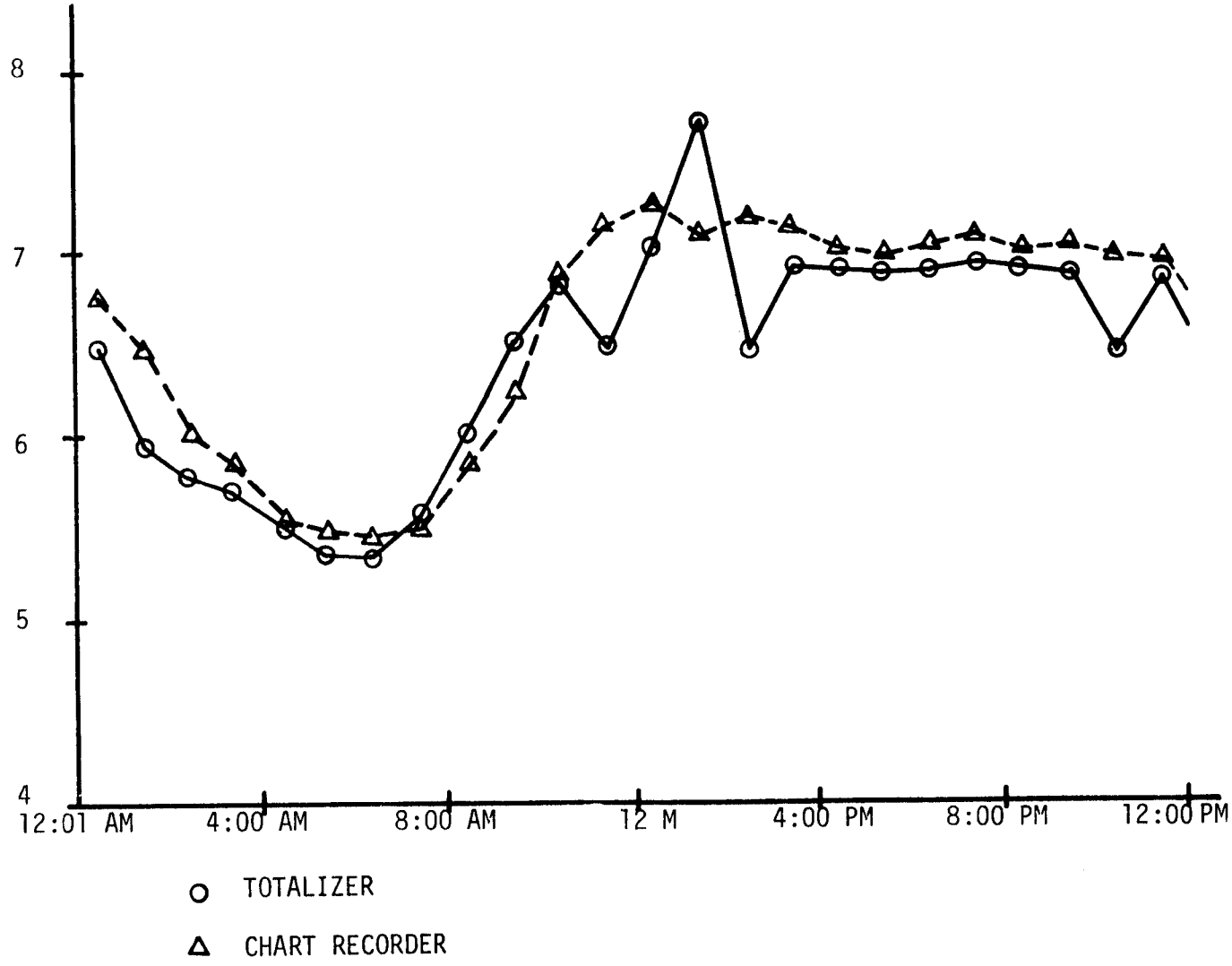

FIGURE H-3a. INTERCEPTOR FLOW, SUNDAY, APRIL 15, 1973

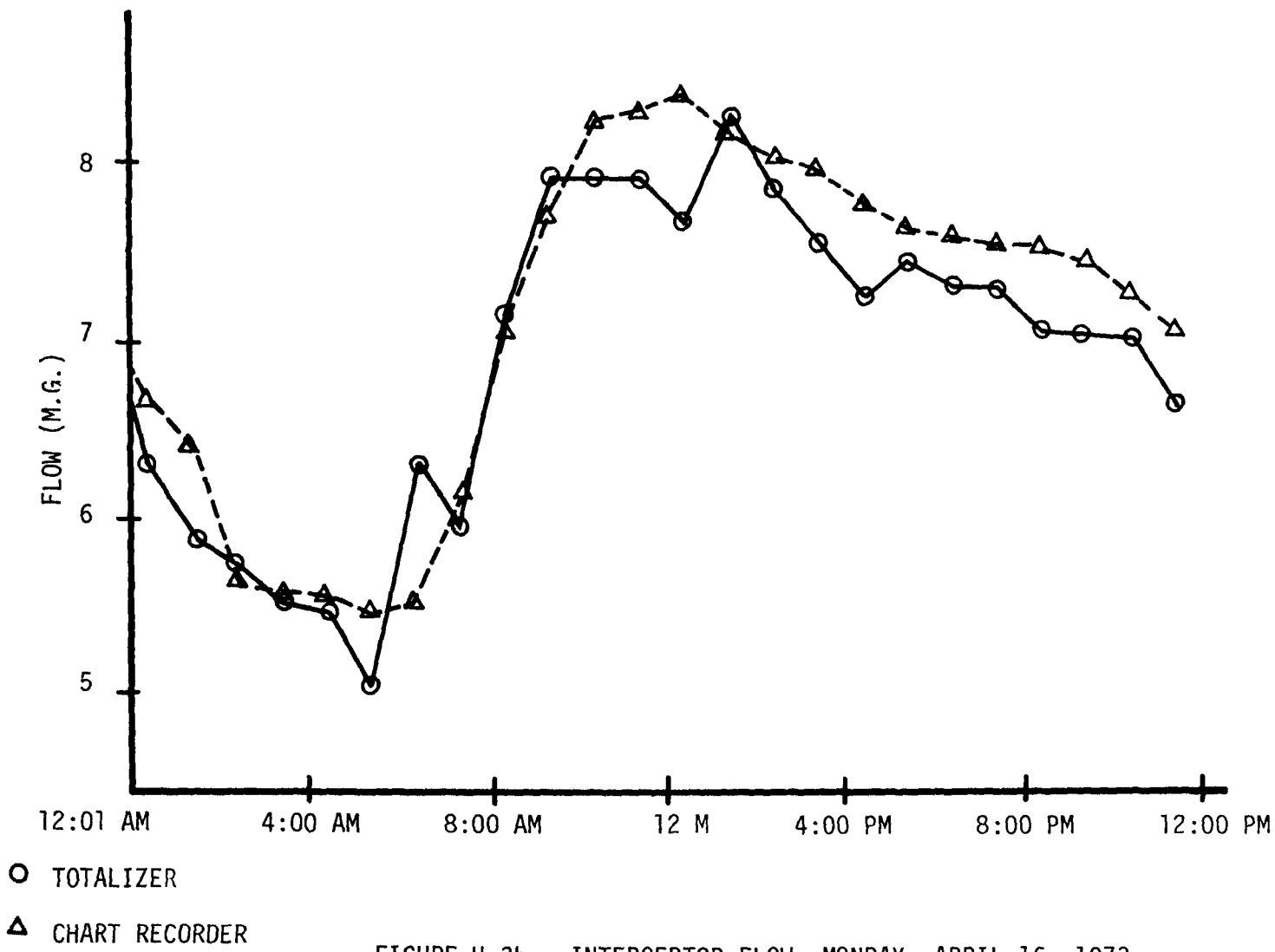

FIGURE H-3b. INTERCEPTOR FLOW, MONDAY, APRIL 16, 1973

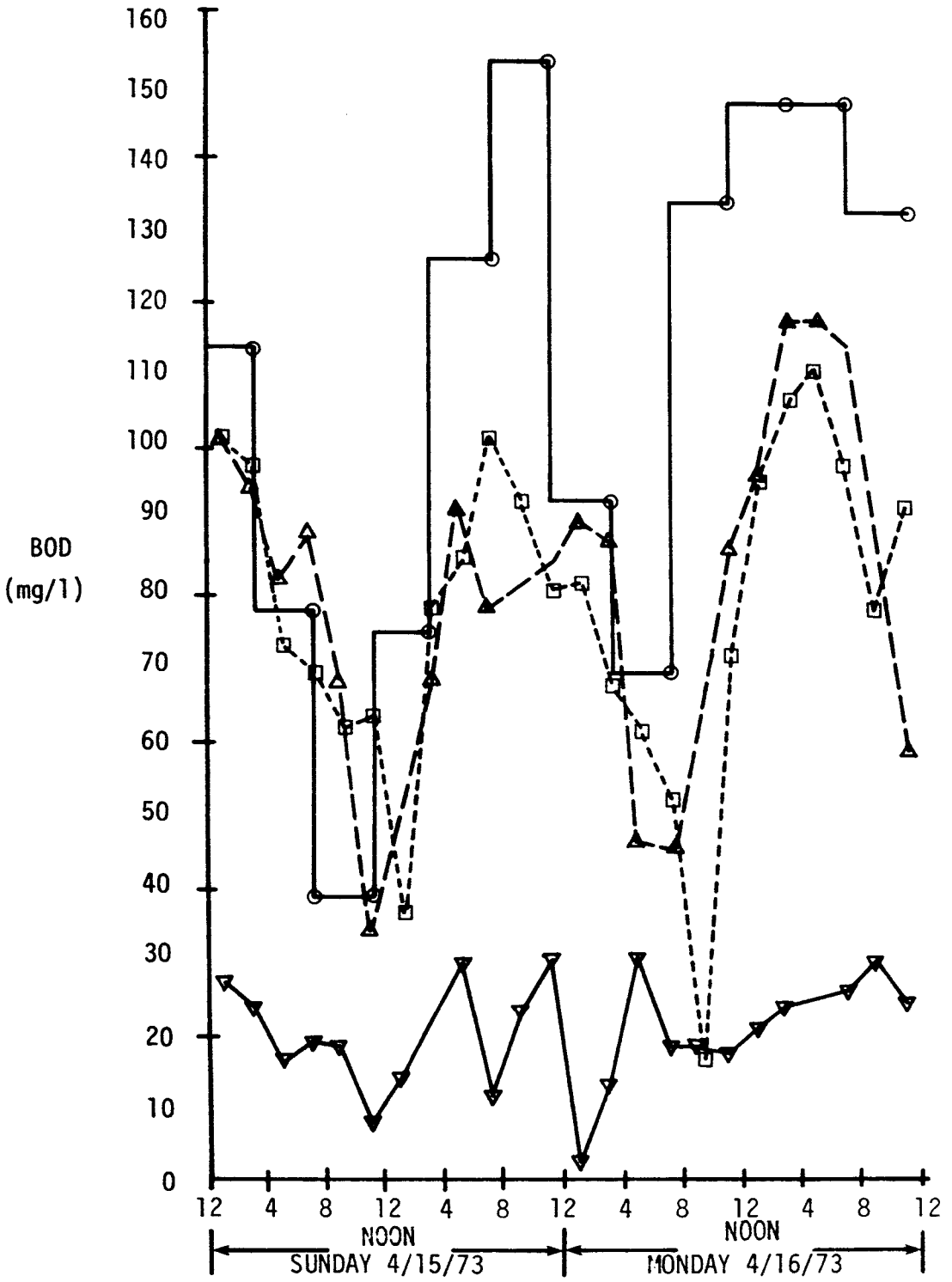

○ Preaeration Tank Influent (4 Hour Composite) (Site 6)
△ Primary Effluent (grab samples)
□ Pilot Plant Influent (grab samples)
▽ Pilot Plant Effluent (grab samples)

FIGURE H-4. INFLUENT AND EFFLUENT BOD_5

5. Flow variations were greater on Monday than on Sunday. On Sunday the flow ranged from 5.3 to 7.7 mg/hr; while on Monday the flow ranged from 5.0 to 8.3 mg/hr.

2. Flows of In-Plant Streams:

At sites 5, 6, and 7, the wastewater flows could not be readily determined and were assumed to be equal to the influent wastewater flow as measured by the Venturi meter. An average of the chart recorder and totalizer flow was used to calculate materials balances at sites 4, 5, 6, and 7.

In Table H-4 the material flows at sites 8, 10, 11, 12, 13 and 15 are summarized. Over the duration of this program, the combined flow of the in-plant streams returned to the main pump station wet well was less than 0.5% of the total influent flow.

3. Biochemical Oxygen Demand:

Figure H-4 illustrates the fluctuations in the influent and effluent BOD concentrations. The influent BOD appears to follow a diurnal pattern. Although the primary effluent BOD concentration paralleled influent BOD fluctuations, pilot plant effluent BOD did not.

4. pH

Figure H-5 illustrates the pH variations during the study. The widest variation is between 6.5 and 7.5.

TABLE H-4

IN-PLANT STREAM FLOWS

DATE	TIME FROM	TIME TO	Site 8 Primary Sludge (Gal.)	Site 10 Vacuum Filter Cake (Tons)	Site 11 Vacuum Filter Filtrate (Gal.)	Site 12 Scrubber Water (Gal.)	Site 13 Sluice Ash (Gal.)	Site 15 Ash Pit Decant Liquid (Gal.)
4/15/73 Sunday	12:01 am	1:00 am	45,490	8.13	67,326	25,200		18,000
	1:00	2:00				"		
	2:00	3:00	29,375	15.44		"	7,700	80,520
	3:00	4:00				"		
	4:00	5:00	27,263	15.41		"	7,700	80,520
	5:00	6:00				"		
	6:00	7:00	23,235	13.92	42,349	"		36,000
	7:00	8:00				"	7,700	
	8:00	9:00	27,610	12.84		"		40,080
	9:00	10:00				"	7,700	
	10:00	11:00	26,660	13.69	47,304	"		40,080
	11:00 am	12 m		6.33		"		
	12 m	1:00	26,262	6.19		"		40,080
	1:00	2:00				"	7,700	
	2:00	3:00	17,803	12.37	37,614	"		37,920
	3:00	4:00				"		
	4:00	5:00	31,175	12.78		"	7,700	46,920
	5:00	6:00				"		
	6:00	7:00	27,142	12.99	51,184	"		40,080
	7:00	8:00				"	7,700	
	8:00	9:00	29,318	13.77		"		40,080
	9:00	10:00				"	7,700	
	10:00	11:00	29,206	12.38	51,636	"		40,080
	11:00 pm	12:00 pm	11,587	5.95		"		
	Total:							
	12:01 am	12:00 pm	352,126	162.19	297,413[1]	604,800	61,600	540,360[1]

[1] Total flow for period 11:00 pm on 4/15/73 to 11:00 pm on 4/16/73.

TABLE H-4. (continued)

DATE	TIME FROM	TIME TO	Site 8 Primary Sludge (Gal.)	Site 10 Vacuum Filter Cake (Tons)	Site 11 Vacuum Filter Filtrate (Gal.)	Site 12 Scrubber Water (Gal.)	Site 13 Sluice Ash (Gal.)	Site 15 Ash Pit Decant Liquid (Gal.)
4/16/73 Monday	12:01 am	1:00 am	11,645	5.44		25,200	7,700	36,000
	1:00	2:00				"		
	2:00	3:00	27,416	10.05		"	7,700	40,080
	3:00	4:00				"		
	4:00	5:00	24,924	10.14		"		36,000
	5:00	6:00				"	7,700	
	6:00	7:00	26,829	10.52		"		36,000
	7:00	8:00			90,328	"		
	8:00	9:00	12,190	10.59		"	7,700	
	9:00	10:00				"		
	10:00	11:00	23,337	9.20		"	7,700	85,200
	11:00 am	12 m		5.22		25,500		
	12 m	1:00 pm		4.62		"	7,700	40,080
	1:00	2:00				"		
	2:00	3:00	43,989	9.88	69,576	25,800		37,920
	3:00	4:00				25,200	7,700	
	4:00	5:00	20,973	10.71		"		37,920
	5:00	6:00				"		
	6:00	7:00	22,576	9.83		"	7,700	37,920
	7:00	8:00				"		
	8:00	9:00	20,881	9.33		"		36,000
	9:00	10:00				"	7,700	
	10:00 pm	11:00 pm	20,212	8.54	75,168	"		37,920
	Total:							
	12:01 am	11:00 pm	254,972	114.07	235,072[1]	581,100	69,300	461,040[1]

[1] Total flow for period 11:00 pm on 4/15/73 to 11:00 pm on 4/16/73.

The fluctuation in primary influent and effluent and Pilot Plant influent and effluent BOD are summarized in the following Table.

	4/15/73	4/16/73
Influent BOD[2](mg/l)-Average Range	97 (96) 39-153 (45-132)	120 (155) 69-147 (72-316)
Primary Effluent BOD(mg/l)-Avg.[3] (Site 7) Range	83 34 to 126	85 45 to 117
Pilot Plant Influent BOD(mg/l)-Avg.[3] (Site PP1) Range	76 36 to 102	78 16 to 111
Pilot Plant Effluent BOD(mg/l)-Avg.[3] (Site PP3) Range	20 8 to 30	20 2 to 30
BOD Reduction (%) Primary Treatment Pilot Plant Overall	 14.4 (13.5) 73.7 79.4 (72.2)	 29.2 (45.2) 74.3 83.3 (87.1)

4. pH:

The fluctuations in primary influent and effluent and Pilot Plant influent and effluent pH are summarized in the following Table. Fluctuations in influent pH's are presented graphically in Figure H-5.

	4/15/73	4/16/73
Primary Influent pH-Average[1] (Site 5) Range	7.2 7.0 to 7.3	7.0 6.9 to 7.3
Primary Effluent pH-Average[1] (Site 7) Range	7.2 7.0 to 7.4	7.1 6.8 to 8.0
Pilot Plant influent pH-Average[1] (Site PP1) Range	7.2 7.0 to 7.4	7.0 6.5 to 7.2
Pilot Plant effluent pH-Average[1] (Site PP3) Range	7.3 7.2 to 7.5	7.1 6.8 to 7.3

Although greater pH loading fluctuations were experienced on Monday, April 15, 1973, pH remained in the neutral range. There was no apparent pattern to pH fluctuations.

[2] To correspond with normal sampling procedures, Site 6 was designated as the influent; however, Site 5 data are given in parentheses.
[3] Average calculated from grab samples.
[1] Average calculated from grab samples.

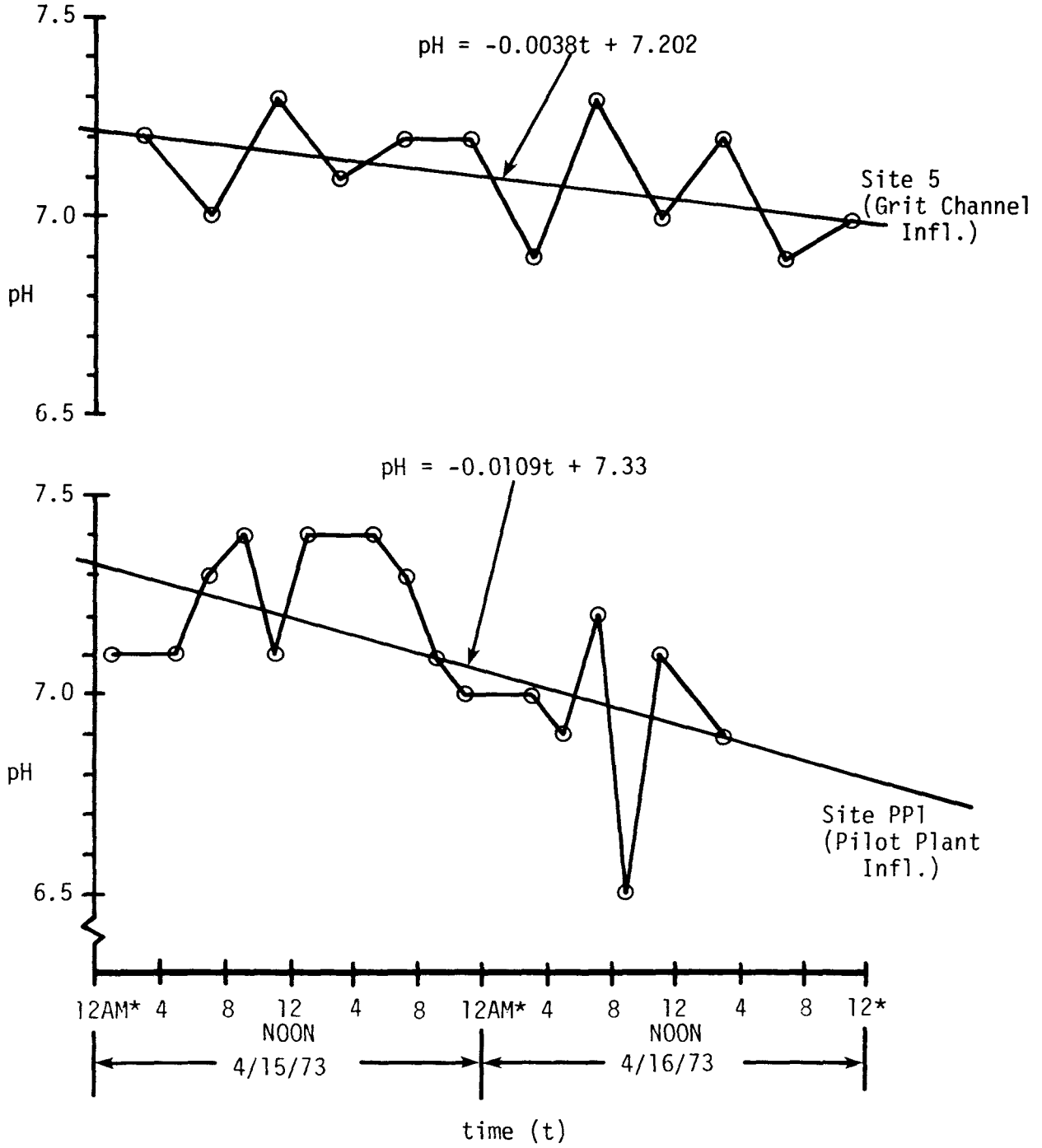

*Midnight

FIGURE H-5. pH VS TIME - SITES 5 AND PP1 (MASS BALANCE STUDY)

5. Suspended Solids:

The following table presents a summary of suspended solids (SS) loading and removal in the primary treatment plant and the pilot plant.

	4/15/73	4/16/73
Influent[1] SS(mg/l)-Average[2]	93 (106)	149 (151)
Range	58-122 (50-224)	92-210 (92-210)
Primary effluent SS(mg/l)-Aver.[2] (Site 7)	37	59
Range	12 to 60	22 to 94
Pilot Plant influent SS(mg/l)-Aver.[2] (Site PP1)	48	72
Range	16 to 100	36 to 132
Pilot Plant effluent SS(mg/l)-Aver.[2] (Site PP3)	17	23
Range	16 to 26	6 to 44
Suspended Solids Reduction (%)		
Primary Treatment	60.2 (65.1)	60.4 (60.9)
	64.6	68.1
	81.7 (84.0)	84.6 (84.8)

Although the average influent concentration of SS was greater on Monday, April 16, 1973, removal percentages were similar on both days of the study.

6. Solids Balance:

A solids balance over all unit treatment processes is summarized in Figure H-6. (Figure H-7 for the Pilot Plant). Also presented in this Table are the flows at all sampling sites during the 48 hours of this study. From this balance the following should be noted:

a. Approximately 1.4% of the total solids and 4.3% of the suspended solids at Site 5, the grit channel influent, resulted from the recirculation of in-plant streams (vacuum filter filtrate and ash pit decant liquid) to the main pump station wet well.

b. Primary sludge production was approximately 1900 gal. per million gallons of influent wastewater or 700 lb. of dry total solids per million gallons.

---

[1] To correspond with normal sampling procedures, Site 6 was designated as the influent; however, Site 5 data are given in parenthesis.

[2] Average calculated from grab samples.

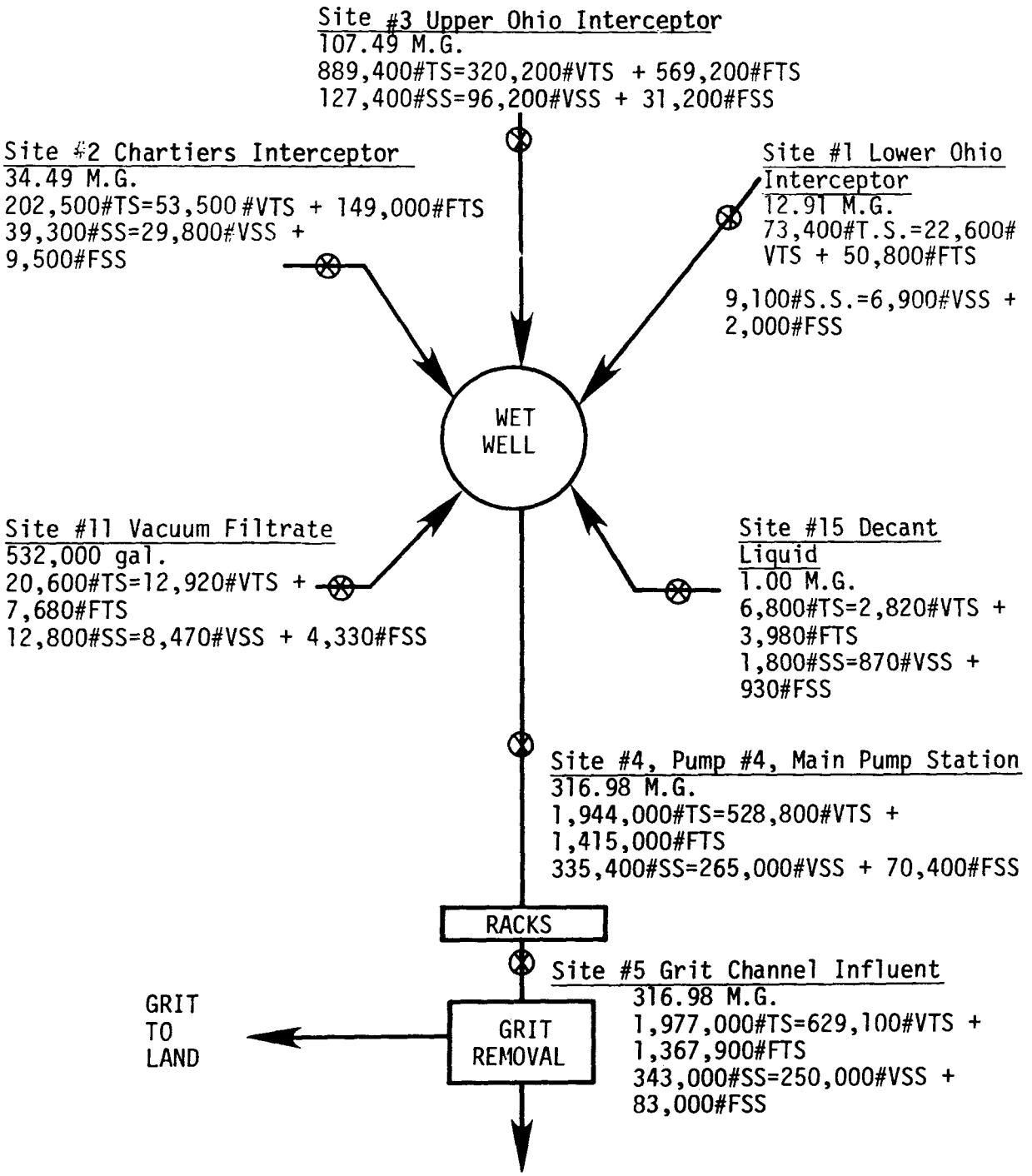

FIGURE H-6. SOLIDS BALANCE - PRIMARY PLANT
(12:01 A.M. 4/15/73 to 11 P.M. 4/16/73)

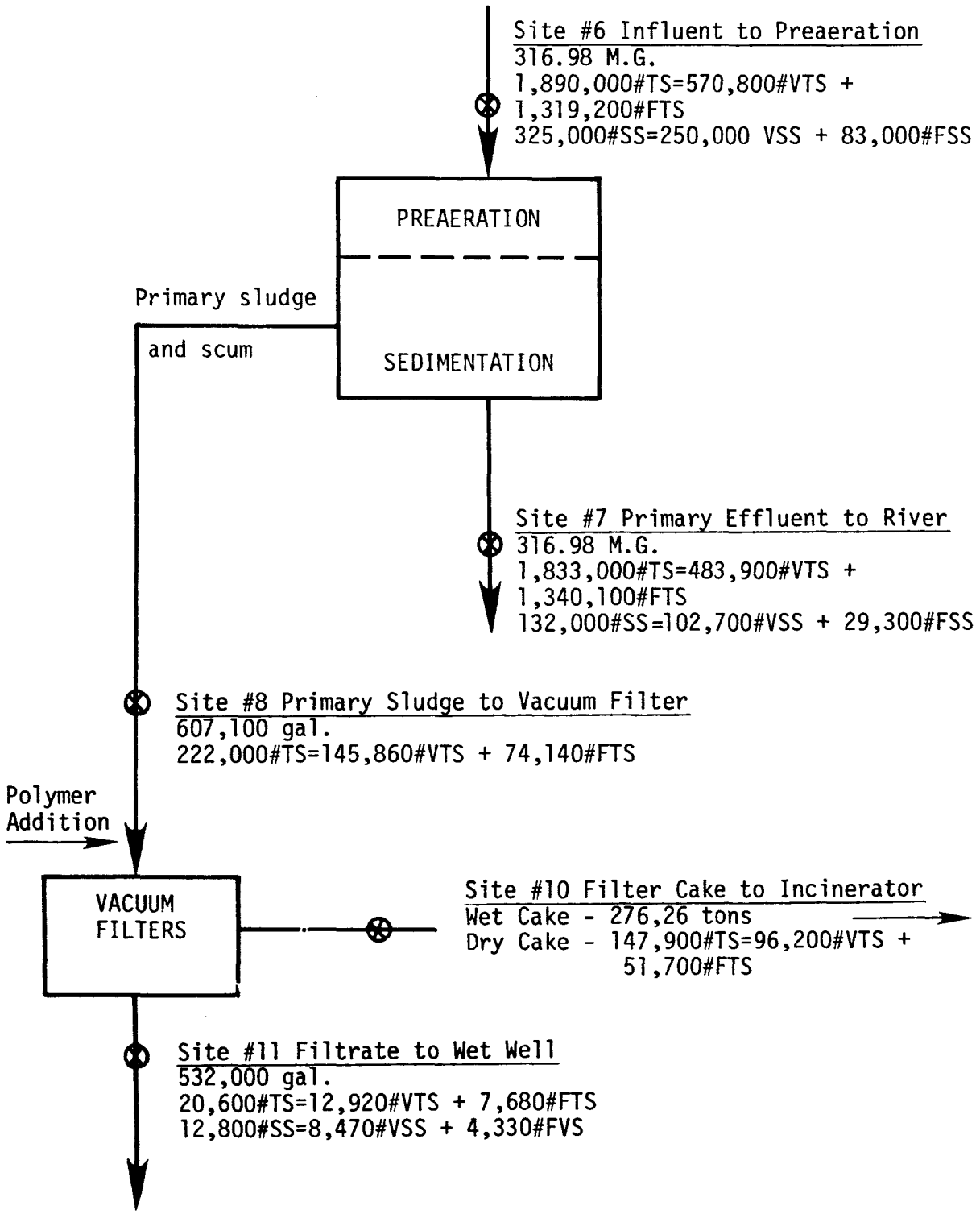

FIGURE H-6. (continued)

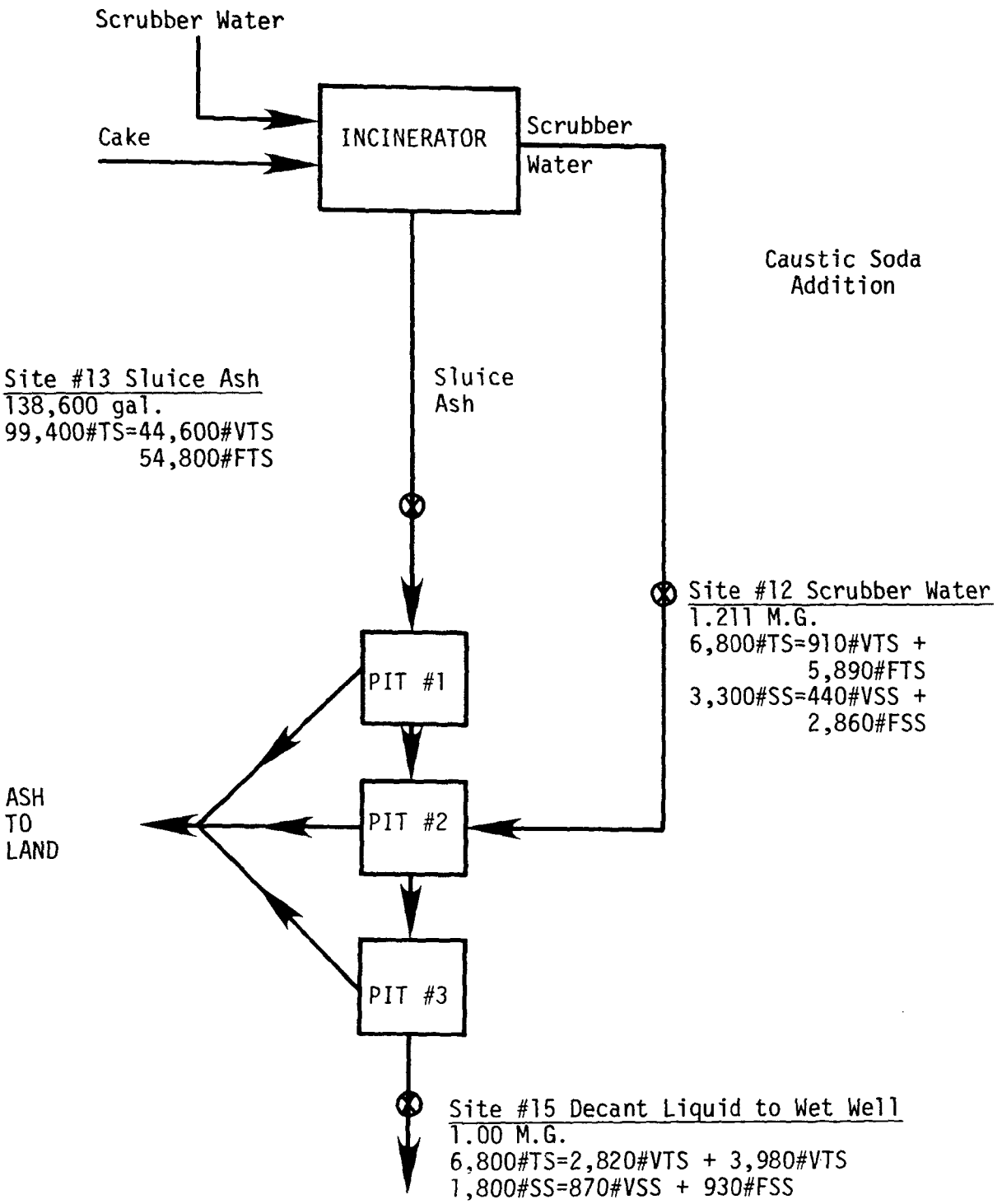

FIGURE H-6. (continued)

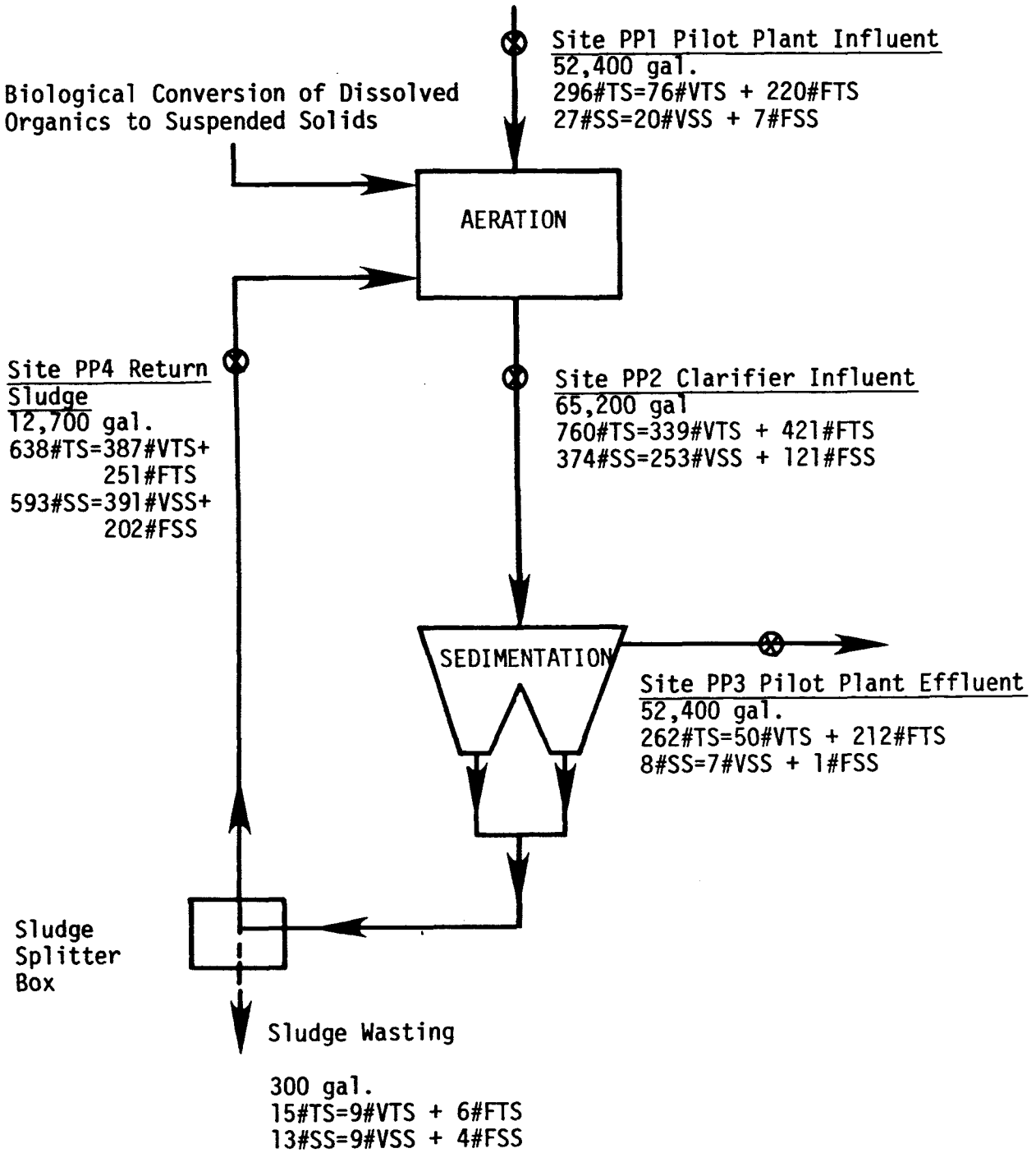

FIGURE H-7. SOLIDS BALANCE - PILOT PLANT
(12:01 A.M. 4/15 to 11 P.M. 4/16/73)

c. Vacuum filter cake production was approximately 1740 wet pounds per million gallons of influent wastewater or 470 dry pounds per million gallons.

d. Approximately 310 pounds of dry solids accumulated in the ash decant pits per million gallons of influent wastewater.

7. Heavy Metals:

A total metals balance has been calculated and is summarized in Table H-6. Of primary importance from this balance are the following:

a. The recirculation of vacuum filter filtrate and decant liquid from the ash pits accounted for the following proportions of influent total metals:

Pb - 2.4%	Cd - 5.6%
Mn - 1.4%	Zn - 2.5%
Cr - 2.4%	Cu - 3.4%
Fe - 3.1%	Al - 4.7%
Ni - 1.1%	

b. Except for lead and nickel which showed increases, the following percentage removals resulted from primary treatment:

Pb - 91.3% increase	Cd - 38.5%
Mn - 12.2%	Zn - 29.5%
Cr - 20.3%	Cu - 14.3%
Fe - 41.6%	Al - 35.3%
Ni - 62.4% increase	

c. Except for lead and nickel which increased, the following percentage removals were realized in the pilot plant:

Pb - 15.4% increase	Cd - none in influent or effluent
Mn - 76.9%	Zn - 16.7%
Cr - no removal	Cu - no removal
Fe - 52.4%	Al - 7.1%
Ni - 33.0% increase	

TABLE H-5

TOTAL METALS BALANCE

PRIMARY TREATMENT PLANT - 4/15/73 - 4/16/73

Pump #4 Main Pump Station - Site 4

Pb = 1050 lb.	Cd = 38 lb.
Mn = 1050	Zn = 1430
Cr = 285	Cu = 334
Fe = 6060	Al = 5850
Ni = 212	

Combination of Sites 1, 2, & 3

Pb = 928 lb.	Cd = 16 lb.
Mn = 1020	Zn = 1190
Cr = 223	Cu = 372
Fe = 6130	Al = 4040
Ni = 164	

Grit Channel Influent - Site 5

Pb = 711 lb.	Cd = 39 lb.
Mn = 864	Zn = 1560
Cr = 266	Cu = 252
Fe = 5940	Al = 5180
Ni = 186	

Filtrate

Pb = 10 lb.	Cd = 1 lb.
Mn = 9	Zn = 23
Cr = 5	Cu = 7
Fe = 116	Al = 197
Ni = 1	

Preaeration Influent - Site 6

Pb = 699 lb.	Cd = 18 lb.
Mn = 850	Zn = 1440
Cr = 249	Cu = 268
Fe = 5454	Al = 5210
Ni = 177	

Decant Liquid

Pb = 7 lb.	Cd = 0 lb.
Mn = 3	Zn = 13
Cr = 1	Cu = 2
Fe = 52	Al = 50
Ni = 1	

TABLE H-5. (continued)

Pump #4 Main Pump Station - Site 4

Pb = 1050 lb.	Cd = 38 lb.
Mn = 1050	Zn = 1430
Cr = 285	Cu = 334
Fe = 6060	Al = 5850
Ni = 212	

Scrubber Water - Site 12

Pb = 13 lb.	Cd = 1 lb.
Mn = 4	Zn = 28
Cr = 2	Cu = 4
Fe = 82	Al - 124
Ni = 1	

Primary Effluent - Site 7

Pb = 1360 lb.	Cd = 24 lb.
Mn = 759	Zn = 1100
Cr = 212	Cu = 216
Fe = 3470	Al = 3350
Ni = 302	

Sluice Ash - Site 13

Pb = 13 lb.	Cd = 2 lb.
Mn = 10	Zn = 10
Cr = 5	Cu = 10
Fe = 51	Al = 186
Ni = 2	

Primary Sludge - Site 8

Pb = 91 lb.	Cd = 5 lb.
Mn = 84	Zn = 66
Cr = 40	Cu = 56
Fe = 350	Al = 1300
Ni = 12	

Decant Liquid to Wet Well - Site 15

Pb = 7 lb.	Cd = 0 lb.
Mn = 3	Zn = 13
Cr = 1	Cu = 2
Fe = 52	Al = 50
Ni = 1	Co = 0

Vacuum Filter Filtrate - Site 11

Pb = 10 lb.	Cd = 1
Mn = 9	Zn = 23
Cr = 5	Cu = 7
Fe = 116	Al = 197
Ni = 1	Co = 0

TABLE H-5. (continued)

STEP AERATION PILOT PLANT - 4/15/73 - 4/16/73

Pilot Plant Influent - Site PP1

Pb = 0.13 lb.	Cd = 0.00 lb.
Mn = 0.13	Zn = 0.18
Cr = 0.03	Cu = 0.03
Fe = 0.63	Al = 0.56
Ni = 0.02	

Clarifier Influent - Site PP2

Pb = 0.56 lb.	Cd = 0.03 lb.
Mn = 1.31	Zn = 1.29
Cr = 0.20	Cu = 0.23
Fe = 5.74	Al = 5.71
Ni = 0.06	

Pilot Plant Effluent - Site PP3

Pb = 0.15 lb.	Cd = 0.00 lb.
Mn = 0.03	Zn = 0.05
Cr = 0.03	Cu = 0.03
Fe = 0.30	Al - 0.52
Ni = 0.03	

Return Sludge - Site PP4

Pb = 0.40 lb.	Cd = 0.04 lb.
Mn = 1.17	Zn = 0.74
Cr = 0.21	Cu = 0.26
Fe = 3.22	Al - 6.04
Ni = 0.04	

8. Total Kjeldahl Nitrogen:

The following Table presents a summary of average total Kjeldahl nitrogen (TKN) concentrations in the primary influent and effluent and in the Pilot Plant effluent and the TKN percentage removal.

Site	Average TKN (mg/l)	
	4/15/73	4/16/73
4-Pump 4, Main Pump Station	9.6	8.1
7-Primary effluent	7.2	1.9
PP3-Pilot Plant effluent	3.8	3.9
TKN removal (%)		
Primary treatment	25.0	76.5
Overall	60.4	51.9

Influent TKN concentrations during this study are comparable with influent concentrations over the last five years, but are less than the TKN concentration typical of weak sewage.

9. Total Phosphorus:

The following Table summarizes total phosphorus concentrations in the primary influent and effluent and in the Pilot Plant influent and effluent and the percentage removal of phosphorus. Influent total phosphorus concentrations are typical of weak sewage. Phosphorus removals were characteristic of activated sludge treatment.

Site	Average Total Phosphorus as Total P* (mg/l)	
	4/15/73	4/16/73
4-Pump 4, Main Pump Station	4.5	5.3
7-Primary effluent	3.8	3.9
PP1-Pilot Plant influent	3.6	4.7
PP3-Pilot Plant effluent	3.4	3.9
Total Phosphorus removal (%)		
Primary treatment	15.6	26.4
Pilot Plant	5.6	17.0
Overall	24.4	26.4

* Average calculated from grab samples.

10. Grease, Cyanide, and Phenol:

Grease concentrations and the percentage removal of grease are presented in the following Table. Influent grease concentrations during this study are comparable to influent grease concentrations of the last five years and are typical of concentrations in weak sewage.

Site	Grease concentration[1] (mg/l)	
	4/15/73	4/16/73
4-Pump 4, Main Pump Station	52	56
7-Primary effluent	52	71
PP3-Pilot Plant effluent	43	40
Grease removal (%)		
Primary treatment	0	26.8 (increase)
Pilot Plant	17.3	43.7
Overall	17.3	28.6

During the duration of this study, no cyanide was found in the primary influent, primary effluent, or Pilot Plant effluent. This is in agreement with the absence of cyanide in other samples taken between January and April 1973.

Phenol concentrations and the percentage removal of phenol are presented in the following Table. Influent phenol concentrations are within the range of phenol concentrations reported for samples taken between January and April 1973.

Site	Average phenol concentration[2] (mg/l)	
	4/15/73	4/16/73
4-Pump 4, Main Pump Station	0.031[3]	0.007
7-Primary effluent	0.009	0.005
PP3-Pilot Plant effluent	0.005	0.003
Phenol removal (%)		
Primary treatment	71.0	28.6
Pilot Plant	44.4	40.0
Overall	83.9	57.1

[1] 24 hr. composite constructed from three eight-hour composites.
[2] Average calculated from grab samples.
[3] The 7:00 p.m. grab sample had a phenol concentration of 0.189 mg/l; however, omitting this sample, the average is 0.016 mg/l.

APPENDIX I. DIVERSION STRUCTURE DATA

Refer to Figures I-1 and I-2 together with data on Table I-1.

Data are based on grab samples. Other data may vary considerably from those values given.

TABLE I-1

DIVERSION STRUCTURE DATA

Sewer Region	Diversion Structure	pH	BOD	Susp. Solids	Grease	Chlorine	COD	Phenol	Cyanide	Pb	Mn	Cr	Fe	Ni
1 (R)	A-42	7.2	136	94	157	162	631	.042	.000	.320	.270	.230	1.640	
	Average													
2 (R)	A-41	7.1	99	90	110	100	226	.014	.000	.000	.140	.000	.970	
	Average													
3 (R)	A-40	7.0	19	38	32	59	71	.018	.000	.270	.090	.000	1.540	
(R)	A-39 River Crossing - Average													
4 (R)	A-38	6.6	73	58	195	125	106	.029	.000	.230	.200	.130	1.680	
(R)	A-37	7.3	186	338	78	43	448	.040	.000	.090	.440	.050	5.340	
(R)	A-36	7.4	22	54	32	65	97	.004	.000	.340	.200	.050	3.380	
(R)	A-35	7.1	413	134	60	141	584	.089	.000	.560	.160	.040	1.770	
	Average	7.1	174	146	91	94	309	.041	.000	.305	.250	.068	3.043	
5 (R)	A-34	7.4	156	274	59	81	458	.630	.000	----	.640	.120	13.750	
(R)	A-33	9.2	234	750	69	147	939	.037	.000	----	.340	.070	5.390	
(R)	A-32	7.0	198	232	86	65	611	.023	.000	.000	.296	.060	4.140	
(R)	A-31	7.1	234	188	1121	1443	916	.004	.000	.910	.930	.200	13.610	
(R)	A-30	9.9	149	144	114	16	646	.008	.000	.200	.444	.030	2.580	
	Average	8.1	194	318	90	350	714	.140	.000	.370	.530	.096	7.894	
6 (R)	A-29	7.8	161	140	146	87	373	.007	.000	.080	.492	.40	2.260	
	Average Same -													
7 (R)	A-28	6.8	152	764	71	109	362	.002	.000	.360	.330	.150	5.560	

TABLE I-1. (continued)

Sewer Region	Diversion Structure	pH	BOD	Susp. Solids	Grease	Chlorine	COD	Phenol	Cyanide	Pb	Mn	Cr	Fe	Ni
(I-C)	A-27	8.9	374	216	238	89	744	.014	.000	.250	.110	.020	1.880	
(I-C)	A-26	7.1	70	260	93	56	249	.016	.000	.370	.470	.980	3.690	
(I-C)	A-25	9.1	450	748	86	172	2896	1.022	.014	2.800	.600	.430	9.880	
(I-C)	A-24	6.5	2310	740	102	94	5096	.118	.000	.000	.320	.020	2.870	
	Average	7.7	671	546	118	104	1869	.234	.003	.756	.366	.320	4.776	
8 (I-C)	A-23	9.1	342	538	75	172	727	.030	.000	1.100	.950	.000	9.400	
(I-C)	A-22	7.9	208	172	96	67	366	.014	.000	.100	.150	.100	1.500	
	Average	8.5	275	355	85	120	547	.022	.000	.600	.550	.050	5.450	
Sewerage Region Basins														
9 (I-C)	A-21	7.4	197	494	311	65	426	.210	.000	.570	.440	.090	12.530	.080
(I-C)	A-20	8.8	156	212	67	234	411	.033	.003	.520	.250	.050	4.980	.050
(I-C)	A-19	7.4	153	238	41	228	232	.039	.000	1.040	.270	.310	3.450	.000
(CD)	A-18	7.4	72	380	271	39	548	.022	.000	.200	.710	.240	8.500	.000
(CD)	A-17	6.8	80	442	155	43	408	.009	.000	.360	.890	.000	11.580	.076
(CD)	A-16	7.1	211	516	122	160	345	.044	.000	.550	1.030	.060	13.840	.070
(CD)	A-15	6.9	9	26	47	27	24	.004	.000	.200	.160	.020	1.580	.030
(CD)	A-14	7.4	42	64	48	69	119	.017	.000	.200	.120	.110	1.750	.120
(CD)	A-13	7.4	252	204	83	101	642	.037	.000	.500	.120	.100	1.730	.030
	Average	7.4	130	286	127	107	351	.046	.000	.460	.502	.109	6.660	.050
10 (CD)	A-12	7.5	98	360	96	78	242	.019	.000	.200	.650	.000	6.740	.040
(CD)	A-11	7.5	107	207	37	48	316	.037	.000					
(CD)	A-10	8.0	213	196	149	59	348	.025	.000					

TABLE I-1. (continued)

Sewer Region	Diversion Structure	pH	BOD	Susp. Solids	Grease	Chlorine	COD	Phenol	Cyanide	Pb	Mn	Cr	Fe	Ni
10 (CD)	A-9	9.2	141	615	324	67	368	.031	.000	.200	1.270	.300	2.990	.020
(CD)	A-8	7.8	73	280	15	32	231	.018	.350					
(CD)	A-7	6.8	75	116	62	32	151	.012	.000	.000	.310	.120	4.960	.040
(CD)	A-6	8.1	360	284	612	78	474	.024	.000	.100	.690	.040	3.690	
(CD)	A-3	8.0	200	333	46									
(CD)	A-4	7.6	240	256	85	56	490	.041	.000	.000	.400	.070	1.850	.000
(CD)	M-1	9.1	126	218	121	32	371	.018	.000	1.200	.320	.260	2.760	.070
(CD)	M-2	7.9	155	192	78	75		.066						
(CD)	M-3	7.0	293	294	114	65	587	.051	.000	.310	.110	.200	1.760	.020
	Average	7.9	173	279	145	57	358	.038	.035	.287	.536	.141	3.536	.032
11 (CD)	M-4	7.2	143	176	114	54	510	.071	.000	.440	.110	.410	1.590	.020
(CD)	M-5	7.0	147	146	64	108	314	.166	.000	.200	.140	.030	1.250	.030
	Average	7.1	145	161	89	81	412	.119	.000	.320	.125	.220	1.420	.025
12 (CD)	M-19	7.8	174	204	107	94	421	.030	.000	.000	.250	.000	.750	
13 (CD)	M19A	7.4	257	164	55	67		.034						
(CD)	M19B	7.3	213	322	38	83	439	.045	.006	.200	.540	.060	9.040	
	Average	7.35	235	243	47	75	439	.040	.006	.200	.540	.060	9.040	
14 (C-R)	M-29	7.4	120	314	55	74		.028						
Access (C-R)	M-30	7.4	444	214	423	67	308	.020	.000	.000	.220	.000	2.500	
	Average	7.4	282	264	239	71	308	.024	.000	.000	.220	.000	2.500	

TABLE I-1. (continued)

Sewer Region	Diversion Structure	pH	BOD	Susp. Solids	Grease	Chlorine	COD	Phenol	Cyanide	Pb	Mn	Cr	Fe	Ni
15 (HI)	M-31	7.4	126	199	35	77		.023						
	Average - Same													
16 (HI)	M-32	6.9	94	138	54	52		.013						
(HI)	M-33	6.5	31	69	21	37		.458						
(HI)	M-35	7.0	93	119	56	58		.046						
(HI)	M-36	7.8	294	312	84	65		.021						
(HI)	M-37 Ejector Structure													
(HI)	M-38	7.0	150	132	56									
(HI)	M-39	7.6	143	163	61	68								
(HI-R)	M-40	7.2	168	203	58	70		.005						
(HI-R)	M-41 Glenwood Access Shaft													
	Average	7.1	139	162	56	58		.109						
17 (CD-R)	A-56	6.9	30	70	15	35		.014						
(CD-R)	A-57	6.8	95	68	76			.009						
(CD-R)	A-58	6.6	43	144	126	50		.008	.000	.580	.020	2.840	.000	
(CD-R)	A-59	6.9	108	137	84	36		.021						
(CD-R)	A-60	5.0	2760	3390	2172	106	5943	.031	.000	.500	1.360	.000		
(CD-R)	A-61	8.5	637	584	5758	619	1566	.205	.000		.390	.000	3.660	.040
(CD-R)	A-62	7.1	802	566	246	122		.008	.000					
(CD-R)	A-63	7.4	38	93	92	50		.019						

TABLE I-1. (continued)

Sewer Region	Diversion Structure	pH	BOD	Susp. Solids	Grease	Chlorine	COD	Phenol	Cyanide	Pb	Mn	Cr	Fe	Ni
17 (CD-R)	A-64	7.2	192	90	81	69		.019						
(CD-R)	A-65	7.3	262	41	130	81		.015						
	Average	7.0	497	518	878	130	2542	.035	.000	.250	.777	.007	4.067	.020
18 (HI)	A-55	6.5	27	122	30	82		.026						
(CD-HI)	A-54	Access Shaft												
(CD)	A-51	7.3	171	400	203	167	557	.070	.000	.300	.730	.040	6.780	.080
(CD)	A-50	7.1	130	187	53	68		.019						
(CD)	A-49	7.4	210	236	105	44	365	.053	.000	.000	.200	.020	2.030	.000
(CD)	A-48	7.3	110	146	570	1444	414	.044	.000	.100	.480	.000	1.350	
(CD)	A-47	6.8	330	31	28	49	411	.021	.000					
(CD)	0-43	7.1	482	144	185	82	751	.016	.000	.150	.850	.030	4.270	.030
	Average	7.1	208	181	168	277	500	.036	.000	.138	.565	.023	3.608	.037
19 (CD-R)	0-41	7.0	80	80	38	22	105	.005	.000	.200	.240	.060	4.270	.000
(CD-R)	0-40	6.9	48	78	97	48	164	.007	.000	.520	.290	.020	1.810	.020
(CD-R)	0-39	8.2	640	718	499	54		.039						
(C-R)	0-38	7.1	190	536	178	59	657	.102	.000	.400	.390	.050	6.590	.010
(C-R)	0-37	7.1	143	156	54	58		.039						
(C-R)	0-36	5.9	1260	416	220	65	2617	.025	.000	.400	.150	.080	5.710	.050
(C-R)	0-35	9.0	684	254	487	125	1126	.016	.000	.470	2.510	12.340	10.540	3.380
(C-R)	0-34	7.0	87	240	88	71	394	.003	.185	.440	.929	5.510	19.920	.070

TABLE I-1. (continued)

Sewer Region	Diversion Structure	pH	BOD	Susp. Solids	Grease	Chlorine	COD	Phenol	Cyanide	Pb	Mn	Cr	Fe	Ni
19 (C-R)	O-33	7.2	165	256	107	106	301	.021	.000	.000	.120	.010	1.050	.000
(C-R)	O-32			126	68	40								
(C-R)	O-31	7.2	68	103	46	40		.015						
	Average	7.3	337	269	171	63	766	.027	.026	.347	.661	2.581	7.127	.504
20 (R)	O-30	7.8	241	205	118	90		.012						
	Average - Same													
21 (C-R)	O-29	7.6	178	313	104	68		.024						
(R)	O-28	7.5	2	165	63	39		.000	.000	.220	.520	.070	3.950	.050
	Average - Same													
22 (R)	O-27	7.5	102	554	101	150	265	.018	.000	.000	.310	.000	1.760	
	Average - Same													
23 (R)	O-26	7.1	192	212	60	56		.014						
	Average - Same													
24 (R)	O-25	7.1	104	78	81	156	224	.012	.000					
	Average - Same													
25 (I-R)	M-27	7.1	218	160	79	158	336	.012	.000		.240	.140	3.600	.010
(I-R)	M-28	9.2	25	234	46	21		.037						
	Average	8.2	122	197	63	90	336	.025	.000		.240	.140	3.600	.010
26 (HI-R)	M-26	6.3	15	113	20	22		.022						
(HI-R)	M-24	7.5	49	24	24	53	96	.011	.000					
(HI-R)	M-23	3.3	33	100	30	27	240	.161	.000					

TABLE I-1. (continued)

Sewer Region	Diversion Structure	pH	BOD	Susp. Solids	Grease	Chlorine	COD	Phenol	Cyanide	Pb	Mn	Cr	Fe	Ni
26 (R)	M-22	7.0	180	166	87	83	342	.014	.000	.000	.180	.010	.540	.040
(R)	M-21	6.9	88	84	113	60	169	.016	.000		.125	.030	2.120	.030
(R)	M-20	7.3	229	170	168	83	479	.027	.000	.000	.210	.020	2.320	.020
(R)	M-18	7.0	140	222	94	64	401	.012	.000					
(R)	M-17	6.9	282	1290	185	32	993	.108	.000					
(R)	M-16	9.7	148	214	100	94	415	.123	.000	.200	.250	.000	1.770	.040
(R)	M-15	8.3	204	395	195	23		.015						
(R)	M-14	7.0	93	173	46	69	228	.075	.000	.210	.925	.040	5.150	.020
(R)	M-13	6.9	138	129	80	65	372	.028	.000	.000	1.070	.250	9.850	.030
(R)	M-12	6.6	281	655	857	82	555	.013	.000	.000	.560	.070	8.970	.020
(R)	M-11	7.0	17	61	31	65	96	.006	.000	.000	.960	.060	8.860	.030
(R)	M-10	6.6	24	101	47	33	45	.008	.000		1.732	.140	18.730	.050
(R)	M-8	6.9	73	44	51	71	127	.017	.000	.000	.200	.020	1.560	.040
(R)	M-7	6.9	111	62	51	92	214	.006	.000	.190	.210	.020	2.590	.020
(R)	M-9	7.8	282	372	118	141	659	.034	.000	.000	.280	.040	4.220	.040
	Average	6.9	134	243	128	64	339	.039	.000	.060	.559	.058	5.557	.032
27 (R)	M-6	5.4	32	22	35	60	60	.003	.000	.280	.160	.040	2.370	.020
	Average - Same													
28 (R)	O-14	6.9	142	144	110	150	344	.000	.000	.100	.220	.000	1.200	
	Average - Same													

TABLE I-1. (continued)

Sewer Region	Diversion Structure	pH	BOD	Susp. Solids	Grease	Chlorine	COD	Phenol	Cyanide	Pb	Mn	Cr	Fe	Ni
29 (R)	0-14	6.9	142	144	110	150	344	.000	.000	.100	.220	.000	1.200	
	Average - Same													
30 (R)	0-14	6.9	142	144	110	150	344	.000	.000	.100	.220	.000	1.200	
	Average - Same													
31 (R)	0-14	6.9	142	144	110	150	344	.000	.000	.100	.220	.000	1.200	
	Average - Same													
32 (R)	0-14	6.9	142	144	110	150	344	.000	.000	.100	.220	.000	1.200	
	Average - Same													
33 (R)	0-13	615	251	678	270	49	1358	.040	.000	9.600	.590	.080	7.040	.140
(R)	0-12													
(R)	0-11	7.9	14	626	314	76	1373	.020	.000	.350	1.260	.050	1.430	.040
(R)	0-10	10.2	20	91	19	53	176	.007	.000	16.680	.380	.040	4.240	.080
(R)	0-9	7.4	40	58	74	319	149	.006	.000	.190	.110	.030	2.570	.130
(R)	0-8	7.2	111	308	72	71	210	.029	.000					
	C-1 Deleted													
(C)	C-2				86									
(C)	C-3	6.7	81	288	104	67	181	.008	.000	.300	.870	.170	2.730	.040
(C)	C-5	6.9	146	126	123	72	408	.012	.000	.000	.300	.090	1.640	.020
(C)	C-5A	6.7	83	144	47	59		.030	.000					
(C)	C-7	7.0	50	114	531	67	273	.005	.000	.000	.140	.040	.600	.010
(C)	C-11	7.5	130	120	83	87	357	.021	.000	.000	.198	.040	1.120	.030

TABLE I-1. (continued)

Sewer Region	Diversion Structure	pH	BOD	Susp. Solids	Grease	Chlorine	COD	Phenol	Cyanide	Pb	Mn	Cr	Fe	Ni
33 (R)	C-12	7.1	155	172	172	72	418	.035	.000	.000	.210	.040	1.800	.000
(R)	C-13													
(R)	C-14	7.1	136	147	70	56	247	.017	.068	.060	.110	.140	1.690	.870
(R)	C-15	7.2	222	148	77	108	401	.355	.000	.150	.180	.030	2.320	.030
(R)	C-16	7.1	81	649	39	55		.003	.000					
(R)	C-17	6.3		10	30	43	4	.005	.000					
(R)	C-18													
(R)	C-19	7.3	164	144	69	106	270	.044	.000					
	Average	7.7	112	239	128	85	416	.040	.004	2.485	.395	.068	2.471	.151
34 (R)	C-20	7.5	165	348	81	54	283	.030	.000					
(C-R)	C-22	7.5	162	192	102	82	277	.114	.000	.270	.190	.020	1.670	.020
(C-R)	C-23	7.3	204	192	90	55		.000						
(R)	C-24	7.3	139	177	52	53		.035						
(R)	C-25	7.3	236	286	94	64		.025						
(R)	C-26A	6.9	194	163	69	61		.031						
(R)	C-27	7.7	13	47	25	65	63	.010	.000	1.530	.280	.030	1.660	.010
(R)	C-28	7.1	499	162	131	92	636	.028	.000	.180	.330	.050	2.520	.030
(R)	C-29	7.9	220	232	165	211	528	.059	.000	.200	.250	.000	3.100	.000
	Average	7.4	204	200	90	82	357	.037	.000	.545	.263	.025	2.238	.015
35 W(C-R)	M-46 Access Shaft													
(C-R)	M-47	7.5	118	118	69	106	292	.031	.000	.000	.230	.000	2.500	

TABLE I-1. (continued)

Sewer Region	Diversion Structure	pH	BOD	Susp. Solids	Grease	Chlorine	COD	Phenol	Cyanide	Pb	Mn	Cr	Fe	Ni
35W	Average - Same													
36 X(HI-R)	M-34	7.8	15	102	19									
Becks Run	Average - Same													
37 Y(HI-R)	M-42	8.7	154	280	87	226		.023						
Streets Run	Average - Same													
38 P (R)	0-1	7.4	154	214	110	61	439	.039	.000	.170	.270	.100	3.900	.010
Stowe Twp. (R)	0-2	8.9	339	382	127	98	767	.079	.000	.170	.230	.040	4.330	.050
(R)	0-3	7.8	107	464	78	60	271	.016	.000	.680	.520	.330	5.230	.040
(R)	0-4	6.7	51	70	62	50		.006	.000					
(R)	0-5	7.4	49	76	45	49	77	.013	.000	.300	.270	.080	1.590	.030
(R)	0-5A	7.8	123	178	61	54	54	.052	.000	.610	.820	.050	1.970	.020
(R)	0-5B	7.1	66	44	56	49	186	.016	.000	.000	1.464	.000	2.070	.000
	0-6	7.4	360	146	673	65	254	.603	.000					
	Average	7.6	156	197	152	61	293	.103	.000	.322	.596	.100	3.182	.025
39 O (R)	0-15	7.3	73	73	47	139	198	.016	.000	.100	.130	.000	1.000	
Lowries (R)	0-16	7.2	150	142	60	72	159	.020	.000	.000	.160	.040	1.030	.030
Run (R)	0-17	7.7	176	284	102	68	498	.008	.000					
	Average	7.4	133	166	70	93	285	.015	.000	.050	.145	.020	1.015	.030
40 N (R)	0-18	7.9	82	100	36	161	490	.016	.000	.000	.100	.020	5.320	.030
Spruce Run (R)	0-19	7.5	229	100	155	96	572	.135	.000					

TABLE I-1. (continued)

Sewer Region	Diversion Structure	pH	BOD	Susp. Solids	Grease	Chlorine	COD	Phenol	Cyanide	Pb	Mn	Cr	Fe	Ni
40 N (C-R)	O-20	8.0	206	246	161	74	550	.037	.000					
	Average	7.8	172	149	117	110	537	.063	.000	.000	.100	.020	5.320	.030
41 M (C-R)	O-21	6.8	212	162	118	80	216	.064	.000					
Jacks Run (C-R)	O-22	7.0	1855	3101	229	60	2434	.136	.000					
(C-R)	O-23	7.6	358	204	68	63		.008						
(C-R)	O-24	7.2	114	71	57	19		.008						
	Average	7.2	635	885	118	56	1325	.054	.000					
42 L (C-R)	A-66	7.5	104	101	41	72								
Girty's Run (C-R)	A-67	7.4	122	156	93	139	296	.017	.000	.000	.370	2.900	1.400	
	Average	7.45	113	129	67	105	296	.017	.000	.000	.370	2.900	1.400	
43 K (C-R)	A-68	7.4	82	59	29									
Pine Creek Average - Same														
44 J (R)	A-69	7.1	62	82	58									
Guyasuta Run (R)	A-70	7.2	135	142	170	47		.014						
(R)	A-71	7.6	146	266	90	77		.005						
(R)	A-72	7.5	132	153	82	56		.055						
(R)	A-73	9.5	273	220	144	54		.026						
(R)	A-74	8.4	379	574	161	57		.015						
(R)	A-74A	7.4	208	319	167	70		.082						
(R)	A-75	7.3	207	250	261	75		.032						

TABLE I-1. (continued)

Sewer Region	Diversion Structure	pH	BOD	Susp. Solids	Grease	Chlorine	COD	Phenol	Cyanide	Pb	Mn	Cr	Fe	Ni
44 J (R)	A-76	8.0	181	325	87	74		.013						
(R)	A-77	6.8	216	187	62	57		.043						
(R)	A-78	7.3	233	327	82									
	Average	7.6	160	259	124	63		.032						
45 I (C-R-I)	A-79	8.1	101	153	62	63								
Squaw Run (C-R-I)	A-82	7.3	202	251	72	129		.034						
(C-R-I)	A-84	7.0	141	160	57									
(C-R-I)	A-85	7.2	138	272	62									
	Average	7.4	146	209	63	96		.034						
46 H (R-I)	A-45	7.0	145	1596	24	108	450	.039	.000	.450	.510	.350	16.030	.050
Plum (R-I)	A-43	6.9	258	1568	110	323	484	.047	.000	.430	.560	.210	15.980	.110
Creek(R-I)	A-44	7.0	677	86	89	94	857	.025	.000	.000	.260	.100	1.030	
	Average	7.0	360	1083	74	175	597	.037	.000	.293	.443	.220	11.013	.080
47 C (R-C-I)	T-1	7.2	61	128	143	400	194			.100	.910	.010	1.540	.150
Turtle Creek (R-I)	T-2	7.2	336	460	102	64	545	.108	.000					
(R-I)	T-3	7.8	95	182	73	74	449	.006	.000	1.230	2.560	.100	10.330	.080
(R-I)	T-4	7.1	104	118	74	81	237	.019	.000		.320	.040	1.370	.030
(R)	T-7	5.6	60	90	55	149	372	.018	.023					
(R)	T-8	7.4	209	462	123	71	651	.010	.000	.000	.260	.040	3.710	.020
(R)	T-9	7.4	258	308	230	98	248	.041	.000					
(R)	T-10	6.8	177	254	104	196	471	.010	.000	.000	.260	.080	2.270	.030

TABLE I-1. (continued)

Sewer Region	Diversion Structure	pH	BOD	Susp. Solids	Grease	Chlorine	COD	Phenol	Cyanide	Pb	Mn	Cr	Fe	Ni
47 G (R)	T-11	7.1	32	106	31	27	116	.011	.000	.460	.250	.040	4.030	.020
(R)	T-12	7.7	113	53	40	80	191	.045	.000	.300	.250	.030	1.890	.110
(R)	T-13	7.5	220	272	117	77		.013						
(R)	T-14	7.6	171	255	53	78		.003						
(R)	T-15	7.0	15	63	102	37	37	.000	.000					
(R)	T-15A	7.2	273	560	549	65	1479	.044	.000					
(R)	T-16	7.3		260	47	63		.034						
(R)	T-16A	7.4	279	361	112	71		.054						
(R)	T-17	7.1	150	128	25	98	296	.024	.000					
(R)	T-18	7.9	370	496	133	175		.047						
(R)	T-19	7.5	41	62	20	109	336	.015	.000					
(R)	T-20													
47 G (R)	T-21	7.5	822	1554	317	116		.008						
(R)	T-22	6.4	71	116	77	141	225	.017	.000	.000	.730	.050	2.600	.080
Turtle Creek (cont.)(R)	T-23	7.5	174	202	106	82	422	.052	.000	.000	.621	.030	5.790	.000
(R)	T-24	7.1	3	246	6	86	59	.009	.000	.340	1.640	.190	10.270	.100
(R)	T-25	7.2	106	188	52	75	364	.033	.000	.290	.480	.030	1.620	.000
(R)	T-26	7.4	222	338	119	82	604	.043	.000	.390	.160	.040	1.840	.030
(R)	T-26A	7.2	84	82	42	22	232	.005	.000	.340	.220	.070	1.700	.000
(R)	T-27	6.9	86	85		78	211	.003	.000	.000	.240	.050	.930	.000
(R)	T-29	7.4	495	465	169	92		.010						

TABLE I-1. (continued)

Sewer Region	Diversion Structure	pH	BOD	Susp. Solids	Grease	Chlorine	COD	Phenol	Cyanide	Pb	Mn	Cr	Fe	Ni
47 G (R)	T-29A	7.4	183	224	96	71	459	.081	.000	.480	.690	.040	2.220	.010
(R)	T-31	7.2	76	130	55	78	706	.014	.000					
(R)	T-32	7.4	153	64	119	71	446	.041	.000	.380	.150	.050	3.220	.050
(R)	T-33	6.9	54	74	39	44	78	.023	.000	.260	.340	.050	5.280	.000
	Average	7.2	177	262	103	117	377	.027	.001	.286	.593	.055	3.565	.042
48 F (HI-R)	M-42	8.7	154	280	87	226		.023						
Thompson Run (HI-R)	M-49	7.4	159	184	88			.037						
	Average	8.1	157	232	875	226		.030						
49 E (HI-R)	M-43	8.2	190	278	62	151								
Homestead West Run (HI-R)	M-44	7.5	199	358	128									
(HI-R)	M-45	7.3		198	160	163	462	.036	.000	.240	.540	.080	5.350	.050
	Average	7.7	195	278	117	157	462	.036	.000	.240	.540	.080	5.350	.050
50 D (HI-R)	M-48	7.8	256	263	150	66		.048						
Swissvale Rankin (HI-R)	M-49	7.4	159	184	88			.037						
Braddock (HI-R)	M-50	9.6	155	362	99	81	558	.010	.015	.270	.250	.530	4.390	.110
(HI-C)	M-51	7.4	137	1356	14,900	278	690	.024	.000	1.860	1.320	.160	20.840	.210
(HI-C)	M-52	7.1	252	302	131	87	709	.063	.000	.700	.376	.080	6.240	.048
(HI-C)	M-53	6.9	480	142	111	48	751	.011	.004	.490	.410	.030	3.810	.030
(HI-C)	M-54	6.8	120	222	88	59	333	.015	.006	1.170	.210	.030	5.060	.030
(HI-C)	M-55	7.3	108	176	49	75	234	.040	.000	.240	.440	.080	4.760	.010
(HI-C)	M-56	7.2	218	206	104	48	500	.079	.000	.290	.160	.110	2.340	.000

TABLE I-1. (continued)

Sewer Region	Diversion Structure	pH	BOD	Susp. Solids	Grease	Chlorine	COD	Phenol	Cyanide	Pb	Mn	Cr	Fe	Ni
50 D (HI-C)	M-57	6.7	111	102	54	49	194	.005	.000	.460	.151	.060	2.030	.040
Swissvale Rankin (HI-C)	M-58	7.6	266	422	98	92	712	.065	.000	.340	.760	.060	10.340	.040
Braddock (cont.) (HI-C)	M-60	7.3	115	274	44	48	249	.054	.000	.350	.650	.080	18.680	.000
(HI-C)	M-61	7.5	97	296	41	102	313	.022	.000	.570	1.950	.210	15.140	.000
	Average	7.4	190	331	1,227	86	477	.036	.002	.381	.656	.130	8.512	.047
51 C														
Streets Run														
See - 37Y														
52 B														
Becks Run														
See 36 X														
53 A														
Saw Mill Run														
See 31														
54 Q (R)	O-7	7.2	151	134	175	154	180	.045	.000	.000	.290	.100	2.000	.080
Chartiers Creek (C)	C-1 Deleted													
See 33-34 (C)	C-3A	7.1	61	60	55	71	536	.010	.000		.260	.320	2.080	.020
(C)	C-4	7.3	153	132	162	83	427	.021	.000	.012	.300	.030	1.640	.000
(C)	C-6	6.8	99	77	77	33	156	.010	.000	.230	.215	.040	1.890	.000
(C)	C-8	7.0	134	752	99	78	336	.034	.000	.390	1.280	.30	7.690	.030

TABLE I-1. (continued)

Sewer Region	Diversion Structure	pH	BOD	Susp. Solids	Grease	Chlorine	COD	Phenol	Cyanide	Pb	Mn	Cr	Fe	Ni
54 Q (C)	C-9	7.3	120	790	183	92	304	.033	.000	.280	.550	.320	20.680	.030
(C)	C-10	7.4	16	322	244	82	87	.000	.000	.490	3.260	.050	11.290	.020
(C-R)	C-13	7.8	977	6585	632	81	488	.043	.000	27.050	4.150	7.999	29.150	.200
(R)	C-21	7.3	83	2636	1954	120	7051	.182	.000	.390	.360	.050	1.630	.020
54 Q (R)	C-30	6.9	302	275	93	77		.024						
Chartiers Creek (R)	C-31	6.6	193	93	102	47		.109						
See 33-34 (R)	C-32	7.2	131	717	52	51		.029						
(cont.) (R)	C-33													
(R)	C-34	7.2	203	188	78	65		.056						
(C-R)	C-35	7.3	193	237	66	15		.007						
(C-R)	C-36	7.6	464	717	182	62		.011						
(C-R)	C-37	7.7	54	1072	86	30		.035						
(C-R)	C-38	7.3	213	399	47	76		.068						
(C-R)	C-38A	6.7	110	175	47	125		.036						
(C-R)	C-38B	7.5	272	266	90	50		.027						
(C-R)	C-39	7.3	131	251	51	169		.020						
(R)	C-40	6.7	183	255	71	37		.033						
(R)	C-41	7.1	191	486	128	54	865	.027	.000	.080	.135	.070	1.810	.040
(R)	C-42	7.2	246	384	84	73		.027						
(R)	C-43	7.3	116	396	36	33		.009						
(R)	C-44	7.2	234	662	107	64		.027						

TABLE I-1. (continued)

Sewer Region	Diversion Structure	pH	BOD	Susp. Solids	Grease	Chlorine	COD	Phenol	Cyanide	Pb	Mn	Cr	Fe	Ni
54 Q (R)	C-45	7.0	177	218	126	117	447	.015	.000	.000	.160	.020	1.440	.000
(R)	C-45A	7.2	255	306	94			.112						
(R)	C-46	7.3	231	271	82	44		.050						
(C-R)	C-47	7.2	375	496	212	100	366	.077	.000	.300	.580	.040	5.950	.080
(C-R)	C-48	7.1	183	177	71	40		.290						
(R)	C-49	8.3	123	124	90	64	297	.009	.000	.100	.110	.040	1.570	.030
(R)	C-50	7.2	135	192	55	22	310	.028	.000	.100	.080	.030	3.820	.000
(R)	C-50A	7.4	395	1630	386		1058	.012	.000	.400	.780	.080	21.200	.000
(R)	C-50B	7.3	82	118	86	64	137	.007	.000	.200	.170	.150	1.340	.000
(R)	C-51	7.0	20	44		117	63	.000	.000	.000	.300	.020	4.160	.100
(R)	C-52	6.9	293	260	102	60	672	.011	.000	.080	.254	.170	3.570	.010
(R)	C-53	7.6	106	198	50	117	241	.026	.000	.000	.210	.310	4.650	.200
(C-R)	C-54	7.0	215	202	85	72	816	.027	.000	.200	.410	.020	14.080	.000
(HI-R)	C-55	7.1	174	128	70	56	380	.056	.000	.100	.410	.030	2.980	.010
	Average	7.5	200	575	379	73	725	.042	.000	1.556	.679	.477	6.887	.041

I - Industrial
HI - Heavy Industrial
C - Commercial
CD - Commercial Downtown
R - Residential

FIGURE I-1. ALCOSAN SERVICE AREA SEWERAGE BASINS OUTSIDE CITY LIMITS

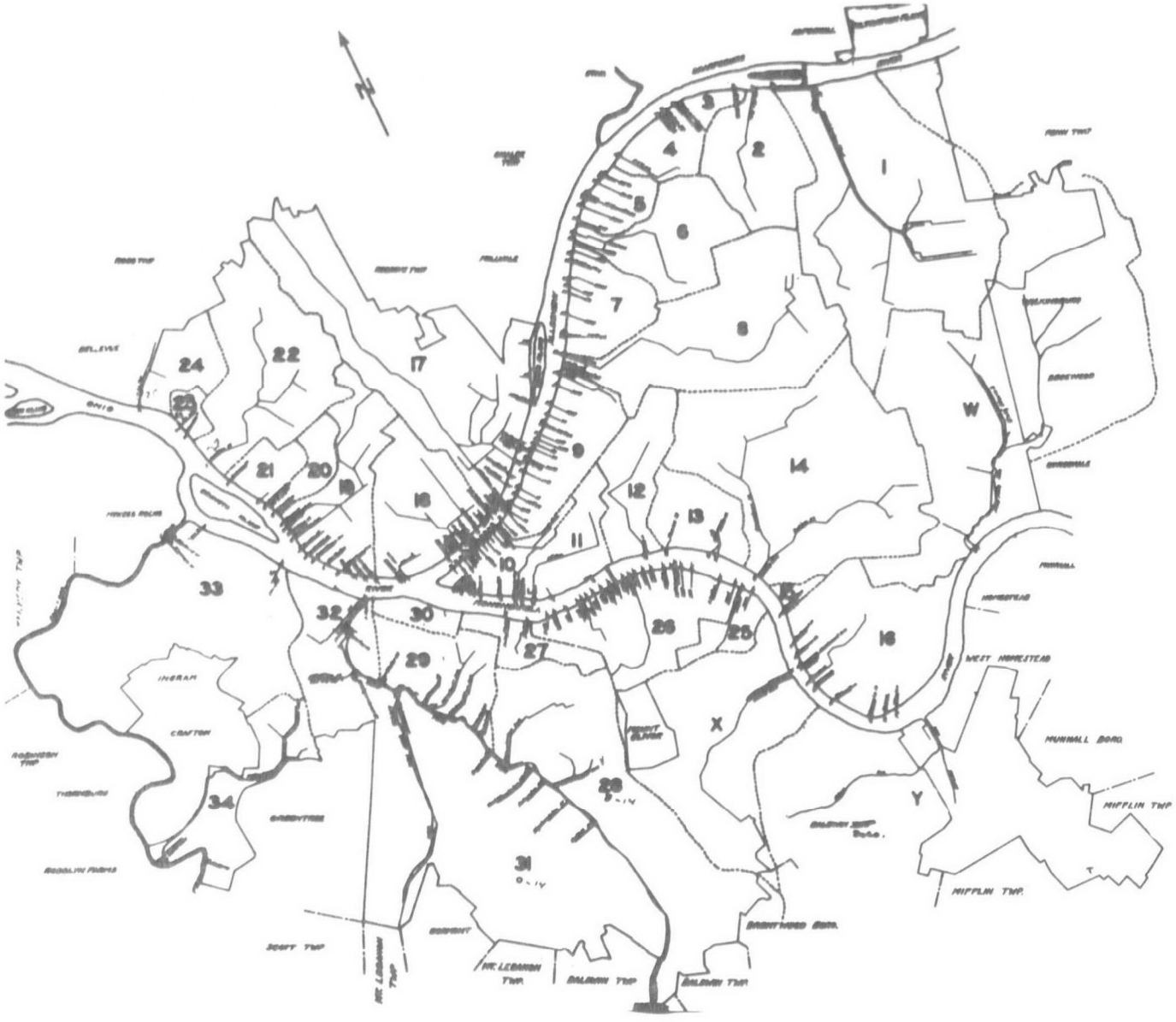

FIGURE I-2. ALCOSAN SEWERAGE BASINS WITHIN CITY LIMITS

APPENDIX J

SURCHARGES, FINANCING AND LEGISLATION

The basis for current sewer service charges and surcharges for the Allegheny County Sanitary Authority is developed in the reports, "Proposed Collection and Treatment - Municipal Sewage and Industrial Wastes" - Allegheny County Sanitary Authority, January 1948 (Ref. 26); "Sewer Service Charges and Surcharges" (Ref. 27) by Joseph J. Olliffe, then Executive Director of ALCOSAN; "ALCOSAN Sewage Rates and Charges" (Ref. 28); and a report by Metcalf & Eddy, Inc.

Olliffe pointed out that "while many different types of sewerage charges are in use throughout the country, it was not necessary to undertake an extended analysis of several possible types for the reason that, lacking taxing powers, the Sanitary Authority could not levy an ad valorem tax (a July 2, 1974 report of the General Accounting Office ruled that the use of ad valorem taxes for development of a user charge system for municipal waste treatment plants does not satisfy requirements of the 1972 Federal Water Pollution Control Act - PL 92-500) on properties served or benefited by its service and that some 90% of the water usage in the Sanitary Authority's service area is through customer meters. Flat rate charges against less than 10% of the customers were developed from a careful estimate of probable water use." (Ref. 29.) Because of the large number of different water suppliers, it was impractical to consider establishing a schedule of sewerage charges on a percentage of each separate water rate schedule. Records were not available for establishing a flat rate schedule of charges throughout the area, and a rate schedule of uniform charges based on a percentage of the water bills would be an impossibility. Accordingly, the remaining alternate for a schedule of charges on a quantity basis was adopted.

The Joint Committee (Ref. 30) Report presents a comprehensive report on the development of charges and financing for wastewater collection and treatment systems. The report is primarily intended to cover the financing and establishment of charges for separate sanitary systems, although combined systems are discussed in the illustrative examples. A discussion is given of the various organizational arrangements for providing and administering this service. The report points out that state and federal laws and policies must be taken into account in developing rate structures. Legal opinion should be sought to determine the alternatives available to a particular jurisdiction or authority.

Stone and Schmidt (Ref. 31) reported on a survey of industrial waste treatment costs and charges. The sewer service rate schedules reported by

the cities queried are represented by the following methods:

1. Fixed, uniform charge per sewer connection.

2. Charge per plumbing fixture.

3. Fixed percentage of water bill.

4. Sliding scale of water consumption.

5. Size of sewer connection.

6. Size of water meter.

7. Ad valorem taxes, corporate levy revenue.

8. Volume of sewage.

9. Volume plus surcharges for BOD, suspended solids, grease, sand or other special waste constituents.

10. Combination of the above.

Stone and Schmidt describe four "rate formula" methods:

1. The "flat rate formula" is based on some charge per unit; e.g., unit of production, water used, or type of industry or establishment.

2. The "quantity-quality rate formula" is based on a charge determined by the volume and strength of the waste as measured.

3. The "California rate formula" is based on a charge which gives consideration to the additional cost of handling commercial and industrial waste while taking into account any taxes paid.

4. The "joint committee rate formula" is based on a charge wherein a portion of the costs of treating industrial and commercial wastes is charged to the community as a whole on the assumption that the presence of these facilities is necessary and beneficial to the economy of the community.

The Federal Water Pollution Control Act Amendments of 1972 require that a system of user charges be adopted by all applicants for federal construction grants. Grantees are also required to recover that portion of the grant amount allocated to the treatment of wastes from industrial users. An industrial user's share is to be based on all factors which significantly influence the cost of the treatment works, including strength of waste, volume and flow characteristics. These regulations appear in the Federal Register (Ref. 32). Industrial cost recovery guidelines were developed by the Virginia Water Resources Research Center and the Virginia

State Water Control Board (Ref. 33). These guidelines appear to be useful for general application.

Soltow (Ref. 34) reported on the development of a model industrial waste ordinance for the San Francisco Bay Area which was prepared by a committee composed of members from regulatory agencies, public sewerage agencies, industrial associations, and the Bay Area Sewage Agency (BASA), a nine-county regional agency created by the California legislature to develop and implement water quality management plans. Highlights of the model ordinance are:

Regulations - Hazardous, toxic and incompatible wastes, including storm drainage and groundwater are prohibited from sewers. Controls are placed on garbage grinders and holding tank discharges. Strict limits are established for arsenic, cadmium, copper, cyanide, lead, mercury, nickel, silver, chromium and zinc. Additional limits are imposed for temperature, oils and greases, pH, hydrocarbons and phenols. Federal effluent limitations apply in instances where these are more stringent than the ordinance.

Wastewater Volume Determination - Rates and charges to be applied to total amount of water used from all sources unless significant quantities are not discharged to the community sewer and this can be shown. Provisions for metering of flows and wastewater measurement are made.

Administration - Industrial dischargers shall be required to file periodic discharge reports. Critical users must obtain wastewater discharge permits. (Critical users may be defined in various ways based on the Standard Industrial Classification Code Manual (Ref. 35), having, for example, the following: flow in excess of 50,000 gallons per day; flow greater than 5% of flow in total municipal system; toxic pollutants in critical amounts defined in federal regulations pursuant to PL 92-500; or having other potential adverse impact upon treatment or collection systems). Permits are issued for five-year periods, are subject to revocation, and may not be transferred or sold. Monitoring may be required, and the local control agency may inspect facilities of industrial waste dischargers. Provisions are made for pretreatment by industry before discharge to sewers when needed, and for protection against accidental discharges. Confidential information regarding manufacturing processes is protected in certain cases, in accordance with the State of California's Water Quality Control Act.

Wastewater User Charge and Fees - All users are classified according to principal activity and wastewater constituents. Fee schedules may include monitoring fees, permit fees, appeal fees and user charges based upon flow quantity and waste characteristics, including cost recovery for capital expenditures.

Enforcement - Accidental discharges must be reported immediately, followed by prompt corrective action. Persons responsible may be subject to penalties under California Water and Fish and Game codes. Industrial plant employees are to be informed of ordinance requirements. Violations of provisions of the industrial waste discharge permit are subject to

issuance of a cease and desist order by the local regulatory agency. A time schedule may be issued as a permit provision to assure compliance with future requirements; e.g., construction of pretreatment facilities. Right of appeal is set forth for users.

Abatement - Violations may be subject to misdemeanor penalties, and special damage procedures. Wastewater discharge permits may be revoked and service may be terminated for cause. Considerable variance exists with regard to powers to impose penalties among political subdivisions. The ordinance preface suggests study by legal counsel to determine the extent of these powers.

A comprehensive program of industrial wastewater regulation is being implemented by the Sanitation Districts of Los Angeles County. Kremer and Dryden (Ref. 36) presents a complete discussion of the program. John D. Parkhurst, Chief Engineer and General Manager, and his staff were particularly helpful in making available information, forms and related publications.

The Sanitation Districts of Los Angeles County require every industrial wastewater discharger to obtain a permit within the next few years. Information required by the Districts in order to obtain a permit is determined by the quantity and quality of wastewater discharged. Large dischargers or dischargers with toxic constituents are required to furnish information descriptive of their processes. Some industrial wastewater constituents will not require regulation. Source control measures include proposed limitations on toxic materials from industrial dischargers. Regulations are being established in two stages to allow an evaluation of their effectiveness. The Districts' Industrial Waste Section includes a group of engineering specialists who are technically capable of working with major industries to obtain compliance with source control regulations. The Districts' enforcement measures are available if a firm proves uncooperative, but the emphasis is always on working with a company to obtain compliance.

Limits should be established by wastewater authorities on wastewater constituents being discharged by system users for the following reasons:

1. To protect the environment from acute or chronic toxic effects.

2. To ensure meeting effluent discharge requirements.

3. To protect employees from injury.

4. To protect facilities from damage.

5. To prevent upsets of the wastewater treatment processes.

6. To reduce presently unrecoverable costs for operation, maintenance or surveillance.

A list of considerations is presented here for legislation by wastewater authorities relating to sewer construction, sewer use and industrial wastewater discharges. Considerations for prohibited waste discharges should include:

A. Gasoline, benzene, naphtha, solvent, fuel oil or any liquid, solid or gas that would cause or tend to cause flammable or explosive conditions to result in the collection and treatment system.

B. Waste containing toxic or poisonous solids, liquids or gases in such quantities that, alone or in combination with other waste substances, may create a hazard for humans, animals or the local environment, interfere detrimentally with wastewater treatment processes, cause a public nuisance, or cause any hazardous condition to occur in the sewerage system.

C. Waste having a pH lower than 4 or having any corrosive or detrimental characteristic that may cause injury to wastewater treatment or maintenance personnel or may cause damage to structures, equipment or other physical facilities of the collection and treatment system.

D. Solids or viscous substances of such size or in such quantity that they may cause obstruction of flow in the sewer or be detrimental to wastewater treatment plant operations. These objectionable substances include, but are not limited to, asphalt, dead animals, offal, ashes, sand, mud, straw, industrial process shavings, metal, glass, rags, feathers, tar, plastics, wood, whole blood, paunch manure, bones, hair and fleshings, entrails, paper dishes, paper cups, milk containers or other similar paper products, either whole or ground.

E. Water added for the purpose of diluting wastes which would otherwise exceed applicable maximum concentration limitations established by regulation.

F. Nonbiodegradable cutting oils, commonly called soluble oil, which form persistent water emulsions.

G. Nonbiodegradable oil, petroleum oil or refined petroleum products above stated amounts.

H. Dispersed biodegradable oils and fats such as lard, tallow or vegetable oil that would tend to cause adverse effects on the sewerage system.

I. Waste with cyanide in excess of stated amounts.

J. Amounts of undissolved or dissolved solids in excess of stated amounts.

K. Strongly odorous waste or waste tending to create odors.

L. Wastes with a pH high enough to cause alkaline incrustations on sewer walls.

M. Substances promoting or causing the production of toxic gases.

N. Waste having a temperature of 120° F or higher.

O. Chlorinated hydrocarbon or organic phosphorus type compounds in excess of stated amounts.

P. Waste containing substances that may precipitate, solidify or become viscous at temperatures between 50° F and 100° F.

Q. Wastes causing excessive discoloration of wastewater or treatment plant effluent.

R. Garbage or waste that is not ground sufficiently to pass through a stated sized screen.

S. Wastes containing excessive quantities of iron, boron, chromium, phenols, plastic resins, copper, nickel, zinc, lead, mercury, cadmium, selenium, arsenic or any other objectionable materials toxic to humans, animals, the local environment or to biological or other wastewater treatment processes or which would result in discharges in excess of effluent requirements.

T. Blow-down or bleed water from cooling towers or other evaporative coolers exceeding one-third of the makeup water.

U. Single pass cooling water.

V. Radioactive material wastes above stated amounts.

W. Recognizable portions of the human anatomy.

Additionally, considerations should be given to provisions for:

- Permits for industrial wastewater discharges.

- Permit suspension to stop a discharge which presents an imminent hazard of potential for plant upset, or effluent discharge violation.

- Handling of hospital wastes.

- Restriction of discharges if sewerage capacity is not available or if quantity or quality of industrial wastewater is unacceptable in the available treatment facility.

- Industrial wastewater treatment surcharge - based on flow, chemical oxygen demand, suspended solids and peak flow.

- Surcharges for roof drainage, yard drainage and lawn sprays.

- Annual treatability charge and charges for unusual industrial wastewaters.

- Pretreatment of industrial wastewaters.

- Industrial wastewater sampling analysis and flow measurements.

- Permits for discharge by truckers to collection or treatment systems.

Conclusion

A number of changes have occurred recently in federal and state laws and policies and local attitudes and concerns regarding treatability and performance requirements, effluent requirements, stream standards, cost allocation, monitoring and enforcement. These changes should prompt a comprehensive review of ordinances regulating industrial wastewater discharges including rate structure. This review should consider the legal powers currently available to wastewater authorities and any new legislative action which may be required. On-going or planned Areawide Waste Treatment Management (208) Programs of the Environmental Protection Agency in all portions of the United States would make the review particularly timely.

APPENDIX K

ADDITIONAL DATA ON PILOT PLANT STUDIES

TABLE K-1. WASTEWATER CHARACTERISTICS DURING PILOT PLANT STUDIES*

PILOT PLANT STUDY NUMBER	RAW WASTEWATER				PRIMARY EFFLUENT	
	FLOW (MGD)	pH (mg/l)	BOD (mg/l)	SS (mg/l)	BOD (mg/l)	SS (mg/l)
1-1	153	7.0	167	207	100	68
1-2	177	7.1	163	176	103	63
2-2	198	7.2	120	139	88	56
3-1	214	7.2	132	162	93	62
4-1	156	7.0	196	236	91	57
5-1	174	7.1	172	167	99	89
5-2	146	6.9	213	228	141	72
6-1	176	7.0	160	180	119	60
7-1+	178	7.0	149	167	106	66
9-1	156	7.0	162	185	121	57
10-1	180	7.0	218**	145	98	54
11-1	151	7.0	171	242	117	68

* Average of 3 days during test period.
\+ Average of 5 days during test period.
** A high value of 357 mg/l was reported during this period.

TABLE K-2 PILOT PLANT STUDY # 1-1, CADMIUM (100 mg/l)

		BOD mg/l		COD mg/l		SS mg/l	
HOURS AFTER SPILL		INFLUENT	EFFLUENT	INFLUENT	EFFLUENT	INFLUENT	EFFLUENT
PRIOR TO SPILL	-2.00	74	10	192	104	47	22
DURING SPILL	0.00	80	9	242	123	44	16
AFTER SPILL	0.25	53	-	250	-	86	-
	2.00	118	10	262	58	68	21
	4.00	110	17	268	94	68	35
	6.00	131	18	276	79	70	23
	10.00	116	20	313	100	62	16
	12.00	112	19	205	104	53	13
	14.00	122	17	232	66	61	16
	16.00	104	15	228	50	53	11
	18.00	89	13	201	62	27	14
	20.00	90	10	181	50	32	12
	22.00	92	12	166	54	37	20
	24.00	111	12	235	58	68	19
	26.00	113	9	247	77	61	21
	28.00	117	10	305	85	94	15
	30.00	97	8	234	85	86	11
	32.00	88	10	235	104	86	11
	34.00	88	9	223	94	60	12
	36.00	97	9	246	90	66	12
	38.00	96	8	246	98	66	11
	40.00	108	9	289	117	50	13
	42.00	92	9	250	141	40	13
	44.00	87	10	231	145	47	13
	46.00	77	9	184	152	52	16
	48.00	103	11	254	152	61	19

TABLE K-3 PILOT PLANT STUDY # 1-2, CADMIUM (500 mg/l)

		BOD mg/l		COD mg/l		SS mg/l		TURBIDITY (HELLIGE)	
HOURS AFTER SPILL		INFLUENT	EFFLUENT	INFLUENT	EFFLUENT	INFLUENT	EFFLUENT	INFLUENT	EFFLUENT
PRIOR TO SPILL	-2.00	88	17	138	20	21	5	39	1
DURING SPILL	0.00	83	19	110	39	7	8	34	5
AFTER SPILL	0.25	44	18	138	79	57	8	36	3
	0.50	44	17	130	53	69	9	46	3
	0.75	69	20	95	77	24	7	36	5
	1.00	74	21	171	79	25	10	36	3
	1.25	94	12	218	71	31	9	41	9
	1.50	102	9	214	83	35	12	51	7
	1.75	102	7	186	71	39	9	49	3
	2.00	104	7	183	103	31	7	46	9
	2.25	102	8	202	71	33	17	41	10
	2.50	100	9	190	87	27	19	59	17
	2.75	100	11	179	87	28	22	41	17
	3.00	106	12	218	87	53	24	65	17
	3.25	101	23	194	75	35	33	41	17
	3.50	96	15	219	113	37	27	49	14
	3.75	100	17	215	101	39	24	46	19
	4.00	110	19	231	105	41	25	68	21
	8.00	123	36	243	93	39	25	62	25
	12.00	120	40	223	77	37	21	54	21
	16.00	102	49	170	93	40	28	65	25
	20.00	98	68	154	79	19	22	44	25
	24.00	112	31	138	71	27	17	41	19
	28.00	106	46	170	83	39	27	49	19
	32.00	94	53	190	81	59	20	70	17
	36.00	110	52	210	89	39	20	56	14
	40.00	102	37	215	85	45	18	56	17
	44.00	162	42	191	55	35	15	51	17
	48.00	81	25	108	40	26	10	31	7

TABLE K-4 PILOT PLANT STUDY # 2-2, SULFURIC ACID (.84 ml/l)

	BOD mg/l		SS mg/l		TURBIDITY (HELLIGE)		ALKALINITY mg/l	
HOURS AFTER SPILL	INFLUENT	EFFLUENT	INFLUENT	EFFLUENT	INFLUENT	EFFLUENT	INFLUENT	EFFLUENT
PRIOR TO SPILL								
(2.0-1.5)	89	19	70	17	54	5	116	132
(1.5-1.0)	85	26	58	18	51	5	128	132
(1.0-0.5)	85	17	56	14	51	5	120	128
(0.5-0.0)	80	18	44	14	34	5	120	124
DURING SPILL								
0.5-0.0	34	18	112	16	44	3	1600*	124
AFTER SPILL								
0.5-1.0	5	14	86	14	39	10	1940*	112
1.0-1.5	82	13	64	15	51	9	92	80
1.5-2.0	87	17	58	21	44	12	116	24
2.0-2.5	92	17	44	24	44	21	120	136*
2.5-3.0	102	26	82	30	39	25	124	200*
3.0-3.5	103	34	62	35	46	27	124	192*
3.5-4.0	105	42	62	86	36	56	124	144*
4.0-4.5	105	46	54	80	41	59	128	120*
4.5-5.0	106	46	78	70	49	49	132	64*
5.0-13.0	118	23	62	23	56	17	132	116
13.0-21.0	99	12	68	28	68	19	116	88
21.0-29.0	51	9	66	17	62	9	80	104
29.0-37.0	62	5	58	13	65	14	88	84
37.0-45.0	77	8	46	26	41	17	116	100
45.0-53.0	72	6	44	24	41	9	120	116

* Acidity

TABLE K-5. PILOT PLANT STUDY # 3-1, SODIUM HYDROXIDE (2.4 g/l)

	BOD mg/l		SS mg/l		TURBIDITY (HELLIGE)		ALKALINITY mg/l	
HOURS AFTER SPILL	INFLUENT	EFFLUENT	INFLUENT	EFFLUENT	INFLUENT	EFFLUENT	INFLUENT	EFFLUENT
PRIOR TO SPILL								
(2.0-1.5)	71	18	50	10	46	1	124	124
(1.5-1.0)	60	18	46	22	44	5	120	120
(1.0-0.5)	62	23	58	12	44	1	120	120
(0.5-0.0)	59	18	34	14	36	1	116	120
DURING SPILL								
(0.0-0.5)	7	17	560	13	136	5	5824	116
AFTER SPILL								
0.5-1.0	5	18	356	11	156	5	5824	136
0.0-1.5	89	34	156	18	68	14	152	256
1.5-2.0	77	2+, 84*	70	40	59	25	128	512
2.0-2.5	80	3+, 91*	68	38	41	25	132	860
2.5-3.0	90	3+, 91*	86	47	44	21	132	1044
3.0-3.5	107	2+, 92*	84	52	54	27	140	992
3.5-4.0	108	3+, 89*	52	54	54	29	136	860
4.0-4.5	82	18+, 90*	78	54	46	31	132	728
4.5-5.0	--	--	60	244	46	29	132	572
5.0-9.0	136	94+, 95*	104	84	91	65	136	288
9.0-13.0	109	22*	76	78	62	73	128	200
13.0-21.0	76	57	68	58	62	49	100	164
21.0-29.0	77	25	54	20	49	19	112	144
29.0-37.0	108	23	60	29	59	21	124	136
37.0-45.0	95	26	66	28	54	19	120	128
45.0-53.0	85	16	60	26	46	17	92	108

+ Unneutralized sample
* Neutralized sample

TABLE K-6 PILOT PLANT STUDY # 4-1, Methanol (1000 mg/l)

	BOD mg/l		SS mg/l		TURBIDITY	
HOURS AFTER SPILL	INFLUENT	EFFLUENT	INFLUENT	EFFLUENT	INFLUENT	EFFLUENT
PRIOR TO SPILL						
(2.0-1.5)	114	23	64	36	65	23
(1.5-1.0)	104	25	80	36	65	25
(1.0-0.5)	-	23	-	28	-	19
(0.5-0.0)	98	25	74	30	56	17
DURING SPILL						
0.0-0.5	1065	26	70	26	56	19
AFTER SPILL						
0.5-1.0	915	29	69	31	44	23
1.0-1.5	102	69	67	31	49	27
1.5-2.0	102	120	67	30	51	19
2.0-2.5	96	177	60	34	54	21
2.5-3.0	104	209	65	28	46	19
3.0-3.5	117	216	60	29	46	14
3.5-4.0	126	216	65	21	59	21
4.0-4.5	126	200	70	25	56	19
4.5-5.0	123	174	69	26	56	19
5.0-9.0	126	87	97	36	59	12
9.0-13.0	141	44	96	36	59	14
13.0-21.0	126	37	80	31	59	14
21.0-29.0	105	22	74	28	54	17
29.0-37.0	72	17	108	18	51	14
37.0-45.0	68	25	104	39	76	12
45.0-53.0	30	19	85	36	51	14

TABLE K-7. PILOT PLANT STUDY # 5-1, PHENOL

	BOD mg/l		SS mg/l		TURBIDITY (HELLIGE)		PHENOL mg/l	
HOURS AFTER SPILL	INFLUENT	EFFLUENT	INFLUENT	EFFLUENT	INFLUENT	EFFLUENT	INFLUENT	EFFLUENT
PRIOR TO SPILL								
(2.0-1.5)	102	20	48	6	79	5	0.017	0.003
(1.5-1.0)	91	20	58	5	59	3	0.024	0.005
(1.0-0.5)	82	20	38	11	51	9	0.011	0.003
(0.5-0.0)	80	19	36	9	54	3	0.020	0.007
DURING SPILL								
0.0-0.5	1140	20	34	10	56	1	600.0	0.002
AFTER SPILL								
0.5-1.0	102	9	126	15	44	1	1.835	0.612
1.0-1.5	90	31	36	9	44	5	0.016	3.930
1.5-2.0	102	--	34	6	56	5	0.105	10.50
2.0-2.5	150	--	36	5	34	5	0.035	19.70
2.5-3.0	84	--	42	7	41	5	0.034	27.50
3.0-3.5	78	--	46	4	41	1	0.033	0.229
3.5-4.0	84	--	44	13	51	7	0.037	0.252
4.0-4.5	90	76	38	9	44	7	0.024	0.184
4.5-5.0	102	58	38	10	54	5	0.013	0.092
5.0-9.0	105	34	68	27	49	7	0.015	0.803
9.0-13.0	107	24	62	15	54	5	0.037	0.037
13.0-21.0	106	22	68	12	46	3	0.013	0.008
21.0-29.0	110	22	66	18	65	3	0.015	0.018
29.0-37.0	100	10	78	11	56	5	0.022	0.022
37.0-45.0	92	20	72	29	54	7	0.032	0.010
45.0-53.0	100	20	60	17	65	7	0.023	0.008

TABLE K-8 PILOT PLANT STUDY # 5-2, PHENOL

	SS mg/l		TURBIDITY (HELLIGE)		PHENOL mg/l	
HOURS AFTER SPILL	INFLUENT	EFFLUENT	INFLUENT	EFFLUENT	INFLUENT	EFFLUENT
PRIOR TO SPILL -2	84	13	44	7	0.057	0.007
-1.5	66	10	44	7	0.051	0.005
-1	56	27	44	10	0.046	0.009
-0.5	56	30	44	7	0.076	0.005
AFTER SPILL .5	68	35	44	10	596.4	0.005
1	54	40	44	17	2.019	0.002
1.5	54	56	39	23	0.711	1.606
2	50	62	39	36	0.619	7.340
2.5	60	64	31	29	0.184	16.40
3	62	60	44	23	0.135	42.44
3.5	62	56	49	17	0.115	27.24
4	60	62	44	27	0.193	27.96
4.5	62	68	46	23	0.083	26.15
5	66	68	49	21	0.092	22.93
9	90	74	46	31	0.080	3.211
13	66	64	51	31	0.115	0.029
21	72	62	54	27	0.057	0.017
29	60	40	56	23	0.048	0.014
37	98	16	70	14	0.087	0.310
43	118	13	76	12	0.053	0.009
51	92	24	56	14	0.046	0.007

TABLE K-9 PILOT PLANT STUDY # 6-1, AMMONIUM CHLORIDE (500 mg/l)

	COD mg/l		SS mg/l		TURBIDITY		CHLORIDE mg/l	
HOURS AFTER SPILL	INFLUENT	EFFLUENT	INFLUENT	EFFLUENT	INFLUENT	EFFLUENT	INFLUENT	EFFLUENT
PRIOR TO SPILL -2	216	39	64	10	62	5	97	102
-1.5	220	39	64	10	46	3	92	97
-1	192	55	58	10	54	3	102	92
- .5	192	27	62	9	46	1	102	97
AFTER SPILL .5	180	50	46	9	46	5	490	97
1	174	47	54	9	46	3	490	108
1.5	236	31	44	10	41	5	113	113
2	151	43	48	11	39	5	97	124
2.5	174	39	50	14	44	3	102	162
3	209	16	48	18	54	7	102	118
3.5	183	28	56	26	59	10	102	118
4	186	60	54	33	41	12	113	162
4.5	198	52	58	31	46	7	113	275
5	206	48	54	32	49	12	108	151
9	206	60	68	30	54	12	108	129
13	139	35	58	27	68	7	92	108
21	222	40	64	14	49	3	92	97
29	171	32	76	12	56	1	97	92
37	242	32	86	7	82	9	102	108
43	214	40	74	15	51	3	92	97
51	193	28	80	13	59	3	92	92

TABLE K-10 PILOT PLANT STUDY # 7-1, COPPER (100 mg/l)

	COD mg/l		SS mg/l		TURBIDITY	
HOURS AFTER SPILL	INFLUENT	EFFLUENT	INFLUENT	EFFLUENT	INFLUENT	EFFLUENT
PRIOR TO SPILL						
2.0 - 1.5	148	36	60	7	31	7
1.5 - 1.0	164	48	40	9	31	5
1.0 - 0.5	164	60	34	17	31	5
0.5 - 0.0	176	28	34	10	31	3
DURING SPILL						
0.0 - 0.5	204	32	140	10	116	3
AFTER SPILL						
0.5 - 1.0	163	24	46	16	39	3
1.0 - 1.5	190	32	38	13	39	3
1.5 - 2.0	179	44	36	19	29	9
2.0 - 2.5	167	52	46	26	29	10
2.5 - 3.0	194	63	42	28	25	23
3.0 - 3.5	152	48	46	26	41	29
3.5 - 4.0	176	72	48	29	49	25
4.0 - 4-5	156	80	56	31	54	25
4.5 - 5.0	164	84	56	18	39	19
5.0 - 9.0	152	64	38	39	41	27
9.0 - 13.0	160	56	48	36	41	17
13.0 - 21.0	156	16	52	27	39	10
21.0 - 29.0	98	20	44	17	36	12
29.0 - 37.0	147	16	66	21	36	7
37.0 - 45.0	143	32	44	11	36	7
45.0 - 53.0	138	47	64	15	36	5
53.0 - 61.0	174	136	76	21	54	7
61.0 - 69.0	166	59	64	14	51	5
69.0 - 77.0	158	51	60	15	46	5
77.0 - 85.0	182	51	68	13	51	7
85.0 - 93.0	141	27	70	10	49	5
93.0 -101.0	109	27	56	16	46	9
101.0 -109.0	141	31	54	16	39	7

TABLE K-11 PILOT PLANT STUDY # 9-1, PICKLE LIQUOR (5.6 ml/l INFLUENT)

	COD mg/l		SS mg/l		TURBIDITY (HELLIGE)		ALKALINITY mg/l	
HOURS AFTER SPILL	INFLUENT	EFFLUENT	INFLUENT	EFFLUENT	INFLUENT	EFFLUENT	INFLUENT	EFFLUENT
PRIOR TO SPILL -2	171	32	70	10	62	5	132	104
-1.5	155	36	43	8	62	5	144	104
-1	159	32	44	13	62	5	144	104
- .5	147	36	40	9	62	5	144	104
AFTER SPILL 0.5	159	20	56	12	54	5	60	96
1	163	24	52	9	51	5	180*	80
1.5	179	20	69	10	41	5	128	72
2	163	32	48	10	44	5	136	68
2.5	168	28	51	13	54	5	152	52
3	164	28	53	12	54	7	148	44
3.5	160	28	51	13	54	9	152	44
4	180	24	55	13	49	9	152	40
4.5	188	36	59	16	56	10	160	40
5	192	40	60	15	56	12	168	44
9	188	24	65	22	41	10	152	56
13	176	32	68	19	41	10	152	56
21	150	24	84	16	56	10	152	80
29	152	32	61	17	56	10	148	80
37	216	40	100	24	41	7	156	80
43	184	48	122	14	39	9	140	88
51	148	36	48	27	41	10	144	72

* Acidity

TABLE K-12 PILOT PLANT STUDY # 10-1, FUEL OIL (8ml/l INFLUENT)

	SS mg/l		TURBIDITY (HELLIGE)		GREASE mg/l	
HOURS AFTER SPILL	INFLUENT	EFFLUENT	INFLUENT	EFFLUENT	INFLUENT	EFFLUENT
PRIOR TO SPILL -2	61	3	68	9	-	-
-1.5	59	30	68	9	-	-
-1	55	8	65	9	-	-
-0.5	51	3	44	9	61	36
AFTER SPILL 0.5	70	6	-	9	1684	34
1	85	6	-	9	2110	29
1.5	39	10	-	17	47	40
2	36	14	56	14	30	100
2.5	48	19	44	27	38	108
3	57	23	44	23	53	162
3.5	48	48	54	34	48	197
4	44	56	44	21	50	168
4.5	49	29	44	21	56	194
5	53	23	44	21	55	157
9	60	29	56	36	53	124
13	49	36	56	34	53	43
21	48	40	54	31	51	41
29	33	34	54	34	38	38
37	57	33	56	34	45	79
43	67	34	54	54	12	-
51	59	55	46	46	29	66

TABLE K-13 PILOT PLANT STUDY # 11-1, PERCHLOROETHYLENE (1600 mg/l)

	BOD mg/l		COD mg/l		TURBIDITY (HELLIGE)	
HOURS AFTER SPILL	INFLUENT	EFFLUENT	INFLUENT	EFFLUENT	INFLUENT	EFFLUENT
PRIOR TO SPILL -2	98	35	160	35	56	10
-1.5	96	33	43	156	56	10
-1	93	32	171	43	56	10
-0.5	79	34	148	31	56	10
AFTER SPILL 0.5	38	32	222	47	266	10
1	36	31	130	32	260	10
1.5	50	29	146	28	133	10
2	70	28	130	40	49	10
2.5	80	31	134	40	44	10
3	80	28	154	43	41	10
3.5	90	32	142	40	56	10
4	99	29	154	36	56	10
4.5	87	34	158	43	56	10
5	100	43	162	36	56	10
9	100	46	170	28	44	10
13	118	46	174	28	44	10
21	134	50	206	43	44	10
29	116	81	185	91	44	10
37	117	71	189	49	44	10
43	120	74	192	45	46	10
51	87	57	172	60	46	10

APPENDIX L

GLOSSARY OF ABBREVIATIONS

ALCOSAN	-	Allegheny County Sanitary Authority
BOD	-	Biochemical Oxygen Demand
CHRIS	-	Chemical Hazards Response Information System
COD	-	Chemical Oxygen Demand
DOT	-	Department of Transportation
EPA	-	Environmental Protection Agency
FWPCAA	-	Federal Water Pollution Control Act Amendments
GPD	-	Gallons Per Day
HM	-	Hazardous Materials
HMS	-	Hazardous Material Studies
MCA	-	Manufacturing Chemists Association
MLSS	-	Mixed Liquor Suspended Solids
NPDES	-	National Pollutant Discharge Elimination System
OHMTADS	-	Oil and Hazardous Materials Technical Assistance Data System
ORSANCO	-	Ohio River Sanitation Commission
SIC	-	Standard Industrial Classification
SS	-	Suspended Solids
SVI	-	Sludge Volume Index

CONVERSION TABLE

METRIC TO U.S. MEASURE

MILLIGRAM (mg)	=	0.015 grain
GRAM (gm or g)	=	0.035 ounce (Avoirdupois)
LITER (l)	=	1.057 quarts = 0.264 gallon
METER (m)	=	39.37 inches
KILOMETER (km)	=	0.62 miles
MILLILITER (ml)	=	0.27 fluid dram

REFERENCES

1. Dawson, G.W., A. J. Shuckrow, and W.H. Swift. Control of Spillage of Hazardous Polluting Substances. Battelle Memorial Institute Pacific Northwest Laboratories (Richland, Washington). FWQA Report 15090 FOZ. Department of the Interior. November 1970. (NTIS-PB-197596)

2. O'Driscoll, J.J. Spill Prevention and Control in the Railroad Industry. In: Proceedings of the 1974 National Conference on Control of Hazardous Materials, New York, American Institute of Chemical Engineers, August 1974. p. 141-142.

3. A Contingency Plan for Hazardous Material Incidents in Allegheny County. Program in Engineering and Public Affairs. Pittsburgh, Carnegie Institute of Technology, School of Urban and Public Affairs, Carnegie-Mellon University. December 12, 1974.

4. Pajak, A.P., E.J. Martin, G.A. Brinsko and F. J. Erny. Effects of Hazardous Material Spills on Biological Treatment Processes. EPA-600/2-77-239, U.S. Environmental Protection Agency, Cincinnati, Ohio, 1977. 202 pp.

5. Mitchell, R.C., J.J. Vrolyk, R.W. Melvold, and I. Wilder. System for Plugging Leaks from Ruptured Containers. In: Proceedings of the 1974 National Conference on Control of Hazardous Material Spills. New York, American Institute of Chemical Engineers, August, 1974. p. 212-216. (Also see EPA-600/2-76-300).

6. Hiltz, R.H., M.D. Marshall, J.B. Friel. The Physical Containment of Land Spills by a Foam Diking System. In: Proceedings of the 1972 National Conference on Control of Hazardous Material Spills. Washington, D.C., Graphics Management Corporation, March 1972. p. 85-91. (Also see EPA-RZ-73-185 and NTIS-PB-221493).

7. Hiltz, R.H., F. Roelich, and J. Brugger. Emergency Collection System for Spilled Hazardous Materials. In: Proceedings of the 1974 National Conference on Control of Hazardous Material Spills. New York, American Institute of Chemical Engineers, August 1974. p. 208-211. (Also see EPA-600/2-77-162).

8. Rich, C.R., T.G. Pantazelos, and R.E. Sanders. The Short Contact Time of Physical Chemical Treatment Systems for Hazardous Material Contaminated Waters. In: Proceedings of the 1974 National Conference on Control of Hazardous Material Spills. New York, American Institute of Chemical Engineers, August 1974. p. 194-196. (Also see EPA-670/2-75-004 and NTIS PB-241080).

9. Mason, T.G., N.K. Gupta, and R.C. Scholz. A Mobile Multi-Purpose Treatment System for Processing Hazardous Material Contaminated Waters. In: Proceedings of the 1972 National Conference on Control of Hazardous Material Spills. Washington, D.C., Graphics Management Corporation, March 1972. p. 153-156. (Also see EPA-600/2-76-109 and NTIS PB-256707).

10. Council on Environmental Quality, National Oil and Hazardous Substances Pollution Contingency Plan. 40 CFR 1510. August 13, 1973.

11. Contingency Plan for Spills of Oil and Other Hazardous Materials for Inland Waters of Region III. Environmental Protection Agency, Region III, Office of Water Programs, Philadelphia, Pennsylvania. October 1971.

12. Sub-regional Contingency Plan for Inland Waters of the Commonwealth of Pennsylvania, Environmental Protection Agency, Region III, Office of Water Programs, Philadelphia, Pennsylvania. October 1971.

13. Theis, J.M., et al. An Industry Distribution Emergency Response System. In: Proceedings of the 1974 National Conference on Control of Hazardous Material Spills. New York, American Institute of Chemical Engineers, August 1974. p. 46-48.

14. Jensen, R.A. A Spill Control Within A Chemical Plant. In: Proceedings of the 1974 National Conference on Control of Hazardous Material Spills. New York, American Institute of Chemical Engineers, August 1974. p. 65-66.

15. Unpublished Document. Agreement with TRIAD's Industry Preparedness Committee, Greater Pittsburgh Area. Three Rivers Improvement and Development Corporations, Pittsburgh, Pennsylvania.

16. Pontius, P.W. Containment and Disposal of Product from Leaking Drums in Transit. In: Proceedings of the 1974 National Conference on Control of Hazardous Material Spills. New York, American Institute of Chemical Engineers, August 1974. p. 217-218.

17. ORSANCO publication, The ORSANCO Robot Monitoring System. Cincinnati, Ohio.

18. ORSANCO publication, ORSANCO Stream-Quality Criteria and Minimum Conditions, Cincinnati, Ohio. May 15, 1970.

19. Conference in the Matter of Pollution of the Interstate Waters of the Ohio River and Its Tributaries in the Pittsburgh, Pennsylvania Area Involving Pennsylvania, Ohio and West Virginia. Pittsburgh, Pennsylvania. September 30, 1971.

20. American Public Health Association. Standard Methods for the Examination of Water and Wastewater. New York, American Public Health Association, Inc., 13th edition, 1970.

21. Industrial Waste Survey for Department of Public Utilities Clean Water Task Force Cleveland, Ohio. Dalton, Dalton and Little, Consulting Engineers, Cleveland, Ohio, 1969.

22. Analysis of Industrial Waste Surcharge Requirements of the Metropolitan Sanitary District of Greater Chicago. Leon W. Weinberger and Associates, Washington, DC, August 1971.

23. Office of Management and Budget. Standard Industrial Classification Manual. U.S. Government Printing Office, Washington, DC, 1972.

24. Environmental Protection Agency, Methods for Chemical Analysis of Water and Wastes, 1971, No. 16020 07/71.

25. Perkin - Elmer Corporation, Analytical Methods for Atomic Absorption Spectrophotometry, No. 303-0152, The Perkin - Elmer Corp., Norwalk, Connecticut, March 1971.

26. Proposed Collection and Treatment - Municipal Sewage and Industrial Wastes - Allegheny County Sanitary Authority, January 1948.

27. Sewer Service Charges and Surcharges - Joseph J. Olliffe, WPCF, 35, 5, 607, (May 1963)

28. Allegheny County Sanitary Authority - Sewer Rates and Charges - Effective February 1, 1971 (by Resolution adopted November 12, 1970).

29. Letter - Resume of Rate Change Computations made in October 1970 - Metcalf & Eddy, Inc., to Allegheny County Sewer Authority, June 6, 1974.

30. Financing and Charges for Wastewater Systems - A Joint Committee Report - American Public Works Association, American Society of Civil Engineers, and Water Pollution Control Federation, 1973.

31. A Survey of Industrial Waste Treatment Costs and Charges - Stone and Schmidt - Proceedings of the 23rd Industrial Waste Conference, May 1968 - p. 49 - Purdue University Engineering Extension Series No. 132.

32. Environmental Protection Agency - Grants for Construction of Treatment Works - User Charges and Industrial Cost Recovery - Federal Register, Volume 38, No. 161, August 21, 1973.

33. Private Communication - Industrial Cost Recovery Guidelines - Virginia Water Resources Research Center and the Virginia State Water Control Board.

34. Bay Area Develops Model Industrial Waste Ordinance - Paul C. Soltow, Jr. - Industrial Wastes 21 3, 6 May/June 1975.

35. Standard Industrial Classification Manual - 1972, Executive Office of the President - Office of Management and Budget.

36. Source Control of Industrial Wastewater - Jay G. Kremer and Franklin D. Dryden of the Sanitation Districts of Los Angeles County - Prepublication copy.

37. Public Law, 92-500, Title I - Research and Related Programs, Sec. 101(a)(3).

38. Public Law, 92-500, Title I - Research and Related Programs, Secs. 304, 307 and 311.

TECHNICAL REPORT DATA
(Please read Instructions on the reverse before completing)

1. REPORT NO. EPA-600/2-80-108	2.	3. RECIPIENT'S ACCESSION NO.
4. TITLE AND SUBTITLE Hazardous Material Spills and Responses for Municipalities		5. REPORT DATE July 1980
		6. PERFORMING ORGANIZATION CODE
7. AUTHOR(S) George A. Brinsko, Frederick J. Erny, Edward J. Martin, Andrew P. Pajak, David M. Jordan		8. PERFORMING ORGANIZATION REPORT NO. Also see EPA-600/2-77-239
9. PERFORMING ORGANIZATION NAME AND ADDRESS Allegheny County Sanitary Authority (ALCOSAN) 3300 Preble Avenue Pittsburgh, Pennsylvania 15233		10. PROGRAM ELEMENT NO. 1BB610
		11. CONTRACT/GRANT NO. S-801123
12. SPONSORING AGENCY NAME AND ADDRESS Industrial Environmental Research Laboratory Office of Research and Development U.S. Environmental Protection Agency Cincinnati, Ohio 45268		13. TYPE OF REPORT AND PERIOD COVERED Final Report
		14. SPONSORING AGENCY CODE EPA/600/12

15. SUPPLEMENTARY NOTES
This report was prepared in part by Environmental Quality Systems, Inc., 1160 Rockville Pike, Rockville, MD 20852 under a subcontract with the Grantee, ALCOSAN

16. ABSTRACT
This project deals with the Allegheny County Sanitary Authority (ALCOSAN) efforts to develop and implement a comprehensive program to minimize potential adverse effects of hazardous material spills on the ALCOSAN wastewater collection and treatment system. Principal areas reported are: (1) a compendium of the effects that hazardous materials can have on secondary treatment (2) inventory of hazardous materials stored within the ALCOSAN service area (3) evaluation of selected hazardous materials in a pilot plant simulating the effects of spills on treatment plant performance (4) study of the potential for a monitoring and surveillance system at the head-end of the plant and key locations within the collection systems (5) development of a contingency plan to initiate countermeasures in the event of a spill (6) investigation of surcharge, financing, and legislative programs. The pilot plant results showed that the hazardous materials had minor adverse effects upon the plant operation. However, operational problems and degradation of effluent quality illustrate the potential adverse effects of hazardous materials upon the operation of the full-scale facility.

17. KEY WORDS AND DOCUMENT ANALYSIS

a. DESCRIPTORS	b. IDENTIFIERS/OPEN ENDED TERMS	c. COSATI Field/Group
Hazardous materials spills, activated sludge, pilot plant, (heavy metals, organics, acids/bases, salts), sewage treatment, municipal Industrial Wastes Biodegradation Sewage composition/flows Sewage composition monitoring	Effect of, and plant response to, chemical spills on sewage treatment operation. Hazardous spill contingency planning. NPDES violations: upsets due to chemical spills.	68C

18. DISTRIBUTION STATEMENT RELEASE TO PUBLIC	19. SECURITY CLASS (This Report) UNCLASSIFIED	21. NO. OF PAGES 285
	20. SECURITY CLASS (This page) UNCLASSIFIED	22. PRICE

EPA Form 2220-1 (9-73)

*USGPO: 1980 — 657-146/0502