FEDERAL WATER POLLUTION CONTROL ADMINISTRATION
NORTHWEST REGION, PACIFIC NORTHWEST WATER LABORATORY

HOUSEBOAT WASTE CHARACTERISTICS AND TREATMENT

APRIL 1968

HOUSEBOAT WASTE
CHARACTERISTICS AND TREATMENT

Prepared by

B.D. Clark

Technical Projects Branch

Report No. PR-6

U. S. Department of the Interior
Federal Water Pollution Control Administration
Northwest Region
Pacific Northwest Water Laboratory
Corvallis, Oregon

September 1967

ACKNOWLEDGMENTS

The assistance of the following groups and individuals is gratefully acknowledged:

1. Mr. Terry Pettus and Mr. King of the Seattle Floating Homes Association
2. Mr. Ray Mills
3. Mr. Ray DeFir
4. Mr. Alex Gilbert, City of Portland Water Bureau
5. Mr. Ralph Baggerly, Hershey Sparling Co.
6. Mr. Fred Repp, Master Equipment Co.

DEFINITIONS

BOD_5 -- Five day, 20°C biochemical oxygen demand

COD -- Chemical oxygen demand

Tot. Kjeld. Nit. -- Total Kjeldahl nitrogen which includes all organic and ammonia nitrogen as N

Tot. PO_4 -- Total phosphate as PO_4

Ortho PO_4 -- Soluble, ortho phosphate as PO_4

TGO -- Total grease and oil

TS -- Total solids

TVS -- Total volatile solids

SS -- Suspended solids

VSS -- Volatile suspended solids

gpd -- gallons per day

gpcd -- gallons per capita per day

TABLE OF CONTENTS

		Page
I.	INTRODUCTION	
	A. Authority	1
	B. Objectives and Scope	1
	C. Study Area	1
II.	SUMMARY OF FINDINGS AND CONCLUSIONS	
	A. Findings	2
	B. Conclusions	3
III.	WASTE QUALITY CHARACTERISTICS	
	A. Location	5
	B. Methods	7
	C. Results	10
	D. Discussion	10
IV.	WASTE QUANTITY CHARACTERISTICS	
	A. Location	18
	B. Methods	19
	C. Results	19
	D. Discussion	21
V.	TREATMENT OF HOUSEBOAT WASTES	26
VI.	BIBLIOGRAPHY	33

LIST OF TABLES

No.		Page
1	Moorage Inventory Results	6
2	Average Daily Houseboat Wastewater Characteristics	11
3	Per capita Houseboat Waste	12
4	Variation in Daily Houseboat Wastewater Quality	13
5	Ratio of Per capita Land Residential Waste to Per capita Houseboat Waste	16
6	Houseboat and Moorage Water Use	20
7	Houseboat Moorage No. 1 Water Use	22
8	Houseboat Moorage No. 2 Water Use	23
9	Houseboat Moorage No. 3 Water Use	24

LIST OF FIGURES

No.		Page
1	Sampling Apparatus	9
2	Pneumatic Ejector Test Assembly	27

I. INTRODUCTION

A. Authority

The Pacific Northwest Water Laboratory of the Federal Water Pollution Control Administration, Northwest Region, was requested by the Oregon State Sanitary Authority, letter dated January 19, 1966, to conduct a study on houseboat wastes leading to methods for their collection and treatment.

The Federal Water Pollution Control Act, P.L. 84-660, as amended, provides Federal authorization for State assistance studies.

B. Objectives and Scope

Houseboat and moorage wastewaters are essentially domestic in nature and as such will require adequate treatment prior to discharge to any watercourse. In order that treatment facilities may be properly designed for strengths and flows encountered from moorages and houseboats, two studies were conducted to determine the average houseboat wastewater strength and volume and the waste flow characteristics from moorages or groups of houseboats. On this basis, criteria are suggested for consideration in the design of treatment and pumping facilities for wastes from individual houseboats and moorages.

C. Study Area

The study area for this report included the States of Oregon and Washington. Two houseboats were sampled continuously, each for a two-week period, to determine wastewater characteristics.

The average moorage wastewater quantity was determined by recording water use continuously at three moorages in the Portland, Oregon, area.

II. SUMMARY OF FINDINGS AND CONCLUSIONS

A. Findings

1. Houseboat wastes were found to be more concentrated than normal municipal sewage but less concentrated than the wastes from individual land residences with two or three children.

2. The average per capita BOD_5 and per capita SS in the houseboat wastes is 43 $\pm$ 3 (95% confidence limits) gm/day and 34 $\pm$ 7.1 gm/day, respectively. Both of these values are significantly less than values normally used in the design of wastewater treatment facilities. Average per capita BOD_5 and SS reported for several land residences, each with several children, more closely agree with standard design values.

3. The average per capita TGO in the houseboat waste is 17.4 $\pm$ 7.7 gm/day. This value is higher than normal domestic sewage and waste from the average land residence.

4. Maximum houseboat wastewater concentrations occur between the hours of 2100 to 2300 and 0700 to 0900. These periods account for 30 to 43 percent of the total daily waste.

5. The average wastewater contribution from houseboats was approximately 62 gallons per capita per day (gpcd).

6. The minimum 3-hour waste flow for an individual houseboat is 0 gpcd while that for a moorage varies from 3 to 15 gpcd.

7. The maximum 3-hour flow noted for an individual houseboat was 700 gpcd. For a moorage with 18 houseboats it was approximately 275 gpcd.

8. The waste discharge pattern from houseboats is similar to that generally reported for municipal wastes with peaks occurring at mealtimes and little use during bedtime hours.

9. Approximately 87 percent of the houseboat waste occurs in an 18-hour period from 0600 to 2400, giving an average daily 18-hour per capita flow of approximately 75 gpd.

B. Conclusions

1. Small submersible centrifugal pumps preceded by maceration will pump houseboat wastes without problems when occupants are informed that rags and stringy material should not be discharged to the sewer.

2. A small pneumatic ejector for use on an individual houseboat was designed and tested on a houseboat. The unit was found to operate satisfactorily without difficulties for a period of approximately 8 weeks.

3. Small extended aeration biological treatment units offer a practical means of economically providing secondary treatment for houseboat wastes. A study made in Canada indicates the applicability of these units for individual home application.

4. Use of conventional design values of 0.17 pounds (77 gm) of BOD_5 and 0.2 pounds (90 gm) of SS per capita per day would provide a conservative design of biological treatment facilities for houseboat and moorage wastes.

5. The average daily 18-hour per capita flow of 75 gpd with a minimum retention time of 24 hours should be used in hydraulically

sizing treatment aeration tanks. A maximum 3-hour flow rate of 700 gpcd should be used to size settling compartments and inlet-outlet devices.

6. The alkalinity contributed by the houseboat may be insufficient to maintain optimum pH conditions in aerobic biological treatment units. Addition of a buffering solution may be necessary.

III. WASTE QUALITY CHARACTERISTICS

A. Location

In order to select representative houseboats for sampling, it was first necessary to characterize houseboats on the basis of number of people per boat, typical numbers of fixtures, and living habits. To do this a survey was conducted at 10 moorages, 9 in the Portland, Oregon, area and 1 in Seattle, Washington. The survey included 308 houseboats or approximately 25 percent of all houseboats in the States of Oregon and Washington. Results of the survey indicated an average population of less than 2 persons per houseboat and slightly over 1 bedroom per houseboat. Approximately half the houseboats have washing machines and less than 20 percent have dishwashers. Only one houseboat was found with a garbage disposal unit. The average number of fixture-units per houseboat, based on the National Plumbing Code[1] designation is eleven.

Regarding the resident population living on houseboats, it was found that most residents could be grouped in one of two categories: (1) an older group, generally retired, that occupied the houseboat nearly full time, and (2) a working group composed of childless couples and single men and women. Table 1 gives the results of the survey.

Two houseboats, both with complete plumbing systems suitable for installing sampling equipment to determine waste characteristics, were selected in Seattle, Washington. The Floating Homes Association

Table 1

Moorage Inventory Results

MOORAGE	DATE OF SURVEY	HOUSEBOATS	PEOPLE	BATHROOMS	WASHING MACHINES	DISH-WASHERS	GARBAGE DISPOSALS
PORTLAND, OREGON							
Oregon Yacht Club	8/66	31	68	31	30	15	0
Suttle Road Moorage	11/66	10	16	10	4	0	0
Sauvies Island Moorage	8/66	40	60	42	10	2	1
Ski Dock Moorage	11/66	22	40	22	1	0	0
Hayden Island Moorage	9/66	103	185	105	64	28	0
Wuerth Moorage	11/66	14	29	28	7	2	0
Waterly Lane	8/66	18	31	25	10	7	0
Portland Rowing Club	8/66	17	35	20	6	0	0
Standard Moorage	10/66	2	6	3	0	1	1
SEATTLE, WASHINGTON							
Freeman's Moorage	10/66	51	103	52	17	0	0
TOTALS		308	573	338	159	55	2

of Seattle made the arrangements with owners of the two homes to cooperate in the study.

Houseboat No. 1 was owned by an older couple who spent most of their time aboard their home. The wife was home during the entire period of this study while the husband was generally away during the middle of each weekday. Water-using fixtures included a kitchen sink, 1 bathroom with water closet, sink and combination tub and shower, and a clothes washer. The home was sampled by collecting daily composite samples during the periods 2100 to 0900; 0900 to 1300; 1300 to 1700; and 1700 to 2100. The water supply to the home was sampled daily at 1300. Sampling began at this home on April 28, 1967, and was completed on May 13, 1967.

Houseboat No. 2 was owned by a working couple. Both were away from the houseboat during the work-week from 0800 to 1700 but home on weekends. Water-using fixtures included the same as those for Houseboat No. 1, plus a dishwasher used approximately once every 3 days. This houseboat was sampled by collecting composite samples three times daily during the week and five times daily on weekends. Sampling began on May 16, 1967, and was completed on May 30, 1967.

B. Methods

Composite samples were collected from both houseboats by attaching a sump and pump to the houseboat sewer and pumping all wastes to a storage tank. Each time a sample was collected, the contents of the storage tank were measured, mixed, a sample collected, and the

tank then drained and rinsed out to receive the next sample. To obtain a representative, well-mixed sample, the raw waste passed through a food grinder which was activated by a flow switch in the sewer. A 5/8-inch water meter was attached to the water line serving each houseboat and read each time a sample was collected.

Figure 1 illustrates the sampling equipment used, and the wiring diagram for the food grinder flow switch.

Samples were stored in an ice chest until the last daily sample was collected. They were then delivered to the local bus depot where they were shipped to the Pacific Northwest Water Laboratory at Corvallis, Oregon, for analysis. The maximum elapsed time between first sample collection and start of analysis was 23 hours.

Each sample was analyzed according to the latest edition of Standard Methods[2] for the following parameters:

Volatile Solids (Total, dissolved, suspended)
Fixed Solids (Total, dissolved, suspended)
Chemical Oxygen Demand
Biochemical Oxygen Demand
Chlorides and sulfates
Alkalinity
Detergents (MBAS)
Total grease and oil

Revised methods of analysis were used for organic and ammonia nitrogen and total and ortho phosphates. The description of these methods can be supplied upon request.

Samples of the water supply to the houseboats were collected once daily and analyzed for the parameters listed above. Corrections were then made to the wastewater sample results so that all data reported are the net discharges due only to the waste.

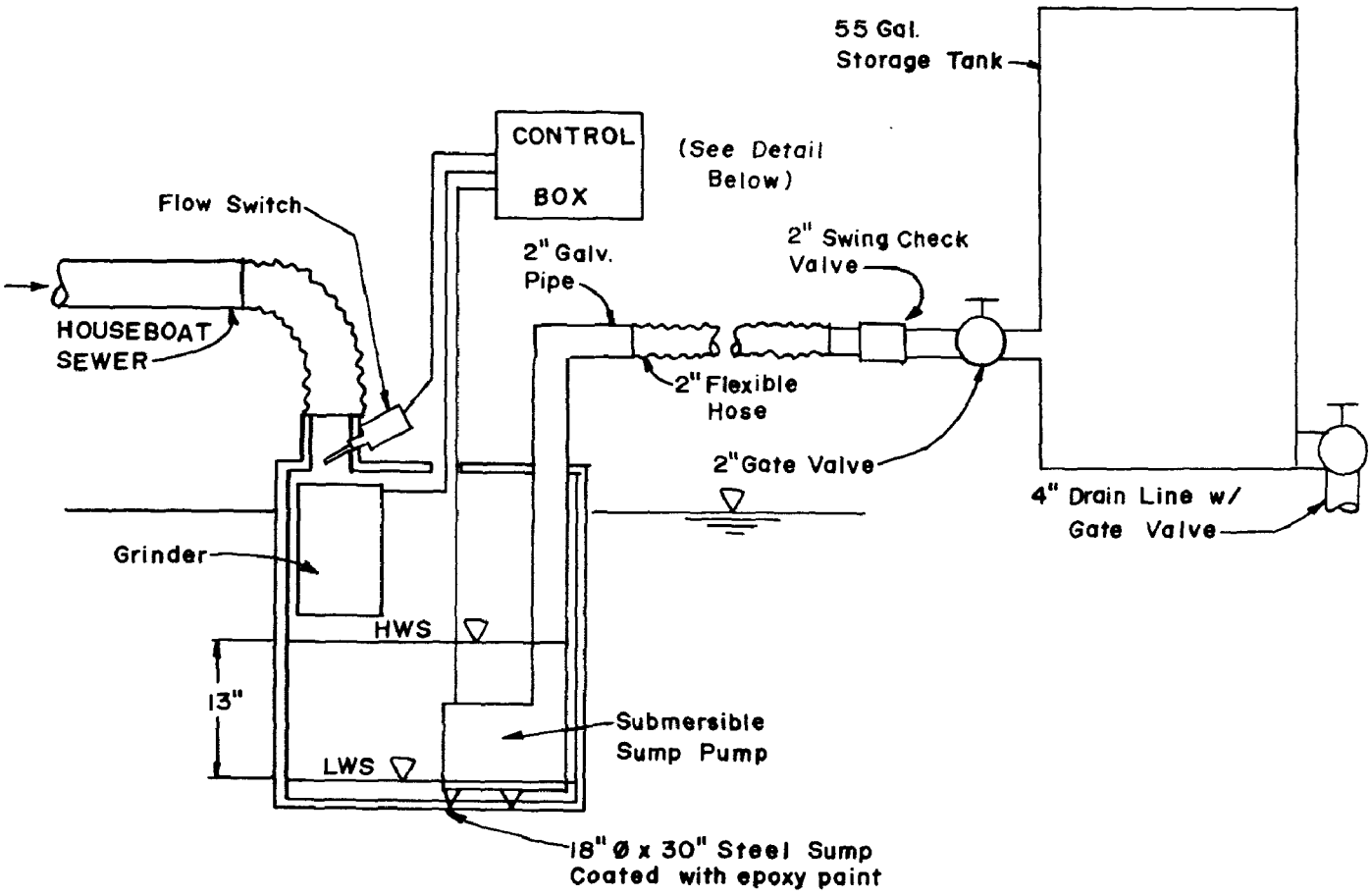

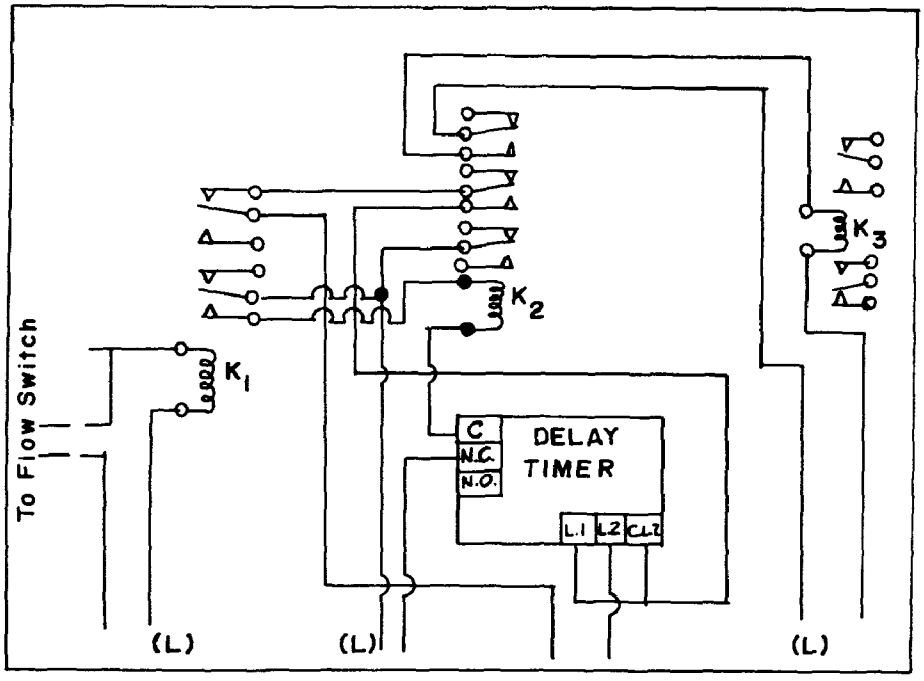

SAMPLING APPARATUS

Figure 1

C. Results

Table 2 lists values for the individual parameters in the average daily houseboat wastewater. It gives values for each houseboat sampled and the combined average for the period of sampling.

Table 3 gives the average per capita contribution of BOD_5, TS, COD, SS, and TGO with standard deviation and 95 percent confidence limits.

Table 4 gives data on the average daily variation in wastewater quality from each houseboat in terms of percent of daily total.

D. Discussion

General comparison of the waste strength from the two houseboats indicates that they varied inversely with the volume of waste contributed; i.e., the wastewater from houseboat No. 1 is less concentrated than the waste from houseboat No. 2 by a ratio of waste volumes. Calculation of per capita contributions from each houseboat confirmed this relation.

Review of Table 3 indicates a per capita BOD_5 of 43 gm/day with very little variation. This value is significantly less than the value of 77 gm/day (0.17 lb/day) normally used in estimating the strength of municipal wastes.

The average suspended solids from the houseboats is 34 gm/day but shows a wide variance in the samples obtained with a standard deviation of 15.7 gm/day. The normally-used figure for estimating suspended solids in domestic wastes is 0.2 lb/day or approximately 90 gm/day.

Table 2

Average Daily Houseboat Wastewater Characteristics

Parameter	Houseboat No. 1	Houseboat No. 2	Combined Average
Chlorides, mg/l	23	31	26
Sulfates, mg/l	12	26	18
Alkalinity, mg/l	72	119	90
Detergents as MBAS, mg/l	0.34	0.96	0.58
Total Solids, mg/l	322	504	393
Total Volatile Solids, mg/l	221	341	269
Suspended Solids, mg/l	139	173	150
Volatile Suspended Solids, mg/l	113	152	128
Kjeldahl Nitrogen, mg/l	47.8	67.0	55.4
Total Phosphates, mg/l	23.3	49.1	34.0
Ortho Phosphate, mg/l	17.7	21.7	19.3
Chemical Oxygen Demand, mg/l	322	460	377
Biochemical Oxygen Demand, mg/l	164	222	187
Total Grease and Oil, mg/l	66.3	92	76.5
Average Daily Flow, gallons	157	103	130

Table 3

Per Capita Houseboat Waste
gm/day/capita

Parameter	Mean	Standard Deviation	95% Confidence Limits
BOD_5	43	6.2	± 3
COD	87	39.9	± 17.7
Total Solids	94	33.9	± 15.4
Suspended Solids	34	15.7	± 7.1
Grease and Oil	17.4	17.0	± 7.7

Table 4

Variation in Daily Houseboat Wastewater Quality
in Percent of Daily Total

HOUSEBOAT NO. 1

Parameter	2100-0900	0900-1300	1300-1700	1700-2100
Flow	35	27	19	19
BOD_5	25	39	19	17
COD	26	43	18	13
Total Nitrogen	31	43	14	12
Total PO_4	31	43	14	12
Total Solids	25	38	19	18

HOUSEBOAT NO. 2

Parameter	2100-0900	0900-1200	1200-1430	1430-1700	1700-1900	1900-2100
Flow	30	24	3	4	23	16
BOD_5	28	29	2	2	22	17
COD	34	28	3	1.5	20	13.5
Total Nitrogen	46.5	8.5	1	5	22	17
Total PO_4	26	30.5	9	1.5	16	17.5
Total Solids	28	26	4.5	2.0	20	19.5

The value for houseboats is less than half this standard value.

The average per capita BOD and SS from the homes sampled by Watson[3] more closely agree with the standard design values.

It has been reported that the average per capita contribution in feces and urine of total nitrogen, phosphorus, total solids, and chloride is 15.5, 1.5, 80 and 11 gm/day, respectively.[4][5] Comparison of these figures with those for houseboat wastes reported in Table 3 indicates that the urine and feces wastes contributed essentially all of the total nitrogen and total phosphates and a major portion of the total solids. This was expected as a result of the low number of water-using fixtures on houseboats and the type of population residing aboard most of the homes.

In a study of five Ohio towns, Bunch and Ettinger[6] reported the average concentrations of various parameters contributed through water use. These data are compared with an average of the houseboat data below:

Parameter mg/l	Average Houseboat Data	Normal[6] Domestic Sewage
COD	377	143
Total Nitrogen	55.4	22.0
Total Alkalinity	90	122
Total Phosphate	34.0	24.3
Ortho Phosphate	19.3	22.8
Total Solids	393	291
Sulfates	18	33
Chlorides	26	56

With the exception of alkalinity, chlorides, and sulfates, the houseboat wastewater is more concentrated than normal domestic sewage.

This is attributed to infiltration and storm water contributions to the normal domestic sewage, as well as certain low strength industrial and commercial wastes, all of which would dilute the individual household contribution.

Table 5 compares the per capita land residential waste to per capita houseboat waste. It can be seen that the land household contributes significantly more per capita detergent, BOD, COD, and solids (total and suspended) than the typical houseboat. Per capita flow, total nitrogen, phosphates (total and ortho) and total grease and oil contributions all are fairly close with any differences well within the variability of the data reported.

A major portion of the differences in the per capita detergents, solids, and organic matter could be explained on the basis of different volumes of laundry wastes. For example, the three homes studied by Watson all had 2 or more children and complete home laundry facilities whereas the houseboats had no children and home laundry facilities were used only occasionally. Children would tend to increase per capita laundry water use while decreasing other per capita use such as that for baths, showers, etc. Analytical data have been reported on laundry effluent giving a total solids concentration of 1100 mg/l and a BOD_5 of 300 mg/l.[5] It has also been reported that approximately 20 percent of the total daily flow is due to laundry wastes.[7]

Based on data in Table 4 the waste discharge pattern from both houseboats was quite similar with approximately 30 percent of the

Table 5

Ratio of Per capita Land Residential Waste

to Per capita Houseboat Waste

Parameter	Ratio of Average Land Residence to Houseboat Per capita Wastes [a]
Detergents	8.9
Total Nitrogen	1.0
Total PO_4	1.4
Ortho PO_4	1.4
BOD_5	2.0
COD	1.6
Total Solids	2.0
Total Volatile Solids	1.7
Suspended Solids	2.2
Grease and Oil	0.7
Flow	0.9

(a) Average of data from three households reported by Watson, et al. [3]

daily waste load contributed during the hours of 2100 to 0900.

In general, the variation in waste strength by periods represented in this study was not as extreme as was expected and, therefore, does not appear to warrant special consideration in the design of treatment processes.

IV. WASTE QUANTITY CHARACTERISTICS

A. Location

It was assumed that the quantity of waste discharged was equal to the water used at moorages and houseboats. This assumes little or no consumptive loss. This assumption was checked during the sampling survey of two houseboats at Seattle and it was found that over 99 percent of the water used was returned as waste. On this basis quantity characteristics were determined by monitoring continuously the water use for various periods at three moorages in Portland, Oregon, and at the two individual houseboats in Seattle, Washington.

Moorage No. 1 had a total of 21 residential houseboats, a combination houseboat-machine shop, and several boathouses. There was a total of 55 people residing on the houseboats during the duration of this study. The population was well mixed as regards working and nonworking adults and preschool- and school-age children. This moorage was monitored continuously from April 5, 1967, to May 31, 1967.

Moorage No. 2 had 17 houseboats and one clubhouse with facilities at the time of the study. There were 33 persons living on the houseboats, primarily married adults, with only one of the adults working. This moorage was monitored for the periods August 26-30, 1966, and October 3-10, 1966.

Moorage No. 3 had 18 houseboats with a resident population of 31 persons. Most of the people could be classed as young married

couples or single and working. This moorage was monitored for the periods September 3-10, 1966, and October 22-25, 1966.

Houseboats No. 1 and 2 were described previously.

B. Methods

The water use at Moorage No. 1 was monitored continuously by installing a 1-inch meter with a transmitter head. This was attached to a continuous flow rate recording instrument with a 7-day chart. Data was extrapolated from the charts at 3-hour intervals using a radial planimeter.

Water use at moorages No. 2 and 3 was monitored by the City of Portland Water Department for the periods mentioned. Data was extrapolated from charts provided by the City at 2-hour intervals.

Water use at the two houseboats was recorded by installing a water meter on each line. The meter was read each time a sample was collected which was four times daily at houseboat No. 1 and three times daily during the week and five times daily on weekends for houseboat No. 2. The waste discharged by each houseboat was determined by measuring the depth of waste in the 55-gallon barrel sample collector described previously. The barrel was rated for depth versus gallons.

C. Results

Table 6 summarizes the average maximum and minimum daily flows plus hourly variations in water use at the three moorages and two houseboats. These data are reported on a gallons-per-capita basis.

Table 6

Houseboat and Moorage
Water Use

Results in gallons per capita per day

Unit	Houseboats		Moorages		
	No. 1	No. 2	No. 1	No. 2	No. 3
Average Day	78	56	62	61	62
Minimum Day	54	30	53	-	-
Maximum Day	112	142	75	-	-
Min. 3 hours	0	0	13	15	3
Max. 3 hours	280	700	103	145	275
Avg. 18 hours	-	-	73	74	78
Min. Day/Avg. Day	0.69	0.54	0.85	-	-
Max. Day/Avg. Day	1.44	2.54	1.21	-	-
18 hours/Avg. Day	-	-	1.18	1.21	1.26

Tables 7, 8, and 9 present data on the water use at the three moorages for both weekday and weekend periods.

D. Discussion

As indicated by Table 6, the average daily per capita water use at moorages showed little variation with an average use of 62 gpcd. The average individual houseboat use was 56 and 78 gpcd for the two homes studied which is close to the moorage average value. These data agree closely with the figure of 60 gpcd for the average dry weather waste flow from a single family residence as reported by Robinson.[8] The value of 75 gpcd for single family residences recommended in the Manual of Septic Tank Practices[7] appears to be a conservative figure for estimating moorage and houseboat wastewater quantities.

Robinson[8] reports that the flow in a sewer serving 18 homes was found to vary rapidly from a trace to nearly 400 gpcd and that an allowance of 3 times the average flow be provided in sewer lateral design. The maximum 3-hour flow noted for an individual houseboat was 700 gpcd. For the moorages, this value was 275 gpcd. The ratios of these values to the average daily flow are 12.5 and 4.5 respectively.

The basic design flow variations used for small army installations as reported by Babbitt[9] are 70 gpcd for the 24-hour average, 97.5 for the 16-hour average day, 122.5 gpcd for the 4-hour maximum day, and 210 gpcd for the extreme peak. Data for the moorages generally fall within this range but is exceeded by the individual houseboats for the extreme fluctuations.

Table 7

Houseboat Moorage No. 1 Water Use[a]
April 5 to May 31, 1967

Hour	WEEKDAYS Gallons	WEEKDAYS % Total	WEEKENDS Gallons	WEEKENDS % Total
24-3	250	7.5	279	7.5
3-6	173	5.2	203	5.5
6-9	519	15.6	414	11.2
9-12	410	12.3	550	14.8
12-15	448	13.5	560	15.1
15-18	465	14.0	576	15.5
18-21	568	17.0	595	16.1
21-24	496	14.9	530	14.3
TOTALS	3,329	100.0	3,707	100.0

[a]Moorage had 22 houseboats with 55 residents at time of study. Population mixed as to number of families and number of single persons.

Table 8

Houseboat Moorage No. 2 Water Use[a]
August 26-30 and October 3-10, 1966

Hour	WEEKDAYS Gallons	WEEKDAYS % Total	WEEKENDS Gallons	WEEKENDS % Total
24-2	105	5.3	112	5.5
2-4	81	4.1	80	3.9
4-6	96	4.8	67	3.3
6-8	114	5.8	142	7.0
8-10	256	12.9	179	8.8
10-12	180	9.1	252	12.4
12-14	226	11.4	254	12.5
14-16	175	8.8	200	9.8
16-18	107	5.4	181	8.9
18-20	192	9.7	204	10.0
20-22	253	12.8	221	10.9
22-24	195	9.9	142	7.0
TOTALS	1,980	100.0	2,034	100.0

[a]Moorage had 17 houseboats with 33 residents at time of study.

Table 9

Houseboat Moorage No. 3 Water Use[a]
September 3-10 and October 22-25, 1966

Hours	WEEKDAYS Gallons	WEEKDAYS % Total	WEEKENDS Gallons	WEEKENDS % Total
24-2	44	2.5	42	1.8
2-4	67	3.8	72	3.0
4-6	123	7.0	108	4.6
6-8	248	14.1	127	5.4
8-10	130	7.3	399	17.0
10-12	120	6.8	342	14.5
12-14	152	8.6	244	10.3
14-16	76	4.3	302	12.8
16-18	173	9.8	222	9.4
18-20	225	12.8	217	9.2
20-22	211	12.0	175	7.4
22-24	194	11.0	108	4.6
TOTAL	1,760	100.1	2,358	100.0

[a]Moorage had 18 houseboats with 31 residents at time of study.

The water use pattern and therefore waste discharge pattern of houseboat moorages given in Tables 7, 8, and 9, is essentially the same classical pattern that is exhibited in most texts and studies of this nature. This pattern is one with peak periods of use occurring during food preparation and mealtime periods and low use occurring during the bedtime period.

It was interesting to note the difference in use pattern by type of population at the moorages. Moorage No. 2 had a family-oriented population and had a use pattern essentially the same for both weekend and weekday periods with peak use near mealtimes. Moorage No. 3 had a population composed mainly of unmarried, working adults and had a water use pattern reflecting this fact. Weekday use showed little use during the noon period because most of the population was at work. On weekends, the pattern indicated a high use between 0800 and 1000 that tapered off through the day. There was no sharp trend following mealtimes indicative of an unmarried population.

Moorage No. 1, on the other hand, had a mixed population. Its water use reflected this fact with a pattern somewhat in between that of moorages No. 2 and 3.

In all three moorages studied, approximately 87 percent of the total daily use occurred in the 18-hour period from 0600 to 2400. This figure appears reasonable when compared with data reported by Babbitt[7] for small populations. He reports a figure of approximately 83 percent in a 16-hour period.

V. TREATMENT OF HOUSEBOAT WASTES

Treatment of the houseboat wastes can be considered in the same manner as the treatment of any domestic or municipal wastewater and would be amenable to any number of processes presently used to treat these wastes. State and Federal laws in most cases will require a minimum of secondary treatment and disinfection before the waste can be discharged to a surface water. This requires essentially that 85-90 percent of the BOD_5 and suspended solids be removed and that the waste be chlorinated to maintain a residual of 0.5 mg/l after 30-60 minutes retention.

However, before the waste can be treated it must be moved from the sewer to point of treatment. In the case of houseboats located on moving bodies of water such as rivers and tidal estuaries, pumps will be necessary to move the waste. Gravity sewers could be designed but in most cases it would require their placement under water.

Two methods of pumping were considered suitable for the individual houseboat wastewater. These included a small commercially available centrifugal pump preceded by a macerating device (see Figure 1) and a pneumatic ejector which was designed specifically for houseboat application.

A submersible centrifugal pump preceded by maceration was tested for a 4-week period on two houseboats in Seattle, Washington, as described previously. The pump unit worked satisfactorily over this

period with only one instance of clogging difficulty. This clogging occurred during the first 3 days of use and was due to a rag which clogged the pump. The occupants of the houseboat were informed of the difficulty and no trouble was encountered thereafter. The grinding mechanism on the pump, though, was a continual source of difficulty. This was not due to the waste, but due entirely to physical limitations of the flow switch apparatus. The switch was not sealed completely and moisture in the air and splashings from the lake shorted the unit out. This difficulty could be eliminated with proper selection of equipment and installation.

A pneumatic ejector was tested that was built specifically for houseboat and individual home application. The unit featured non-clog check valves, light weight aluminum construction of valve casings, 10 gallon capacity, heavy gage steel tank construction, and no moving parts. The unit was operated by a small 3/4 hp compressor at a gage pressure of 60-80 pounds per square inch (psi). The pump was installed on a houseboat in the Portland, Oregon, area that was rented by a woman and one child of school age. The pump operated without difficulty for a period of 8 weeks. ABS plastic pipe was found to be completely unsuitable for this use. This pipe is brittle and subject to cracking from impact loads. Schedule 80 PVC pipe was found to be completely satisfactory and easy to install on an installation of this nature.

An illustration of the pump and compressor is given in Figure 2.

There are essentially three different methods in which the waste can be treated to meet secondary requirements: physically and/or chemically, or biologically.

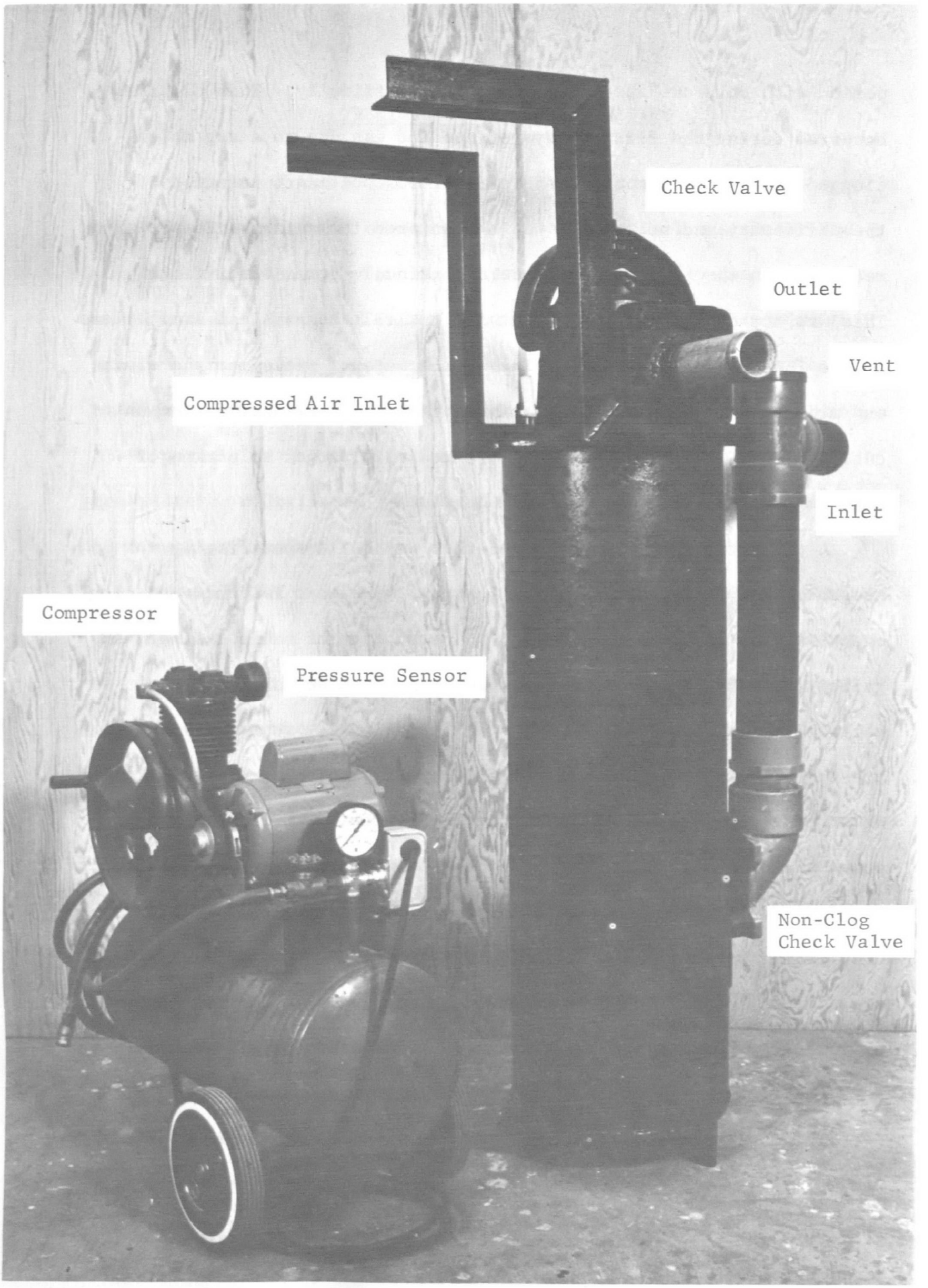
Check Valve
Outlet
Vent
Compressed Air Inlet
Inlet
Compressor
Pressure Sensor
Non-Clog
Check Valve

Figure 2

In the case of the houseboat and moorage wastes an extended aeration biological process is probably the best suited for this application. This process involves little mechanical equipment and in areas where solids wasting in the effluent is permitted, no sludge handling. Sludge handling costs alone generally represent 50 percent or more of wastewater treatment costs and the advantage of the extended aeration process from this standpoint alone is obvious.

The main disadvantage to the extended aeration process is the operation and maintenance skill required to achieve proper operation. This is actually true of all treatment processes but more so with biological processes due to close control required to maintain an optimum environment for the biological process. Proper operation and maintenance requires daily attendance. Many of the manufacturers of the extended aeration units are now offering a service contract with purchase of their equipment. This type of arrangement, if conscientiously performed by the manufacturer, should make the small packaged extended aeration plant acceptable for treating both moorage and individual houseboat wastes.

Campbell and Smith[10] reported an investigation of individual household aerobic treatment units in 1962. They installed an aerobic treatment unit with 560 gallons aeration capacity to serve a family of 4 individuals. After more than a year's study they concluded that similar type units may have wide applicability. The cost is not much greater than a septic tank and the maintenance no more than is required for a common household oil burner. The effluent from the

plant had an average BOD_5 of 80 mg/l and suspended solids of 33 mg/l. The unit functioned satisfactorily after no-load periods of at least three weeks. The author has pointed out that the major weaknesses of the unit were inadequate settling and short circuiting under shock loading conditions. While the efficiencies reported by Campbell and Smith do not meet secondary standards, proper settling and hydraulic design should make the standards attainable.

There are many commercially available units that could be used for both group and individual situations.

DESIGN CRITERIA

Based on the data presented previously, the following criteria are suggested for use in the design of biological systems to treat houseboat wastes:

1. The organic strength of the waste can be conservatively estimated by the standard figure of 0.17 pounds per capita of BOD_5 per day. If aeration is provided for this strength, peak flows and loadings will be provided for adequately.

2. The average 18-hour daily per capita flow is approximately 75 gallons per day and the average number of persons per houseboat approximately two. This indicates that a minimum flow of 150 gallons per day be allowed per houseboat. The minimum figure of 600 gpd per home as suggested by the National Academy of Sciences[11] appears to be quite conservative for use in the sizing of treatment units for houseboats.

3. The sizing of settling units and design of weir overflow rates should be based on the maximum 3-hour flow of 700 gpcd. If hydraulic storage is provided in the aeration tank, these rates could be reduced in accordance with flow rates to be expected.

4. The aeration tank should be sized with a detention period of 24 hours on the basis of design flow or a loading of 20 pounds of BOD_5 per 1,000 cubic feet of aeration tank, whichever gives the larger volume. The hydraulic load or detention period will generally govern for houseboat wastes.

5. It may be necessary to add additional buffering capacity to the waste in order to maintain a suitable pH range of 6.5 to 8.5 in the aerator due to the low alkalinity in the houseboat waste.

6. The National Academy of Sciences[11] recommends an air supply of "not less than 1,000 cubic feet per pound of influent 5-day BOD. The air may be applied continuously or intermittently." This would indicate that the average houseboat would require an air supply with a capacity of 200 to 300 cubic feet per day.

7. There are significant quantities of grease and oil in the houseboat waste. This will require adequate scum removal facilities to insure trouble-free operation of any biological treatment unit.

VII. BIBLIOGRAPHY

1. Report of Technical Committee on Plumbing Standards, Public Health Service. September 1962.

2. Standard Methods for the Examination of Water and Wastewater, 12th Edition, APHA, AWWA, WPCF.

3. Watson, K. S., Farrel, R. P., and Anderson, J. L. "The Contribution from the Individual Home to the Sewer System." Paper presented before the annual WPCF Meeting, September 1966.

4. Sunderman, F. W. and Boerner, F. "Normal Values in Clinical Medicine." p. 260, W. B. Sanders and Co. (1949).

5. "The Effect of Industrial Wastes on Sewage Treatment." New England Interstate Water Pollution Control Commission. June 1965.

6. Bunch, R. L. and Ettinger, M. B. JWPCF 36, 1411 (1964).

7. Manual of Septic Tank Practices. Public Health Service Publication No. 526, 1957.

8. Robinson, Lloyd R. "Design Considerations for Sanitary Sewer Extensions." Water & Sewage Works, July 1967.

9. Babbitt, H. E. Sewerage and Sewage Treatment, 6th Edition, John Wiley & Sons, Inc. 1947.

10. Campbell, L. A. and Smith, D. K., "An Investigation of Individual Household Aerobic Sewage Treatment Units." Canadian Municipal Utilities, November 1963.

11. Report on Individual Household Aerobic Sewage Treatment Systems, National Academy of Sciences, Pub. 586, Washington, D. C., 1957.