EPA-650/2-74-122

NOVEMBER 1974

Environmental Protection Technology Series

TRACE POLLUTANT EMISSIONS FROM THE PROCESSING OF NON-METALLIC ORES

Office of Research and Development
U.S. Environmental Protection Agency
Washington, DC 20460

RESEARCH REPORTING SERIES

Research reports of the Office of Research and Development, U. S. Environmental Protection Agency, have been grouped into series. These broad categories were established to facilitate further development and application of environmental technology. Elimination of traditional grouping was consciously planned to foster technology transfer and maximum interface in related fields. These series are:

1. ENVIRONMENTAL HEALTH EFFECTS RESEARCH
2. ENVIRONMENTAL PROTECTION TECHNOLOGY
3. ECOLOGICAL RESEARCH
4. ENVIRONMENTAL MONITORING
5. SOCIOECONOMIC ENVIRONMENTAL STUDIES
6. SCIENTIFIC AND TECHNICAL ASSESSMENT REPORTS
9. MISCELLANEOUS

This report has been assigned to the ENVIRONMENTAL PROTECTION TECHNOLOGY series. This series describes research performed to develop and demonstrate instrumentation, equipment and methodology to repair or prevent environmental degradation from point and non-point sources of pollution. This work provides the new or improved technology required for the control and treatment of pollution sources to meet environmental quality standards.

EPA-650/2-74-122

TRACE POLLUTANT EMISSIONS FROM THE PROCESSING OF NON-METALLIC ORES

by

V. Katari, G. Isaacs, and T. W. Devitt

PEDCo-Environmental Specialists, Inc.
Suite 13
Atkinson Square
Cincinnati, Ohio 45246

Contract No. 68-02-1321, Task 4
ROAP No. 21AUZ-02a
Program Element No. 1AB015

EPA Project Officer: D. K. Oestreich

Control Systems Laboratory
National Environmental Research Center
Research Triangle Park, North Carolina 27711

Prepared for:

OFFICE OF RESEARCH AND DEVELOPMENT
U.S. ENVIRONMENTAL PROTECTION AGENCY
WASHINGTON, D.C. 20460

November 1974

EPA REVIEW NOTICE

This report has been reviewed by the National Environmental Research Center - Research Triangle Park, Office of Research and Development, EPA, and approved for publication. Approval does not signify that the contents necessarily reflect the views and policies of the Environmental Protection Agency, nor does mention of trade names or commercial products constitute endorsement or recommendation for use.

This document is available to the public for sale through the National Technical Information Service, Springfield, Virginia 22161.

TABLE OF CONTENTS

	Page
List of Figures	vii
List of Tables	x
Acknowledgement	xiv
1.0 INTRODUCTION	1-1
2.0 CEMENT INDUSTRY	2-1
2.1 Industry Background	2-1
2.2 Raw Materials	2-2
2.3 Products	2-4
2.4 Process Description	2-4
2.4.1 Mining	2-7
2.4.2 Size Reduction and Blending	2-7
2.4.3 Calcination	2-11
2.4.4 Finishing Operations	2-15
2.5 Major Pollutant Sources	2-19
3.0 CLAY PRODUCTS	3-1
3.1 Industry Background	3-1
3.2 Raw Materials	3-2
3.3 Products	3-4
3.4 Process Description	3-4
3.4.1 Mining	3-4
3.4.2 Beneficiation	3-9
3.4.3 Porcelain Manufacturing	3-12
3.4.4 Refractory Manufacturing	3-14
3.4.5 Brick Manufacturing	3-16
3.5 Major Pollutant Sources	3-18

TABLE OF CONTENTS

		Page
4.0	GYPSUM INDUSTRY	4-1
4.1	Industry Background	4-1
4.2	Raw Materials	4-2
4.3	Products	4-4
4.4	Process Description	4-5
4.4.1	Mining	4-5
4.4.2	Upgrading	4-5
4.5	Major Pollutant Sources	4-9
5.0	LIME INDUSTRY	5-1
5.1	Industry Background	5-1
5.2	Raw Materials	5-2
5.3	Products	5-2
5.4	Process Description	5-2
5.4.1	Mining	5-5
5.4.2	Beneficiation	5-7
5.4.3	Calcination	5-8
5.4.4	Finishing Operations	5-11
5.5	Major Pollutant Sources	5-13
6.0	PHOSPHATE ROCK INDUSTRY	6-1
6.1	Industry Background	6-1
6.2	Raw Materials	6-3
6.3	Products	6-5
6.4	Process Description	6-8
6.4.1	Mining	6-8
6.4.2	Beneficiation	6-10
6.4.3	Thermal Reduction Method (Elemental Phosphorus Production)	6-12
6.4.4	Phosphoric Acid Production	6-16
6.4.5	Superphosphoric Acid (SPA) Production	6-20

TABLE OF CONTENTS

		Page
6.4.6	Normal Superphosphate	6-21
6.4.7	Triple Superphosphate Production	6-23
6.4.8	Diammonium Phosphate Production	6-25
6.4.9	Nitrogen Fertilizers	6-25
6.5	Major Pollutant Sources	6-26
7.0	POTASH	7-1
7.1	Industry Background	7-1
7.2	Raw Materials	7-2
7.2.1	Description of the Typical Potash Ores	7-3
7.3	Products	7-6
7.4	Process Description	7-7
7.4.1	Mining	7-7
7.4.2	Potassium Chloride Production	7-8
7.4.3	Potassium Sulphate Production	7-13
7.4.4	Potassium Nitrate Production	7-16
7.5	Major Pollutant Sources	
8.0	BORON COMPOUNDS	8-1
8.1	Industry Background	8-1
8.2	Raw Materials	8-2
8.3	Products	8-3
8.4	Process Description	8-4
8.4.1	Mining	8-5
8.4.2	Beneficiation	8-5
8.4.3	Borax Production	8-6
8.4.4	Anhydrous Borax Production	8-7
8.4.5	Boric Acid Production	8-8
8.4.6	Boric Oxide Production	8-9
8.5	Major Pollutant Sources	8-9
9.0	MICA INDUSTRY	9-1
9.1	Industry Background	9-1

TABLE OF CONTENTS

	Page
9.2 Raw Materials	9-3
9.3 Products	9-3
9.4 Process Description	9-3
9.4.1 Mining	9-3
9.4.2 Beneficiation	9-6
9.4.3 Grinding	9-8
9.5 Major Pollutant Sources	9-10
10.0 FLUORSPAR	10-1
10.1 Industry Background	10-1
10.2 Raw Materials	10-2
10.3 Products	10-4
10.4 Process Description	10-7
10.4.1 Mining	10-7
10.4.2 Beneficiation	10-7
10.5 Major Pollutant Sources	10-13
11.0 RECOMMENDATIONS	11-1
APPENDIX A PRODUCTION AND CONSUMPTION STATISTICS	A-1
APPENDIX B CEMENT PRODUCTION STATISTICS	B-1
APPENDIX C CLAY PRODUCTION STATISTICS	C-1
APPENDIX D GYPSUM PRODUCTION STATISTICS	D-1
APPENDIX E LIME PRODUCTION STATISTICS	E-1
APPENDIX F PHOSPHATE INDUSTRY STATISTICS	F-1
APPENDIX G POTASH PRODUCTION STATISTICS	G-1
APPENDIX H BORON PRODUCTION STATISTICS	H-1
APPENDIX I MICA INDUSTRY STATISTICS	I-1
APPENDIX J FLUORSPAR INDUSTRY STATISTICS	J-1

LIST OF FIGURES

Figure		Page
2.1	Cement Industry	2-8
3.1	Clay Industry	3-7
4.1	Gypsum Industry	4-6
5.1	Lime Industry	5-6
6.1	Phosphate Rock Industry	6-9
7.1	Potash Industry	7-9
8.1	Boron Industry	8-5
9.1	Mica Industry	9-4
10.1	Fluorspar Industry	10-8
A-1	Abrasive Materials Production and Consumption Statistics (1971).	A-2
A-2	Asbestos Production and Consumption Statistics (1971).	A-3
A-3	Boron Production and Consumption Statistics (1971).	A-4
A-4	Cement Production and Consumption Statistics (1971).	A-5
A-5	Clay Production and Consumption Statistics (1971).	A-6
A-6	Diatomite Production and Consumption Statistics (1971).	A-7
A-7	Feldspar Production and Consumption Statistics (1971).	A-8
A-8	Fluorspar Production and Consumption Statistics (1971).	A-9

LIST OF FIGURES

Figure		Page
A-9	Natural Graphite Production and Consumption Statistics (1971).	A-10
A-10	Gypsum Production and Consumption Statistics (1971).	A-11
A-11	Kyanite and Related Minerals Production and Consumption Statistics (1971).	A-12
A-12	Lime Production and Consumption Statistics (1971).	A-13
A-13	Mica Production and Consumption Statistics (1971).	A-14
A-14	Peat Production and Consumption Statistics (1971).	A-15
A-15	Perlite Production and Consumption Statistics (1971).	A-16
A-16	Phosphate Rock Production and Consumption Statistics (1971).	A-17
A-17	Potash Production and Consumption Statistics (1971).	A-18
A-18	Pumice Production and Consumption Statistics (1971).	A-19
A-19	Salt Production and Consumption Statistics (1971).	A-20
A-20	Sand and Gravel Production and Consumption Statistics (1971).	A-21
A-21	Sodium Sulfate Production and Consumption Statistics (1971).	A-22
A-22	Sodium Carbonate Production and Consumption Statistics (1971).	A-23
A-23	Sulfur and Pyrites Production and Consumption Statistics (1971).	A-24
A-24	Stone Production and Consumption Statistics (1971).	A-25

LIST OF FIGURES

Figure		Page
A-25	Talc, Soapstone, etc., (pyrophyllite) Production and Consumption Statistics (1971).	A-26
A-26	Vermiculite Production and Consumption Statistics (1971).	A-27

LIST OF TABLES

Table		Page
1.1	Quantities of Ore Mined and Processed in the United States	1-2
1.2	Number of Domestic Nonmetal Mines in 1971, by Commodity and Magnitude of Crude Ore Production	1-3
2.1	Daily Clinker Production Capacities of Cement Plants in the United States - 1971	2-1
2.2	Typical Sources of Raw Materials Used in Manufacture of Portland Cement	2-2
2.3	Percent Oxide Composition of Typical Cement Raw Materials	2-5
2.4	Typical Composition of Various Cements	2-6
2.5	Size Distribution of Dust Emitted from Kiln Operations in Cement Manufacturing Without Controls	2-13
2.6	Typical Emission Data from Five Cement Kilns and Coolers in the United States	2-16
2.7	Range of Trace Materials from Cement Plants	2-18
3.1	Analyses of Clay Minerals	3-5
3.2	Spectrographic Analysis of Bentonite from Clay Spur, Wyoming	3-6
4.1	Crude Gypsum Mined in the United States, by State	4-2
4.2	Calcined Gypsum Produced in the United States, by State	4-2
4.3	Analysis of Gypsum	4-4
5.1	Lime Produced in the United States, by Size of Plant	5-1

LIST OF TABLES

Table		Page
5.2	Representative Chemical Analyses of Different Types of U.S. Limestone	5-3
5.3	Spark Source Mass Spectrographic Analyses of Limestones	5-4
5.4	Typical Analyses of Commercial Quicklimes	5-5
5.5	A Typical Overall Kiln Exhaust Gas Composition	5-9
5.6	Typical Exhaust Gas Production for Various Kiln Sizes	5-9
5.7	Typical Chemical Analysis of Lime Kiln Emissions (Producing Quicklime)	5-10
5.8	Typical Chemical Analysis of Lime Kiln Emissions (Producing Dolomite Lime)	5-11
5.9	Range of Typical Chemical Analyses of Commercial Hydrates	5-12
5.10	Reported Dust Emission Values from Lime Plant Operations	5-14
6.1	Production of Phosphate Rock in the United States, by State	6-3
6.2	Analysis of Phosphate Rock: Florida	6-4
6.3	Representative Analysis of Commercial Phosphate Rocks	6-6
6.4	Quantitative Spectrographic Analysis from the Four Areas of Eocene Rocks Studied in Wyoming and from the Uinta Basin, Utah	6-7
6.5	Size Distribution of Florida Pebble Phosphate Slimes	6-11
6.6	Chemical and Mineralogical Analysis of Typical Phosphatic Slime	6-11
6.7	Particulate Emission Factors for Phosphate Rock Processing Without Controls	6-12
6.8	Operating Data for a Phosphorus Furnace	6-14
6.9	Average Analysis of Typical Phosphorus Furnace Slag	6-14

LIST OF TABLES

Table		Page
6.10	Components of Typical Wet-Process Acid	6-16
6.11	Typical Analysis of a Commercial Food-Grade Phosphoric Acid	6-19
6.12	Analysis of Typical Streams	6-22
6.13	Fluorine Emissions for Various Processes	6-28
7.1	Potash Minerals	7-4
7.2	Composition of Potash	7-5
7.3	Typical Mineralogical Analysis of Potash Ore of Carlsbad-New Mexico	7-6
7.4	Typical Analysis of Flotation Grade of Potassium Chloride	7-11
7.5	A Typical Analysis of Mother Liquor and Waste Liquor from Hydrator	7-15
8.1	Principal Boron-Containing Minerals	8-2
8.2	Analysis of Borate Ore from Kramer District (California)	8-5
10.1	Analysis of Fluorspar	10-5
10.2	Spectrographic Analysis of Fluorite from Illinois and Kentucky	10-6
10.3	Representative Screen Analysis of Classifier Overflow	10-10
10.4	Analysis of Acid Fluorspar Concentrate	10-12
A-1	Factors for Conversion of English to Metric Units	A-2
B-1	Principal Producers of Cement in the United States	B-2
B-2	Production of Cement in United States, by State, 1971	B-6
C-1	Principal Producers of Clay in the United States	C-2
C-2	Production of Clays in the United States, by State, 1971	C-4
D-1	Principal Producers of Gypsum in the United States	D-2

LIST OF TABLES

Table		Page
D-2	Principal Gypsum Producing States in the United States, 1971	D-6
E-1	Principal Producers of Lime in the United States	E-2
E-2	Production of Lime in the United States, by State, 1971	E-4
E-3	Lime Produced in the United States, by Size of Plant	E-5
F-1	Principal Phosphate Rock Producing Companies in the United States	F-2
F-2	Normal Superphosphate Plants--Major Producers, 1968	F-3
F-3	Triple Superphosphate Plants--June 1968	F-12
F-4	Ammonium Phosphate Fertilizer Plants (Solid) 1968	F-14
F-5	Fertilizer Granulation Plants--December 1967	F-18
F-6	Phosphoric Acid Plants (Wet Process)--June 1968	F-34
F-7	Phosphoric Acid and Superphosphoric Acid Plants (Thermal Process)--June 1968	F-37
G-1	Principal Producers of Potash in the United States	G-2
H-1	Principal Producers of Boron in the United States	H-2
I-1	Mica Grinders in 1960	I-2
J-1	Principal Producers of Fluorspar	J-2

ACKNOWLEDGMENT

This report was prepared for the U.S. Environmental Protection Agency by PEDCo-Environmental Specialists, Inc., Cincinnati, Ohio. Mr. Timothy W. Devitt was the PEDCo Project Manager. Principal authors of the report were Mr. Vishnu Katari, Mr. Gerald Isaacs and Mr. Devitt.

Mrs. Anne Cassel was the project editor. Mr. Chuck Fleming was responsible for report graphics and final report preparation.

Mr. D. Oestreich was the Project Officer for the U.S. Environmental Protection Agency. PEDCo appreciates the assistance and cooperation extended by the Project Officer, various members of the Control Systems Laboratory, and Mr. Paul W. Spaite, EPA consultant.

1.0 INTRODUCTION

The objective of this study was to identify significant sources of emissions of potentially hazardous trace pollutants from mining and processing of nonmetallic minerals. For selecting some industries for study, the data on production, imports, exports, and consumption of each ore were assembled. Table 1.1 presents 1971 production and processing data on the quantities of 26 ores mined and processed in the United States. Figures A-1 through A-26 in Appendix A give production, import, and export data (including uses) for each ore. Table 1.2 gives the number of domestic nonmetallic mines in 1971, by commodity and magnitude of crude ore production.

After review of data on domestic ore processing, and consideration of the toxicity of potential pollutants and the significance of fugitive dust emissions, the following industries were selected for further study.

- Cement Industry
- Clay Industry
- Gypsum Industry
- Lime Industry
- Phosphate Rock Industry
- Potash Industry
- Boron Industry
- Mica Industry
- Fluorspar Industry

Table 1.1 QUANTITIES OF ORE MINED AND PROCESSED IN THE UNITED STATES

Type of Ore	Amount of ore mined in U.S., (metric tons)	Amount of ore processed in U.S., (metric tons)
Abrasive Materials	517,100	517,100[a]
Asbestos	118,800	736,600
Boron	949,800	956,200
Cement	70,870,000	73,760,000
Clays	51,710,000	41,710,000
Diatomite	485,400	186,200
Feldspar	601,500	601,500
Fluorspar	739,400	1,713,000
Graphite	W	52,620[b]
Gypsum		14,970,000
Kyanite & Related Materials	W	1,089[b]
Lime	17,770,000	17,900,000
Mica	216,800,000	216,800,000
Peat	549,800	816,500
Perlite	449,000	319,900
Phosphate Rock	116,100,000	116,100,000
Potash	4,153,000[c]	8,342,000
Pumice	3,008,000	3,371,000
Salt	39,990,000	43,540,000
Sand & Gravel	834,300,000	834,300,000
Sodium Sulfate	668,600	912,600
Sodium Carbonate	6,386,000	6,486,000
Sulfur & Pyrites	7,138,000	8,618,000
Stone	272,200	272,000[a]
Talc, Soapstone, etc.	934,400	952,600
Vermiculite	272,200	272,200

a) Not including imports (data not available).
b) Includes domestic processing of only imported ore.
c) The quantity includes the potash from brine.
W) Withheld.

Table 1.2 NUMBER OF DOMESTIC NONMETAL MINES IN 1971, BY COMMODITY AND MAGNITUDE OF CRUDE ORE PRODUCTION PER ANNUM[a]

(short tons)

Commodity	Total number of mines	Less than 1000 tons	1000 to 10,000 tons	10,000 to 100,000 tons	100,000 to 1,000,000 tons	1,000,000 to 10,000,000 tons	More than 10,000,000 tons
Abrasives[b]	14	3	7	3	1	-	-
Asbestos	9	3	-	1	5	-	-
Barite	35	1	4	18	12	-	-
Boron minerals	2	-	-	1	-	1	-
Diatomite	11	2	1	7	1	-	-
Feldspar	40	2	22	12	4	-	-
Fluorspar	21	4	10	5	2	-	-
Gypsum	65	2	6	18	39	-	-
Mica	20	8	5	5	2	-	-
Perlite	14	2	5	5	2	-	-
Phosphate rock	55	1	9	8	17	16	4
Potassium salts	8	-	-	-	1	7	-
Pumice	107	18	36	45	8	-	-
Salt	20	-	3	2	9	6	-
Sodium carbonate (natural)	3	-	-	-	1	2	-
Talc, soapstone, pyrophyllite	55	7	22	25	1	-	-
Vermiculite	3	-	1	-	2	-	-
Other[c]	25	10	3	5	7	-	-
Total nonmetals	507[d]	63	134	160	114	32	4
Grand total	1,299	327	341	295	220	99	17

a) Excludes wells, ponds, or pumping operations.
b) Emery, garnet, and tripoli.
c) Aplite, graphite, greensand marl, iron oxide pigments (crude), kyanite, lithium minerals, magnesite, millstones, olivine, wollastonite, and zerolite.
d) In addition, there were 1398 clay mines, 7110 sand and gravel operations, 4715 crushed and broken stone operations, and 478 dimension stone operations, but specific data on these operations are not available.

Process flow diagrams identifying major processes and material flow were prepared for these selected industries. Sources of emissions of various pollutants are identified. Descriptions of processes are presented in Chapters 2 through 10.

These chapters are further divided into five sections. The first section presents background information, including overview of industry as well as industrial and processing trends. The second section describes raw material according to type of ore and area of availability. The third section lists the products and by-products of the industry. The fourth section describes the process, process operating conditions, process emissions, and material handling procedures. Emphasis was given to obtaining information on emission composition. The fifth section identifies the most significant emission sources within the industry.

In Chapter 3, the refractory and brick manufacturing procedures, and in Chapter 6, the fertilizer manufacturing procedures were investigated along with the main industrial processes because of their integrated relationship. In the study of potash and boron (Chapters 7 and 8, respectively), brine processing methods are not included.

In conducting this study a common set of nomenclature developed by EPA's Control System Laboratory was used so that the output of this study would parallel that of other CSL contractors studying other industries. The terms used and their definitions are listed below.

1. RAW MATERIALS are feed materials for processes. They are of two types: primary raw materials that are used

in the chemical form that they were taken from the land, water or air and secondary raw materials that are industrial intermediate products.

2. INDUSTRIES are made up of groups of companies that are considered competitors in production of the same products. Industries have an identifiable population of companies and have a high degree of commonality with respect to raw materials consumed, processes employed, products produced, environmental control problems experienced, pollutants produced, and control equipment used.

3. OPERATIONS are general industrial procedures by which materials are processed or products produced. Operations can consist of a series of processes, or can be accomplished by two or more alternative processes.

4. PROCESSES are the basic units that collectively describe industries. Processes comprise specific arrangements of equipment that accomplish, in a distinct way, chemical or physical transformation of input materials into end products, intermediate products, secondary raw materials or waste materials. Other process outputs include waste streams to the air, water, or land. Input materials can include primary or secondary raw materials, waste materials, or intermediate products. Where two or more different combinations of process steps accomplish the same chemical or physical transformation but have different environmental impacts (e.g., different emission characteristics), each combination is a distinct process.

5. PROCESS STEPS are the basic components of a process that utilizes process equipment or materials handling equipment (process equipment does not include control equipment). In cases where a piece of process equipment has two or more cycles or phases of operation with distinctly different emissions to the atmosphere, such cycles or phases can be considered sequential process steps.

6. SOURCES are process steps from which significant amounts of air, water, or land pollution can be discharged.

7. CONTROL EQUIPMENT is equipment whose primary function is to reduce emissions to the atmosphere. Its presence is not essential to the economic viability of the process.

8. COMPANIES include corporate subdivisions that have a product state similar to other companies in an industry.

9. PLANTS are comprised of collections of processes to produce the products associated with their industry. Individual plants within an industry may employ different combinations of processes but all plants will have some of the processes that are common to the industry.

10. END PRODUCTS incluse only those process outputs that are marketed for use or consumption in the form that they exit from the process. After use, an end product becomes a waste material.

11. INTERMEDIATE PRODUCTS are process output streams that go either to other processes in the same industry in which they are produced, or to other industries where they become secondary raw materials.

12. WASTE MATERIALS are either process outputs that go to a scavenging industry, or are used end products that are disposed or processed to recover reusable constituents.

The relative toxicity of various pollutants is presented in Table 1.2.

Chapter 11 identifies the most significant sources of emissions discussed in the preceding chapters. Appendices A through J present relevant industry statistics.

2.0 CEMENT INDUSTRY

2.1 INDUSTRY BACKGROUND[1]

In 1971, the United States produced an estimated 71 billion kilograms (417 million barrels) of cement, which is 12 percent of world production, and consumed approximately 74 billion kilograms (434 million barrels), which is 13 percent of the world total. About 63.1 percent was used to produce ready-mix concrete, 13.4 percent for concrete blocks, concrete pipes, and other concrete products, 9.4 percent for highway construction, 8.5 percent for building materials, and the remaining 5.6 percent for miscellaneous uses.

In the United States cement is produced in 26 states, principally in California, Pennsylvania, Texas, and Ohio.

In 1971 there were 170 clinker-producing plants, excluding five plants operating only on imported or purchased clinker or that obtained in interplant transfers. Table 2.1 shows the capacities of plants.

Table 2.1 DAILY CLINKER PRODUCTION CAPACITIES OF CEMENT PLANTS IN THE UNITED STATES - 1971[1]

Barrels 170.6 kg (376-pound) per 24-hour period	Number of plants[a]	Kilns[b]	Total capacity	Percent of total capacity
Less than 3,000	6	10	14,206	1.0
3,000 to 6,000	49	98	215,183	15.8
6,000 to 9,000	65	170	473,017	34.6
9,000 to 12,000	28	95	288,817	21.1
12,000 to 15,000	11	37	152,841	11.2
16,000 and over	11	56	222,193	16.3
Total	170	466	1,366,287	100.0

a) Includes white-cement-producing facilities.
b) Total number in operation at plants.

The raw materials used in manufacturing cement are abundant and widely distributed throughout the country. The plants generally locate close to major markets.[2]

Table B-1 in Appendix B lists the companies processing cement, and Table B-2 in Appendix B gives cement production by state.

Currently the industry shows a trend toward larger grinding mills with greater horsepower consumption, probably because of the lower capital costs, lower building space requirements, and better grinding efficiency of larger mills.

In 1971 there were 17 process-control computers designed to control kiln and clinker cooler functions, 15 computers designed to control the raw mix operations, and 8 to control mill loads.

2.2 RAW MATERIALS[3]

Portland cement is made by sintering a mixture of raw materials, one of which is composed mainly of calcium carbonate. Table 2.2 presents the typical sources of raw materials used in the manufacture of portland cement.

Table 2.2 TYPICAL SOURCES OF RAW MATERIALS USED IN MANUFACTURE OF PORTLAND CEMENT[3]

Lime	Silica	Alumina	Iron
Cement rock	Sand	Clay	Iron ore
Limestone	Traprock	Shale	Iron calcine
Marl	Calcium-silicate	Slag	Iron dust
Alkali waste	Quartzite	Fly ash	Iron pyrite
Oyster shell	Fuller's earth	Copper slag	Iron sinters
Coquina shell		Aluminum-ore refuse	Iron oxide
Chalk		Staurolite	Blast-furnace flue dust
Marble		Diaspore clay	
		Granodiorite	
		Kaolin	

The following paragraphs characterize briefly the major raw materials of cement manufacture.

Cement rock - A low-magnesium limestone containing clay. This rock approaches the ideal in relative proportions of lime, alumina, and silica.

Limestones - Composed essentially of calcium carbonate, magnesium carbonate, and some impurities of clay and sand. Many accessory minerals may be present, including iron and manganese oxides; sulfides of the common metals; feldspar, mica, gypsum, quartz, and clay minerals; and bituminous matter.

Marls - Earthy, friable accumulations of calcareous material secreted by plants and animals in lakes and marshes. Marls are important in Michigan and Ohio as raw materials for cement manufacture. Shell marls are found in Virginia, North Carolina, and Florida.

Alkali waste - A waste byproduct of limestone processing accumulated from years of activity plus current output.

Alumina waste - Obtained from alumina plants; may be very high in alumina and iron or in dicalcium silicate.

Sand and Sandstone - Used to correct silica deficiencies. These materials are chiefly quartz but may contain varying amounts of clay and other minerals.

Clay and Shale - Required as additives when limestone contains insufficient alumina and silica. Minerological and chemical contents of both clay and shale vary widely. Some

clays and shales consist essentially of aluminum silicates, whereas others may contain more than 50 percent free silica.

Fly ash - Generated from power stations with direct-fired coal burners. Fly ash composition is fairly close to that of the argillaceous raw materials used in portland cement manufacturing.

Iron materials - Development of cements with low heats of hydration has created a demand for raw materials having high iron content. Those commonly used are pyrite cinders (the calcination product of pyrite) and mill scale (from hot-rolling of ingots, billets, and other forms of steel).

Table 2.3 lists the composition and ignition loss of some typical raw materials.

2.3 PRODUCTS

Cement industries in the United States produce five types of portland cements (in major proportions) and some other cements including masonry, pozzalan, and slag cements (in lesser amounts). The portland cements account for 96 percent of United States cement production. Table 2.4 gives a typical composition of various cements.

2.4 PROCESS DESCRIPTION

Figure 2.1 illustrates the processes in the cement industry. As shown in this figure the following operations are used: mining, size reduction and blending, calcination and finishing operations. The processes within these

Table 2.3 PERCENT OXIDE COMPOSITION OF TYPICAL CEMENT RAW MATERIALS[3]

Type	SiO_2	Al_2O_3	Fe_2O_3	CaO	MgO	Ignition Loss
Limestone	1.2	0.5	0.4	54	0.6	43.2
Limestone	3.2	1.1	0.7	52.4	0.5	42.2
Limestone	5.6	1.0	0.5	50.7	0.8	41.2
Limestone	21.1	1.7	1.0	41.3	0.6	34.1
Limestone	23.6	3.4	1.6	37.4	-	32.7
Cement Rock	8.1	2.3	1.0	46.2	2.5	38.6
Cement Rock	14.2	4.8	1.6	40.2	2.8	34.2
Sand	89.7	2.4	0.7	0.6	0.7	5.9
Clay	67.8	14.3	4.5	0.9	1.2	8.0
Clay	57.4	15.3	6.8	1.1	0.9	13.3
Shale	64.3	15.8	4.0	3.5	2.9	6.1
Shale	63.0	20.0	5 5	0.7	2.7	6.0
Shale	53.8	18.9	7.7	3.2	2.2	8.2
Pyrite Cinders	6.3	2.1	86.7	0.02	0.1	2.6
Pyrite Cinders	13.0	3.8	67.5	1.4	4.5	8.1
Slag	37.8	11.4	1.0	46.1	2.0	-
Marl	6.0	0.6	2.3	49.1	0.4	40.4
Sea Shells (Unwashed)	15.8	4.2	2.7	39.23	1.2	33.8
Sea Shells (Washed)	1.5	0.4	1.2	52.28	0.7	41.8
Fly Ash[a]	51.2	25.6	8.5	1.6	0.9	8.6
Fly Ash[a]	44.0	25.0	15.0	6.0	1.0	9.0
Fly Ash[a]	45.8	13.5	6.6	12.0	2.7	16.9

a)Carbon content may vary between 0.2-15.6.

Table 2.4 TYPICAL COMPOSITION OF VARIOUS CEMENTS[4]

	SiO_2	Al_2O_3	Fe_2O_3	CaO	MgO	SO_3	Loss	Insol
Portland, type I, %	21.3	6.0	2.7	63.2	2.9	1.8	1.3	0.2
Portland, type II, %	22.3	4.7	4.3	63.1	2.5	1.7	0.8	0.1
Portland, type III, %	20.4	5.9	3.1	64.3	2.0	2.3	1.2	0.2
Portland, type IV, %	24.3	4.3	4.1	62.3	1.8	1.9	0.9	0.2
Portland, type V, %	25.0	3.4	2.8	61.1	1.9	1.6	0.9	0.2
Portland white, %	25.5	5.9	0.6	65.0	1.1	0.1	a	a
Natural %	23.7	4.1	0.8	64.5	1.6	2.2	3.0	a
High alumina, %	5.3	39.8	14.6	33.5	1.3	0.1	0	4.8

a) Not determined.

operations and their emissions are described in the following sections.

2.4.1 Mining

(1*) Deposits of cement rock, limestone, and clay are mined and brought together. These materials are often found close together or overlying one another. The limestone is mined from open quarries and also by underground methods. Other raw materials are extracted in the same manner except that clay may be extracted with power shovels.

A significant amount of fugitive dust is emitted and easily spreads throughout the quarry area. Many plants control dust with emulsifying agents.

Trucks are used for haulage.

2.4.2 Size Reduction and Blending

Size reduction is accomplished by crushing, grinding, and blending the ore to obtain the fineness and surface characteristics that will permit efficient chemical reactions among the components. Grinding and blending are done by wet and dry processes.

(2) Crusher - The raw materials are fragmented by crushers and screened. The material is then transferred to a storage area and deposited in separate compartments for cement rock, limestone, shale, and others.

Particulate is emitted from crushers, storage areas, receiving bins, and elevators.

---

* Numbers refer to corresponding processes in Figure 2.1.

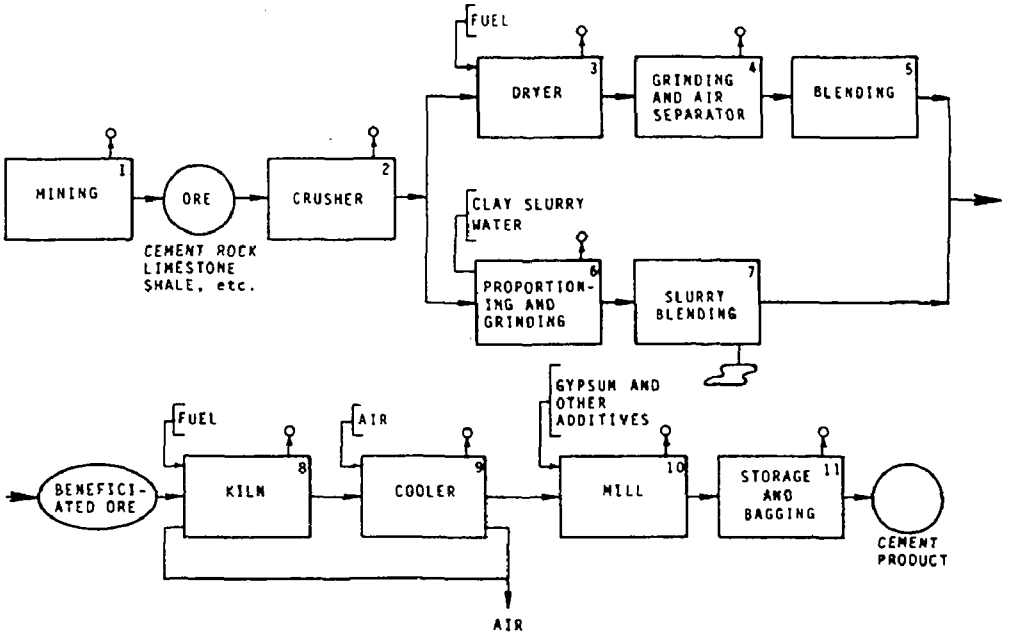

Figure 2.1 Cement industry

Storage bins are filled by bucket elevators or by pneumatic conveyors. The bucket elevators used for cement service are totally enclosed and fed by screw conveyors. Leakproof conveyors minimize dust problems.[5]

2.4.2.1 Dry Process - In the dry process, the free moisture content of crushed material is reduced to less than 1 percent moisture before and during grinding. Process steps are drying, grinding and separation, and blending.

(3) Dryer - The limestone, cement rock, and shale are dried to remove free water. In the heating process no flames impinge directly on the material. Fuels are oil or natural gas.

Emission gases contain dust of limestone, shale, or other materials being dried. The concentration of dust in the exit gases is related to the velocity of the gases and the quantity and size of the fine particles. Dust concentrations of 11.5 to 23 gm/m^3 (5 to 10 grains per cubic foot) of rotary dryer discharge gas can be expected.[2]

(4) Grinding and Separation - A proportioned amount of dry product is ground to powder in one or several stages by one of a variety of mills. Fines are separated from the ground material by flowing air cross current to the direction of flow of the fines. The oversize fraction is recycled for additional grinding. Conveyors are used for material transfer.

About 33.5 grams of particulate is emitted per kilogram (67 lb/ton) of cement from dryers and grinders.[6]

(5) Blending - The finely ground material is blended to a prescribed composition and stored for calcination in kilns.

2.4.2.2 Wet process - Slurry is prepared by adding water to the initial grinding. The process sequences are proportionating and grinding followed by slurry blending.

(6) Proportionating and Grinding - The raw materials are carefully proportioned and passed to a grinding mill. Water is added to the raw materials prior to grinding for slurry formation.

For effective handling, the water requirement of the slurry is reduced by addition of a very small amount (0.05 to 0.10 percent) of an agent such as waste sulfite liquor, sodium carbonate, sodium silicate, sodium tri-polyphosphate or tetra sodium pyrophosphate.

Particulate is generated from proportionating equipment. Since grinding is a wet operation, emissions from the process are negligible. Emissions from the overall operation are about 12.5 grams of particulate per kilogram (25 lb/ton) of product.[5]

(7) Slurry Blending - Excess water of the ground material may be reduced by filtration or by a series of hydroseparators, classifiers, and thickeners. Sometimes the separated size fractions are treated by flotation in a series of cells with fatty acids and a frothing agent to remove undesirable constituents such as mica, quartz, pyrite, or feldspar and increase the CaO concentration.

The final slurry product is thoroughly mixed and blended for calcination.

The process involves no known air pollution problems. The water waste from the filtration or flotation is rejected.

2.4.3 Calcination

The blended material from either the dry or wet process is calcined in a kiln at high temperature. A variety of kilns are used.

(8) Kiln - The material is fed to the kiln. Heat is provided by burning oil, gas, or pulverized coal. Combustion air is mixed with preheated air from cooling the clinker. A maximum temperature of 1595°C is maintained inside the kiln. As the charge is heated, organic matter is burned out and sulfates are decomposed, with liberation of CO_2 and formation of CaO and MgO. In the burning process, about one-third of original dry weight of the feed is lost. In the hot zone, about 20 to 30 percent of the charge is converted to liquid and it is through this medium that the chemical reactions principally proceed. The product of the calcination, "cement clinker," comes out from the lower end of the kiln and its temperature is quickly reduced in a cooler.

Fuel requirements are about 890 kcal/kg (1600 BTU/lb) of clinker for vertical kiln and about 1480 kcal/kg (2660 BTU/lb) of clinker for rotary kiln.[4] Wet-process kilns are generally longer than dry-process kilns, since one-fourth of the length must be used for evaporation.

The calcining kiln is the major source of particulate emissions in cement plants. About 83.5 grams of particulate

per kilogram (167 lb/ton) of cement are emitted.[6] The kiln dusts have been reported variously as harmful, harmless, or indirectly beneficial. Research in Poland shows that the dust emissions from kilns contain potassium in the form of chlorides, fluorides, and silicates of various composition. This is because the K_2O content of raw material combines with free anions of decomposition products of raw materials (aluminum silicates in the crude clay) at high temperature. Analysis has established that the cement dust can be used as a fertilizer.[7] Table 2.5 gives a size distribution of dust emitted from the kilns.

In addition to the dust, the average kiln also produces approximately 5.32 grams of hot gases per gram of cement. They exit the kiln at 760°C.[8] Compounds in the dust and gas phases include SiO_2, Al_2O_3, TiO_2, P_2O_5, Fe_2O_3, Mn_2O_3, CaO, MgO, SO_3, K_2O, Na_2O, CO_2, C, and H_2O. They also contain nitrogen, oxygen, and a negligible amount (except during start-up) of carbon monoxide. The sulfur dioxide content of gases is very low.[9] It has been concluded that the occurrence and magnitude of an SO_2 emission depends on the presence of the alkali in the gas phase. If the waste gases contain SO_2 then the amount emitted may be reduced only when conditions are created for a reaction between SO_2 and $CaCO_3$. This reaction may take place in the presence of oxygen at 400 to 500°C, to form $CaSO_4$. Observations of kilns show that the amount of SO_2 emitted may be reduced by drying the raw material before treating it in the kiln.

Table 2.5 SIZE DISTRIBUTION OF DUST EMITTED FROM KILN OPERATIONS IN CEMENT MANUFACTURING WITHOUT CONTROLS[10]

Particle size, μm	Kiln dust finer than corresponding particle size, %
60	93
50	90
40	84
30	74
20	58
10	38
5	23
1	3

At equilibrium, the entire charge of the fluoride would be evolved as gaseous HF (at 1480°C) and would subsequently react with the dispersed limestone and high free lime in the kiln to form CaF_2. Fluorine is partially driven out of raw materials and fuel in the kiln. The kiln emissions do not contain fluorine gas but contain fluoride solids, which can be removed by electrostatic precipitators. If raw materials contain excess CaO, the fluorine is converted to CaF_2.[11] The gas stream in a cement kiln also contains alkali sulfates, alkali chlorides, and calcium fluoride formed by a reaction in the kiln gas after vaporization. These compounds may react with or precipitate on the material in the colder parts of the kiln.[12]

The alkali materials present in the raw materials are volatilized and subsequently condensed to form fine particulate matter. One advantage in using an electrostatic precipitator is that the smaller particle sizes are more difficult to collect, and a higher percentage of these particles are collected primarily in the final stages of the precipitator. This is desirable since only a limited amount of alkali can be recycled to the kiln (to maintain the clinker within acceptable alkali limits). Since this dust is difficult to collect, a disproportionately higher amount of alkali is emitted. The alkali-rich dust which is collected is often disposed of in abandoned quarries.

The oil combustion products in the emissions are 2.1 grams S, and coal combustion products are 3.45 grams per kilogram (6.8 lb/ton) of cement produced, where S denotes sulfur content of fuel.

Cement plants can also release appreciable quantities of mercury to the atmosphere.[13]

Table 2.6 gives typical emission data from five cement kilns and coolers in the United States.

(9) Cooler - The temperature of hot clinker is reduced immediately and the clinker sent to storage for subsequent grinding. Often integral coolers are attached to the kiln below the burning zone. In other designs the clinker is carried on a perforated grate through which air is forced. In either case air is the cooling agent, and particulate is emitted. Only 10 to 15 percent of dust particles from a cement clinker-cooler are below 10 microns diameter.[2]

Cooled clinker is conveyed to storage by bucket conveyors.

Detailed data on emissions from a typical cement clinker-cooler are presented in Table 2.6.

2.4.4 Finishing Operations

(10) Grinding Mill - Gypsum is added to the clinker in prescribed proportions for making portland cement. In production of cements other than portland, different materials are added. For example, limestone is added to make masonry cement and slag is added to make slag cement. The proportionated

Table 2.6 SUMMARIES OF TYPICAL EMISSION DATA FROM FIVE U.S. CEMENT KILNS AND COOLERS

	Plant 1 Kiln			Plant 2 Clinker Cooler			Plant 3 Kiln		
Run No.	1	2	3	1	2	3	1	2	3
Date	4/29	4/29	4/30	5/18	5/18	5/18	8/26	8/27	8/27
Stack Flow Rate, Nm^3/sec dry (21°C, 76 cm Hg)	24.1	23.8	23.6	48.8	47.1	48.0	25.4	25.3	24.6
% Water Vapor, % vol	2.0	2.1	2.4	1.60	1.73	1.65	41.2	41.2	39.8
% CO_2, vol % dry	7.5	16.8	16.8	0.03	0.03	0.03	14.9	21.0	21.0
% O_2, vol % dry	15.5	16.8	16.8	20.95	20.95	20.95	8.6	4.5	4.5
SO_2 Emissions, ppm dry	295	396	196	--	--	--	--	--	--
NO_x Emissions, ppm dry	147	292	150	--	--	--	--	--	--
Particulates									
Front Half Catch									
gram/Nm^3 dry	0.0218	0.0269	0.0248	0.00412	0.00766	0.00522	0.148	0.190	0.171
gram/m^3 at stack conditions	0.0161	0.0197	0.0180	0.00336	0.00606	0.00412	0.0507	0.0721	0.0648
grams/sec	31.5	38.4	35.2	11.7	21.2	14.6	22.6	28.9	25.2
Total Catch									
gram/Nm^3	0.0464	0.0423	0.0402	0.00917	0.00142	0.00856	0.2279	0.3642	0.2773
gram/m^3 at stack conditions	0.0342	0.0310	0.0291	0.00748	0.01120	0.00668	0.0842	0.1384	0.1052
grams/sec	67.2	0.2	56.8	26.6	40.1	24.6	34.8	55.3	41.0
gram/kg kiln feed	0.101	0.0870	0.0875	0.0284	0.0422	0.0255	0.386	0.650	0.505

Table 2.6 (cont) Summaries of Typical Emission Data from Five U.S. Cement Kilns and Coolers

	Plant 4 Clinker Cooler			Plant 4 Kiln		Plant 5 Clinker Cooler			Plant 5 Kiln		
Run No.	1	2	3	1	2	1	2	3	1	2	3
Date	3/18	3/19	3/19	3/24	3/24	2/25	2/25	2/25	2/26	2/26	2/26
Stack Flow Rate, Nm^3/sec dry (21°C, 76 cm Hg)	45.27	44.99	44.58	50.23	48.92	9.165	8.164	8.930	26.04	25.55	24.49
% Water Vapor, % vol	0.5	0.4	0.3	29.3	31.5	2.03	1.91	1.86	30.4	28.9	29.0
% CO_2, vol % dry	0.03	0.03	0.03	17.0	17.0	0.03	0.03	0.03	10.5	10.5	10.5
% O_2, vol % dry	20.95	20.95	20.95	8.0	8.0	21.0	21.0	21.0	13.0	13.0	13.0
Particulates											
Front Half Catch											
gram/Nm^3	0.1174	0.1306	0.1597	0.2137	0.2434	0.059	0.064	0.046	0.124	0.204	0.373
gram/m^3 at stack conditions	0.1036	0.1178	0.1347	0.0801	0.8809	0.048	0.053	0.037	0.055	0.089	0.165
grams/sec	31.8	35.2	42.7	64.7	71.4	32.8	31.4	24.5	19.3	31.7	54.8
Total Catch											
gram/Nm^3 dry	0.2686	0.1354	0.1629	0.2325	0.2707	0.064	0.071	0.050	0.137	0.238	0.396
gram/m^3 at stack conditions	0.110	0.1231	0.1476	0.0869	0.0982	0.053	0.057	0.041	0.059	0.105	0.174
gram/sec	34.0	36.6	43.6	70.3	79.4	35.2	34.8	27.0	21.5	36.4	58.0
gram/kg kiln feed	0.218	0.236	0.275	0.446	0.506	0.056	0.056	0.044	0.352	0.60	0.955
NO_x Emissions, ppm dry	--	--	--	--	--	--	--	--	179	179	179

material is ground in the same kind of mill in which raw materials are ground. Power requirements of typical cement plant grinding mills are about 105 to 117 KWH/ton of cement.[15]

Particulate emissions result from this operation. Dust collected from mill systems, raw or finish transfer points, and conveyors present only minor air pollution problems as these are essentially closed systems and dust is returned into the unit from which it was collected.[2]

Gypsum is brought in by trucks and conveyed from storage and grinding mill by bucket and belt conveyors.

(11) Storage and Bagging - Fine materials are separated from the coarse materials in the mill discharge. Cement of the proper fineness is sent to storage, and the oversize materials are returned to the mill for regrinding. Particulate emissions occur in significant amounts. The fine materials are transferred either in bags or in bulk by rail or truck. Cement handling entails a potential for considerable particulate emissions; high value of cement products, however, generally ensures efficient control.

Table 2.7 summarizes the metal content of particulate emissions from cement plants.

Table 2.7 RANGE OF TRACE MATERIALS IN PARTICULATE FROM CEMENT PLANTS[16]

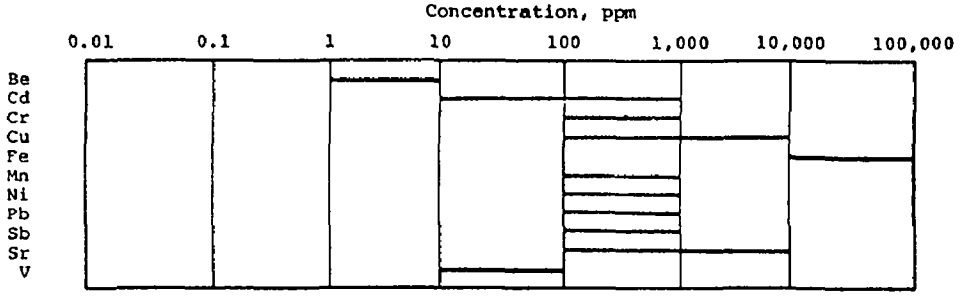

2.5 MAJOR POLLUTANT SOURCES

The main source of pollution in the cement industry is the kiln. Other sources are dryers, grinders, and material handling.

° Kiln - About 83.5 grams of particulate are released (uncontrolled) from processing one kilogram of cement (167 lb/ton). Almost all plants control particulate emissions to a relatively high extent. In 1970, 95 percent of plants applied control equipment operating at an overall efficiency of 95 percent. The resulting emissions were 675,900 metric tons of particulate from a production of nearly 75 million tons of cement. As shown in Table 2.5, the particulate contains the following elements in trace quantities: Be, Cd, Cr, Cu, Fe, Mn, Ni, Pb, Sb, Sr, and V. According to some reports, mercury may be present in emissions. Most of the emitted particulate matter is smaller than 10 microns in size.

Plants were originally built away from highly populated areas, but this has been negated by increasing urban sprawl.

REFERENCES FOR CHAPTER 2

1. Brown, B.C. Cement, In: Minerals Year Book, Vol. 1, U.S. Bureau of Mines, 1971.

2. Kreichelt, T.E., D.A. Kemmitz, and S.T. Cuffe. Atmospheric Emissions from the Manufacturing of Portland Cement.

3. Industrial Minerals and Rocks. Seeley W. Mudd Series. American Institute of Mining, Metallurgical and Petroleum Engineers. New York, 1960.

4. Kirk-Othmer. Encyclopedia of Chemical Technology. New York, John Wiley and Sons, Inc., Second Edition. 1969.

5. Dannielson, J.A. Air Pollution Engineering Manual, Air Pollution Control District County of Los Angeles, Second Edition, 1973.

6. Vandegrift, A.E. and others. Particulate Air Pollution in the United States. Journal of Air Pollution Control Association, Vol. 21, No. 6, June 1971.

7. Oleksynowa, K. Chemical Characteristics of Waste Cement Dusts and their value for agriculture, Cement, WAPNO, GIPS 11/20, (3) 62-4, 1965. Text in Polish.

8. Doyle, C.D. and S.A. Reigel. Cooling hot gases from dry process cement kilns. Pit and Quarry. July 1971.

9. Compilation of Air Pollution Emission Factors. U.S. Environmental Protection Agency, Raleigh, North Carolina. Publication Number AP-42. April 1973.

10. Koehler, W. Present Position in Combating Air Pollution and Nuisance in the Cement Industry. Text in German. November 1969.

11. Sprung, S., and H.M.V. Seebach. Fluorine balance and Fluorine Emissions from Cement Kilns. Text in German. Zement-Kalk-Gips (Wiesbaden), 21 (1): 18, January 1968.

12. Locher, F.W. and others. Reactions Associated with the Kiln Gases. Cyclic Processes of Volatile Substances, Coatings, Removal of Rings, 1-12, January 1972.

13. Weiss, Herbert V., Minoru Koide, and Edward D. Goldberg. Mercury in a Greenland Icesheet. Evidence of recent input by man. Science, 174 (4010): 692-694, November 1971.

14. Standards of Performance for New Stationary Sources.

15. Bergstom, J.H. Cement Plants of the 60's. Rock Products Mining and Processing. May 1964.

16. Lee, R.E., Jr. and D.J. Von Lehmden. Trace Metal Pollution in the Environment. Journal Air Pollution Control Association. Vol. 23, No. 10. October 1973.

3.0 CLAY PRODUCTS

3.1 INDUSTRY BACKGROUND

Clay is a hydrated aluminum silicate rock composed of very fine particles. When suitably crushed and pulverized, it becomes plastic when wet, rigid when dry, and when fired becomes vitrified.

A total of approximately 52 million metric tons of clay was produced in the United States in 1971.[1] Every state except three (Alaska, Rhode Island, and Vermont) produced some clay. The leading producers were Georgia, Texas, Ohio, North Carolina, Alabama, and California. Table C-1 of Appendix C lists principal producers of cement and Table C-2 gives clay production by state.

The basic categories of clay products are kaolin, ball clay, fire clay, bentonite, fuller's earth, and miscellaneous or common clay. In 1968, approximately 50 percent of the kaolin production was by four major firms; a total of 42 firms operating 57 mines accounted for all of the kaolin production. Ball clay was produced by 11 firms operating 14 mines. Bentonite was produced by 25 firms operating 47 mines. The majority of fuller's earth production was by 8 firms operating 10 mines. Numerous mines throughout the country supply common clay. Table C-2 of Appendix C lists the principal producers of clay in the United States.

The projected demand for clay in the year 2000 is between 123.8 and 184.6 million metric tons.[2] Reserves appear ample to meet the projected needs.

Although very few major advances have been made in clay mining and processing technology, the technological advances in earth-moving methods, equipment, and automation of processing methods have been very beneficial to the clay processing industry.

3.2 RAW MATERIALS

The U. S. Bureau of Mines classifies clay deposits according to the six product categories, that is, kaolin, ball clay, fire clay, bentonite, fuller's earth, and miscellaneous or common clay.

Each clay deposit has as the major component one of the following clay minerals: kaolinite, halloysite, montmorillonite, palygorskite (or attapulgite), or illite. Some deposits may have one or more of these minerals as a minor component.[3] All clays also contain various amounts of impurities such as quartz, mica, feldspar, and iron minerals.

Kaolin, ball clay, and fire clay are chiefly composed of kaolinite. Bentonite is composed mainly of montmorillonite. Fuller's earth is composed of montmorillonite or palygorskite or both. Miscellaneous clay is composed mainly of illite, although some deposits have kaolinite and montmorillonite as the major components.

Kaolinite is a mineral composed of approximately 39.50 percent Al_2O_3, 46.54 percent SiO_2, and 13.96 percent H_2O. The

structural formula is $(OH)_8Si_4Al_4O_{10}$.[3] Kaolin is approximately the mineral kaolinite. Ball clay consists mainly of kaolinite and sericite micas. Fire clay is composed of kaolinite and usually other materials such as diaspore, ball clay, bauxite clay, and shale. Kaolin is mined primarily in Georgia, with South Carolina, Ohio, Arkansas, and Alabama being other major contributors. Ball clay is mined largely in Tennessee, followed by Kentucky, Mississippi, Texas, Maryland, California, New York, and New Jersey. Fire clay is produced in 22 states, the outputs coming from Missouri, Ohio, Pennsylvania, and Alabama.

Montmorillonite has the structural formula of $(OH)_4Si_8(Al_{3.34}Mg_{0.66})O_{20}$.[3] Bentonite (composed primarily of montmorillonite) is mined mainly in Wyoming, with small amounts also mined in Montana and South Dakota. The type found in those deposits is the high-swelling or sodium bentonite. Low-swelling or calcium bentonite is found in Mississippi, Alabama, and Texas, among others. A small portion of the fuller's earth mined is made up of predominately montmorillonite. This type of fuller's earth is mined primarily in Mississippi, Texas, and Utah.

Palygorskite (or attapulgite) has the structural formula of $(OH_2)_4Mg_5Si_8O_{20}:4H_2O$.[3] It is the major component of the fuller's earth in Georgia and Florida, which constitutes most of the fuller's earth nationwide.

Illite has the approximate structural formula of $(OH)_4K_2(Si_6 \cdot Al_2)Al_4O_{20}$.[3] It is the predominant mineral in miscellaneous

clay and is mined in every state except Alaska, Rhode Island, and Vermont. The leading states in the mining of illite are Texas, North Carolina, Ohio, California, Alabama, and Michigan.

Table 3.1 presents an analysis of clay minerals from different areas in the United States and Table 3.2 gives a detailed spectrographic analysis of bentonite clay.

3.3 PRODUCTS

The six basic products of clay processing have been mentioned. The main finished products of the clay industry are porcelain, refractory, brick, tile, and pottery.

One kaolin firm produces bauxite as a by-product and another, flake mica. Two produce silica as a coproduct. Clay is also produced occasionally along with sand, gravel, and stone.

3.4 PROCESS DESCRIPTION

Figure 3.1 illustrates the clay industry segment. The processes are mining, beneficiation, and production of the finished product. These processes are discussed in the following section.

3.4.1 Mining

*(1) Most clay deposits are mined by open-pit methods. As of 1968, only about 2-1/2 percent of the clay production was from underground mines. A portion of kaolin is produced by hydraulic mining. Open-pit mining involves the use of such equipment as drag-lines, power shovels, scraper-loaders, and trucks for transport.

Water pollution is a major problem in mining of clay.

---

*Numbers refer to corresponding processes in Figure 3.1.

Table 3.1 ANALYSES OF CLAY MINERALS[4,5]

Composition (Pct)	1	2	3	4	5	6	7	8	9	10	11	12	13	14	15	16*
SiO_2	44.90	59.92	82.45	47.92	90.00	45.78	49.56	53.12	68.62	54.64	57.62	42.68	53.96	45.44	38.07	61.47
Al_2O_3	38.35	27.56	10.92	14.40	4.60	36.46	15.08	18.72	14.98	14.62	24.00	38.49	29.34	38.52	9.46	22.17
Fe_2O_3	0.43	1.03	1.08	3.60	1.44	0.28	3.44	1.12	4.16	5.69	1.90	1.55	0.98	0.80	2.70	4.32
FeO						1.08					1.20					
CaO		Tr	0.22	12.30	0.10	0.50	1.08	1.40	1.48	5.16	0.70		0.37	0.08	15.84	0.14
MgO	Tr	Tr	0.96	1.08	0.10	0.04	7.84	6.92	1.09	2.90	0.30	0.08	0.30	0.08	8.50	2.73
K_2O	0.28	0.64		1.20	Tr	0.25		5.72	3.36	5.89	0.50	0.49	0.28	0.14	2.76	0.03
Na_2O	0.14	0.64		1.50	Tr	0.25		Tr	3.36	5.89	0.20	0.28	0.12	0.66	2.76	3.18
TiO_2	1.80		1.00	1.22	0.70	0.25	0.40					2.90	1.64	0.16		0.09
H_2O	14.20	9.7	2.40	4.85	3.04	13.4	22.96	12.04	3.55	3.74	10.5	14.07	12.82	13.6	2.49	6.02
Moisture		1.12			3.04	2.05			2.78	0.85	2.7					
CO_2				9.50						4.80					20.46	
SO_3				1.44[b]						0.35	0.35		0.03			

a) Also 1.34 organic matter.
1) Typical sedimentary kaolin, S.C., Ga., Ala.
2) Flint fire clay, Salineville, Ohio.
3) Siliceous clay, Rusk, Texas.
4) Shale clay, Ferris, Texas.
5) Sandy brick clay, Comesneil, Texas.
6) Washed kaolin, Webster, N. C.
7) Bentonite, Otay, Calif.
8) Potash-bearing bentonite, High Bridge, Ky.
9) Loess, Guthrie Center, La.
10) Brick shale, Mason City, La.
11) Plastic fire clay, St. Louis, Mo.
12) Flint fire clay, near Owensville, Mo.(81).
13) Ball clay, Tennessee.
14) Kaolinite, Roseland, Va.(72).
15) Brick clay, Milwaukee, Wis.
16) Bentonite, Clay Spur, Wyoming.

* For spectrographic analysis of bluish-gray and olive green bentonite of Clay Spur, (from same pit) Wyoming. See Table 3.2, where the oxides of minor elements are listed.

Table 3.2 SPECTROGRAPHIC ANALYSIS OF BENTONITE FROM CLAY SPUR, WYOMING[6]

Oxide	Bentonite	
	Bluish-gray	Green
K_2O	0.3	0.2
Li_2O	0.01	0.008
ZrO_2	0.03	0.03
TiO_2	0.05	0.05
MnO	0.001	0.001
BaO	0.003	0.003
B_2O_3	0.002	0.002
Y_2O_3	0.006	0.006
Yb_2O_3	0.0008	0.0008
MoO_3	0.001	0.0008
PbO	0.003	0.003
BeO	0.0004	0.0004

Note: Minor elements looked for but not found were Zn, Cd, Cu, Bi, As, Sb, Sn, Ag, Au, Pt, Pd, Re, Tl, In, Ge, V, Cr, Cb, Ta, W, Ni, and Co.

Samples of bentonite from deposits of the marine cretaceous formation of this district and from the surrounding region are, weakly radioactive. This bentonite was found to contain 0.001% of uranium.

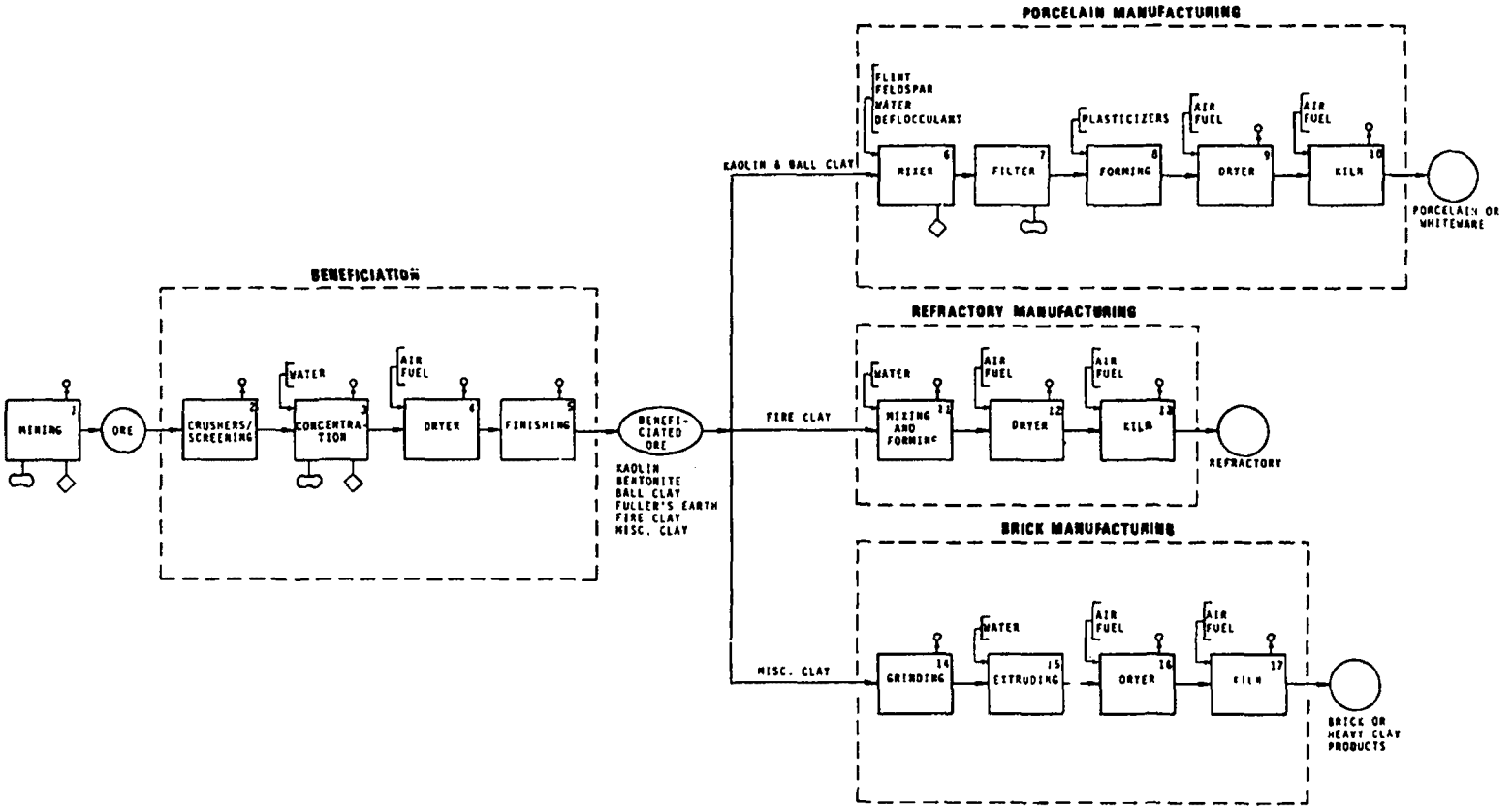

Figure 3.1 Clay industry

Ground water percolates up through the earth, picks up clay as suspended solids, and runs off to a stream. This source of pollution may be controlled by providing a sump in the mine. The excess water is then pumped to a holding basin and the waste is settled out.

Kaolin has the highest ratio of waste to clay, about 7 to 1. Kaolin mining spoils are a mixture of sands and clays, including nonmarketable kaolin. The kaolin industry generates about 27 million metric tons per year of solid waste. Bentonite mining in Wyoming generates about 4.5 million metric tons, fuller's earth mining in the Florida-Georgia area produces over 1.8 million metric tons, and ball clay mining accounts for less than 0.9 million metric tons of waste per year.

By comparison, the production of miscellaneous clay creates the least waste (waste-to-clay ratio of about 0.25 to 1); however, because much of the miscellaneous clay mining is done near urban or populated areas, the waste and pollution generated by these operations may cause significant problems.

Clay is most commonly transported from the mine by trucks. Other methods involve conveyor belts, or rail cars, or pipelines in the case of hydraulic mining.

Fugitive dust from the mined clay is normally not a problem, since the clay may contain 25 to 30 percent moisture and is not readily windblown. Fugitive dust from stockpiled clay may be a problem, as with bentonite, which is sometimes stockpiled to let it weather. The emission factor for a clay stockpile

is 17 grams per kilogram (34 lb/ton) of product.[7]

3.4.2 Beneficiation

Because the physical properties and impurities of clays vary greatly, it is often necessary to upgrade the clay by beneficiation.

(2) Crushing and Screening - Initial crushing and screening are done to break up lumps and agglomerates of the raw clay. This process involves no chemical changes. Crushing is done by conventional methods, with jaw or gyratory crushers, cone crushers, impact mills, attrition mills, or roller mills. The clay usually is first passed through a large screen to remove material too large for the primary crusher.

Since crushing is carried out at ambient temperatures and pressures, there are no emissions of hazardous materials. A sodium salt may sometimes be added to bentonite clay before drying.

If the moisture content of the raw material clay is high, it may be partially dried before crushing. If the material is uniform in size, crushing may not be needed and the clay is sent directly to the next process.

After crushing, miscellaneous clay is in usable form and needs no further beneficiation. It may be used in manufacture of light-weight aggregate or cement or be formed into heavy clay products such as brick.

An uncontrolled grinding process in ceramic clay manufacturing generates about 38 grams particulate per kilogram (76 lb/ton)

input to the process. If the process is controlled by a cyclone, emissions are reduced to 9.5 grams per kilogram (19 lb/ton); with a cyclone and scrubber the emissions are negligible.[7] If scrubbers are used, the scrubbing liquid must be treated to prevent water pollution.

Material is transferred to the next operation by belt or screw conveyor. Particulates may be emitted at the transfer points.

(3) Concentration - Concentration involves the removing of impurities and further upgrading of the clay by physical processes.

In the case of kaolin, water and clay are mixed in a blunger to form a "slurry". Coarse materials are removed by settling and other impurities by flotation. Iron compounds and mica are removed from the slurry by magnetic separation. Particle size classification may also be done at this time by centrifuging or gravity settling. The slurry is then dewatered by centrifuges, filter presses, or vacuum filters. Air pollution is not a problem in these operations, but the water removed in the dewatering steps must be treated for dissolved and suspended solids. Solid wastes are also evolved. In processing of kaolin, about 40 percent of the material is discarded. About 30 percent of all fuller's earth material that is beneficiated is discarded. These are the only two clays that generate significant solid waste in the beneficiation process.[2]

In wet grinding processes the clay is mixed with water as it is ground. Sands may settle out, and the remaining slurry is classified as to particle size and then dewatered. If dry grinding is done, the process may generate air pollution.

Concentration is not required for all clays, but is done only when a very pure product, such as kaolin, is required.

(4) Dryer - Drying removes the remaining moisture and any volatile matter present in the clay. Rotary drums, apron dryers, or spray dryers are used. The dryer is fired by natural gas, oil, coal, or wood.

Clay direct from the mine, crushed or uncrushed, may be dried to remove moisture. Clay that has been made into a slurry, after it has been dewatered, is sent to the dryer. The drying process involves driving off free water and dehydrating the hydrated clay molecules. Dehydration occurs from 150 to 650°C.[5]

When dry kaolin and fire clay are calcined at high temperatures carbon dioxide is often driven off. Calcination temperatures range from 600 to 900°C. Oxidation of ferrous iron and organic matter in the clay take place from 350 to 900°C.

In addition to the normal products of combustion, clay particles are entrained by the gas and carried from the dryer. The emission factor for the drying of ceramic clay is 35 grams of particulate per kilogram (70 lb/ton) of input to the dryer.[7] The exhaust gas also contains some organics and ferrous oxide. Hydrogen fluoride is emitted from the dryer and from the firing kilns. Acid gases formed by combining small amounts of fluoride and silicate into fluosilicic acid may also be emitted from the dryers.

The material is often conveyed to the next process by belt conveyors, with possible particulate air pollution discharge

at the transfer points.

(5) Finishing - Finishing operations involve physical changes of the clay to prepare it to final specifications.

The first step involves grinding the clay to the desired size. Fine grinding is done in a hammer, roller, ball, or impact mill. As the clay is ground, it is continuously screened and sized to meet product specifications. Screens and air flotation are also used for particle size classification. Some special additives are mixed with the clay at this point.

The clay is then prepared for shipping by bagging or it is shipped as dry bulk in rail cars. Some kaolin is shipped in slurry form in tank cars. Since high temperatures are not involved in these processes no hazardous materials are emitted. Particluate is emitted from grinding and screening operations and during bagging or bulk loading.

The beneficiated ores of kaolin, ball clay, fire clay, bentonite, fuller's earth, and miscellaneous clay are then used in manufacture of final products, described in the following sections.

3.4.3 Porcelain Manufacturing

(6) Mixer - The raw materials, kaolin, ball clay, flint, and feldspar are mixed and agitated with water to form a slurry, which is then filtered and run through a magnetic separator. The only pollution evolved in this process is the solid waste removed by the magnetic separators and screens. Since this process is operated at ambient temperatures and the clay moves to the

next process in a slurry, there is no fugitive dust potential.

(7) Filter - A filter press is often used to remove the water from the slurry. The slurry is forced onto a filter medium and solids are collected as a cake on the filter surface. Another dewatering method is vacuum filtration. The water removed in this process is a potential source of water pollution. Transport of the filter cake to the forming operation is not likely to cause fugitive dust since the clay contains sufficient moisture to prevent dust emissions.

(8) Forming - The clay from the filter is form-pressed either by extrusion or slip casting. Plasticizers in the form of gums, starches, polyvinyl alcohol, or waxes may be added at this point. Water may be added to achieve the desired plasticity. A vacuum of approximately 74 centimeters (29 inches) of mercury is maintained in the extruder to remove any pockets of air and to make the clay denser. The clay is then forced out the extruder by an auger, cut to the specified length, and formed into the desired shape by jiggering. These processes are normally done at ambient temperatures.

In slip casting, the slurry (or slip) is poured into a porous plaster of paris mold. Water is absorbed into the mold, and the solid particles are deposited on the mold interior.

The forming process, either by extrusion or slip casting, is a negligible source of pollution. The formed ware is sent to the dryer.

(9) Dryer - The clay ware in the dryer is heated slowly so as to prevent cracking when it enters the kiln. Temperatures in the

dryer range from 50 to 200°C.[4,5] The dryers are heated by the exhaust gases from the kilns, or fueled by natural gas, oil, or coal. Emissions from dryers are mainly particulates, with possibly some ferrous oxides, fluorides, organics, or organic acids.

The ware is sprayed with a glaze before or after the dryer, depending on the operation. Spraying may generate small amounts of particulate emissions. The ware goes directly to the kiln after drying.

(10) Kiln - In the kiln the ware is fired and vitrified. Tunnel kilns are the most common; periodic kilns are also used. Porcelain or whiteware products are fired at temperatures between 1200 and 1500°C.[8] Firing time is generally from 40 to 270 hours.[10] The kiln is fired with oil, natural gas, or coal.

Emissions from firing include products of combustion and fluorine emissions in the form of hydrogen fluoride, a hazardous material. If the clay contains sulfur, additional SO_2 is given off in excess of that formed by combustion. Any appreciable amount of organic matter is volatilized and combusted, forming a small amount of black smoke. Acids could be formed by the combining of fluorine and silicate into fluosilicic acid.

The porcelain or whiteware product removed from the kiln requires no further processing.

3.4.4 Refractory Manufacturing

Refractories are materials that maintain their physical shapes and chemical identities when subjected to high temperatures.

A wide variety of refractories is manufactured from different clays. Although all clays are used for refractory materials, fire clay predominates; bentonite, kaolin, and ball clay are used in lesser amounts. Following are descriptions of the processes for manufacturing refractories.

(11) Mixing and Forming - Mixing and tempering are often done in a dry-pan muller-mixer, which thoroughly mixes all raw materials and distributes any added water. This operation promotes plasticity while reducing the amount of entrapped air. Most refractory brick is formed by dry or hydraulic pressing of damp mix in a mold. Sometimes the brick is deaired by application of a vacuum to the surface of the brick through small openings in the press plates.

Although this process is carried out at ambient temperatures and emissions are minimal, some particulate emissions may be given off during the dry mixing.

(12) Dryer - Very large refractories are dried on a temperature-controlled hot floor, heated by steam or air ducts. Smaller shapes are generally processed in a tunnel dryer, which is heated by waste heat from the kiln, or by burning of natural gas, oil, or coal. The dryer may be humidity controlled. Dryer temperatures range from 50 to 200°C.[9]

Emissions from the dryer are mainly particulate, with the possibility of some ferrous oxides, fluorides, or organics; the latter are not likely because of the relatively low operating temperatures. From the dryer, the refractory goes to the firing

kiln.

(13) Kiln - Refractories are normally fired in a tunnel kiln. Periodic kilns are used to a lesser extent. In the kiln the fire clay is vitrified at temperatures ranging from 1200 to 1900°C.[5] Firing times range from 40 to 270 hours.[10]

Emissions are the same as those from firing of porcelains: products of combustion, hydrogen fluoride, and SO_2, the latter two depending on the amounts of fluorine or sulfur in the clay. Volatilization and combustion of organic matter forms some black smoke. A small amount of fluosilicic acid may be emitted.

When the fired refractory is taken from the kiln, it may need some grinding to achieve the desired size and surface finish. Grinding is a potential source of additional particulate emissions.

3.4.5 Brick Manufacturing

Miscellaneous clay is most commonly used in manufacturing structural or heavy clay products; the brick manufacturing operation shown here is typical.

(14) Grinding - Dry-pan crushers are often used to reduce the size of the clay particles in preparation for extrusion. The grinding is usually dry and at ambient temperatures and thus is a possible source of particulate emissions. The emission factor for all raw material handling, dryers, and grinders in brick manufacturing is 48 grams (96 pounds/ton) of brick produced. When ground clays are held in storage before extrusion, the emissions from storage are about 17 grams per kilogram (34 lb/ton) of brick produced.

Since the clay is finely ground, and relatively dry as it is conveyed to the extruder, particulate emissions may occur

at the transfer point.

(15) Extruding - In this process, the clay is mixed with water and forced through an opening by an auger. A vacuum is drawn in the extruder to remove air from the clay. As the clay is extruded, it is cut off in block form then sent for drying. Extrusion causes no known pollutant emissions.

(16) Dryer - To remove moisture before firing, brick is dried in various ways: outdoors, in sheds, or in tunnel kilns. Tunnel kilns are the most common. Temperatures in kilns for drying brick range from 50 to 200°C.[9] The dryers may be heated by waste heat from the kilns, or fired by natural gas, oil, or coal.

The major pollutants from dryers are particulate emissions. Some emission of ferrous oxides, fluorides, or organics may occur, but these are not likely because of the relatively low operating temperatures. No emissions are evolved in the transfer of brick from dryer to kiln.

(17) Kiln - Brick is normally fired in a tunnel kiln, with some use of periodic kilns. The miscellaneous clay is vitrified at temperatures ranging from 800 to 1100°C over periods of 40 to 270 hours. As with the other clay products, firing requires approximately 0.83 to 1.4 x 10^6 calories per kilogram (3 to 5 x 10^6 BTU per ton) of brick.[10]

Emissions from firing also are similar to those of other clay products: products of combustion, fluorine as hydrogen fluoride, possible additional SO_2, black smoke from any organic matter, and possibly a small amount of fluosilicic acid.

When the brick is removed from the kiln it is ready for

market.

3.5 MAJOR POLLUTANT SOURCES

Most of the environmental problems related to clay mining and processing are concerned with miscellaneous clays. Clay mining and kiln operations of the industry are important pollutant sources.

° Clay Mining

A large number of mines are located in heavily populated areas and cause some environmental problems. A considerable amount of dust is generated, which does not create any known hazardous effects, but does produce nuisance problems. Annual emissions are approximately 30 million tons of waste material from mining kaolin in Georgia, 2 million tons from mining fuller's earth along the Georgia-Florida border, and 5 million tons from mining bentonite in Wyoming.

Surface water pollution is also a problem in mining clay.

° Kilns (for Porcelain, Refractory, and Brick Manufacturing)

Usually these kilns operate at high temperatures (800 to 1900°C). Emissions include products of combustion. If the clay contains sulfur, sulfur dioxide is emitted in excess of that formed by fuel combustion. An appreciable amount of organic matter is volatilized and combusted, forming a small amount of black smoke. Fluorine is evolved as hydrogen fluoride.

REFERENCES FOR CHAPTER 3

1. Ampian, S.G. Clays. In: Minerals Yearbook, 1971. U.S. Bureau of Mines.

2. Cooper, J.D. Clays. In: Mineral Facts and Problems. U.S. Department of the Interior, Washington, D.C., Bureau of Mines Bulletin 650, 1970.

3. Brobst, D.A., and W. P. Pratt. United States Mineral Resources. U.S. Department of the Interior, Washington D.C., 1973.

4. Industrial Minerals and Rocks. Seeley W. Mudd Series. American Institute of Mining, Metellurgical, and Petroleum Engineers, New York, 1960.

5. Kirk-Othmer Encyclopedia of Chemical Technology. New York, McGraw-Hill Book Company. 1967.

6. Bentonite Deposits of Northern Black Hills Districts: Wyoming, Montana, South Dakota. U.S. Geological Survey Bulletin No. 1082-M. U.S. Bureau of Mines. 1962.

7. Compilation of Air Pollution Emission Factors. U.S. Environmental Protection Agency, Raleigh, N.C. Publication No. AP-42. April 1973.

8. Shreve, R. N. Chemical Process Industries. New York, McGraw-Hill Book Company. 1967.

9. Norton, F. H. Refractories, 3rd Edition. New York, McGraw-Hill Book Company. 1949.

10. A Screening Study to Develop Background Information to Determine the Significance of Brick and Tile Manufacturing. Contract No. 68-02-0607 Task 4. Research Triangle Institute, 1972.

11. Air Pollution Control Technology and Costs in Nine Selected Areas. Industrial Gas Cleaning Institute, Inc., Stanford, Connecticut. Prepared for Environmental Protection Agency under Contract No. 68-02-0301. September 1972.

4.0 GYPSUM INDUSTRY

4.1 INDUSTRY BACKGROUND

Gypsum is a natural mineral form of calcium sulfate dihydrate ($CaSO_4:2H_2O$) occuring as a hard solid rock.

In 1971, the United States produced an estimated 9.45 million metric tons and consumed approximately 15 million metric tons of gypsum. Main consumption of gypsum is as prefabricated products (67.7 percent), portland cement retarder (21 percent), and agricultural products (7 percent).

The projected demand for gypsum in the year 2000 is between 29 and 43.5 million metric tons. Domestic reserves of gypsum are estimated to contain 18.14 billion metric tons and are distributed in 23 states.

In the United States about 80 percent of gypsum is produced from open-pit mines and the remaining 20 percent from underground mines.

Table 4.1 lists the states producing gypsum ore and the number of active mines in each state. Table 4.2 lists the states producing calcined gypsum and the number of active plants.

Research in this industry is aimed at recovering sulfur from crude or by-product gypsum.

Table D-1 in Appendix D lists the companies mining gypsum.

Table 4.1 CRUDE GYPSUM MINED IN THE UNITED STATES, BY STATE[2]

(thousand short tons and thousand dollars)

State	1970			1971		
	Active mines	Quantity	Value	Active mines	Quantity	Value
Arizona	4	98	$358	4	W	W
California	7	1,132	3,271	7	1,352	$3,884
Iowa	5	1,136	4,223	5	1,154	4,460
Michigan	5	1,312	5,061	5	1,433	5,585
Nevada	3	451	1,457	3	695	2,372
New York	3	425	2,737	3	415	2,376
Oklahoma	7	874	2,616	8	1,022	3,073
South Dakota	1	15	61	1	21	83
Texas	8	1,220	4,252	7	1,303	4,806
Wyoming	4	216	868	4	232	918
Other States[1]	22	2,557	10,228	20	2,791	11,500
Total	69	9,436	35,132	67	10,418	39,057

W Withheld to avoid disclosing individual company confidential data; include with "Other States."

1 Includes the following States to avoid disclosing individual company confidential data: Louisiana, Montana, Virginia and Washington (1971), 1 mine each; Arkansas, Indiana, Kansas (1971), New Mexico (1971), Ohio, and Utah, 2 mines each; Kansas, 3 mines (1970); Colorado, and New Mexico (1970) 4 mines.

Table 4.2 CALCINED GYPSUM PRODUCED IN THE UNITED STATES, BY STATE[2]

(thousand short tons and thousand dollars)

State	1970					1971				
	Active plants	Quantity	Value	Calcining equipment		Active plants	Quantity	Value	Calcining equipment	
				Kettles	Other[1]				Kettles	Other[1]
California	7	822	$10,403	16	4	6	881	$10,838	18	5
Florida	3	438	5,194	9	2	3	518	5,769	9	2
Georgia	3	538	9,432	15		3	616	11,058	15	
Iowa	5	713	12,301	22	4	5	796	13,704	22	4
Michigan	4	325	6,130	9	1	4	373	7,263	9	1
Nevada	3	240	3,425	12	6	3	330	4,851	12	6
New Jersey	4	334	4,785	9	4	4	452	7,369	9	4
New York	7	874	13,551	21	8	7	922	15,688	21	8
Ohio	3	321	4,984	9	1	3	358	5,790	9	1
Texas	7	870	14,273	28	3	7	1,035	17,074	30	1
Other States[2]	30	2,974	47,569	79	38	29	3,245	52,587	77	37
Total	76	8,449	132,047	229	71	74	9,526	151,991	231	69

1 Includes rotary and beehive kilns, grinding-calcining units, Holo-Flites, and Hydrocal cylinders.

2 Comprises States and number of plants as follows: Arizona, Arkansas, Colorado, Connecticut, Delaware, Illinois, Massachusetts, Montana, New Hampshire, New Mexico (1971), Pennsylvania and Washington, 1 plant each; Kansas, Louisiana, Maryland, New Mexico (1970), Oklahoma, Utah, Virginia and Wyoming, 2 plants each; and Indiana, 3 plants.

4.2 RAW MATERIALS

Gypsum is classified according to the nature of its occurrence. The several types of gypsum deposits are described in the following paragraphs.

1. Bedded Deposits - The most important commercial source is gypsum beds, in which massive gypsum occurs in one or more layers, associated with such materials as limestone, shale, and sandstone in stratified series. In many districts like those of New York, Michigan, Ohio, Iowa, and Kansas, the gypsum and enclosing strata are nearly horizontal.

2. Surface Deposits - Accumulations of loose or earthy gypsum are common in dry or semiarid climates, where the ground waters come in contact with buried gypsum beds. After dissolving the sulphate, the water reprecipitates it in the form of gypsum or anhydrite when it reaches the surface and evaporates. Gypsite is a very fine, almost impalpable aggregate in which microscopic crystals of gypsum (also anhydrite) are mixed with clay, carbonates, sand, and organic matter.

3. Veins - Small fissures and cavities in the vicinity of gypsum beds are likely to be filled by selenite and satin spar that have been deposited by underground waters. The shales and limestone associated with the gypsum beds of New York are quite commonly intersected by innumerable small veins.

4. Disseminated Gypsum - Clay and soft shale commonly contain flakes and crystals of gypsum sparsely distributed through their mass. Deposits of disseminated gypsum are of no commercial value.

5. California Gypsum - Three types of gypsum occurring as gypsite deposits have been recognized in California;

those that form caps on upturned gypsiferous beds, those that occur along the margins of periodic lakes, and those that have formed in the beds of dry washes.

Gypsum in the form of selenite crystals dispersed in mud occur in Bristol Lake, San Bernardino County, and in the neighboring Cadiz and Danby Lakes.

At San Bernardino County, gypsum, salt, and celesite occur in zones. They consist of a gypsum-bearing unit, a salt-bearing unit, and saline-free sedimentary rocks that enclose the gypsum and salt beds. The gypsum-bearing unit consists of 183 to 244 meters (600 to 800 ft.) of predominantly light tan sedimentary rocks in which gypsum occurs as relatively thin beds alternating with greenish, gypsiferous clay.

4.3 PRODUCTS

Plaster of paris and gypsum board are the main commercial forms of gypsum. An analysis of gypsum from Michigan and California is given in Table 4.3.

Table 4.3 ANALYSIS OF GYPSUM
(percent)

Composition	Michigan[3]	California[4]
SiO_2	0.36	18.52 (includes solubles)
R_2O_3	0.74	
CaO	32.68	24.36
MgO	0.99	0.46
Ignition loss	22.61	
SO_3	42.45	33.70
Combined H_2O	-	15.53
Free water	-	2.88
Iron & aluminum oxide	-	1.86
CO_2	-	1.07
Not determined		1.62

4.4 PROCESS DESCRIPTION

In processing of gypsum, the mined ore is upgraded by crushing, screening, and calcining before treatment to produce different forms of gypsum. The flow chart in Figure 4.1 illustrates gypsum processing.

4.4.1 Mining

About three-fourths of the gypsum is mined by open-pit methods and the remainder by underground methods.

(1)* Open-pit mining - requires careful selection of deposits that contain minimum overburden.

Air pollutant emissions are significant and a considerable amount of solid waste is generated. About 1.1 tons of overburden waste is produced for each ton of gypsum mined. The overburden may contain glacial silt, sand, gravel, clay, limestone, shale or other material. The gypsum dust generated from mining is harmless and is considered as a cure for tuberculosis.[1]

Overburden is removed by a variety of scrapers, power shovels, and drag lines. After drilling, the broken ore is loaded by power shovels into trucks.

(2) Underground mining - is usually done with open stop, room and pillar methods. Environmental problems are negligible.

4.4.2 Upgrading

The gypsum ore is upgraded by crushing and grinding.

(3) Crushers and Mill - Primary crushing of the ore is accomplished at the mines. A secondary crushing is the initial

* Numbers refer to corresponding processes in Figure 4.1.

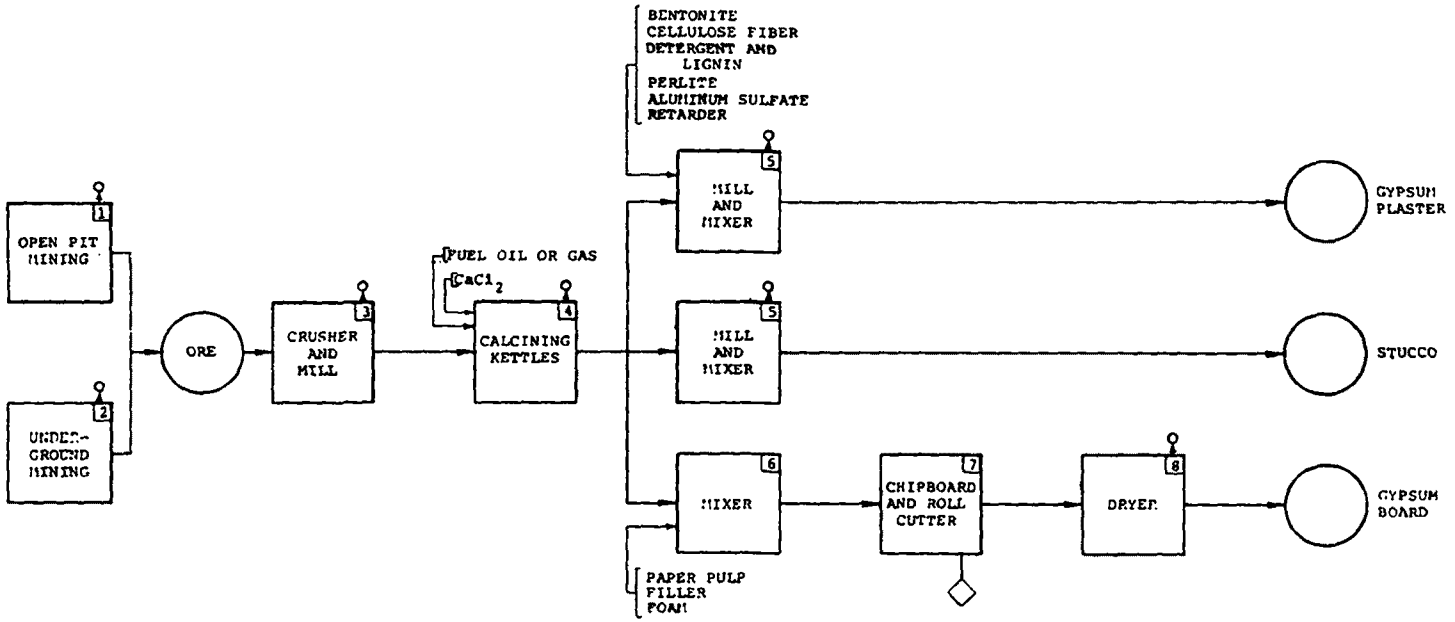

Figure 4.1 Gypsum industry

operation at the plant. The material is milled and then may be dried with air heated by an oil or natural gas unit. About 0.5 gram of particulate is emitted per kilogram (1 lb/ton) of gypsum milled. If a dryer is used, about 20 grams of particulate per kilogram (40 lb/ton) of gypsum is emitted to the atmosphere. Emissions from the dryer can be reduced to about 0.1 gram of particulate per kilogram (0.2 lb/ton) of gypsum by use of fabric filters.[5]

(4) Calcination - The dried material is calcined in heated, agitated kettles for about 2 to 3 hours at a constant temperature of 160°C. During calcination, water of hydration is released from the gypsum rock resulting in a gas stream containing moisture. Calcium chloride is added during calcination to reduce the moisture content of the calcined product.

Both vertical and rotary kilns fired by oil or natural gas are in use. When the ground ore is heated at 121 to 149°C, the product is first-settle plaster ($CaSO_4 \cdot 1/2\ H_2O$), which is used to make gypsum board. Further heating to 190°C yields an anhydrous product called second-settle plaster.

The most significant source of emissions in gypsum processing is the calcining operation. The turbulent gases created by the release of the water of crystallization carry calcined and partially calcined gypsum into the atmosphere.

About 45 grams of particulate per kilogram (90 lb/ton) of gypsum is emitted from calcining operations; these emissions can be controlled by using fabric filters.[6]

The dust particles are relatively large compared with those from processes in which the material is vaporized and condensed. Since the moisture content of the dust is significant, resistivity is not a problem.

The gas flow ranges from a minimum around 0.14×10^6 to 37.8×10^6 cm^3/sec for rotary calciners. Gas velocities range from 45.7 to 244 cm/sec (1.5 to 8 ft/sec). Dust loadings are around 9.1 to 137×10^{-6} gm/scm^3d. Gas temperatures are around 93 to 177°C.[6]

(5) Mill and Mixer - The calcined product is ground in a mill to a finished size of 100 mesh (99%) and marketed as stucco, or further processed for making gypsum plaster by addition of wetting agents (detergents, cellulose fibers, etc.) and several fillers. The calcined gypsum is also used to produce gypsum board.

Considerable amounts of dust are evolved from the mills.

(6) Mixer (for gypsum board production) - The calcined gypsum entering this section of the plant is slurried with paper pulp. Fillers such as raw gypsum and foam are added to lighten the slurry. The paper pulp is prepared by adding paper, water, potash, lignin, and starch.

Emissions are negligible.

(7) Chipboard and Cutter - The slurry is sandwiched between two thin sheets of special chipboard, the thickness is adjusted, and the board is cut into sections.

Solid particles are emitted.

(8) Dryer - The board enters the dryer and is exposed to re-circulating air fanned through steam coils. The entering board contains 32 percent moisture, most of which is removed.

Particulates are emitted, but emission rate data are not available.

4.5 MAJOR POLLUTANT SOURCES

Gypsum dust is generated by mining and processing, but is supposedly one of the least harmful dusts.

Overburden of open-pit mining is indicated to be removed in a ratio of about 1.1 tons of waste for each ton of gypsum mined. Calciners and dryers are main pollution sources of the industry. Emissions from the calciner include about 45 grams of calcined and partially calcined gypsum per kilogram of gypsum produced.

REFERENCES FOR CHAPTER 4

1. Schroder, J.H. Gypsum. In: Mineral Facts and Problems. U.S. Department of Interior. Washington, D.C. Bureau of Mines Bulletin Number 650. 1970.

2. Reed, A.J. Gypsum. In: Minerals Yearbook. U.S. Bureau of Mines, 1971.

3. Private communication with Michigan Gypsum Co., Saginaw, Michigan.

4. Ver Tlanck, W.E. Gypsum in California. California Division of Mines Bulletin, 1952.

5. Compilation of Air Pollution Emission Factors. Contract No. CPA-22-69-119.

6. Southern Research Institute. A Manual of Electrostatic Precipitator Technology. Part II - Application Areas. Contract No. CPA-22-69-73.

7. Taeler, David H. Gypsum Plant by the Numbers. Minerals Processing, January 1967.

8. Seeley W. Mudd Series. Industrial Minerals and Rocks. The American Institute of Mining, Metallurgical, and Petroleum Engineers. New York, 1960.

5.0 LIME INDUSTRY

5.1 INDUSTRY BACKGROUND[1]

In 1971, the United States produced and consumed an estimated 17.8 million metric tons of lime. Though there was an increase in production, the number of producing plants decreased from 209 in 1967 to 187 in 1971. Four principal usages of lime were chemical, 79 percent; construction, 12 percent; refractory, 8 percent; and agricultural, 1 percent. In 1969, about 5 percent of the limestone mined in the United States was used for lime production.[2]

Lime is produced in 42 states and consumed by all states. Six states, Ohio, Pennsylvania, Missouri, Texas, Michigan, and New York, produce about 59 percent of total domestic output. Five states, Ohio, Pennsylvania, Texas, Michigan, and Indiana, accounted for 50 percent of total lime consumption. Table 5.1 gives the number and production of domestic plants.

Table 5.1 LIME PRODUCED IN THE UNITED STATES, BY SIZE OF PLANT[1]

(thousand short tons)

Size of Plant	1971		
	Plants	Quantity	Percent of Total
Less than 10,000 tons	30	138	1
10,000 to 25,000 tons	37	590	3
25,000 to 50,000 tons	37	1,404	7
50,000 to 100,000 tons	26	1,775	9
100,000 to 200,000 tons	25	3,805	19
200,000 to 400,000 tons	26	7,215	37
More than 400,000 tons	7	4,708	24
Total	188	19,635	100

1) Excludes regenerated lime. Includes Puerto Rico.

Most lime producers own their source of supply and have ample reserves of ore.

Table E-1 of Appendix E lists companies processing lime, Table E-2 gives lime production in the United States by state, and Table E-3 gives lime production in the United States by size of plant.

5.2 RAW MATERIALS

The main raw material "limestone" is composed of at least 50 percent calcium carbonate and various impurities, such as magnesium carbonate, alumina, silica and iron compounds. The limestone is referred to as high calcium when it contains less than 5 percent magnesium carbonate and as dolomite when it contains 30 to 45 percent magnesium carbonate. Table 5.2 gives a typical analysis of limestones from different sources in the United States, and Table 5.3 gives the mass spectrographic analyses of limestones.

A small percentage of lime is manufactured from oyster shells. Although limestone deposits are found in every state in the U.S., only a small portion is pure enough for industrial use.

5.3 PRODUCTS

The usual products are limestone, quicklime, and hydrated lime. Table 5.4 lists the typical analyses of commercial quicklimes.

5.4 PROCESS DESCRIPTION

Lime (CaO) is produced by calcining limestone and dolomite at high temperatures. The lime is further reacted

Table 5.2 REPRESENTATIVE CHEMICAL ANALYSES OF DIFFERENT TYPES OF U. S. LIMESTONES[2]

Component	Limestone, %[a]							
	1	2	3	4	5	6	7	8
CaO	54.54	38.90	41.84	31.20	29.45	45.65	55.28	52.48
MgO	0.59	2.72	1.94	20.45	21.12	7.07	0.46	0.59
CO_2	42.90	33.10	32.94	47.87	46.15	43.60	43.73	41.85
SiO_2	0.70	19.82	13.44	0.11	0.14	2.55	0.42	2.38
Al_2O_3	0.68	5.40	4.55	0.30	0.04	0.23	0.13	1.57
Fe_2O_3[b]	0.08	1.60	0.56	0.19	0.10	0.20	0.05	0.56
SO_3[c]	0.31		0.33			0.33	0.01	
P_2O_5			0.22		0.05	0.04		
Na_2O	0.16		0.31	0.06	0.01	0.01		
K_2O			0.72		0.01	0.03		
H_2O			1.55		0.16	0.23		n.d.
Other			0.29		0.01	0.06	0.08	0.20

a) 1 = Indiana high-calcium stone.
2 = Lehigh Valley, Pa., "cement rock".
3 = Pennsylvania "cement rock".
4 = Illinois Niagaran dolomitic stone.
5 = Northwestern Ohio Niagaran dolomitic stone.
6 = New York magnesian stone.
7 = Virginia high-calcium stone.
8 = Kansas Cretaceous high-calcium stone (chalk).

b) Includes some Fe as FeO.
c) Includes some elemental S.

Table 5.3 SPARK SOURCE MASS SPECTROGRAPHIC ANALYSES OF LIMESTONES (WEIGHT PERCENT)[3]

Element	Limestone (1)	Limestone (2)	Limestone (3)	Limestone (4)
Mn	0.0140	0.015	0.025	0.011
Fe	0.25	0.09	0.07	0.10
Cu	N.D.	N.D.	0.00	0.00011
Zn	0.0059	0.0006	N.D. <0.06	
As	N.D.	0.0011		
Rb	0.00017	0.00007		
Sr	0.15	0.022	0.039	0.078
Y	N.D.			
Cs	N.D.	N.D.		
Ba	0.001	N.D.	N.D. <0.20	
Pb	N.D.		N.D. <0.01	N.D. <0.01
Br	N.D.			
Li	0.00018	0.000031		
B	0.00015	0.00008	N.D. <0.005	N.D. <0.005
C	0.49			
N	0.00045	0.00022		
F	0.0012	0.00043		
Na	0.036	0.17	TR <0.06	0.036
Mg	(>1%)	0.4	0.3	2.9
Al	0.42	0.33	0.009	0.012
P	0.0085	0.005	N.D. <0.5	
S	0.022	0.003		
Cl	0.0038	0.00043		
K	0.058	0.033	-	N.D. <0.20
Ti	0.044	0.016	N.D. <0.004	N.D. <0.003
V	0.0015	0.00053	-	
Cr	0.0076	0.0019	0.001	0.00084
Si			0.24	0.65
Ca			39	35
Ga			N.D. <0.006	N.D. <0.002
Ms			-	
Sn			N.D. <0.008	
Ni			N.D. <0.002	N.D. <0.001
Co			N.D. <0.002	N.D. <0.001
Mo				Nil

with water to form calcium hydroxide $Ca(OH)_2$, which is called hydrated lime when it is in a dry state, or slaked lime when it is marketed wet. The flow diagram in Figure 5.1 shows the steps involved in lime processing.

Table 5.4 TYPICAL ANALYSES OF COMMERCIAL QUICKLIMES[2]

Component	High-Calcium Quicklimes, Range Percent	Dolomitic Quicklimes, Range Percent
CaO	93.25-98.00	55.50-57.50
MgO	0.30- 2.50	37.60-40.80
SiO_2	0.20- 1.50	0.10- 1.50
Fe_2O_3	0.10- 0.40	0.05- 0.40
Al_2O_3	0.10- 0.50	0.05- 0.50
H_2O	0.10- 0.90	0.10- 0.90
CO_2	0.40- 1.50	0.40- 1.50

5.4.1 Mining

Limestone is obtained by open-pit and underground mining methods.

(1*) Open-pit mining - Dust is released to the atmosphere from open-pit quarrying, loading, and unloading of quarry ore. The composition of dust is the same as that of limestone quarried (see Table 5.1). Dust suppression is achieved by spraying water and by treating roads with $CaCl_2$ and road oil.

* Numbers refer to corresponding processes in Figure 5.1.

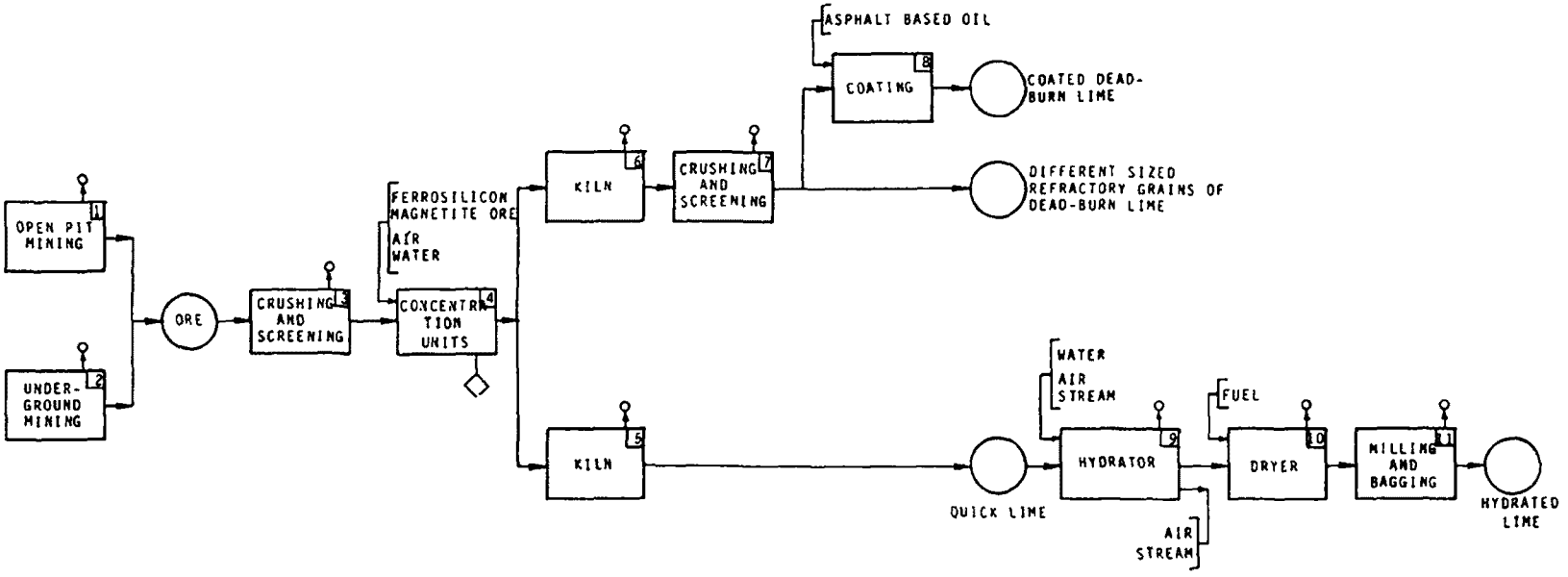

Figure 5.1 Lime industry

Broken stones from quarries are loaded into cars and transferred to the crushing plants.

(2) Underground mining - This is costlier than open-pit mining and does not involve stripping operations.

The process releases less dust to the atmosphere than does open-pit mining.

The rock is mined and loaded into cars and hauled to crushing plants in car trains by locomotives.

5.4.2 Beneficiation

Involves a series of crushing, screening, and concentration operations.

(3) Crushing and Screening - The rock is reduced to lumps by crushing in primary and secondary crushers and screened. Usually the primary crushers are located at the mine site.

Crushing and screening cause considerable emission of dust, which is usually collected and either discarded or blended with the finest size stone product. Without controls, about 15.5 grams (31 lb/ton) of dust from the primary crusher and 1 gram (2 lb/ton) of dust from the secondary crusher are emitted per kilogram of product crushed.

The ore is brought to the crushing units in car trains. The crushed product is dropped onto a feed hopper located just above a belt conveyor, which takes the crushed product to storage.

(4) Concentration - For further upgrading, some plants use heavy-media separators to remove granite and silica from the crushed ore. The heavy-media separator contains a mixture

of ferrosilicon and magnetite ore (Fe_3O_4). Recycled water is introduced into the separator from the side and air under pressure from the bottom. The ore is segregated by air flotation. The dolomite sinks to the bottom by specific gravity and is forced out through a pipe, whereas the lighter reject rock floats on the surface and is skimmed off separately. Undesirable silica and granite ores are disposed of as solid waste. Both dolomite and reject rock are washed to recover the media. Some plants use thickeners and a magnetic separator. Some companies occasionally dry the limestone in a rotary drier for better grinding.

5.4.3 Calcination

Calcination is the major source of particulate emissions in lime manufacturing. The different sized ores are calcined at different temperatures to produce refractory (dead-burned dolomite), lime, and quicklime.

Calcining is accomplished in several types of kilns, differing in configuration, capacity, fuel economy, size stone required, and product. Vertical kilns are the most efficient in fuel usage. Rotary kilns give much higher production rates but also produce more particulate emissions. Slightly more than 80 percent of the total lime produced in the U.S. is calcined in rotary kilns.

Kilns are fired with natural gas or pulverized coal.

Calcination of the materials for quicklime and refractory lime produces similar emissions. Rotary kilns emit about 90 grams (180 lb/ton) of particulate and vertical

kilns emit only 3.5 grams (7 lb/ton) of particulate per kilogram of lime produced. The particulate emissions include raw limestone, lime dust, and fly ash in the range of 4.6 to 45.8 x 10^6 grams/scm^3.

The gaseous effluents consist of carbon dioxide, water vapor, and nitrogen. Sulfur dioxide and sulfur trioxide are also emitted if sulfur-containing oil or coal is used as fuel. Temperature of the gaseous effluent is usually between 420 and 980°C. Table 5.5 gives a typical exhaust gas composition, and Table 5.6 gives the amount of exhaust gas produced from various sizes of rotary kilns.

Table 5.5 A TYPICAL OVERALL KILN EXHAUST GAS COMPOSITION[7]

N_2	-	59.7% (by vol.)
CO_2	-	24.3%
H_2O	-	15.3%
O_2	-	0.7%

Table 5.6 TYPICAL EXHAUST GAS PRODUCTION FOR VARIOUS KILN SIZES[7]

Process wt. tons lime produced per day	Exhaust Gas, sm^3/sec: Gas-fired kiln	Fuel/lime ratio coal-fired kiln 1:3	1:4	1:5
113	5.19	8,800	6,900	5,700
227	12.6	17,600	13,800	11,400
454	22.1	35,200	27,600	22,800

The lime industry also causes odor pollution, mainly due to kiln operations.[8]

(5) Kiln - In calcination for quicklime concentrated limestone of proper size is calcined at temperatures ranging from 1100 to 1370°C. The product is sold directly or further processed for hydrated lime.

The limestone dust released in the kiln becomes more friable as it approaches the decomposition temperature. Dust emissions from rotary kilns range from 5 to 15 percent of the weight of the lime produced. Temperatures of exhaust gases from the kiln vary from 310 to 980°C. Particulate composition may be raw limestone or dolomite dust, or calcined product dust. Calcining a metric ton of high-calcium quicklime requires approximately 780 million calories of heat. After the calcined material is cooled and screened, the fines are used as by-products and the coarse material stored for sale.

Table 5.7 gives a typical chemical analysis of emissions from a kiln producing quicklime.

Table 5.7 TYPICAL CHEMICAL ANALYSIS OF LIME KILN EMISSIONS[4]

Component	High-calcium operation, %
CaO	66.32
$CaCO_3$	23.06
$Ca(OH)_2$	6.37
MgO	1.4
$CaSO_4$	1.22
Heavy metal oxides	0.97
Acid insoluble	0.66

If pulverized coal is used as a fuel, the particulates would also include fly ash (consisting mostly of the oxides of silicon, aluminum and iron) and soot and tars resulting from incomplete combustion.

(6) Kiln - The concentrated limestone of 0.635 cm screen overflow is combined with iron oxide (about 5% by weight) and calcined in the kiln at 1820°C. The calcined product is called burned dolomite. Heat requirements are about 720 million calories per metric ton of dolomite quicklime produced. Particulate emissions are similar to those from calcination for quicklime. Table 5.8 gives an analysis of emissions from a kiln producing dolomite lime.

Table 5.8 TYPICAL CHEMICAL ANALYSIS OF LIME KILN EMISSIONS[4]

Component	Dolomitic operation, %
CaO	7.23
$CaCO_3$	64.3
$Ca(OH)_2$	-
MgO	28.2
$CaSO_4$	0.27
Heavy metal oxides	0.35
Acid insoluble	0.45

If pulverized coal is used as a fuel, the particulates would also include fly ash (consisting mostly of the oxides of silicon, aluminum and iron) and soot and tars resulting from incomplete combustion.

5.4.4 Finishing Operations

(7) Crushing and Screening - The dead-burned dolomite is crushed; part is sent for coating, and the remainder is screened to yield various sizes of refractory grains.

Without controls, a small amount of dust is emitted to the atmosphere. Lime dust is friable and can cause irritation of the nose and throat.

(8) Coating - In the coating section, the crushed dead-burned dolomite is coated with asphalt-based oil and heated to 82°C to prevent hydration. Hydrocarbons may be emitted.

(9) Hydrator - Although most of the quicklime is marketed, a small portion is reacted with water to produce hydrated lime. In the hydrator, water is added to the quicklime and agitated to produce intimate contact. The lime (CaO) reacts with water to produce hydrated lime $Ca(OH)_2$. Large amounts of steam and air are discharged to maintain constant pressure in the hydrator. Table 5.9 gives a range of typical chemical analyses of commercial hydrates.

Table 5.9 RANGE OF TYPICAL CHEMICAL ANALYSES OF COMMERCIAL HYDRATES[7]

Component	High-calcium, %	Highly hydrated dolomitic, %
CaO	71-74	45-41
MgO	0.5-2	25-30
H_2O	24-25	27-28
CO_2	0.3-0.7	0.3-0.7
SiO_2	0.2-0.5	0.2-0.5
R_2O_3	0.1-0.3	0.1-0.3

The exothermal reaction of lime and water produces hydrated lime powder (which is semidry). Fine dust, driven

out by steam and moist air, has the same composition as the hydrated lime being produced. On settling, this dust may react with carbon dioxide in the air to form calcium and magnesium carbonates.

Particulates are emitted in concentrations from 0.02 to 2.15×10^{-6} gram/cm^3.

(10) Dryer - The hydrated lime is dried in a dryer fired with natural gas or oil. If excess water has been added in the hydrator, additional heat must be supplied during drying. Particulate emissions may be substantial.

(11) Milling and Bagging - The product is milled, then bagged for subsequent shipping.

Table 5.10 summarizes overall particulate emissions from lime processing. Material handling in the lime plant emits about 2.5 grams of particulate per kilogram (5 lb/ton) of lime produced.

5.5 MAJOR POLLUTANT SOURCES

Many operations of the lime industry emit air pollutants, but the kiln exhaust gases represent the single largest source of airborne particulate matter.

° Kiln Operations - As discussed in preceding sections, both rotary and vertical kilns are used in calcining for lime product. Rotary kiln emissions are large in comparison to those from vertical kilns.

The nature and composition of air pollutants emitted from the rotary lime kilns are functions of the type of

Table 5.10 REPORTED DUST EMISSON VALUES FROM LIME PLANT OPERATIONS [9]

Operation	Particulate Emission gm/m^3	Collection Efficiency	Control Method
Limestone primary crushing	0.037	Poor	Water sprays
Limestone secondary crushing	0.124	Good	Cyclone & bag filters
Crushed stone stockpile	0.004		Water sprays
Pulverized limestone dryer	4.67	60-70%	Cyclone collector
Limestone screening	0.378		None
Bulk loading	0.020		None
Stone unloading			Water sprays
Vertical lime kiln	0.69-2.29		None
Rotary kiln	0.002	99.99	Glass bag filter
Rotary kiln	0.16-0.18	97.5	4-stage cyclonic scrubber
Rotary kiln	0.04	99.7	4-stage cyclonic scrubber
Rotary kiln	9.8	70.0	High-efficiency cyclones
Rotary kiln	0.50	95.0	Single-stage precipitator
Rotary kiln	0.27-0.57	96-97	Venturi scrubber
Rotary kiln	0.7-0.9	97.5	Impingement scrubber
Calcimatic kiln	0.04	99.2	Glass bag filter
Lime conveying-transfer points	0.4-1.8		Cyclone collector
Lime distribution system-airveyor	0.02	99+	Cloth bag filter
Hydrating	0.02-2.2		Water sprays in stack
Hydrating	0.165		Wet scrubber
Hydrating	0.02		Wet scrubber

Table 5.10 (continued). REPORTED DUST EMISSION VALUES FROM LIME PLANT OPERATIONS

Operation	Particulate Emission gm/m^3	Collection Efficiency	Control Method
Hydrating	0.04		Wet scrubber
Hydrating	0.082		Wet scrubber
Hydrate milling	No visible dust	99+	Bag filter
Hydrate loader and packer	0.02	99+	Bag filter

limestone charged and of fuel burned. The particulate emissions include raw limestone and completely calcined lime dust, fly ash, tar, and unburned carbon. The quantity of dust emitted from a rotary lime kiln can be as high as 15 percent of the product lime weight. About 90 grams of particulate are released in treating one kilogram (180 lb/ton) of lime. The size of the dust being discharged from the kiln may be as much as 30 percent below 5 microns and 10 percent below 2 microns. The dust emissions are considered mainly a nuisance rather than a health hazard although lime is irritating to eyes, respiratory membrane, and moist skin.

The gaseous effluent is usually between 420 and 980°C and is composed of carbon dioxide, water vapor, and nitrogen. Sulfur dioxide and sulfur trioxide are also emitted if sulfur-containing oil or coal are used as fuels. An overall kiln exhaust gas composition is presented in Table 5.5.

These emissions can be controlled by use of proper control equipment. Table 5.10 presents control methods and collection efficiency of equipment.

° Crushing Operations - Crushing and material handling operations are another significant source of particulate emissions in the lime industry. The crushers emit about 12 grams of particulate per kilogram (24 lb/ton) of rock crushed.

REFERENCES FOR CHAPTER 5

1. Reed, A.H. Lime. In: Minerals Year Book, U.S. Bureau of Mines. 1971.

2. Kirk-Othmer, Encyclopedia of Chemical Technology. New York, John Wiley and Sons, Inc., Second Edition. 1967.

3. Radian Corporation's Report, Radian Corporation, Austin, Texas. Contract No. 68-02-0046.

4. Resource Research, Inc., A Study of the Lime Industry in the State of Missouri for the Conservation Commission of the State of Missouri. January 1968.

5. Compilation of Air Pollutant Emission Factors. U.S. Environmental Protection Agency. Raleigh, North Carolina. Publication Number AP-42. April 1973.

6. Mitchell, R.J., Going Underground for Limestone. Rock Products, Mining Processing. April 1964.

7. Hardison, L.C., et al. Study of Technical and Cost Information for Gas Cleaning Equipment in the Lime and Secondary Non-Ferrous Metallurgical Industries. Industrial Gas Cleaning Institute, Inc., Rye, New York.

8. Laamanen, Arvo. Views on Clean Air Protection Pertaining to Construction Material Production, Construction, and Buildings. Text in Finnish. Rapenuustekнikka, Vol. 5:256, 1969.

9. Lewis, C.J. and B.B. Crocker, The Lime Industry's Problem of Airborne Dust. Journal of Air Pollution Control, Vol. 19, No. 1, January 1969.

6.0 PHOSPHATE ROCK INDUSTRY

6.1 INDUSTRY BACKGROUND[1,2]

The United States is the largest producer and consumer of phosphate rock in the world, producing an estimated 40 percent and consuming approximately 35 percent of the world's supply. In 1973, the U.S. produced approximately 38.6 million metric tons of rock and consumed 28.6 million metric tons, exporting the remainder.[3] About 70 percent of domestic consumption of phosphate rock is as fertilizer. The other major uses are in animal feeds, detergents, electroplating and polishing of metals, insecticides, and medicines.

Demand for phosphorus in the year 2000 is projected to be 8 to 14.2 million metric tons for the United States and 29 to 56.2 million metric tons for the rest of the world.

In the United States phosphate rock deposits are found in 23 states. Florida, the leading producer for many years, furnished 83 percent of domestic production. Tennessee produced 6 percent and western states (Idaho, Montana, Utah, and Wyoming) produced 11 percent of domestic phosphate in 1971. North Carolina accounts for a small percentage. Commercial deposits from Florida are expected to contain an

ample supply of ore to the year 2000. High-grade Tennessee deposits may last for only 10 to 20 years; large deposits of low-grade ore are available in that area, however. Deposits in the western states are located far from seaports and fertilizer-consuming areas. Most of these deposits are very deep and require underground mining.

In 1968, there were 28 companies (10 in Florida) and the Tennessee Valley Authority operating phosphate rock mines. Most manufacture phosphate fertilizers or elemental phosphorus, usually in plants near mining operations. Six companies and the TVA manufacture elemental phosphorus in 11 plants in six states. There are more than 1600 fertilizer mixing plants in the United States. In 1968, about ten Florida firms mined and processed phosphate rock and manufactured phosphoric acid and fertilizers.

Table F-1 of Appendix F lists companies processing phosphate rock, Table F-2 major producers of normal superphosphate, Table F-3 major producers of triple superphosphate, Table F-4 major producers of fertilizer granules, Table F-5 producers of wet-process phosphoric acid, and Table F-6 lists producers of thermal process phosphoric acid and superphosphoric acid.

Research is required to solve problems concerning the recovery of by-products, and disposal of wastes from mining and processing. The phosphate industry faces environmental problems, particularly in the southeastern states, where

phosphate mining and processing industries are located very close to urban areas.

6.2 RAW MATERIALS

Most of the phosphorus occurs in minerals of the apatite group, $Ca_{10}(PO_4, CO_3)_6(F, OH, Cl)_2$. Usually small amounts of VO_4, As_2O_4 substitute for PO_4 and Na, Sr, U, Th and the rare earths substitute for Ca of phosphate rock. Silica, clay, aluminum, and fluorine are present as impurities. Phosphatized limestones, sandstones, shales, and igneous rocks are referred to as phosphate rock.

The tricalcium phosphate content of ore is also known as B.P.L. (bone phosphate of lime). One percent of tricalcium phosphate is equivalent to 0.458 percent (P_2O_5); quantities vary from one deposit to another. The rock is graded according to its B.P.L. content.

Table 6.1 shows the main phosphate rock producers in the United States.

Table 6.1 PRODUCTION OF PHOSPHATE ROCK IN THE UNITED STATES, BY STATE[1]

State	Mine production	
	Amount in metric tons of total ore mined	P_2O_5 content of the rock
Florida	97,220,000	14.1
Tennessee	4,309,000	21.1
Western States	4,420,000	26.0

The phosphate ores found in different states are described below.

Florida - Production of rock in Florida, now the world's leading producer, started in 1888. Of the two available rocks, pebble and hard rock, pebble phosphate is the more important, with B.P.L. content ranging from 66 to 70 percent. In the original sediment, the soft rock is associated with the land pebble, which is a mixture of phosphatic clays and sand. Exploiting the land pebble deposits is a major problem of the phosphorus industry. The uranium content of pebble fraction is higher than that of the concentrate.[4] Table 6.2 gives analysis for P_2O_5, CaO, F, and U of Florida phosphate rock.

Table 6.2 ANALYSIS OF PHOSPHATE ROCK: FLORIDA

(in percent)

Composition	Bone Valley Formation		Hawthorn Formation	
	Pebble	Concentrate	Pebble	Concentrate
P_2O_5	30.8	32.5	23.8	29.9
CaO	43.7	43.2	40.0	44.8
F	3.4	3.6	2.7	3.3
U	0.015	0.010	0.009	0.007

Tennessee - Of the brown, blue, and white phosphate rocks available, the brown variety is the only one of industrial importance. It contains about 60 percent B.P.L. and the remainder is iron, aluminum, silicon, and calcium. Production of phosphate rock in Tennessee began in 1894.

Western States - The leading western producers, in order of quantity produced, are Idaho, California, Montana, Utah, and Wyoming. The B.P.L. content of western rocks ranges from 60 to 70 percent. Uranium is found in the phosphatic beds in amounts ranging from 0.01 to 1.2 percent U_2O_5. Table 6.3 presents typical analyses of commercial phosphate rock. Table 6.4 presents a spectrographic analysis of eocene rocks from four areas in Wyoming and Utah.

6.3 PRODUCTS

The major product of the phosphate rock industry is fertilizer. The major phosphatic fertilizer of the several kinds produced is triple or concentrated superphosphate. Other fertilizers are ammonium phosphates, ammonium phosphate sulfate, calcium metaphosphate, and magnesium ammonium phosphate. Elemental phosphorus and phosphoric acid are also produced. Ferrophosphorus is produced, primarily in Tennessee, and sold as a ferroalloy to the steel industry.

Minor elements that can be recovered as by-products include fluorine, vanadium, uranium, scandium, and rare earths. Because of the vast tonnages available, marine phosphorites constitute significant resources of these elements. All these elements except scandium have been or are being recovered from the wet phosphoric acid manufacturing process; vanadium is recovered in the thermal phosphoric acid manufacturing process.

The wet process of producing phosphoric acid also produces impure calcium sulfate (gypsum) as a by-product.

Table 6.3 REPRESENTATIVE ANALYSIS OF COMMERCIAL PHOSPHATE ROCKS[5]

Component	Location and Type							
	Florida			Tennessee			Western States	
	High Grade Land Pebble	Furnace Grade Land Pebble	Hard Rock High Grade	Hard Rock Waste Pond	Brown Rock High Grade	Brown Rock Furnace Grade	High Grade Phosphate Rock	Low Grade Phosphate Rock
P_2O_5	35.5	30.5	35.3	23.0	34.4	21.2	32.2	19.0
CaO	48.8	46.0	50.2	28.5	49.2	29.1	46.0	23.3
MgO	0.04	0.4	0.03	0.4	0.02	0.6	0.2	1.4
Al_2O_3	0.9	1.5	1.2	14.8	1.2	10.0	1.0	5.9
Fe_2O_3	0.7	1.9	0.9	2.9	2.5	6.2	0.8	4.0
SiO_2	6.4	8.7	4.3	19.8	5.9	25.6	7.5	27.4
SO_3	2.4	2.6	0.1	0.01	0.7	0.4	1.7	1.9
F	4.0	3.7	3.8	2.1	3.8	2.2	3.4	1.8
Cl	0.01	0.01	0.005	0.005	0.01		0.02	
CO_2	1.7	4.0	2.8	1.4	2.0	1.2	2.1	4.0
Org. Carbon	0.3	0.5	0.3	0.3	0.2	0.3	1.8	5.0
Na_2O	0.07	0.1	0.4	0.1	0.2	0.3	0.5	1.5
K_2O	0.09	0.1	0.3	0.4	0.3	0.4	0.4	1.0
H_2O	0.09	0.1	0.3	0.4	0.3	2.4	0.4	2.5
ZnO	1.8	2.0	2.0	7.0	1.4	2.5	2.5	3.5

Table 6.4 QUANTITATIVE SPECTROGRAPHIC ANALYSIS FROM THE FOUR AREAS OF EOCENE ROCKS STUDIED IN WYOMING AND FROM THE UINTAH BASIN, UTAH (in percent)[4]

Element[a]	Wyoming						Utah
	Area 1 (Green River)			Area 2	Area 3	Area 4	Uintah Basin
	Zone 1	Zone 2	Zone 3	(Pine Mountain)	Beaverdenide	Lysite Mountain	
Si	>10	>10	7	>10	>10	>10	>10
Al	7.0	7.0	3	5.0	7.0	7.0	7.0
Fe	1.5	3.0	0.7	2	1.5	1.5	3.0
Mg	3.0	7.0	7.0	0.7	1.5	0.7	3.0
K	5.0	3.0	3.0	1.5	7.0	5.0	3.0
Na	7.0	3.0	1.5	3.0	3.0	1.5	3.0
Ca	>10	>10	>10	>10.0	7.0	>10.0	>10.0
Ti	0.3	0.15	0.07	0.1	0.15	0.15	0.15
Ba	0.07	0.07	0.15	0.1	0.15	0.07	0.07
V	0.015	0.015	0.007	0.01	0.015	0.007	0.015
Mn	0.07	0.03	0.03	0.07	0.07	0.07	0.07
Sr	0.15	0.3	0.3	0.2	0.15	0.15	0.07
Zr	0.03	0.005	0.003	0.03	0.015	0.007	0.015
B	0.015	0.007	0.007	0.0	0.003	0.0	0.007
Cr	0.007	0.007	0.003	0.007	0.007	0.003	0.007
Cu	0.007	0.003	0.0015	0.003	0.007	0.0015	0.007
Ni	0.003	0.003	0.0015	0.003	0.003	0.0015	0.003
La	0.015	0.007	0.0	0.003	0.07	0.007	0.003
Y	0.05	0.015	0.007	0.007	0.03	0.007	0.007
Sc	0.005	0.0015	Trace	0.0015	0.0015	0.003	0.0015
CO	0.007	0.0007	0.0003	0.0015	0.0007	0.0005	0.0007
Pb	0.007	0.003	0.0	0.005	0.003	0.0015	0.015
Ga	0.0015	0.0007	0.00015	0.0005	0.0015	0.0007	0.0007
Nb	0.0015	0.0	0.0	0.0	0.0	0.0	0.0
Yb	0.007	0.0015	0.0007	0.0007	0.0015	0.0007	0.0015
Be	0.0003	0.0	0.0003	0.0003	0.0	0.00015	0.0
Mo	0.0003	0.0	0.0007	0.0	0.0007	0.0007	0.0
Li	0.0	0.015	0.0150	0.0	0.0	0.0	0.007
Ce	0.05	0.0	0.000	0.0	0.07	0.03	0.0
Nd	0.03	0.007	0.0	0.0	0.03	0.015	0.0
Th	0.03	0.03	0.0	0.0	0.03	0	0
Sn	0.010	0.0	0.0	0.0	0.0	0.0	0.0
Sm	0.015	0.0	0.0	0.0	0.0	0.0	0.0
Dy	0.0	0.0	0.0	0.007	0.0	0.0	0.0
Er	0.0	0.0	0.0	0.007	0.0	0.0	0.0
Gd	0.0	0.0	0.0	0.007	0.0	0.0	0.0

a) Elements looked for but not found: Ag, As, Au, Bi, Cd, Eu, Ge, Hf, Hg, Ho, Ln, Ir, Lu, Os, Pd, Pr, Pt, Re, Ru, Sb, Ta, Te, Ti, Tm, W, Zn.

Elements not looked for: Cs, F, Rb.

The values of U and P are omitted.

The slag from phosphorus furnaces is normally wasted. At some plants it is crushed and used as aggregate and ballast for railroads.

6.4 PROCESS DESCRIPTION

The following sections describe the processes involved in the production of phosphate products.

(1*) 6.4.1 Mining

Most of the phosphate rock is mined by open-pit methods. Some producers in western states also practice underground mining.

In Tennessee, Florida, and western states vast deposits of phosphatic limestone are found above, below, and interbedded with phosphate strata. These limestones vary greatly in phosphate content.[6]

A considerable amount of dust is evolved from mining. In preparation of Florida pebble phosphate, approximately one-third of the P_2O_5 in the deposits is discharged as waste. This material consists of clay and finely divided phosphate minerals. Ores are usually covered by 1.2 to 9.1 meters overburden.

In Florida, large electric, dragline excavators equipped with buckets are used for stripping of overburden and mining the ore, which is slurried and pumped to the washing plant.

In Tennessee and western states the ore is mined with small dragline excavators and shovels, then transported to beneficiating plants by trucks.

---

* Numbers refer to corresponding processes in Figure 6.1.

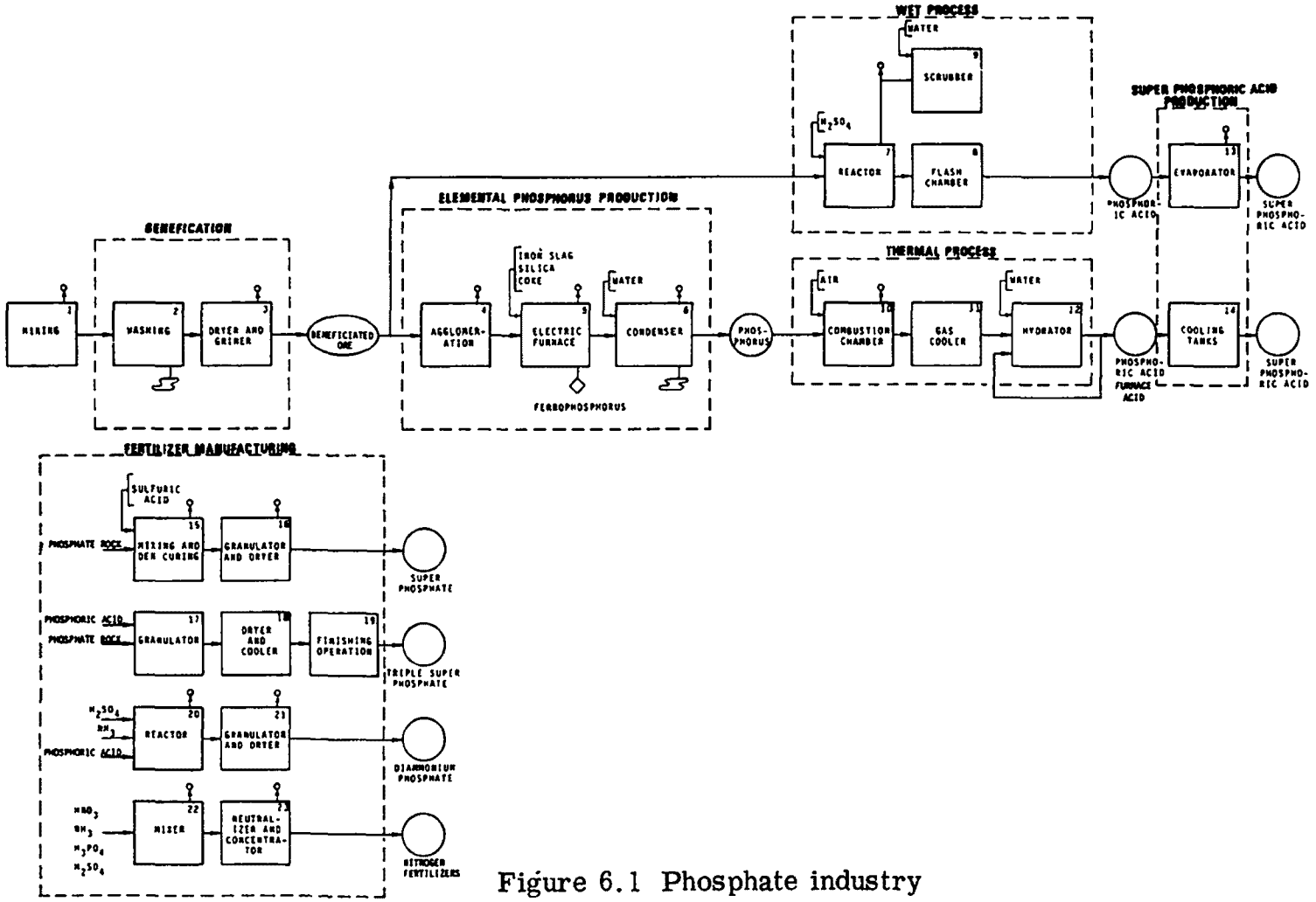

Figure 6.1 Phosphate industry

Top slicing and sublevel stopping methods are used in western underground mines.

6.4.2 Beneficiation

All North Carolina, Florida, and Tennessee ores must be beneficiated before further processing. Much of the western phosphate rock does not need beneficiation. The ore is washed, dried, and ground.

(2) Washing - The sand and clay impurities of ore are removed by washing and screening, by use of a log washer and various other types of classifiers. Mills are used to disintegrate the large clay balls. When required, the ore is further concentrated with flotation agents. In 1968, there were two flotation units and several washing units in operation.

Slime from the washer is discharged to slime ponds. After initial settling, the clear water is returned to the mining and washing operations. The discarded slime contains about 30 percent of mined ore matrix and occupies approximately 50 percent more volume than original phosphate matrix mined. Years of settling is required before the land is reclaimed. Approximately 1.14 tons of slimes are rejected for each ton of high-grade pebble phosphate produced. When the slime is discharged as slurry after flotation, it contains only 2 percent solids. Actually, the material discharged from the washer (solids and water) amounted to larger quantities than the slime. Since the slime solids are colloidal, they contain a higher percentage of water even after they have been settled.[7]

Table 6.5 gives size distributions of slimes from Florida pebble phosphate. Table 6.6 gives chemical and mineralogical analysis of typical phosphate slime.

Table 6.5 Size Distribution of Florida Pebble Phosphate Slimes[7]

Particle Size, Microns	% of Total Weight (Range of Typical Analyses)
Over 44	1 to 3
44/28	1 to 4
28/9	12 to 18
9/3	11 to 14
3/0.3	14 to 27
Under 0.3	44 to 52

Table 6.6 Chemical and Mineralogical Analysis of Typical Phosphatic Slime[7]

Ingredient	%
P_2O_5	20.0
SiO_2	21.0
CaO	18.0
Al_2O_3	20.0
Fe	4.5
F	1.7
Loss on ignition	12.0
Miscellaneous	2.8
Total	100.0
Apatite, $Ca_5(PO_4)_3F$	38.0
Kaolinite, $Al_2O_3 \cdot 2SiO_2 \cdot 2H_2O$[a]	30.0
Wavellite, $4AlPO_4 \cdot 2Al(OHO_3 + 9H_2O)$	15.0
Limonite, $2Fe_2O_3 \cdot 3H_2O$	7.0
Quartz, SiO_2	5.0
Feldspar, $KAlSi_3O_8$	1.5
Dolomite, $CaMg(CO_3)_2$	1.0
Organic (not determined)	1.5
Miscellaneous	1.0
Total	100.0

[a] A more reasonable assumption is that the clay content is montmorillonite and/or attapulgite rather than kaolin.

Phosphatic slimes not only retain significant phosphate values, but also constitute a potential reserve of water. In 1960, treatment of Florida land pebble phosphate rock produced slimes containing at least 30.3 billion liters of water.[8] The Florida phosphate slimes can be used as binder.

(3) Dryer and Grinding - The washed rock is dried to remove moisture and ground to increase total surface area and reactivity.

Emissions from the dryer include particulates and combustion products. Table 6.7 gives emission factors for phosphate rock processing.

The beneficiated material is sent to open storage piles.

Table 6.7 PARTICULATE EMISSION FACTORS FOR PHOSPHATE ROCK PROCESSING WITHOUT CONTROLS[9]

Type of Source	Emissions,[a] lb/ton
Drying	15
Grinding	20
Transfer and storage	2
Open storage piles	40

a) per ton of phosphate rock input.

Barges and railcars are used for transporting beneficiated rock to fertilizer manufacturing centers. The trend is to manufacture the fertilizers at the mine site and ship them directly to consumers.

The beneficiated material is used as fertilizer or further processed to yield higher fertilizers, elemental phosphorus, and phosphoric acid.

6.4.3 Thermal Reduction Method (Elemental Phosphorus Production)

The thermal reduction method involves smelting of phosphate rock with carbon and silica in an electric fur-

nace. Since finely divided phosphate rock in the charge would block the release of phosphorus vapors, the feed is agglomerated by various methods.

(4) Agglomeration - The rock is agglomerated by pelletizing, nodulizing, sintering, briquetting, or flaking. Moisture content of the rock, which is objectionable in the electric furnace charge, is driven off by agglomeration. Most plants in the United States apply the nodulizing method, heating the kiln with oil or natural gas to a maximum temperature of 1200 to 1480°C. Gases released from the nodulizing kiln contain 4 to 12 percent water vapor. Twenty to 45 percent of input fluorine is emitted from nodulizing and 30 to 40 percent of input fluorine is emitted from sintering.[10]

(5) Electric Furnace - The furnace charge contains phosphate rock lumps, coke, and silica. Temperatures in the furnace are maintained at 1260 to 1482°C.[11] Heat is supplied by passage of high-voltage current through carbon electrodes in the furnace. About 12,500 to 13,500 KWH power is consumed in producing a metric ton of elemental phosphorus.[5]

In the furnace, the silica is reacted with phosphorus to produce phosphorus pentoxide (P_2O_5), which in turn produces elemental phosphorus by reacting with carbon. Furnace products include liquids and gases. Table 6.8 gives typical operating data for a phosphorus furnace.

Liquid products of the furnace contain a calcium silicate slag and ferrophosphorus, which are run off sep-

arately. The slag may be sold as ballast, aggregate, or fill. Table 6.9 gives an analysis of typical phosphorus furnace slag.

Table 6.8 OPERATING DATA FOR A PHOSPHORUS FURNACE[5]

Raw materials consumed per kilogram of elemental phosphorus produced	
power, KWH	14.3
phosphatic material, kg	10.0
silica material, kg	1.5
coke material, kg	1.5
Baked carbon electrodes, kg	0.015
Products formed per kb of elemental phosphorus produced	
slag, kg	8.9
ferrophosphorus, kg	0.30
carbon monoxide, kg	2.8
Recovery, as the element, of the phosphorus charged, %	87
Temperature of offgases, °C	370
Temperature of slag at tapping, °C	1480

Table 6.9 AVERAGE ANALYSIS OF TYPICAL PHOSPHORUS FURNACE SLAG[5]

Constituent	Percent	Constituent	Percent
CaO	48.47	MgO	0.48
SiO_2	40.32	P	0.47
Al_2O_3	4.86	Na_2O	0.42
F	2.85	Fe_2O_3	0.25
K_2O	1.08	MnO	0.18
SO_3	0.55		

The gaseous products containing phosphorus, silicon tetrafluoride, carbon dioxide, and large volumes of carbon monoxide are treated for dust removal, then sent to the condenser.

Large amounts of hazardous fumes, evolved during tapping, are presented in the immediate furnace area of the building and escape to the atmosphere. Much of the vanadium present in the ore charge is taken up by the ferrophosphorus.

Pretreatment of the phosphate feed at temperatures in the range of 954 to 1316°C results in liberation of lesser quantities of the rock constituents such as water of hydration, organics, CO_2, and fluorine.[12] The gas velocity ranges from 30 to 183 cm/sec. Average gas temperatures range from 260 to 316°C. Dust loadings range from 9.15 to 34.3×10^{-6} gm/scm^3.[11]

(6) Condenser - The phosphorus is condensed from the furnace gases by spraying water in a tower. Recovery efficiency is a function of exit temperature, cooling rates, and total residence time of gases in the condenser. The liquid phosphorus is run into a sump, where small amounts of impurities are precipitated. Then it is pumped into storage tanks, where the last traces of mud settle to the bottom.

During condensation, the dusts from furnace gases form into sludge, having a typical analysis of 65 percent phosphorus, 25 percent water, and 5 to 10 percent dust. Mostly, the dust is recycled to the furnace. The condenser water,

which is called phossy water, contains significant amounts of phosphorus, much of which is emulsified phosphorus. The phossy water is centrifuged to reduce the phosphorus content to the lowest possible level (7 ppm) and sent to a large settling pond prior to disposal.[10]

6.4.4 Phosphoric Acid Production

Phosphoric acid is produced by two methods: (1) the wet process, which is the most economical but needs purification, and (2) thermal treatment of elemental phosphorus, which yields a product of high purity called furnace acid.

6.4.4.1 Phosphoric Acid Production by the Wet Process - Phosphate rock is treated with sulfuric acid to form dilute phosphoric acid and calcium sulfate. Most of the wet-process phosphoric acid is used for fertilizers.

(7) Reactor - After treatment of the rock with sulfuric acid, the phosphoric acid (30 to 35 percent acid) is separated from the calcium sulfate and other solids by filtration. The slurry is sent to a pond for settling of the gypsum in water.

The product acid is sent to market or further concentrated to 55 percent P_2O_5 content. Table 6.10 gives a typical composition of wet-process acid.

Table 6.10 COMPONENTS OF TYPICAL WET-PROCESS ACID[13]

Component	Weight, %	Component	Weight, %
P_2O_5	53.4	Na	0.2
Ca	0.1	K	0.01
Fe	1.2	F	0.9
Al	0.6	SO_3	1.5
Mg	0.3	SiO_2	0.1
Cr	0.01	C	0.2
V	0.02	solid	2.9
H_2O and other	37.56		

During the reaction, fluorine gases are released as hydrogen fluoride. The hydrogen fluoride reacts with silicon dioxide in the phosphate rock, producing silicon tetrafluoride gas. Fluoride gases are also released from gypsum filteration. Offgases typically contain 5.66 to 14.2 mg/m^3 of SiF_4, and filter effluent contains 0.28 to 0.85 mg/m^3 of SiF_4.[14] They also contain SO_2 and odorous pollutants. Reactor emissions include some particulates.[13] In addition, the fluorides are emitted from the gypsum settling pond at a minimum rate of 0.018 gram per square meter (0.16 lb/acre) of surface area per day. The water from the pond after the gypsum settles out contains a considerable amount of phosphoric acid and is circulated through a cooling pond into the plant.[15]

(8) Flask Chamber - The dilute acid is concentrated by evaporation in two or three vacuum evaporators. The product acid (54 percent P_2O_5) is condensed and stored.

Fluoride-containing gases SiF_4 and HF (2 to 5 percent F) are released and sent to the scrubber.

(9) Scrubber for Fluosilic Acid Recovery - All fluorine-containing gases from the reactor and flash chamber are passed through the scrubber, where they are contacted with recycled fluosilic acid. Part of the scrubber product acid is removed as product and the remainder is recirculated. Most of the product fluosilic acid is sent to storage ponds to prevent pollution of local water supplies. A small amount

is used for water fluoridation or for manufacturing cryolite. In 1970, two companies in Florida developed a method of converting fluosilic acid to hydrofluoric acid. The U.S. Bureau of Mines developed a method yielding a synthetic fluorspar as the product of fluorine-containing gases from the reactor.[16]

6.4.4.2 Phosphoric Acid from Elemental Phosphorus (Thermal Process) - Thermal-process acid is used primarily in the manufacture of industrial phosphates; usage has been confined to products other than fertilizers.

(10) Combustion Chamber - Liquid phosphorus is pumped to the chamber where it is burned in air at temperatures of 1650 to 1930°C to produce P_2O_5. The resulting mixture of phosphorus pentoxide vapor and excess air passes from the combustion tower into a gas cooler. About 75 percent of the P_2O_5 collects in the circulating acid in the combustion tower, and 25 percent is recovered in a waste gas purification unit. If the combustion chamber is made of stainless steel, the weak phosphoric acid is drawn into the chamber to relieve the excess heat.

The emission gases, mainly P_2O_5, N_2, O_2, steam, NO_x, and excess air, are drawn into a gas cooler. They may include phosphine (Ph_3), a highly toxic gas formed by hydrolysis of metallic phosphides present as impurities in phosphorus carriers and storage. If excess air is used, a dense fume containing phosphorus pentoxide (P_4O_{10}) is

formed. Particles in these fumes are submicron in size and the fumes are 100 percent opaque.[17]

The yellow phosphorus raw material is highly toxic. Because it ignites spontaneously in the presence of atmospheric air, special facilities are required for handling. It is always shipped in tank cars and stored under water to prevent combustion.

Phosphorus is transferred from the feed tank to the combustion chamber by a pump at feed rates of 3.8 to 19 liters per minute.[18]

(11) Gas Cooler[19] - In some plants gases from the combustion chamber are drawn into a gas cooler and cooled from 785°C to 180°C by water through internal sprays. The cool gases are passed to a hydrator. No pollutants are emitted.

(12) Hydrator - In the hydrator the P_2O_5 vapors are converted to H_3PO_4 by contact with recycled weak phosphoric acid. This circulating acid also removes heat and collects the acid mist formed. Water is sprayed countercurrently from the top. The acid is precipitated, separated, and stored. Table 6.11 gives a typical analysis of acid produced by the thermal process. Arsenic will appear in the product if it is present in the raw material.

Table 6.11 Typical Analysis of a Commercial Food-Grade Phosphoric Acid[5]

H_3PO_4, %	75.0	H_2S	0.1
P_2O_5, %	54.32	As_2O_3	0.05
Na_2O, %	0.02	Al	0.0
oxygen consumed[b]	20	SO_3	0.0
Fe	2	CaO	0.0
Cl	2	K_2O	0.0
F	0.4	SiO_2	0.0
Cr	0.2	color, APHA	10
Pb	0.2	turbidity, APHA	1
Cu	0.1	odor	none

[a] In ppm, except where otherwise indicated (and except for color, turbidity, and odor).

[b] Required to oxidize phosphorus in lower oxidation states to phosphate.

Since economical operation of the process depends upon the agglomeration of mist particles and subsequent separation from the gas stream, almost all plants are equipped with emission controls. Since the substances are highly corrosive, the operation requires special materials of construction.[14]

The hydrator is the principal emission source in the thermal process. The emissions contain phosphoric acid mist in the form of orthophosphoric acid (H_3PO_4); particle sizes range from 0.4 to 2.6 microns. Emissions also contain 10 to 60 percent water vapor, depending upon the operating conditions.[18]

Median particle size is reported as 1.6 microns, with 13 percent being less than 1 micron in diameter.[14]

A typical flow rate of phosphoric acid mist is about 7.08×10^6 cm^3/sec. The mist particles, which contain 77 percent H_3PO_4 with 2.3 pH, are present at a temperature of 80°C.[20] Gas velocities range from 61 to 244 cm/sec, and temperatures from 66 to 149°C. Concentration of mist varies from 0.11 to 0.8×10^{-6} gm/cm^3.[11]

6.4.5 Superphosphoric Acid (SPA) Production

Production of SPA from wet-process phosphoric acid basically involves the removal of free and bonded water by evaporation; in production from furnace acid, the acid is concentrated by recycling to the hydrator.

6.4.5.1 Superphosphoric Acid from Wet-Process Phosphoric Acid - The 54 percent acid is evaporated in (1) a falling film evaporator or (2) a forced circulation evaporator. (13)

The 54 percent phosphoric acid is pumped into an oil- or natural-gas-fired evaporator, where an acid vapor is produced by boiling and is discharged to a condenser. Table 6.12 gives a typical plant analysis of the phosphoric acid feed and superphosphoric acid product.

(14) 6.4.5.2 Superphosphoric Acid from Furnace Acid[13] - Usually, superphosphoric acid is produced at a conventional furnace acid plant with some alterations or additions.

In cooling of the combustion chamber gases, much less water is sprayed than in production of simple phosphoric acid. The combustion gases enter the hydrator and rise against water and dilute acid. Roughly half the P_2O_5 drops out as superphosphoric acid. The rest leaves overhead as a mist and is collected as less concentrated (dilute) acid. The dilute acid is sprayed back into the hydrator.

The superphosphoric acid then flows to a stainless steel storage tank. A stream of acid is withdrawn for recycling and pumped to the hydrator. Emissions are the same as those from phosphoric acid production.

6.4.6 Normal Superphosphate

Normal superphosphates, the first commercial phosphate fertilizer, contains 16 to 21 percent phosphoric anhydride (P_2O_5). Superphosphate plants in the United States are numerous. The only processes are mixing and den curing.

(15) Mixing and Den Curing - The phosphate rock is mixed with sulfuric acid in a cone mixer and discharged to a den, where

Table 6.12 ANALYSIS OF TYPICAL STREAMS[21]

Item	Phosphoric acid feed, %	Superphosphoric acid product, %
Total P_2O_5	54.2	72.49
Ortho P_2O_5	100.0	31.37
Conversion	0	56.7
Fe_2O_3	1.0	1.33
Al_2O_3	1.9	2.47
MgO	0.3	0.40
SO_3	2.6	1.90
F	1.0	0.30
CaO	0.01	-
K_2O	0.09	-
Na_2O	0.03	-
SiO_2	0.015	-
Solids	1.50	0.37
Specific Gravity (60 F.)	1.7	2.08

it is held for sufficient time to allow the slurry mixture to set into a solid porous form. It is then stored for the acidulation process to go to completion. Most of the plants in the United States use batch methods, although both batch and continuous dens are in use. The ratio of acid to rock in feed to the mixer is about 60 grams of (100 percent) sulfuric acid per 100 grams rock (containing about 33 percent P_2O_5). The resulting superphosphate contains phosphoric anhydrite of 16 to 21 percent P_2O_5 and calcium sulfate of the reaction. About 0.18 KWH of electric power is required to produce 1 metric ton of superphosphate.[22]

Gases released from the acidulation of phosphate rock contain silicon tetrafluoride, carbon dioxide, steam, sulfur dioxide, and particulate. Total fluoride content of stack gases including particulate fluorides is 0.075 gm/kg (0.15 lb/ton) of fertilizer produced.

Cranes and draglines are used for removing superphosphate from the den.

(16) Granulator and Dryer - The cured product is granulated by adding ammonia, sulfuric acid, triple superphosphate, or potash, then dried in dryers fired by oil or natural gas. The product is then cooled and bagged for market.

Emissions include ammonia, SiF_4, HF, NH_4Cl, and fertilizer dust from the granulator; ammonia, fertilizer dust and fuel combustion products from the dryer. The cooling operations produce particulate. Grinding and drying produce 4.5 grams of particulate per kilogram (9 lb/ton) of phosphate.

6.4.7 Triple Superphosphate Production

Triple superphosphate is a highly concentrated fertilizer containing 44 to 51 percent available P_2O_5, nearly 3 times the amount in regular superphosphate. It is made by the action of phosphoric acid on phosphate rock. The resulting product is cured in a den for 1 or 2 weeks. The processes of manufacture are granulating, cooling, and finishing.

(17) Granulator - Metered amounts of the ground phosphate rock and phosphoric acid are fed continuously to the granulator, where reaction and granulation take place. Fine particles of the product are recycled to the granulator.

Following are typical input rates for production of 1 ton of triple phosphate of 46 percent P_2O_5: phosphate rock (75 B.P.L.) 386 kilograms; phosphoric acid (45 percent P_2O_5) 535 kilograms, fuel 35,280 kcal; and power 35 KWH-hr.[22] Exhaust gases contain particulate, HF, and SiF_4. Rate of the fluoride emission is about 0.5 gram fluoride per kilogram (0.10 lb/ton) of product.[9]

(18) Cooler - The granules are fed to a cooler where they are cooled. The fines are screened from the product and recycled to the granulator.

Dust from exhaust gases is recovered and also recycled to the granulator.

(19) Finishing Operations - The product is stored in bulk to cure for 1 to 2 weeks, during which time the granules increase in physical strength. The product is bagged and shipped to market.

6.4.8 Diammonium Phosphate Production

(20) Reaction - Phosphoric acid is reacted with ammonia in the presence of sulfuric acid to produce diammonium phosphate. The sulfuric acid controls the composition of the final product.

(21) Granulator and Dryer - The product of reaction is mixed with more ammonia to produce phosphate granules. The operation emits particulate and large quantities of ammonia. The residual ammonia is recovered by treating the exhaust gases in scrubbers. The granules are dried in an oil- or gas-fired dryer, which emits fluorides, ammonia, and particulate matter. The granules are screened. The oversize product is ground and recycled to the ammoniator along with the fines for product control. The diammonium phosphate is cooled before storing. Ammonia and particulate matter are emitted. The granulator emits about 1 gram (2 lb/ton) of particulate and the dryer and cooler emit approximately 40 grams/kg (80 lb/ton) of particulate matter.[9]

6.4.9 Nitrogen Fertilizers

The major nitrogen fertilizers are ammonium phosphate nitrate, ammonium nitrate sulfate, and nitric phosphate, all of which contain ammonium nitrate. Processes are mixer, neutralizer , and concentrator.

(22) Mixer - For production of ammonium phosphate nitrate, nitric acid, phosphoric acid, sulfuric acid, and ammonia are mixed. For other products, no phosphoric acid is used. Exhaust

gases from the mixer contain ammonia and particulate matter.

(23) Neutralizer and Concentrator - The acids are neutralized with excess ammonia, granulated, dried, cooled, and conditioned before storing. Exhausts contain particulate and combustion products resulting from burning of oil or gas in the dryer.

Very few plants produce nitric phosphate in the United States.

In addition to the fertilizers described here, many other phosphate-containing fertilizers are produced. Important among them are sodium polyphosphates and potassium phosphates. Emissions are about 1.38 grams of dust per kilogram (2.75 lb/ton) of product and 1.78 grams of ammonia per kilogram (3.55 lb/ton) of product.[23]

Table 6.13 gives data on fluorine emissions from various processes of the phosphate rock industry.

6.5 MAJOR POLLUTANT SOURCES

Many processes in the phosphate rock industry are responsible for release of particulate and gases, some of which are toxic in nature and almost all companies apply some degree of emissions control. The following are the most significant sources of emission.

° Phosphate Mining and Washing Operations - Phosphate mining and washing generate an equivalent amount of phosphate-bearing slimes to the amount of ore mined. These slimes contain about 3 to 5 percent of very fine clay. This

problem exists only in central Florida where 80 percent of U.S. phosphate is produced. At present the slimes are impounded in special ponds. Since these slimes exist in the ponds for 10 to 25 years there is always a potential for surface and ground water pollution.

° Hydrator (Phosphoric Acid Production by Thermal Process) - Primary pollutant is acid mist which is discharged at a rate of 67.5 grams per kilogram (135 lb/ton) of P_2O_5 produced. Many industries control the emissions using equipment with 99.5 percent efficiency. Still the hydrator is the principal emission source in the thermal process. The acid mist is present in the form of orthophosphoric acid (H_3PO_4); particle size ranges from 0.4 to 2.6 microns. A typical flow rate for the offgas is 7.08×10^6 cm^3/sec.

° Reactor (Phosphoric Acid Production by Wet Process) - Primary air pollutants are rock dust, fluorides, carbon dioxide, silicon tetrafluoride, hydrogen fluoride, and phosphoric acid mist. Most modern wet-process phosphoric acid plants provide a complete collection system through one scrubber. Emissions from a system of this type are 0.025 to 0.05 gram fluorine per kilogram (0.05 to 0.1 lb/ton) of P_2O_5 produced.

° Dryer and Cooler (Diammonium Phosphate Production) - The emission factor is 97.5 grams per kilogram (195 lb/ton) of product. Emissions include ammonia and fluorides. In 1970, after controlling 90 percent of emissions, about 145,200 metric tons were emitted from treating 16.33 million metric tons.

Table 6.13 FLUORINE EMISSIONS FROM VARIOUS PROCESSES[10]

Process	Process materials	Process equipment	Fuel used	Water vapor in gases, %	Maximum temperature °C	Percent of input fluorine emitted
Calcining phosphate rock (beneficiation)	Phosphate Rock	Rotary kiln	Oil	8-10	1090 820	3 Almost nil
Calcining phosphate rock (defluorination)	Phosphate rock	Rotary kiln	Oil	13	1400-1450	50-70 75
Calcining phosphate rock (defluorination)	Phosphate rock, silica	Rotary kiln	Oil	20*	1480-1590	98
Nodulizing phosphate rock	Phosphate rock	Rotary kiln	Oil Coal CO gas	4-12	1200-1480	20-45
Sintering phosphate rock	Phosphate rock	Dwight-Lloyd machine	Coke		1400*	30 35-40
Calcining phosphate rock	Phosphate rock briquettes	Rotary kiln	Oil Coal CO gas	4-12*	1000-1040	Almost nil
Calcining phosphate rock	Phosphate rock pellets		CO gas	4*		14
		Shaft kiln	Propane-butane	8-12*	1090-1200	14
		Rotary kiln	Oil	8-12*	1150-1180	28
Defluorinating molten phosphate rock	Phosphate rock, silica	Electric furnace		Low	1600	Small

* Values estimated.

Table 6.13 (continued). FLUORINE EMISSIONS FROM VARIOUS PROCESSES

Process	Process materials	Process equipment	Fuel used	Water vapor in gases, %	Maximum temperature °C	Percent of input fluorine emitted
Defluorinating molten phosphate rock (cont'd.)	Phosphate rock, silica	Hearth Furnace	Oil	8-12*	1500-1550	84-95
		Electric furnace (for melting)				
		Hearth furnace (for defluorination)	Oil	12	1550-1600	90
				12	1600	92-96
		Shaft furnace	CO gas	4	1430-1540	70
			Oil	12-14	1430-1540	90 or greater
Phosphoric acid manufacture	Phosphate rock, coke	Electric furnace		Low	1480*	35 25 20-30
	Phosphate rock, silica	Blast furnace	Coke		1740-1850	52 30
Elemental phosphorus manufacture	Phosphate rock, silica coke	Electric furnace		Very Low	1470*	9.6

* Values estimated.

Table 6.13 (continued). FLUORINE EMISSIONS FROM VARIOUS PROCESSES

Process	Process materials	Process equipment	Fuel used	Water vapor in gases, %	Maximum temperature, °C	Percent of input fluorine emitted
Calcium-magnesium phosphate manufacture	Phosphate rock, olivine	Electric furnace		Low	1450-1550	27-33 11
	Phosphate rock, olivine, silica	Electric furnace		Low	1450-1550	27-57
	Phosphate rock, olivine	Electric furnace		Very Low	1500-1600	10-20
Manufacture of calcium meta-phosphate		Combustion chamber and absorp, tower	White phosphorous	10-14	1100	80-85
Defluorination of superphosphate	Triple superphosphate	Rotary kiln	Oil	5.2-9.8	370-390	78-82
Manufacture of superphosphate	Phosphate rock, sulfuric acid	Mixer and den		18-20	100-115	16-42 30-35

REFERENCES FOR CHAPTER 6

1. Lewis, R.W. Phosphorus. In: Mineral Facts and Problems. Bureau of Mines Bulletin Number 650. United States Department of the Interior. Washington, D.C. 1970.

2. Lewis, R.W., and W. F. Stowasser. Phosphate Rock. In: Minerals Yearbook. U.S. Bureau of Mines. 1971.

3. Engineering and Mining Journal. March 1974.

4. Cathcart, J.B. Economic Geology of the Chicora Quadrangle, Florida. U.S. Department of Interior, Washington, D.C. Geological Survey Bulletin No. 1162-A. 1963.

5. Kirk-Othmer. Encyclopedia of Chemical Technology. New York, John Wiley and Sons, Second Edition. 1967.

6. Waggaman, W.H., and E.R. Ruhlman. Conservation Problems of the Phosphate Industry. Industrial and Engineering Chemistry. Vol. 48, No. 3. March 1956.

7. Typer, P.M., and W. H. Waggaman. Phosphatic Slime. A Potential Mineral Asset. Industrial and Engineering Chemistry. Vol. 46, No. 5. May 1954.

8. Gary. J.H., F.L. Field, and E.G. Davis. Chemical and Physical Beneficiation of Florida Phosphate Slimes. U.S. Department of the Interior. Washington, D.C. Bureau of Mines Report of Investigation Number 6163. 1963.

9. Compilation of Air Pollutant Emission Factors. Environmental Protection Agency, Raleigh, North Carolina. Publication Number AP-42. April 1973.

10. Semrau, K.T. Emission of Fluorides from Industrial Processes. Journal of Air Pollution Control Association. August 1957.

11. Oglesby, Sabert, Jr. A Manual of Electrostatic Precipitator Technology. Southern Research Institute. Alabama 35205. CPA Contract Number 22-69-73.

12. Bryant, H.S., N.G. Holloway and A.D. Silber. Phosphorus Plant Design. New Trends. Industrial and Engineering Chemistry. Vol. 62, No. 4. April 1970.

13. Manufacturing Chemists' Association, Inc. and Public Health Service. Atmospheric Emissions from Wet-Process Phosphoric Acid Manufacture. U.S. Department of Health, Education and Welfare. Publication Number AP-57. April 1970.

14. Lund, H.F. Industrial Pollution Control Handbook. New York. McGraw Hill Book Company, 1971.

15. Cross, F.L., and Roger W. Ross. New Developments in Fluoride Emissions from Phosphate Processing Plants. Journal of Air Pollution Control Association, January 1969. Vol. 19, No. 6.

16. Phosphate Plant Waste Looms as Hydrofluoric Acid Source. Chemical Engineering, May 4, 1970.

17. Danielson, J.A. Air Pollution Engineering Manual. Air Pollution Control District. County of Los Angeles, May 1973.

18. Manufacturing Chemists' Association, Inc. and Public Health Service. Atmospheric Emissions from Thermal-Process Phosphoric Acid Manufacture. U.S. Department of Health, Education and Welfare. Publication Number 48. October 1968.

19. Noyes, Robert. Phosphoric Acid by Wet Process.

20. Rea, R.D. Plume Free Stacks Achieved in H_3PO_4 Production. Chemical Processing. January 1971.

21. Stern, D.R., and J. D. Ellis. Processing Problems Pared for Superphosphoric Acid. Chemical Engineering. March 23, 1970.

22. Shreve, R.N. Chemical Engineering Series. New York. McGraw Hill Book Company, 3rd Edition. 1967.

23. Information provided by Tennessee Valley Authority. Muscle Shoals, Alabama 35660.

7.0 POTASH

7.1 INDUSTRY BACKGROUND[1]

Approximately 50 percent of the nation's supply of potash is produced domestically. The remainder is imported, mainly from Canada, and also from West Germany, France, Italy, and Spain.

Agriculture is the major consumer, accounting for approximatley 95 percent of the total consumption. The remainder is consumed in the manufacture of dyes, detergents, soaps, glass, and analytical reagents. The future for potassium, both in the United States and the rest of the world, depends upon agriculture.

Brines and bedded deposits are the two types of domestic sources of potash. The bedded deposits in New Mexico produce approximately 84 percent of the nation's domestic supply. The potash ores in these areas, which contain 20 to 25 percent K_2O, are gradually depleting and are estimated to provide only a 10-year supply. Other states producing potash are Utah and California.

In 1970 there were seven producers near Carlsbad, New Mexico, one in Utah, and one in California. Six of the New Mexico producers have holdings in Canadian potash deposits.

The cost of transporting potash from refineries to consumer areas is a major expense of the industry. The possibility of transporting potash from Canada to Chicago through pipelines was investigated several years ago.

Currently, the U.S. Bureau of Mines is engaged in research programs to improve potash ore processing and to develop a modified flotation process for the economic recovery of potassium minerals from the high-clay minerals and complex ores of New Mexico.

Potassium-bearing lands, including the brine deposits in California and Utah, are owned mainly by state or the federal government and are leased by individual firms.

New technological developments have changed production techniques. Drilling and blasting techniques have been replaced by continuous borer mining. The magnitude of operations has also increased markedly. Before 1960, plant production ranged from 91,000 to 454,000 metric tons per year. Today plants with yearly outputs of less than 1 million metric tons per year are the exception.[2]

World demand for potash by the year 2000 could be three to five times today's demand.[2]

Table G-1 in Appendix G lists companies and their production.

7.2 RAW MATERIALS

The term "potash" is applied to potassium compounds or any of the potassium-containing minerals. Much of the potash occurs in chemical compounds that have no present

economic value. Potash is found throughout the world in soluble and insoluble forms. Only the soluble forms are economically attractive to process, primarily as chlorides and sulfates; potassium chloride is by far the most important potash salt. Sylvinite ore, a mechanical mixture of sylvite (KCl) and halite (NaCl), is a natural ore for potassium.[3] Table 7.1 lists all potash minerals and their composition. Tables 7.2 and 7.3 show the chemical composition of potash ores in several areas of the United States.

7.2.1 Description of the Typical Potash Ores

Sylvite is the principal and most important potash ore because of its availability and high K_2O content. It is usually found mixed with sodium chloride. A typical analysis is sylvite (KCl) 23 percent, halite (NaCl) 73 percent, and other, 4 percent. The color ranges from clear to brick red, and the content also varies considerably. This ore is found in commercial grades near Carlsbad, New Mexico. For the last four decades, vast tonnages of high-grade, low-clay-content ores have been mined; however, these deposits are rapidly diminishing, leaving high-clay, low-grade reserves of over 667 million metric tons.

Langbeinite ($K_2SO_4 \cdot 2MgSO_4$) is theoretically composed of 42.1 percent potassium sulfate (K_2SO_4) and 57.9 percent magnesium sulfate ($MgSO_4$). Its color varies from clear to gray.

Polyhalite ($K_2SO_4 \cdot MgSO_4 \cdot 2CaSO_4 \cdot 2H_2O$) occurs in various colors: white, light and dark gray, salmon, orange, brown,

Table 7.1 POTASH MINERALS[4]

Type of ore	Minerological name	Composition	Equivalent K_2O content in percent
Chlorides	Sylvite	KCl	63.1
	Carnallite	$KCl.MgCl_2.6H_2O$	17.0
Chloride-Sulfates	Kainite	$MgSO_4.KCl.3H_2O$	18.9
Sulfates	Alunite	$K_2(Al(OH)_2(6)SO_4)_4$	11.4
	Polyhalite	$K_2SO_4.MgSO_4.2CaSO_4.2H_2O$	15.5
	Langbeinite	$K_2SO_4.2MgSO_4$	22.6
	Leonite	$K_2SO_4.MgSO_4.4H_2O$	25.5
	Syngenite	$K_2SO_4.CaSO_4.H_2O$	28.8
	Krugite	$K_2SO_4.MgSO_4.4CaSO_4.2H_2O$	10.7
	Apthitalite	$(K,Na)_2SO_4$	42.5
	Picromerite	$K_2SO_4.MgSO_4.6H_2O$	23.3
	Kalinite	$K_2SO_4.Al_2(SO_4)_3.24H_2O$	9.9
Nitrates	Niter	KNO_3	46.5
Silicates	Leucite	$KAl(SiO_3)_2$	21.4
	Feldspars:		
	Orthoclase	$KAlSi_3O_8$	16.8
	Anorthoclase	$(Na,K)AlSi_3O_8$	2.4-12.0
Micas	Muscovite	$H_2KAl_3(SiO_4)_3$	11.8
	Biotite	$(H,K)_2(Mg,Fe)_2Al_2(SiO_4)_3$	6.2-10.1
	Phogopite	$(H,K,Mg,F)_3Mg_3Al(SiO_4)_3$	7.8-10.3
	Lepidolite	$H,Li(Al,OH,F_2)Al(SiO_3)_3$	10.7-12.3
	Zinnwaldite	$H_2K_4Li_4Fe_3Al_8F_8Si_{14}O_{42}$	10.6
	Roscoelite	$H_8K(Mg,Fe)(Al,V)_4(SiO_3)12$	7.6-10.3
	Glauconite	$KFeSi_2O_6.nH_2O$	2.3- 8.5
	Carnotite	$K_2O.2U_2O_3.V_2O_5.3H_2O$	10.3-11.2
	Nephelite	$K_2Na_6Al_8Si_9O_{34}$	0.8- 7.1

Table 7.2 COMPOSITION OF POTASH

Area	Composition in Percentage	
Carlsbad - New Mexico	Polyhalite	
	K_2SO_4	21.93
	$MgSO_4$	15.15
	$CaSO_4$	34.29
	Anhydrite	
	$CaSO_4$	8.17
	NaCl	12.91
	H_2O	4.53
	Fe_2O_3	2.29
	$MgCO_3$	0.73
	Total Mineral	
	Polyhalite	75.9
	Halite	12.9
	Anhydrite	8.2
	Others	3.0
Eddy County - New Mexico	Langbenite	
	K_2O	22.37
	MgO	19.15
	SO_3	57.44
	Na_2O	0.48
	Insoluble in water	0.05
Bonneville Brine Utah	NaCl	18 - 24.0
	KCl	0.8 - 1.2
	$MgCl_2$	0.9 - 1.2
	$MgSO_4$	0.2 - 0.3
	$CaSO_4$	0.3 - 0.4
	LiCl	0.03 - 0.04

and shades of red. Polyhalite contains potassium oxide (K_2O) 15.6 percent; magnesium oxide (MgO) 6.6 percent; calcium oxide (CaO) 18.6 percent; sulfur trioxide (SO_3) 53.2 percent; and water (H_2O) 6.0 percent.

Table 7.3 TYPICAL MINEROLOGICAL ANALYSIS OF POTASH ORE OF CARLSBAD-NEW MEXICO

Component	Percentage (range)
Sylvite	23-28
Halite	71
Langbeinite	Trace-2
Kainite	0.1-0.5
Leonite	Trace-0.1
Kieserite	Trace-1.0
Carnallite	--
Polyhalite	0.15
Anhydrite	--
Insolubles	0.5-1.5

7.3 PRODUCTS

Four potassium salts are produced in the United States for use as fertilizers: potassium chloride, potassium sulfate, potassium magnesium sulfate, and potassium nitrate. The chloride is available in four grades, standard, coarse, granular, and soluble, each containing a minimum of 60 percent K_2O. A chemical-grade, or refined, potassium chloride, that is produced in the United States contains

99.9 percent KCl. A small quantity of fertilizer with 20 to 22 percent K_2O content is also made for special uses. The potassium sulfate contains a minimum of 50 percent K_2O. The potassium magnesium sulfate contains 22 percent potassium oxide equivalent and 18 percent magnesium oxide. Potassium nitrate is manufactured from chloride by only one firm (South West Potash Company), at Vicksburg, Mississippi. Potassium nitrate is mostly imported from Chile, along with potassium-sodium nitrate mixtures.

Ore mined in Carlsbad, New Mexico, contains small quantities of cesium and rubidium, but presently they are not recovered. Small quantities of magnesium oxide and rubidium chloride are recovered as by-products with langbeinite.

7.4 PROCESS DESCRIPTION

Potash is recovered from bedded deposits and brine solutions. This section describes only the processing of potash from bedded deposits.

7.4.1 Mining

(1*) Potash ores are usually processed in refineries adjacent to the mines. The bedded deposits of New Mexico and Utah are all mined underground. The ore is mined through shafts in a manner similar to that used for coal. In mining of langbeinite, 15 to 20 percent of the material is classed as waste and left in the mine. This material is loaded onto shuttle cars and transported to an abandoned part of the mine.

* Numbers refer to corresponding processes in Figure 7.1.

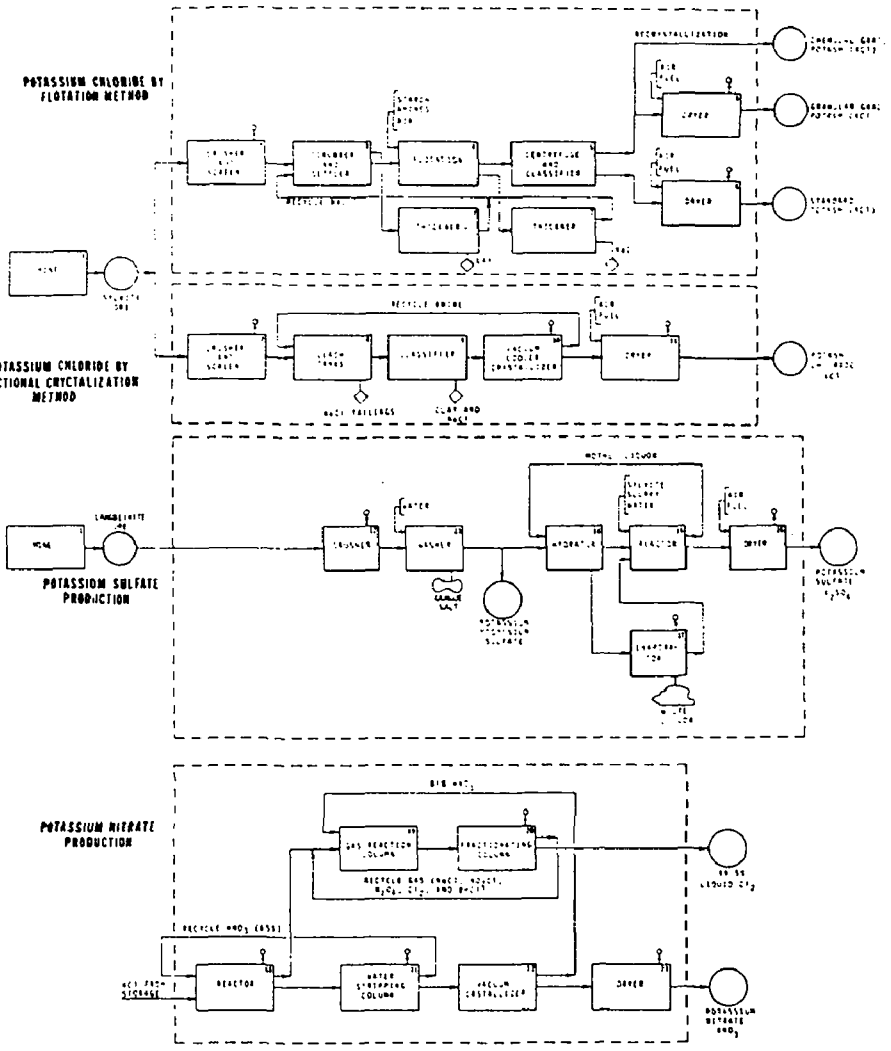

Figure 7.1 Potash industry

Ore is moved from the face to mine cars by caterpillar-mounted conveyor-type loaders and rubber-tired double-trolly shuttle cars. Main haulage is by trolley locomotives on rails. The refining of mined ores for different potassium salts is described in the following sections. Figure 7.1 shows the processing steps.

7.4.2 Potassium Chloride Production

The main source of potassium chloride is sylvite, which is processed by two basic methods: flotation and fractional crystallization.

7.4.2.1 Flotation Method - Most of the potash in the United States is recovered by flotation. In general, potash is manufactured by mixing the ore with a recycled brine solution, disliming it to remove clay impurities, and then conditioning it by using flotation reagents to remove other impurities, including sodium chloride. This process consists of the following steps:

(2) Crusher and Screen - Crushing and screening are required to unlock potassium chloride crystals. Since the flotation action is affected by the surface/weight ratio of the ore particles, very efficient crushing is required. The ore is crushed either at the mine site or at the refinery plant. After crushing and screening, the material is sent to scrubbing units. A portion of the crushed and screened ore is taken off for direct shipment to market as fertilizer. About 12.5 grams of particulate of the same composition as the ore may be emitted from processing one kilogram (25 lb/ton) of ore.

(3) Scrubber and Settler - The finely crushed material is scrubbed with recycled saturated brine to prepare a solution from which the product is concentrated. The scrubbed material is introduced to classifiers, with the addition of more recycled brine. The overflow brine is transferred to a thickener for removal of clay. Then the clear brine solution is recycled to the scrubber. Since scrubbing and settling are wet operations, there are no atmospheric emissions. However waste clay is produced which is disposed of in a dump.

(4) Flotation - Any of the remaining clay from the ore slurry is neutralized by adding a depressant, such as starch. Then, an aliphatic amine collector is added to selectively coat one of the constituents (KCl or NaCl), generally the KCl of the ore. Air is bubbled through the slurry to lift and float the coated particles; uncoated particles sink to the bottom. The cleaner concentrate floating on the surface is separated and treated further. The bottoms material can be processed further in a thickener to recover NaCl.

The tailings containing sodium chloride salt are sent to a large disposal area, always located close to the refinery. These areas, covered with tailing salts, are incapable of supporting plant life. Because these refineries are located in sparsely populated areas, the tailings have not been considered an environmental pollution problem. Typical analysis of a flotation grade of potassium chloride is given in Table 7.4.

Table 7.4 TYPICAL ANALYSIS OF FLOTATION GRADE OF POTASSIUM CHLORIDE[6]

Assay	%
Na	1.0
Ca	0.05
Mg	0.1
Fe	0.05
Al	0.03
SO_4	0.3
Water insoluble	0.5
HCl insoluble	0.3
H_2O	0.3

(5) Centrifugation and Classification - The concentrate from the flotation unit is centrifuged to minimize brine losses. Then the solid mass produced is classified. The underflow, which is standard potash with 60 percent K_2O content, is sent to a drier. The overflow material, which is granular-grade potash, is dissolved and recrystallized to produce a chemical grade of potassium chloride (99.9%). The remainder is sent to the drier.

(6) Dryers - After classification, the standard and granular products are dried and cooled before storing for market.

The dryers are heated by oil or natural gas. Particulates are emitted from the dryer but emission rate data are not available.

(7) Thickener - The overflow of scrubber-classifiers is transferred to a thickener, where clay is separated and the clear

brine solution is recycled to the scrubber. The slurry tailings from the flotation cells, are dewatered in thickeners, from which the overflow is sent to brine storage and the underflow to the centrifuger. The centrifuged product, NaCl, is stored. No pollutants are known to be emitted.

7.4.2.2 Fractional crystallization method - This method is based on solubility/temperature relationships of two main ore constituents; potassium and sodium chlorides. In solutions saturated with both salts, the solubility of potassium chloride increases rapidly with the temperature, while that of sodium chloride remains constant.

(8) Hot Leach - Hot recycled brine, which is nearly saturated with NaCl, is fed to the system, in which the crushed ore is carried countercurrent to the hot brine flow. The KCl and a small portion of NaCl are dissolved, leaving the bulk of NaCl solids unaffected. The pulp is dewatered in a classifier and centrifuged. The solids are rejected. The hot brine is sent for further treatment. Except for the solid tailings of NaCl, there are no known emissions.

(9) Classifier - The hot brine is classified to remove clay and slimes in an insulated thickener. The underflow is rejected. Further treatment in a second thickener removes the sodium chloride, which is separated by centrifugation. Large volumes of mud-contaminated clay and sodium chloride from the underflow are dumped into the waste area refinery unit. To minimize losses of KCl, the wash liquor from the centrifuger is recycled to the thickener. The cleaner, hot saturated brine is pumped to a vacuum cooler crystallizer.

(10) Vacuum Cooler Crystallizer - Most of the hot, saturated brine is evaporated, leaving a concentrated brine containing KCl crystals. The evaporate is condensed and returned to leach tanks as mother liquor. The remaining brine containing crystals is centrifuged to separate the crystals. The wash liquor is added to the crystallizer.

Particulate, with the composition of the mother liquor, may be evolved.

(11) Dryer - The final product, potassium chloride, is dried in an oil- or gas-fired dryer and stored.

Particulate may be emitted and may not exceed 5 grams per kilogram (10 lb/ton) of crystals. The degree of control should be high since the material is valuable.

7.4.3 Potassium Sulphate Production

The product of 90 to 95 percent potassium sulfate is prepared by hydrating a pulverized langbeinite ore and combining it with sylvite, to eliminate magnesium by precipitation. The processes involved are described in the following sections.

7.4.3.1 Beneficiation - The beneficiation of the langbeinite ore, which includes crushing and washing, presents no known serious pollution problem.

(12) Crushing - Mine-run ore is dry-ground in a mill operating in closed circuit, with vibrating screens. Mostly hammer mills are used. About 15 grams of particulate per kilogram (30 lb/ton) of ore is emitted to the atmosphere.

(13) Washing - The crushed ore is introduced into a wash unit. The chloride gangue salts are dissolved from the ore by wash water by means of solubility differences. A continuous countercurrent washing process gives maximum solution of the gangue salts in minimum contact time.

The finished langbeinite, which is 96 percent $K_2SO_4 \cdot 2MgSO_4$, is marketed as potassium magnesium sulfate or further processed for potassium sulfate by a base exchange process.

The overflow containing gangue is sent to a waste disposal area.

(14) 7.4.3.2 Production - Hydrator - The finely pulverized langbeinite is agitated with potassium sulfate mother liquor, to produce schoenite ($K_2SO_4 \cdot MgSO_4 \cdot 6H_2O$) or leonite ($K_2SO_4 \cdot MgSO_4 \cdot 4H_2O$), the product determined by temperature and by magnesium chloride content of the waste liquor. The products of hydration are transferred to a centrifuge, where the cake product (leonite) is separated from the liquid. The solid cake is further treated and the wash liquor is rejected or evaporated to recover chlorides. The progress of the reaction can be estimated by examining typical compositions of mother liquor and waste liquor at 25°C, as indicated in Table 7.5.

(15) Reactors - The solid cake is mixed and agitated at carefully controlled temperatures with sylvite and water to produce potassium sulfate as a solid and a mother liquor for use in the hydrator. Temperature strongly influences yield in this

reaction. Solubility of the potassium rises rapidly, and the yield decreases, with increase in operating temperature. The optimum temperature is 25°C. The reaction product is treated in a centrifuger to separate the solid product from the mother liquor. The solid product is sent to a dryer, and the mother liquor is recycled directly to the hydrator. The emissions are negligible.

Table 7.5 A TYPICAL ANALYSIS OF MOTHER LIQUOR AND WASTE LIQUOR FROM HYDRATOR[7]

Stable solid - phases, %	Mother liquor schoenite, K_2SO_4, KCl	Waste liquor schoenite
$MgCl_2$	7.98	14.82
KCl	14.87	9.84
$MgSO_4$	5.28	5.26
H_2O	71.87	70.08

(16) Dryer - The potassium sulfate product is dried in a kiln heated by oil or gas. Twenty-five to 30 grams of particulate may be evolved per kilogram (50 to 60 lb/ton) of product.

(17) Evaporator and Cooler - The mother liquor from the hydrator is evaporated to a point where, on cooling to 30°C, the liquor is saturated with sodium chloride and the mixed salts are separated. These mixed salts (predominatly potassium chloride, with some leonite), are suitable for production of potassium sulfate and are returned to the reaction tanks.

The liquid containing sodium chloride is rejected. Particulates are emitted but emission rate data are not available.

7.4.4 Potassium Nitrate Production[8]

Only one plant in the United States produces potassium nitrate by reacting potassium chloride and nitric acid. The process also recovers 99.5 percent of the liberated chlorine. The sequence is described in the following section.

(18) Reactor - The potassium chloride is reacted in an agitated tank, with 65 percent nitric acid vapor, to produce potassium nitrate by the reaction: $3KCl + 4HNO_3 \quad 3KNO_3 + NOCl + Cl_2 + 2H_2O$. The nitrosylchloride (NOCl) and chlorine, present in a gaseous phase, are sent to a gas reaction column. The product, which is a solution of HNO_3 and KNO_3, is passed to an adjacent column. The hot nitric acid vapors are introduced into the column, to effectively strip the solution of chloride and chlorine, to a concentration of 0.004 percent chlorine or lower. This stripping action is required to protect the stainless steel equipment in which the solution is subsequently processed. The gases emitted may contain chlorine, nitrosylchloride, and nitrylchloride.

(19) Gas Reaction Column - The gases from the reactor are introduced into the column, where 81 percent HNO_3 in vapor form and recycled gases containing NOCl, NO_2Cl, N_2O_4, Cl_2 and BrCl are added. Most of the NOCl is converted to NO_2. The overflow gases containing chloride (Cl_2), nitrosylchloride (NOCl), and nitrylchloride (NO_2Cl) are liquefied by con-

densation. The amount of bromine impurities in the KCl may present themselves in the overflow as BrCl.

Composition of the effluent from the column may include all the overflow gases.

(20) Fractionating Column - The liquefied gases are fractionated; first to separate 99.5 percent chlorine, then nitrogen tetroxide. The chlorine is stored and the N_2O_4 (99.5%) is used in HNO_3 absorption towers to convert 55 percent nitric acid to 65 percent HNO_3. The remaining gases are recycled to the gas reaction column.

(21) Water Stripping Column - The solution containing KNO_3 and 55 percent HNO_3, in the ratio of approximately 1:4, is introduced into the column, where 65 percent HNO_3 is separated in vapor form from the concentrated solution of KNO_3 in HNO_3. Later, nitric acid is condensed and recycled to reactor tanks. The KNO_3 solution (90 parts per 100 parts of 82% HNO_3), is introduced to the vacuum crystallizer.

Nitric acid mist is emitted.

(22) Vacuum Crystallizer - The crystallizer produces large crystals of technical grade (99.3%) KNO_3, which are centrifuged, and 81 percent HNO_3, which is recycled to the gas reaction column.

(23) Dryer - The final potassium nitrate product is passed through a direct-fired dryer, cooled, and stored. Oil or gaseous fuel is used. Particulate is emitted and may not exceed 5 grams per kilogram (10 lb/ton) of product.

7.5 MAJOR POLLUTANT SOURCES

About 84 percent potash is produced in a low populated area of 142 square kilometers (55 square miles) at Carlsbad, New Mexico. Disposal areas where large amounts of sodium chloride tailings are dumped become incapable of supporting any plant life.

Potash plants in Utah are similarly located, but care must be taken to prevent pollution of the Colorado River.

REFERENCES FOR CHAPTER 7

1. Lewis, R.W. Potassium, In: Mineral Facts and Problems. U.S. Department of the Interior, Washington, D.C. Bulletin No. 650. 1970.

2. Mitchell, J.B. Population, Politics and Potash. Mining Engineering. May 1972.

3. Johnson, A.B. and others. Beneficiation of High Clay Potash Ore by Flotation. Bureau of Mines, Technical Progress Report. No. 41. September 1971.

4. Industrial Minerals and Rocks. Seeley W. Mudd Series. New York, American Institute of Mining, Metallurgical and Petroleum Engineers, 1960.

5. Johnson, B. U.S. Bureau of Mines Information Circular. No. 7277. April 1944.

6. Kirk and Othmer. Encyclopedia of Chemical Technology. New York, New York. 1968.

7. Harley, G.T., and G. E. Atwood. Langbeinite... Mining and Processing. Industrial and Engineering Chemistry. Vol. 39. January 1947.

8. Spealman, M.L. New Route to Chlorine and Saltpeter. Chemical Engineering. November 8, 1965.

8.0 BORON COMPOUNDS

8.1 INDUSTRY BACKGROUND[1,2,3]

Boron is used mainly in the form of its many compounds, of which borax (sodium borates) and boric acid are the most common. Uses of boron compounds in the order of decreasing importance include production of glasses, enamels, soaps and detergents, agricultural chemicals, fluxes for metal working, abrasives, medicines, pharmaceuticals, and many miscellaneous applications.

The United States is the world's largest producer of boron compounds, supplying 71 percent of the total demand, and the largest consumer, requiring 36 percent of the total demand. In 1971, the United States produced 949,800 metric tons of boron compounds of which about one-half was exported. The United States imported only 6350 metric tons of boron compounds (colemanite) during the same period.

Five companies account for most of the boron compounds produced in the United States. All are located in California, which provides the entire domestic production of boron minerals. Three are located on Searles Lake in San Bernardino County, producing boron compounds as coproducts from the brines of the lake. The largest producer is located in Kern

County, and the other source is in the Furnace Creek district of Inyo County. At this location the boron is mined from deposits. Table H-1 in Appendix H lists the principal producers and their capacities.

Research continues on new uses of boron compounds. Possible applications include the use of boron as reinforcement in aircraft structures and the use of colemanite as a substitute for fluorspar in the BOF steel-making processes.

8.2 RAW MATERIALS

Elemental boron is a black or brownish powder in the amorphous form and a black, hard, brittle solid in the crystalline form. The elemental form is not encountered in nature. Boron usually occurs as a hydrated borate or as borax in brines. Compositions of the various boron minerals are summarized in Table 8.1.

Table 8.1 PRINCIPAL BORON-CONTAINING MINERALS[2]

Mineral	Composition
Borax (tincal)	$Na_2B_4O_7 \cdot 10H_2O$
Kernite (rasorite)	$Na_2B_4O_7 \cdot 4H_2O$
Colemanite (borocalcite)	$Ca_2B_6O_{11} \cdot 5H_2O$
Ulexite (boronatrocalcite)	$CaNaB_5O_9 \cdot 8H_2O$
Priceite (pandermite)	$5CaO \cdot 6B_2O_3 \cdot 9H_2O$
Boracite (stassfurtite)	$Mg_7Cl_2B_{16}O_{30}$
Sassolite (natural boric acid)	H_3BO_3

A description of the more important minerals follows.

Borax (sodium tetraborate decahydrate) - composed of 36.6 percent B_2O_3, 16.2 percent Na_2O, and 47.2 percent H_2O. Calcining increases the B_2O_3 content to 69.2 percent. Borax occurs in the Kern County deposits and in solution in Searles Lake.

Kernite (sodium tetraborate tetrahydrate) - composed of 51.1 percent B_2O_3, 22.6 percent Na_2O, and 26.3 percent H_2O. Calcining increases the B_2O_3 content to 69.2 percent. Kernite occurs mainly in the Kern County deposits.

Colemanite (calcium borate penthydrate) - composed of 50.9 percent B_2O_3, 27.2 percent CaO, and 21.9 percent H_2O. Calcining produces 65.2 percent B_2O_3. Colemanite occurs in the deposits in Inyo County.

8.3 PRODUCTS

The primary commercial compounds of boron are sodium tetraborate decahydrate, sodium tetraborate pentahydrate, anhydrous sodium tetraborate, boric acid, and boric oxide.

By-products produced along with boron compounds include sodium sulfate, potassium, lithium, and bromine.

8.4 PROCESS DESCRIPTION

Figure 8.1 illustrates the process steps in production of boron compounds. Processing of brines is not considered in this report. In the production of borox, boric acid, and boric oxide, the emission potential varies widely from plant to plant. Reference 5 gives a range of particulate emissions from 0.1 to 20 grams per kilogram (0.2 to 40 lb/ton) of product.

8.4.1 Mining

(1*) Borates are mined by the open-pit method. A typical analysis of California borate ore is presented in Table 8.2.

Table 8.2 *ANALYSIS OF BORATE ORE FROM KRAMER DISTRICT (CALIFORNIA)*

Component	Ulexite, %	Kramerite*, %	Borax, containing 32% H_2O, %
CaO	13.85	15.11	-
Na_2O	7.65	8.65	21.40
B_2O_3	42.95	49.30	47.26
H_2O	35.45	25.52	31.01
Insoluble	0.10	1.74	0.25
SiO_2	-	0.57	-
Al_2O_3	-	0.42	-

* "Kramerite" formula is same as ulexite, except it contains five water molecules.

The mining operation is a source of atmospheric emissions in the form of particles of the same composition as the ore being mined. The range of particle size is 0.5 to 20 microns. Emissions amount to about 0.5 gram per kilogram (1 lb/ton) of ore mined.[5] The ore is extracted by use of explosives and electric shovels and is removed from the pit by belt conveyors and trucks.

8.4.2 Beneficiation

The ore is beneficiated to concentrate the borate component. Several steps are involved in the concentration process.

* Numbers refer to corresponding processes in Figure 8.1.

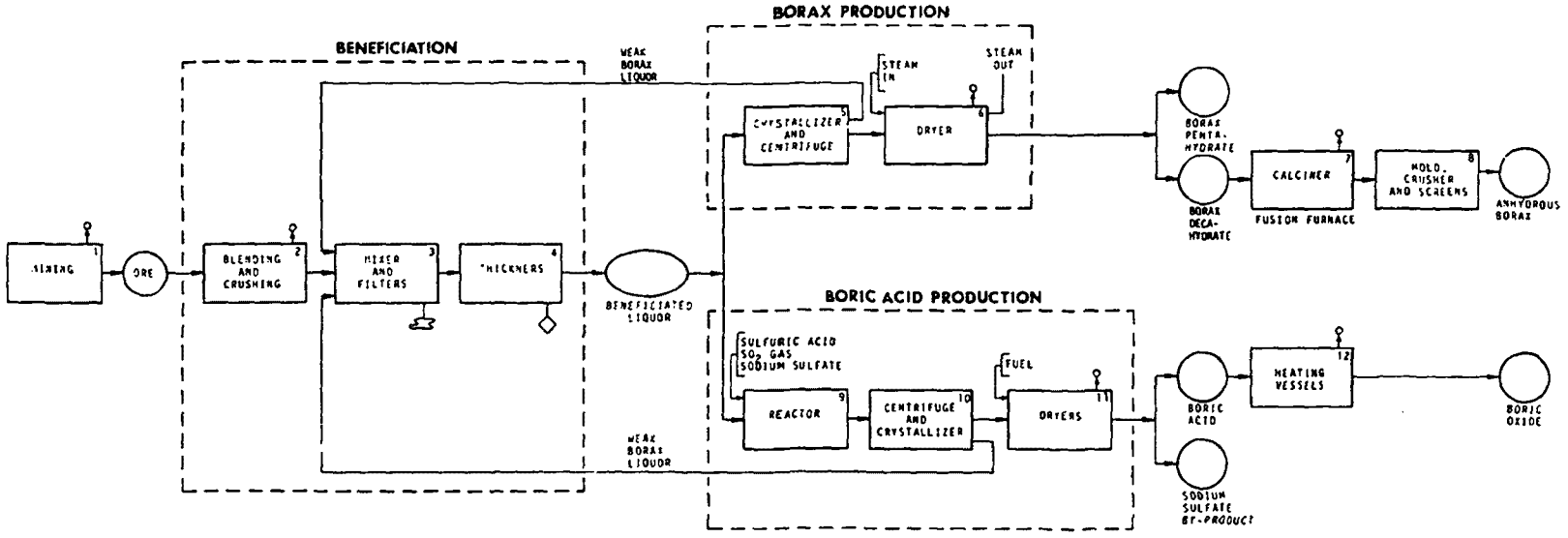

Figure 8.1 Boron industry

(2) Blending and Crushing - The lumps of ore are crushed to a size that is easy to process and gives a good yield of borates. The ore is also blended to give a fairly consistent borate content in the feed.

Crushing causes some emission of particulates to the atmosphere. Composition of the particles is similar to that of the borate ore.

(3) Mixing and Filtration - The crushed ore is mixed with a weak borax solution or mother liquor returning from the crystallizers and centrifuges and then heated and agitated to dissolve the borates. The solution is kept near boiling temperature to dissolve the maximum amount of borax. Insoluble rocks, clays, and other materials are separated by means of screens, sedimentation, and/or filtration. The residual muddy solution contains fine gangue materials.

The screened material is dumped on the tailings pile and may present potential problems of fugitive dust and solid waste disposal.

(4) Thickeners - The muddy solution is run through a series of thickeners and filters to remove the remaining impurities. The temperature of the solution is maintained at 93°C to ensure maximum recovery of the borax.

Again the impurities are dumped on the tailings pile as solid waste.

8.4.3 Borax Production

Concentrated liquor from the beneficiation process may be treated in several ways depending upon the product desired.

Production of borax pentahydrate and borax decahydrate entails the following processes.

(5) Crystallizer and Centrifuge - As the hot solution is cooled in the crystallizer, borax crystals grow and settle to the bottom. Excess water is evaporated by applying a vacuum. The crystals are separated from the remaining solution in the centrifuge. This solution is recirculated to the mixer (Process 3 in Figure 8.1).

The only emission from this process is water vapor.

(6) Dryer - Borax crystals from the centrifuge are moist. The moisture is removed by passing the crystals through a steam-heated dryer. The product from the dryer is refined borax in the form of borax pentahydrate and borax decahydrate.

Emissions from the dryer include borax particulates and water vapor. The particulates amount to about 14 grams per kilogram (28 lb/ton) of borax processed.[5] Borax is moderately toxic.

8.4.4 Anhydrous Borax Production

Borax decahydrate may be further processed to obtain anhydrous borax.

(7) Calciner and Fusion Furnace - The dry borax decahydrate or wet borax decahydrate from the centrifuge is partially dehydrated in the calciner. The effluent gases are usually treated in a cyclone followed by a wet scrubber. Dust collected in the cyclone is added to the calciner discharge, and water from the scrubber is recycled through the borax refining process. The calcined borax next enters a fusion

furnace, where it becomes molten. The furnace is usually gas-fired.

Although the calciner generates dust, emissions to the atmosphere are controlled by the cyclone and wet scrubber.

Slag formed in the calciner is discarded to the tailings pile.

Combustion products from the furnace are the only significant emissions.

(8) Molding, Crushing and Screening - The molten anhydrous borax is subjected to a number of finishing operations depending upon the desired physical characteristics. If the crystalline form is desired, the molten borax is cooled in molds, then crushed and screened to the desired size. If the amorphous form is desired, the molten anhydrous borax is run between water-cooled rolls, then crushed and screened to the desired size.

In both cases, the crushing and screening process creates particulate emissions. The particles are essentially pure borax, which is considered moderately toxic.

8.4.5 Boric Acid Production

Boric acid is manufactured from the concentrated borax solution. The processes are described below.

(9) Reactor - The concentrated borax solution is charged into a reaction vessel along with sulfuric acid, sulfur dioxide, and sodium sulfate. The subsequent reaction produces a combination of boric acid in solution and sodium sulfate crystals.

The temperature is kept at 100°C to hold the boric acid in solution. The process has no known pollution potential.

(10) Centrifuge, Crystallizer - The solution from the reactor is centrifuged to collect the sodium sulfate crystals. The remaining solution is cooled to 40°C to precipitate most of the boric acid. The boric acid is recovered in a centrifuge, and the excess solution is recycled to the mixer (Process 3 in Figure 8.1).

This process has no known pollution potential.

(11) Dryers - The wet boric acid crystals and the sodium sulfate by-product are dried in separate dryers. Some boric acid and sodium sulfate are emitted as particulate from these dryers but emission rate data are not available.

8.4.6 Boric Oxide Production[5]

(12) Heating Vessels - Boric oxide may be produced by heating boric acid. One method entails heating finely ground boric acid slowly to 260°C in a vacuum and holding for 6 hours. A second method involves heating boric acid in a loosely covered container for several days.

Both processes emit small amounts of boric oxide, which is moderately toxic.

8.5 MAJOR POLLUTANT SOURCES

The pollution problems caused by the entire boron mineral industry are minor in comparison to other non-metallic processing industries. The emission potential from borax, boric acid and boric oxide producing plants, varies

from plant to plant. Tailing materials from filter and thickener operations in the industry are potential solid waste problems. The dryers, calciners, and fusion furnaces emit particulate which can be classified as moderately toxic.

REFERENCES FOR CHAPTER 8

1. Wang, K.P. Boron. In: Minerals Yearbook, U.S. Bureau of Mines. 1971.

2. MacMillan, R.T. Boron. In: Mineral Facts and Problems. Bureau of Mines Bulletin 650. U.S. Department of the Interior, Washington, D.C. 1970.

3. Kirk-Othmer, Encyclopedia of Chemical Technology. John Wiley and Sons, Inc, Second Edition, New York, 1967.

4. Smith, N.C. Borax and Borates. In: Industrial Minerals and Rocks. The American Institute of Mining, Metallurgical and Petroleum Engineers. New York. 1960.

5. Davis, W.E. National Inventory of Sources and Emissions. Barium, Boron, Copper, Selenium and Zinc. Section II. Boron. May 1972.

6. Shreve, R.N. Chemical Process Industries. McGraw-Hill, Inc. New York. 1967.

9.0 MICA INDUSTRY

9.1 INDUSTRY BACKGROUND[1,2,3,4]

Mica, a group of minerals of which muscovite and phlogopite are the most common, is generally classified as sheet mica or scrap mica. Sheet mica (including block, film, and splittings) can be formed into desired shapes for industrial use and is precisely defined by ASTM specification D351-60T; scrap (or flake) mica is any mica that does not meet the standards of sheet mica. Most scrap mica is made into ground mica. Recently synthetic micas, the most common of which is fluorophlogopite, have become commercially available at relatively low cost and in high purity. Raw materials for synthesis of these compounds are abundant, and they can be produced in any desired quantity at ambient pressures. These compounds can be treated by isomorphic substitution to create varieties with unusual properties, and usage of the synthetic micas is expected to increase.

Because the process requires much skilled hand labor, very little sheet mica is produced in the U.S. (none in 1970, 7.7 metric tons in 1971). U.S. producers sold or used 115,200 metric tons of scrap and flake mica in 1971. Since most mica deposits average from 5 to 18 percent re-

coverable muscovite, producing this amount requires 0.45 to 2.27 million metric tons of ore.

Over half of the scrap and flake mica produced in 1971 came from North Carolina, most from the Spruce Pine, Franklin-Sylva, and Shelby districts. Another 2 percent came from Connecticut, and the remainder came from Alabama, Arizona, Colorado, Georgia, New Mexico, Pennsylvania, South Carolina, and South Dakota. Producers usually have integrated plants for mining, beneficiation, and grinding scrap mica. Table I-1 in Appendix I, lists producers of mica in the United States.

The sheet mica used in the U.S. comes from India and the Malagasy Republic. In 1971, 640 metric tons of sheet mica were imported into this country, most of it for use by the electrical industry. Since essentially all of the sheet mica used in the U.S. is imported and processed by the ultimate user, this report is concerned primarily with the scrap mica industry.

Mica production in the U.S. has been fairly steady in recent years. Production of sheet mica from 1967 to 1971 has been no higher than 9 metric tons per year. Production of scrap and flake mica during that time ranged from 107,500 metric tons in 1967 to 120,600 metric tons in 1969.

Prior to the 1950's, most mica was processed by washer plants. With the development of a process using a Humphrey's spiral, mica recovery rates increased from approximately 50 percent to 80 percent. In more recent years the Bureau of

Mines has developed a flotation process, which has been proven in the laboratory but is not yet used on a large scale.

9.2 RAW MATERIALS

Although a small amount of scrap mica is obtained as the by-product of mining, trimming, and fabricating sheet mica, the raw material for either washer plants or Humphrey's spirals is mica ore. Mica is commonly found in many metamorphic and igneous rocks and in quartz, feldspar, pyrite, carbonates, and other minerals. Wherever possible, weathered deposits are selected for mining. Since production of ground mica is an integrated industry from mining through grinding, the location of ore bodies can be presumed to be the same as the location of the grinding mills listed in Table I-2 of Appendix I.

9.3 PRODUCTS

The largest use of dry-ground mica is in production of rolled roofing and asphalt shingles. Wet-ground mica is used largely as a pigment extruder in the production of paint, and also in making wallpaper and rubber goods.

9.4 PROCESS DESCRIPTION[4,5,6]

Figure 9.1 illustrates the processes in the mica industry. The ore is mined and beneficiated. The individual operations are described in the following sections.

9.4.1 Mining

(1*) Dry Mining - Mica mining is an open-pit process. Bulldozers or draglines remove the overburden ahead of the face.

* Numbers refer to corresponding processes in Figure 9.1.

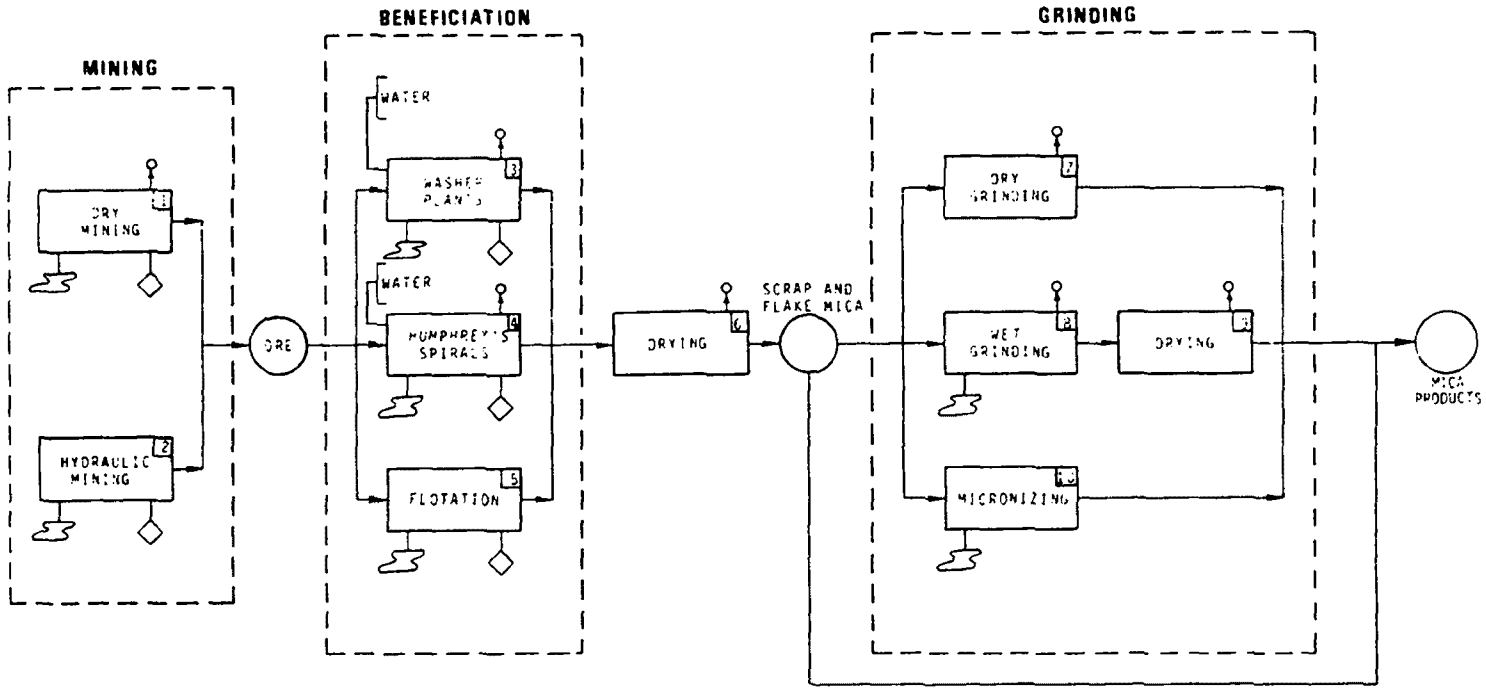

Figure 9.1 Mica industry

Power-driven equipment such as power shovels, drag pans, trucks, and bulldozers then remove the ore from the deposit and transport it to beneficiation plants.

Fugitive dust is the principal pollutant discharged from this type of mining. The dust contains, among other minerals, mica (with a TLV of 706 particles per cubic centimeter) and quartz (with a TLV of $\frac{10.6}{\% \text{ quartz} + 10}$ million particles per cubic meter).

Strip mining can increase soil erosion and lead to high concentrations of particulates in run-off water. Removal of large amounts of overburden and the subsequent disruption of large areas of land are potential solid waste problems.

Since mica is usually mined near processing plants, transportation problems are minimal. If the ore is trucked, however, the trucking operation can cause additional fugitive dust emissions. Exhaust emissions from dieselized mining and hauling equipment, and noise from the blasting, mining and transport of the ore may also create significant environmental impact.

(2) Hydraulic Mining - In the hydraulic process water is directed under pressure against the face. The ore is broken up by the force of the water, washed from the face into a sump, and then flumed or pumped to the processing plant. Hydraulic mining offers the advantages of low investment and operating costs. The principal limitation is that the ambient temperature cannot be below the freezing point of water.

Wet mining entails few fugitive dust problems but can generate high solids concentration in the run-off water. Solid waste problems are similar to those encountered in dry mining operations.

In an efficient hydraulic mining operation the processing plant must be close to the mine to permit convenient transportation of the ore slurry. This eliminates fugitive dust and other emissions generated in transportation. Because the ore deposit must be large enough to supply the beneficiation plant for at least 2 years, most mica ore is mined by the dry method. Some mines combine the two methods.

9.4.2 Beneficiation

(3) Washer Plant - Mica ore is upgraded to a 95 to 98 percent mica content by washer plants, which depend on differential crushing and screening to separate the mica from the gangue. Mica, being more flexible than quartz, pyrite, feldspar, carbonates, and other minerals with which it is found, forms flat plates in a crusher where other minerals are pulverized. The mica remains long enough to be caught on the trommel screens, but the unwanted material passes through and is discarded. This process requires large amounts of water and recovers only about 50 percent of the mica from the ore. Operation is at ambient conditions.

The dust emitted into the air from the crushing operation is similar to that created in mining.

Water may be contaminated by particulates from the gangue. For several years mineral wastes from the Spruce Pine district in western North Carolina were allowed to flow into the power plant reservoir at Greenville, Tennessee. These mineral wastes, along with normal products of erosion and organic matter, filled the reservoir to a point where storage of flood water was no longer significant and power generation was of marginal value.

Approximately 90 percent of the ore processed by this method is discarded; disposal of this material can create serious problems.

A small amount of scrap and flake mica is shipped to companies for use in making mica paper or built-up mica, generally for electrical insulators. Most scrap and flake mica is used to produce ground mica. Grinding is performed at the beneficiation plant, so transportation is not required.

(4) Humphrey's Spirals - Humphrey's spirals recover approximately 80 percent of the mica from the ore. In this method of concentration, the ore is ground and then sent through the spiral where the mica is washed away from the gangue by differences in specific gravity. This process also requires large amounts of water.

Emissions from a Humphrey's spiral beneficiation plant are similar to those from a washer plant except that a deflocculating agent used in the process constitutes an

additional water contaminant. Operating conditions and energy requirements for pumping, crushing, and drying are similar to those for a washer plant.

(5) Flotation - The Bureau of Mines has recently developed a flotation method to concentrate mica, but the method is not yet economically feasible. A small amount of mica is obtained, however, as a by-product of flotation of feldspar ore.

The amounts of energy required for concentration by flotation are not significantly different from those for other beneficiation methods. Chemicals used in flotation, however, could increase waste water contaminants including inorganic salts, fatty acids, amines, excess heat, and alkalinity.

(6) Drying - The final beneficiation process is drying. Even if the mica is to go to a wet-grinding operation, it is dried to remove the quartz which tends to cling to wet mica. Drying requires large amounts of heat; air contaminants include hydrocarbons, sulfur oxides, and other pollutants that depend on the source of heat for the dryers.

9.4.3 Grinding

(7) Dry Grinding - Dry grinding of scrap and flake mica is done with buhr mills, rod mills, high-speed hammer mills, cage disintegrators, or attrition mills. Dry, screened mica is fed into the mill, where it is crushed and discharged into an air separator, which returns the oversize particles for

additional crushing. Various sized fractions are bagged for marketing.

Particulate emissions from the grinding and bagging activities are probable sources of atmospheric pollution.

(8) Wet Grinding - Done with a mica-on-wood grinding action and enough water to preserve a paste consistency, wet grinding is usually performed in chaser mills. Water is separated from the final product by settling, pressing, or centrifuging.

Water discharged from these plants may contain suspended solids and heat.

(9) Drying - After wet-ground mica is drained or pressed to remove most of the water, it is put in steam-heated kettles or rotary dryers, heated to drive off traces of water, then sized and bagged for marketing. As in other drying processes, gaseous pollutants result from heating, the most probable emissions being hydrocarbons and sulfur oxides. Particulates may be emitted from the bagging step but are usually well controlled.

(10) Micronizing - Superheated steam from high-pressure jets breaks the mica into fine fragments, yielding mica particles in the 5 to 20 micron size range. Production of the steam requires large amounts of energy. The process occurs at ambient pressure.

Water pollutants may be discharged with condensate; fugitive dust and solid waste problems seem unlikely.

After grinding, the product is bagged and shipped to the consumer.

9.5 MAJOR POLLUTANT SOURCES

Since very little mica is mined in the U.S., environmental problems do not arise from large amounts of solid waste generated from the mining of mica. Disposal of rejected fine mica and other waste rock generated by beneficiation of the host rock is an environmental problem.

REFERENCES FOR CHAPTER 9

1) Petkof, Benjamin. Mica. In: Minerals Year Book, Volume 1. Bureau of Mines. 1971.

2) Readling, Charles L. Mica. In: Minerals Year Book, Volume I-II. Bureau of Mines. 1969.

3) Petkof, Benjamin. Mica. In: Minerals Year Book, Volume I-II. Bureau of Mines. 1967.

4) Lesure, Frank G. Mica. In: United States Mineral Resources. Geological Survey Professional Paper 820. U.S. Department of the Interior.

5) Kirk-Othmer. Encyclopedia of Chemical Technology. Wiley and Sons, Inc., New York. 1967.

6) Industrial Minerals and Rocks. Seeley W. Mudd Series. American Institute of Mining, Metallurgical, and Petroleum Engineers. New York. 1960.

10.0 FLUORSPAR

10.1 INDUSTRY BACKGROUND[1,2]

In the United States, fluorspar is used as a flux in open-hearth steel furnaces; in aluminum refining; in the smelting of copper, silver, gold, and lead; and in the manufacture of hydrofluoric acid. Fluorspar is natural calcium fluoride (CaF_2), occurring as a gangue associated with metallic ores such as lead, zinc, and silver, and with quartz, calcite, dolomite, or barite.

The steel industry is the major consumer of fluorspar in the U.S., consuming 43 percent of total U.S. production in 1971. The chemical industry consumed another 37 percent, mainly in the manufacture of hydrofluoric acid (HF). The aluminum industry accounted for 15 percent, and the remaining 5 percent went to other uses. New uses are being discovered constantly; these include applications in medicine, in propulsion motors for a nonpolluting automobile, in fluorocarbon paint to resist fires, in new polymerization catalysts, in electrochemical cells, and in new fluorinating agents.

In 1971, 246,800 metric tons of fluorspar were mined and processed in the United States. This represents 5

percent of the world's output. In 1971, the U.S. consumed 1,220,000 metric tons, or 26 percent of the world's output. Of the 972,900 metric tons imported into the U.S., Mexico supplied 79 percent.

Illinois mines are the major producers of fluorspar in the U.S., accounting for 51 percent of the U.S. shipments in 1971. Other states producing fluorspar are Colorado, Montana, Nevada, New Mexico, Idaho, Utah, Arizona, and Kentucky. Twenty-eight mines are in operation, controlled by 22 companies. Table J-1 in Appendix J lists the principal producing mines.

Based on the present ratio of domestic production to demand, the currently known U.S. resources of fluorspar will be depleted in 20 to 25 years. It is believed, however, that as known reserves are depleted, advancing technology will allow better exploration and more efficient recovery of fluorspar deposits, but at proportionate price increases. This trend is evident now, as today's rising prices encourage many companies to spend considerable amounts of money and time in exploration for new deposits.

10.2 RAW MATERIALS

Fluorspar is weakly radioactive and is a moderately hard, glassy mineral occurring in a variety of colors.

Fluorspar ore is the only material needed for production of the principal grades of fluorspar. The ore from different states is described below.

Illinois-Kentucky[3] - One of the most important fluorspar deposits in the world occurs in the southeastern part of Illinois and western Kentucky. The Illinois portion lies in Hardin and Pope counties; the Kentucky segment lies in six counties, the principal producing areas being in Crittenden and Livingston counties. Fluorspar occurs as veins with thickness ranging from a film to more than 9.14 meters. Although chiefly associated with limestone and sandstone, it is sometimes associated with galena, sphalerite, calcite, and barite.

Colorado[4] - The mineral occurs in beds or veins in granite or volcanic rocks, which are highly acidic with high silica and low calcium content.

The fluorspar deposits are found mainly in a belt roughly paralleling the eastern side of the Front Range. Several productive areas also occur in the southern and southwestern parts of the state, and a few deposits of no economic significance are scattered throughout the mountains.

New Mexico[5] - The known fluorspar deposits are in the mountain regions. The deposits occur in fissures and fault breccia, and in cavities of less fractured rock. Most deposits occur in groups of veins or masses, but a few do occur singly. The deposits may contain one or more ore bodies, which commonly constitute only a small part of the entire deposit.

Nevada - The deposits are in the Spor mountain region and occur in sedimentary rock.

Idaho[6] - The deposits are in Lenhi County. They range in size from isolated veinlets to large ore bodies as much as several hundred feet long and up to 20 feet wide. The fluorspar is usually associated with calcite and barite.

Utah[7] - Deposits occur in Beaver, Jaub, and Joole counties. The ore is found chiefly in veins and faults. Most deposits are epithermal, formed by the filling of fault fissures and interstices in fault breccia. The Jaub county deposits have an abnormally high uranium content.

Montana - The ore occurs in granite. Fluorspar associated with metalliferous deposits also has been found in some localities.

Arizona - Fluorspar is a common gangue mineral in veins, but very few deposits have yielded fluorspar on a commercial basis.

Table 10.1 presents an analysis of 18 fluorspar ores from various mines. Table 10.2 gives a spectrographic analysis of several additional fluorspar ores.

10.3 PRODUCTS

Three grades of fluorspar are produced: metallurgical grades contain 60, 70, and 72.5 percent effective calcium fluoride (CaF_2); ceramic grades range from 85 to 96 percent CaF_2; and acid grades contain greater than 97 percent CaF_2.

The main by-products of the fluorspar industry are zinc and lead. Small quantities of silver, cadmium, germanium, and stone are also produced.

Table 10.1 ANALYSIS OF FLUORSPAR

Composition	1	2	3	4	5	6	7	8	9	10	11	12	13	14	15	16	17	18
CaF_2	36.7	63.6	2.39	78.97	34.12	72.73	21.43	13.40	4.29	2.38	45.76	73.94	54.21	47.26	39.87	55.39	18.10	59.54
SiO_2	24.9	-	-	15.29	22.70	27.72	25.86	68.20	35.32	42.70	8.90	7.0	17.74	26.8	1.68	21.98	9.59	38.67
Fe_2O_3 & Al_2O_3	2.5	-	-	4.19	16.21	8.14	22.51	12.34	18.50			-					0.80	-
$CaCO_3$	32.5	-	-	1.13	26.47	11.41	30.20	6.06	41.89			-	26.12	-	54.42	20.81	0.50	0.57
$BaSO_4$				-	-	-							-	-	-	0.12	1.58	1.79
Zn	0.01				2.17	1.75	1.26		0.77	18.00	2.31							
Pb						0.22				5.01	0.53							
Ag												1.1	-	2.1	Trace	0.10		
Au												0.02	-	0.005	Trace	Trace		

1,2,3,4: Knox & Yingling fluorite mines, Hardin Co., Ill. (at different depths of different holes).
5,6,7,8,9: Ridge clay Lickfault, Livingston Co., Kentucky (at different level at the same deposit).
10,11: Columbia mine, Kentucky (at different locations).
12,13,14,15,16: Fluorspar from Montana.
17: Meyers Cove, Lemhi County, Idaho.
18: Blackbird Mine, New Mexico.

Table 10.2 SPECTROGRAPHIC ANALYSIS OF FLUORITE FROM ILLINOIS AND KENTUCKY [8]

(parts per million)

Sample Location	Type of Analysis	As	Mn	Ti	Ba	Na	Fe	Cu	Sr	Y
Oxford Mine, Ill.										
Early yellow	SQ	nd	nd	nd	20	nd	nd	nd	300	70
Oxford Mine, Ill.										
Early colorless	SQ	nd	nd	nd	nd	nd	nd	nd	0.0050	0.2002
Rose Mine, Hicksdome, Ill.										
Colorless	Q					0.0370	0.01	0.0002	0.0034	0.004
Green	Q					0.0280	0.006	0.0002	0.0037	0.004
Oxford Mine, Ill.										
Blue	Q					0.0310	0.0002	0.0002	0.0026	<0.02
Deardorf Mine, Ill.										
Early purple	SQ	nd	nd	nd	7		nd	nd	0.005	0.002
Late purple	SQ	nd	nd	nd	7		nd	4	0.007	0.002
Lone Oak, Mercer Co.,										
Early colorless	SQ	nd	nd	10	50		0.0030	0.0001	0.05	0.0015
Late purple	SQ	nd	0.0002	0.02			0.0150	0.0015	1.5	0.0015
Volga, Clayton Co., Iowa										
Colorless		nd	0.0007	nd	nd	nd	nd	nd	0.007	nd

SQ: Semi-quantitative, Q: Quantitative, nd: below the limit of detection.

10.4 PROCESS DESCRIPTION

Figure 10.1 illustrates the steps involved in producing fluorspar. The ores are mined, beneficiated, and agglomerated to meet specifications depending upon the ultimate use. The individual processes and their emission potentials are described in the following sections.

10.4.1 Mining[9]

(1*) Mining is done by metal-mining practices, usually by top-slicing, cut-and-fill, and shrinkage and open stopping. Bedded deposits are usually worked by the room-and-pillar system. Mining is done by shafts, drifts, and open cuts. Mines range in size from small operations with mostly hand-operated equipment to large operations extensively mechanized with diesel-powered hauling and loading equipment.

Fugitive dust emitted in mining has essentially the same composition as the ore being mined.

Water from subsurface mining operations usually is polluted with finely crushed rock as well as some oil, hydraulic fluid, gasoline, and other materials commonly used in the underground operations.

10.4.2 Beneficiation[9,10,11]

Fluorspar ore, as mined, is generally intermixed with other rocks and clays, which must be removed before commercial distribution. The amount of refining depends upon properties of the ore and the grade of fluorspar desired. Following are descriptions of the typical processes involved.

* Numbers refer to corresponding processes in Figure 10.1.

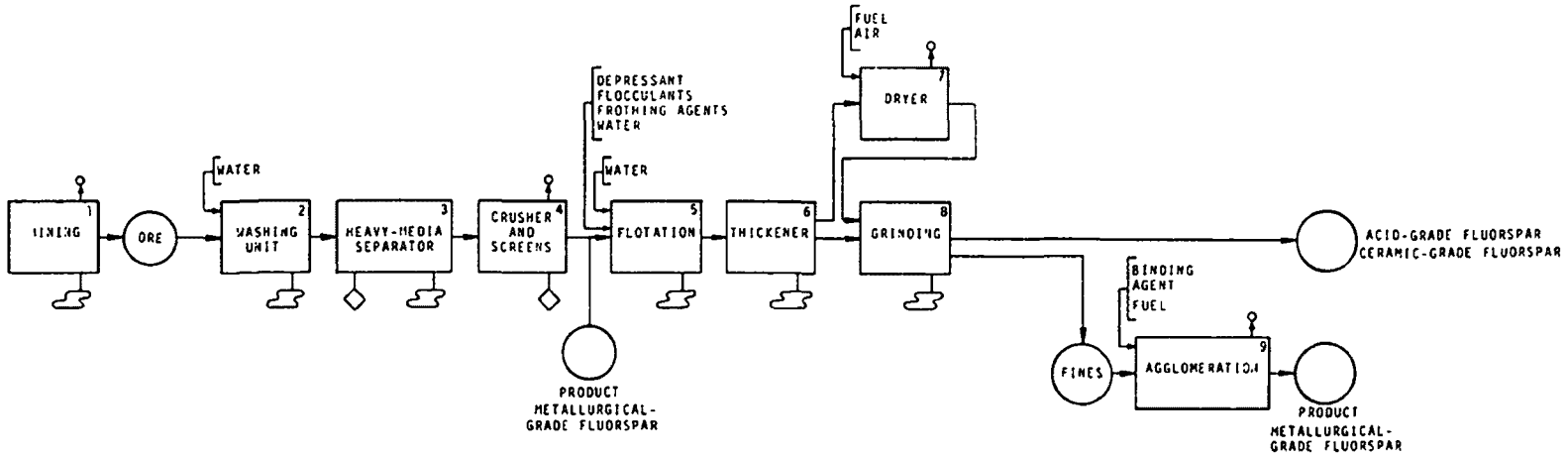

Figure 10.1 Fluorspar industry

(2) Washing - A log washer or trommel screen removes any clays associated with the ore. The raw ore is subjected to water sprays as it travels up the log pulper, washing away the clay and leaving the heavier rock. The rock is usually screened to remove the larger lumps.

The liquid effluent from the washing operation contains a heavy concentration of suspended solids and may also contain a small quantity of dissolved salts.

Oversized material from screening is usually crushed or deposited on a tailings pile by belt conveyors and/or a bulldozer. Tailings are a solid waste problem.

(3) Heavy Media Separation - The ore minerals are separated from waste in a cone containing a suspension of finely ground ferrosilicon. The ratio of ferrosilicon to water is adjusted to give the suspension a specific gravity of 2.55 to 2.62 at the top of the cone, and 2.85 to 3.1 at the bottom. Crude ore is introduced at the top of the cone. Heavy minerals, such as fluorspar and metal sulfides, sink and are recovered at the bottom of the cone. Light minerals float and are carried away with the overflow. Ferrosilicon is recovered magnetically and returned to the process.

The overflow water, containing light minerals, is a possible pollution problem.

(4) Crushing and Screening - The ore is fed through a crushing system for reduction to the desired fineness. Metallurgical grades require sizes between 0.95 centimeter and 3.8 centimeters. If the raw fluorspar ore is of metallurgical

grade, it is crushed and screened to the proper size with no previous refinement. To produce acid and ceramic grade fluorspar the crushed and sized ore is fed to a ball mill in conjunction with a cross-flow or spiral classifier. This operation reduces the size to between 35 and 200 mesh. The resultant "pulp" is maintained at greater than 60 percent solids.

Virtually no air pollution results from the crushing and screening operation if the ore is wet. Particulate is evolved if the ore is dry, which may occur in production of metallurgical-grade fluorspar. The particles emitted are of the same composition as the raw ore (Tables 10.1 and 10.2). For dry crushing and screening the particulate emission is approximately 1 gram per kilogram (2 lb/ton) of ore processed.

Water pollution is created in the form of suspended solids in the classifier overflow. The concentration is usually between 15 and 17 percent solids. A typical size analysis of the suspended solids is given in Table 10.3.

Table 10.3 REPRESENTATIVE SCREEN ANALYSIS OF CLASSIFIER OVERFLOW[10]

Screen Size, Mesh	Pct
On 20	0.09
On 60	0.26
On 100	0.21
On 150	3.17
On 200	13.18
−200	83.08

This process generates no significant solid waste.

(5) Flotation - Further purification is achieved by treating the ore minerals in flotation units by use of agitated water baths to which are added frothing agents and reagents that

selectively coat the minerals. The sequence of reagents and flotation procedures varies according to the composition of the ore and preferences of the mill operator.

Typical reagents are xanthates, acids, or sulfates.

The temperature of the water supplied to flotation cells is usually around 38°C. This temperature is maintained throughout the system by injection of steam at various points.

Tailings from the flotation operation are usually in the form of a pulp containing 11 percent solids; thus they present both water pollution and solid waste disposal problems. The water contains all of the various reagents added to the system along with the ore minerals. These materials are not necessarily toxic, but cause excessive growth of algae and bacteria.

Settling ponds may remove most of the suspended solids, but the organic reagents are still present in the effluent. Fluorine is also present in the waste water in concentrations that exceed those of normal surface waters.

(6) Filter and Dryer - The "pulp" from the flotation cells usually contains between 20 and 40 percent solids. The concentration is increased to about 60 percent solids in a thickener. The moisture is further reduced with a filter. The filter liquid is sent to a disposal area and the cake is further treated.

(7) Dryer - The resulting filter cake may contain as low as 6 percent moisture, and is dried to less than 0.5 percent moisture

in a rotary dryer at a temperature around 260°C. The dryer can be oil- or gas-fired.

Without controls, the dryer can emit particulate with a composition like that of the fluorspar product. A typical analysis of acid-grade fluorspar appears in Table 10.4. The amount of particulate emitted without controls is around 5 to 7.5 grams per kilogram (10 to 15 lb/ton) of concentrate processed, varying considerably according to the fineness of the particles in the concentrate.

Table 10.4 ANALYSIS OF ACID FLUORSPAR CONCENTRATE[10]

Item	Pct
Screen analysis	91.99 (−200 mesh)
Calcium fluoride	97.02
Calcium carbonate	1.85
Silica	0.54
R_2O_3	0.53
Sulphur	0.06

The remaining reagent is also emitted as vapor from the dryer. The amount and composition depend upon the reagents used and the percent moisture in the filter cake.

Overflow from the thickener and the filter may contain the flotation reagents and some dissolved minerals. Again, the fluorine concentration is abnormally high.

No solid waste is generated in this process.

(8) Grinding - After drying, the fluorspar concentrate is ground to minus 325 mesh. Screw conveyors and elevators transport the product to storage bins for subsequent shipment. Enclosed hopper cars are usually used to ship the product.

Particulates emitted in this operation have the composition similar to that of the fluorspar concentrate (Table

10.4). Because the particles are small, the quantity of emissions could be as much as 12.5 grams per kilogram (25 lb/ton) of fluorspar produced.

(9) Agglomeration[8,11] - Many fluorspar flotation plants are now supplemented by pelletizing equipment. This equipment allows the recovery of fine-grained flotation concentrates of metallurgical quality by conversion to strong, weather-proof agglomerates suitable for automatic feeding into steel furnaces.

One type of equipment produces a spherical pellet in a 2.44-meter diameter rotating disc-type pelletizer. Dry feed is mixed with a binder solution of sodium silicate with an undisclosed additive. The "green" pellets are fed into a long Porbeck baking oven and subjected to temperatures of 371 to 399°C for 20 to 30 minutes. The pellets withstand outdoor exposures including freezing and thawing, and show less dusting than natural gravel spar when exposed to thermal shock in the steel furnace.

The main emission source in this operation is the baking oven. Most of the emissions are vapors from the sodium silicate solution. Essentially all of the binder solution is emitted as vapors. A small amount of particulate is exhausted from the oven.

10.5 MAJOR POLLUTANT SOURCES

Fluorspar mining and milling produces no unusual environmental hazards. However, insufficient ventilation at

the Barnett Mine, Illinois on April 12, 1971 caused the death of seven miners due to an accumulation of hydrogen sulfide gas at deep levels of the mine.

REFERENCES FOR CHAPTER 10

1. MacMillan, R.T. Fluorine. In: Mineral Facts and Problems. Bureau of Mines Bulletin No. 650. United States Department of the Interior. Washington, D.C. 1970.

2. Wood, H.B. Fluorspar and Cryolite. In: Minerals Year Book. U.S. Bureau of Mines. 1971.

3. Boston, Edron Sutherland. The Fluorspar Deposits of Hardin and Pope Counties. Illinois State Geological Survey. Bulletin No. 58. 1931.

4. Aurand, H.A. Fluorspar Deposits of Colorado. Colorado Geological Survey. Bulletin No. 18. 1920.

5. Rothrock, H.E. and C.H. Johnson. Fluorspar Resources of New Mexico. New Mexico Bureau of Mines and Minerals Resources. Bulletin No. 21, 1946.

6. Cox, D.C. U.S. Geological Survey. 1015A, 1955.

7. Stoatz, M.H. and F.W. Osterwald. U.S. Geological Survey. B-1069, 1959.

8. Economic Geology. Volume 63, No. 6, Page 655.

9. Kirk-Othmer. Encyclopedia of Chemical Technology. New York. John Wiley & Sons, Inc., 1966.

10. West, L. and R.R. Walden. Milling Kentucky Fluorspar Tailings. Mining Engineering 542-544, May 1954.

11. Maier, F.J. and E. Bellack. Fluorspar for Fluoridation. Journal of the American Water Works Association. January 1957.

12. Lindsay, G.C. Metal Mining and Processing. Volume 2, 26-28, 1965.

11.0 RECOMMENDATIONS

The purpose of this study was to assemble production data for nonmetallic minerals and descriptive data on processes and emissions for selected industries. In previous chapters we have described background of industry, availability of raw materials, products and their composition, processes, and significant emission sources. In this chapter those processes are identified that should be further evaluated because of their potential for emissions of hazardous pollutants or fugitive dust.

These processes are:

- Kilns (Cement Industry)
- Kilns (Lime Industry)
- Phosphate Rock Mining and Washing
- Clay Mining
- Hydrator (Thermal Phosphoric Acid Production)
- Reactor (Wet-Process Phosphoric Acid Production)

KILNS (CEMENT INDUSTRY)

Cement kilns emit (uncontrolled) about 83.5 grams of particulate per kilogram (176 lb/ton) of cement processed. Elements present in the particulate include Be, Cd, Cr, Cu,

Fe, Mn, Ni, Pb, Sb, Sr , and V. Most of the particulate is smaller than 10 microns in size. The effluent gas rate is approximately 5319 grams per kilogram (2000 lb/bbl) of cement at about 760°C. The gas stream also contains alkali sulfates, alkali chlorides, calcium fluoride , and fuel combustion products. Cement plants may also release appreciable amounts of mercury to the atmosphere.

KILNS (LIME INDUSTRY)

Lime kilns emit approximately 90 grams of particulate per kilogram (180 lb/ton) of lime. The particulate contains raw limestone, calcined lime dust, fly ash, tar, and unburned carbon. Thirty percent of the emitted particulate is below 5 microns in diameter and 10 percent is below 2 microns. The gaseous effluent is usually between 427 and 982°C and contains sulfur dioxide and sulfur trioxide if fuel oil or coal are used.

PHOSPHATE ROCK MINING AND WASHING

In preparation of Florida pebble phosphate, approximately one ton of slime is produced for each ton of phosphate fertilizer produced. This waste, which is mainly phosphate-clay-bearing slimes, contains about 3 to 5 percent of very fine clay. These slimes are impounded by dikes or earth dams in special ponds in which the solid material settles. As of November 1973, some 162 million square meters (40,000 acres) of active and inactive settling areas existed. It is estimated that about 10 million square

meters (2500 acres) of new settling pond areas are established each year.

Earth dams have been known to fail. Recently, on December 3, 1971, 1.8 million metric tons of slime cascaded into the Peace River in Florida when a dam failed. (Since 1942, about 20 dam failures have occurred releasing large amounts of phosphate slimes). Since these slime ponds exist for 10 to 25 years, there is always a potential for water pollution. Table 6.6 presents the composition of slimes.

CLAY MINING

A large number of mines are located in heavily populated areas and cause some environmental problems. A considerable amount of dust is generated which, although it may not create any hazardous effects, does produce nuisance problems. Clay dust problems are very significant in Georgia's urban areas.

Approximately 27.2 million metric tons of waste material are discharged annually from mining kaolin in Georgia, 1.8 million metric tons from mining fuller's earth along the Georgia-Florida border, and 4.54 million metric tons from mining bentonite in Wyoming.

Water pollution is also a problem in mining clay.

HYDRATOR (THERMAL PHOSPHORIC ACID PRODUCTION)

Phosphoric acid mist is discharged at an uncontrolled rate of about 67.5 grams per kilogram (135 lb/ton) of P_2O_5 produced. Many industries control the emissions using

equipment with 99.5 percent efficiency. The acid mist particles in the form of orthophosphoric acid (H_3PO_4) range in size from 0.4 to 2.6 microns. A typical effluent flow rate from the hydrator is about 0.708×10^6 cm^3/sec.

REACTOR (WET-PROCESS PHOSPHORIC ACID PRODUCTION)

The primary air pollutants are rock dust fluorides, carbon dioxide, silicon tetrafluoride, hydrogen fluoride, and phosphoric acid mist. Most modern wet phosphoric acid plants use a scrubber. Emissions from a system of this type are 0.025 to 0.05 gram fluorine per kilogram (0.50 to 0.1 lb/ton) of P_2O_5 produced. Fluoride emissions are toxic.

The next study phase should consist of obtaining detailed information for each of these processes on the emission characteristics and the approximate degree of emissions control. This phase would entail several plant inspections of each process and discussions with appropriate personnel from the industry, their design/process engineers, and emission control equipment manufacturers. Emission source tests may also be required for several processes to obtain necessary data on emission particle size distribution and composition.

A consistent quantitative procedure of ranking these processes should then be used to identify the most significant sources. This procedure should encompass the qualitative factors, listed above, which were used in the initial selection. For example, such a procedure might

include determination of the "area of significant pollution impact;" such an area could be estimated by considering probable distance of significant pollutant transport coupled with probable health impact. Health impact determinations should be based upon consideration of the particle size distribution and particle composition. Such a study should be a cooperative effort with EPA's Health Effects Research Laboratory. Once the "significant impact area" is determined, the population living or working within such areas could be determined and an emissions control priority established for all processes, not only for the significant sources identified by this study but for those identified in parallel studies.

APPENDIX A*

PRODUCTION AND CONSUMPTION STATISTICS

* A table for conversion of English to metric units of measurement is given on Page A-2.

Table A-1 FACTORS FOR CONVERSION OF ENGLISH TO METRIC UNITS

Multiply (English unit)	By	To obtain (Metric unit)
Atmosphere	760.0	millimeter of mercury
BTU (British Thermal Unit)	252.0	gram calorie
Cubic foot	28.32	liter
Foot	30.48	centimeter
Gallon (US)	3.785	liter
Grain	0.065	gram
Horsepower	0.7457	kilowatt
Ounce (avoirdupois)	28.35	gram
Ounce (fluid)	29.57	milliliter
Pound	453.6	gram
Ton (long)	1016	kilogram
Ton (short)	907.0	kilogram
Watt	0.0143	kilo calorie/minute

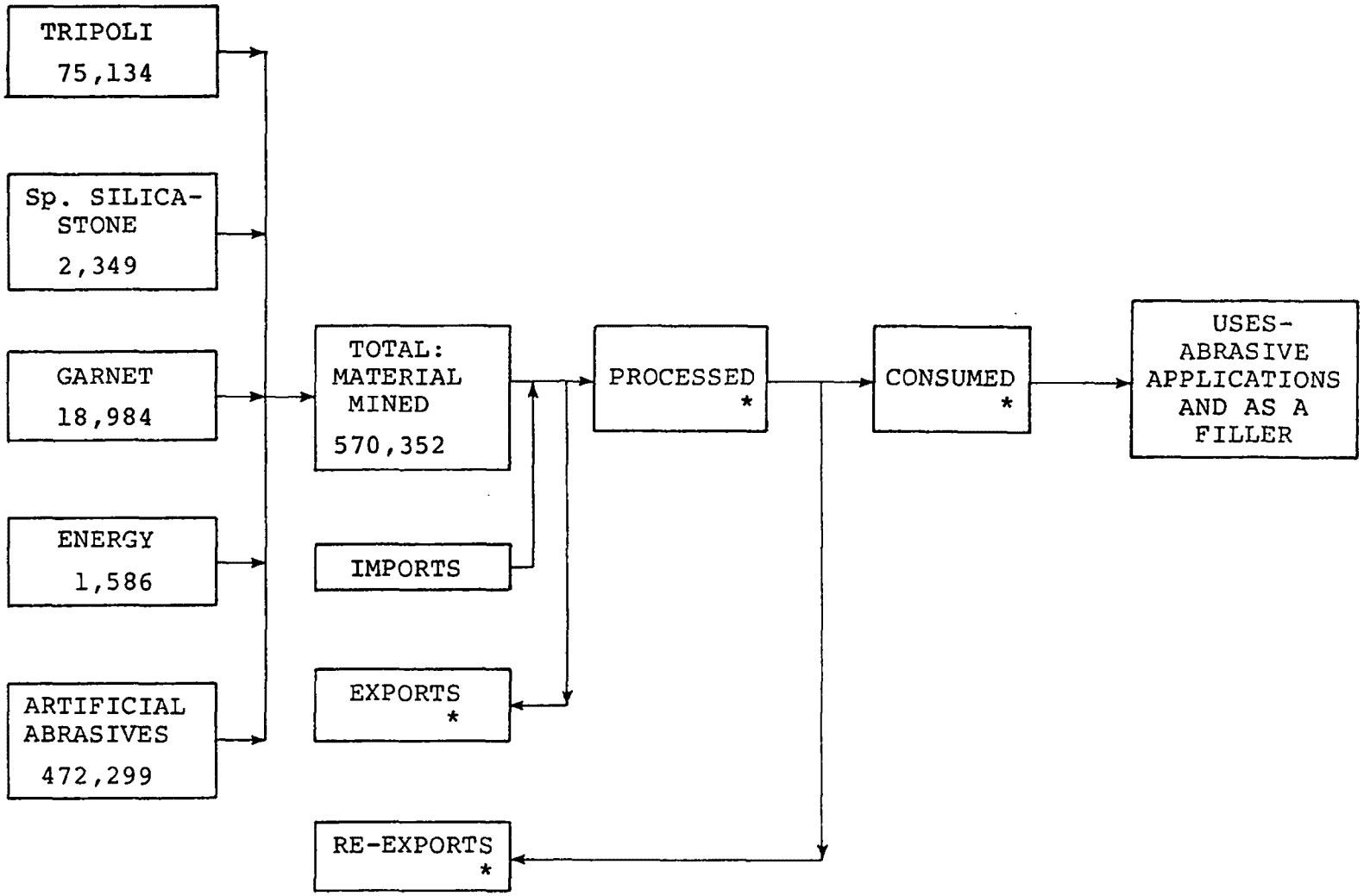

Quantities are expressed in short ton units.

*Data not available.

Figure A-1 Abrasive materials production and consumption statistics (1971).

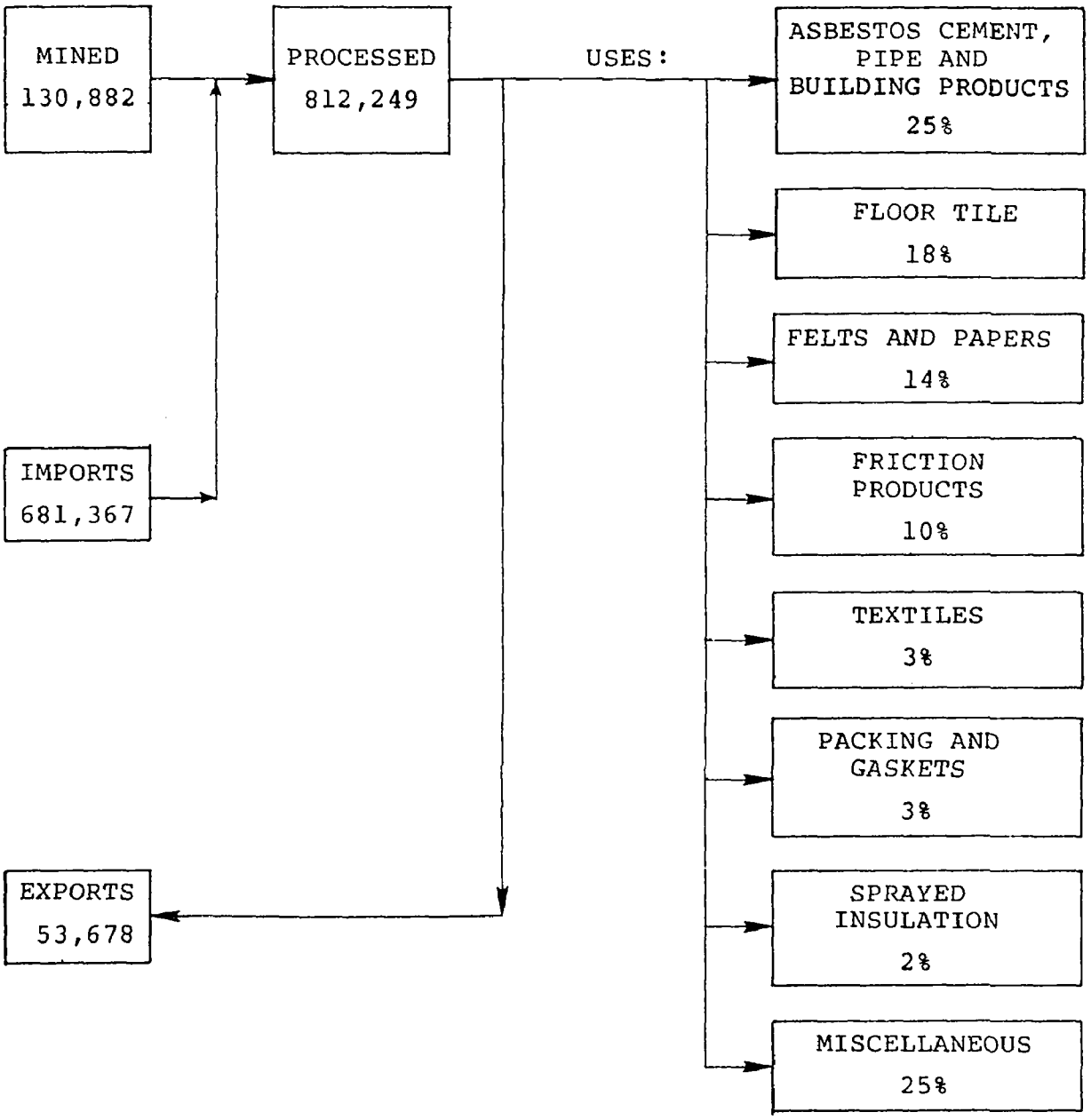

Quantities are expressed in short tons.

Figure A-2 Asbestos production and consumption statistics (1971).

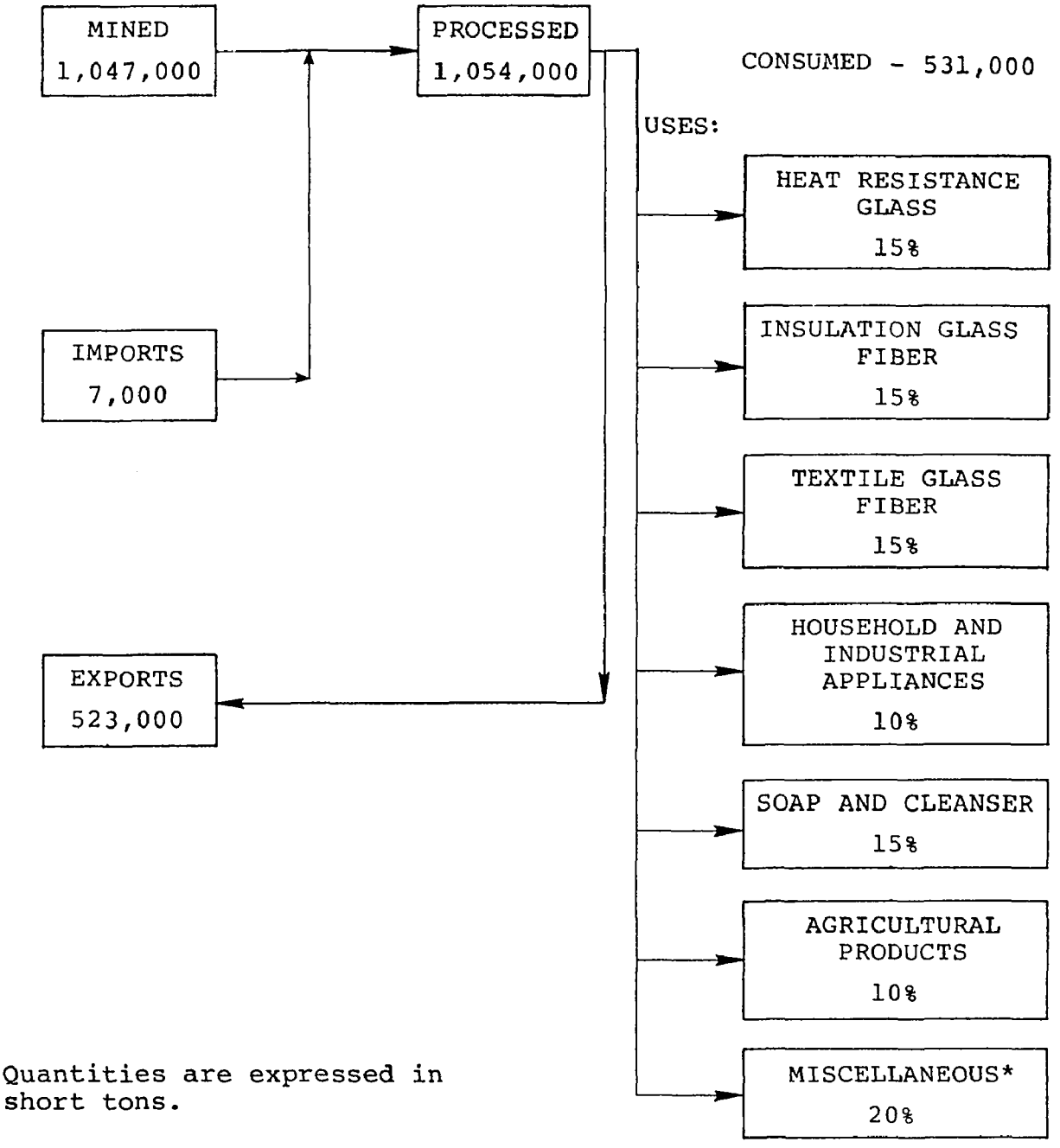

*Abrasion resistance parts, catalyst in silicon production, extinguishing agent for magnesium fires, plasticizers, adhesive additives for latex paint, and dyeing leather textiles.

Figure A-3 Boron production and consumption statistics (1971).

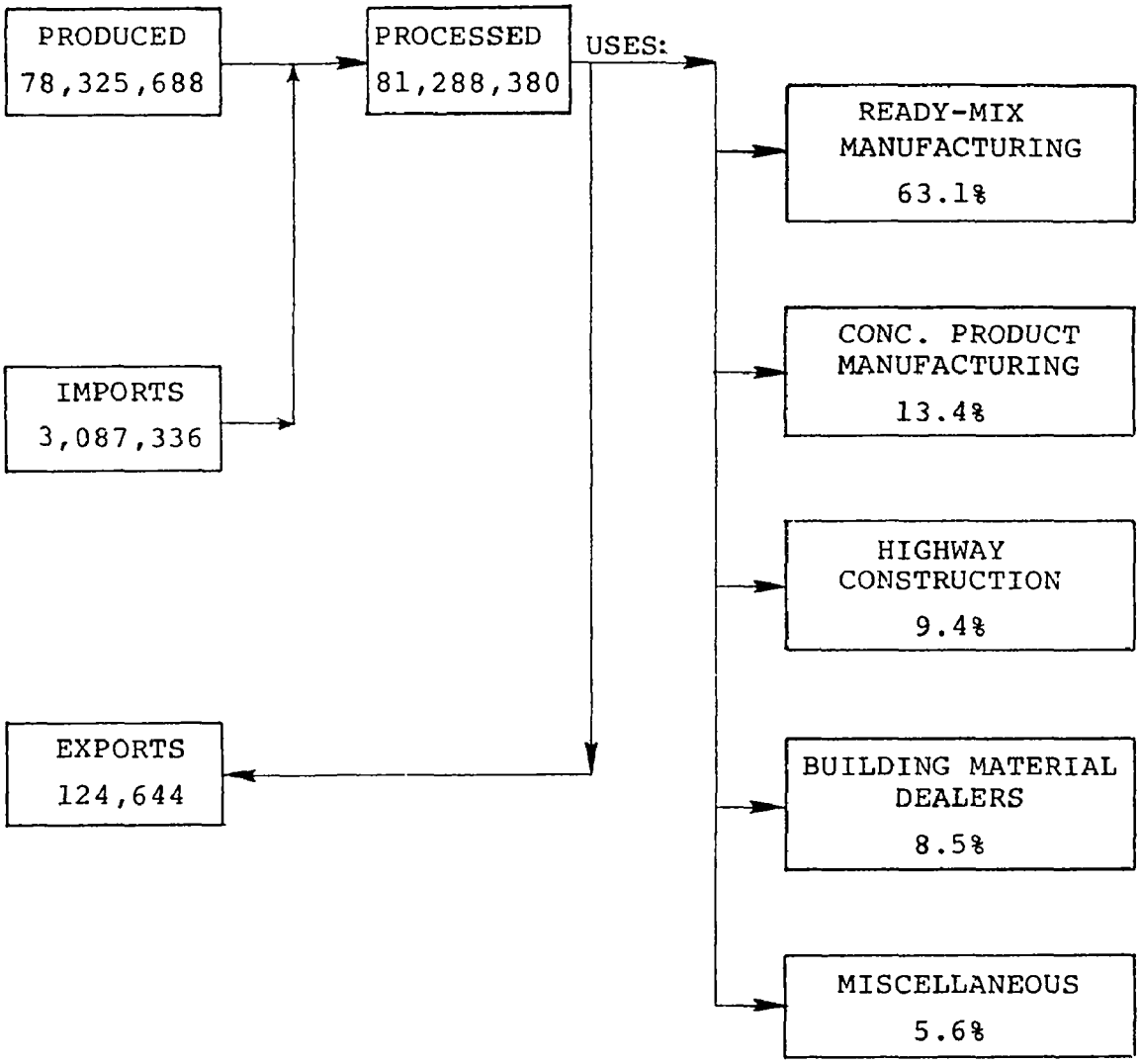

Quantities are expressed in short tons.

Figure A-4 Cement production and consumption statistics (1971).

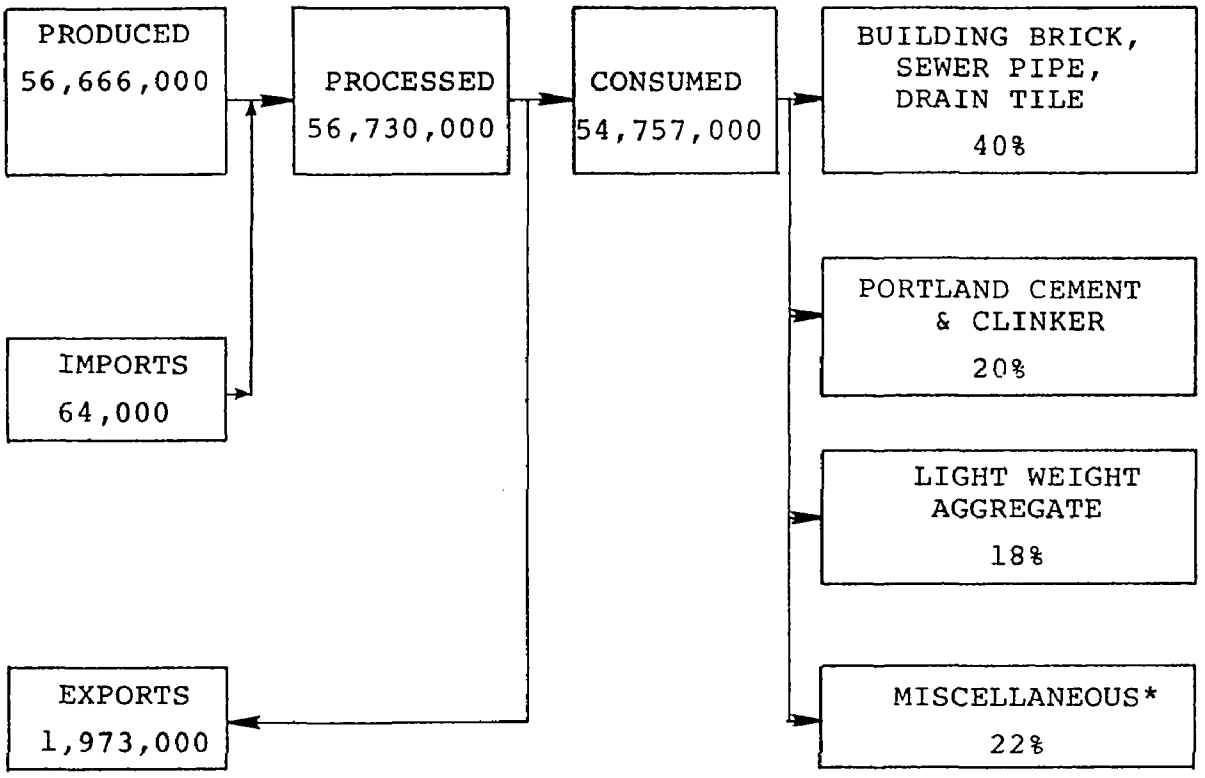

*Miscellaneous uses include:

Absorbent uses	1% of total
Drilling mud	12%
Floor and wall tile	8%
Pelletizing iron ore	-%
Pottery	1%

Quantities are expressed in short tons.

Figure A-5 Clay production and consumption statistics (1971).

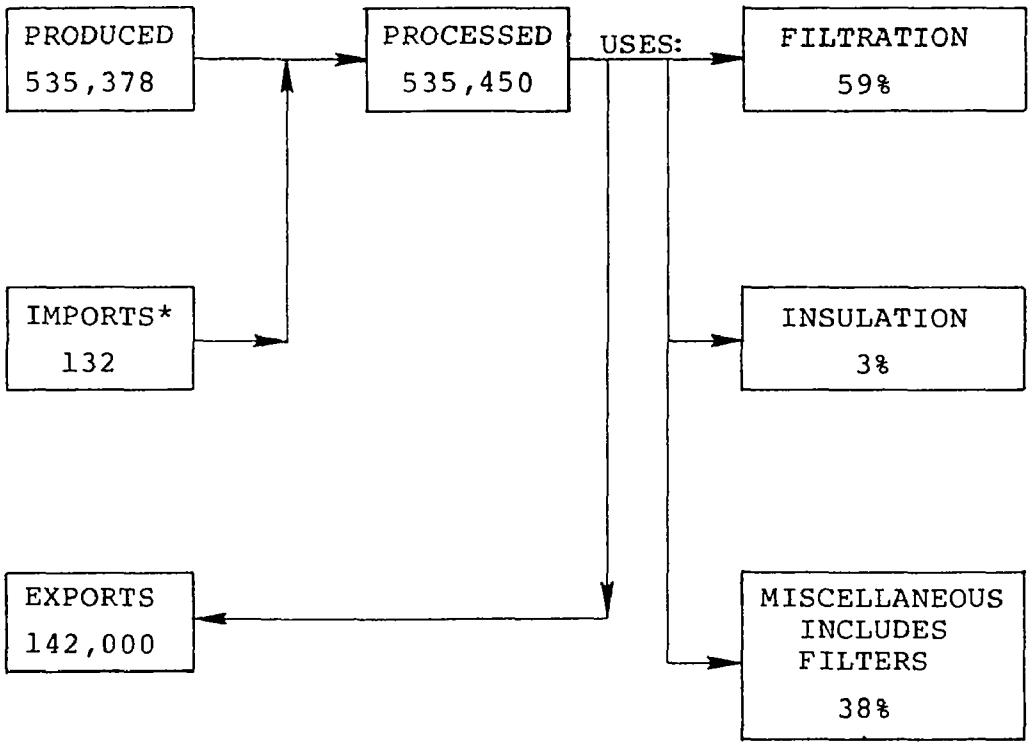

All quantities are expressed in short tons.

*Imports: Same part of it is processed material.

Figure A-6 Diatomite production and consumption statistics (1971).

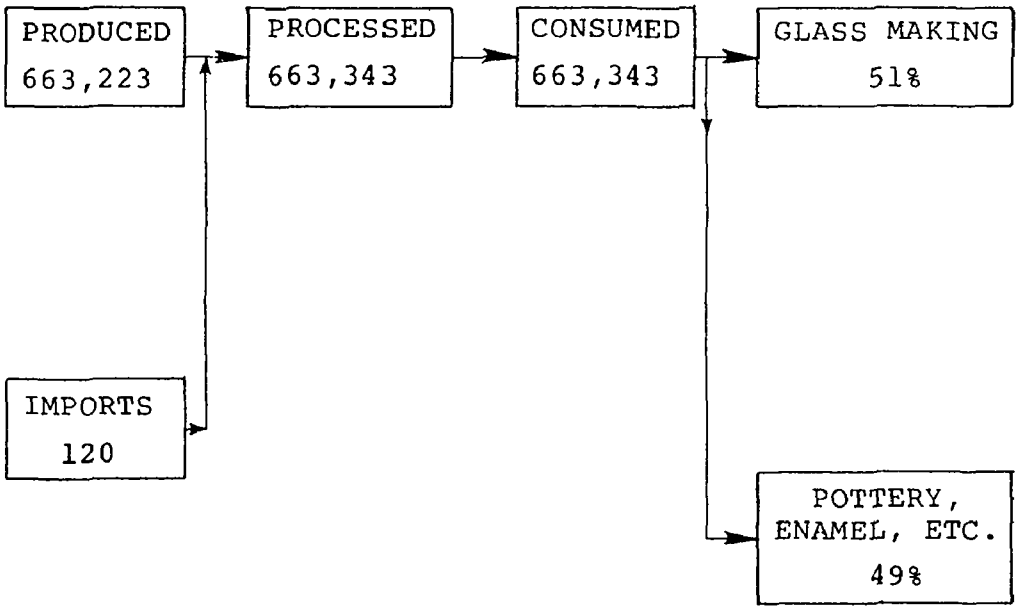

Quantities are expressed in long tons.

Figure A-7 Feldspar production and consumption statistics (1971).

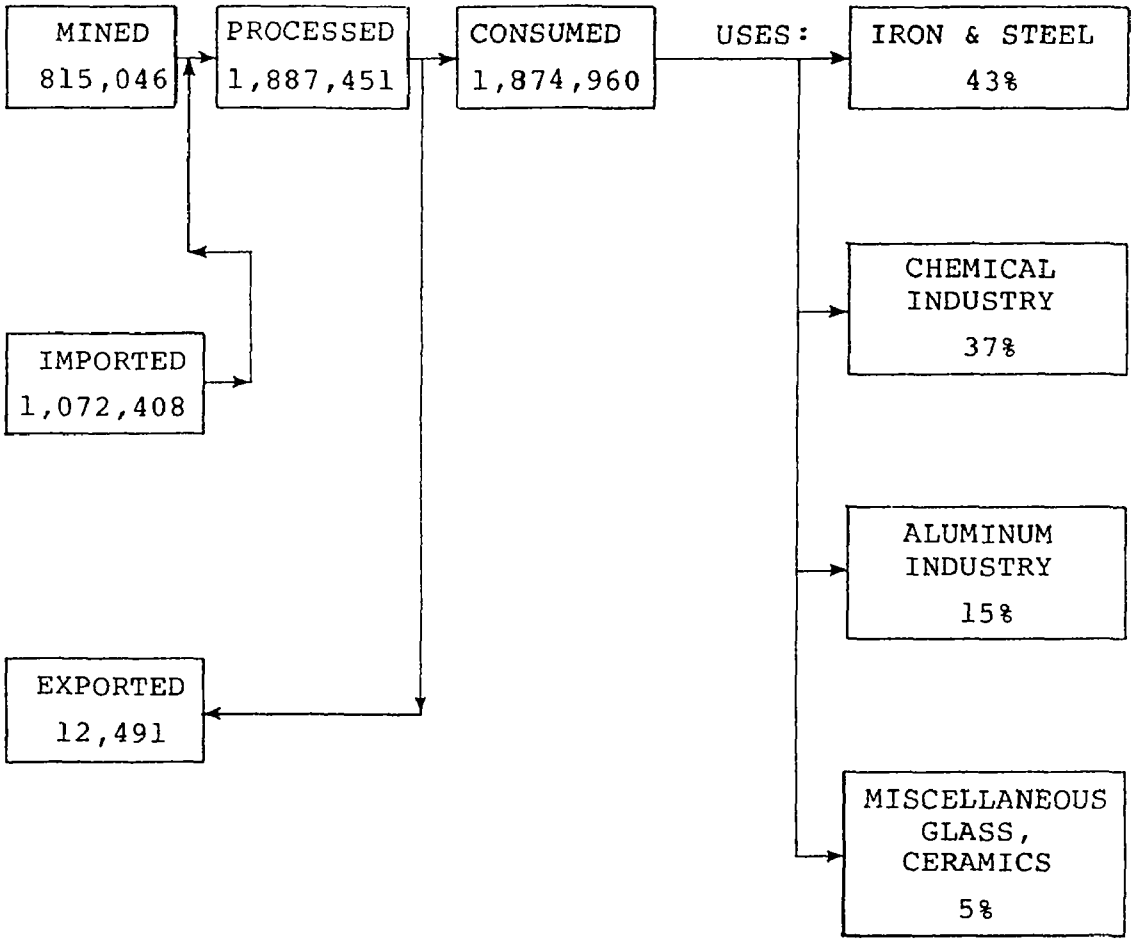

All quantities are expressed in short tons.

Figure A-8 Fluorspar production and consumption statistics (1971).

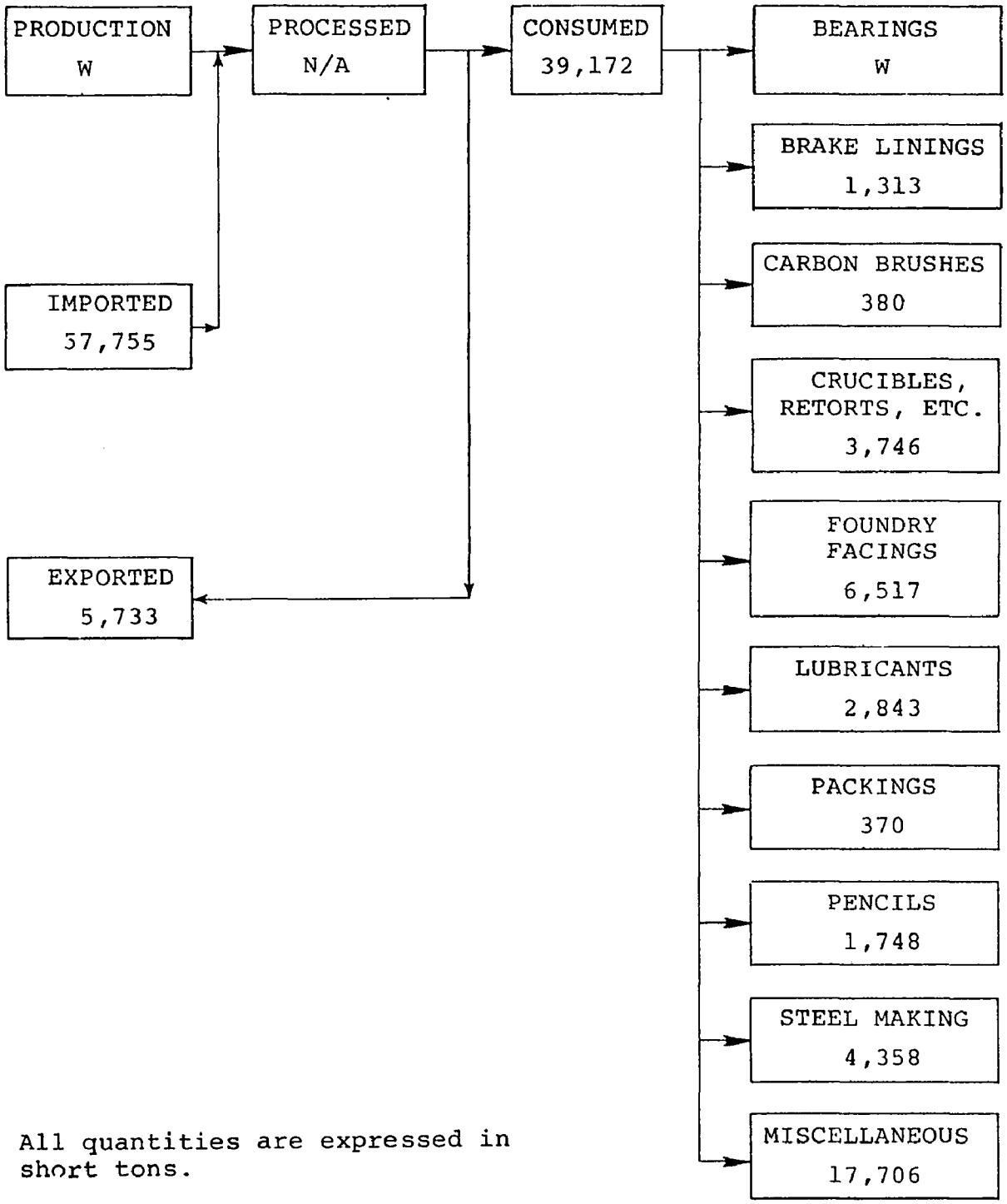

All quantities are expressed in short tons.

W: Information is withheld.

N/A: Not available.

Figure A-9 Natural graphite production and consumption statistics (1971).

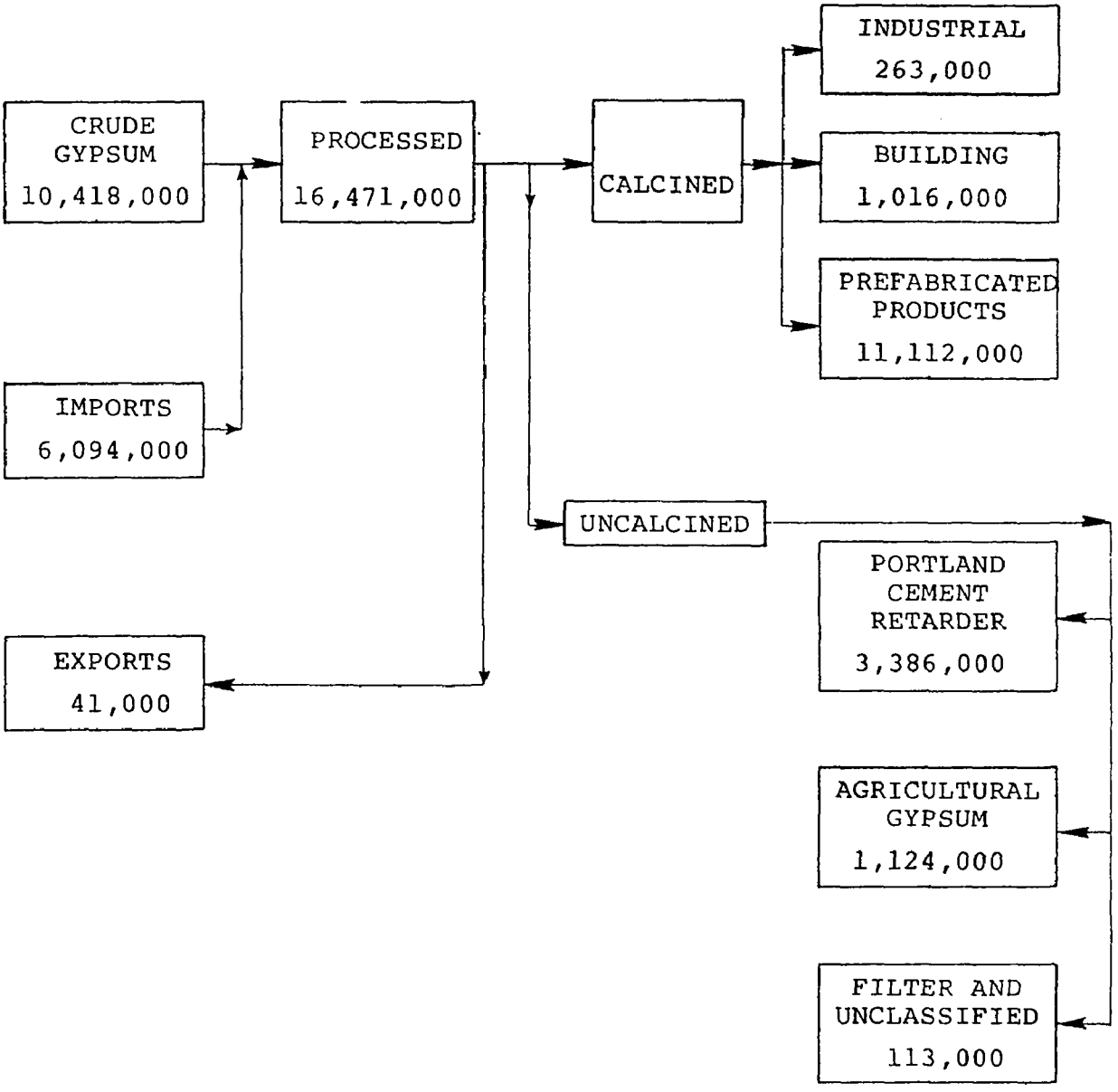

All quantities expressed in short tons.

Figure A-10 Gypsum production and consumption statistics (1971).

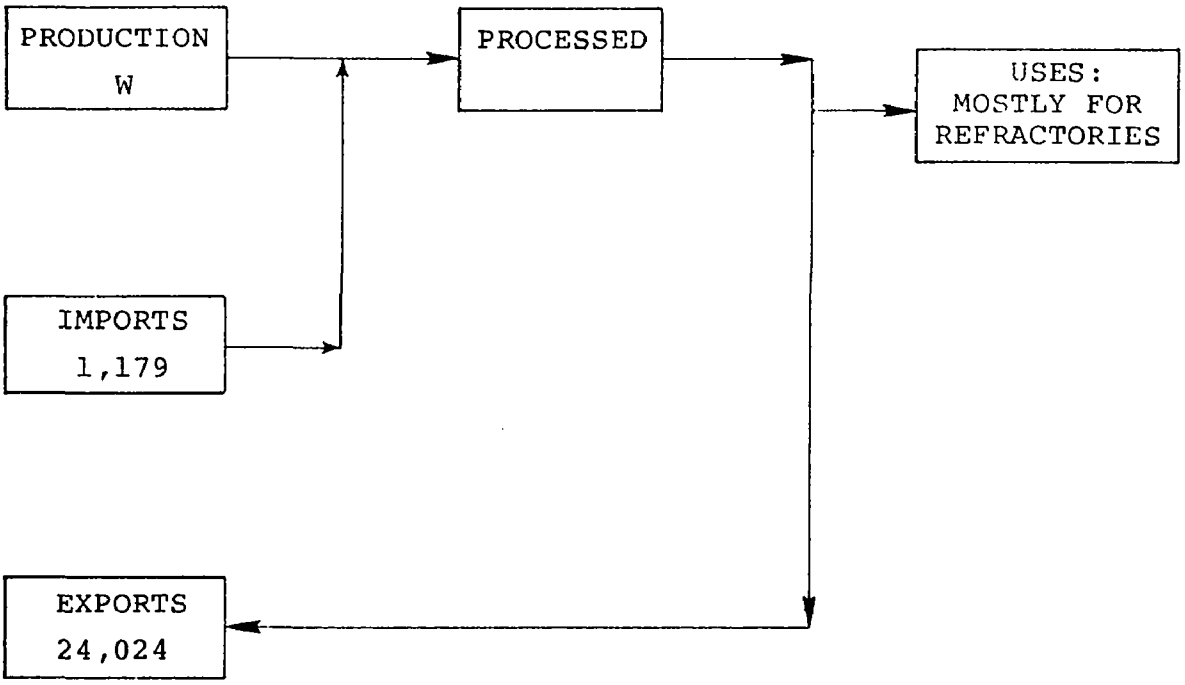

Quantities are expressed in short tons.

W: Specific kyanite production statistics are withheld.

Figure A-11 Kyanite and related minerals production and consumption statistics (1971).

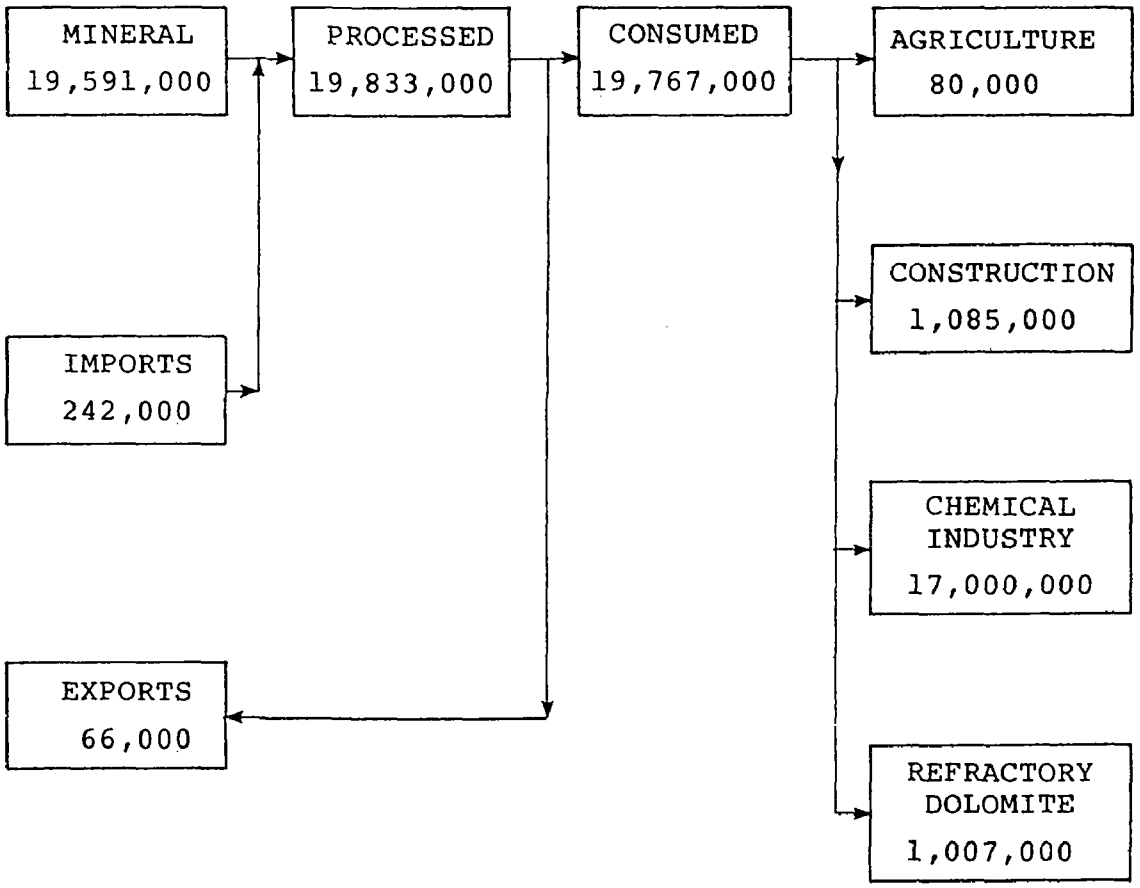

Quantities are given in short tons.

Figure A-12 Lime production and consumption statistics (1971).

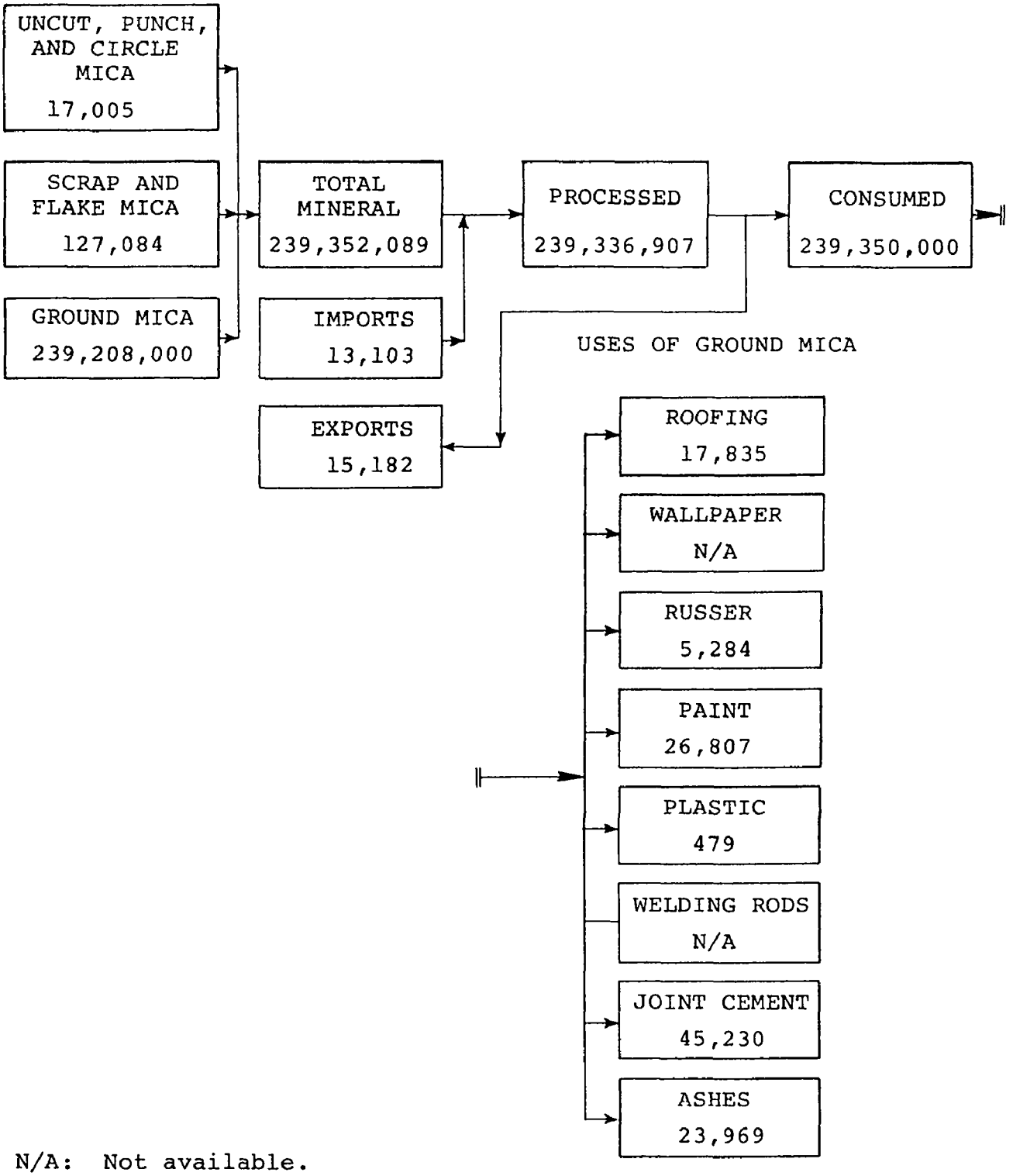

N/A: Not available.

Quantities are given in short tons.

Figure A-13 Mica production and consumption statistics (1971).

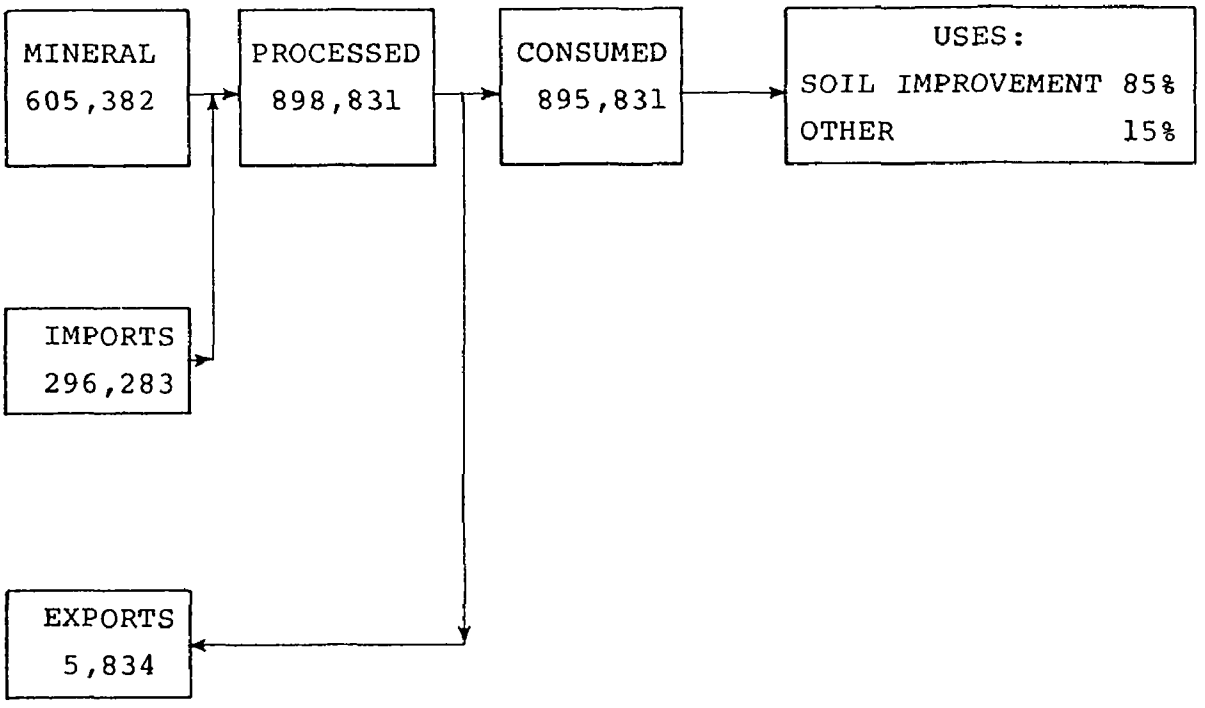

Quantities are expressed in short tons.

Figure A-14 Peat production and consumption statistics (1971).

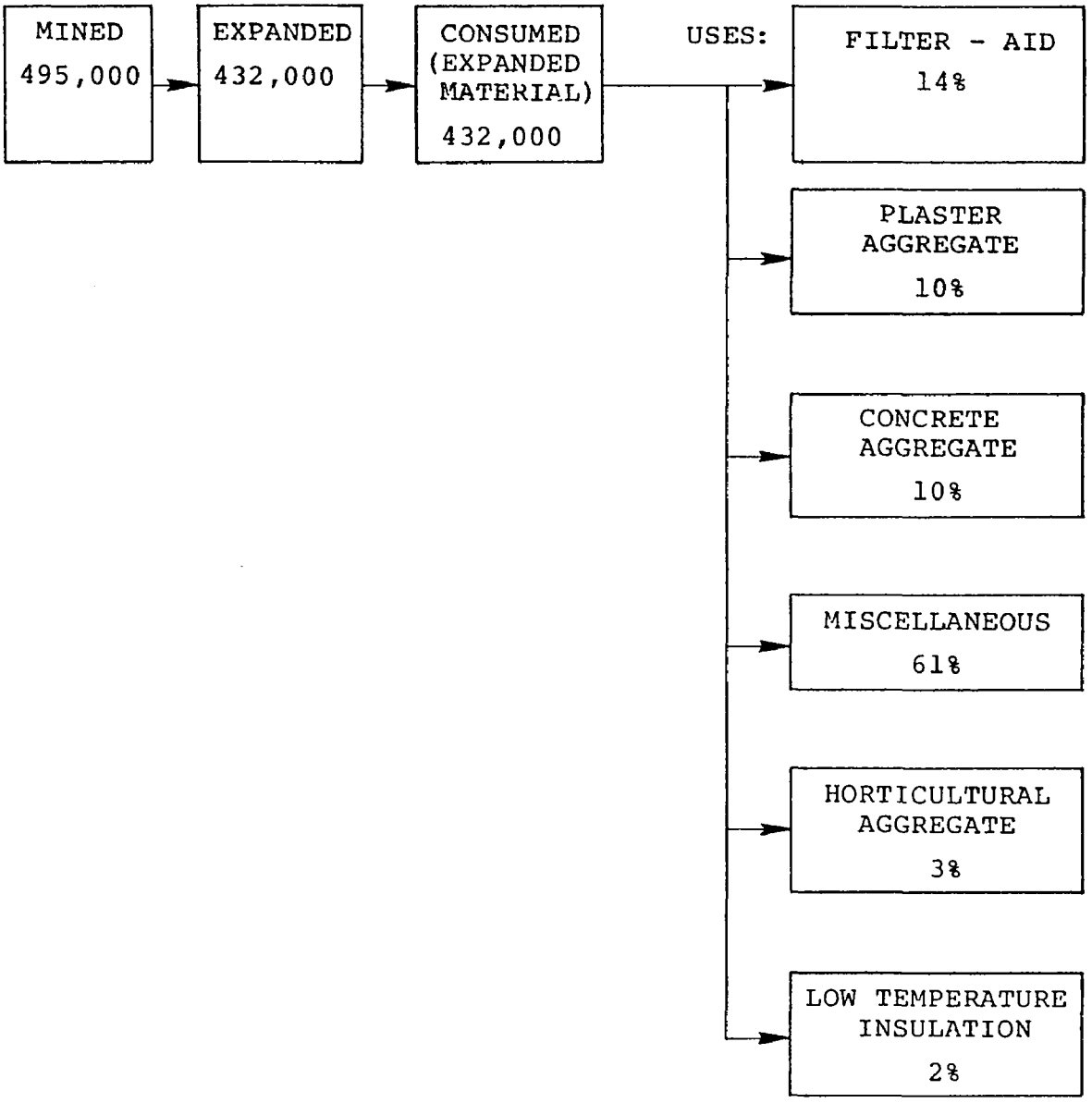

All quantities are expressed in short tons.

Figure A-15 Perlite production and consumption statistics (1971).

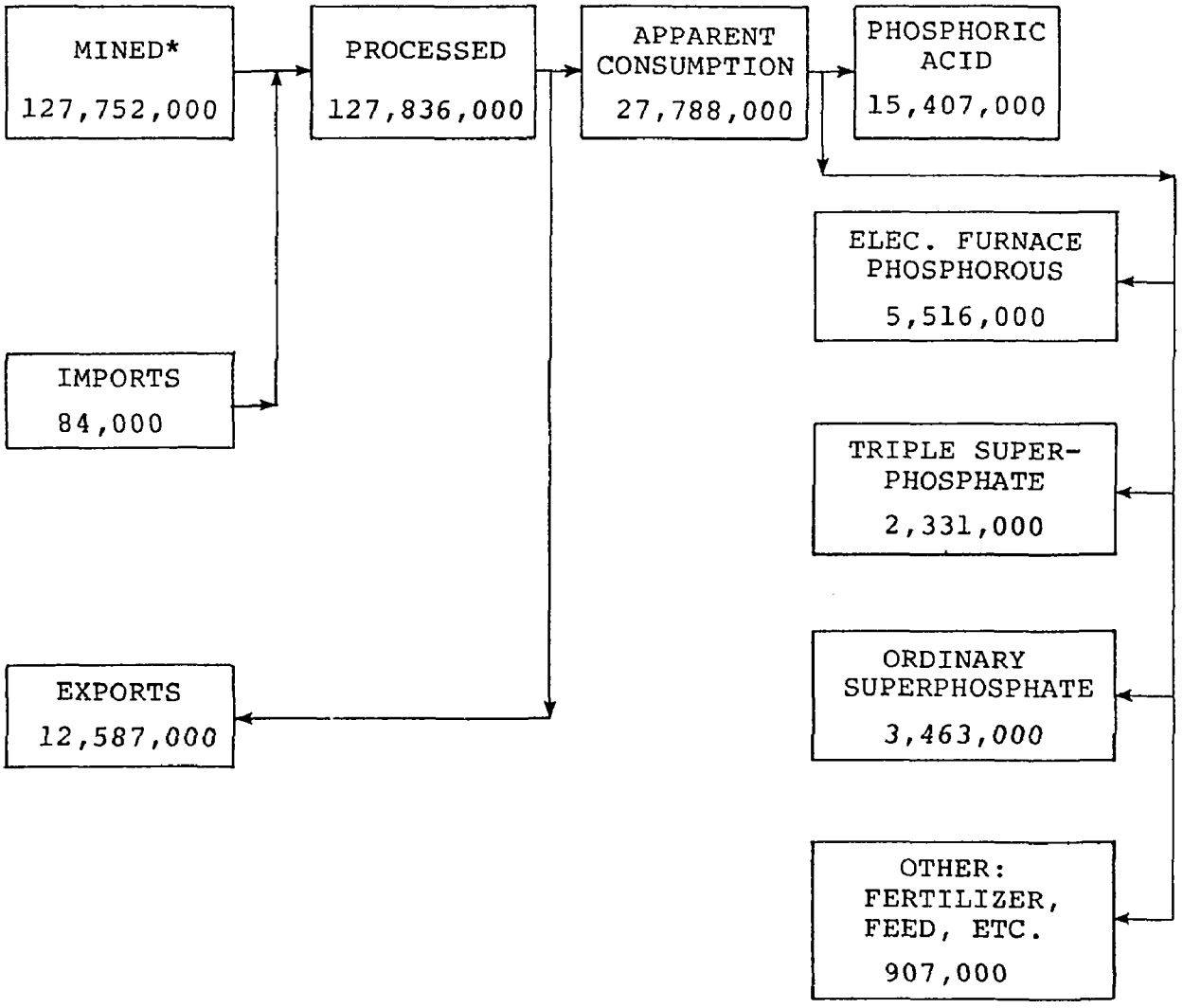

All quantities are expressed in short tons.

* Marketable product - produced = 38,886,000.

Figure A-16 Phosphate rock production and consumption statistics (1971).

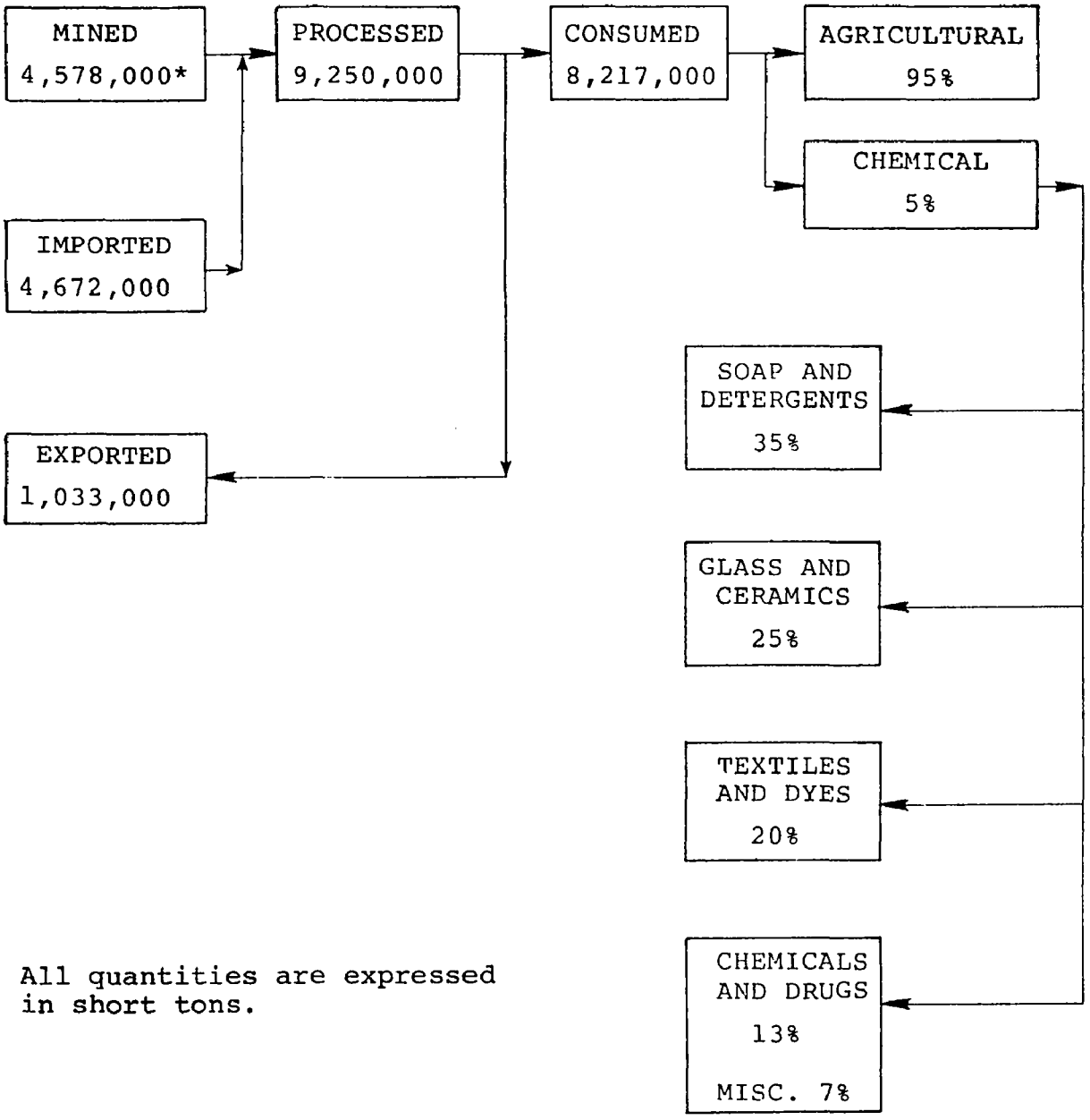

All quantities are expressed in short tons.

* Sold by producers: 4,543,000

Figure A-17 Potash production and consumption statistics (1971).

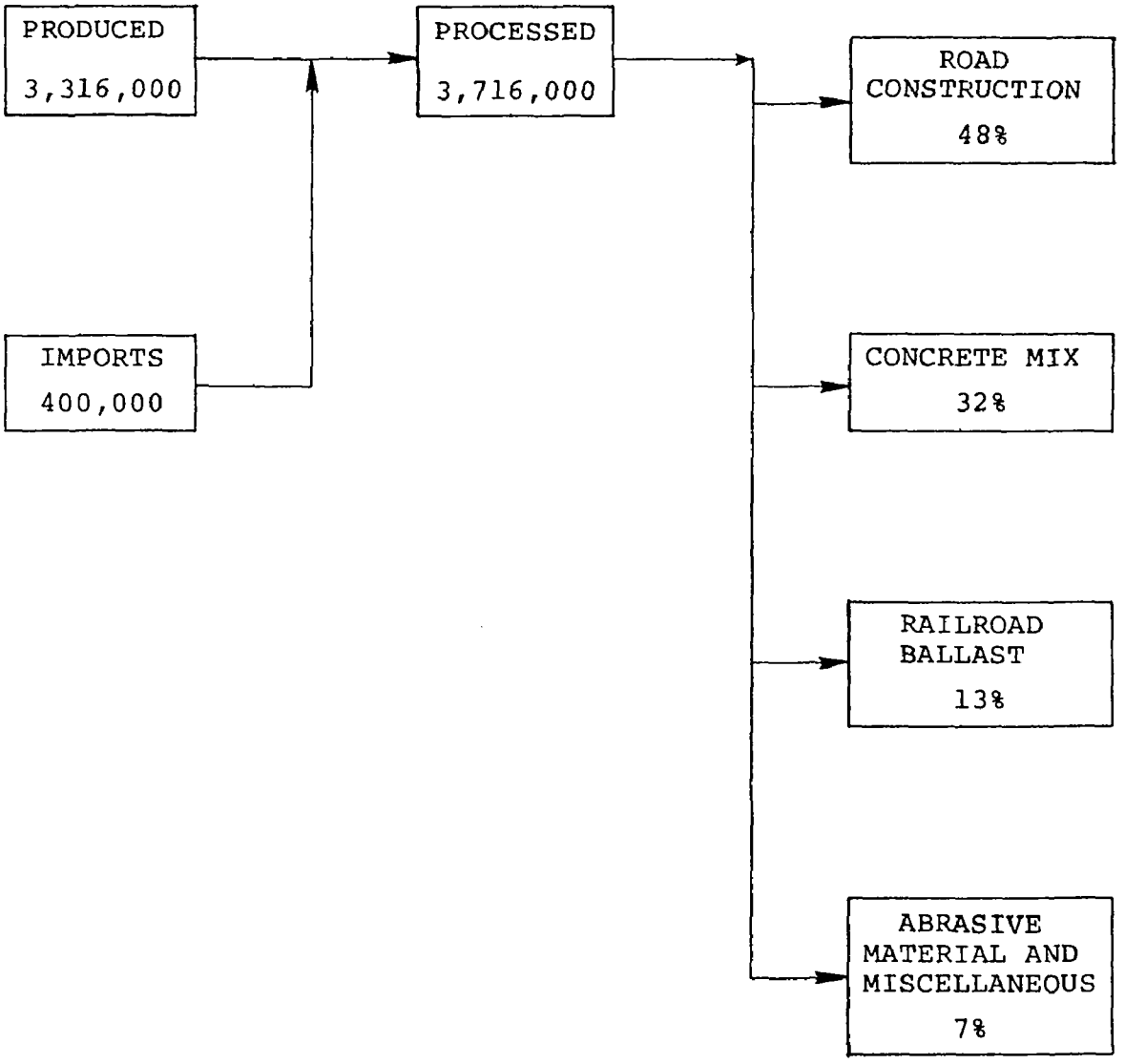

Quantities are expressed in short tons.

Figure A-18 Pumice production and consumption statistics (1971).

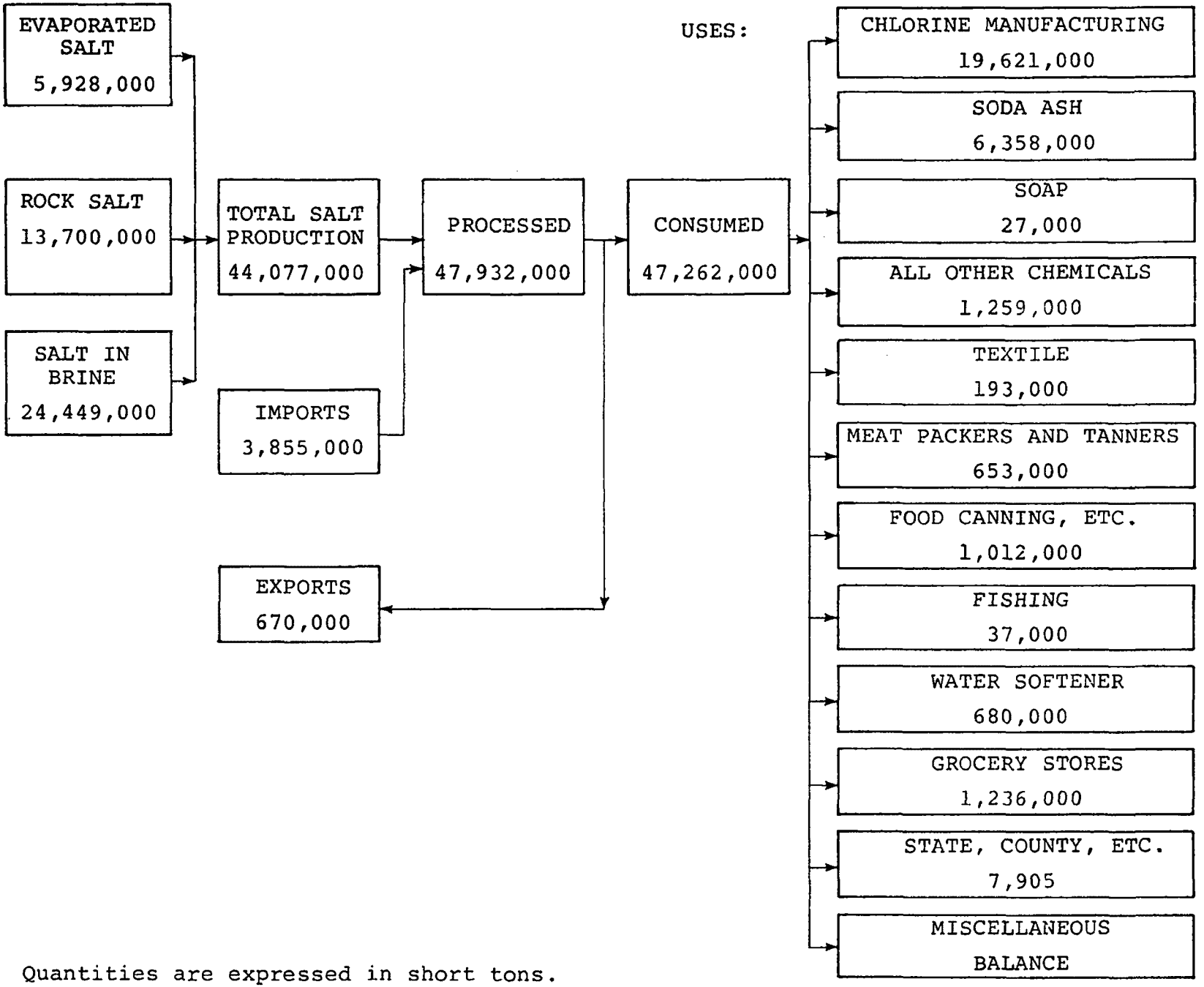

Quantities are expressed in short tons.

Figure A-19 Salt production and consumption statistics (1971).

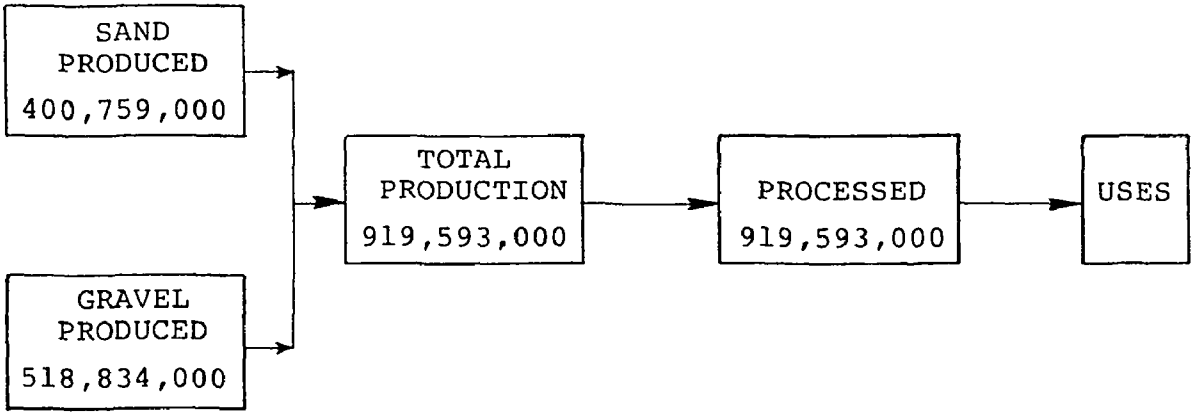

USES:

CONSTRUCTION SAND	374,594,000
GRAVEL	508,699,000
INDUSTRIAL SAND, UNGROUND	24,248,000
INDUSTRIAL SAND, GROUND	1,911,000
MISCELLANEOUS - GRAVEL	10,141,000
TOTAL:	919,593,000

Quantities are expressed in short tons.

Figure A-20 Sand and gravel production and consumption statistics (1971).

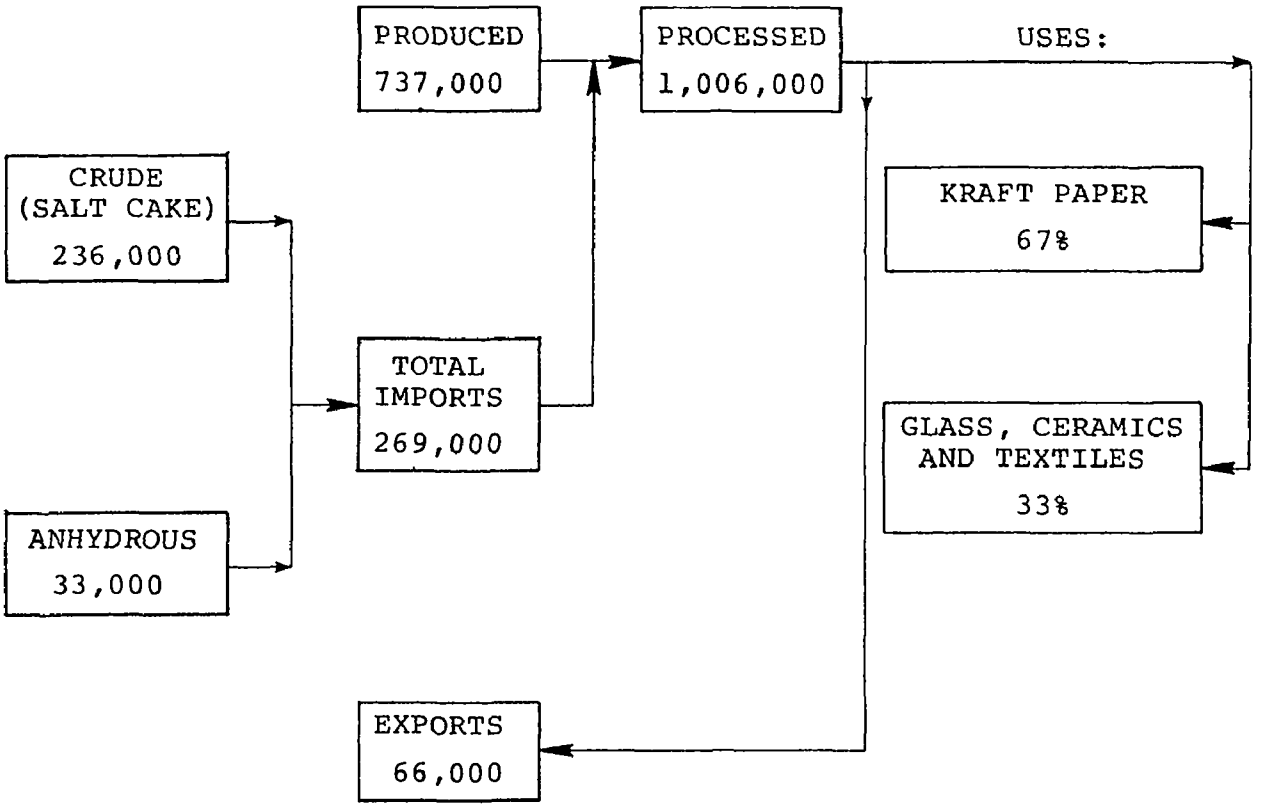

Quantities are expressed in short tons.

Figure A-21 Sodium sulfate production and consumption statistics (1971).

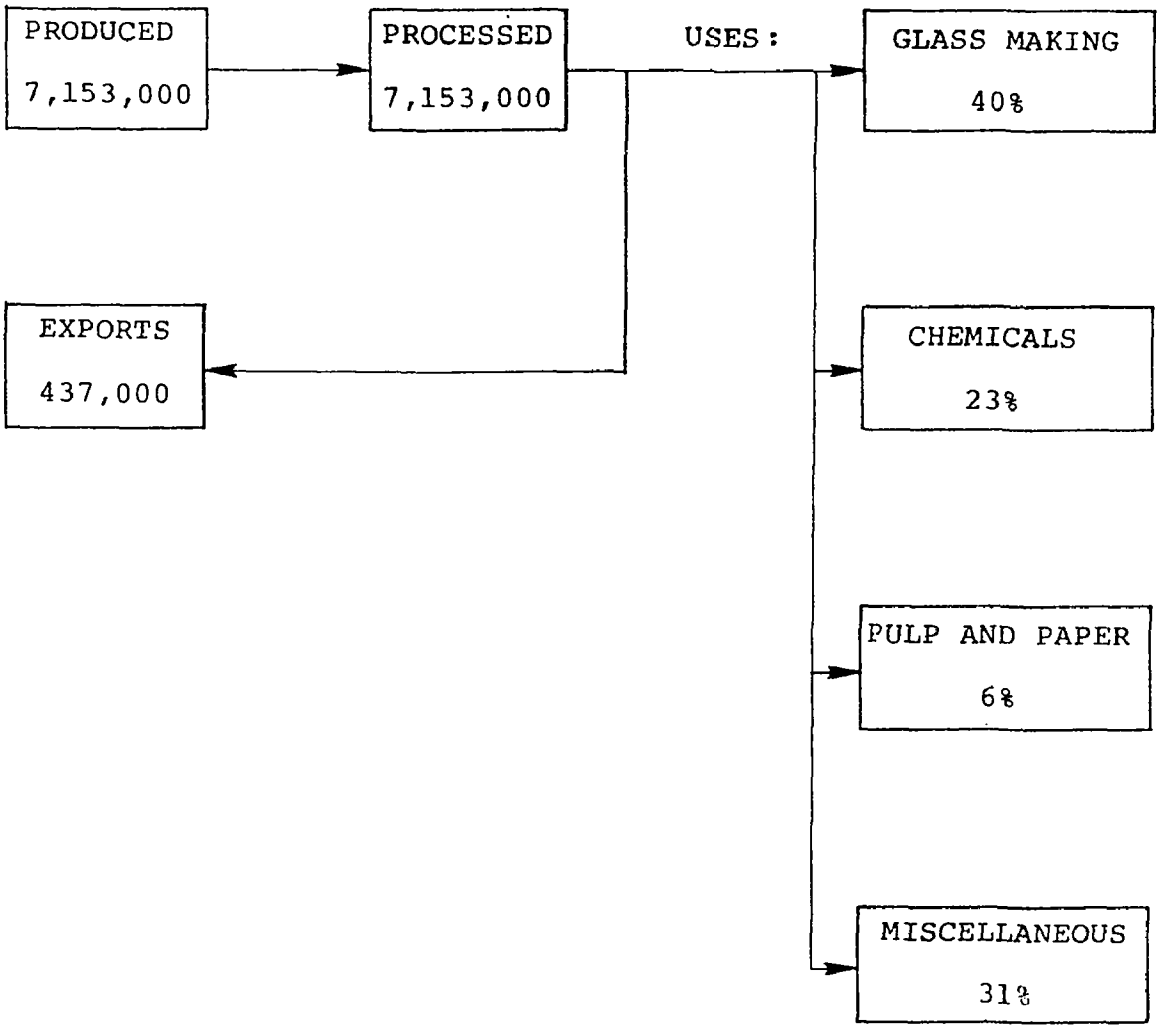

Quantities are expressed in short tons.

Figure A-22 Sodium carbonate production and consumption statistics (1971).

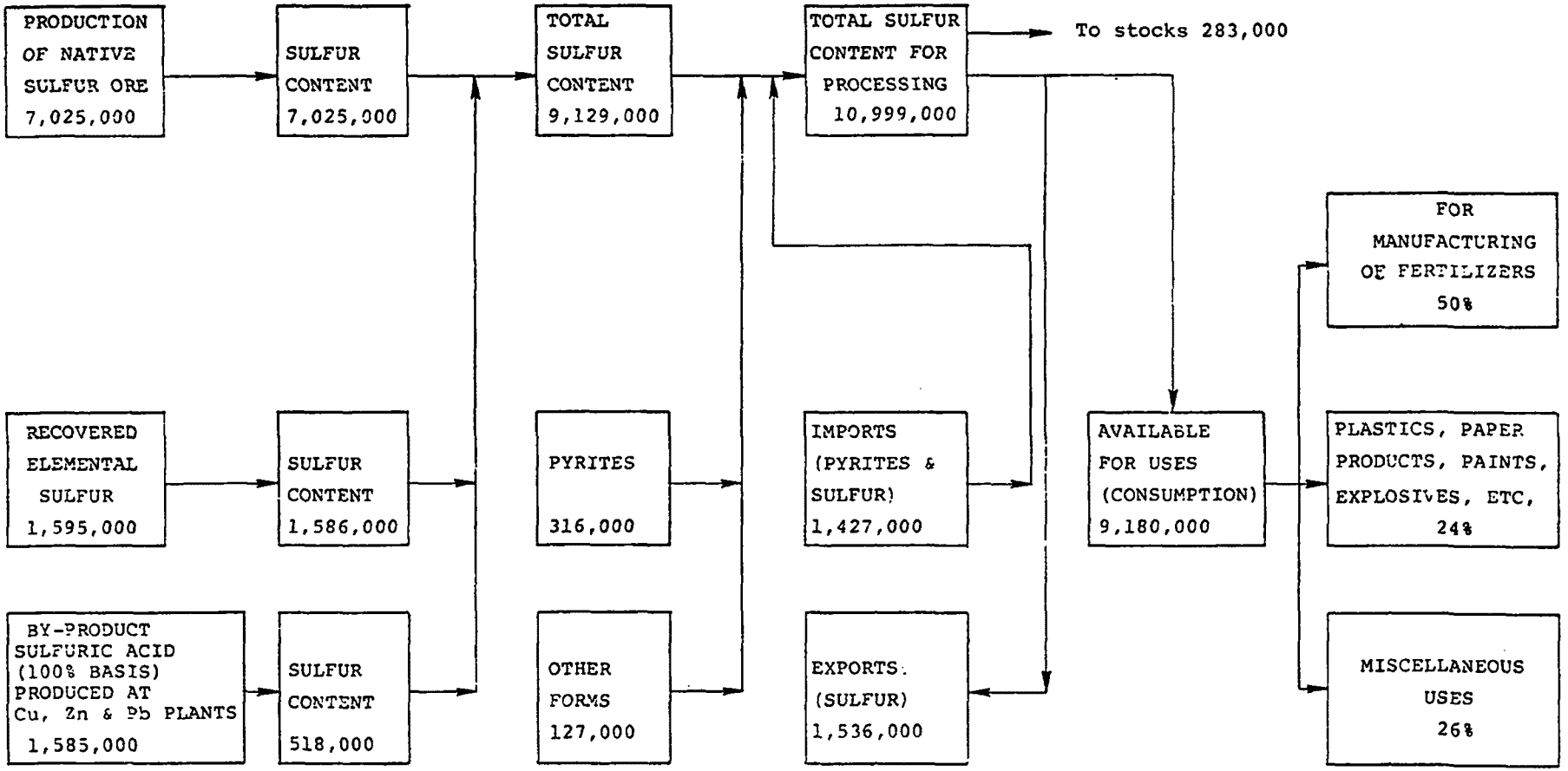

All quantities are expressed in long ton units.

Figure A-23 Sulfur and pyrites production and consumption statistics (1971).

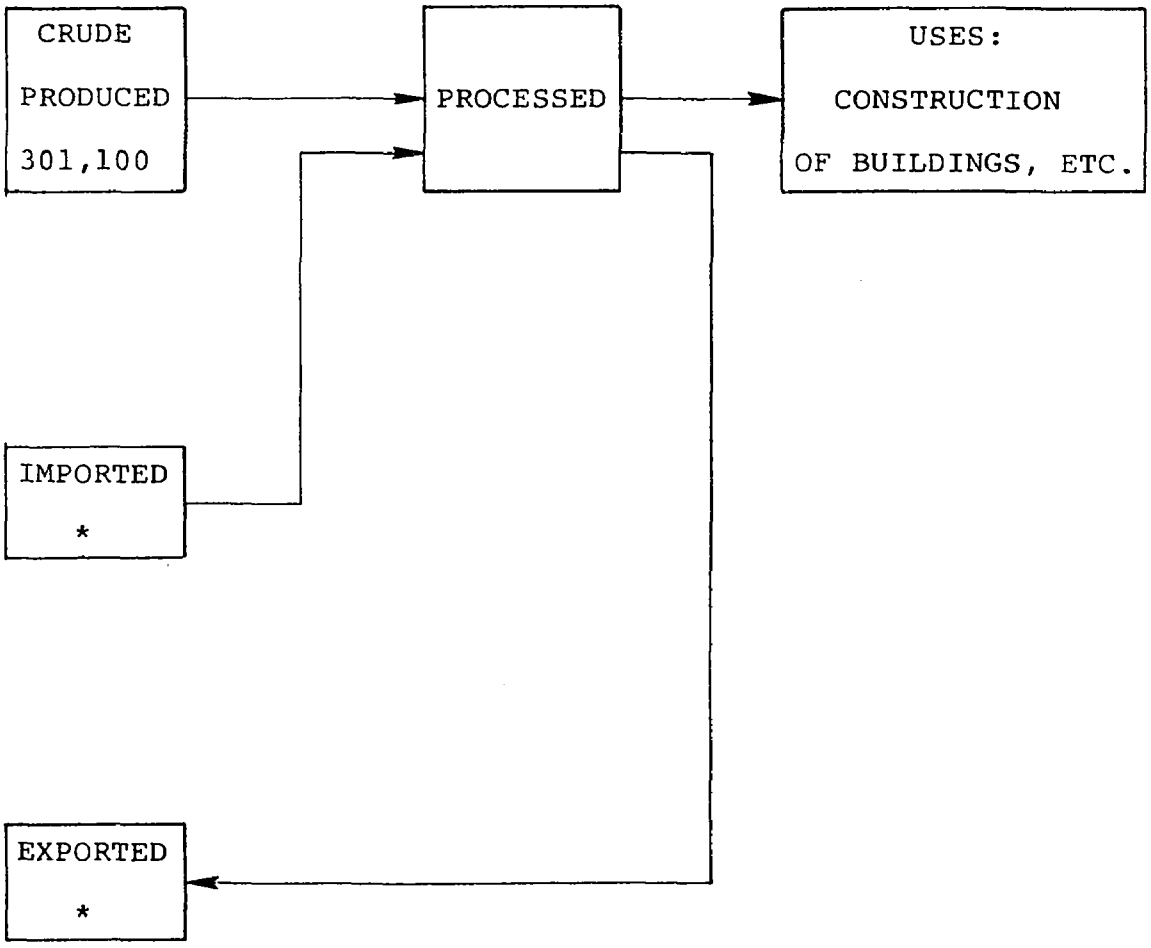

* Data are expressed as dollars worth.

All quantities are expressed in short tons.

Figure A-24 Stone production and consumption statistics (1971).

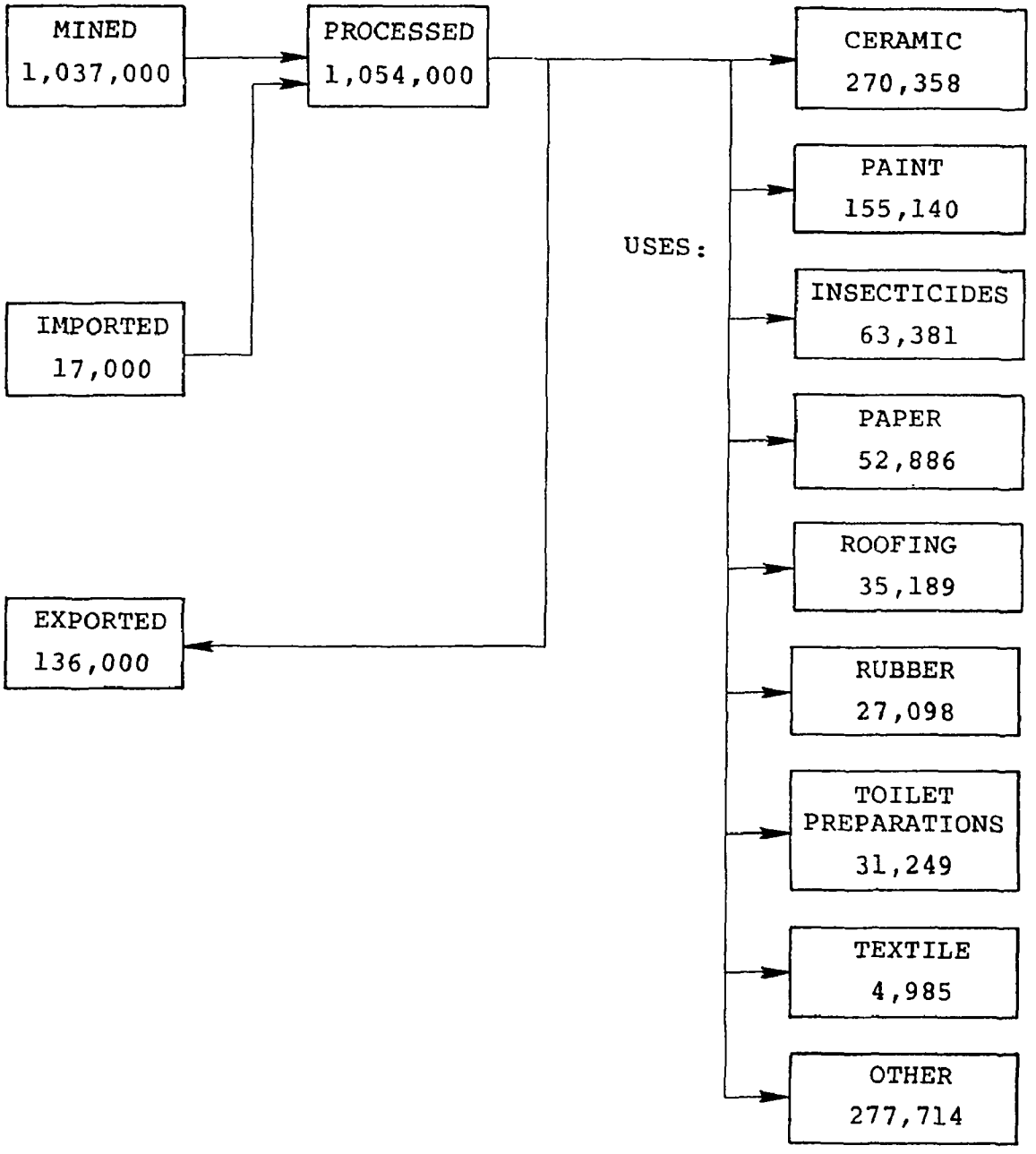

All quantities are expressed in short tons.

Figure A-25 Talc, soapstone, etc. (pyrophyllite) production and consumption statistics (1971).

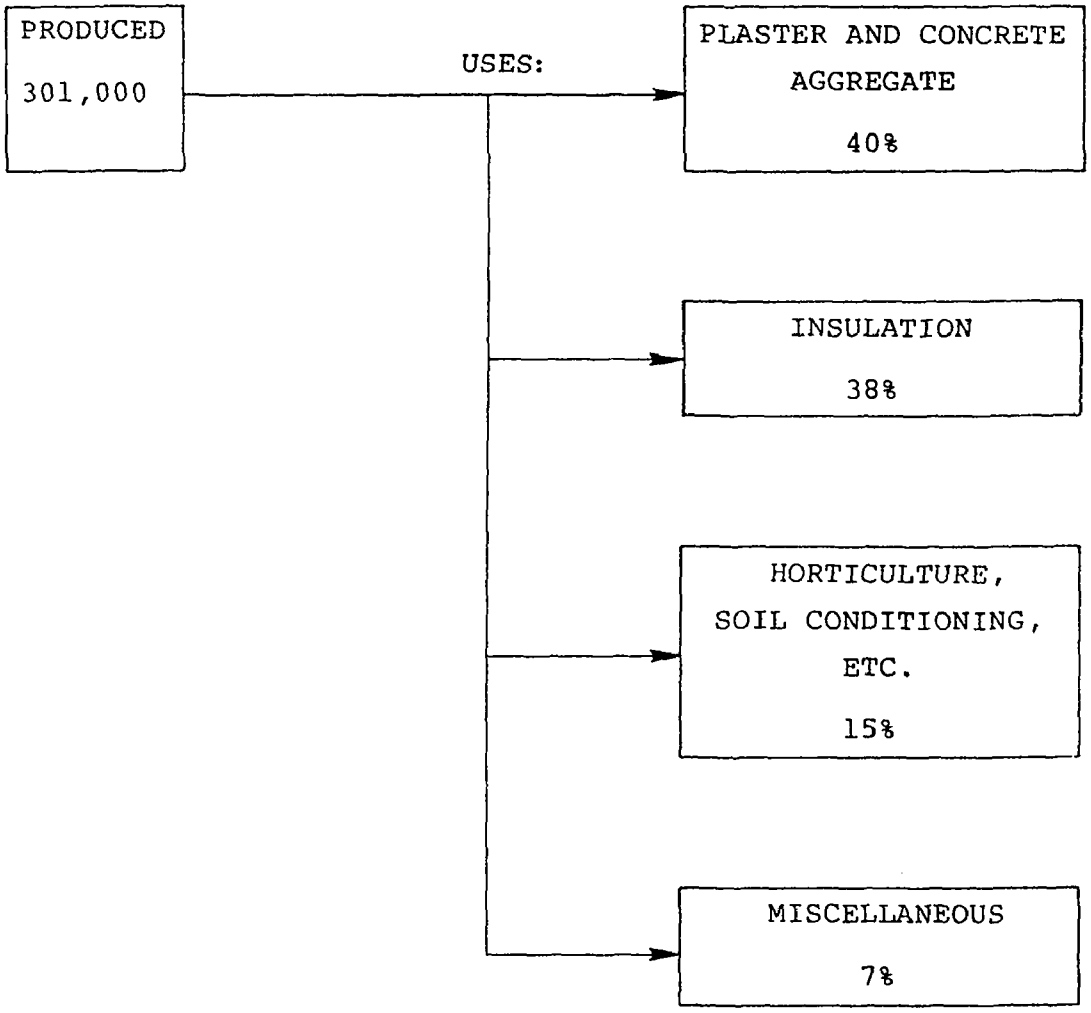

All quantities are expressed in short tons.

Figure A-26 Vermiculite production and consumption statistics (1971).

APPENDIX B

CEMENT PRODUCTION STATISTICS

Table B-1 PRINCIPAL PRODUCERS OF CEMENT IN THE UNITED STATES

Company	County	Type of Activity
American Cement Corp.	Riverside & San Bernardino, Calif.	Dry process and portland cement process
Calaveras Cement Co.	Calaveras & Shasta, Cal.	Wet & dry process, portland cement plant
California Portland Cement Co.	Kern & San Bernardino, Calif.	Dry process and portland cement plant
Ideal Cement Co.	San Benito & San Mateo, Calif.	Wet process and portland cement plant
Kaiser Cement & Gypsum Corp.	San Bernardino & Santa Clara, Calif.	Wet process and portland cement plant
Monolitti Portland Cement Co.	Kern, Calif.	Wet process and portland cement plant
Pacific Cement & Aggregates	Santa Cruz, Calif.	Dry process and portland cement plant
Pacific Western Industries	Kern, Calif.	Dry process and portland cement plant
Southwestern Portland Cement Co.	San Bernardino, Calif.	Wet & dry process, portland cement plant
Allentown Portland Cement Co.	Berks, Penn.	Plant

Table B-1 (continued). PRINCIPAL PRODUCERS OF CEMENT IN THE UNITED STATES

Company	County	Type of Activity
Allentown Portland Cement Co.	Montgomery, Penn.	Plant
Bessemer Cement Co.	Lawrence, Penn.	Plant
Coplay Cement Manufacturing Co.	Lehigh, Penn.	Plant
Dragen Cement Co.	Northampton, Penn.	Plant
Coplay Cement Manufacturing Co.	Northampton, Penn.	Plant
Green Bag Cement Co.	Allegheny, Penn.	Plant
Hercules Cement Co.	Northampton, Penn.	Plant
Keystone Portland Cement Co.	Northampton, Penn.	Plant
Lonestar Cement Corp.	Northampton, Penn.	Plant
Medusa Portland Cement Co.	Lawrence, Penn.	Plant
Medusa Portland Cement Co.	York, Penn.	Plant
National Portland Cement Co.	Northampton, Penn.	Plant
Penn-Dixie Cement Corp.	Butler, Penn.	Plant
Universal Atlas Cement	Lehigh, Penn.	Plant
Alpha Portland Cement Co.	Orange, Texas	Quarry & Plant
Capitol Aggregates, Inc.	Bexar, Texas	Plant

Table B-1 (continued). PRINCIPAL PRODUCERS OF CEMENT IN THE UNITED STATES

Company	County	Type of Activity
Centex Cement Corporation	Nueces, Texas	Quarry & Plant
General Portland Cement Co.	Dallas, Harris, & Tarrant, Texas	Quarry & Plant
Gifford-Hill & Co., Inc.	Ellis, Texas	Quarry & Plant
Gulf Coast Portland Cement Co.	Harris, Texas	Quarry & Plant
Ideal Cement Co.	Harris, Texas	Quarry & Plant
Kaiser Cement & Gypsum Corp.	Bexar, Texas	Plant
Lone Star Cement Corporation	Harris & Nolan, Texas	Quarry & Plant
San Antonio Portland Cement Co.	Bexar, Texas	Quarry & Plant
Southwestern Portland Cement Co.	Ellis& El Paso, Texas	Quarry & Plant
Texas Industries, Inc.	Ellis, Texas	Quarry & Plant
Universal Atlas Cement Div., United States Steel Corp.	McLennan, Texas	Quarry & Plant
Aetna Portland Cement Co. Div. of Martin Marietta Corp.	Bay, Michigan	Wet process
Dundee Cement Co.	Monroe, Michigan	Wet process
Huron Cement Co., Div. of National Gypsum Co.	Alpena, Michigan	Dry process

Table B-1 (continued). PRINCIPAL PRODUCERS OF CEMENT IN THE UNITED STATES

Company	County	Type of Activity
Medusa Portland Cement Co.	Charlevoix, Michigan	Wet process
Peerless Cement Co., Div. of American Cement Corp.		
Port Huron plant	St. Clair, Michigan	Wet process
Brennan Ave. plant	Wayne, Michigan	Wet process
Jefferson Ave. plant	Wayne, Michigan	Wet process
Penn.-Dixie Cement Corp.	Emmet, Michigan	Wet process
Wyandotte Chemicals Corp.	Wayne, Michigan	Wet process

Table B-2 PRODUCTION OF CEMENT IN UNITED STATES, BY STATES, 1971

State	Amount in Thousands S. Tons Mined	
	Portland	Masonry
Alabama	12,149	2,493
California	48,493	-
Florida	11,581	1,283
Georgia	6,458	448
Hawaii	1,993	79
Illinois	7,578	522
Indiana	W	W
Iowa	12,726	473
Kansas [a]	9,208	355
Michigan	32,489	1,704
Missouri	24,017	518
Ohio	15,411	1,010
Pennsylvania	41,753	2,994
Tennessee	9,110	1,135
Texas	38,287	1,209
Washington	W	W

a) Excludes certain cements, included with value of items that cannot be disclosed.
W Information withheld.

APPENDIX C

CLAY PRODUCTION STATISTICS

Table C-1 PRINCIPAL PRODUCERS OF CLAY IN THE UNITED STATES

Company	County	Type of Mineral Produced
Cairo Production Co.	Thomas, Georgia	Fuller's earth
Englehard Minerals & Chemicals Corp.	Decatur, Georgia	Fuller's earth
Georgia, Tennessee Mining & Chemical Co.	Jefferson, Georgia	Fuller's earth
Thor Mining Co.	Thomas, Georgia	Fuller's earth
Waverly Mining Products	Thomas, Georgia	Fuller's earth
American Industrial Clay Co. of Sandersville	McDuffie & Washington, Georgia	Kaolin
Eaglehard Minerals & Chemical Corp.	Washington & Wilkinson, Georgia	Kaolin
Freeport Kaolin Co.	Twiggs, Georgia	Kaolin
Georgia Kaolin Co.	Twiggs, Georgia	Kaolin
J. M. Huber Corp.	Twiggs & Warren, Ga.	Kaolin
Burns Brick Co.	Bibb, Georgia	Miscellaneous
Chattahoochee Brick Co.	Floyd, Fulton & Polk, Ga.	Miscellaneous
Cherokee Brick & Tile Co.	Bibb, Georgia	Miscellaneous
Merry Brothers Brick & Tile Co.	Richmond, Georgia	Miscellaneous
Southern Cement Co., Div. of Martin Mariella Corp.	Jasper, Georgia	Miscellaneous
Acme Brick Co.	Denton, Guadalupe. Henderson, Nacogdoches, Parker, Wise, Texas	Clays & shale

Table C-1 (continued). PRINCIPAL PRODUCERS OF CLAY IN THE UNITED STATES

Company	County	Type of Mineral Produced
Alpha Portland Cement Co.	Orange, Texas	Clays & shale
Dresser Minerals	Angelina & Limestone, Texas	Clays & shale
Elgin Butler Brick Co.	Bastrop, Texas	Clays & shale
Featherlite Corp.	Bexar & Eastland, Texas	Clays & shale
General Portland Cement	Dallas, Harris, Limestone, Texas	Clays & shale
General Refractories Co.	Cherokee, Texas	Clays & shale
Gulf Coast Portland Cement Co., Div. of McDonough	Chambers, Texas	Clays & shale
Henderson Clay Products Co.	Rusk, Texas	Clays & shale
Ideal Cement Co., Div. of Ideal-Basic Industries Inc.	Galveston, Texas	Clays & shale
Lone Star Cement Corp.	Fisher & Harris, Texas	Clays & shale
The Millwhite Co., Inc.	Fayette & Walker, Texas	Clays & shale
Reliance Clay Products Co.	Ellis, Palo Pinto, and Smith, Texas	Clays & shale
Southern Clay Products Inc.	Cherokee & Genzales, Texas	Clays & shale
Texas Clay Products Inc.	Henderson, Texas	Clays & shale
Texas Industries Inc.	Dallas, Eastland, Ellis, & Fort Bend, Texas	Clays & shale
AFC Corporation	Mahoning, Ohio	Fire clay
The Belden Brick Co.	Stark & Tuscarawas, Ohio	Fire clay & shale

Table C-2 PRODUCTION OF CLAYS IN THE UNITED STATES, BY STATE, 1971

State	Quantity in S. Tons
Georgia	5,111,000
Texas	4,687,000
Ohio	4,750,000
N. Carolina	3,310,000 [a]
Alabama	2,793,000
Arizona	77,000
Arkansas	919,000 [a]
California	2,755,000 [a]
Colorado	616,000 [a]
Connecticutt	195,000
Delaware	12,000
Florida	808,000 [a]
Hawaii	3,000
Idaho	12,000 [a]
Illinois	2,327,000 [a]
Indiana	1,550,000
Iowa	1,264,000
Kansas	932,000
Kentucky	1,219,000 [a]
Louisiana	863,000
Maine	42,000 [a]
Maryland	1,078,000 [a]
Massachusetts	257,000
Minnesota	240,000 [a]
Mississippi	1,693,000
Missouri	2,433,000
Montana	30,000
Nebraska	28,000
New Hampshire	41,000
New Jersey	373,000
New Mexico	66,000
New York	1,675,000
Oklahoma	726,000 [a]
Oregon	213,000 [a]

Table C-2 (continued). PRODUCTION OF 'CLAYS' IN THE UNITED STATES, BY STATE, 1971

State	Quantity in S. Tons
Pennsylvania	3,034,000
South Carolina	1,936,000
South Dakota	226,000
Tennessee	1,562,000 [a]
Utah	160,000 [a]
Virginia	1,462,000
Washington	255,000 [a]
West Virginia	193,000 [a]
Wisconsin	17,000
Wyoming	1,828,000

a) Excludes certain clays, including value of items that cannot be disclosed.

APPENDIX D

GYPSUM PRODUCTION STATISTCS

Table D-1 PRINCIPAL PRODUCERS OF GYPSUM IN THE UNITED STATES

Company	County	Activity
Georgia-Pacific Corp.	Kent, Michigan	Underground mine, calcining, and board plant
Grand Rapids Gypsum Co.	Kent, Michigan	Underground mine, calcining, and board plant
Michigan Gypsum Co.	Iosco, Michigan	Open-pit mine
National Gypsum Co.	Iosco, Michigan	Open-pit mine, calcining, and board plant
United States Gypsum Co.	Iosco, Michigan	Open-pit mine
United States Gypsum Co.	Wayne, Michigan	Calcining and board plant
H. M. Holloway, Inc.	Kern, Calif.	Open-pit mine
Temblor Gypsum Co.	Kern, Calif.	Open-pit mine
United States Gypsum Co.	Imperial, Calif.	Open-pit mine and calcining plant
The Celotex Corp.	Fisher, Texas	Open-pit mine and calcining plant
The Flintkote Co.	Nolan, Texas	Open-pit mine and calcining plant
Georgia-Pacific Corp.	Hardeman, Texas	Open-pit mine and calcining plant
National Gypsum Co.	Fisher, Texas	Open-pit mine and calcining plant
United States Gypsum Co.	Nolan, Texas	Open-pit mine and calcining plant
United States Gypsum Co.	Harris, Texas	Plant
The Celotex Corp.	Webster, Iowa	Open-pit mine, calcining, and board plant

Table D-1 (continued). PRINCIPAL PRODUCERS OF GYPSUM IN THE UNITED STATES

Company	County	Activity
Georgia-Pacific Corp.	Webster, Iowa	Open-pit mine, calcining, and board plant
National Gypsum Co.	Webster, Iowa	Open-pit mine, calcining, and board plant
United States Gypsum Co.	Webster, Iowa	Open-pit mine, calcining, and board plant
United States Gypsum Co.	Des Moines, Iowa	Underground mine, calcining and board plant
Arizona Gypsum Corp. Verde Division Winkelman Division	 Yavapai, Arizona Pinal, Arizona	 Open-pit mine and plant Open-pit mine and plant
National Gypsum Co.	Pinal, Arizona	Open-pit mine and plant
Dulin Bauxite Co., Inc.	Pike, Arkansas	Mine and plant
Weyerhaesur Co.	Howard, Arkansas	Mine and plant
Johns-Manville Products Corp.	Fremont, Colorado	Open-pit mine and wallboard plant
National Gypsum Co.	Martin, Indiana	Underground mine and calcining plant
United States Gypsum Co.	Lake & Martin, Ind.	Underground mine and 2 calcining plants
Georgia-Pacific Corp.	Marshall, Kansas	Quarry and plant
National Gypsum Co.	Barber, Kansas	Quarry and plant
National Gypsum Co.	Jefferson, Louisiana	Calcining plant
United States Gypsum Co.	New Orleans, Louisiana	Calcining plant
Winn Rock, Inc.	Winn, Louisiana	Quarry and plant
United States Gypsum Co.	Fergus, Montana	Underground mine and calcining plant

Table D-1 (continued). PRINCIPAL PRODUCERS OF GYPSUM IN THE UNITED STATES

Company	County	Activity
The Flintkote Co.	Clark, Nevada	Open-pit mine
Johns-Manville Products Corp.	Clark, Nevada	Open-pit mine
United States Gypsum Co.	Pershing, Nevada	Open-pit mine
White Mesa Gypsum Co.	Sandoval, N. Mexico	Open-pit mine
Georgia-Pacific Corp.	Erie, N. Y.	Underground mine and calcining plant
Georgia-Pacific Corp.	Westchester, N. Y.	Calcining plant
National Gypsum Co.	Erie, New York	Underground mine and calcining plant
United States Gypsum Co.	Genesee, New York	Underground mine and calcining plant
United States Gypsum Co.	Richmond & Rockland, N. Y.	Calcining plant
National Gypsum Co.	Bronx, New York	Calcining plant
The Celotex Corp. (Crude gypsum)	Ottawa, Ohio	Pit
United States Gypsum Co. (Crude gypsum)	Ottawa, Ohio	Underground
National Gypsum Co. (Calcined gypsum)	Lorain, Ohio	Plant
Republic Gypsum Co.	Jackson, Okla.	Quarry and plant
United States Gypsum Co.	Blaine, Okla.	Quarry and plant
Universal Atlas Cement	Blaine, Okla.	Quarry
South Dakota Cement Comm.	Meade, S. Dakota	Open pit mine

Table D-1 (continued). PRINCIPAL PRODUCERS OF GYPSUM IN THE UNITED STATES

Company	County	Activity
Georgia-Pacific Corp.	Sevier, Utah	Open-pit mine and calcining plant
United States Gypsum Co.	Sevier, Utah	Open-pit mine and calcining plant
United States Gypsum Co.	Chesapeake, Va. (Process imported gyp.)	Plant
United States Gypsum Co.	Washington, Virginia	Mine and plant
Kaiser Gypsum Co.	King, Washington	Plant
Big Horn Gypsum Co.	Park, Wyoming	Open-pit mine and wallboard plant

Table D-2 PRINCIPAL GYPSUM PRODUCING STATES IN THE UNITED STATES, 1971

State	Quantity (short tons)
Michigan	1,433,000
California	1,352,000
Texas	1,303,000
Iowa	1,154,000
Other producing states:	
Arizona	W
Arkansas	W
Colorado	W
Indiana	W
Kansas	W
Louisiana	W
Montana	W
Nevada	695,000
New Mexico	W
New York	415,000
Ohio	W
Oklahoma	1,022,000
South Dakota	21,000
Utah	W
Virginia	W
Washington	W
Wyoming	232,000

APPENDIX E

LIME PRODUCTION STATISTICS

Table E-1 PRINCIPAL PRODUCERS OF LIME IN THE UNITED STATES

Company	County & State	Type of Activity
Basic Incorporated	Seneca, Ohio	Plant
Cuyahoga Lime Company	Cuyahoga, Ohio	Plant
Diamond Shamrock Chemical Co.	Lake, Ohio	Plant
The National Lime & Stone Co.	Wyandot, Ohio	Plant
Huron Lime Co.	Erie, Ohio	Plant
Ohio Lime Co.	Sandusky, Ohio	Plant
Charles Pfizer & Co., Inc.	-	-
PPG Industries, Inc.	Summit, Ohio	Plant
Republic Steel Corp.	Lake, Ohio	Plant
Standard Lime & Refractories Co.	Sandusky, Ohio	-
Union Carbide Corp.	Ashtabula, Ohio	-
United States Gypsum Co.	Ottawa, Ohio	-
U. S. Steel Corp.	Lorain, Ohio	-
The J. E. Baker Co.	York, Penn.	-
Mercer Lime & Stone Co.	Butler, Penn.	-
National Gypsum Co.	Centre, Penn.	-
Standard Lime & Refractories Co.	Centre, Penn.	-
Warner Co.	Centre & Chester, Pa.	-
Detroit Lime Co.	Wayne, Michigan	Quick lime, shaft, rotary kilns
The Dow Chemical Co.	Mason, Michigan	Quick lime, kiln & hydrator
Marblehead Lime Co.	Wayne, Michigan	Quick lime & kiln

Table E-1 (Cont'd.)PRINCIPAL PRODUCERS OF LIME BY STATE, 1971

Company	County & State	Type of Activity
Wyandotte Chemical Corp.	Wayne, Michigan	Quick lime & kiln
Aluminum Co. of America	Calhoun, Texas	Plant
Armco Steel Corp.	Harris, Texas	Plant
Austin White Lime Co.	Travis, Texas	Plant
Champion Papers, Inc.	Harris, Texas	Plant
The Dow Chemical Co.	Brazoria, Texas	Plant
Eastex, Inc.	Jasper, Texas	Plant
McDonough Bros., Inc.	Bexar, Texas	Plant
PPG Industries, Inc.	Nueces, Texas	Plant
Round Rock Lime Co.	Hill & Williamson, Texas	Plant
Texas Lime Co.	Johnson, Texas	Plant
United States Gypsum Co.	Comal & Harris, Texas	Plant
Alabaster Lime Co.	Shelby, Alabama	Lime kiln
Cheney Lime & Cement Co.	Shelby, Alabama	Lime kiln
Longview Lime Co.	Shelby, Alabama	Lime kiln
Southern Cement Co.	Shelby, Alabama	Lime kiln
United States Gypsum Co.	Shelby, Alabama	Lime kiln

Table E-2 PRODUCTION OF LIME IN THE UNITED STATES, BY STATE, 1971

State	Quantity (in s.. tons)	No. of Plants
Ohio	3,701,000	
Pennsylvania	1,702,000	
Michigan	1,630,000	10
Texas	1,564,000	
Alabama	773,000	5
Arizona	260,000	7
Arkansas	206,000	3
California	568,000	15
Colorado	125,000	11
Florida	125,000	3
Hawaii	8,000	2
Kansas	W	1
Louisiana	781,000	4
Massachusetts	198,000	2
Montana	179,000	4
Nebraska	148,000	4
New Mexico	27,000	1
New York	1,086,000	3
Oregon	120,000	3
Utah	174,000	6
Vermont	W	W
Virginia	919,000	8
West Virginia	207,000	3
Wisconsin	224,000	6
Wyoming	W	3

W: Withheld

Table E-3 LIME PRODUCED IN THE UNITED STATES, BY SIZE OF PLANT[1], (thousand short tons)

Size of Plant	1971		
	Plants	Quantity	Percent of Total
Less than 10,000 tons	30	138	1
10,000 to 25,000 tons	37	590	3
25,000 to 50,000 tons	37	1,404	7
50,000 to 100,000 tons	26	1,775	9
100,000 to 200,000 tons	25	3,805	19
200,000 to 400,000 tons	26	7,215	37
More than 400,000 tons	7	4,708	24
Total	188	19,635	100

1) Excludes regenerated lime. Includes Puerto Rico.

APPENDIX F

PHOSPHATE INDUSTRY STATISTICS

Table F-1 PRINCIPAL PHOSPHATE ROCK PRODUCING COMPANIES IN THE UNITED STATES

Company	County & State
Agrico Chemical Co.	Polk, Florida
American Cyanamid Co.	Hillsborough & Polk, Fla.
International Minerals & Chemical Corp.	Polk, Florida
Mobil Chemical Co.	Hamilton, Florida
U. S. S. Agri-Chemicals, Inc.	Polk, Florida
Howard Phosphate Co.	Citrus, Florida
Kellog Co.	Citrus, Florida
Loncala Phosphate Co.	Marian & Gilchrist, Fla.
Soil Builders, Inc.	Citrus, Florida
Sun Phosphate Co.	Citrus, Florida
Monsanto Co.	Caribou, Idaho
J. R. Simplot Co.	Bingham & Caribou, Idaho
Stauffer Chemical Co.	Caribou, Idaho
Hooker Chemical Corp.	Hickman & Maury, Tenn.
Monsanto Co.	Davidson, Gibs, Hickman, Maury & Williamson, Tenn.
Stauffer Chemical Co.	Maury, Tennessee
Tennessee Valley Authority	Maury & Williamson, Tenn.
M. C. West, Inc.	Hickman, Tennessee
Texas Gulf Sulphur Co.	Beaufort, N. C.
Monsanto Co.	Limestone, Alabama
Cuyama Phosphate Corp.	Santa Barbara, Calif.
Cominco American, Inc.	Powell, Montana
A. G. Jackson	Powell, Montana
Stauffer Chemical Co.	Silver Bow, Montana
Stauffer Chemical Co.	Rich & Uintah, Utah
Stauffer Chemical Co. of Wyoming	Lincoln, Wyoming

Table F-2 NORMAL SUPERPHOSPHATE PLANTS
Major Producers
1968

State City	SMSA	Company	Capacity, tons per year
ALABAMA			
Aliceville	--	Valley Fertilizer Co.	15,000
Bessemer	Birmingham	F.S. Royster Guano Co.	50,000
Birmingham	Birmingham	Mobil Chemical Co.	-
Cullman	--	International Minerals & Chemical Corp.	-
Decatur	--	Alabama Farmers Cooperative, Inc.	50,000
Dothan	--	The Home Guano Co.	40,000
Dothan	--	Mobil Chemical Co.	-
Florence	--	International Minerals & Chemical Corp.	-
Montgomery	Montgomery	Capital Fertilizer Co.	-
Selma	--	Centrala Farmers Cooperative, Inc.	20,000
ARKANSAS			
North Little Rock	Little Rock-N. Little Rock	Olin Mathieson Chemical Co.	-
Texarkana	Texarkana	International Minerals & Chemical Corp.	-
CALIFORNIA			
Bena	Bakersfield	AFC, Inc.	20 T/hr
Lathrop	Stockton	Best Fertilizers Co.	-
Los Angeles	Los Angeles-Long Beach	Stauffer Chemical Co.	-

Table F-2 (continued). NORMAL SUPERPHOSPHATE PLANTS
Major Producers
1968

State City	SMSA	Company	Capacity, tons per year
CALIFORNIA (cont.)			
Nichols	San Francisco-Oakland	Western States Chemical Co.	60,000
FLORIDA			
Bartow	--	W.R. Grace & Co.	-
Jacksonville	Jacksonville	Armour Agric. Chemical	-
Jacksonville	Jacksonville	Wilson & Toomer Fertilizer Co.	125,000
Nichols	--	Mobil Chemical Co.	-
Pensacola	Pensacola	Agrico Chemical Co.	-
Pierce	--	Agrico Chemical Co.	-
Tampa	Tampa-St. Petersburg	Tennessee Corp.	-
Tampa	Tampa-St. Petersburg	W.R. Grace & Co.	-
GEORGIA			
Albany	Albany	Armour Agric. Chemical	-
Albany	Albany	Swift & Co.	-
Americus	--	International Minerals & Chemical Corp.	-
Athens	--	F.S. Royster Guano Co.	75,000
Atlanta	Atlanta	Swift & Co.	-
Augusta	Augusta	Etheridge Fertilizer Co.	25,000
Columbus	Columbus	Armour Agric. Chemical	-
Cordele	--	Cotton Producers Assn.	100,000
East Point	Atlanta	International Minerals & Chem.	-
East Point	Atlanta	Tennessee Corp.	25,000
Macon	Macon	Cotton States Fertilizer Co.	40,000

Table F-2 (continued). NORMAL SUPERPHOSPHATE PLANTS
Major Producers
1968

State City	SMSA	Company	Capacity, tons per year
GEORGIA (cont.)			
Macon	Macon	F.S. Royster Guano Co.	50,000
Moultrie	--	Smith Fertilizer & Chem. Co.	100,000
Pelham	--	Pelham Phosphate Co.	60,000
Savannah	Savannah	Kaiser Agricultural Chemicals	-
Savannah	Savannah	Southern States Phosphate & Fertilizer Co.	100,000
Savannah	Savannah	Mobil Chemical Co.	-
Tifton	--	International Minerals & Chem. Corp.	-
Valdosta	--	Georgia Fertilizer Co.	75,000
ILLINOIS			
Ashkum	--	Occidental Agricultural Chemicals Corp.	-
Calumet City	Chicago	Swift & Co.	-
Chicago Heights	Chicago	Armour Agriculture Co.	-
Chicago Heights	Chicago	International Minerals & Chemical Corp.	-
E. St. Louis	St. Louis	Armour Agricultural Co.	-
E. St. Louis	St. Louis	FS Services, Inc.	60,000
E. St. Louis	St. Louis	Mobil Chemical Co.	-
Granite City	St. Louis	American Phosphate Co.	-
Morris	--	Gilchrist Plant Food Co.	-
National Stock Yards	St. Louis	Swift & Co.	-

Table F-2 (continued). NORMAL SUPERPHOSPHATE PLANTS
Major Producers
1968

State City	SMSA	Company	Capacity, tons per year
INDIANA			
Fort Wayne	Fort Wayne	Mobil Chemical Co.	-
Indianapolis	Indianapolis	F.S. Royster Guano Co.	90,000
Indianapolis	Indianapolis	Indiana Farm Bureau Cooperative Assoc., Inc.	90,000
Indianapolis	Indianapolis	International Minerals & Chemical Corp.	-
Indianapolis	Indianapolis	Smith-Douglass Div., Borden Chemical Co.	-
Jeffersonville	Louisville	Indiana Farm Bureau Cooperative Assoc., Inc.	40,000
Schererville	Chicago	Indiana Farm Bureau Cooperative Assoc., Inc.	60,000
IOWA			
Dubuque	Dubuque	Mobil Chemical Co.	-
Eagle Grove	--	Farmland Industries, Inc.	25,000
Mason City	--	International Minerals & Chemical Corp.	-
KENTUCKY			
Danville	--	Cardinal Chemical Co.	20 T/hr
London	--	Agrico Chemical Co.	-
Russellville	--	Commonwealth Fertilizer Co., Inc.	25,000
Winchester	Louisville	Cooperative Fertilizer Serv. of Richmond, Va.	20,000
LOUISIANA			
Baton Rouge	Baton Rouge	Louisiana Agricultural Supply Co., Inc.	25,000
Bunkie	--	Bunkie Phosphate Co., Inc.	15,000
Lake Charles	Lake Charles	Kelly-Weber & Co., Inc.	30,000
New Orleans	New Orleans	USS Agri-Chemicals, Inc., U.S. Steel Corp.	4 T/batch
Shreveport	Shreveport	Mobil Chemical Co.	-

Table F-2 (continued). NORMAL SUPERPHOSPHATE PLANTS
Major Producers
1968

State City	SMSA	Company	Capacity, tons per year
MAINE			
Searsport	--	W.R. Grace & Co.--Northern Chemical Industries, Inc.	-
MARYLAND			
Baltimore	Baltimore	Agrico Chemical Co.	-
Baltimore	Baltimore	Kerr-McGee Chemical Co.	-
Baltimore	Baltimore	F.S. Royster Guano Co.	100,000
MASSACHUSETTS			
Lowell	Boston	Lowell Rendering Co.	20,000
MICHIGAN			
Saginaw	Saginaw	Agrico Chemical Co.	-
Saginaw	Saginaw	Farm Bureau Services, Inc.	50,000
Saginaw	Saginaw	Smith-Douglass Div., Borden Chemical Co.	-
MINNESOTA			
Winona	--	Cenex	50,000
MISSISSIPPI			
Canton	--	Coastal Chemical Corp.	40,000
Hattiesburg	--	Coastal Chemical Corp.	40,000
Jackson	Jackson	F.S. Royster Guano Co.	50,000
Jackson	Jackson	Mobil Chemical Co.	-

Table F-2 (continued). NORMAL SUPERPHOSPHATE PLANTS
Major Producers
1968

State City	SMSA	Company	Capacity, tons per year
MISSISSIPPI (cont.)			
Marks	--	Riverside Fertilizer Co.	-
Meridian	--	Coastal Chemical Corp.	10 T/hr
New Albany	--	Coastal Chemical Corp.	40,000
MISSOURI			
Joplin	--	W.R. Grace & Co.	-
Maryland Heights	St. Louis	M.F.A. Plant Food Div., Missouri Farmers Assoc.	-
St. Joseph	St. Joseph	Farmland Industries, Inc.	-
Springfield	Springfield	M.F.A. Plant Food Div., Missouri Farmers Assoc.	-
NEW JERSEY			
Carteret	--	Agrico Chemical Co.	-
NEW YORK			
Buffalo	Buffalo	Agrico Chemical Co.	-
Buffalo	Buffalo	International Minerals & Chemical Corp.	-
NORTH CAROLINA			
Acme	--	Acme Fertilizer	50,000
Charlotte	Charlotte	F.S. Royster Guano Co.	50,000
Greensboro	Greensboro-Winston-Salem-High Point	Agrico Chemical Co.	-
Greensboro	Greensboro-Winston-Salem-High Point	Armour Agricultural Chemical	-
Greensboro	Greensboro-Winston-Salem-High Point	Swift & Co.	-

Table F-2 (continued). NORMAL SUPERPHOSPHATE PLANTS
Major Producers
1968

State City	SMSA	Company	Capacity, tons per year
NORTH CAROLINA (cont.)			
Laurinburg	--	Dixie Guano Co.	15 T/hr
Navassa	Wilmington	Armour Agricultural Chemical	-
Riegelwood	--	Kaiser Agricultural Chemicals	-
Selma	--	Mobil Chemical Co.	-
Waynesville	--	Western Carolina Phosphate Co.	30,000
Wilmington	Wilmington	Mobil Chemical Co.	-
Wilmington	Wilmington	Swift & Co.	-
Winston-Salem	Greensboro-Winston-Salem-High Point	International Minerals & Chemical Corp.	-
OHIO			
Cairo	--	Agrico Chemical Co.	-
Cincinnati	Cincinnati	Agrico Chemical Co.	-
Cincinnati	Cincinnati	Armour Agricultural Chemical	-
Cincinnati	Cincinnati	International Minerals & Chemical Corp.	-
Cincinnati	Cincinnati	Mobil Chemical Co.	-
Cincinnati	Cincinnati	Tennessee Corp.	100,000
Cleveland	Cleveland	Agrico Chemical Co.	-
Cleveland	Cleveland	Swift & Co.	-
Columbus	Columbus	Federal Chemical Co.	-
Columbus	Columbus	Smith-Douglass Div., Borden Chemical Co.	-
Dayton	Dayton	Farm Bureau Cooperative Fertilizer Assoc., Inc.	20 T/hr
Toledo	Toledo	F.S. Royster Guano Co.	100,000
Washington Court House	--	Agrico Chemical Co.	-

Table F-2 (continued). NORMAL SUPERPHOSPHATE PLANTS
Major Producers
1968

State City	SMSA	Company	Capacity, tons per year
PENNSYLVANIA			
Philadelphia	Philadelphia	Kerr-McGee Chemical Co.	-
SOUTH CAROLINA			
Anderson	--	Anderson Fertilizer Co., Inc.	50,000
Charleston	Charleston	Agrico Chemical Co.	-
Charleston	Charleston	F.S. Royster Guano Co.	40,000
Charleston	Charleston	Mobil Chemical Co.	-
Charleston	Charleston	Planters Fertilizer & Phosphate Co.	100,000
Hartsville	--	International Minerals & Chemical Corp.	-
Spartanburg	--	International Minerals & Chemical Corp.	-
TENNESSEE			
Knoxville	Knoxville	Agrico Chemical Co.	-
La Vergne	--	Tennessee Farmers Cooperative	30,000
Memphis	Memphis	Mobil Chemical Co.	-
Mt. Pleasant	--	Mobil Chemical Co.	-
Nashville	Nashville	Armour Agricultural Chemical	-
Nashville	Nashville	Federal Chemical Co.	-
Tenco	Knoxville	Tennessee Farmers Cooperative	30,000
TEXAS			
Comanche	--	Central Texas Fertilizer Co.	15,000
El Paso	El Paso	W.R. Grace & Co.	-
Fort Worth	Fort Worth	International Minerals & Chemical Corp.	-
Galena Park	Houston	American Plant Food Corp.	-

Table F-2 (continued). NORMAL SUPERPHOSPHATE PLANTS
Major Producers
1968

State City	SMSA	Company	Capacity, tons per year
TEXAS (cont.)			
Greenville	--	International Minerals & Chemical Corp.	-
Littlefield	--	Caprock Fertilizer Co.	30,000
Littlefield	--	Nipak	30,000
Pasadena	Houston	Olin Mathieson Chemical Co.	-
Plainview	--	Best Fertilizers Co.	-
UTAH			
Midvale	Salt Lake City	Mineral Fertilizer Co.	25,000
VIRGINIA			
Chesapeake	Norfolk-Portsmouth	F.S. Royster Guano Co.	100,000
Norfolk	Norfolk-Portsmouth	Farmers Guano Co.	-
Norfolk	Norfolk-Portsmouth	Smith-Douglass Div., Borden Chemical Co.	60,000
Norfolk	Norfolk-Portsmouth	W.R. Grace & Co.	-
Richmond	Richmond	Mobil Chemical Co.	-
Richmond	Richmond	Richmond Guano Co.	60,000
South Norfolk	Norfolk-Portsmouth	Swift & Co.	20 T/hr
WASHINGTON			
Tacoma	Tacoma	Stauffer Chemical Co.	-
WISCONSIN			
Green Bay	Green Bay	Northwest Cooperative Mills	30,000
Madison	Madison	F.S. Royster Guano Co.	80,000
Prairie DuChien	--	F.S. Services, Inc., Wisconsin Div.	120,000

Table F-3 TRIPLE SUPERPHOSPHATE PLANTS
June 1968

State City	SMSA	Company	Capacity Tons Per Year
CALIFORNIA			
Bena	Bakersfield	AFC, Inc.	170,000
FLORIDA			
Agricola	--	Swift and Co.	170,000
Bartow	--	Davison Chemical (W. R. Grace)	450,000
Bartow	--	International Minerals & Chemical	450,000
Brewster	--	American Cyanamid	380,000
Bartow & Fort Meade	--	USS Chemicals, U.S. Steel Corp.	600,000
Green Bay	--	Farmland Industries	80,000
Mulberry	--	F. S. Royster Guano	110,000
Nichols	--	Mobil Chemical	400,000
Piney Point	--	Bordon Chemical	180,000
Plant City	Tampa-St. Petersburg	Central Phosphates	--
South Pierce	--	Agrico Chemical (Conoco)	500,000
Tampa	Tampa-St. Petersburg	U.S. Phosphoric Products (Cities Service)	850,000
White Springs	--	Occidental Agricultural	200,000
IDAHO			
Georgetown	--	Central Farmers Fertilizers	200,000
Idaho Falls	--	J. R. Simplot Co.	--
Pocatello	--	J. R. Simplot Co.	360,000
MARYLAND			
Baltimore	Baltimore	Kerr-McGee Chemical	--

Table F-3 (continued). TRIPLE SUPERPHOSPHATE PLANTS
June 1968

State City	SMSA	Company	Capacity Tons Per Year
MISSISSIPPI			
Pascagoula	--	Coastal Chemical	300,000
MISSOURI			
Joplin	--	Davison Chemical (W. R. Grace)	35,000
NORTH CAROLINA			
Aurora	--	Texas Gulf Sulphur	300,000
UTAH			
Garfield	Salt Lake City	Western Phosphates (Stauffer)	75,000

Table F-4 AMMONIUM PHOSPHATE FERTILIZER PLANTS (SOLID)
1968

State City	SMSA	Company	Capacity, tons per year
ALABAMA			
Cherokee	--	USS Agri-Chemicals, Inc., U.S. Steel Corp.	180,000
Midland City	--	United Chemical Corp.	240,000
Muscle Shoals	--	Tennessee Valley Authority	27,000
ARIZONA			
Phoenix	Phoenix	Arizona Agrochemical	-
ARKANSAS			
Helena	--	Arkla Chemical	290,000
CALIFORNIA			
Bena	Bakersfield	Agricultural Fert. Chem.	90,000
Dominguez	Los Angeles-Long Beach	Western States Chemical	50,000
Fontana	San Bernardino-Riverside-Ontario	Kaiser Steel	28,000
Helm	Fresno	Valley Nitrogen Producers	100,000
Lathrop	Stockton	Best Fertilizers (Occidental)	-
Pittsburg	San Francisco-Oakland	Shell Chemical	10,000
FLORIDA			
Bartow	--	W.R. Grace & Co.	200,000
Bartow	--	USS Agri-Chemicals, Inc., U.S. Steel Corp.	-
Bonnie	--	International Minerals & Chemicals	350,000
Brewster	--	American Cyanamid	200,000
East Tampa	Tampa-St. Petersburg	U.S. Phosphoric Products	225,000

Table F-4 (continued). AMMONIUM PHOSPHATE FERTILIZER PLANTS (SOLID)
1968

State City	SMSA	Company	Capacity, tons per year
FLORIDA (cont.)			
Green Bay	--	Farmland Industries	200,000
Mulberry	--	F.S. Royster Guano Co.	90,000
Nichols	--	Mobil Chemical Co.	100,000
Piney Point	--	Borden Chemical Co.	185,000
Plant City	Tampa-St. Petersburg	Central Phosphates	250,000
South Pierce	--	Agrico Chemical Co. (Conoco)	250,000
White Springs	--	Occidental Agricultural	250,000
COLORADO			
Pueblo	Pueblo	Colorado Fuel and Iron	15,000
IDAHO			
Kellogg	--	Bunker Hill	-
Kellogg	--	Victor Chemical	70,000
Pocatello	--	J.R. Simplot	200,000
ILLINOIS			
Chicago Heights	Chicago	Victor Chemical	-
Danville	--	U.S. Industrial Chemicals	-
Depue	--	New Jersey Zinc	270,000
Henry	--	W.R. Grace & Co.	100,000
Joliet	Chicago	Olin Mathieson Chemical	200,000
Marseilles	--	National Phosphate	150,000
Streater	--	Smith-Douglas Div., Borden Chemical Co.	-

Table F-4 (continued). AMMONIUM PHOSPHATE FERTILIZER PLANTS (SOLID)

1968

State City	SMSA	Company	Capacity, tons per year
IOWA			
Dubuque	Dubuque	Olin Mathieson Chemical	-
Fort Madison	--	Chevron Chemical	-
LOUISIANA			
Donaldsonville	--	Gulf Oil	-
Hahnville	--	National Phosphate	350,000
Harvey	New Orleans	Swift & Co.	150,000
Luling	--	Monsanto	240,000
MICHIGAN			
Dearborn	Detroit	Ford Motor Co.	14,000
MINNESOTA			
Pine Bend	Minneapolis-St. Paul	Northwest Co-op. Mills	100,000
MISSISSIPPI			
Pascagoula	--	Coastal Chemical	180,000
MISSOURI			
Joplin	--	Farmers Chemical	70,000
Joplin	--	W.R. Grace & Co.	-
NORTH CAROLINA			
Aurora	--	Texas Gulf Sulphur	250,000
OKLAHOMA			
Tulsa	Tulsa	Nipak, Inc.	75,000
TEXAS			
Houston	Houston	Phosphate Chemicals	150,000
Kerens	--	Nipak, Inc.	100,000

Table F-4 (continued). AMMONIUM PHOSPHATE FERTILIZER PLANTS (SOLID)
1968

State City	SMSA	Company	Capacity, tons per year
TEXAS (cont.)			
Pasadena	Houston	Olin Mathieson Chemical	600,000
Plainview	--	Best Fertilizers (Occidental)	-
Texas City	Galveston-Texas City	Smith-Douglass Div., Borden Chemical Co.	-
UTAH			
Garfield	Salt Lake City	Western Phosphates	-
WASHINGTON			
Kennewick	--	Chevron Chemical	-

Table F-5 FERTILIZER GRANULATION PLANTS
December 1967

State City	SMSA	Company	Capacity, Tons per Year
ALABAMA			
Bessemer	Birmingham	F. A. Royster Guano Co.	50,000
Birmingham	Birmingham	V-C Chemical Co. (Mobil)	-
Columbia	--	Gulf Oil Co.	-
Decatur	--	Ala. Farmers Co-op, Inc.	50,000
Decatur	--	Coastal Chemical Corp.	40,000
Dothan	--	V-C Chemical Co. (Mobil)	-
Florence	--	International Minerals & Chem.	-
Forkland	--	Centrala Farmers Co-op	50,000
Hanceville	--	The Cotton Producers Assn.	50,000
Montgomery	Montgomery	Capital Fertilizer Co.	25,000
Montgomery	Montgomery	V-C Chemical Co. (Mobil)	-
Montgomery	Montgomery	Tennessee Corp.	40,000
Montgomery	Montgomery	F. S. Royster Guano Co.	-
Sheffield	--	Tennessee Farmers Co-op	-
ARKANSAS			
Little Rock	Little Rock-North Little Rock	Southern Cotton Oil Div.	-
Texarkana	Texarkana	International Minerals & Chem. Corp.	-
Walnut Ridge	--	Ark-Mo Plant Food Co.	100,000
CALIFORNIA			
Antioch	San Francisco-Oakland	Kerley Chem. Corp.	100,000
Blythe	San Bernardino-Riverside-Ontario	The Arical Co., Inc.	-
Compton	Los Angeles-Long Beach	Dominguez Fertilizers, Inc.	50,000

Table F-5 (continued). FERTILIZER GRANULATION PLANTS
December 1967

State City	SMSA	Company	Capacity Tons per Year
CALIFORNIA (cont.)			
Edison	Bakersfield	AFC, Inc.	100,000
Fresno	Fresno	Niagara Chem. Div. (FMC)	-
Lathrop	Stockton	Occidental Chemical Co.	90,000
Los Angeles	Los Angeles-Long Beach	Stauffer Chem. Co.	-
Los Angeles	Los Angeles-Long Beach	Swift & Co.	-
Los Angeles	Los Angeles-Long Beach	Wilbur-Ellis Co.	25,000
Nichols	San Francisco-Oakland	Western States Chem. Corp.	60,000
Richmond	San Francisco-Oakland	Stauffer Chem. Co.	50,000
Santa Rosa	--	Fersolin Corp.	8,000
COLORADO			
Denver	Denver	Bennett Chem. Co.	10,000
Longmont	Denver	Farm Chemical Co.	150,000
CONNECTICUT			
Waterbury	Waterbury	Kerr-McGee Chemical Co.	-
DELAWARE			
Wilmington	Wilmington	Agway, Inc., Fertilizer Div.	25,000
FLORIDA			
Bartow	--	Farmland Industries, Inc.	-
Cottondale	--	Cartledge Fertilizer Co.	50,000
Fort Pierce	--	Briggs Fertilizer Co.	-
Fort Pierce	--	W. R. Grace & Co.	-
Jacksonville	Jacksonville	USS Agri-Chemicals, Inc., Div. U.S. Steel Corp.	-
Jacksonville	Jacksonville	Wilson & Toomer Fertilizer Co.	125,000
Mulberry	--	International Minerals & Chemical	-

Table F-5 (continued). FERTILIZER GRANULATION PLANTS
December 1967

State City	SMSA	Company	Capacity, Tons per Year
FLORIDA (cont.)			
Pensacola	Pensacola	Agrico Chemical Co.	-
Pensacola	Pensacola	Merchants Fertilizer Co.	30,000
Pensacola	Pensacola	Kerr-McGee Chemical Corp.	-
Piney Point	--	The Borden Chemical Co.	-
Tampa	Tampa-St. Petersburg	Earl Harrell's Fertilizer Co.	-
Winter Haven	--	Swift & Co.	-
GEORGIA			
Albany	Albany	USS Agri-Chemicals, Inc., Div. U.S. Steel Corp.	-
Albany	Albany	Swift & Co.	-
Albany	Albany	V-C Chemical Co. (Mobil)	-
Americus	--	International Minerals & Chem. Corp.	-
Athens	--	F. S. Royster Guano Co.	-
Augusta	Augusta	International Minerals & Chem. Corp.	-
Cordele	--	The Cotton Producers Assn.	100,000
Doerun	--	Toney Brothers	-
Macon	Macon	F. S. Royster Guano Co.	-
Moultrie	--	C. O. Smith Fertilizer & Chemical Co.	100,000
Pelham	--	Pelham Phosphate Co.	60,000
Rome	--	V-C Chemical Co. (Mobil)	
Savannah	Savannah	Southern Fertilizer & Chemical Co.	150,000
Savannah	Savannah	V-C Chemical Co. (Mobil)	-
Tifton	--	Kerr-McGee Chemical Corp.	30,000
IDAHO			
Conda	--	El Paso Prod. Co.	125,000

Table F-5 (continued). FERTILIZER GRANULATION PLANTS
December 1967

State City	SMSA	Company	Capacity, Tons per Year
IDAHO (cont.)			
Pocatello	--	J. R. Simplot Co.	300,000
ILLINOIS			
Allertown	--	Allerton Supply Co.	15,000
Atlanta	--	Diamond Alkali Co.	-
Calumet City	Chicago	Swift & Co.	-
Chicago	Chicago	American Fertilizer Co.	-
Chicago	Chicago	Gillette Inhibitor Co., Inc.	6,000
Chicago Heights	Chicago	USS Agri-Chemicals, Inc., Div. U.S. Steel Corp.	-
Chicago Heights	Chicago	International Minerals & Chem. Corp.	-
Danville	--	Amer. Agric. Chem. Co. (Conoco)	-
Danville	--	U.S.I. Farm Chemicals	-
Decatur	Decatur	Perkinson Co.	20,000
Depue	--	New Jersey Zinc Co.	-
East St. Louis	St. Louis	USS Agri-Chemicals, Inc., Div. U.S. Steel Corp.	-
East St. Louis	St. Louis	Agrico Chem. Co. (Conoco)	-
East St. Louis	St. Louis	Darling & Co.	-
East St. Louis	St. Louis	V-C Chemical Co. (Mobil)	-
Effingham	--	Effingham Equity, Inc.	60,000
Fulton	--	Amer. Agric. Chem. Co.	-
Henry	--	W. R. Grace & Co.	-
Meredosia	--	A. B. Chrisman Fertilizer Co., Inc.	12,000
Morris	--	Gilchrist Plant Food Co.	-
National Stock Yards	St. Louis	Swift & Co.	-
Ridgway	--	Wabash Valley Service Co.	-
Swan Creek	--	Sands Elevator	-

Table F-5 (continued). FERTILIZER GRANULATION PLANTS
December 1967

State City	SMSA	Company	Capacity, Tons per Year
INDIANA			
Bryant	--	Occidental Chemicals Co.	25 tons/hr
Columbia City	--	Ind. Farm Bureau Co-op	40,000
Fairmount	--	Occidental Chemicals Co.	30 tons/hr
Fort Wayne	Fort Wayne	V-C Chemical Co. (Mobil)	-
Fulton	--	Occidental Agricultural Chemicals	20 tons/hr
Indianapolis	Indianapolis	Borden Chemical Co. - Smith-Douglass	-
Indianapolis	Indianapolis	International Minerals & Chem. Corp.	-
Indianapolis	Indianapolis	F. S. Royster Guano Co.	-
Jasonville	--	V-C Chemical Co. (Mobil)	-
Jeffersonville	Louisville	USS Agri-Chemicals, Inc., Div. U.S. Steel Corp.	-
Jeffersonville	Louisville	Ind. Farm Bureau Co-op Assn., Inc.	40,000
New Albany	Louisville	W. R. Grace & Co.	-
New Albany	Louisville	Tennessee Corp.	-
Peru	--	Federal Fertilizer Sales Corp.	35,000
Remington	--	V-C Chemical Co. (Mobil)	-
Rushville	--	Gulf Oil Corp. Chemicals	-
Rushville	--	Kerr-McGee Chemical Corp.	-
Seymour	--	Amer. Agric. Chem. Co. (Conoco)	-
Vincennes	--	Federal Fertilizer Sales Corp.	-
IOWA			
Alleman	Des Moines	Farmland Industries, Inc.	-
Auburn	--	Brincks Farm Supply	100 tons/hr
Des Moines	Des Moines	FS Services, Inc.	90,000
Des Moines	Des Moines	National Fertilizer Co.	15,000
Des Moines	Des Moines	Ross Daniels, Inc.	-

Table F-5 (continued). FERTILIZER GRANULATION PLANTS
December 1967

State City	SMSA	Company	Capacity, Tons per Year
IOWA (cont.)			
Dike	--	Allied Chemical Corp.	-
Dubuque	Dubuque	V-C Chemical Co. (Mobil)	-
Eagle Grove	--	Farmland Industries, Inc.	25,000
Estherville	--	V-C Chemical Co. (Mobil)	-
Ft. Madison	--	Chevron Chemical Co.	-
Humboldt	--	Amer. Agric. Chem. Co. (Conoco)	-
Mason City	--	International Minerals & Chem. Corp.	-
Mason City	--	Swift & Co.	-
Ottumwa	--	Super-Crop Plant Foods, Inc.	-
Ottumwa	--	H. D. Sales, Inc.	-
Perry	--	W. R. Grace & Co.	-
Pleasantville	--	Farm & Town Industries	-
Spirit Lake	--	Farmers Elevator Co.	-
Spencer	--	American Cyanamid Co.	-
Zearing	--	Zearing Fertilizer Co.	-
KANSAS			
Chanute	--	Mobil Chemical Co.	-
Downs	--	Huiting & Cary Fertilizer Service	-
Kansas City	Kansas City	Gulf Oil Corp.	-
Manhattan	--	Farmland Industries, Inc.	20 tons/hr
Marysville	--	Burger Fertilizer Co.	15,000
Olathe	Kansas City	Amer. Agric. Chem. Co. (Conoco)	-
Wankeeney	--	Turman Chemical Co.	-
KENTUCKY			
Cecilia	--	Gulf Oil Corp.	-

Table F-5 (continued). FERTILIZER GRANULATION PLANTS
December 1967

State City	SMSA	Company	Capacity, Tons per Year
KENTUCKY (cont.)			
Henderson	Evansville	Gulf Oil Corp.	-
Lexington	Lexington	Burley Belt Fertilizer Co.	35,000
London	--	Burley Belt Chemical Co.	20 tons/hr
Louisville	Louisville	North American Fertilizer Co.	45,000
Louisville	Louisville	F. S. Royster Guano Co.	-
Maysville	--	Ohio Valley Fertilizer, Inc.	20,000
Russelville	--	Southern States Co-op, Inc.	-
Shelbyville	--	Gro-Green Chem. Co., Inc.	-
LOUISIANA			
Arcadia	--	Ruston Oil Mill & Fertilizer Co.	10 tons/hr
Baton Rouge	Baton Rouge	Louisiana Ag. Supply Co., Inc.	25,000
Bunkie	--	Guaranty Seed Co., Inc.	10,000
Harvey	New Orleans	Swift & Co.	-
Jonesville	--	Brown Brothers	-
Lake Charles	Lake Charles	Kelly Weber & Co., Inc.	30,000
New Orleans	New Orleans	USS Agri-Chemicals, Inc., Div. U.S. Steel Corp.	-
Ruston	--	Ruston Oil Mill & Fertilizer Co.	-
Shreveport	Shreveport	V-C Chemical Co. (Mobil)	-
MAINE			
Caribou	--	Aroostook Federation of Farmers	25,000
Detroit	--	Agway, Inc.	25,000
Fort Kent	--	Aroostook Federation of Farmers	20,000
Greene	--	Fedco Farm Service	-
Presque Isle	--	Brockville Chemical Co.	16,000

Table F-5 (continued). FERTILIZER GRANULATION PLANTS
December 1967

State City	SMSA	Company	Capacity, Tons per Year
MAINE (cont.)			
Sandy Point	--	The Summers Fertilizer Co., Inc. (Corenco Corp.)	50,000
MARYLAND			
Baltimore	Baltimore	Amer. Agric. Chem. Co.	-
Baltimore	Baltimore	Mobil Chemical Co.	-
Baltimore	Baltimore	USS Agri-Chemicals, Inc., Div. U.S. Steel Corp.	-
Baltimore	Baltimore	Lebanon Chemical Corp.	-
Baltimore	Baltimore	F. S. Royster Guano Co.	-
Baltimore	Baltimore	Swift & Co.	-
Baltimore	Baltimore	Southern States Co-op	80,000
Cambridge	--	Kerr-McGee Chemical Corp.	-
Hagerstown	--	Central Chem. Corp.	-
Landover	Washington, D. C.	F. W. Bolgiano & Co.	10,000
Salisbury	--	W. B. Tilghman Co., Inc.	20,000
Whiteford	--	Miller Chem. & Fertilizer Corp.	15,000
MASSACHUSETTS			
Cambridge	Boston	Agway, Inc.	50,000
MICHIGAN			
Kalamazoo	Kalamazoo	Farm Bureau Services, Inc.	40,000
Lansing	Lansing	W. R. Grace & Co.	-
Marshall	--	Spieldenner Fertilizer Co.	-
Niles	--	Michiana Chem. Co.	30,000
Owosso	--	USS Agri-Chemicals, Inc., Div. U.S. Steel Corp.	-
Riga	--	Anderson Fertilizers	30 tons/hr
Riga	--	The Borden Chemical Co.	-

Table F-5 (continued). FERTILIZER GRANULATION PLANTS
December 1967

State City	SMSA	Company	Capacity, Tons per Year
MICHIGAN (cont.)			
Saginaw	Saginaw	Amer. Ag. Chem. Co.	-
Saginaw	Saginaw	Farm Bureau Services, Inc.	50,000
Saginaw	Saginaw	The Borden Chemical Co. (Smith-Douglass Div.)	-
MINNESOTA			
East Grand Forks	--	Northland Chem. Co., Inc.	10,000
Fergus Falls	--	Occidental Chemicals Corp.	60 tons/hr
Little Falls	--	Creamery Blending Inc.	-
Madison	--	Fieldcrest Fertilizer Co.	15,000
Minneapolis	Minneapolis-St. Paul	Howe, Inc.	30,000
Minneapolis	Minneapolis-St. Paul	Land O' Lakes Creameries, Inc.	50,000
Rochester	--	Rochester Fertilizer Co.	15 tons/hr
St. Paul	Minneapolis-St. Paul	Minnesota Farm Bureau Service Co.	60,000
South St. Paul	Minneapolis-St. Paul	Cenex, Inc.	-
Walnut Grove	--	American Cyanamid Co.	-
Winona	--	USS Agri-Chemicals, Inc., Div. U.S. Steel Corp.	-
Winona	--	Cenex, Inc.	-
MISSISSIPPI			
Jackson	Jackson	Delta Cotton Oil & Fertilizer Co.	25,000
Jackson	Jackson	F. S. Royster Guano Co.	-
Jackson	Jackson	V-C Chemical Co. (Mobil)	-
Meridan	--	Coastal Chemical Corp. Plant #1	-
Meridan	--	Coastal Chemical Corp. Plant #2	10 tons/hr
Tupelo	--	International Minerals & Chemical	-

Table F-5 (continued). FERTILIZER GRANULATION PLANTS
December 1967

State City	SMSA	Company	Capacity, Tons per Year
MISSOURI			
Edina	--	Northeast Mo. Co-op Swervices	-
Sikeston	--	Gulf Oil Corp.	-
South St. Joseph	St. Joseph	Farmland Industries, Inc.	25,000
Westboro	--	Herrick Feed & Produce	10 tons/hr
NEBRASKA			
Broken Bow	--	Co-op Marketing Assn.	-
Cozad	--	Cozad Elevator Inc.	20 tons/hr
Fairbury	--	National Fertilizer Co.	25,000
Grand Island	--	Gulf Oil Corp.	25,000
Harvard	--	Farmers Union Co-op Elevator	-
Holbrook	--	Holbrook Non-Stock Co-op Co.	-
Omaha	Omaha	Federal Chemical Co.	-
South Omaha	Omaha	Federal Chemical Co.	-
NEW JERSEY			
Carteret	--	Amer. Ag. Chem. Co. (Conoco)	-
Windsor	Trenton	USS Agri-Chemicals, Inc., Div. U.S. Steel Corp.	-
NEW YORK			
Albany	Albany-Schenectady-Troy	Agway, Inc.	50,000
Big Flats	--	Agway, Inc.	50,000
Buffalo	Buffalo	Amer. Ag. Chem. Co. (Conoco)	-
Buffalo	Buffalo	Inter. Minerals & Chem. Corp.	-
Lyons	Rochester	Agway, Inc.	50,000
Lyons	Rochester	F. S. Royster Guano Co.	-
Newark	Rochester	Kerr-McGee Chemical Corp.	-

Table F-5 (continued). FERTILIZER GRANULATION PLANTS
December 1967

State City	SMSA	Company	Capacity, Tons per Year
NEW YORK (cont.)			
Riverhead	New York	Long Island Produce Co.	30,000
NORTH CAROLINA			
Acme	--	Acme Fertilizer Co.	40,000
Charlotte	Charlotte	F. S. Royster Guano Co.	-
Greensboro	Greensboro-Winston-Salem-High Point	Amer. Ag. Chem. Co.	-
Greensboro	Greensboro-Winston-Salem-High Point	USS Agri-Chemical, Inc., Div. U.S. Steel Corp.	-
Greensboro	Greensboro-Winston-Salem-High Point	Swift & Co.	-
Kinston	--	Borden Chemical Co., Smith-Douglass Div.	60,000
Lumberton	--	FCX, Inc.	-
Laurinburg	--	Dixie Guano Co.	-
Selma	--	V-C Chemical Co. (Mobil)	-
Statesville	--	W. R. Grace & Co.	-
Wilmington	Wilmington	USS Agri-Chemical, Inc., Div. U.S. Steel Corp.	-
Wilmington	Wilmington	Swift & Co.	-
Wilmington	Wilmington	Borden Chemical Co., Smith-Douglass Div.	-
Wilmington	Wilmington	V-C Chemical Co. (Mobil)	-
Wilmington	Wilmington	W. R. Grace & Co.	-
Wilmington	Wilmington	F. W. Royster Guano Co.	-
Winston-Salem	Greensboro-Winston-Salem-High Point	International Minerals	-
OHIO			
Alliance	Canton	W. R. Grace & Co.	-
Andover	--	Central Chem. Corp. of Ohio	6,000
Bradner	Toledo	F. S. Royster Guano	-
Cairo	--	Amer. Ag. Chem. Co.	-
Chillicothe	--	Scioto Farm Chem., Inc.	10,000

Table F-5 (continued). FERTILIZER GRANULATION PLANTS
December 1967

State City	SMSA	Company	Capacity, Tons per Year
OHIO (cont.)			
Cincinnati	Cincinnati	USS Agri-Chemical, Inc., Div. U.S. Steel Corp.	-
Cincinnati	Cincinnati	Internat. Minerals & Chem. Corp.	-
Cincinnati	Cincinnati	V-C Chemical Co. (Mobil)	-
Cleveland	Cleveland	Amer. Ag. Chem. Co.	-
Cleveland	Cleveland	The Stadler Fertilizer Co.	50,000
Columbus	Columbus	Federal Chemical Co.	-
Columbus	Columbus	W. R. Grace & Co.	-
Columbus	Columbus	Smith-Douglass Co., Inc. (Borden Chemical)	-
Dayton	Dayton	Landmark Farm Bureau Co-op	20 tons/hr
Findlay	--	W. R. Grace & Co.	-
Fostoria	--	Kerr-McGee Chemical Corp.	-
Greenville	--	Swift & Co.	-
Lima	Lima	Mobil Chemical	-
Marion	--	Marion Plant Life Fertilizer Co.	50,000
Marysville	--	Scott Chem. Plant, Inc.	15,000
Mount Gilead	--	Landmark Farm Bureau Co-op	-
Napoleon	--	Midwest Plant Food, Inc.	20,000
New Bremen	--	Occidental Chemical Co.	15,000
Orrville	--	V-C Chemical Co. (Mobil)	-
Piqua	Dayton	F. S. Royster Co.	-
St. Paris	--	Occidental Chemicals Co.	20,000
Smithville	--	Tyler Grain & Fertilizer Co.	20 tons/hr
Toledo	Toledo	F. S. Royster Co.	-
Washington Court House	--	Amer. Ag. Chem. Co.	-

Table F-5 (continued). FERTILIZER GRANULATION PLANTS
December 1967

State City	SMSA	Company	Capacity, Tons per Year
OKLAHOMA			
Muskogee	--	Farmland Industries, Inc.	30,000
Oklahoma City	Oklahoma City	American Cyanamid Co.	-
Tulsa	Tulsa	Nipak, Inc.	75,000
PENNSYLVANIA			
Allentown	Allentown-Bethlehem-Easton	Robert A. Reichard, Inc.	20,000
Hanover	York	Miller Chem. & Fertilizer Corp.	15,000
Kittanning	--	Agway, Inc.	40,000
Lebanon	--	Lebanon Chem. Corp.	-
Philadelphia	*Philadelphia*	Kerr-McGee Chemical Co.	-
York	York	Agway, Inc.	50,000
SOUTH CAROLINA			
Blackville	--	Brown Fertilizer Co., Inc.	8,000
Charleston	Charleston	*Amer. Ag. Chemical Co. (Conoco)*	-
Charleston	Charleston	W. R. Grace & Co.	-
Charleston	Charleston	Planters Fertilizer & Phosphate Co.	100,000
Charleston	Charleston	F. S. Royster Guano Co.	-
Charleston	Charleston	V-C Chemical Co. (Mobil)	-
Florence	--	F. S. Royster Guano	-
Greenville	Greenville	V-C Chemical Co. (Mobil)	-
Hartsville	--	Internat. Minerals & Chem. Corp.	-
Jericho	Charleston	Kerr-McGee Chemical Corp.	100,000
Spartanburg	--	Internat. Minerals & Chem. Corp.	-
SOUTH DAKOTA			
Alexandria	--	Farmers Union Oil Co.	-
Howard	--	Peavey Co., Producer Service	-

Table F-5 (continued). FERTILIZER GRANULATION PLANTS
December 1967

State City	SMSA	Company	Capacity, Tons per Year
TENNESSEE			
Chattanooga	Chattanooga	A. D. Adair & McCarty Bros., Inc.	30,000
Humboldt	--	Federal Chemical Co.	-
Memphis	Memphis	USS Agri-Chemical, Inc., Div. U.S. Steel Corp.	-
Memphis	Memphis	V-C Chemical Co. (Mobil)	-
Mt. Pleasant	--	V-C Chemical Co. (Mobil)	-
Nashville	Nashville	USS Agri-Chemical, Inc., Div. U.S. Steel Corp.	-
Nashville	Nashville	Federal Chem. Co., Inc.	-
Nashville	Nashville	W. R. Grace & Co.	-
TEXAS			
Bonham	--	Hi-Yield Fertilizer Co.	40,000
Bonham	--	The Fertilome People	-
Comanche	--	Central Texas Fertilizer Co., Inc.	15,000
Dalhart	--	J. Eddie Jones Fertilizer Co.	-
Dallas	Dallas	USS Agri-Chemical, Inc., Div. U.S. Steel Corp.	-
Dallas	Dallas	Dallas Laboratories	-
Dallas	Dallas	Southwest Fertilizer Co.	3,000
Fort Worth	Fort Worth	Inter. Min. & Chem., Inc.	-
Freeport	Houston	Red Barn Chem., Inc.	90,000
Houston	Houston	USS Agri-Chemical, Inc., Div. U.S. Steel Corp.	-
Houston	Houston	Swift & Co.	-
Jacksonville	--	Jacksonville Fertilizer Co.	15,000
Keller	Fort Worth	Tacco Co.	10,000
Littlefield	--	Nipak, Inc.	30,000
Nacogdoches	--	Texas Farm Products Co.	75,000
Pasadena	Houston	Olin Mathieson Chem. Corp.	-

Table F-5 (continued). FERTILIZER GRANULATION PLANTS
December 1967

State City	SMSA	Company	Capacity, Tons per Year
TEXAS (cont.)			
Pittsburg	--	Nipak, Inc.	-
Plainview	--	The Best Fertilizer Co. of Texas	-
Sulphur Springs	--	Southern Farm Supply Assn.	50,000
Sulphur Springs	--	Coastal Chemical Corp.	-
Texarkana	Texarkana	Farmers Fertilizer Co.	20 tons/hr
Texarkana	Texarkana	International Minerals & Chemicals	-
Texas City	Galveston-Texas City	Smith-Douglass Co., Inc.	-
Tyler	Tyler	East Texas Products Co.	-
UTAH			
Midvale	Salt Lake City	Mineral Fertilizer Co.	25,000
VERMONT			
Bradford	--	Kerr-McGee Chemical Corp.	-
VIRGINIA			
Alexandria	Washington, D. C.	Herbert Bryant, Inc.	-
Chesapeake	Norfolk-Portsmouth	W. R. Grace & Co.	-
Chesapeake	Norfolk-Portsmouth	Reliance Fertilizer & Lime Corp.	25,000
Chesapeake	Norfolk-Portsmouth	F. S. Royster Guano Co.	-
Chesapeake	Norfolk Portsmouth	Southern States Co-op	80,000
Chilhowie	--	The Vance Co., Inc.	20,000
Norfolk	Norfolk-Portsmouth	Chas. W. Priddy & Co., Inc.	65,000
Norfolk	Norfolk-Portsmouth	Smith-Douglass Co., Inc.	-
Norfolk	Norfolk-Portsmouth	Weaver Fertilizer Co., Inc.	60,000
Norfolk	Norfolk-Portsmouth	Swift & Co.	-
Richmond	Richmond	Richmond Guano Co.	60,000

Table F-5 (continued). FERTILIZER GRANULATION PLANTS
December 1967

State City	SMSA	Company	Capacity, Tons per year
VIRGINIA (cont.)			
Richmond	Richmond	V-C Chemical Co. (Mobil)	-
Suffolk	--	V-C Chemical Co. (Mobil)	-
WASHINGTON			
Burbank	--	G-W Chemco, Inc.	20,000
Pasco	--	G-W Chemco, Inc.	-
WISCONSIN			
Cumberland	--	Cumberland Farmers Union Co-op	-
Green Bay	Green Bay	Northwest Co-op Mills	-
Green Bay	Green Bay	F. S. Services Inc.	25,000
Hillsboro	--	Midwestern Farm Fertilizers	20,000
Junea	--	Western Dodge Co. Co-op	-
Kenosha	Kenosha	The N. S. Koos & Sons Co.	60,000
Madison	Madison	Swift & Co.	-
Madison	Madison	F. S. Royster Guano Co.	-
Marshall	Madison	Dairyland Fertilizers, Inc.	30,000
Prairie Du Chien	--	Wisconsin Farmco Service Co-op	120,000
Stevens Point	--	Midwestern Farm Fertilizers, Inc.	30,000
Whitewater	--	Federal Chemical Co.	-
WYOMING			
Glenrock	--	American Humates, Inc.	10,000
Worland	--	Wyoming Pure Seed Growers, Inc.	-

Table F-6 PHOSPHORIC ACID PLANTS (Wet Process)
June 1968

State City	SMSA	Company	Capacity, P_2O_5 Tons per Year
ARKANSAS			
Helena	--	Arkla Chemical Corp.	-
CALIFORNIA			
Bena	Bakersfield	AFC, Inc.	20,000
Dominguez	Los Angeles-Long Beach	Western States Corp.	12,000
Helm	Fresno	Valley Nitrogen Products, Inc.	49,000
Lathrop	Stockton	The Best Fertilizers Corporation	18,000
Trona	San Bernardino-Riverside-Ontario	American Potash & Chemical Corp.	5,000
DELAWARE			
North Claymont	Wilmington	Allied Chemical Corp.	33,000
FLORIDA			
Bonnie	--	International Minerals & Chemical Corp., Agricultural Operations Div.	500,000
Bartow	--	USS Agri-Chemicals, Inc., U.S. Steel Corp.	275,000
Bartow	--	W. R. Grace and Co., Agricultural Products Div.	165,000
Bartow	--	Swift and Co., Phosphate Center	90,000
Brewster	--	American Cyanamid Co., Agricultural Div.	200,000
Fort Meade	--	USS Agri-Chemical, Inc., U.S. Steel Corp.	165,000
Green Bay	--	Farmland Industries	110,000
Hamilton	Fort Lauderdale-Hollywood	Occidental Petroleum Co.	550,000
Mulberry	--	F. S. Royster Guano Co.	25,000
Nichols	--	Mobil Chemical Co., Div. Mobil Oil Corp.	230,000

Table F-6 (continued). PHOSPHORIC ACID PLANTS (Wet Process)
June 1968

State City	SMSA	Company	Capacity, P_2O_5 Tons per Year
FLORIDA (cont.)			
Pierce	--	Consumers Cooperative Association	75,000-100,000
Piney Point	--	Borden Chemical Co., Smith Douglass Div.	140,000
Plant City	Tampa-St. Petersburg	Borden Chemical Co., Smith Douglass Div.	-
Plant City	Tampa-St. Petersburg	Central Phosphates	100,000
South Pierce	--	Agrico Chemical Co., Div. Continental Oil Co.	227,500
Tampa	Tampa-St. Petersburg	U.S. Phosphoric Products, Div. Tennessee Corp.	360,000
White Springs	--	Occidental Corp. of Florida	250,000
IDAHO			
Conda	--	El Paso Products Co.	90,000
Kellogg	--	Collier Carbon and Chemical Co.	33,000
Pocatello	--	J. R. Simplot Co.	270,000
ILLINOIS			
Depue	--	New Jersey Zinc Co.	130,000
East St. Louis	St. Louis	Allied Chemical Corp.	50,000
Joliet	Chicago	Olin Mathieson Chemical Corp., Chemicals Div.	125,000
Marseilles	--	Hooker Chemical Corp., Farm Chemicals Div.	200,000
Morris	--	Des Plaines Chemical Co.	90,000
Streator	--	Borden Chemical Co., Div. Smith-Douglass Co.	33,000
Tuscola	--	U.S. Industrial Chemicals Co., Div. National Distillers & Chemical Corp.	30,000
INDIANA			
Gary	Gary-Hammond-East Chicago	Mobil Chemical Co., Div. Mobil Oil Corp.	30,000
LOUISIANA			
Covent	--	Freeport Chemical Co.	600,000
Donaldsonville	--	Gulf Oil Corp.	-

Table F-6 (continued). PHOSPHORIC ACID PLANTS (Wet Process)
June 1968

State City	SMSA	Company	Capacity, P_2O_5 Tons per Year
LOUISIANA (cont.)			
Geismar	--	Allied Chemical Corp., Nitrogen Div.	180,000
Taft	--	Hooker Chemical Corp.	100,000
MINNESOTA			
Pine Bend	Minneapolis-St. Paul	Cenex, Inc.	54,000
MISSISSIPPI			
Pascaugoula	--	Coastal Chemical Corp.	50,000
MISSOURI			
Joplin	--	Farmers Chemical Co.	50,000
Joplin	--	W. R. Grace and Co.	50,000
NORTH CAROLINA			
Aurora	--	Texas Gulf Sulfur Co.	375,000
OKLAHOMA			
Tulsa	Tulsa	Nipak, Inc.	30,000
TEXAS			
Houston	Houston	Phosphates Chemicals, Inc.	100,000
Pasadena	Houston	Olin Mathieson Chemical Corp., Agricultural Div.	200,000
Pasadena	Houston	Phillips Chemical Co.	50,000
UTAH			
Garfield	Salt Lake City	Stauffer Chemical Co., Fertilizer Div.	100,000

Table F-7 PHOSPHORIC ACID AND SUPERPHOSPHORIC ACID PLANTS (Thermal Process)
June 1968

State City	SMSA	Company	Phosphorus Production or Burning Capacity, Tons per Year
ALABAMA			
Muscle Shoals	--	Tennessee Valley Authority	37,600
CALIFORNIA			
Newark	San Francisco-Oakland	F M C Corp., Inorganic Chemical Div.	-
Long Beach	Los Angeles-Long Beach	Monsanto Co.	-
Richmond	San Francisco-Oakland	Stauffer Chemical Co., Fertilizer Div.	-
COLORADO			
Pueblo	Pueblo	CF&I Steel Corp. (idle)	-
FLORIDA			
Nichols	--	Mobil Chemical Co., Div. Mobil Oil Corp.	6,000
Pierce	--	Agrico Chemical Co., Div. Continental Oil Co.	40,000
Tarpon Springs	Tampa-St. Petersburg	Stauffer Chemical Co.	15,000
KANSAS			
Lawrence	--	F M C Corp., Inorganic Chemical Div.	-
MONTANA			
Butte	--	Stauffer Chemical Co.	30,000
NEW JERSEY			
Carteret	--	Agrico Chemical Co., Div. Continental Oil Co.	40,000
Carteret	--	F M C Corp., Inorganic Chemical Div.	-
Kearny	Jersey City	Monsanto Co.	-
NEW YORK			
Niagara Falls	Buffalo	Hooker Chemical Corp., Industrial Chemical Div.	6,000

Table F-7 (continued). PHOSPHORIC ACID AND SUPERPHOSPHORIC ACID PLANTS (Thermal Process)
June 1968

State City	SMSA	Company	Phosphorus Production or Burning Capacity, Tons per Year
OHIO			
Fernald	Cincinnati	Mobil Chemical Co., Div. Mobil Oil Corp.	-
Addyston	Cincinnati	Monsanto Co.	-
PENNSYLVANIA			
Morrisville	Philadelphia	Stauffer Chemical Co.	-
SOUTH CAROLINA			
Charleston	Charleston	Mobil Chemical Co., Div. Mobil Oil Corp.	10,000
TENNESSEE			
Columbia	--	Hooker Chemical Corp., Industrial Chemical Div.	68,400
Columbia	--	Mobil Chemical Co., Div. Mobil Oil Corp.	20,000
Columbia	--	Monsanto Company	110,000
Columbia	--	Stauffer Chemical Co.	80,000
TEXAS			
Brownfield	--	Goodpasture Grain and Milling Co.	19,000
Dallas	Dallas	Hooker Chemical Corp., Industrial Chemical Div.	-

APPENDIX G

POTASH PRODUCTION STATISTICS

Table G-1 PRINCIPAL PRODUCERS OF POTASH IN THE UNITED STATES

Company	County & State	Capacity tons K_2O/year
Amax Chemical Corp.	Eddy, New Mexico	a
Duval Corp.	Eddy, New Mexico	450,000
International Mineral & Chemical Corp.	Eddy, New Mexico	425,000
Kerr-McGee Chemical Corp.	Lea, New Mexico	300,000
National Potash Co.	Eddy, New Mexico	300,000
Potash Co. of America	Eddy, New Mexico	600,000
Southwest Potash Corp.	Eddy, New Mexico	550,000
U. S. Borax & Chemical Corp.	- New Mexico	550,000
Kerr-McGee Chemical Corp.	San Bernardino, Cal.	a
American Potash & Chemical Corp.	Searles Lake, Cal.	220,000
Kaiser Aluminum & Chemical Corp.	Tooele, Utah	a
Texas Gulf Sulphur Co.	Grand, Utah	360,000
Dow Chemical Co.	Michigan	Produces a very small quantity

a) Data not available.

APPENDIX H

BORON PRODUCTION STATISTICS

Table H-1 PRINCIPAL PRODUCERS OF BORON IN THE UNITED STATES

Company	Location	Capacity (tons per year 1971)	Method of producing boron
United States Borax and Chemical Corporation	Kern County	500,000	Ore beneficiation
Tenneco Oil Company	Inyo County	150,000	Ore beneficiation
American Potash and Chemical Company	Searles Lake (San Bernardino County)	100,000	Processing lake brines
Hooker Chemical Corporation	Searles Lake	65,000	Processing lake brines
Stauffer Chemical Company	Searles Lake	30,000	Processing lake brines

APPENDIX I

MICA INDUSTRY STATISTICS

Table I-1 MICA GRINDERS IN 1960 (5)

Location of Mill			Method of Grinding		Company Name and Address
State	County	Nearest Town	Wet	Dry	
Alabama	Cleburne	Heflin		X	Dixie Mines, Inc., Box 365, Heflin, Ala.
Arizona	Cochise	Tombstone		X	James Steward Co., Tombstone, Ariz.
	Maricopa	Buckeye		X	Buckeye Mica Co., Buckeye, Ariz.
California	Imperial	Ogilby		X	C.O. Fiedler, Inc. 2221 East 37th St., Los Angeles 58, Calif.
Do	Los Angeles	Los Nietos		X	Sunshine Mica Co., 440 Seaton St. Los Angeles 13, Calif.
Colorado	Larimer	Fort Collins		X	Jolex Mica Co., Fort Collins, Colo.
Georgia	Bartow	Cartersville		X	Thompson-Weinman & Co., Cartersville, Ga.
Do	Hart	Hartwell		X	The Funkhouser Mills, Div. of the Ruberoid Co., P.O. Box 569, Hagerstown, Md.
Illinois	Cook	Forest Park		X	U.S. Mica Co., Inc., 26 6th St., Stamford, Conn.
Massachusetts	Middlesex	Wilmington	X		Hayden Mica Co., Wilmington, Mass.
New Hampshire	Merrimack	Penacook	X		Concord Mica Corp., Concord, N.H.
New Mexico	Taos	Ojo Caliente		X	Los Compadres Mica Co., Ojo Caliente, N. Mex.
North Carolina	Avery	Plumtree	X		David T. Vance, Plumtree, N.C.
Do	Buncombe	Biltmore	X	X	Asheville Mica Co., P.O. Box 318, Newport News, Va.
Do	Cleveland	Kings Mountain		X	Kings Mountain Mica Co., Inc., Box 709, Kings Mountain, N.C.
Do	Macon	Franklin	X	X	Franklin Mineral Prod. Co., Box 28, Franklin, N.C.
Do	Mitchell	Spruce Pine		X	DeWeld Mica Corp., Spruce Pine, N.C.
Do	Do	Do	X		Diamond Mica Co., Spruce Pine, N.C.
North Carolina	Mitchell	Spruce Pine	X		The English Mica Co., Ridgeway Center Bldg., Stanford, Conn.
Do	Do	Do		X	Harris Clay Co., Spruce Pine, N.C.
Do	Do	Minpro		X	Lawson-Boone Mica Co., Minpro, N.C.
Do	Yancey	Burnsville		X	Hassett Mining Co., Burnsville, N.C.
Do	Do	Newdale		X	Deneen Mica Co., Burnsville, N.C.
Pennsylvania	York	Glenville		X	General Mining Assoc., 700 Cathedral St., Baltimore, Md.
South Carolina	Lancaster	Kershaw		X	Mineral Mining Corp., Kershaw, S.C.
Tennessee	Unicoi	Erwin			International Minerals Chemical Corp., Old Orchard Road, Skokie, Ill.
	Greene	Greenville			
Do	Sullivan	Kingsport		X	Carolina-Southern Mining Co., Inc., Kingsport, Tenn.
Texas	Tarrant	Fort Worth		X	Western Mica Corp., 101 South Meramec, Clayton 5, Mo.
Virginia		Newport News	X		Richmond Mica Corp., 900 Jefferson Ave., Newport News, Va.

APPENDIX J

FLUORSPAR INDUSTRY STATISTICS

Table J.1 PRINCIPAL PRODUCERS OF FLUORSPAR

Company	County, State	Type of Activity
Minerva Co., Mining Div.		
Minerva Oil Co., Crystal Group	Hardin & Pope, Ill.	Underground mine & mill
Minerva No. 1	Hardin, Ill.	Underground mine & mill
Ozark-Mahoning Co.	Hardin & Pope, Ill.	Underground mine & mill
Industrial Chemicals Div.		
Allied Chemical Corp.	Boulder, Colo.	Underground mine & plant
Ozark-Mahoning Co.	Jackson, Colo.	Underground mine & plant
Calvert City Chemical Co.	Livingston, Ky.	Underground mine & mill
Minerva Oil Co.	Crittenden, Ky.	Underground mine
Kentucky Fluorspar Co.	Crittenden, Ky.	Underground mine & mill
Roberts Mining Co.	Ravalli, Montana	Mine & plant

TECHNICAL REPORT DATA *(Please read Instructions on the reverse before completing)*		
1. REPORT NO. EPA-650/2-74-122	2.	3. RECIPIENT'S ACCESSION NO.
4. TITLE AND SUBTITLE Trace Pollutant Emissions from the Processing of Non-Metallic Ores		5. REPORT DATE November 1974 6. PERFORMING ORGANIZATION CODE
7. AUTHOR(S) Vishnu Katari, Gerald Isaacs, and Timothy W. Devitt		8. PERFORMING ORGANIZATION REPORT NO.
9. PERFORMING ORGANIZATION NAME AND ADDRESS PEDCo-Environmental Specialists, Inc. Suite 13, Atkinson Square Cincinnati, Ohio 45246		10. PROGRAM ELEMENT NO. 1AB015; ROAP 21AUZ-02a 11. CONTRACT/GRANT NO. 68-02-1321 (Task 4)
12. SPONSORING AGENCY NAME AND ADDRESS EPA, Office of Research and Development NERC-RTP, Control Systems Laboratory Research Triangle Park, NC 27711		13. TYPE OF REPORT AND PERIOD COVERED Final; Through 6/19/74 14. SPONSORING AGENCY CODE
15. SUPPLEMENTARY NOTES		

16. ABSTRACT The report gives results of a study to identify significant sources of emissions of potentially hazardous trace pollutants from mining and processing of nonmetallic minerals. Based on a review of domestic ore processing data and consideration of both the toxicity of potential pollutants and the significance of fugitive dust emissions, the following nine industries were selected for further study: cement, clay (including porcelain, refractory, and brick), gypsum, lime, phosphate rock (including fertilizer), potash, boron, mica, and fluorspar. Provided for each of the nine industries are process flow diagrams identifying major processes and material flow, identification of sources of emissions of various pollutants, and process descriptions. The report recommends that five processes be further evaluated because of their potential for emissions of hazardous pollutants or fugitive dust: kilns (cement and lime industries), phosphate rock mining and washing, clay mining, hydrator (thermal phosphoric acid production), and reactor (wet-process phosphoric acid production).

17. KEY WORDS AND DOCUMENT ANALYSIS			
a. DESCRIPTORS		b. IDENTIFIERS/OPEN ENDED TERMS	c. COSATI Field/Group
Air Pollution	Toxicity	Air Pollution Control	13B, 06T
Hazardous Materials	Dust	Stationary Sources	11G
Nonmetalliferous Minerals	Kilns	Trace Pollutants	13A
	Phosphoric Acids	Hydrators	08G, 07B
Mining	Reactors		08I
Processing	Clays		13H, 11C
18. DISTRIBUTION STATEMENT Unlimited		19. SECURITY CLASS *(This Report)* Unclassified 20. SECURITY CLASS *(This page)* Unclassified	21. NO. OF PAGES 277 22. PRICE

ENVIRONMENTAL PROTECTION AGENCY
Technical Publications Branch
Office of Administration
Research Triangle Park, N.C. 27711

OFFICIAL BUSINESS

AN EQUAL OPPORTUNITY EMPLOYER

POSTAGE AND FEES PAID
ENVIRONMENTAL PROTECTION AGENCY
EPA - 335

SPECIAL FOURTH-CLASS RATE
BOOK

U.S. MAIL

Return this sheet if you do NOT wish to receive this material ☐, or if change of address is needed ☐. (Indicate change, including ZIP code.)

PUBLICATION NO. EPA-650/2-74-122