EPA-650/2-75-026-a

March 1975

Environmental Protection Technology Series

TESTING OF A MOLECULAR SIEVE USED TO CONTROL MERCURY EMISSION FROM A CHLOR-ALKALI PLANT, VOLUME I

U.S. Environmental Protection Agency
Office of Research and Development
Washington, DC 20460

EPA-650/2-75-026-a

TESTING OF A MOLECULAR SIEVE USED TO CONTROL MERCURY EMISSION FROM A CHLOR-ALKALI PLANT, VOLUME I

by

John T. Chehaske and John R. Cline

Engineering-Science, Inc.
7903 Westpark Drive
McLean, Virginia 22101

Contract No. 68-02-1406, Task 3
ROAP No. 21AFA-106
Program Element No. 1AB015

EPA Task Officer: E.J. Wooldridge

Control Systems Laboratory
National Environmental Research Center
Research Triangle Park, N. C. 27711

Prepared for

U.S. ENVIRONMENTAL PROTECTION AGENCY
OFFICE OF RESEARCH AND DEVELOPMENT
WASHINGTON, D. C. 20460

March 1975

EPA REVIEW NOTICE

This report has been reviewed by the National Environmental Research Center - Research Triangle Park, Office of Research and Development, EPA, and approved for publication. Approval does not signify that the contents necessarily reflect the views and policies of the Environmental Protection Agency, nor does mention of trade names or commercial products constitute endorsement or recommendation for use.

RESEARCH REPORTING SERIES

Research reports of the Office of Research and Development, U. S. Environmental Protection Agency, have been grouped into series. These broad categories were established to facilitate further development and application of environmental technology. Elimination of traditional grouping was consciously planned to foster technology transfer and maximum interface in related fields. These series are:

1. ENVIRONMENTAL HEALTH EFFECTS RESEARCH
2. ENVIRONMENTAL PROTECTION TECHNOLOGY
3. ECOLOGICAL RESEARCH
4. ENVIRONMENTAL MONITORING
5. SOCIOECONOMIC ENVIRONMENTAL STUDIES
6. SCIENTIFIC AND TECHNICAL ASSESSMENT REPORTS
9. MISCELLANEOUS

This report has been assigned to the ENVIRONMENTAL PROTECTION TECHNOLOGY series. This series describes research performed to develop and demonstrate instrumentation, equipment and methodology to repair or prevent environmental degradation from point and non-point sources of pollution. This work provides the new or improved technology required for the control and treatment of pollution sources to meet environmental quality standards.

This document is available to the public for sale through the National Technical Information Service, Springfield, Virginia 22161.

ABSTRACT

Performance testing for mercury emission control was conducted by Engineering-Science, Inc. on the Union Carbide PuraSiv Hg* unit currently controlling mercury emissions from the by-product hydrogen stream of the mercury-cell chlor-alkali production facility of Sobin Chlor-Alkali in Orrington, Maine.

Simultaneous samplings of adsorber inlet and outlet streams were performed during five consecutive 24-hour adsorption cycles, eight sampling runs per cycle, in accordance with a modified version of EPA Reference Method 102. Inlet mercury concentrations were stable at 6 to 10 milligrams per Normal cubic meter (mg/Nm^3). Outlet mercury concentrations of 0.5 and 3.5 mg/Nm^3 were approached at the beginning and end of each adsorption cycle, respectively. This occurrence was due to operation of the unit at nearly 150% of design capacity of 49.6 Nm^3/min.

If operated at design capacity, the estimate outlet mercury concentrations from the PuraSiv Hg unit would average 2.0 $\mu g/Nm^3$ throughout each adsorption cycle, representing a 99.9% collection efficiency.

This report was submitted in fulfillment of Contract Number 68-02-1406, Task Number 3 by Engineering-Science, Inc. under the sponsorship of the Environmental Protection Agency. Work was completed as of January 31, 1975.

---

*Registered Trademark of the Union Carbide Corporation

CONTENTS

		Page
Abstract		iii
List of Figures		v
List of Tables		vi
Acknowledgements		vii
Sections		
I	Introduction	I-1
II	Summary	II-1
III	Process Description and Operation	III-1
IV	Sampling and Analytical Procedures	IV-1
V	Discussion of Results	V-1

FIGURES

No.		Page
III-1	Schematic Diagram of Mercury-Cell Process	III-2
III-2	By-Product Hydrogen Stream Flow Diagram (Shown With A-1 Adsorbing and A-2 Regenerating	III-4
IV-1	Location of Inlet Sampling Port and Detail of Probe and Pitot Tube Assembly	IV-3
IV-2	Location of Outlet Sampling	IV-5
IV-3	Windowless Gas Cell Used in Analysis	IV-12
V-1	Sketch of Typical Adsorption Curve	V-12
V-2	Sketch of Adsorption Curve Generated from Test Data - Cycle No. 5	V-13
V-3	Errors Due to Anisokinetic Conditions (Small Particles)	V-20

TABLES

No.		Page
III-1	Chlorine Production Rates (Cycle No. 1)	III-7
III-2	Chlorine Production Rates (Cycle No. 2)	III-8
III-3	Chlorine Production Rates (Cycle No. 3)	III-9
III-4	Chlorine Production Rates (Cycle No. 4)	III-10
III-5	Chlorine Production Rates (Cycle No. 5)	III-11
V-1	PuraSiv Hg Mercury Control Performance Summary (Cycle No. 1)	V-2
V-2	PuraSiv Hg Mercury Control Performance Summary (Cycle No. 2)	V-3
V-3	PuraSiv Hg Mercury Control Performance Summary (Cycle No. 3)	V-4
V-4	PuraSiv Hg Mercury Control Performance Summary (Cycle No. 4)	V-5
V-5	PuraSiv Hg Mercury Control Performance Summary (Cycle No. 5)	V-6
V-6	Mercury Inlet Data Summary (Metric)	V-15
V-7	Mercury Inlet Data Summary (English)	V-17

ACKNOWLEDGEMENTS

The project management is sincerely grateful to the many persons and organizations which expended their time and cooperation in assisting with the completion of this test program.

Particular thanks are extended to Mr. Pete DeAngelis and his staff at Sobin Chlor-Alkali for generously allowing the testing to be conducted at the Orrington facility as well as for providing technical and physical support to the test team.

Mr. Carmen Yon and Mr. Tom Holcombe of Union Carbide were extremely helpful by providing much information about the PuraSiv Hg process and technical knowledge of the system operation.

SECTION I

INTRODUCTION

Engineering-Science, Inc. (ES) was contracted by the Environmental Protection Agency, Office of Research and Development, Control Systems Laboratory, for the purpose of testing a PuraSiv Hg unit for mercury control at the Sobin Chlor-Alkali plant in Orrington, Maine. This particular plant is a manufacturer of chlorine and sodium hydroxide by the conventional mercury-cell process. The specific assignment of this contract required the determination of mercury emission measurements in order to permit a technical/economical evaluation of the performance of the proprietary Union Carbide PuraSiv Hg Process currently controlling mercury emissions from the plant's by-product hydrogen stream. This particular adsorption unit had been in service for approximately two years at the time of the testing.

The by-product hydrogen stream originating from the decomposer portion of the mercury-cell process undergoes primary cooling and demisting, then mild compression followed by secondary cooling and demisting. At this point, the hydrogen stream is preheated and passed through an adsorption bed for additional mercury removal.

The PuraSiv Hg Process is designed such that there is always one adsorption bed in service while a second adsorber is undergoing regeneration. The cycles for adsorption and regeneration are alternated between the two beds on a 24-hour basis.

Sites for mercury sampling were located at the outlet line of the adsorption bed and on the inlet line to the adsorber, downstream of the final demister but prior to the preheater. A total of five complete 24-hour adsorption cycles were tested during the period of September 24-29, 1974. All sample runs consisted of a continuous

2-hour sampling of inlet and outlet streams simultaneously. An hour interval between successive sample runs was utilized for the purpose of sample recovery and preparation of new sampling trains. All field testing and subsequent laboratory analyses were performed by personnel of ES and the subcontractor, Commonwealth Laboratory.

The report for this test program has been published in two volumes with Volume I containing the body of the report and with Volume II consisting of the appendices.

SECTION II

SUMMARY

Source testing was conducted on the Union Carbide PuraSiv Hg unit at the Sobin Chlor-Alkali plant in Orrington, Maine in order to permit a technical/economical evaluation of the mercury removal performance of the proprietary adsorption system. This particular unit is currently controlling mercury emissions from the by-product hydrogen stream associated with the daily production of 200 tons of chlorine by the mercury-cell chlor-alkali process.

The specific objectives of this test program were:

a. to establish the levels, with times of occurrence, of the effluent mercury emissions from the PuraSiv Hg unit;

b. to define the mercury collection efficiency of the molecular sieves during a complete adsorption cycle, as well as at specific intervals within a given cycle; and

c. to verify that the adsorber mercury emissions do not exceed 60 ppbv, as claimed by Union Carbide, regardless of the inlet mercury loadings to the adsorber.

This information was successfully obtained as detailed in Section V of this report.

The by-product hydrogen stream exiting from the decomposer undergoes conventional treatment steps of primary cooling, demisting, centrifugal collection, secondary cooling and final demisting. This stream is then passed through an adsorbent bed which entraps additional mercury. There are two separate adsorbers which alternate on a 24-hour basis between adsorption service and regeneration, such that one bed is always "on-line."

A portion of the "clean" hydrogen from the "on-line" adsorber is heated and passed down through the "off-line" bed in order to strip

the previously collected mercury from the adsorbent. This resultant mercury-laden regeneration gas is returned to the inlet of the primary cooler. Another portion of the "clean" hydrogen is recycled directly back to the primary cooler inlet in order to satisfy the suction demands of the positive-displacement blower located downstream of the initial demisting stage. The remainder of the hydrogen from the adsorber outlet is either used for boiler combustion and/or vented to the atmosphere.

Mercury sampling runs were conducted simultaneously on the adsorber inlet and outlet streams for a period of 2 hours in accordance with a modified version of the sampling procedures detailed in EPA Reference Method 102.* A copy of the method is contained in Appendix F. A total of five complete adsorption cycles were tested during the test program.

There were no great variations of mercury concentrations in the adsorber inlet stream. Concentrations at this point ranged from 6 to 10 milligrams per Normal cubic meter (mg/Nm^3)+ and did not correlate with any changes in chlorine production rates. Outlet mercury concentrations exhibited a definite cyclic pattern. Outlet mercury concentrations approaching 0.5 mg/Nm^3 were measured during the initial hours of the cycle, after which the outlet stream was virtually mercury-free until the 20th hour of the adsorption cycle. After this initiation of "breakthrough," mercury concentrations escalated during the last hours of the cycle to values as high as 3.5 mg/Nm^3.

This cyclic variation in outlet mercury concentration was due to the fact that the adsorbers were being operated at approximately

---

*"Reference Method for Determination of Particulate and Gaseous Mercury Emissions from Stationary Sources (Hydrogen Streams)," as published in the Federal Register, Vol. 38, No. 66, Part II, April 6, 1973.

+Normal conditions are defined as 760 millimeters of mercury and 21.1 degrees Centigrade.

145% of the design flow conditions. An excessive loading of mercury to the adsorber resulted in the adsorbent capacity being spent earlier than designed with consequent "breakthrough" after completion of only 80% to 85% of the adsorption cycle. At this point, unheated regeneration gas being passed down through the regenerated bed to prepare it for adsorption was actually depositing mercury on the adsorbent near the top of the bed. As an adsorption cycle was begun, mercury in the inlet stream was initially "trapped" near the bottom of the bed, and the gas stream approached the top of the bed as a clean gas. Encountering mercury at the top of the bed resulted in the clean gas stripping the mercury from the adsorbent at the top. Thus, outlet mercury concentrations, on the order of 0.5 mg/Nm^3, were measured at the beginning of the adsorption cycles.

A realistic evaluation of the PuraSiv Hg unit would exclude the mercury discharged during the "wash out" in the first part of the adsorption cycle as well as the mercury emissions occurring after early "breakthrough." Outlet mercury concentrations, more representative of the adsorber operation at design conditions, were experienced after "wash out" and before "breakthrough" when mercury concentrations were consistently below 10 micrograms per Normal cubic meter ($\mu g/Nm^3$). Examination of these results reveal a mean concentration of mercury in the outlet equivalent to 2.0 $\mu g/Nm^3$ with a standard deviation of 0.35 $\mu g/Nm^3$. On a 95% confidence basis, this corresponds to a mean mercury concentration of 2.0 ± 0.73 $\mu g/Nm^3$, which is well below the guaranteed maximum outlet mercury concentration of 60 ppbv (500 $\mu g/Nm^3$) as claimed by Union Carbide.

Isokinetic sampling conditions for the inlet samples were consistently low due to a small error in the estimated gas moisture content. Actual sampling rates averaged 79% of the theoretical isokinetic sampling rate. In many systems, sampling at less than the isokinetic

rate results in calculated pollutant concentrations that are higher than the actual concentrations. However, in systems containing only gaseous and/or very small particulate pollutants (such as mist or fume), no error is introduced by anisokinetic sampling. Because the measured mercury concentrations were below the equilibrium saturation concentration and, furthermore, because the mist elimination units located upstream of the sampling site are purported to remove more than 99% of all particles larger than 3 microns, it is believed that the underisokinetic sampling did not affect the accuracy of the measured mercury concentrations.

SECTION III

PROCESS DESCRIPTION AND OPERATION

The Sobin plant began chlorine production by the mercury-cell process in 1967 utilizing the De Nora 24H5 type cell. The present production consists of twenty individual cells that operate on a continuous basis (24 hours/day, 7 days/week) in order to maintain a daily production rate of 200 tons of chlorine.

As Figure III-1 illustrates, the mercury-cell consists of two distinct sections: the electrolyzer and the decomposer. Sodium chloride brine is pumped into the inlet end-box and flows cocurrently between a liquid mercury cathode and a stationary anode. Application of a high current density between the electrodes causes an electrolytic reaction which produces chlorine gas at the anode and a sodium amalgam at the cathode. The chlorine gas is exhausted to further treatment such as cooling, drying, compression and liquefaction before it reaches the final product stage. Spent brine from the cell is recycled to the purified brine preparation facilities and the sodium amalgam passes into the decomposer.

In the decomposer, the amalgam serves as an anode to a short-circuited graphite cathode. By continuously adding purified water to the decomposer, a second reaction is initiated whereby sodium hydroxide and by-product hydrogen gas are formed. Before reaching the final product stage, the sodium hydroxide undergoes additional treatment such as filtration and concentration. The mercury regenerated in the decomposer is returned to the inlet end-box of the electrolyzer for reuse. The by-product hydrogen stream is subjected to a series of treatment steps for the purpose of removal of entrained mercury prior to final disposition of the hydrogen. In most instances approximately 93% of the total mercury emissions from a mercury-cell chlor-alkali plant are from this by-product hydrogen stream.

FIGURE III-1. SCHEMATIC DIAGRAM OF MERCURY-CELL PROCESS

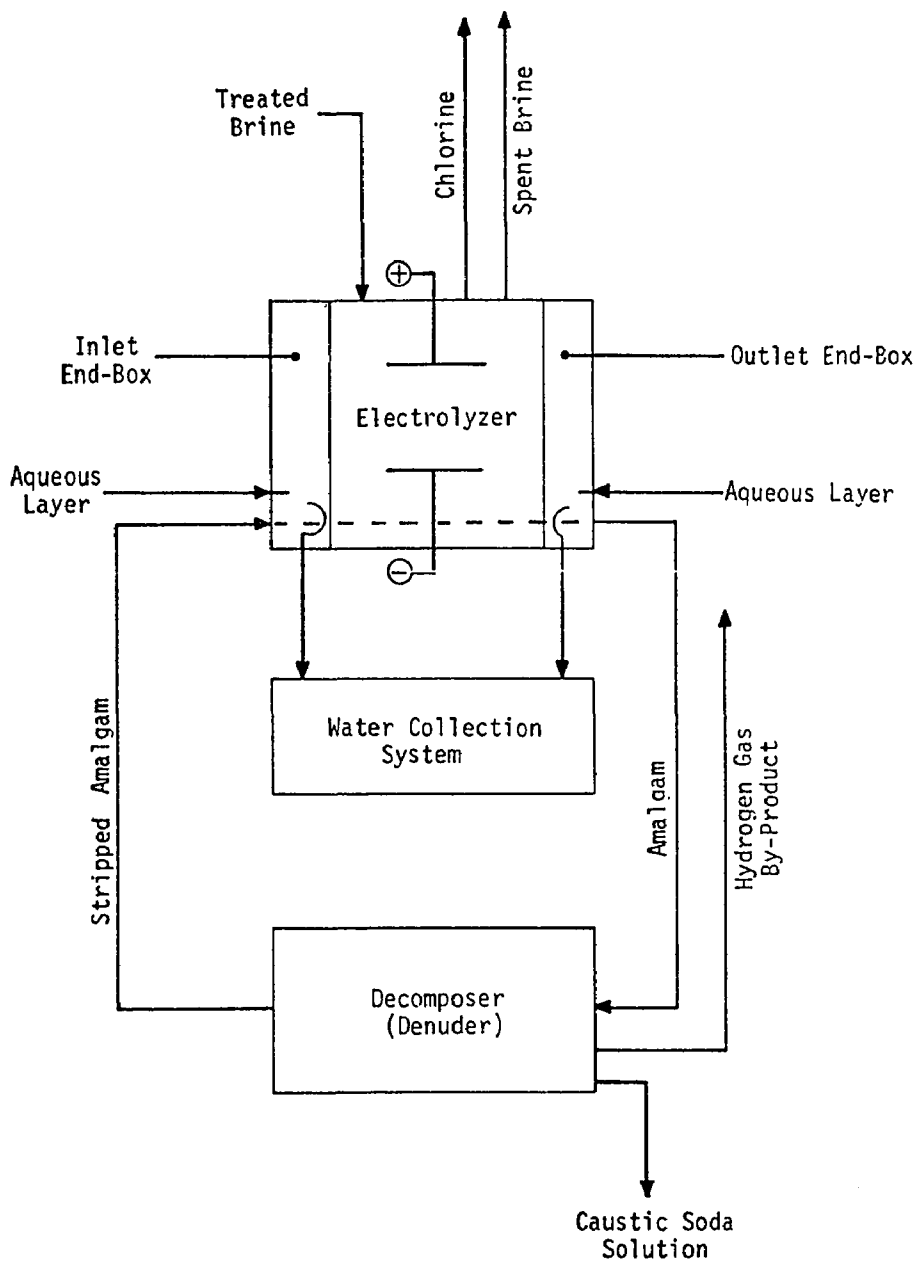

In addition to the by-product hydrogen stream, there are two other sources of mercury emissions from the conventional mercury-cell process. The end-box ventilation system which exhausts mercury vapor from the end-boxes of each cell accounts for approximately 5% of the total potential mercury emission from the mercury-cell process. In order to prevent excessive exposure of the cell-room personnel to mercury, the cell-room must be adequately ventilated. The amount of mercury exhausted from the cell-room ventilation air is a function of the effectiveness of the cell-room maintenance and housekeeping procedures, but this source of mercury emission can amount to as much as 1 to 2% of the total potential mercury emission from the process.

Figure III-2 illustrates the mercury removal techniques employed on the by-product hydrogen stream at the Sobin plant. First, the mercury-laden hydrogen, saturated with water vapor, passes through a primary cooler and a York demister. In the process, portions of the water and mercury vapors, as well as some existing mercury mist, are removed. The hydrogen stream is then compressed to approximately four to five psig by a water-sealed positive-displacement blower, after which the stream encounters a centrifugal knock-out pot, a water-cooled chiller and a Brink mist eliminator in succession. All of these operations, with the exception of the primary cooler, are housed in the one-room compressor building. Following the Brink mist eliminator, the hydrogen stream is piped outside to the PuraSiv Hg skid.

A steam heater is used to preheat the hydrogen stream, after which the hydrogen enters the bottom of one of the two adsorption beds which contain the proprietary adsorbent material. Although there are two adsorption beds, only one bed is on-line at any given time while simultaneously the second bed is being regenerated. These adsorbers alternate on a 24-hour cycle between adsorption and regeneration, and the cycle is switched daily at 5:00 p.m.

FIGURE III-2. BY-PRODUCT HYDROGEN STREAM FLOW DIAGRAM
(SHOWN WITH A-1 ADSORBING AND A-2 REGENERATING)

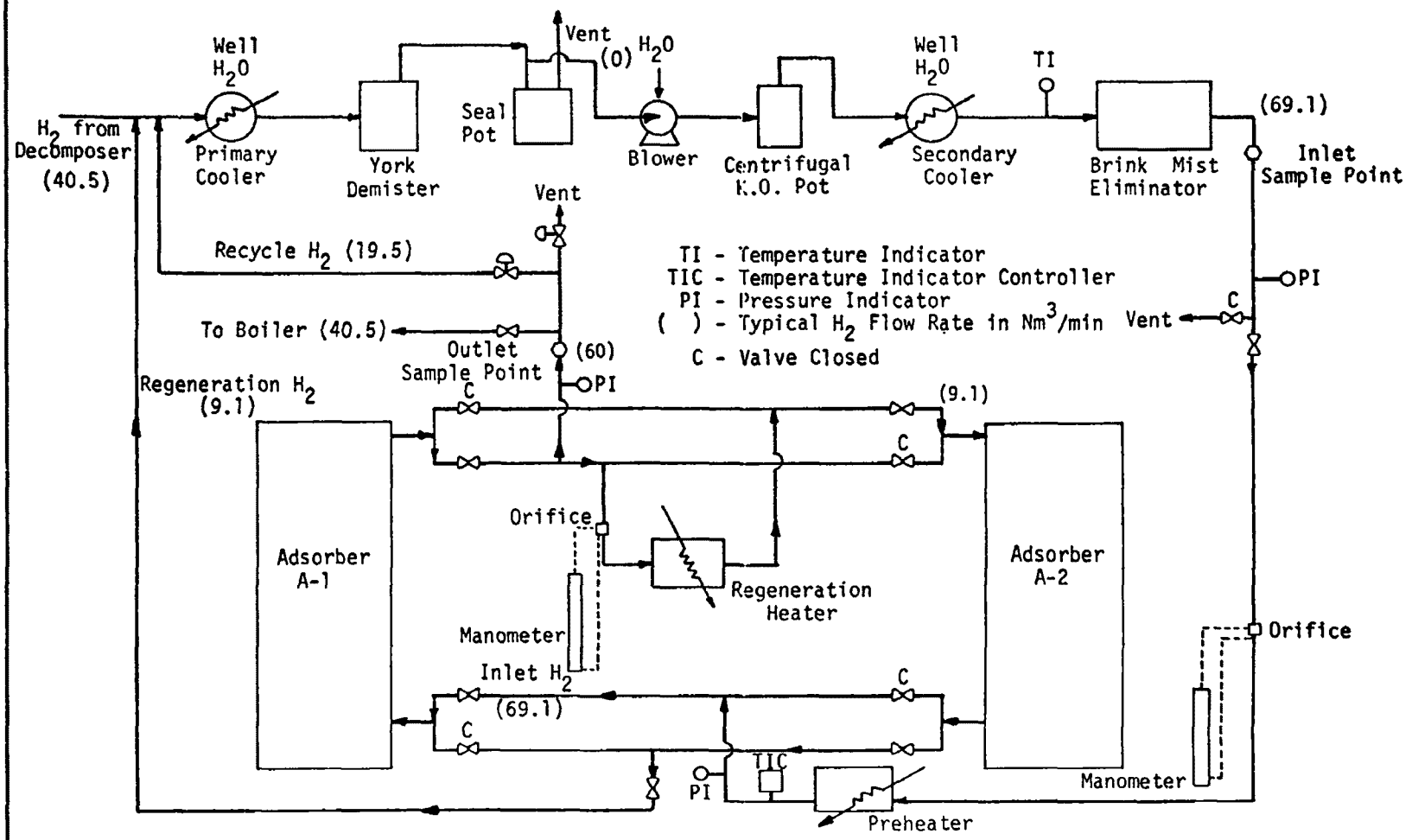

As the hydrogen stream moves up through the adsorption bed, mercury which escaped the previous cooling and demisting stages is "trapped" by the adsorbent. This results in an adsorber effluent hydrogen stream with a considerably reduced mercury content. The treated hydrogen stream is then split and disposed of in four ways: (1) regeneration gas, (2) recycle gas, (3) boiler fuel, and (4) stack vent.

The spent adsorption bed is regenerated by passing a hot hydrogen gas stream down through the bed. A portion of the treated hydrogen stream is passed through an electrical heater raising the gas temperature to approximately 500°F, after which the heated gas passes down through the bed removing the mercury from the adsorbent. The regenerator exhaust is a heavily mercury-laden hydrogen stream which is returned to the inlet of the primary cooler.

Because the water-sealed blower is of the positive-displacement type, it demands a constant volumetric flow at the blower suction. In order to satisfy the blower demand and hence maintain consistent pressures throughout the system, a portion of the treated hydrogen stream is recycled to the inlet of the primary cooler as dictated by an automatic pressure controller.

Currently, the blower is oversized for the system in order to accommodate an increase in by-product hydrogen associated with the planned expansion of the chlorine production facilities. In the interim, however, the existing hydrogen production rate combined with the returned regeneration stream is not nearly adequate to meet the blower requirements. Consequently, a large portion (approximately 48%) of the by-product hydrogen stream is passed through the adsorption process and then returned to the blower suction upstream of the primary cooler. However, return of the "clean" hydrogen at this point mixes this "clean" hydrogen with the decomposer by-product hydrogen stream which is saturated

with mercury vapor and contains entrained liquid mercury particles. Because liquid mercury is present, thermodynamic considerations dictate that some of this liquid mercury will evaporate into the original clean portion of the combined gas stream in an effort to achieve equilibrium. Consequently, although the total amount of mercury entering the primary cooler is unchanged, the amount of mercury present in the vapor state which enters the primary cooler has been increased above the amount of mercury vapor coming only from the decomposer, and hence has increased the mercury vapor loading to the PuraSiv Hg unit.

Rather than simply vent all the remaining treated hydrogen to the atmosphere, some hydrogen is sent to a boiler at the plant in order to recover the heat value of the stream. When the quantity of available hydrogen exceeds the boiler requirements, an automatic control valve actuates, bleeding the excess hydrogen through a stack into the atmosphere.

Although plant personnel do not record hourly chlorine production rates per se, process data is recorded which will permit the calculation of chlorine production rates. The chlorine production is directly proportional to the number of cells on-line, the voltage (DC) impressed across the electrolytic cells, and the total amperage consumed. These three parameters are recorded hourly in the plant operating log. The plant production guideline is that 192 tons of chlorine per day are generated with 20 cells, 92 volts and 280,000 amperes. Production rates at other operating conditions can be calculated by utilizing a ratio. For example, when operating at 88 volts, 280,000 amperes and 19 cells, the hourly chlorine production rate is:

$$Cl_2 \text{ rate} = \frac{19 \text{ cells} \times 88 \text{ volts} \times 280 \times 10^3 \text{ amps}}{20 \text{ cells} \times 92 \text{ volts} \times 280 \times 10^3 \text{ amps}} \times \frac{192 \text{ tons } Cl_2/\text{day}}{24 \text{ hours/day}}$$

$$= 7.2 \text{ tons } Cl_2/\text{hour}$$

Process data for the duration of the test period and calculated production rates are contained in Tables III-1 through III-5 on the following pages.

Table III-1. CHLORINE PRODUCTION RATES

Date: September 24-25, 1974

Test Cycle: No. 1

Time	No. of Cells	Total Amperes x 10^{-3}	Total Volts (DC)	Tons Cl_2/Hour
1700	20	282	93	8.14
1800	20	282	93	8.14
1900	20	282	93	8.14
2000	20	282	93	8.14
2100	20	282	92	8.06
2200	20	282	92	8.06
2300	20	283	92	8.09
2400	20	283	92	8.09
0100	20	283	92	8.09
0200	20	283	92	8.09
0300	20	282	92	8.06
0400	20	282	92	8.06
0500	20	282	92	8.06
0600	20	282	92	8.06
0700	20	282	92	8.06
0800	20	282	92	8.06
0900	20	282	92	8.06
1000	20	282	92	8.06
1100	20	282	92	8.06
1200	20	282	92	8.06
1300	20	282	92	8.06
1400	20	280	92	8.00
1500	20	280	93	8.09
1600	20	281	93	8.12

Total Cl_2 Production During Cycle = 194 tons

Mean Cl_2 Production Rate During Cycle = 8.08 tons/hr

Standard Deviation of Cl_2 Production Rate = 0.034 tons/hr

Table III-2. CHLORINE PRODUCTION RATES

Date: September 25-26, 1974

Test Cycle: No. 2

Time	No. of Cells	Total Amperes x 10^{-3}	Total Volts (DC)	Tons Cl_2/Hour
1700	20	282	93	8.14
1800	20	282	93	8.14
1900	20	281	93	8.12
2000	20	282	93	8.14
2100	20	282	93	8.14
2200	20	282	93	8.14
2300	20	282	93	8.14
2400	20	282	93	8.14
0100	20	282	93	8.14
0200	20	282	93	8.14
0300	20	282	93	8.14
0400	20	282	93	8.14
0500	20	283	93	8.17
0600	19	281	87	7.21
0700	19	281	87	7.21
0800	19	280	87	7.19
0900	18	280	84	6.57
1000	18	280	84	6.57
1100	18	280	84	6.57
1200	18	280	84	6.57
1300	19	280	87	7.19
1400	19	280	87	7.19
1500	19	280	87	7.19
1600	20	280	93	8.09

Total Cl_2 Production During Cycle = 183 tons

Mean Cl_2 Production Rate During Cycle = 7.64 tons/hr

Standard Deviation of Cl_2 Production Rate $\approx$ 0.62 tons/hr

Table III-3. CHLORINE PRODUCTION RATES

Date: September 26-27, 1974

Test Cycle: No. 3

Time	No. of Cells	Total Amperes x 10^{-3}	Total Volts (DC)	Tons Cl_2/Hour
1700	20	280	93	8.09
1800	20	280	93	8.09
1900		Plant Down		
2000	20	180	79	4.42
2100	20	281	93	8.12
2200	20	282	93	8.14
2300	20	282	93	8.14
2400	20	282	93	8.14
0100	20	282	93	8.14
0200	20	282	93	8.14
0300	20	282	93	8.14
0400	20	282	93	8.14
0500	20	282	93	8.14
0600	20	282	93	8.14
0700	20	282	93	8.14
0800	20	282	93	8.14
0900	20	282	93	8.14
1000	19	280	88	7.27
1100	19	280	88	7.27
1200	19	280	88	7.27
1300	20	200	85	5.28
1400	20	280	93	8.09
1500	20	282	94	8.23
1600	20	281	93	8.12

Total Cl_2 Production During Cycle = 178 tons (approximated due to plant shutdown)

Mean Cl_2 Production Rate During Cycle = 7.74 tons/hr

Standard Deviation of Cl_2 Production Rate = 0.94 tons/hr

Table III-4. CHLORINE PRODUCTION RATES

Date: September 27-28, 1974

Test Cycle: No. 4

Time	No. of Cells	Total Amperes x 10^{-3}	Total Volts (DC)	Tons Cl_2/Hour
1700	20	281	93	8.12
1800	20	280	93	8.09
1900	20	280	93	8.09
2000	20	281	93	8.12
2100	20	281	93	8.12
2200	20	282	93	8.14
2300	20	282	93	8.14
2400	20	282	93	8.14
0100	20	282	93	8.14
0200	20	282	93	8.14
0300	20	282	93	8.14
0400	20	282	93	8.14
0500	20	282	93	8.14
0600	20	282	93	8.14
0700	20	281	93	8.12
0800	20	280	93	8.09
0900	20	281	93	8.12
1000	20	280	93	8.09
1100	20	280	93	8.09
1200	20	280	93	8.09
1300	20	280	93	8.09
1400	20	280	93	8.09
1500	20	280	93	8.09
1600	20	280	93	8.09

Total Cl_2 Production During Cycle = 195 tons

Mean Cl_2 Production Rate During Cycle = 8.12 tons/hr

Standard Deviation of Cl_2 Production Rate = 0.023 tons/hr

Table III-5. CHLORINE PRODUCTION RATES

Date: September 28-29, 1974

Test Cycle: No. 5

Time	No. of Cells	Total Amperes x 10^{-3}	Total Volts (DC)	Tons Cl_2/Hour
1700	20	280	93	8.09
1800	20	280	93	8.09
1900	20	280	93	8.09
2000	20	280	93	8.09
2100	20	280	93	8.09
2200	20	280	93	8.09
2300	20	280	93	8.09
2400	20	280	93	8.09
0100	20	280	93	8.09
0200	20	280	93	8.09
0300	20	280	93	8.09
0400	20	280	93	8.09
0500	20	280	93	8.09
0600	20	280	93	8.09
0700	20	280	93	8.09
0800	20	280	93	8.09
0900	20	280	93	8.09
1000	20	280	93	8.09
1100	20	280	93	8.09
1200	20	280	93	8.09
1300	20	280	93	8.09
1400	20	280	93	8.09
1500	20	280	93	8.09
1600	20	280	93	8.09

Total Cl_2 Production During Cycle = 194 tons

Mean Cl_2 Production Rate During Cycle = 8.09 tons/hr

Standard Deviation of Cl_2 Production Rate $\doteq$ 0

It is imperative to realize that the actual mercury-cell process parameters do not appreciably affect the mercury concentration or the hydrogen flow rate to the PuraSiv Hg unit. Obviously, the rate of chlorine production determines the amount of by-product hydrogen production which in turn determines the total quantity of mercury fed to the decomposer. However, between the decomposer and the adsorbent are two coolers, a centrifugal separator, and two demisters. These units are designed to remove liquid mercury droplets and mist so that the hydrogen entering the adsorber contains only vaporized mercury. This pretreatment system acts as a buffer between the adsorption system and the mercury-cell process, resulting in relatively constant (6 to 10 mg/Nm^3) mercury concentrations at the adsorber inlet.

The adsorber inlet flow rate is also essentially independent of cell-room process conditions. By varying the amount of recycled hydrogen, the positive-displacement blower is able to maintain a nearly constant inlet flow rate to the adsorbent. (During the testing program, inlet flow variation was less than 10%.) Because both the flow rate and the mercury concentration entering the adsorber are not affected by cell-room operating conditions, extensive process data acquisition was not deemed necessary to the successful execution of the testing program.

In addition, it was beyond the scope of this test program to ascertain the influences of the PuraSiv Hg operating parameters. The adsorption process variables were fixed and controlled throughout the duration of the test period in accordance with the plant's normal operating procedure. Because no deviations from normal operating conditions were encountered, evaluation of the effect of adsorption process variables on adsorbent performance was not possible.

SECTION IV

SAMPLING AND ANALYTICAL PROCEDURES

At the coordination meeting held at the plant site on the first day of testing, representatives of Battelle-Columbus Laboratories expressed their opinion that isokinetic sampling of the inlet was necessary. Battelle was interested in the testing because the results will be used by Battelle in the performance of an associated Control Systems Laboratory contract. The necessity to sample isokinetically is dependent upon the presence of mercury particles. Although equilibrium data predicts no particles, the attainment of equilibrium within the system could neither be proved or disproved to the satisfaction of those concerned.

Since isokinetic sampling of the inlet had not been planned, no provisions had been made to install sample ports as specified by Method 102, nor did any such sample port location exist that would permit sampling of two complete duct traverses. To achieve such capability would have required the fabrication and installation of special piping. A complete plant shutdown, including a nitrogen purging of all hydrogen lines, would have been necessary for installation of the piping. For obvious reasons, the plant was not interested in this approach. Therefore, a compromise was reached to do a partial sampling traverse with an existing probe and pitot tube which were located between the Brink demister and the preheater. The EPA Project Officer agreed to this modification of the Work Plan as well as the necessary modifications to Method 102 which are described in this section.

LOCATION OF SAMPLING PORTS

As stated, the inlet sampling site used for this test was an existing sample port complete with a probe and pitot tube previously

installed for a Union Carbide test program. The port consisted of a 4-inch flanged pipe nozzle installed in a straight run of 6-inch inlet pipe within the compressor room. There was a straight, unobstructed run of pipe for a distance of 8 feet and 6 inches upstream of the sample port, and, likewise, a straight run of pipe for a distance of 8 feet and 4 inches downstream of the port. A schematic diagram of the sample port location is contained in Figure IV-1. A detailed sketch of the probe and pitot tube assembly showing their relative positions and the location of the traverse points is also provided in Figure IV-1. The pitot tube was a stainless steel Dwyer "pocket" model with a 1/8-inch outside diameter. Calibration of this pitot tube in the laboratory subsequent to the test program yielded a pitot coefficient factor of 0.99. The sample probe was a scaled-down version of the more familiar "standard size" button-hook nozzle/probe assembly and was fabricated from 0.12-inch I.D. stainles steel tubing. Traverse points were located as specified by EPA Method 102. The inlet sampling location easily exceeded the minimum requirements of being eight stack diameters downstream and two stack diameters upstream from any flow disturbance. Thus, a minimum total of four traverse points, two points on a diameter, were required. Due to the limited length of the probe and pitot tube, any sample points on the diameter past the centerline could not be reached. There was no alternate equipment available to be used to resolve this situation. Thus, two points on the one-half diameter were chosen. The specified location of Point No. 1 was located less than 1 inch from the stack wall; thus in accordance with the Method, traverse Point No. 1 was located at 1.0 inch. Point No. 2 was located at 1.5 inches from the stack wall.

It should be noted that, due to the presence of the Swagelok fitting on the probe assembly, the probe could be traversed from the wall to the centerline of the pipe. However, the compression fitting on

FIGURE IV-1. LOCATION OF INLET SAMPLING PORT AND DETAIL OF PROBE AND PITOT TUBE ASSEMBLY

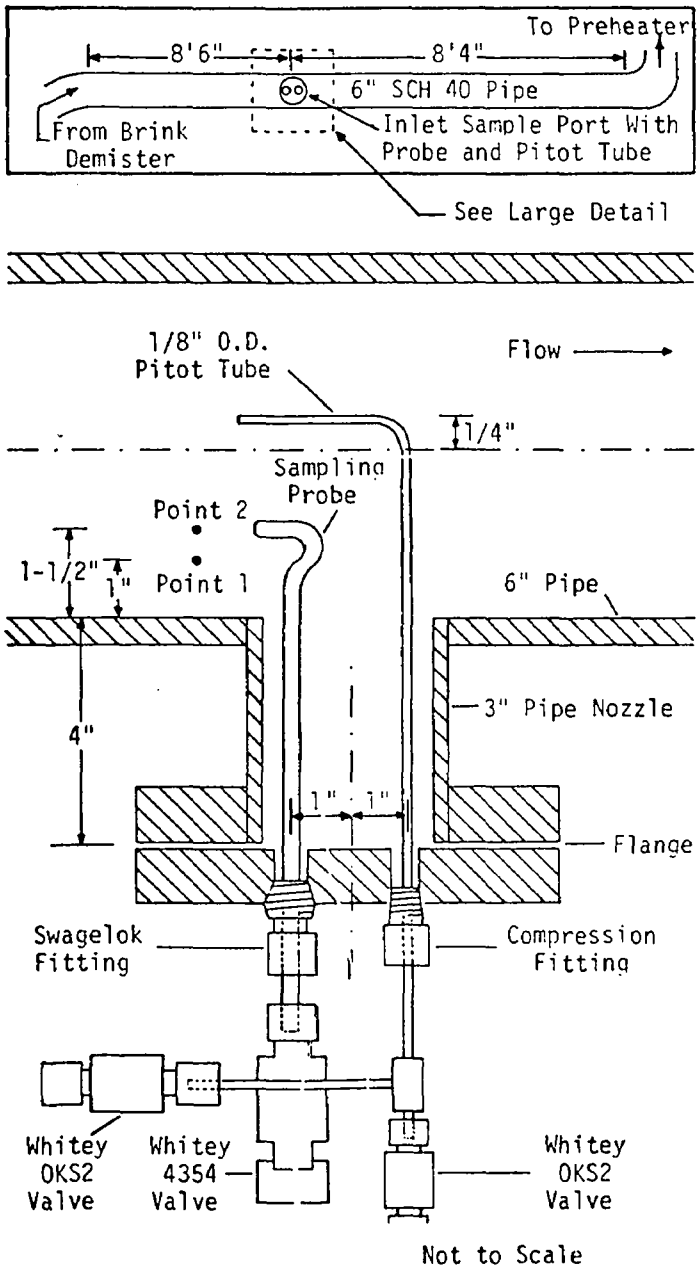

the pitot tube assembly required the pitot tube to remain stationary at 1/4-inch beyond the pipe centerline. As shown later in this section, a velocity traverse was performed on the one-half diameter that was accessible. However, this was done under the presence of leaking hydrogen caused by removing the pitot tube fitting from the flanged pipe; this condition would have been intolerable for the duration of the test program.

Because the two adsorption beds are alternated in service between adsorption and regeneration, the two units are connected via a manifold in such a manner that the treated hydrogen stream exiting from the on-line adsorber provides both the hydrogen used for regeneration of the second adsorber, as well as the hydrogen stream to be used for combustion, recycle, or simply vented. It is this latter hydrogen stream, referred to as the adsorber "outlet" which was sampled during the test period. A schematic diagram of this manifold arrangement and the location of the sampling site for the "outlet" is shown in Figure IV-2.

The existing sample tap was a 1/2-inch pipe nipple installed in the 6-inch "outlet" pipe approximately 3 feet downstream of the manifold takeoff and 9 feet upstream of any flow disturbance. From this sample tap, 1/4-inch O.D. stainless steel tubing traverses 4 feet horizontally to the side of adsorber A-1 and then down the side of the adsorber for another 9 feet, terminating at a valve. The sample train was connected with a 4-foot length of Teflon tubing to a Swagelok fitting at the valve, and all "outlet" samples were collected through this connection to the existing sample tap.

SAMPLING PROCEDURES

The expected magnitude of the inlet flow rate within the small diameter pipe indicated the possibility of a high Reynolds Number with the associated high degree of turbulence and flat velocity

FIGURE IV-2. LOCATION OF OUTLET SAMPLING

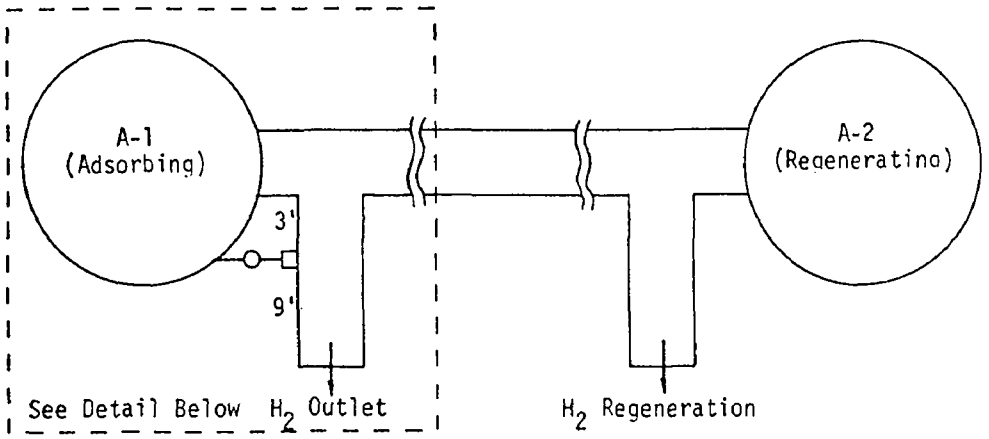

TOP VIEW

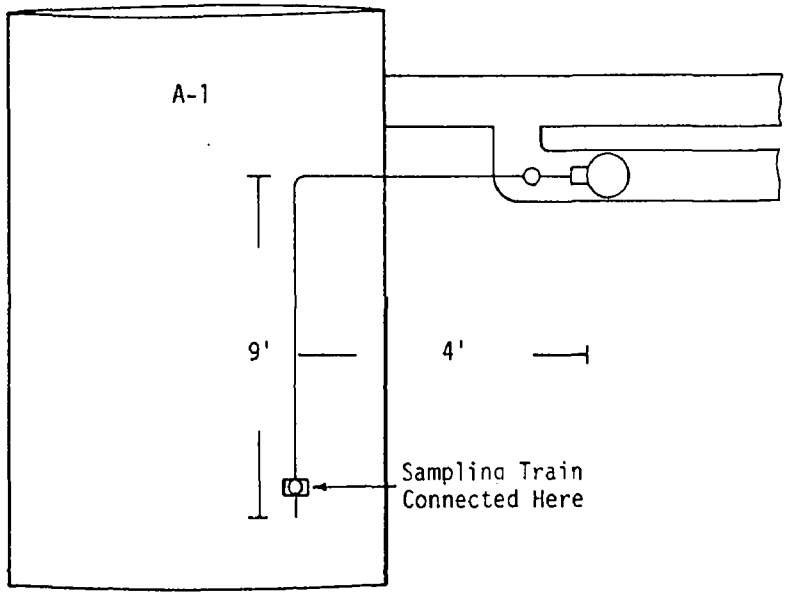

SIDE VIEW

profile. A velocity traverse with the existing pitot tube confirmed these expectations, shown below.

Distance from Wall	Δp	Stack Temp., °C
1/2"	0.58	22
1"	0.59	22
1-1/2"	0.58	22
2"	0.58	22
2-1/2"	0.59	22
3"	0.59	22

As noted, due to the design of the existing pitot tube and probe, only half of the diameter could be traversed. That half of the diameter on the side away from the sampling port was inaccessible because of the limited length of probe and pitot tube.

Because this flat velocity profile existed at a high Reynolds Number, the inlet gas stream would be expected to be extensively mixed, i.e., a homogeneous gas phase with no segregation of particulate matter in any specific region of the duct. Therefore, the composition of the stream in the inaccessible portion of the duct should be identical to the gas stream on the one-half of the diameter available for sampling. Hence, the collected samples are believed to be a true representation of the composition of the adsorber inlet stream.

Sampling of the adsorber inlet stream was conducted in accordance with the test procedures as specified in the aforementioned EPA Method 102, using the standard sampling train of that method as described in Appendix F, with the following modifications:

a. The pitot tube and probe varied in design from those prescribed by Method 102 and permitted a traverse of only one-half of the duct diameter.

b. A section of Teflon tubing with a Swagelok fitting on one end and a ground-glass socket on the other end was employed to

connect the existing probe to the inlet of the first impinger. A Whitey needle valve was also installed in this section of Teflon tubing.

c. Since the stream to be sampled was under positive pressure, the vacuum pump in the sampling train was by-passed and the sample was simply pushed through the sampling train. The needle valve as described above was used to regulate the sampling flow rate.

Isokinetic sampling runs were conducted on the adsorber inlet stream for a period of two hours. Readings were taken every five minutes and the probe was alternated between the two traverse points every 10 minutes.

The adsorber outlet stream was sampled simultaneously over a two-hour period in accordance with the specifications of EPA Method 102, using the standard sampling train as described in Appendix F. The following modifications were made to those procedures when sampling the adsorber outlet stream:

a. No probe or pitot tube was used since the adsorber outlet stream was completely gaseous. Consequently, no point-by-point traverse was required.

b. A section of Teflon tubing, similar to the one used for the inlet stream sampling, was employed to connect the sample tap to the first impinger.

c. The vacuum pump was by-passed and the sample was allowed to push itself through the sampling train. The sample rate was regulated by adjusting the Whitey needle valve in the section of Teflon tubing.

In the cases of both inlet and outlet streams, by adopting the described modifications, there is no reason to expect less accuracy in the results than that normally obtained by Method 102. In the

case of the inlet stream, insertion of the "standard size" probe and S-type pitot tube into the 6-inch diameter sample duct would have created flow disturbances which would have resulted in erroneous measurements. Utilization of the miniature probe and pitot tube, as described, most probably prevented a possible source of error. Because isokinetic sampling rates were not a critical factor in determination of the mercury concentrations (as detailed in Section V), the accuracy in measurement of the sampled gas volume, corrected to normal conditions, represents the accuracy of the sampling train. Because the test instruments used to determine the sample gas volume at standard conditions were either calibrated prior to field testing and/or the accuracy of the instruments were known, based upon the contractor's prior experience with Method 102 and other related Methods, it is estimated that sampling train results differed no more than $\pm$ 5% from the actual values.

During the 2-hour sampling periods of the adsorber outlet stream, readings were also taken every five minutes. Sample flow rates were maintained at approximately 1 cfm throughout the runs. The field data sheets indicating what sampling parameters were monitored for all sampling runs are contained in Appendix G.

At the completion of the 2-hour simultaneous samplings of the inlet and outlet streams, the sample boxes were disconnected at the outlet from the fourth impinger and at the Swagelok fitting at the sample tap. Sample recovery was performed, as prescribed in the aforementioned EPA Method 102, with one additional step. The Teflon tubing from each train was also rinsed with 0.1M ICl and the washings were added to the recovered sample of the inlet and outlet, respectively. This tubing was likewise cleaned with a distilled water wash along with the impingers and other glassware prior to preparation of a new sampling train. The field cleanup data sheets for all sampling runs are contained in Appendix H.

All sample recovery, glassware cleaning, and sample train preparation were performed in a covered van located at the rear of the plant's office building parking lot. This location was situated upwind of the prevailing wind direction from the plant proper, approximately 150 meters from the nearest mercury emission source. Checks of the mercury level inside the cleanup van were made with Drager tubes having a lower limit of detectability of 0.005 ppm by volume. These tests showed no detectable mercury.

There were no sampling equipment failures experienced during the six days of testing. There was, however, one plant upset which occurred on the evening of September 26 which involved a plant shutdown. This event necessitated the curtailment of the simultaneous sampling run in progress at that time and also required shortening the sampling period of the subsequent simultaneous sampling run in order to remain in phase with the 24-hour cycles of the adsorbers, which were still scheduled to be switched at 5:00 p.m. on the following day.

In addition to recording the standard sampling data as specified by Method 102, certain process data relevant to the PuraSiv Hg operation were monitored at 5-minute intervals as well. Those process parameters of interest were the following:

a. gas flow rate to the on-line adsorber;

b. regeneration gas flow rate to the off-line adsorber;

c. adsorber inlet pressure after preheater;

d. adsorber outlet pressure;

e. gas temperature near the inlet sampling site, i.e., downstream of the secondary cooler but upstream from the Brink demister;

f. gas temperature at the preheater outlet; and

g. adsorber inlet pressure before preheater.

Recordings of this data were incorporated into the standard field data sheets which are contained in Appendix G. The instruments and gauges used to obtain these readings are described in Appendix I. These instruments were all permanently installed in the various process lines by the plant. For this reason, calibration of the instruments could not be conducted by the test team. Because of the positive pressure in the system and the lack of necessary taps in the piping, the tests were conducted utilizing the existing plant instrumentation.

ANALYTICAL PROCEDURES

Upon receipt of the recovered samples at the laboratory, the samples were analyzed spectrophotometrically for mercury content as specified in EPA Method 102. The following modifications of Method 102 were used:

a. Flameless spectrophotometric analysis for mercury content is extremely sensitive for mercury detection. In addition, the specified mercury concentration range for the standard solutions is quite high, since at that concentration range the calibration curve obtained is extremely flat. Such a calibration curve renders a poor resolution between two slight concentration differences. Therefore, in order to improve resolution, the mercury concentrations of the standard solutions were lowered by dilution with 0.1M ICl and the samples were analyzed at levels of 1 to 5 μg/l of Hg. Not only did this procedure improve the resolution, but also less scrubbing time was required and system contamination and "memory" were decreased.

b. The scrubber solution volume was increased to 200 ml in order to improve repeatability.

c. The normal method of spectrophotometric analysis utilizes a quartz glass cell through which the sample flows during

absorbency measurement. This frequently results in the "windows," i.e., the two ends, of the quartz tube becoming contaminated with mercury and analytical errors occurring due to this interference. Because the flameless atomic absorption analytical technique is extremely sensitive for mercury detection, the need to eliminate any and all possible sources of interference is obvious. In order to resolve this situation, a special windowless quartz glass cell was employed for the mercury analysis of this test program. As shown in Figure IV-3, the mercury-laden zero grade air from the scrubber flask enters at the center of the quartz tube and flows toward both open ends. While the sample is flowing within the tube, the absorbency can be measured accurately without the possible interference of "dirty" cell windows. This modification also allows easier intermittent cleaning of the quartz cell. In addition, the exhaust hood was lowered closer to the cell in order to improve suction around the cell.

There are no known literature references or other written documentation demonstrating or negating the validity of this windowless cell procedure. The method was developed independently by subcontractor personnel who possessed prior experience in the analysis of mercury by flameless atomic absorption (FAA). Prior to the analyses of the samples collected from this test program, the windowless cell technique was demonstrated by using an EPA reference sample obtained from the Analytical Quality Control Laboratory, National Environmental Research Center, U.S. Environmental Protection Agency in Cincinnati, Ohio. The "known" value of the mercury concentration in this reference sample was 2.40 μg/l. The measured value of the mercury concentration in that sample when using the windowless cell method was 2.76 μg/l. Personnel associated with the above Analytical Quality Control Laboratory indicated that FAA results for mercury analysis may vary by as much as ± 50% from the "known" value when employing

FIGURE IV-3. WINDOWLESS GAS CELL USED IN ANALYSIS

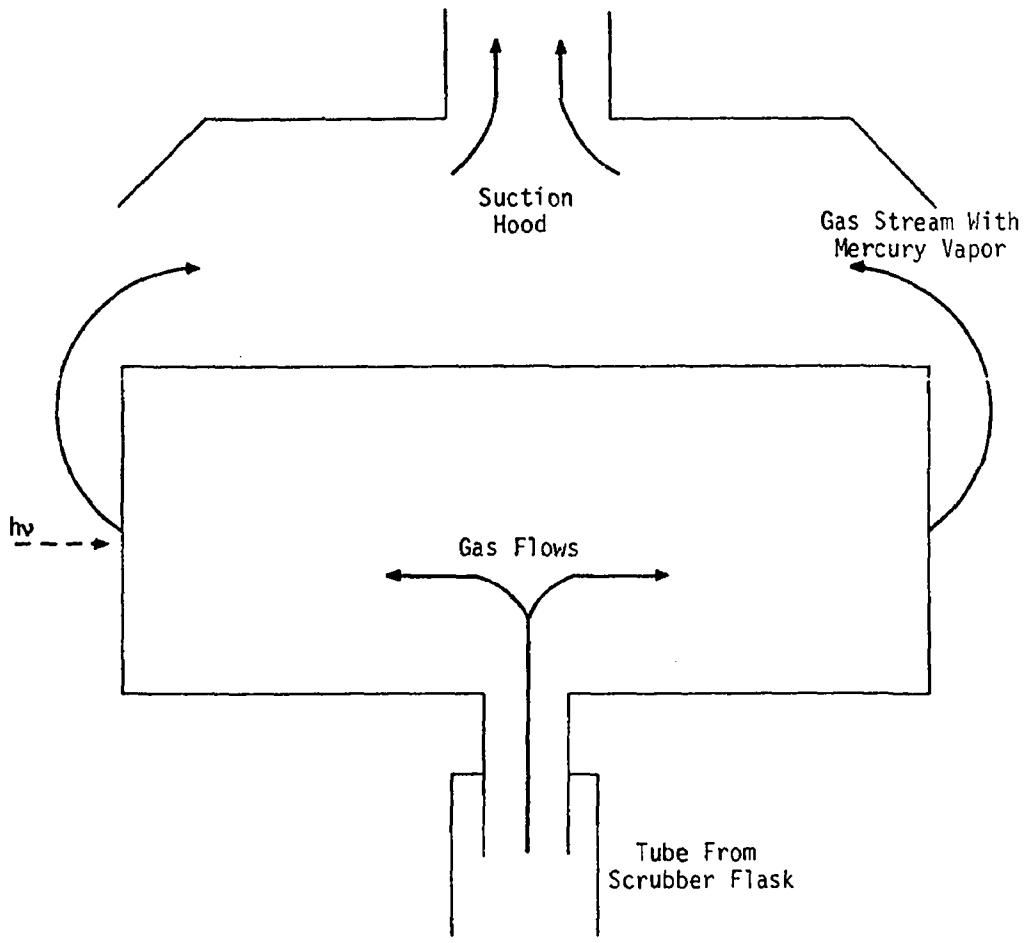

the conventional single-pass FAA procedure at low concentrations of mercury (<10 μg/l).* The result obtained with the windowless cell should provide some indication of the reliability of that method under the analytical conditions described for this test program.

d. Possible background readings attributable to entrained particles and/or water vapor were decreased by employing a Kjeldahl bulb "condenser," submerged in an ice bath, between the scrubber flask and the gas cell.

e. A recent collaborative test program has shown that the analytical procedure as contained in Method 102 may not provide reproducible accurate results when analyzing samples obtained from mercury-cell chlor-alkali plants.** Test results, published subsequent to the laboratory analyses of this project, showed that accurate and reproducible mercury determinations were obtained only when analyzing the samples at mercury concentration levels of 0.2 to 5.0 μg/l. Fortunately, this was one of the modifications of Method 102 employed in this test program. In the above-mentioned collaborative test program, mercury analyses employing the mercury concentration range of 0.2 to 5.0 μg/l demonstrated an accuracy of less than 1% difference between actual and measured concentrations. Therefore, because the analytical procedures of that program are so similar to the actual practices used for this test, the analytical results obtained from this test program are estimated to be no more than ± 2% of the actual mercury contents.

---

*Personal communications from analytical chemists at Analytical Quality Control Laboratory, U.S. Environmental Protection Agency, Cincinnati, Ohio. March 1975. Engineering-Science, Inc. McLean, Virginia.

** "Evaluations of the EPA Method for the Determination of Mercury Emissions from Stationary Sources," Mitchell, W. J. and Midgett, M. R., Quality Assurance and Environmental Monitoring Laboratory, U. S. Environmental Protection Agency, October, 1974.

A detailed description of the analytical procedures and the laboratory report are contained in Appendix F and Appendix J, respectively.

In order to obtain the required mercury concentration range of 1 to 5 μg/l, special dilution procedures were needed. All "prepared samples" were made by adding 10 ml of 10N NaOH to a 50 ml aliquot of the sample returned from the field. In all analyses, the total volume of solution charged to the aeration scrubber was 200 ml. In making the scrubber solutions for the adsorber outlet samples, the following quantities were used: (1) 10 ml 10N NaOH; (2) 20 ml standard Method 102 reducing agent; (3) 120 ml distilled water; and (4) 50 ml of the "prepared sample." However, the scrubber solutions for the adsorber inlet samples were made up on an individual sample-by-sample basis, in order to achieve a Hg concentration in the 1 to 5 μg/l working range. In all cases, 10 ml 10N NaOH and 20 ml of the reducing agent were added. By employing a microsyringe, only a few microliters of the inlet "prepared sample" were then added and the volume was diluted to 200 ml total with distilled water. If the resultant solution was found to have a Hg concentration greater than 5 μg/l, the scrubber solution for that particular sample was made up again using fewer microliters of the "prepared sample" for that run.

SECTION V

DISCUSSION OF RESULTS

In order to determine the extent of mercury removal by the proprietary PuraSiv Hg process, source sampling was conducted on this system during a period of five consecutive 24-hour adsorption cycles. Throughout the duration of each of these cycles, a series of eight distinct sampling tests were executed simultaneously on the adsorber feed and discharge streams. The test data obtained permitted calculation of the mercury concentrations and mercury mass flow rates to and from the adsorption unit at specific periods of the adsorption cycle. The results, as well as the mercury removal efficiency of the PuraSiv Hg unit, are tabulated separately for each of the five adsorption cycles tested as shown in Tables V-1 through V-5.

All mercury concentrations as determined by the sample concentration method and all gas flow rates are calculated at standard conditions (760 mm Hg, 21.1°C). Descriptions of the sample concentration method of calculation and of the ratio-of-area method of calculation are contained in Appendix A. Mercury mass flow rates for the inlet stream were calculated using the appropriate mercury concentration and gas flow rate as determined by the pitot tube measurements at the inlet sampling site. The mercury mass flow rates for the outlet stream were calculated in the same manner after the outlet flow rate was determined by subtracting the regeneration gas flow rate from the total inlet flow rate. Example calculations of mercury concentration and mass flow rate for both streams are contained in Appendix B.

It should be noted that the adsorber outlet referenced in Tables V-1 through V-5 is not the total flow discharging from the adsorber. As detailed in Section III, the total "clean" hydrogen gas from the adsorber is separated via manifold piping into the outlet

Table V-1. PURASIV HG MERCURY CONTROL PERFORMANCE SUMMARY

September 24-25, 1974

Cycle No. 1: 24-hours duration

Adsorber A

Hour of Adsorption Cycle	Hg Concentration, mg/Nm^3 Inlet	Hg Concentration, mg/Nm^3 Outlet	Hg Flow Rate, mg/hr Inlet	Hg Flow Rate, mg/hr Outlet	Hg Control Efficiency,%	Chlorine Produc. Rate, tons/hr
0 - 2	7.98	0.459	33,300	1,670	94.2	8.14
3.25 - 5.25	7.78	0.026	33,200	97	99.7	8.09
6.5 - 8.5	7.26	<0.001	31,600	4	99.9	8.09
9.67 - 11.67	7.46	0.002	31,800	7	99.9	8.06
12.5 - 14.5	9.50	<0.001	43,500	4	99.9	8.06
15.75 - 17.75	10.10	0.009	42,100	33	99.9	8.06
18.67 - 20.67	7.94	0.795	32,800	2,850	90.0	8.06
22 - 24	8.00	3.56	32,400	12,500	55.4	8.07

Average Hg Collection Efficiency During Cycle = 92.4%

Total Hg in Feed Stream During Cycle = 691 g

Total Maximum Hg Discharge During Cycle = 47 g

NOTE: Nm^3 is defined as one normal cubic meter, i.e., one cubic meter at standard conditions of 760 mm Hg and 21.1°C.

Average Hg Collection Efficiency During Cycle has been calculated as the mean value of the individual efficiencies for each sampling period. This value is not based on the total Hg in and out of the sieve during an adsorption cycle.

Table V-2. PURASIV HG MERCURY CONTROL PERFORMANCE SUMMARY

September 25-26, 1974

Cycle No. 2: 24-hours duration

Adsorber B

Hour of Adsorption Cycle	Hg Concentration, mg/Nm^3 Inlet	Hg Concentration, mg/Nm^3 Outlet	Hg Flow Rate, mg/hr Inlet	Hg Flow Rate, mg/hr Outlet	Hg Control Efficiency, %	Chlorine Produc. Rate, tons/hr
0 - 2	8.09	0.476	33,400	1,710	94.1	8.13
3 - 5	7.91	0.486	32,600	1,740	93.8	8.14
5.75 - 7.75	7.01	0.003	28,600	11	99.9	8.14
9 - 11	6.97	0.002	28,500	7	99.9	8.14
12 - 14	6.96	0.002	28,300	7	99.9	7.53
15 - 17	7.52	0.003	30,600	11	99.9	6.78
18 - 20	8.22	0.219	32,600	750	97.3	6.78
21 - 23	5.54	3.20	22,300	11,100	42.2	7.49

Average Hg Collection Efficiency = 90.9%

Total Hg in Feed Stream During Cycle = 712 g

Total Maximum Hg Discharge During Cycle = 51 g

NOTE: Nm^3 is defined as one normal cubic meter, i.e., one cubic meter at standard conditions of 760 mm Hg and 21.1°C.

Average Hg Collection Efficiency During Cycle has been calculated as the mean value of the individual efficiencies for each sampling period. This value is not based on the total Hg in and out of the sieve during an adsorption cycle.

Table V-3. PURASIV HG MERCURY CONTROL PERFORMANCE SUMMARY

September 26-27, 1974

Cycle No. 3: 22.25-hours duration

Adsorber A

Hour of Adsorption Cycle	Hg Concentration, mg/Nm^3 Inlet	Hg Concentration, mg/Nm^3 Outlet	Hg Flow Rate, mg/hr Inlet	Hg Flow Rate, mg/hr Outlet	Hg Control Efficiency, %	Chlorine Produc. Rate, tons/hr
0 - 1.75	8.73	0.456	36,200	1,640	94.8	8.09
2 - 3.25	6.94	0.016	28,000	56	99.8	8.13
4.25 - 6.25	6.86	0.003	27,900	11	99.9	8.14
7.25 - 9.25	5.86	0.001	24,400	4	99.9	8.14
10.25 - 12.25	6.68	0.001	27,200	4	99.9	8.14
13.25 - 15.25	6.31	0.002	25,400	7	99.9	7.85
16.25 - 18.25	7.28	0.002	29,300	7	99.9	6.61
19.25 - 21.25	7.87	0.067	32,300	240	99.1	8.15

Average Hg Collection Efficiency = 99.2%

Total Hg in Feed Stream During Cycle = 628 g

Total Maximum Hg Discharge During Cycle = 10 g

NOTE: Nm^3 is defined as one normal cubic meter, i.e., one cubic meter at standard conditions 760 mm Hg and 21.1°C.

Average Hg Collection Efficiency During Cycle has been calculated as the mean value of the individual efficiencies for each sampling period. This value is not based on the total Hg in and out of the sieve during an adsorption cycle.

Table V-4. PURASIV HG MERCURY CONTROL PERFORMANCE SUMMARY

September 27-28, 1974

Cycle No. 4: 24-hours duration

Adsorber B

Hour of Adsorption Cycle	Hg Concentration, mg/Nm^3 Inlet	Hg Concentration, mg/Nm^3 Outlet	Hg Flow Rate, mg/hr Inlet	Hg Flow Rate, mg/hr Outlet	Hg Control Efficiency, %	Chlorine Produc. Rate, tons/hr
0 - 2	7.83	0.039	32,300	140	99.5	8.10
3 - 5	6.03	0.002	24,900	7	99.9	8.13
6 - 8	7.24	0.001	31,100	4	99.9	8.14
9 - 11	7.65	0.001	34,000	4	99.9	9.14
12 - 14	6.52	0.001	28,400	4	99.9	8.13
15 - 17	6.88	0.001	29,300	4	99.9	8.10
18 - 20	7.77	0.030	33,400	110	99.6	8.09
21 - 23	8.86	0.996	37,500	3,670	88.8	8.09

Average Hg Collection Efficiency = 98.4%

Total Hg in Feed Stream During Cycle = 653 g

Total Maximum Hg Discharge During Cycle = 18 g

NOTE: Nm^3 is defined as one normal cubic meter, i.e., one cubic meter at standard conditions 760 mm Hg and 21.1°C.

Average Hg Collection Efficiency During Cycle has been calculated as the mean value of the individual efficiencies for each sampling period. This value is not based on the total Hg in and out of the sieve during an adsorption cycle.

Table V-5. PURASIV HG MERCURY CONTROL PERFORMANCE SUMMARY

September 28-29, 1974

Cycle No. 5: 24-hours duration

Adsorber A

Hour of Adsorption Cycle	Hg Concentration, mg/Nm^3 Inlet	Hg Concentration, mg/Nm^3 Outlet	Hg Flow Rate, mg/hr Inlet	Hg Flow Rate, mg/hr Outlet	Hg Control Efficiency, %	Chlorine Produc. Rate, tons/hr
0 - 2	10.3	0.310	43,100	1,120	97.0	8.09
3 - 5	8.74	0.002	36,400	7	99.9	8.09
6 - 8	10.5	0.002	43,600	7	99.9	8.09
9 - 11	9.75	0.001	40,000	4	99.9	8.09
12 - 14	9.57	0.001	39,300	4	99.9	8.09
15 - 17	10.2	0.001	41,000	3	99.9	8.09
18 - 20	8.77	0.091	35,400	310	99.0	8.09
22 - 24	9.49	3.53	37,700	12,000	62.8	8.09

Average Hg Collection Efficiency = 94.8%

Total Hg in Feed Stream During Cycle = 946 g

Total Maximum Hg Discharge During Cycle = 40 g

NOTE: Nm^3 is defined as one normal cubic meter, i.e., one cubic meter at standard conditions 760 mm Hg and 21.1°C.

Average Hg Collection Efficiency During Cycle has been calculated as the mean value of the individual efficiencies for each sampling period. This value is not based on the total Hg in and out of the sieve during an adsorption cycle.

stream and the regeneration stream. The regeneration hydrogen stream is an integral part of the PuraSiv Hg process and is eventually recycled to the inlet of the process. The outlet stream is subsequently divided into recycle (but not regeneration) gas, boiler combustion gas and/or vent gas to the atmosphere. Although actual plant operating conditions currently provide for recycling, approximately 28% of the total outlet hydrogen, the mercury emissions for a given cycle are calculated on the basis of maximum possible emission from the adsorption unit, i.e., no recycle hydrogen requirements, no hydrogen combustion, but instead venting of all hydrogen (except that required for regeneration) directly to the atmosphere. This procedure permits a more realistic evaluation of the PuraSiv Hg performance in lieu of a determination of the actual mercury emission from the plant.

Obviously, the outlet stream and regeneration stream have identical mercury concentrations upon initial discharge from the adsorber as one stream. This permits calculation of the mercury removal efficiency on the basis of adsorber inlet and outlet mercury concentrations. Collection efficiency could just as well be calculated by a mercury mass balance on the adsorption unit, being certain to include the mercury emitted from the adsorber but recycled through the regeneration gas stream.

Measured inlet mercury concentrations ranged consistently from 6 to 10 mg/Nm^3 with the highest concentration measured being 10.5 mg/Nm^3. As shown in Appendix C, at measured stack conditions of 1,108 mm Hg and 21°C, the equilibrium saturation concentration of mercury is calculated to be 14.4 mg/m^3. This saturation concentration when corrected to dry standard conditions is equivalent to 10.9 mg/Nm^3.

The results tabulated in Tables V-1 through V-5 reveal a definite cyclic pattern of the mercury content in the adsorber outlet stream.

During the initial 2 to 4 hours of the adsorption cycles, mercury concentrations approaching 0.5 mg/Nm^3 were measured, after which outlet mercury concentrations at the level of 1 to 2 $\mu g/Nm^3$ were consistently determined. Finally, in the late hours of the adsorption cycle (approximately the 20th hour), "breakthrough" occurs as the adsorbent becomes mercury-laden causing sharp rises in the outlet mercury concentration. Approximately 85% of the mercury discharged from the adsorber during the total cycle occurred during the final four hours of the cycle.

These higher outlet mercury concentrations at the beginning and end of each cycle occur because the plant is currently operating the adsorber system at approximately 145% of design capacity. This additional flow to the adsorbent is due to plant modifications of the blower which increased its capacity in anticipation of future plant expansion. Although plant production has not yet been increased, the quantity of mercury vapor charged to the adsorbent is directly proportional to the inlet hydrogen flow rate, as explained in Section III. Therefore, the total weight of mercury vapor charged to the adsorbent is roughly equivalent to the amount expected from a 280 tons Cl_2/day mercury-cell process. Because the system was not designed to remove this amount of mercury over a 24-hour adsorption cycle, the adsorbent mercury retention capacity is realized prior to the end of the cycle.

Toward the end of a regeneration cycle, the regeneration hydrogen gas is no longer heated but is still passed down through the adsorbent bed to cool the adsorbent for the upcoming adsorption cycle. If "breakthrough" has occurred in the adsorption cycle, this results in deposition of mercury from the "clean" regeneration gas upon the adsorbent of the recently regenerated adsorption bed. Once the regenerated bed enters adsorption service, mercury from the inlet stream is entrapped near the bottom portion of the bed and then

near the top of the bed this "cleaned" hydrogen gas encounters the mercury-laden adsorbent caused by previously cooling the bed with "dirty" hydrogen due to early "breakthrough." The mercury is subsequently stripped from the adsorbent during the initial hours of the adsorption cycle. This explains the appearance of mercury in the outlet stream during the start of the adsorption cycle. It is doubtful if "breakthrough" would occur when operating the adsorption process at design flow rates and, consequently, mercury in the adsorber outlet during cycle start would also not occur.

Due to an accidental plant shutdown on the evening of September 26, Adsorber A was in adsorption service for a total duration of 22.5 hours. This fact explains the relatively low mercury content (0.067 mg/Nm^3 compared to the usual 3.5 mg/Nm^3) in the adsorber outlet at the end of Cycle No. 3. Although "breakthrough" had commenced, the rapid escalation in the mercury discharge during cycle end was avoidable when Adsorber A was switched to regeneration on its routine time schedule. In addition, this occurrence meant that Adsorber B was not cooled with "dirty" regeneration gas and thus low (0.039 mg/Nm^3) mercury concentrations in the outlet stream were measured at the start of Cycle No. 4.

If this particular PuraSiv Hg process were to be operated at or near the actual design capacity, early "breakthrough" and the subsequent rapid rise in mercury emissions near the end of a cycle would be avoided. Furthermore, the "wash out" of mercury during the beginning of an adsorption cycle would not occur since the previously regenerated bed would not have been cooled with "dirty" gas from the adsorber outlet. Therefore, a realistic evaluation of the actual performance capability of this process should exclude the mercury emissions occurring at these two periods in the cycle. A true representation of the outlet mercury concentrations attainable with this system is reflected after initial "wash out" but

prior to excessive "breakthrough" when the mercury concentration is consistently less than 10 $\mu g/Nm^3$. Examination of these results reveals a mean mercury concentration in the adsorber outlet of 2.0 $\mu g/Nm^3$ with a standard deviation of the mean equal to 0.35 $\mu g/Nm^3$. These values result in a 95% confidence limit of the mean of 2.0 ± 0.73 $\mu g/Nm^3$.

Should the PuraSiv Hg unit be operated at 100% of design capacity (49.6 Nm^3/min inlet, 9.1 Nm^3/min regeneration, no recycle), it is estimated that the outlet mercury concentration would average 2.0 $\mu g/Nm^3$ throughout the duration of the 24-hour adsorption cycle at an overall collection efficiency of 99.9%. This would result in a total 24-hour mercury discharge of 0.12 g/day.

Any determination of emission factors for the PuraSiv Hg unit would be misleading as well as impractical since the mercury charged to the adsorber is only indirectly related to the actual rate of chlorine production. In fact, examination of Tables V-1 through V-5 will show that at times mercury charged to the adsorber would increase when chlorine production decreased and vice versa. The amount of mercury that enters the adsorber is actually a function of the production rate, the recycle rate, and the operation of the equipment between the decomposer and the adsorption unit, i.e., the primary cooler, the York demister, the centrifugal knock-out pot, the secondary cooler and the Brink demister. Granted, a "slug" of mercury through this system would most likely result in a higher instantaneous mercury rate to the adsorber, but with the consistent efficiency of the intermediate control devices, the adsorber should be expected to experience more or less the same inlet mercury loadings regardless of the normally small variations in chlorine production rates.

A graphical presentation of the mercury discharged from the adsorber outlet during the different hours of the adsorption cycle, i.e., mg Hg/hr versus cycle hour, would clearly show the cyclic pattern

of the mercury emission rate during the adsorption cycle. However, the magnitude of the range of mercury discharge rates (<10 to >10,000 mg/hr) prevents the construction of any meaningful curve with sufficient detail. Figure V-1 represents an oversimplified version of how such a graph would appear.

Naturally, the nature of the test program did not produce instantaneous mercury mass flow rates required to graphically construct a curve such as Figure V-1. Again, an oversimplification of how the test results would appear, if presented graphically, is shown in Figure V-2. The graph would consist of 8 separate values of the mercury flow rate, each existing for a period of two hours. Between successive mercury flow rates is a void data space representing the hour interval in which no sampling was conducted while sample recovery and sample train preparation were performed. Since the production process was quite steady throughout and the operating parameters of the PuraSiv Hg unit were fixed, any changes in mercury content of the outlet appear to be unidirectional, i.e., a decreasing mercury content declined until it leveled off, after which a rising mercury content at breakthrough continued to escalate rapidly. Therefore, for a first approximation, it would seem reasonable that a mercury flow rate at some time when no sampling was being done can be estimated by linear interpolation. Using this assumption for linear interpolation, addition of the dotted lines in Figure V-2, now completes the description of an adsorption "curve" generated from the actual test results. The area under this "curve" represents the total amount of mercury discharged over a given cycle and this is easily determined through graphical integration. A sample graphical integration procedure is located in Appendix D. Likewise, this same manner of curve construction should be applicable to the mercury flow rates in the inlet stream. The same type of graphical integration was employed to calculate the total mercury charged to an adsorber during a given cycle.

FIGURE V-1. SKETCH OF TYPICAL ADSORPTION CURVE

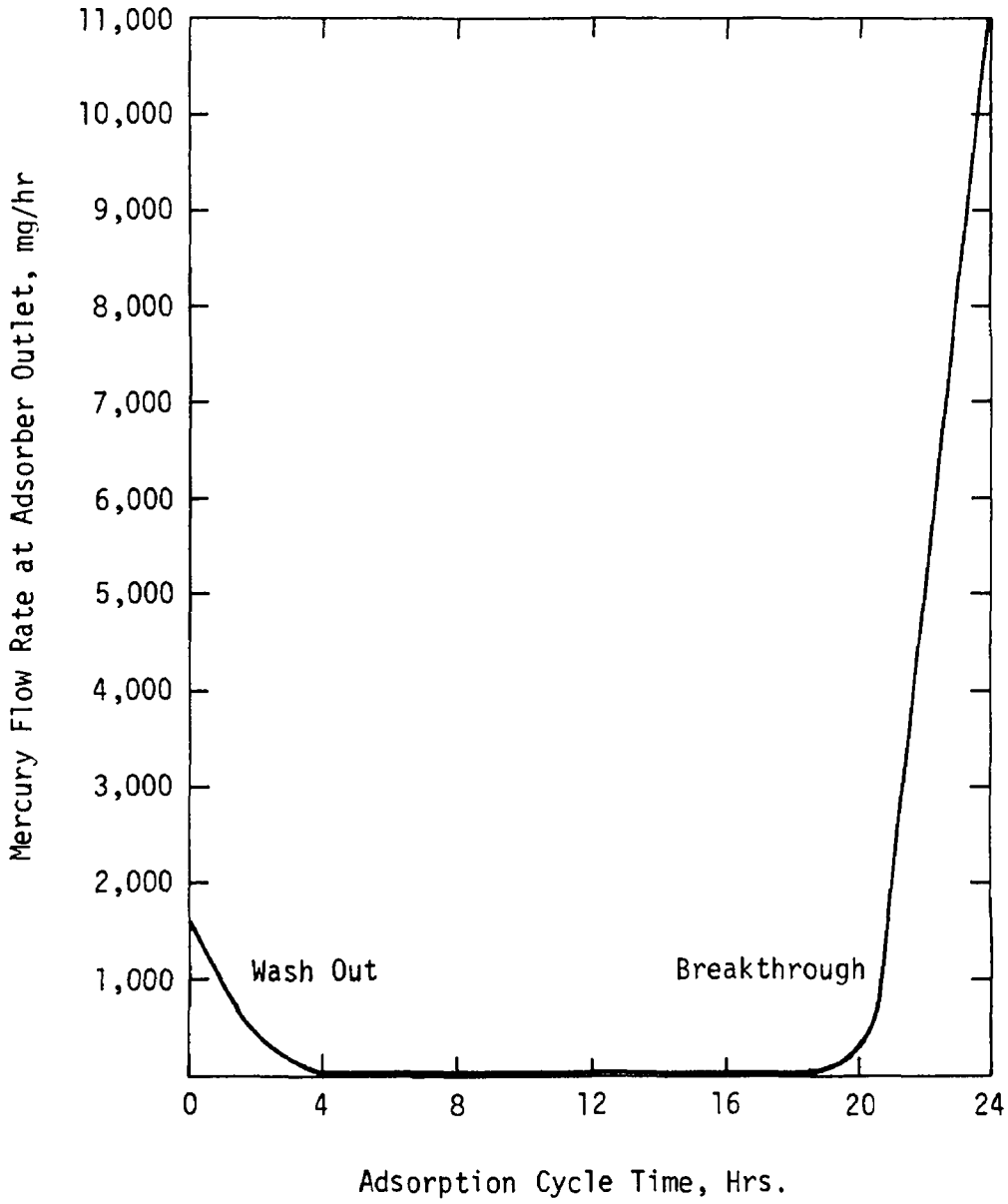

FIGURE V-2. SKETCH OF ADSORPTION CURVE GENERATED FROM TEST DATA - CYCLE NO. 5

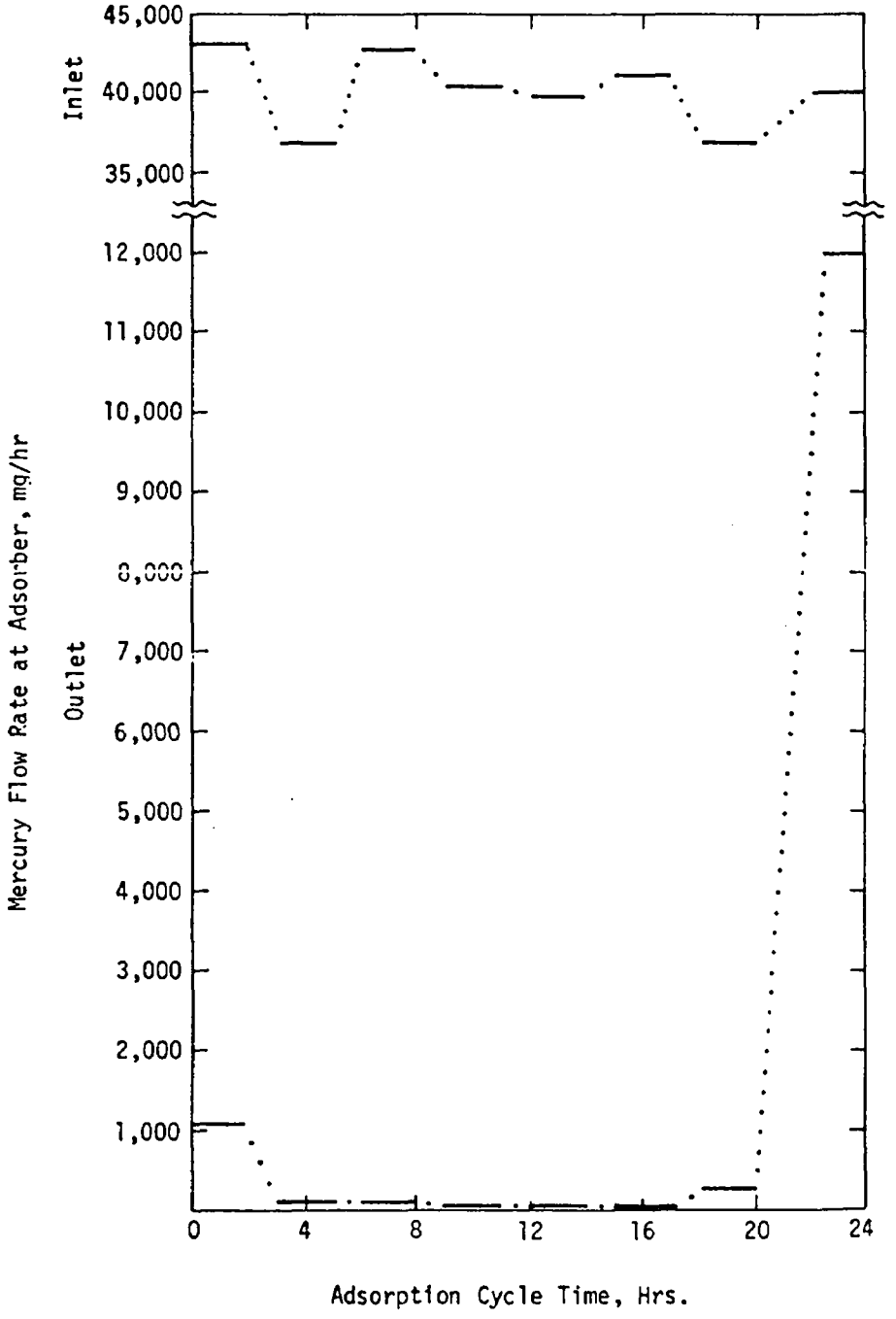

The results for each stream during each of the five cycles is indicated at the bottom of Tables V-1 through V-5, respectively.

Additional summarized results for each sample run conducted on the adsorber inlet stream are presented in Tables V-6 and V-7. Further detailed results and data for each of these runs are contained on individual computer print-out sheets located in Appendix E.

Upon inspection of Tables V-6 and V-7, the initial impulse is to reject all inlet sampling runs on the grounds of unacceptable anisokinetic conditions, i.e., the isokinetic values for all tests range from 76% to 81%. A closer evaluation of the actual test conditions indicates that the isokinetic sampling rate of the inlet stream is not a prime influence on the results obtained.

The consistently low isokinetic values were the result of three problems, all of which were related to the fact that the sampled gas stream was hydrogen rather than air. Accurate estimation of the gas stream moisture content is much more important when the gas is hydrogen than it is when the gas is air. Small errors in moisture content estimation result in much larger errors in the estimated gas stream molecular weight. To establish the nomograph "C" factor, an estimated stack gas moisture content of 3% by volume was obtained from a psychrometric chart. Because the stack static pressure was about 250 mm Hg higher than standard pressure, the value obtained from the psychrometric chart was too high. The actual saturation moisture content at stack conditions was approximately 2%. In an air system, an insignificant sampling rate error would result from using a nomograph set for 3% moisture in a gas stream containing only 2%. In the hydrogen system, however, use of the 3% moisture content estimation resulted in sampling rates that ranged from 3% to 4% lower than would have been obtained if the nomograph had been set up for 2% moisture.

Table V-6. MERCURY INLET DATA SUMMARY (METRIC)

	DRY GAS VOLUME NM3	MOISTURE %	TOTAL CATCH MG	FLOW RATE NM3/MIN	STACK TEMP C	ISO-KINETIC %	CONC MG/NM3	EMISSION G/DAY
SCA-1	2.512	1.64	22.36	70.16	22.2	76.4	8.884	897.42
SCA-3	2.483	1.62	19.85	69.61	22.2	76.1	7.978	799.52
SCA-5	2.595	1.55	20.23	71.05	22.2	77.9	7.780	795.94
SCA-7	2.623	1.37	19.60	72.51	22.2	79.3	7.260	758.13
SCA-9	2.642	1.53	19.75	71.00	22.2	79.4	7.459	762.71
SCA-11	2.623	1.54	24.97	70.89	22.2	79.0	9.500	969.54
SCA-13	2.473	1.49	24.97	69.67	21.7	75.7	10.076	1010.70
SCA-15	2.560	1.72	20.37	68.79	21.7	79.4	7.939	786.35
SCA-17	2.494	1.74	20.00	67.50	21.7	78.8	8.003	777.86
SCA-19	2.528	1.63	20.50	68.86	21.7	78.4	8.092	802.17
SCA-21	2.539	1.66	20.13	68.61	21.7	79.0	7.911	781.52
SCA-23	2.578	1.86	18.11	67.93	21.7	81.0	7.010	685.53
CA-25	2.610	1.85	18.24	68.10	21.7	81.8	6.973	683.64
SCA-27	2.585	1.90	18.02	67.85	21.7	81.3	6.957	679.63
SCA-29	2.532	1.74	19.09	67.81	22.2	79.7	7.525	734.61
SCA-31	2.485	2.19	20.48	65.95	21.1	80.4	8.225	781.01
SCA-33	2.492	1.73	13.82	67.26	22.2	79.1	5.535	535.98
SCA-35	1.538	1.16	13.45	69.12	21.7	76.5	8.727	868.58
SCA-37	1.655	1.75	11.50	67.38	21.3	78.6	6.935	672.74
SCA-39	2.514	1.81	17.27	67.85	21.7	79.1	6.856	669.76
SCA-41	2.639	1.88	15.51	69.35	21.7	81.2	5.864	585.49

Table V-6 (continued). MERCURY INLET DATA SUMMARY (METRIC)

	DRY GAS VOLUME NM3	MOISTURE %	TOTAL CATCH MG	FLOW RATE NM3/MIN	STACK TEMP C	ISO-KINETIC %	CONC MG/NM3	EMISSION G/DAY
SCA-43	2.580	1.71	17.27	67.97	21.7	81.0	6.681	653.82
SCA-45	2.476	1.94	15.65	67.04	21.1	78.8	6.308	608.90
SCA-47	2.481	1.88	18.11	67.11	21.1	78.9	7.283	703.70
SCA-49	2.514	1.72	19.83	68.40	21.1	78.4	7.872	775.28
SCA-51	2.533	1.59	19.88	68.64	21.7	78.7	7.832	773.99
SCA-53	2.527	1.70	15.28	68.74	21.7	78.5	6.033	597.14
SCA-55	2.581	1.20	18.73	71.68	21.1	76.8	7.241	747.28
SCA-57	2.660	1.02	20.40	74.05	21.1	76.6	7.652	816.00
SCA-59	2.642	1.51	17.27	72.57	21.1	77.7	6.522	681.48
SCA-61	2.628	1.89	18.11	71.05	21.1	78.9	6.876	703.39
SCA-63	2.617	1.74	20.37	71.68	21.6	77.9	7.768	801.68
SCA-65	2.574	1.59	22.85	70.58	21.7	77.8	8.858	900.17
SCA-67	2.580	1.67	26.71	69.49	21.7	79.2	10.331	1033.61
SCA-69	2.554	1.66	22.36	69.43	21.7	78.5	8.736	873.34
SCA-71	2.557	1.77	26.90	69.17	21.7	78.9	10.498	1045.57
SCA-73	2.587	2.01	25.28	68.36	21.7	80.8	9.750	959.67
SCA-75	2.494	1.64	23.93	68.50	21.9	77.7	9.573	944.22
SCA-77	2.510	2.00	25.65	67.07	21.7	79.9	10.198	984.81
SCA-79	2.446	1.64	21.50	67.29	21.7	77.6	8.772	849.94
SCA-81	2.420	1.89	23.01	66.26	21.7	77.9	9.490	905.36

Table V-7. MERCURY INLET DATA SUMMARY (ENGLISH)

CODE	DRY GAS VOLUME SCF	MOISTURE %	TOTAL CATCH MG	FLOW RATE SCFM	STACK TEMP F	ISO-KINETIC %	CONC GR/SCF	EMISSION LB/DAY
SCA-1	88.701	1.64	22.36	2478.	72.	76.4	0.004	1.98
SCA-3	87.686	1.62	19.85	2458.	72.	76.1	0.003	1.76
SCA-5	91.633	1.55	20.23	2509.	72.	77.9	0.003	1.75
SCA-7	95.113	1.37	19.60	2561.	72.	79.3	0.005	1.69
SCA-9	93.290	1.53	19.75	2508.	72.	79.4	0.004	1.70
SCA-11	92.630	1.54	24.97	2503.	72.	79.0	0.004	2.14
SCA-13	87.330	1.49	24.97	2460.	71.	75.7	0.004	2.23
SCA-15	90.418	1.72	20.37	2429.	71.	79.4	0.003	1.73
SCA-17	88.064	1.74	20.00	2384.	71.	78.8	0.003	1.71
SCA-19	89.283	1.63	20.50	2432.	71.	78.4	0.004	1.77
SCA-21	89.766	1.66	20.13	2423.	71.	79.0	0.003	1.72
SCA-23	91.047	1.86	18.11	2399.	71.	81.0	0.003	1.51
SCA-25	92.186	1.85	18.24	2405.	71.	81.8	0.003	1.51
SCA-27	91.281	1.90	18.02	2396.	71.	81.3	0.003	1.50
SCA-29	89.405	1.74	19.09	2395.	72.	79.7	0.003	1.62
SCA-31	87.749	2.19	20.48	2329.	70.	80.4	0.004	1.72
SCA-33	87.993	1.73	13.82	2375.	72.	79.1	0.002	1.18
SCA-35	54.310	1.16	13.45	2441.	71.	76.5	0.004	1.91
SCA-37	58.438	1.75	11.50	2379.	70.	78.6	0.003	1.48
SCA-39	88.768	1.81	17.27	2396.	71.	79.1	0.003	1.48
SCA-41	93.215	1.88	15.51	2449.	71.	81.2	0.003	1.29

Table V-7 (continued). MERCURY INLET DATA SUMMARY (ENGLISH)

CODE	DRY GAS VOLUME SCF	MOISTURE %	TOTAL CATCH MG	FLOW RATE SCFM	STACK TEMP F	ISO-KINETIC %	CONC GR/SCF	EMISSION LB/DAY
SCA-43	91.100	1.71	17.27	2401.	71.	81.0	0.003	1.44
SCA-45	87.429	1.94	15.65	2368.	70.	78.8	0.003	1.34
SCA-47	87.630	1.88	18.11	2370.	70.	78.9	0.003	1.55
SCA-49	88.774	1.72	19.83	2416.	70.	78.4	0.003	1.71
SCA-51	89.452	1.59	19.88	2424.	71.	78.7	0.003	1.71
SCA-53	89.255	1.70	15.28	2428.	71.	78.5	0.003	1.32
SCA-55	91.154	1.20	18.73	2531.	70.	76.8	0.003	1.65
SCA-57	93.929	1.02	20.40	2615.	70.	76.6	0.004	1.80
SCA-59	93.310	1.51	17.27	2563.	70.	77.7	0.003	1.50
SCA-61	92.816	1.89	18.11	2509.	70.	78.9	0.003	1.55
SCA-63	92.411	1.74	20.37	2531.	71.	77.9	0.003	1.77
SCA-65	90.909	1.59	22.85	2493.	71.	77.8	0.004	1.98
SCA-67	91.113	1.67	26.71	2454.	71.	79.2	0.005	2.28
SCA-69	90.198	1.66	22.36	2452.	71.	78.5	0.004	1.93
SCA-71	90.299	1.77	26.90	2443.	71.	78.9	0.005	2.31
SCA-73	91.370	2.01	25.28	2414.	71.	80.8	0.004	2.12
SCA-75	88.090	1.64	23.93	2419.	71.	77.7	0.004	2.08
SCA-77	88.636	2.00	25.65	2365.	71.	79.9	0.004	2.17
SCA-79	86.369	1.64	21.50	2376.	71.	77.6	0.004	1.87
SCA-81	85.447	1.89	23.01	2340.	71.	77.9	0.004	2.00

The low molecular weight of hydrogen may result in the orifice meter being operated in a nonlinear region. To determine the effect this may have had on the isokinetics, a check of the orifice meter calibration was made using the field sampling data. At the orifice meter pressure differentials encountered during field testing, the actual sampling rates as measured by the dry gas meter ranged from 1% to 3% lower than predicted from pretest calibration.

The combined effect of the inaccurate moisture estimate and the shift in the orifice meter curve account for approximately one-third of the total isokinetic error. Discussions with EPA personnel provided the answer to the balance of the error. The "C" factor equation and the modified procedure for using the operating nomograph specified by Method 102 are not exact, but are approximations. Under the particular conditions of these tests, a sampling rate error ranging from 15% to 18% was introduced by using these procedures. It is understood that the present procedure is under study and a revision will be forthcoming.

The total system operated with very few fluctuations because the PuraSiv Hg operating parameters were set by the plant and automatically controlled throughout the test period. In view of these facts, in addition to the highly turbulent flow at the inlet sampling location, the existence of equilibrium conditions at that point of the process would appear probable. It has previously been shown that all inlet mercury concentrations measured were below the equilibrium saturation concentration of mercury for the test conditions. Hence, it is doubtful that any particulate mercury did indeed exist in the inlet gas stream. This being the case, the use of isokinetic sampling is not a necessary test requirement. Proportional sampling is acceptable for such conditions.

However, while the existence of particulate mercury in the inlet gas stream was unlikely, the case was re-examined based on the

FIGURE V-3. ERRORS DUE TO ANISOKINETIC CONDITIONS (SMALL PARTICLES)

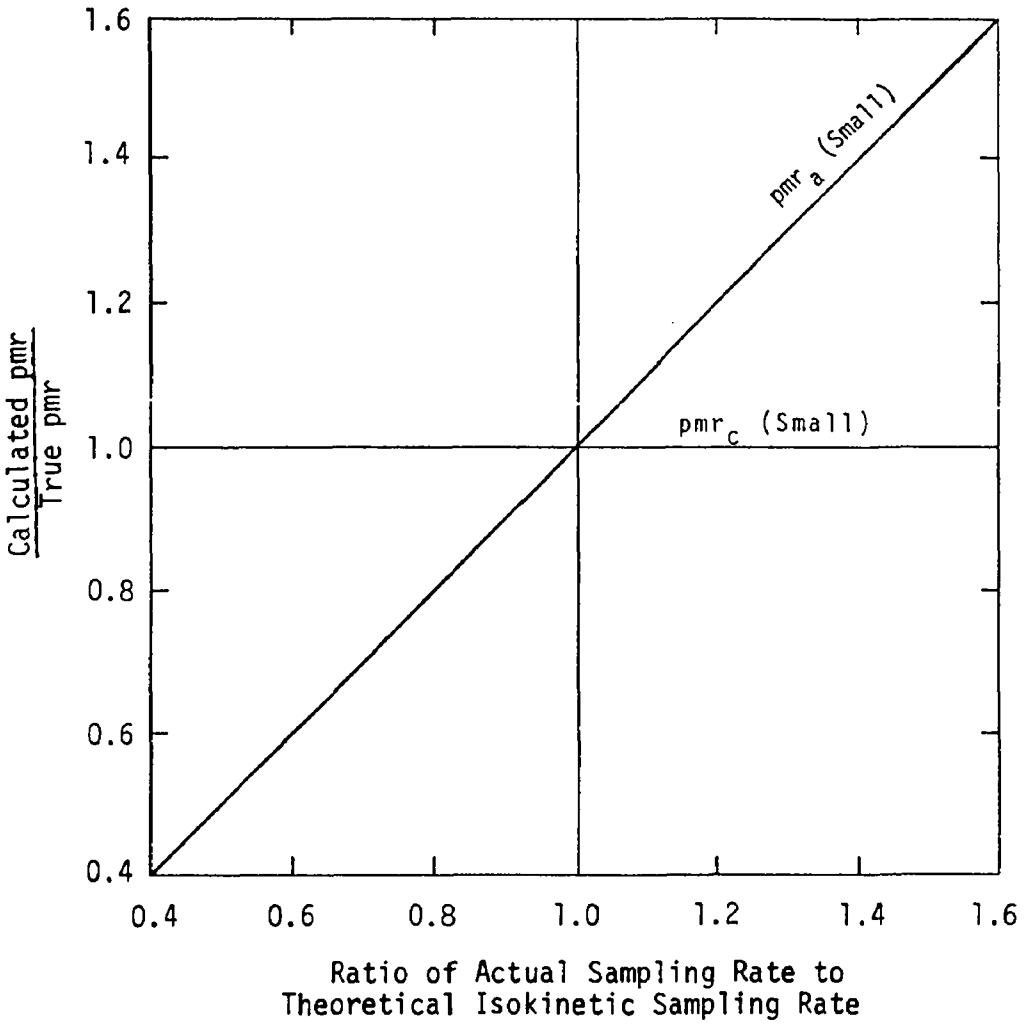

assumption that particulate mercury did exist at the inlet sampling location. This occurrence would be expected to be in the form of a fine liquid mist, i.e., very small particles (<10 microns). Brink mist eliminators provide essentially 100% collection efficiency on all particles larger than 3 microns in diameter. In addition, most Brink demisters are designed to remove 94% to 99.7% of all particles smaller than 3 microns in diameter. For this reason, it can be assumed that any mercury particles present would have to be smaller than 3 microns. Figure V-3 graphically illustrates the effect of anisokinetic sampling of streams containing only small particles.* Regardless of the isokinetic sampling ratio, when the pollutant mass rate is determined by the sample concentration method (pmr_c), the calculated mass rate and true mass rate will be identical. On the other hand, when determining the pollutant mass rate by the ratio-of-area method of calculation (pmr_a), the calculated values under the anisokinetic conditions experienced in this test program would be approximately 20% less than the actual concentrations. Therefore, since the sample concentration method of calculation was used exclusively in this test project, even if mercury mist did exist in the inlet stream, the underisokinetic sampling rates would not influence the final measured mercury content. For additional explanation of the two methods of calculation, see Appendix A.

Examination of Tables V-1 through V-5 shows that the reported inlet mercury concentrations (6 to 10 mg/Nm^3) were consistently below the estimated inlet equilibrium mercury saturation concentration corrected to standard conditions (10.9 mg/Nm^3). Although the presence of liquid mercury particles at the inlet sampling

---

*"Method of Interpreting Stack Sampling Data," Smith, W.S., et al, National Air Pollution Control Association, Public Health Service, U.S. Department of Health, Education and Welfare.

site was not expected, similarly, a condition of under-saturation of mercury vapor at that point was also unexpected and is questionable. There is no apparent reason to believe that the estimated accuracies of the sampling train and of the analytical procedure are unrealistic. However, there does exist the definite possibility that the temperature and/or pressure recorded for the inlet sampling site were inaccurate and, thereby, caused a bias in the estimated inlet mercury saturation concentration.

The most likely explanation for this apparent discrepancy is that the temperature at the inlet sampling site was probably not the temperature as recorded from the existing thermometer which was installed near the outlet of the secondary cooler. Should the temperature at the inlet sampling site have been 18°C instead of 21°C, as read from that thermometer, measured mercury concentrations would coincide with an inlet stream saturated with mercury vapor. A change of $3^{o}C$ in the inlet temperature would not alter the test results for mercury concentrations as reported at dry standard conditions. On the other hand, this same temperature change reduces the calculated equilibrium mercury concentration by 20%. Averaging the inlet mercury concentrations of Cycle Nos. 1, 2, 4, and 5 (Cycle No. 3 excluded because of the plant shutdown) yields an average measured concentration of 8.4 mg/Nm^3. The inlet equilibrium saturation concentration, corrected to dry standard conditions, corresponding to stack conditions of $18^{o}C$ and 5 psig, is 8.4 mg/Nm^3. Therefore, it is suggested that the reported estimated inlet equilibrium concentration may have been biased by a process instrument whose accuracy and calibration are unknown.

TECHNICAL REPORT DATA
(Please read Instructions on the reverse before completing)

1. REPORT NO. EPA-650/2-75-026-a, -b	2.	3. RECIPIENT'S ACCESSION NO.
4. TITLE AND SUBTITLE Testing of a Molecular Sieve Used To Control Mercury Emission from a Chlor-Alkali Plant, Volume I and Volume II (Appendices)		5. REPORT DATE March 1975
		6. PERFORMING ORGANIZATION CODE
7. AUTHOR(S) John T. Chehaske and John R. Cline		8. PERFORMING ORGANIZATION REPORT NO.
9. PERFORMING ORGANIZATION NAME AND ADDRESS Air Pollution Control Department Engineering-Science, Inc. 7903 Westpark Drive, McLean, VA 22101		10. PROGRAM ELEMENT NO. 1AB015; ROAP 21AFA-106
		11. CONTRACT/GRANT NO. 68-02-1406, Task 3
12. SPONSORING AGENCY NAME AND ADDRESS EPA, Office of Research and Development NERC-RTP, Control Systems Laboratory Research Triangle Park, NC 27711		13. TYPE OF REPORT AND PERIOD COVERED Final Task: 9/74-1/75
		14. SPONSORING AGENCY CODE
15. SUPPLEMENTARY NOTES		

16. ABSTRACT

The report gives results of performance testing for mercury emission control of a Union Carbide PuraSiv Hg adsorbent unit currently used to control mercury emissions from the by-product hydrogen stream of the mercury-cell chlor-alkali production facility of Sobin Chlor-Alkali in Orrington, Maine. Adsorber inlet and outlet streams were sampled simultaneously during five consecutive 24-hour adsorption cycles, eight sampling runs per cycle, in accordance with a modified version of the EPA Reference Method 102. Inlet mercury concentrations were stable at 6 to 10 mg/normal cu m. Outlet mercury concentrations of 0.5 and 3.5 mg/normal cu m were approached at the beginning and end of each adsorption cycle, respectively. This occurrence was due to the PuraSiv unit's operation at nearly 150% of design capacity of 49.6 normal cu m/min. If operated at design capacity, the estimated outlet mercury concentrations from the PuraSiv Hg unit would average 2.0 micrograms/normal cu m throughout each adsorption cycle, representing a 99.9% collection efficiency.

17. KEY WORDS AND DOCUMENT ANALYSIS

a. DESCRIPTORS	b. IDENTIFIERS/OPEN ENDED TERMS	c. COSATI Field/Group
Air Pollution	Air Pollution Control	13B
Absorbers (Materials)	Stationary Sources	11G
Mercury (Metal)	Molecular Sieves	07B
Performance Tests	Chlor-Alkali Plants	14B
	PuraSiv Hg Unit	

18. DISTRIBUTION STATEMENT Unlimited	19. SECURITY CLASS (This Report) Unclassified	21. NO. OF PAGES Volume I - 62 Volume II - 229
	20. SECURITY CLASS (This page) Unclassified	22. PRICE

EPA Form 2220-1 (9-73)

ENVIRONMENTAL PROTECTION AGENCY
Technical Publications Branch
Office of Administration
Research Triangle Park, N.C. 27711

OFFICIAL BUSINESS

AN EQUAL OPPORTUNITY EMPLOYER

POSTAGE AND FEES PAID
ENVIRONMENTAL PROTECTION AGENCY
EPA - 335

U.S. MAIL

Return this sheet if you do NOT wish to receive this material ☐, or if change of address is needed ☐. (Indicate change, including ZIP code.)

PUBLICATION EPA-650/2-75-026-a