PB-207 198

The Impact of Costs Associated With New Environmental Standards Upon the Petroleum Refining Industry

Part II
structure of the industry

Stephen Sobtoka and Company

November 1971

Distributed By:

NTIS

National Technical Information Service
U. S. DEPARTMENT OF COMMERCE
5285 Port Royal Road, Springfield Va. 22151

THE IMPACT OF COSTS ASSOCIATED WITH NEW ENVIRONMENTAL STANDARDS UPON THE PETROLEUM REFINING INDUSTRY

PART TWO

STRUCTURE OF THE INDUSTRY

Prepared for the
Council on Environmental Quality

New York, N. Y.
November 23, 1971

Stephen Sobotka & Company

TABLE OF CONTENTS

INTRODUCTION AND SUMMARY

SECTION I. DEMAND

A. The Products 6
B. Market and Distribution 7
C. Government Influence on Market 9

SECTION II. SUPPLY

A. Industry Operations 12
1. The production process 12
2. Type and location of raw materials 15
3. Number and location of firms and of plants 16
4. Types of firms 16
5. Types of plants 16
6. Employees 19

B. Financial Structure and Trends 21
1. Costs - fixed and variable 21
2. Profits 22
3. Cash flows 22

C. Refinery Technology and Technological Trends 23

D. Industry Utilization Rates 24

E. Competition 25

APPENDIX The Viability of Small Refineries 27

TABLE OF CONTENTS
(Cont.)

EXHIBITS

1. Petroleum Administration for Defense (PAD) Districts
2. Domestic Consumption of Petroleum Products
   a) U.S. Sales of Distillate Fuel Oil by Uses
   b) U.S. Sales of Residual Fuel Oil by Uses
3. Refinery and Terminal Prices
4. Functional Characterization of Petroleum Refining Processes
5. Schematic Flow Diagram of Petroleum Refining -
   A. Petroleum Product Manufacturing
6. Refinery Environmental Control Processes
7. Schematic Flow Diagram of Petroleum Refining -
   B. Pollutant Collection and Treatment
8. Number and Capacity of Refineries by States
9. Refineries - Distribution by Size - 1971
10. Refineries - Distribution by Size - 1966
11. Number of Refineries by Size Classes
12. Refinery Capacity by Size Classes
13. Employment, Earnings and Payrolls
14. Average Operating Costs of U. S. Refineries
15. Rate of Return on Net Worth
   a) Estimated Investment in Fixed Assets
   b) Estimated Financial Data
16. Estimated Petroleum Refinery Capital Requirements 1972-1981

INTRODUCTION AND SUMMARY

This is Part Two of a three-part report. In this Part we present data and background information relevant to a consideration of the economic impact of pollution abatement costs on the petroleum refining industry.

In our analysis we have throughout assumed a normal functioning of market forces. We assume that price controls, if existent, will not affect the flow of investment funds to the oil industry and will operate so as to allow price fluctuations which reflect cost changes.

Our choice of data and our description of the refining industry are influenced by two considerations. First, to present information valuable to persons who guide the making of public policy for this industry. Secondly, to discuss those aspects of the industry's relations with other industries which would be useful in assessing the impact of pollution abatement costs in the economy generally.

The petroleum refining industry in the United States consists of some 250 plants owned by about 130 firms and located in 39 of the 50 states. The refineries have a replacement value at current prices in excess of $15 billion. The refining industry employs about 150,000 persons.

The bulk of refining is done by firms which also market refined products or produce crude oil, or do both. In most firms the refining portion of the business is not its major activity. Refinery investment is less than 25 percent of total investment in the domestic oil industry, and refinery employment is a similar fraction of total employment.

With the exception of residual oil there is little foreign competition. There also is only limited competition from products of other industries.

The industry has experienced a fairly steady growth rate which approximates the growth in real GNP. This is expected to continue.

SECTION I

DEMAND

A. The Products

The industry manufactures hundreds of distinguishably different products. From the viewpoint of environmental control costs these may be grouped into four broad product classes: gasoline, intermediates, residual, and other.

Gasoline accounts for about 45 percent of industry output. It is typically priced at about 12 cents per gallon[1)] in cargo lots on the Gulf Coast. Although other materials can be used as gasoline substitutes (propane, methyl and ethyl alcohol, electric batteries) their use is negligible for cost reasons.

Intermediates include military and commercial jet fuel, kerosene, space heating oil, also called No. 2 fuel or furnace oil, and diesel fuel. These products are typically priced at about 10 cents per gallon and make up about 33 percent of industry output. No substitutes exist for the transportation fuel portion of the intermediates market. Natural gas is used extensively in the space heating market and may be more or less expensive than oil, depending on user location. Some heating oil is imported, using a "quota" system, into the Northeast and reduces the demand for domestic product.

Residual is currently priced at from about 6 cents to about 12 cents per gallon or even more, depending on sulfur content and location. Residual amounts to about 6 percent of domestic petroleum production and 17 percent of domestic demand for oils. The difference is accounted for by imports. Because there are no limits on residual imports into the Easter states, the price of residual in the U.S. is based on the international market. Through most of

1) Average of 100 octane "premium" at 13 cents per gallon and 94 octane "regular" at 11 cents per gallon. Platt's Oil Price handbook.

the 1960's residual was priced sufficiently below crude oil to prompt increased investment in refineries in order to reduce residual yields. In large volume installations natural gas and coal compete directly with residual oil.

Other products include asphalt, lubricants, liquefied petroleum gas (mostly propane), naphthas and solvents, coke, petrochemicals and petrochemical feedstocks. (Asphalt and lubricating oils are important products for many small refineries.) These products account for about 16 percent of the domestic industry's output. They are priced from 4 cents to $1.00 per gallon. Most lubricants and liquefied petroleum gas (LPG) have no significant economical substitutes from outside the industry. On the other hand, petroleum solvents face direct competition from the chemical industry. Some of the "other" products, like asphalt on the East Coast and petrochemical feedstocks generally, are subject to international competition. Non-metallurgical petroleum coke is exported in significant amounts. The market for this product depends in part on emission rules in customer countries.

B. Market and Distribution

The U.S. petroleum market has traditionally been divided into five geographic regions called "PAD Districts." (See Exhibit . Within each district product consumption is classified by individual commercial (including government), industrial and export use. Market data for 1966 through 1970 by product and district are shown in Exhibits 2, 2a, and 2b.

Oil products are distributed from refineries primarily by pipeline and tankers or barges to terminals. From there local

deliveries are made by truck. Some rail distribution is utilized. The impact of new environmental standards on the distribution and marketing of oil products does not fall within the scope of this study. But the costs of meeting new standards in moving the product from the refinery to the final consumer and in the associated storage facilities may be important.

From the viewpoint of dollar volume gasoline accounts for 50 percent of the refining industry's value of output. Intermediates account for 31 percent and residual for only 4 percent.[1] Well over one-half of total refinery output sold is through distribution and marketing facilities which refining companies own or in which they have a financial interest. In general, sales of higher-unit-value products (lubricants, gasoline, jet fuel) are more highly integrated than those of low-unit-value products. Most large companies operate their refining, distribution and marketing functions in an integrated manner. Assigning product prices at various points within the operation is an internal matter to most companies. Nevertheless, considerable product is sold by refiners directly to customers at published prices. Thus, conclusions adequate for this study can be drawn about the costs associated with new environmental standards.

Over the past five years the volume of gasoline produced has increased at an average annual rate of 4.7 percent. Intermediates consumption has grown at 5.2 percent per year. Residual production in domestic refineries has been stable but consumption has increased at about 6.5 percent per year.

Oil product prices have increased at a slower rate than either consumer or wholesale price indices, largely because the

1) Because of residual imports the relative contribution of the various products to domestic refiners' gross dollar revenue is different than the relative contribution at the consumer level.

industry has been able to utilize improved technology to offset cost increases. In the short term however important price changes do occur, mostly associated with changes in refinery utilization and with seasonal factors. Also, as crude oil accounts for over two-thirds of the cost of oil products at the refinery gate, product prices change with the price of crude. Since 1966 there have been several increases in the price of crude oil. In Exhibit 3 representative major product prices for a five-year period are tabulated.

C. Government Influence on Market

Federal, state and local governments all influence the oil product market. The Federal Government's main influence is through its indirect support of the price of domestic crude oil. This control is exercised by limiting, in the interest of national security, the amount of lower-priced foreign oil that can be imported into the U.S.[1)]

All levels of government purchase large quantities and a wide range of oil products. One of these purchases, military grade jet fuel (JP-4), is important to some small refiners. A gasoline-like material, JP-4 requires little processing beyond separation from crude. In contrast, automotive gasoline is produced in a complex processing scheme.

Government also influences the market for petroleum products through imposition of environmental standards. This

1) Because importation of crude oil is limited by a quota system and foreign crude prices have typically been lower than domestic, import rights normally have considerable value. These rights are allocated among refining firms according to their size. Although large firms have bigger quotas than small ones the latter are given more "tickets" per unit of throughput.

can take the form of direct specification of product characteristics, e.g., sulfur content in residual oil. Or it may take the form of imposing environmental standards on petroleum users which in turn affect the nature of the product, e.g., control of auto emissions . In either case, the potential costs of changes in product characteristics far exceed the cost of bringing refinery operations up to environmental standards.

Government policy in pricing and regulation of natural gas, an important refinery fuel, also affects refining costs. This will be further discussed below.

SECTION II

SUPPLY

A. Industry Operations

1. The production process.

Although a typical oil refinery is technically complex, the manufacturing process is conceptually simple.

Crude oil is the primary raw material used in refining. Crude oils are liquid mixtures of many carbon-containing chemical compounds. Crudes differ from one another in the relative concentration of the various compounds. In refining, crude oil is first separated into several groups of varying molecular size known as cuts. The chemical composition of some of these cuts is then altered by changing the average molecular size. Some cuts are further processed to alter the shape or structure of the molecules. Most of the original and the altered cuts are "treated" to make innocuous or to remove impurities, notably sulfur. Treated cuts are then blended to produce finished products. To these may be added various substances, known as additives, to impart certain desirable properties. Exhibit 4 classifies various refinery processes according to their principal function in the refining of petroleum: separation, alteration of molecules by size or shape, or treating. A schematic flow diagram of a refinery is shown in Exhibit 5.

In refinery operation certain polluting materials may be released into the environment. The pollutants are by-products of the various refinery processes. (See Exhibit 7 of Part Two) The principal ones arise in operations as follows:

a) Hydrogen sulfide (H_2S), the gaseous precursor of sulfur oxides, is formed in hydroprocessing (catalytic reforming, hydrotreating and hydrocracking) and cracking (catalytic and thermal, including coking). Only trivial amounts, which can be ignored, are formed in other processes (distillation, asphalt manufacture, lubricating oil manufacture, alkylation, etc.).

Sulfur oxides are also formed in the combustion of sulfur-containing liquids. (Also, when liquid fuels containing nitrogen compounds are burned, the resultant nitrogen oxides may cause an opaque stack "plume.")

b) Hydrocarbon vapors can escape from tanks containing gasoline or crude oil.

c) Carbon monoxide (CO) is a by-product of catalytic cracking. Also some catalyst dust occurs.

d) Substances which create a biological oxygen demand (BOD) in waste water are formed in catalytic and thermal cracking, and in sulfuric acid treatment of petroleum products (notably naphthenic and Pennsylvania lubricating oils). Also most of the solvents (phenol, furfural, etc.) used in manufacturing solvent-refined lubricating oils create BOD.

e) Waste water from every refinery may contain oil or the water may not have a neutral pH.

Processes used to control the emission of these pollutants are shown in Exhibit 6. The schematic flow diagram in Exhibit 7 shows the collection and treatment of pollutants produced in each process.

EPA has assumed certain technological devices to be necessary and sufficient to meet proposed new environmental standards. They are:

(1) Hydrogen sulfide removal from refinery fuel gas and conversion to elemental sulfur in plants equipped with tail-gas scrubbing. The entire sulfur control system is to be paralleled with a redundant facility.

(2) Floating roofs on gasoline and volatile crude oil storage tanks with more than 40,000 gallon capacity.

(3) Catalyst removal from catalytic cracker regenerator flue gas by electrical precipitation and incineration of the flue gas in carbon monoxide boilers. An important EPA assumption was that both particulate and carbon monoxide emissions from catalytic crackers with fresh feed capacity below 10,000 barrels per stream day were so low that no equipment would be needed in these units.[1)]

(4) BOD removal in an effluent treatment plant including equipment for water flow equalization, oil separation, neutralization, flotation, sedimentation, coagulation and biological treatment.

(5) Oil and suspended solids removal and neutralization in a water effluent treating plant simpler than that needed for BOD removal.

The foregoing classification can be summarized as follows:

Refining Processes Installed				Effluent Control Required		
				Air		Water
Large Cat. Cracker	Thermal or Small Cat. Cracker	Hydro Processes	Lube Mfg.	H_2S	CO & Cat.	BOD
x				x	x	x
	x			x		x
		x		x		
			x			x

In addition, all refineries will have to have floating roofs on specified tanks and a water effluent treating facility for removing oil and suspended solids and for neutralizing.

1) The assumption that small catalytic crackers will not need control equipment is an important one. There are 27 catalytic crackers in 25 refineries (10% of the industry) with catalytic crackers of less than 10,000 barrels per stream day capacity (Oil and Gas Journal, March 22, 1971, pp 98-120). A 7500 barrels per day catalytic cracker emits perhaps three tons of sulfur oxides and 70 tons of carbon monoxide per day.

The imposition of environmental controls on the quality of refinery products will add additional processing complexity to refineries. For example much more catalytic reforming, as well as some other processes, will be introduced to make lead-free gasoline. Intermediates will require hydro-desulfurization. The manufacture of low-sulfur residual will require installation of considerable equipment. At the moment, the low-sulfur residual picture is complicated by wide variations in crude oil composition and varying sulfur content restrictions. Residual desulfurization is expected to be expensive. These matters, though of compelling economic importance to many refiners, lie outside the scope of our study.

2. Type and location of raw materials

Crude oil is the most important raw material used by the refining industry. Natural gasoline, a liquid product of the natural gas industry, furnishes about 7 percent of refinery intakes. There are no other significant raw materials. About 89 percent of industry raw material is of domestic origin, 11 percent is imported[1] from Canada, Mexico, South America (largely Venezuela), Africa, Indonesia and the Middle East. It appears likely that the U.S. will in years to come import an increasing fraction of its crude oil requirements.

The major crude-producing states are Texas, Louisiana, California, Oklahoma, Wyoming and New Mexico, although 30 of the 50 states have some production. Texas and Louisiana together

1) U.S. Bureau of Mines, Mineral Industries Surveys - Petroleum Jan. 1971 - Table 23.

account for about 48 percent of the domestic industry's crude oil production. Large Alaskan deposits will be exploited when a transportation system for them is built.

3. Number and location of firms and of plants

There are about 130 firms in the oil refining industry. They own some 250 refineries. Refinery locations are concentrated along the Mississippi-Louisiana-Texas Gulf Coast, near Los Angeles and San Francisco, in the Pacific Northwest, near Chicago, near Philadelphia and in New Jersey, in Ohio, and in Oklahoma. Exhibit 8 shows the number of refineries and refinery capacity by state.

4. Types of firms

Firms in the oil refining industry can be classified according to size, extent of integration, and the number and size of refineries owned. All refineries are necessarily multi-product and all perform the entire process of converting crude oil into salable products. All large and medium size firms, and some small ones, have diversified into chemical manufacturing. A very few have further diversified into other industries but the fraction of total capital employed in non-oil or chemical activities generally is small.

5. Types of plants

Oil refineries are categorized by size and by the range of their products. There is also considerable variation in age of refineries. But classification by age is not useful because additions to and modifications of plants are the industry's principal form of expansion.

Exhibit 9 shows the distribution of refineries by size. Refineries of over 100,000 barrels per day capacity account for 55 percent of U.S. refinery capacity (a barrel is 42 U.S. gallons). They number 36 out of a total of about 250 plants. Very few new refineries have been built in the last five years and few have been abandoned. Of a total population of about 260 five years ago, 25 plants appear to have been shut down and 15 new ones built [1] Exhibit 10 shows the distribution of refineries by size in 1966. Those newly built plants which appear to be fairly complete refineries vary in size from 10,000 to about 150,000 barrels per day of throughput. It appears that size is not a characteristic which in itself accounts for turnover. Exhibits 11 and 12 depict the distribution of industry capacity by numbers of plants and by plant size in 1966 and 1971.

Multiple plant operations are commonplace in the industry. The 16 largest firms, each of which has over 200,000 barrels per day of total capacity, operate 105 refineries. These 105 plants account for 80 percent of the industry's capacity. A few of these refineries have capacities of less than 25,000 barrels per day. Half of all industry refineries (125 plants) are smaller than 25,000 barrels per day. They account for only 8 percent of industry capacity.

Technological progress in the past 20 years has induced construction of larger, lower-unit-cost process units. Consequently there has been a trend toward larger plants. Although no new plants of over 200,000 barrels per day have been built, the industry's net growth in capacity has been the result of smaller plants' expansion to this very large size class.

---

1) In the Appendix we discuss the characteristics of the shut-down plants.

The trends in the industry most significant to this study are that the number of refineries has decreased slightly and their average size has increased.

In general, very small refineries with intakes below about 10,000 barrels per day have few units and manufacture only a narrow range of products. Some small refineries in Pennsylvania, southern Arkansas, Oklahoma, and South Texas take advantage of local crude quality to manufacture lubricants. Asphalt is also an important product for many small refineries. Over a third of plants with capacities below 10,000 barrels per day produce asphalt as a principal product. Asphalt is costly to transport, especially overland. Therefore a relatively large fraction of the industry's asphalt output is produced in small refineries.

As regards refinery differentiation by product slate, a small refinery may be designed to process low-sulfur crude oil into the naturally occurring volumes of gasoline, intermediates and residual, or asphalt which is essentially a special grade of residual. Such a refinery requires only a crude oil distillation unit, a catalytic reformer with feed pretreater, two or three additional distillation columns and treating units. Some small refiners in Southern California due to the characteristics of local crude oil manufacture military jet fuel and residual with only a crude oil unit. On the other hand a large refinery manufacturing a full range of fuel products plus lubricants, industrial solvents, liquefied petroleum gas and a few common chemicals will have a score or more of process units.

A common technology is used throughout the industry. The differences that do exist are small and probably not significant in terms of a plant's ability to meet environmental standards economically. There are important differences in the extent to

which environmental control equipment has been installed to date.

6. Employees

Data on employment and earnings are presented in Exhibit 13. About 60 percent of petroleum refining employees are production workers[1]. Their hourly and weekly earnings are considerably above the average for all manufacturing. Hourly earnings in 1971 in petroleum refining are estimated at $4.82 versus $3.58 for all manufacturing, weekly earnings $205.00 versus $142.00[2].

Refinery employment as a whole has been fairly stable. In 1964 there were 150,000 employees and in 1968, 151,000. By 1970 employment had risen to 153,000[3]. In the same period the industry's capacity rose about 17% mostly as a result of capacity increases in existing refineries. A great many refineries, about 2/3 of the total, have been expanded in the last 5 years. It is likely that the bulk of the net employment increases have taken place in very large refineries, those over 100 or even 200 thousand barrels per day of throughput which also account for almost the entire net growth in output.

Perhaps one-third of refining industry employees have skills which are not readily transferable to other industries. While it was clearly beyond the scope of this study to make an analysis of the transferability of the skills required by the industry, an examination of the occupational titles indicates that two-thirds of the employees have skills which are not special to the industry, or they are unskilled.

---

1) Source: Chemical & Engineering News, Sept. 6, 1971, p. 33A

2) ibid.

3) Statistical Abstract of the U.S. Bureau of the Census, Dept. of Commerce, p. 221. (Some refineries are operated in conjunction with transportation and/or terminalling facilities. It is not clear whether their employees are included in the refinery worker count.)

Detailed occupational data for the petroleum refining industry are available for the year 1965. In that year 148,000 people were employed in the petroleum refining industry, 89,000 of whom were production workers.[1] These figures include employment in central offices, research laboratories, etc. of refining firms as well as in refineries. Refinery employment was about 106,000 including about 77,000 production workers. A Bureau of Labor Statistics study[2] of a representative sample of 46,000 of the 77,000 showed that almost 1/3 of refinery production workers were maintenance workers and 85% of these were skilled craftsmen, such as welders, mechanics, machinists, electricians, etc. One half of production workers were skilled refinery operators such as stillmen, treaters, compounders, testers, etc. These men's skills are probably transferable only to other similar industries, such as chemical manufacturing or food processing. The balance of the production workers are either unskilled, or are helpers, or have general skillls such as stock clerks or truck drivers.

Thus it appears that about one-third of the people in the industry (probably a smaller fraction in small plants) are skilled workers whose job opportunities at a comparable skill level are dependent on re-employment in the "process" industries. The other two-thirds are employable in other industries at their present skill levels if job opportunities exist for them.

---

1) Statistical Abstract of the U.S., 1971 Bureau of the Census, Dept. of Commerce, p. 221

2) Industry Wage Survey, Petroleum Refining, Dec. 1965, Bulletin #1526, U.S. Dept. of Labor. Bureau of Labor Statistics, p. 12.

B. Financial Structure and Trends

It is impossible to analyze the financial structure of the petroleum refining industry using published data. Too few firms and none that are typical of the industry are exclusively or even primarily in the refining business. To discuss the financial characteristics of the industry we shall use price data which reasonably reflect the values of products made by typical refiners, and we shall assume cost data we consider appropriate for crude oil.

Sales volume in the oil industry has risen almost without interruption and at a fairly steady rate for many years. The history of bulk prices of major products is shown in Exhibit 3.[1)]

1. Costs - fixed and variable.

No data are published which break down refinery costs in a manner useable for this study. We have therefore made such an estimate for a plant manufacturing fuel products (no lubricants). We caution the reader that no actual refinery will exactly match these figures.[2)] Refining costs are characterized by a very high ratio of raw material costs to total cost. Fixed costs make up most of the balance. Our illustrative estimate of costs follows. (See next page)

1) There is considerable variation in prices due to transport costs.

2) Our estimate closely approximates that of W. L. Nelson. See Exhibit 14.

Costs - Fixed and Variable

Item	Cost/barrel of refinery intake	Percent of total costs Fixed	Variable
Raw materials	$ 3.50		73%
Fuel and utilities	.30	1%	6%
Labor	.25	5%	
Chemicals, catalysts, additives & materials	.20		4%
Insurance and taxes	.05	1%	
Capital charges[1)]	.50	10%	
Total	$ 4.80	17%	83%

1) Basis 8% per year cost of capital.

2. Profits

No data on refinery profitability are available. But we can assume that refining operations are, on the margin, neither more nor less profitable than the rest of a typical oil company's business. Exhibit 15 gives some relevant financial data for the oil industry. While profitability of the business as a whole has been subject to some variability, industry earnings have been adequate to attract capital to finance growth and replacement.

3. Cash flows

Exhibit 16 shows our derivation of an estimate of the refining industry's capital needs in the 10 years beginning with 1972. This estimate indicates that roughly $15 billion dollars will be used for expansion and normal replacement in the

decade. Substantial amounts of additional capital will be required for equipment to manufacture environmentally "clean" products. Capital requirements for this purpose are expected to be about $5 billion (EPA estimate). Finally, $1 billion will be needed to conform refinery operations to environmental standards. We shall discuss this further in Part Three.

It is useful to put our estimates of capital requirements for refineries in perspective with oil company capital expenditures for all purposes. Data on a group of 28 large oil companies show that roughly 22 percent (about $1.5 billion of $6.6 billion) of domestic capital expenditures by this group represents investment in refineries and chemical plants in 1970.[1] Total domestic investment in that year for the same group of companies is about 58 percent of worldwide investment.[2]

C. Refinery Technology and Technological Trends

Petroleum refining has been a high-technology industry since World War I. The technology of the industry has steadily improved. A few major breakthroughs, notably thermal and catalytic cracking, catalytic reforming, and solvent extraction of lubricating oils have had profound effects. But of almost equal importance in the long run has been the improvement in existing processes. Technological improvements are utilized industry-wide because industry members traditionally license the use of significant new technology to competitors. There are no important trade secrets in the refining industry.

---

1) Financial Analysis of a Group of Petroleum Companies 1970, Chase Manhattan Bank, p. 19.

2) ibid. p. 18

A combination of product quality competition and economies of building and operating larger plants has served to push oil refining firms toward bigger and more complex refineries. Product quality competition has been achieved by the use of additives and of quality-improving processes like catalytic reforming to increase gasoline octane number, and by catalytic hydrogen treatment to reduce sulfur content of intermediates. This has led to an increase in the amount and value of processing equipment per unit of output. Relatively low residual prices which have encouraged investment to reduce residual yields also raise the value of equipment per unit of output.

Thus, larger refineries and larger units within existing refineries mark the industry's development. Once the capability exists to build and operate larger plants there is a strong economic incentive to do so. Large plants cost less to build per unit of intake than smaller ones. Typically it only costs 60 percent more to build a plant with 100 percent more capacity (the "two-thirds power rule").

This does not mean that an existing small plant is necessarily unviable. Existing small plants are effective competitors. But new small plants are not being built, except for an occasional asphalt plant.

D. Industry Utilization Rates

U. S. refineries are currently processing crude oil at an average annual rate of about 88 percent of reported capacity. This is a fairly typical long-run figure for the industry. But it is important to differentiate between a refinery's capacity

to process crude oil and its capacity to manufacture a particular product.

Almost all refineries have the flexibility to alter their product mix. They can to some extent increase the output of gasoline at the expense of intermediates or they can produce more intermediates at the expense of gasoline. Nearly all refineries could increase residual manufacture above the design level but this is uneconomic while the price of residual is below the cost of crude oil. Published data on capacity utilization cannot reflect the industry's ability to alter yields. Hence they are not useful in estimating the industry's ability to increase output of specific products. We believe that at present there is excess capacity to produce gasoline at current octane numbers and lead content.[1] By 1973 or 1974, however, more capacity will be needed than is now available.

Requirement to manufacture products with specific properties further influences capacity. A refinery that can manufacture 100 volumes of 94 octane leaded gasoline might be able to make only 70 volumes of lead-free 94 octane.

Producing low-sulfur residual also presents special problems. Residual is essentially a by-product of the refining process. Its sulfur content is predominantly dependent on the sulfur content of the crude the refinery uses. It follows that most refineries have no "capacity" to produce low-sulfur residual from their normal crude stream.

Availability of fuel of acceptable quality for internal refinery use also affects refinery capacity. Refiners normally burn in their internal operations the lowest valued material

1) No data are available to prove this assertion but prices on the "cargo" and "bid" markets indicate that this must be the case. These prices are too low to provide an incentive to increase capacity. This is discussed elsewhere in the report.

available. They first use the gases produced as a by-product of refining operations because these gases generally have no market. The next choice is purchased natural gas, if available, because it is priced below residual (per BTU) in most parts of the U.S. and the facilities needed to burn gas are cheaper than those needed to burn liquids. The remaining requirement, about 120,000 barrels a day[1] currently, is met largely with residual fuel. A small amount of coal is also used. Residual and coal normally contain considerable sulfur. Thus, if low sulfur rules are imposed some refinery capacity will depend on availability of low-sulfur residual.

Similarly, the availability of gas in some instances affects capacity. Refineries with no facilities for burning liquid or solid fuels would have to install new equipment if gas were not available in sufficient quantity. This would be expensive as well as time consuming.

E. Competition

The market for wholesale oil products is competitive in the economist's meaning of the term. That is, the price elasticity of demand facing individual firms is high. Despite a strong and continuing industry effort to establish brand differentiation for retail consumers, the wholesale market operates on a commodity basis. Perhaps one-third of gasoline[2], about 50 percent of intermediates and almost all residual are sold as commodities. With such large volumes sold by many refiners an active brokerage business exists. Non-branded marketers maintain aggressive purchasing staffs, and oil companies compete vigorously on various "bid" markets.

1) Minerals Industry Surveys, op. cit.

2) So-called unbranded sales at retail by independent oil companies, commercial sales direct to users and sales to government aggregate to somewhat over 30 percent of total gasoline sales.

Prices on the various unbranded markets typically are close to short-run marginal costs. This indicates that the industry is highly competitive. Because the competitive nature of the refining industry affects its ability to pass cost increases on to consumers in the short run, we shall discuss it in some detail.

"Bid" prices, appearing in various industry publications, give the price at which product is sold, usually to governmental agencies or to other large buyers. For example, for the year starting November 1970 a major oil company bid 10.74 cents per gallon on 94 octane gasoline to be delivered in Dallas, Texas.[1] This delivery is in small lots by truck. In order to estimate realization at the refinery gate we must deduct the following costs: delivery, terminalling in Dallas and pipeline transportation from the refinery. Typical delivery costs are about 1/2 cent per gallon, terminalling about 1/4 cent, pipeline costs also about 1/4 cent. Thus the refinery netback on the Gulf Coast on this sale was at least 9 3/4 cents per gallon. It might but was unlikely to have been as high as 10 1/4 cents if surplus capacity was present in the distribution system.

Besides raw material costs the marginal cost of manufacturing gasoline includes cost of additives, mostly lead, which is roughly 1/2 cent per gallon, plus refinery fuel, catalyst and a few minor items which together cost about another one cent per gallon. Since considerable spare capacity to make gasoline existed during the period covered by this sale, it is reasonable to assume that the bidding company could, on the margin, convert crude oil with only a small by-product output. Thus we need only to add

1) Platt's Oilgram, October 4, 1971.

the cost of crude oil to manufacturing costs, then deduct the sum from the refinery netback to arrive at a differential over marginal costs. During the bid period crude oil delivered to a Gulf Coast refinery was priced at 8 cents per gallon, or slightly more. Thus the marginal cost of gasoline manufactured for this bid was about 9 1/2 cents per gallon, or somewhat more. Since the refinery netback may have been as low as 9 3/4 cents per gallon, and surely was no higher than 10 1/4 cents, it seems clear that short-run marginal refinery cost and the revenue received from this sale were close together.

We believe this example to be typical of the current market conditions. It shows together with our estimate of typical refining costs (see B.1 above) that current prices are inadequate to provide an incentive to increase refining capacity. Hence some price increases are to be expected quite apart from those which will be caused by the costs associated with the impact of environmental standards.

As was discussed earlier, foreign competition is essentially non-existent except in the case of residual oil sold primarily on the eastern seaboard. This product is sold almost entirely without brand identification and on a specification basis. Prices are determined by supply and demand on the international market.

APPENDIX

The Viability of Small Refineries

Unfortunately no data are available on the economic viability of small refiners. In order to make a useful guess about their operations we examined the small refineries which have discontinued operations in the last five years. Due to changes in ownership it was not possible to be sure that we correctly identified all plants. Hence our analysis may not be completely accurate. We identified, from the total refinery population of about 260[1)], 25 refineries operating in 1966 which had ceased operating by 1971. Of these about 18 apparently made fuel products and the balance were primarily asphalt plants and lube plants.

The viability of an asphalt refinery is greatly dependent upon the local asphalt market. A reduced local demand may be met more economically by shipment of product into the area. All of the closed asphalt plants except one were very small. The exception was on the Eastern Seaboard. That plant may have become uneconomic due to the imposition of crude oil import limitations.

On the 18 fuel producers, 5 reported no equipment except a crude distillation unit. Of the other 13, seven were closed as a result of consolidations with other plants, in almost all cases owned by the same firm. These refineries tended to be the larger of the group of closed plants. Several were located in metropolitan areas, and the resultant consolidated units had larger throughputs than the sum of the previously separate plants. It appears that some of the consolidations were instigated by land limitations.

1) Oil and Gas Journal, March 28, 1966, pp. 154-172.

Deducting the eight consolidated plants, there remained a group of five fuel producing refineries which were closed in the five year period. The largest of them had a throughput of less than 15,000 barrels per day. Their total throughput was 38,500. These five refineries account for about .4% of industry capacity. The closing of 17 refineries, including seven asphalt plants, in five years out of a population of 260 refineries is a small percentage. Consequently we conclude that small firms are, on the whole, viable business enterprises. However, their viability is enhanced (or even made possible) by the value of import tickets they are granted.

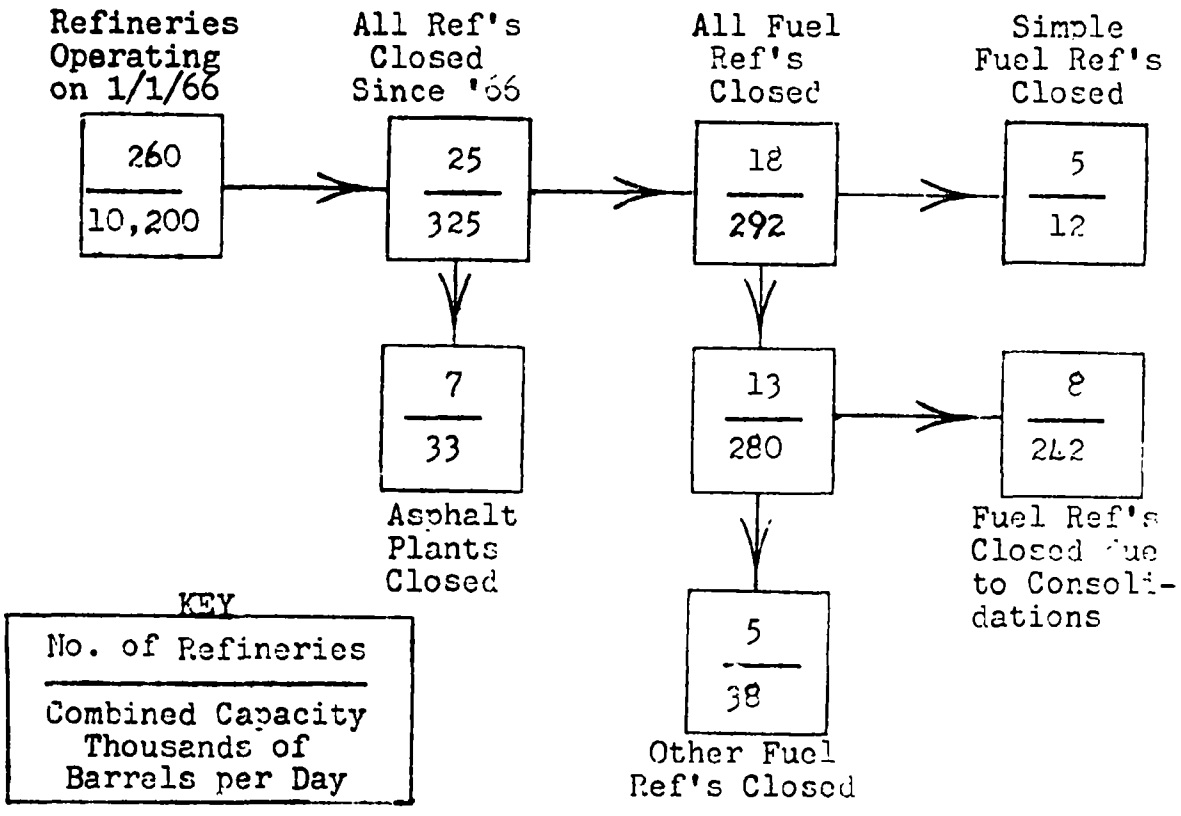

EXHIBITS

Exhibit 1

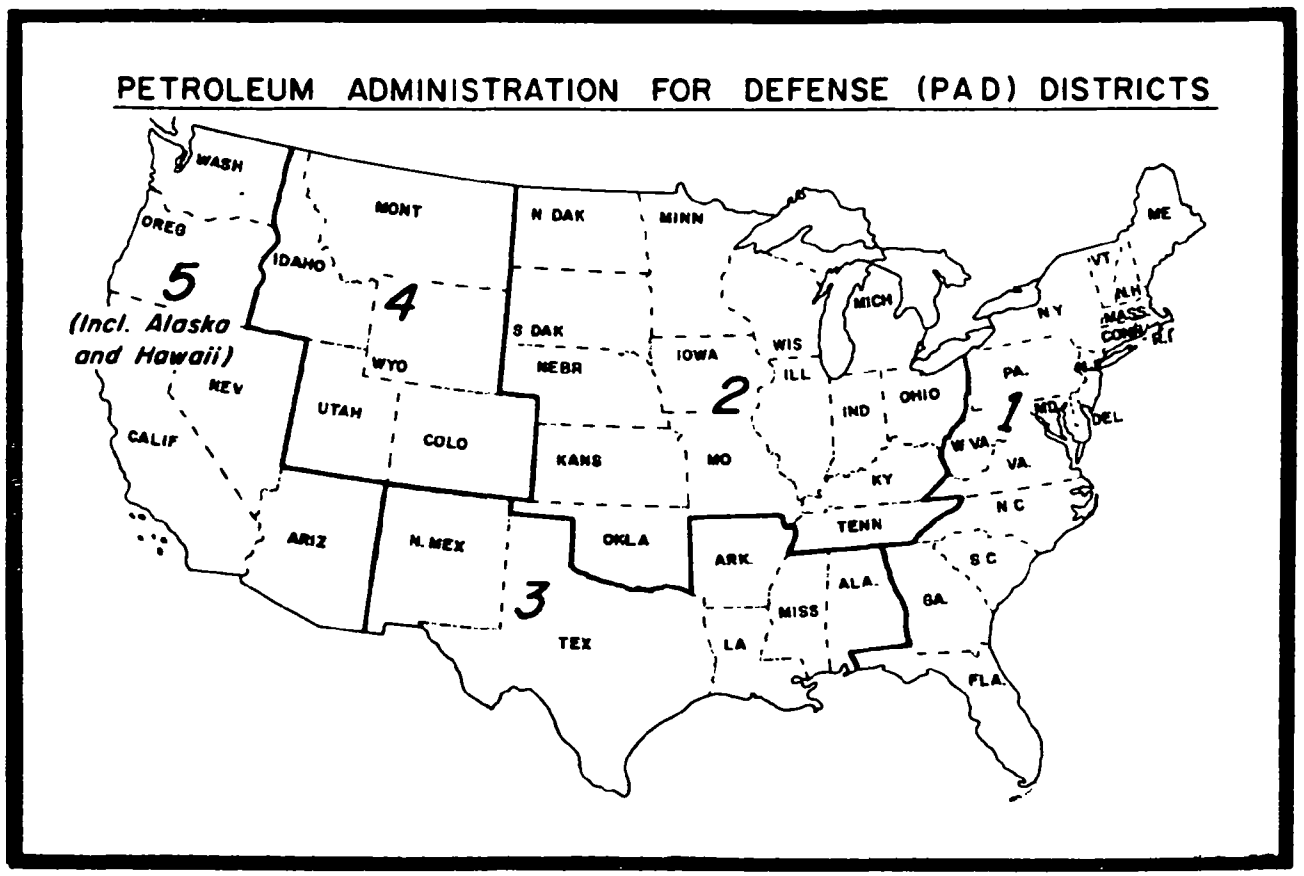
PETROLEUM ADMINISTRATION FOR DEFENSE (PAD) DISTRICTS
WASH
OREG
5
(Incl. Alaska and Hawaii)
NEV
CALIF
IDAHO
MONT
4
WYO
UTAH
COLO
ARIZ
N. MEX
N DAK
S DAK
NEBR
KANS
OKLA
3
TEX
MINN
IOWA
MO
2
WIS
ILL
MICH
IND
OHIO
KY
TENN
ARK.
LA
MISS
ALA.
GA.
FLA.
S C
N C
VA.
W VA.
PA.
N Y
1
MD.
DEL
VT.
N.H.
MASS.
CONN.
R.I.
ME

Exhibit 2

DOMESTIC CONSUMPTION
000's Barrels Per Day

Product	Year	P. A. D. DISTRICT I	II	III	IV	V	U.S.
Automotive Gasoline	1965	1,578	1,635	566	141	673	4,593
	1966	1,649	1,695	607	148	709	4,808
	1967	1,706	1,748	621	151	732	4,958
	1968	1,817	1,833	660	164	787	5,261
	1969	1,904	1,930	705	170	817	5,526
	1970	2,000	2,008	729	186	861	5,784
Jet Fuel Naphtha Type	1965	94	47	40	7	80	268
	1966	88	47	50	7	86	278
	1967	81	51	53	7	114	306
	1968	93	51	70	8	124	346
	1969	80	46	59	8	104	297
	1970	66	43	37	7	94	247
Jet Fuel Kerosene Type	1965	119	71	33	9	102	334
	1966	148	82	31	12	118	391
	1967	205	107	37	16	153	518
	1968	238	128	43	19	181	609
	1969	265	145	50	19	215	694
	1970	284	150	50	20	212	716
(Ex Jet) Kerosene	1965	141	82	34	7	3	267
	1966	155	80	32	6	4	277
	1967	145	85	37	5	2	274
	1968	153	84	38	4	2	281
	1969	144	83	39	6	3	275
	1970	126	83	43	6	5	263
Distillates	1965	1,077	636	139	59	215	2,126
	1966	1,102	661	134	62	225	2,184
	1967	1,164	669	127	60	222	2,242
	1968	1,250	685	157	71	226	2,389
	1969	1,272	715	176	72	231	2,466
	1970	1,308	738	191	71	232	2,540
Residual	1965	1,070	192	68	30	248	1,608
	1966	1,173	177	64	29	273	1,716
	1967	1,250	171	75	29	261	1,786
	1968	1,277	170	68	31	280	1,826
	1969	1,412	173	78	35	281	1,979
	1970	1,643	190	87	25	257	2,202

U. S. SALES OF DISTILLATE FUEL OIL, BY USES 1964 - 1969

(Thousands of Barrels)

Year	Vessels	Gas and Electric Public-Utility Power Plants[1]	Railroads	Fuel for Oil Company Use	Industrial Use
1969.	18,877	12,158	86,429	13,867	42,456
1968.	18,235	8,509	84,030	9,975	45,795
1967.	17,478	2,858	88,688	8,997	44,997
1966.	16,642	3,612	89,104	10,485	47,108
1965.	15,532	3,661	86,436	10,430	42,484
1964.	16,001	3,849	88,198	10,576	36,007

				Total Domestic Sales	
	Heating Oils	Military Use	Miscel-laneous Uses	Excluding Fuel for Oil Company Use	All Uses
1969.	511,768	13,958	200,787	886,433	900,300
1968.	510,682	12,593	183,281	863,125	873,100
1967.	501,026	17,325	147,831	820,203	829,200
1966.	472,778	16,303	153,681	799,228	809,713
1965.	475,992	14,953	137,403	776,461	786,891
1964.	451,860	13,609	127,451	736,975	747,551

[1] Beginning in 1967, represents use by electric public-utility power plants only. Beginning in 1968, includes data for gas turbine plants.

Authority: Bureau of Mines, Mineral Industry Surveys, "Shipments of Fuel Oil and Kerosine," Annual.

Exhibit 2a

Smith, Stubbs & Gunnison

U. S. SALES OF RESIDUAL FUEL OIL, BY USES, 1964 - 1969

(Thousands of Barrels)

Year	Vessels	Gas and Electric Public-Utility Power Plants[1]	Railroads	Fuel for Oil Company Use	Industrial Use
1969	85,581	247,634	3,381	36,559	130,654
1968	87,575	184,956	4,296	39,329	135,664
1967	80,680	158,417	5,494	37,880	131,819
1966	73,641	140,642	3,792	35,177	141,050
1965	73,639	114,884	4,001	34,354	140,602
1964	83,024	97,595	5,350	43,098	157,176

				Total Domestic Sales	
	Heating Oils	Military Use	Miscel-laneous Uses	Excluding Fuel for Oil Company Use	All Uses
1969	178,095	31,750	8,875	685,970	722,529
1968	174,326	34,990	8,348	630,155	669,484
1967	175,990	40,465	8,794	601,659	639,539
1966	167,471	41,861	10,338	578,795	613,972
1965	156,254	40,380	10,004	539,764	574,118
1964	126,215	35,568	8,606	513,534	556,632

[1]Beginning in 1967, represents use by electric public-utility power plants only.

Authority: Bureau of Mines, Mineral Industry Surveys, "Shipments of Fuel Oil and Kerosine," Annual.

REFINERY AND TERMINAL PRICES[1], 1966-1970
- CARGOES -

	1966	1967	1968	1969	1970
			Cents Per Gallon		
Motor Gasoline 100 Octane	13.26	13.18	12.63	12.99	12.58
Motor Gasoline 94 Octane	11.37	11.31	10.64	10.99	10.5[illegible]
No. 2 Fuel oil - Gulf	8.74	9.48	9.40	10.13	
No. 2 Fuel oil - New York harbor	9.51	10.16	10.34	10.30	10.25
			$ Per Barrel		
Bunker C - Gulf	2.10	1.98	1.67	1.47	2.44
Bunker C - Gulf (Max. 0.6% S)	2.35	2.22	2.24	2 03	3 01

[1]Annual averages of high and low posted price.
Note: Posted prices are not always transaction prices.

Source: Platt's Oil Price Handbook and Oilmanac, 1970 prices.

FUNCTIONAL CHARACTERIZATION OF PETROLEUM REFINERY PROCESSES

A. HYDROCARBON REFINING PROCESSES

MOLECULAR CHARACTERISTIC ACTED UPON	PRINCIPAL PROCESS PURPOSE: Separation	PRINCIPAL PROCESS PURPOSE: Alteration (Conversion)
SIZE (Molecular Weight)	Distillation (atmospheric and vacuum crude fractionation, naphtha splitting, depropanizing, debutanizing, vacuum flashing)	Thermal Cracking (visbreaking, coking) Catalytic Cracking
	Absorption (recovery of ethane- or propane-and-heavier from saturated or cracked gas)	Hydrocracking Alkylation Polymerization
	Extraction (deasphalting)	
SHAPE (Molecular Structure)	Extraction (solvent extraction for separating aromatics from naphtha, lube oil, etc.)	Catalytic Reforming Isomerization
	Crystallization (dewaxing of lube oil)	

B. TREATING PROCESSES

Hydrotreating

Caustic Treating (Merox, Bender, etc.)

Clay Treating

SCHEMATIC FLOW DIAGRAM OF PETROLEUM REFINERY

A. PETROLEUM PRODUCT MANUFACTURING

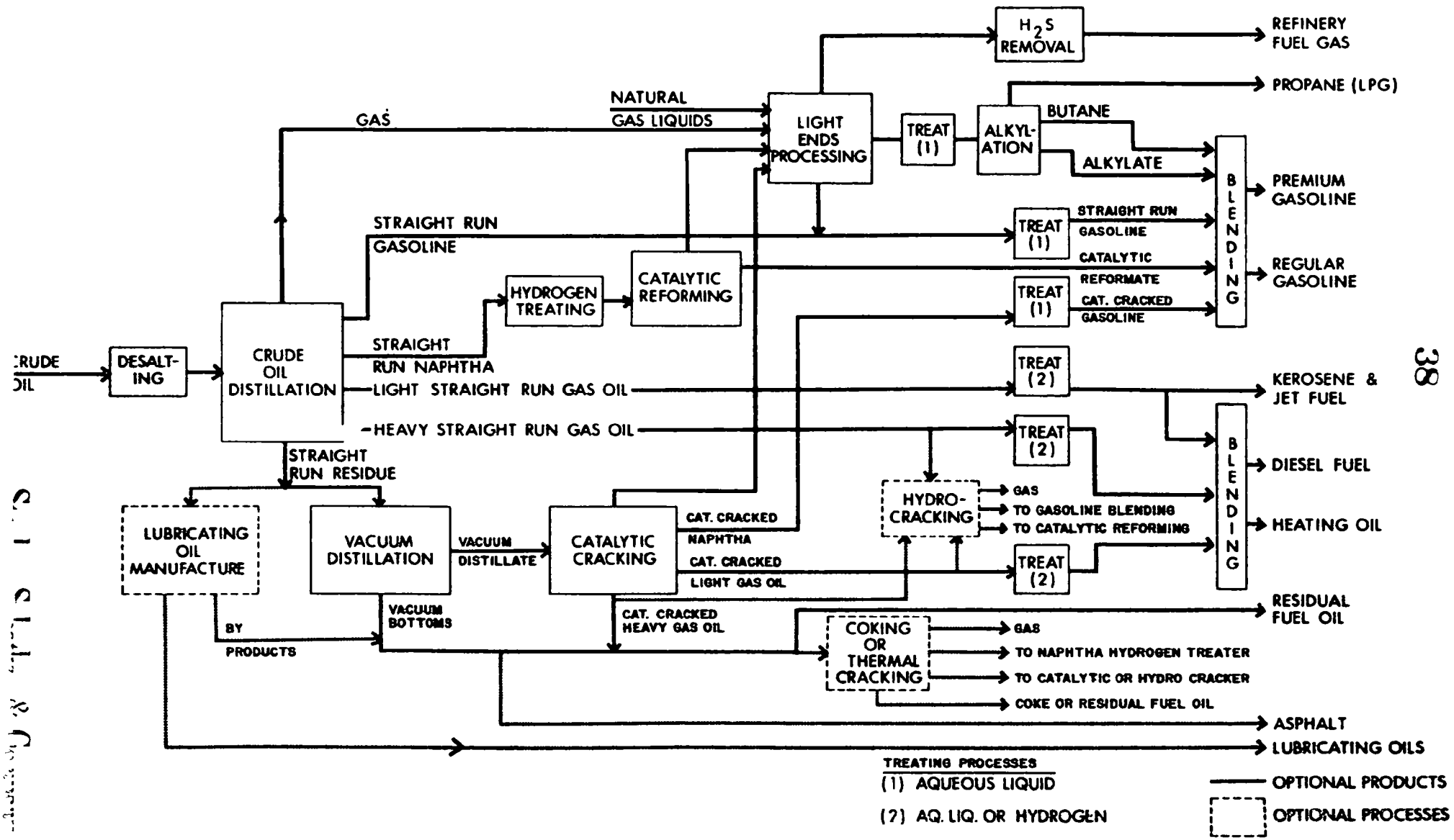

Exhibit 5

Exhibit 6.

REFINERY ENVIRONMENTAL CONTROL PROCESSES

Environmental Problem	Control Process(es)
Hydrogen sulfide. Reacts to form sulfur oxides if burned.	1. Gases containing hydrogen sulfide (H_2S) are treated with a liquid (usually an amine solution) which preferentially absorbs H_2S. The H_2S is recovered by stripping it from the liquid. It is subsequently converted to sulfur and recovere 2. Sour water stripping. Aqueous effluents from refinery processes which contain H_2S are steam stripped to remove the H_2S.
Sulfur oxides. Emitted to the atmosphere with flue gases from burning fuels containing sulfur. Irritating to eyes and respiratory system. Also cause opaque "plume."	1. Hydrodesulfurization. The sulfur-containing oil is reacted with hydrogen at elevated temperatures and pressures in the presence of a solid catalyst. Sulfur is converted to H_2S. [Hydrogen for the hydrodesulfurization process is generally recovered as a by-product of catalytic reforming or manufactured by converting either natural gas or refinery by-product gases].

Environmental Problem	Control Process(es)
	2. Stack Gas Scrubbing. The sulfur-oxide-containing combustion gas is contacted with a solid or liquid material that preferentially absorbs the sulfur oxides. Sulfur oxides are then generally recovered in concentrated form from the absorbing material and converted to sulfur or sulfuric acid.
Carbon monoxide. Present in stack gas from catalytic cracking units. Poisonous to animal life.	1. Combustion. The stack gas is enriched with fuel gas and burned. Useful heat is recovered and the carbon monoxide is burned to harmless carbon dioxide.
Smoke. Produced when insufficient air is used in firing boilers and furnaces or by incomplete incineration of process materials vented and flared because of upsets.	1. Proper control of boilers and furnaces. 2. Incinerate vented materials in a "smokeless flare."
Soot and fly ash. Entrained in stack gas from furnaces or boilers fired with residual, coal or coke.	1. Electrical precipitation.
Hydrocarbon vapors. Evaporated from tanks or small leaks and spills. React in atmosphere to cause smog.	1. Install floating roofs or vapor recovery system on tanks. 2. Good housekeeping practices - fix leaks, maintain pump seals, clean up spills, etc.

Environmental Problem	Control Process(es)
Oil (and water-insoluble non-hydrocarbon liquid organic compounds) entrained in refinery waste water. Harmful to aquatic life and dirty.	1. API Separator. Oil is allowed to rise to the surface of the contaminated water and is skimmed off. 2. Aeration. Air is blown through the contaminated water. Oil rises to the surface as froth and is skimmed off.
Water-soluble organic compounds. Dissolved in refinery waste water. Many compounds toxic to aquatic life. Also reduce oxygen content of receiving water body which leads to aquatic life damage. May also smell badly.	1. Biological treatment. a) Trickle filter. Contaminated water is trickled through a pile of rocks on which live colonies of bacteria. The bacteria convert the contaminants into harmless compounds (mostly water and carbon dioxide). b) Activated sludge treater. Contaminated water is contacted with a suspension of bacterial colonies, nutrients and air. The bacteria convert the contaminants into harmless compounds. Clean water is separated by settling of bacterial sludge.
Phenolic compounds. Produced in cracking processes and extracted from cracked products. Toxic to aquatic life.	1. Sold to Chemical industry. 2. Incinerated. 3. Barged to sea and dumped. 4. Pumped into underground formation which is sealed to prevent contaminating fresh water. 5. Hydrotreat the cracked product to eliminate the need to extract phenols.

Environmental Problem	Control Process(es)
Fluid catalyst. Entrained in stack gas from catalytic cracking units.	1. Centrifugal separation. The stack gas is passed through a stationary centrifugal device (cyclone) at high speed. The resultant force throws the dust to the outside wall from which it is collected. 2. Electrical precipitation. The stack gas is passed between metal plates which are electrically charged to a high voltage. The dust is attracted to, and settles on, the plates from which it is recovered.

SCHEMATIC FLOW DIAGRAM OF PETROLEUM REFINERY

B. POLLUTANT COLLECTION AND TREATMENT

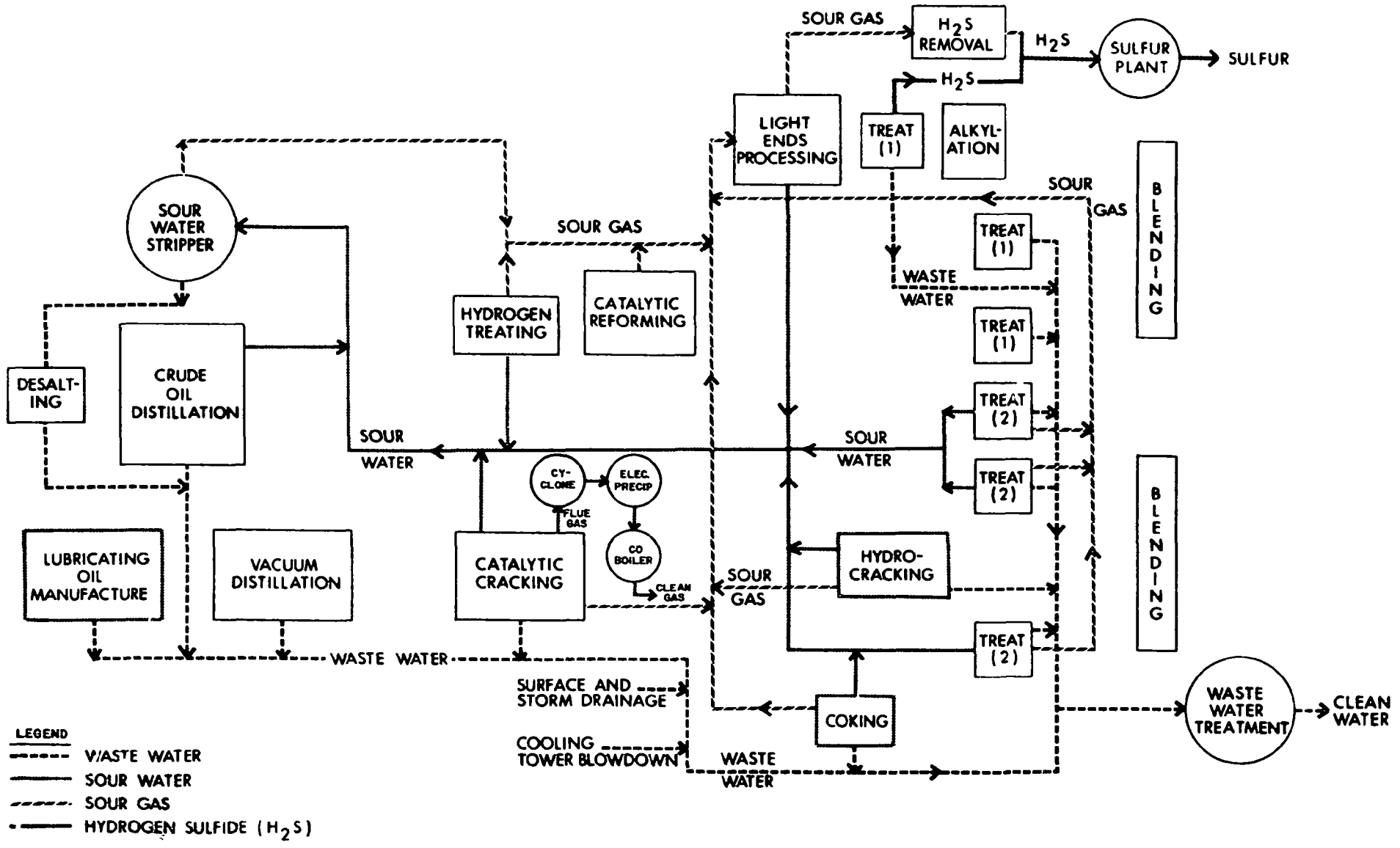

Stephen Sobotka & Company

Exhibit 7

NUMBER AND CAPACITY OF REFINERIES, BY STATES, AS OF JANUARY 1, 1969

State	Number of Refineries			Capacity (Barrels Per Day)				
	Operating	Shutdown	Total Operating and Shutdown	Operating	Shutdown	Total Operating and Shutdown	Building[1]	Total Operating Shutdown and Building
Alabama	5	1	6	27 870	6,500	34,370	0	34,370
Alaska	1	0	1	20,000	0	20,000	3,300	23,300
Arkansas	6	0	6	91 000	0	91,000	0	91,000
California	33	2	35	1,528,050	11,500	1,539,550	74 800	1,614 350
Colorado	4	1	5	41,480	5 000	46,480	0	46,480
Delaware	1	0	1	140,000	0	140,000	0	140,000
Florida	1	0	1	3,000	0	3,000	0	3,000
Georgia	2	0	2	8,600	0	8,600	0	8,600
Hawaii	1	0	1	35,000	0	35,000	0	35,000
Illinois	12	1	13	706,220	6,330	712,550	51,000	763,550
Indiana	11	0	11	579,000	1,500	580,500	0	580,500
Kansas	12	0	12	392,010	0	392,010	0	392,010
Kentucky	4	0	4	129,000	0	129,000	10,000	139 000
Louisiana	17	0	17	1,191 150	1,000	1 192,150	49,000	1,241,150
Maryland	2	0	2	20,000	0	20,000	0	20 000
Michigan	7	3	10	145 950	28,750	174,700	0	174,700
Minnesota	3	0	3	138 300	0	138 300	0	138 300
Mississippi	4	1	5	168 700	1,500	170 200	0	170,200
Missouri	1	0	1	83,000	0	83 000	0	83,000
Montana	9	2	11	125,500	5,550	131,050	1 000	132 050
Nebraska	1	0	1	4,000	0	4 000	0	4 000
Nevada	0	1	1	0	1 250	1,250	1,200	2,450
New Jersey	6	2	8	523,500	35 000	558 500	0	558,500
New Mexico	6	0	6	42 700	0	42 700	0	42 700
New York	2	0	2	79 000	0	79 000	6,000	85,000
North Dakota	2	0	2	54,100	900	55,000	0	55,000
Ohio	9	1	10	478,200	12,500	490,700	13,000	503,700
Oklahoma	14	1	15	449,300	900	450,200	0	450,200
Oregon	1	0	1	12,000	0	12,000	0	12,000
Pennsylvania	13	0	13	645 320	19 000	664 320	5,000	669,320
Rhode Island	1	0	1	7,500	0	7,500	0	7,500
Tennessee	1	0	1	27,500	0	27 500	0	27,500
Texas	48	3	51	3 126,679	16,500	3 143 179	140,200	3,283,379
Utah	5	0	5	112,600	0	112,600	0	112,600
Virginia	1	0	1	43,600	0	43,600	0	43,600
Washington	5	0	5	219,000	0	219,000	0	219,000
West Virginia	2	0	2	9,200	0	9,200	0	9,200
Wisconsin	1	1	2	25 000	5,000	30 000	0	30,000
Wyoming	10	0	10	142,800	5,000	147,800	0	147,800
U. S. total	264	20	284	11,575,829	163,680	11,739,509	362,500[2]	12,102,009[2]

[1] "Building" represents additional capacity under construction at existing refineries, as well as new plants being built

[2] Totals include 8,000 b/d refinery under construction in Arizona

Authority Bureau of Mines, "Petroleum Refineries in the United States"

Reproduced from best available copy.

REFINERIES

DISTRIBUTION BY SIZE

1971

Refinery Capacity 000'/B/CD*	REFINERIES Number	Per Cent of Total	Cum. %	CAPACITY 000's B/CD*	Per Cent of Total	Cum %
Below 4	38	15	--	82	.6	--
4 to 6 9	35	14	29	187	1.5	2 1
7 to 14.9	37	12	41	329	2.6	4 7
MEDIAN 25	--	--	50	--	--	8.1
15 to 29.9	40	16	57	909	7 2	11 9
30 to 49.9	32	13	70	1306	10.4	22 3
50 to 69.9	17	7	77	970	7 7	30.0
70 to 99.9	22	9	86	1854	14.7	44 7
100 to 199	22	9	95	2940	23.3	68 0
200 and up	14	5	100	4028	32 0	100.0
TOTAL	251	100%	100%	12605	100%	100%
MEAN	--	--	--	50	--	--

*Thousands of barrels per calendar day.

Source: Oil and Gas Journal, 3/22/71, pp. 98ff
Data as of 1/1/71 - with minor adjustments.

REFINERIES

DISTRIBUTION BY SIZE

1966

Refinery Capacity 000'/B/CD*	REFINERIES Number	Per Cent of Total	Cum. %	CAPACITY 000's B/CD*	Per Cent of Total	Cum %
Below 4	53	20	20	111	1.1	1.1
4 to 6.9	25	10	30	122	1.2	2.3
7 to 14.9	35	14	44	371	3 6	5.9
MEDIAN 20	--	--	50	--	--	8.7
15 to 29.9	46	17	61	1008	9.8	15.7
30 to 49.9	38	15	76	1512	14.8	30.5
50 to 69.9	15	6	82	860	8 4	38.9
70 to 99.9	20	8	90	1595	15.6	54 5
100 to 199	20	8	98	3018	29.4	83 9
200 and up	6	2	100	1650	16.1	100.0
TOTAL	258	100%	--	10247	100%	--
MEAN				40		

*Thousands of barrels per calendar day

Source: Oil and Gas Journal, 3/28/66, pp. 154ff
Data as of 1/1/66 - with minor adjustments

NUMBERS OF REFINERIES BY SIZE CLASSES 1966–1971

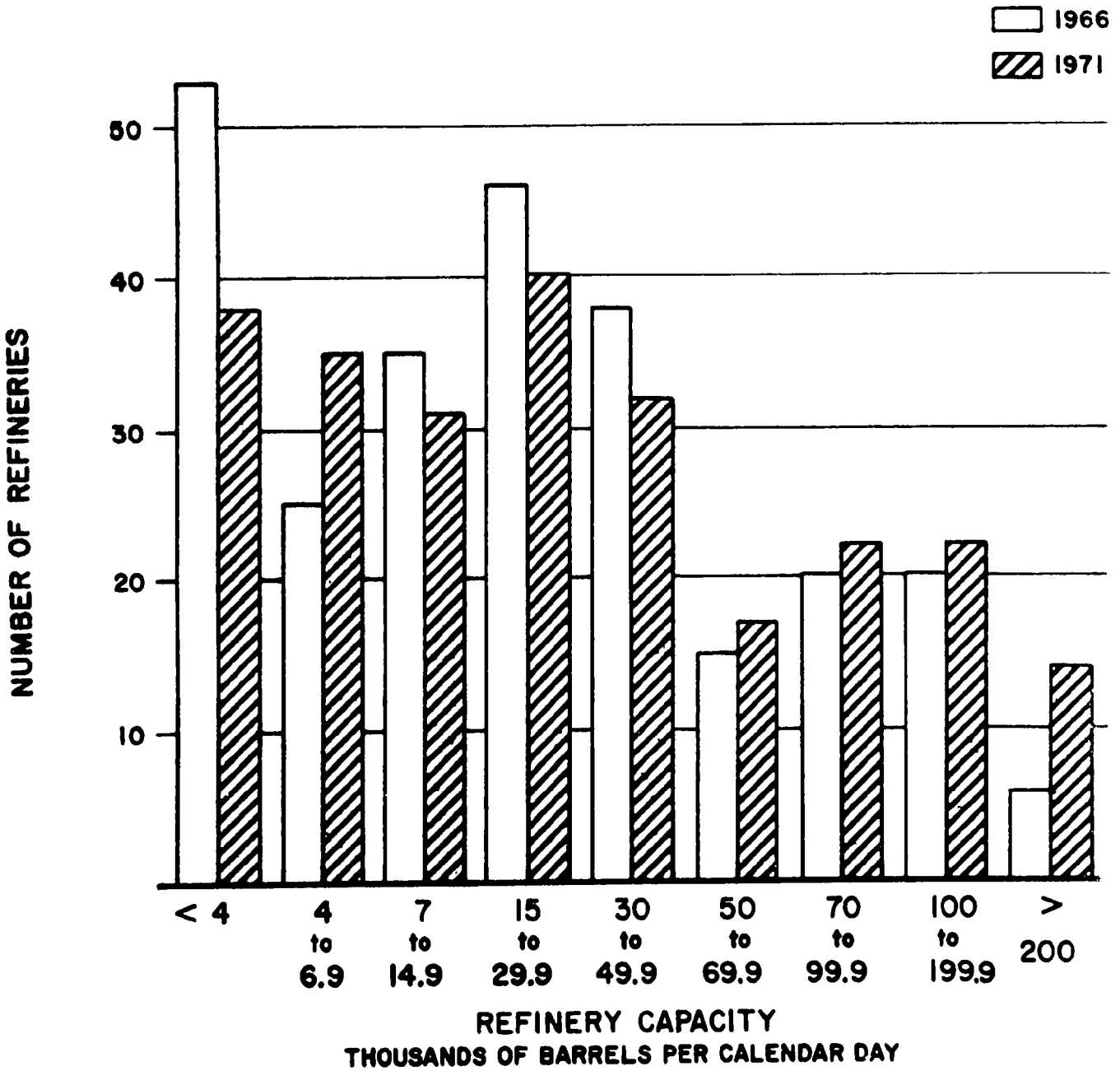

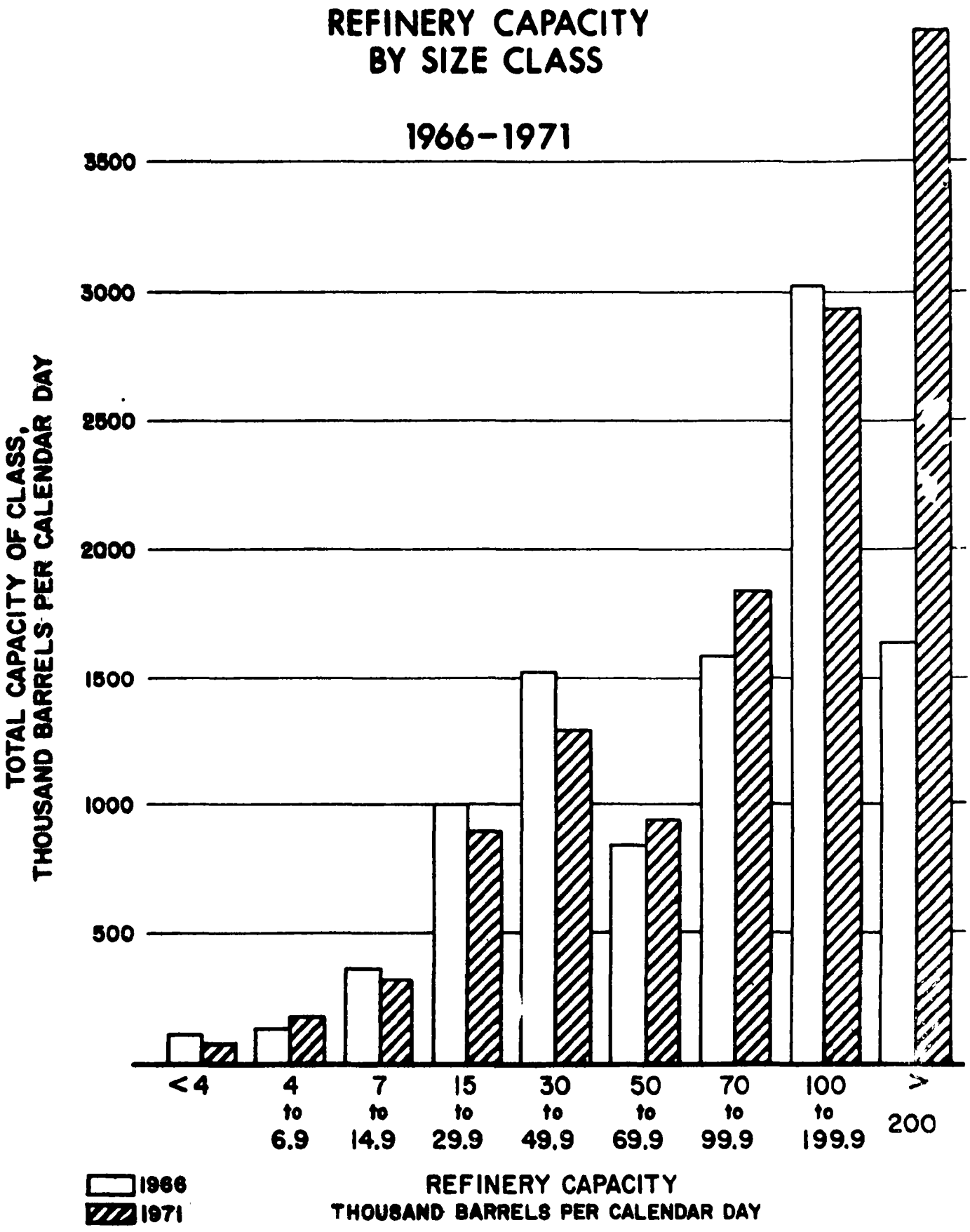
REFINERY CAPACITY
BY SIZE CLASS
1966-1971
TOTAL CAPACITY OF CLASS, THOUSAND BARRELS PER CALENDAR DAY
3500
3000
2500
2000
1500
1000
500
<4
4 to 6.9
7 to 14.9
15 to 29.9
30 to 49.9
50 to 69.9
70 to 99.9
100 to 199.9
> 200
1966
1971
REFINERY CAPACITY
THOUSAND BARRELS PER CALENDAR DAY

EMPLOYMENT, EARNINGS AND PAYROLLS IN PETROLEUM AND ALL MANUFACTURING, 1964-1968

YEAR	Total Number of Employees[2] (Thousands)	Production and Related Workers[1] Number of Workers (Thousands)	Average Weekly Earnings	Average Hours Worked Weekly	Average Hourly Earnings
		ALL MANUFACTURING			
1968	19,740	14,485	$122.51	40.7	$3.01
1967	19,434	14,300	114.90	40.6	2.83
1966	19,214	14,297	112.34	41.3	2.72
1965	18,062	13,434	107.53	41.2	2.61
1964	17,274	12,781	102.97	40.7	2.53
		PETROLEUM REFINING			
1968	151	92	$166.27	42.2	$3.94
1967	148	90	159.09	42.2	3.77
1966	148	89	151.56	42.1	3.60
1965	148	89	145.05	41.8	3.47
1964	150	90	139.52	41.4	3.37

[1] Includes non-salaried workers.

[2] Includes both salaried and non-salaried employees.

Authority: Bureau of Labor Statistics, "Employment and Earnings." Reprinted in Petroleum Facts & Figures, API, 1971, pp. 526.

AVERAGE OPERATING COSTS OF U. S. REFINERIES, 1965-1969

(Cents Per Barrel)

Year	Purchased Fuel	Total Labor	Purchased Power	TEL, Chemicals and Supplies	Maintenance, Materials
1969[1]	15.8	47.7	3.8	24.6	7.6
1968	15.5	46.1	3.9	25.5	7.3
1967	16.3	46.3	3.8	26.4	7.1
1966	14.5	44.0	3.3	26.8	7.0
1965	13.2	44.3	3.5	24.5	6.9

	Insurance and Taxes	Royalties or Research	Obsolescence and Improvements	Interest on Capitalization	Total Costs
1969[1]	5.4	9.2	11.7	11.2	137 0
1968	5.5	7.7	11.8	11.4	134 7
1967	5.2	6.3	11.4	10.9	133 7
1966	5.2	4.8	11.3	10.8	127 7
1965	5.1	4.6	11.0	9.4	122 5

[1] Preliminary.

Authority: Wilbur L. Nelson, Petroleum Refinery Engineering Consultant

Source: Petroleum Facts & Figures, API, 1971, p. 209.

RATE OF RETURN ON NET WORTH FOR PETROLEUM, MANUFACTURING, AND ALL INDUSTRY IN THE U. S., 1964 - 1969

Year	(Per Cent) Petroleum Industry	All Manufacturing Industry	All Industry
1969	12.1	12 5	10.4
1968	13.1	13.3	10.9
1967	12.8	12.6	10.6
1966	12.6	14.2	11.3
1965	11.9	13.9	11.1
1964	11.5	12.6	10.3

Source: First National City Bank, "Monthly Economic Letter," April. Reprinted in Petroleum Facts & Figures, API, 1971, pp. 513

ESTIMATED INVESTMENT IN FIXED ASSETS BY THE U.S. PETROLEUM INDUSTRY, 1969

(As of December 31)

	Gross Investment (Thousands of Dollars)	Per Cent of Total	Net Investment[1] (Thousands of Dollars)	Per Cent of Total
Production:				
Crude oil and natural gas.	$49,900,000	53.6	$24,800,000	51.3
Natural gasoline and cycling plants	3,025,000	3.2	1,560,000	3.2
Total production	59,925,000	56.8	26,360,000	54.5
Transportation:				
Pipelines	6,175,000	6.7	3,350,000	6.9
Marine.	1,150,000	1.2	515,000	1.1
Tank cars and motor transport. . .	675,000	.7	325,000	.7
Total transportation	8,000,000	8.6	4,190,000	8.7
Manufacturing:				
Refineries.	11,925,000	12.8	5,075,000	10.5
Chemical plants.	6,475,000	7.0	3,750,000	7.8
Total manufacturing	18,400,000	19.8	8,825,000	18.3
Marketing	11,550,000	12.4	7,600,000	15.7
Other.	2,250,000	2.4	1,350,000	2.8
Grand total	$93,125,000	100.0	$48,325,000	100.0

[1]Gross investment minus accumulated reserves for depreciation, depletion, and amortization.

Authority: Energy Economics Department, The Chase Manhattan Bank.

ESTIMATED FINANCIAL DATA FOR THE U.S. PETROLEUM INDUSTRY, 1965-1969

(Thousands of Dollars)

	1969	1968	1967	1966	1965
			Capital Expenditures		
Production:					
Crude oil and natural gas[1]	$ 4,525,000	$ 4,675,000	$ 3,750,000	$ 3,600,000	$ 3,600,000
Natural gasoline and cycling plants	225,000	250,000	275,000	170,000	160,000
Total production	4,750,000	4,925,000	4,025,000	3,770,000	3,760,000
Transportation:					
Pipelines	300,000	425,000	360,000	275,000	225,000
Marine	100,000	50,000	40,000	25,000	40,000
Tank cars and motor transport	50,000	35,000	40,000	60,000	35,000
Total transportation	450,000	510,000	440,000	360,000	300,000
Manufacturing:					
Refineries	950,000	800,000	775,000	775,000	600,000
Chemical plants	575,000	650,000	825,000	800,000	525,000
Total manufacturing	1,525,000	1,450,000	1,600,000	1,575,000	1,125,000
Marketing	1,250,000	1,150,000	1,250,000	1,100,000	1,000,000
Other	200,000	315,000	335,000	320,000	190,000
Total capital expenditures	$ 8,175,000	$ 8,350,000	$ 7,650,000	$ 7,125,000	$ 6,375,000

[1]Includes cost of drilling dry holes and lease acquisitions but excludes exploration expenses and lease rentals charged to income account. Includes offshore lease purchases: 1968, $1.5 billion; 1967, $560 million; 1966, $260 million; 1965, $100 million.

(Cont'd)

Exhibit 15b

Stephen Sobotka & Company

ESTIMATED FINANCIAL DATA FOR THE U.S. PETROLEUM INDUSTRY, 1965-1969

(Thousands of Dollars)

	1969	1968	1967	1966	1965
			Gross Assets Employed[1]		
Current assets	$ 18,850,000	$ 18,250,000	$ 17,000,000	$ 15,750,000	$ 14,300,000
Fixed assets	93,125,000	88,575,000	83,800,000	79,175,000	75,000,000
Other assets	3,000,000	2,750,000	1,800,000	1,800,000	1,600,000
Total gross assets employed	$114,975,000	$109,575,000	$102,600,000	$ 96,725,000	$ 90,900,000

[1]As of December 31.

Authority: Energy Economics Department, The Chase Manhattan Bank.
Reprinted in Petroleum Facts & Figures, 1971, pp. 508/9.

Exhibit 15b
(Cont'd.)

ESTIMATED FINANCIAL DATA FOR THE U.S. PETROLEUM INDUSTRY, 1965-1969
(Thousands of Dollars)
(Cont'd)

	1969	1968	1967	1966	1965
	Gross Investment In Fixed Assets[1]				
Production:					
Crude oil and natural gas[1]	$ 49,900,000	$ 47,875,000	$ 45,915,000	$ 44,265,000	$ 42,500,000
Natural gasoline and cycling plants	3,025,000	2,875,000	2,510,000	2,335,000	2,200,000
Total production	52,925,000	50,750,000	48,425,000	46,600,000	44,700,000
Transportation:					
Pipelines	6,175,000	5,960,000	5,610,000	5,300,000	5,100,000
Marine	1,150,000	1,115,000	1,115,000	1,100,000	1,100,000
Tank cars and motor transport	675,000	650,000	625,000	600,000	550,000
Total transportation	8,000,000	7,725,000	7,350,000	7,000,000	6,750,000
Manufacturing:					
Refineries	11,925,000	11,200,000	10,525,000	9,875,000	9,525,000
Chemical plants	6,475,000	6,050,000	5,550,000	4,800,000	3,975,000
Total manufacturing	18,400,000	17,250,000	16,075,000	14,675,000	13,500,000
Marketing	11,550,000	10,700,000	10,000,000	9,200,000	8,550,000
Other	2,251,000	2,150,000	1,950,000	1,700,000	1,500,000
Total gross investment in fixed assets	$ 93,125,000	$ 88,575,000	$ 83,800,000	$ 79,175,000	$ 75,000,000

[1]As of December 31

(Cont'd.)

ESTIMATED PETROLEUM REFINING
CAPITAL REQUIREMENTS 1972 - 1981

		Barrel/Day	Billion $
Refinery capacity, 1/1/72 (Oil & Gas Journal, 3/22/71)		13,070,000	
Growth in capacity will be 3½%/yr. (estimated)			
Resultant forecast capacity, 1/82		18,430,000	
Increase in capacity, 1972/1981		5,360,000	
Unit capital cost of new capacity is about $1400 per barrel per day (Oil Daily, October 12, 1971)			
Total capital cost for new capacity, 1972/1981			7.5
Average capacity during the decade		15,750,000	
Unit capital cost to replace and modernize existing capacity is $50/yr. per bbl/d. (from data published by W. L. Nelson in Oil & Gas Journal)			
Total capital cost for maintaining existing capacity, 1972/1981			7.9
Total capital cost to conform to environmental standards in refinery operations (Environmental Protection Agency, Oct. 1971)	1972/1976		0.9
	1977/1981		0.1
Total cost to convert to no/low lead gasoline, 1972/1981 (EPA			3.0
Total cost to convert to low sulfur fuels, 1972/1981 (EPA)			2.0
Total Capital Requirement			$21.4