PB81-191116

Selective Catalytic Reduction and NOx Control in Japan

Radian Corp.
Austin, TX

Prepared for

Industrial Environmental Research Lab.
Research Triangle Park, NC

Mar 81

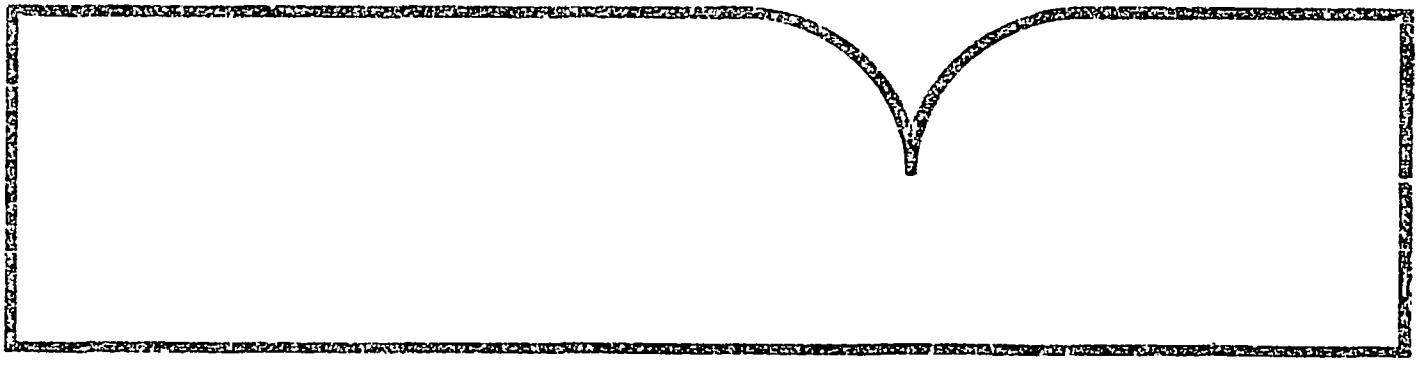

PB81-191116

DCN 81-203-001-27-07

EPA-600/7-81-030
March 1981

SELECTIVE CATALYTIC REDUCTION AND NO_x CONTROL IN JAPAN

EPA Contract 68-02-3171, Task 10

Prepared by:

Gary D. Jones
Radian Corporation
8501 Mo-Pac Blvd.
Austin, Texas 78758

EPA Project Officer:

J. David Mobley
Environmental Protection Agency
Industrial Environmental Research Laboratory
Research Triangle Park, NC 27711

TECHNICAL REPORT DATA
(Please read Instructions on the reverse before completing)

1 REPORT NO. EPA-600/7-81-030	2
3. RECIPIENT'S ACCESSION NO. PB81-191116	
4 TITLE AND SUBTITLE Selective Catalytic Reduction and NOx Control in Japan	5 REPORT DATE March 1981
	6. PERFORMING ORGANIZATION CODE
7 AUTHOR(S) Gary D. Jones	8 PERFORMING ORGANIZATION REPORT NO DCN 81-203-001-27-07
9 PERFORMING ORGANIZATION NAME AND ADDRESS Radian Corporation 8501 Mo-Pac Boulevard Austin, Texas 78759	10 PROGRAM ELEMENT NO. C9BN1B
	11 CONTRACT/GRANT NO 68-02-3171, Task 10
12 SPONSORING AGENCY NAME AND ADDRESS EPA, Office of Research and Development Industrial Environmental Research Laboratory Research Triangle Park, NC 27711	13 TYPE OF REPORT AND PERIOD COVERED Task Final: 3/80-1/81
	14. SPONSORING AGENCY CODE EPA/600/13

15 SUPPLEMENTARY NOTES IERL-RTP project officer is J. David Mobley, Mail Drop 61, 919/541-2915.

16 ABSTRACT The report documents the travels of a four-member study team in Japan during March 1980 to assess NOx flue gas treatment (FGT) technology and related areas. Overall goals of the study were to obtain new information on current issues concerning application of FGT technology and to update information previously published. A total of 28 equipment vendors, process operators, government agencies, and industry groups were contacted. Substantial recent progress was discovered with regard to commercial applications of selective catalytic reduction (SCR) technology to gas- and oil-fired boilers. There are several applications where SCR systems are operated continuously and are successfully removing 80% of the NOx from the flue gas stream. Current development and demonstration efforts are aimed at applying SCR technology to coal-fired boilers since that fraction of Japan's total electric power generation is expected to increase to 12.5% in 1995 and since most of the new coal-fired boilers will use FGT technology for NOx control. Since four SCR systems on coal-fired boilers are scheduled to start up in 1980 and 1981, the Japanese activity in the NOx control field should be of considerable interest in the U.S. for at least the next 4 years.

17. KEY WORDS AND DOCUMENT ANALYSIS

a DESCRIPTORS	b IDENTIFIERS/OPEN ENDED TERMS	c. COSATI Field/Group
Pollution Nitrogen Oxides Flue Gases Gas Scrubbing Catalysis Reduction Boilers Fossil Fuels	Pollution Control Stationary Sources Selective Catalytic Reduction	13B 13A 07B 21D 21B 07A,13H 07D 07C

18 DISTRIBUTION STATEMENT Release to Public	19 SECURITY CLASS (This Report) Unclassified	21 NO OF PAGES 269
	20 SECURITY CLASS (This page) Unclassified	22. PRICE

EPA Form 2220-1 (9-73)

DISCLAIMER

This report has been reviewed by the Industrial Environmental Research Laboratory (RTP), U.S. Environmental Protection Agency, and approved for publication. Approval does not signify that the contents necessarily reflect the views and policies of the Agency, nor does mention of trade names or commercial products constitute endorsement or recommendation for use.

CONTENTS

Section	Page
Figures	v
Tables	ix
ACKNOWLEDGEMENTS	xii
ABSTRACT	xiii
1. SUMMARY	1
2. INTRODUCTION	13
3. PROCESS AND EQUIPMENT VENDORS	17
4. INSTALLATIONS WITH NO_x CONTROL SYSTEMS	29
5. GOVERNMENTAL AGENCIES AND INDUSTRY GROUPS	39
APPENDIX A - PROCESS AND EQUIPMENT VENDORS	43
Babcock-Hitachi K.K.	45
Catalyst and Chemicals Industries Co.	53
Ebara Corporation	59
Fuji Electric Co.	71
Gadelius K.K.	81
Hitachi Zosen	87
Ishikawajima-Harima Heavy Industries	93
JGC Corporation	105
Japan Shell Technology	113
Kawasaki Heavy Industries	119
Mitsubishi Heavy Industries	127
NGK Insulators	135

CONTENTS (continued)

Section	Page
APPENDIX B - INSTALLATIONS WITH NO_x CONTROL SYSTEMS	147
Chubu Electric	149
Chugoku Electric	159
Electric Power Development Company	177
Fuji Oil	195
Hokkaido Electric	201
Toa Nenryo Kogyo K.K	207
Tokyo Electric	211
APPENDIX C - GOVERNMENTAL AGENCIES AND INDUSTRY GROUPS	219
Central Research Institute of the Electric Power Industry	221
Japan Environment Agency	229
Aichi Environmental Research Center	235
Kanagawa Prefectural Government	241
Yokohama City Pollution Control Bureau	247
APPENDIX D - JAPANESE SCR PROCESS VENDOR CONTACTS AND US AFFILIATES	253

FIGURES

Number		Page
1	Comparison of conventional and modified air preheater designs	25
2	Typical construction of catalyst beds in reactor vessel (IHI)	32
3	Kanagawa prefectural government section air pollution monitoring center	42
4	Assembling and loading procedure of catalyst	50
5	Honeycomb catalysts manufactured by Catalyst and Chemicals	57
6	Flow sheet for EBARA electron beam process	62
7	Diagram of reaction mechanism for EBARA process	63
8	Arrangement of electron accelerator and reactor	64
9	Removal of SO_x and NO_x vs. gas rotation ratio	66
10	Continuous operating data for EBARA pilot unit	67
11	NO_x and SO_x removal levels achievable by the EBARA electron beam process	68
12	Schematic of Fuji Electric NH_3 Analyzer	74
13	Influence of probe material on NH_3 concentration observed	75
14	Sample flow diagram of Fuji Electric NH_3 Analyzer	77
15	NDIR differential analyzer for NH_3 measurement	78
16	Comparison of conventional and modified air preheater designs	84
17	Operation of air preheater modified for use with low dust load	84

FIGURES (continued)

Number		Page
18	Test results of Hitachi Zosen Pilot Unit at Albany, Georgia...	90
19	Example of IHI steel catalyst holder.....	95
20	Fixed bed type reactor for coal-fired applications (vertical downflow).....	99
21	Fixed bed type reactor for oil-fired applications (horizontal gas flow).....	100
22	Split economizer arrangement for temperature control on IHI boiler.....	102
23	Construction schedule for Kudamatsu No. 2 de-NOx Plant (Retrofit).....	103
24	Construction schedule of Kudamatsu No. 3 de-NOx Plant (New Boiler).....	104
25	Activity comparison of high and low temperature catalysts by JGC.....	108
26	Activity of low temperature catalyst (JP 501) as a function of temperature.....	109
27	Arrangement of gas channels and catalyst in parallel passage reactor.....	110
28	KHI catalyst types.....	121
29	Arrangement of catalyst cases in reactor.....	123
30	NOx removal efficiency and effluent NH_3 vs. NH_3/NO_x mol ratio.....	124
31	Status of orders received for MHI NOx removal plants.....	130
32	Flue gas treatment alternatives for coal-fired boilers.....	131
33	Characteristics of honeycomb substrate (coated type).....	138
34	NGK hexagonal honeycomb catalyst substrate (200 mm square x 350 mm, 7 mm hydraulic diameter, 0.8 mm wall thickness).....	139
35	NGK square honeycomb catalyst substrate (150 mm square x 350 mm).....	140

FIGURES (continued)

Number		Page
36	Conversion of SO_2 to SO_3 by catalyst as a function of gas temperature	142
37	Effect of space velocity on NOx reduction efficiency (Small scale tests)	144
38	Effect of gas temperature on NOx reduction efficiency (Small scale tests)	145
39	Effect of NH_3/NO_x ratio on NOx reduction efficiency and NH_3 carryover	146
40	Catalyst and reactor arrangement on #4 boiler, Chita Power Station	155
41	Truck delivery and unloading of ammonia	156
42	Hoist arrangement for catalyst changing	156
43	Layout of SCR reactor on #5 boiler, Chita Power Station	156
44	SCR reactors at Chugoku Electric, Kudamatsu Power Station	162
45	NH_3 Storage and Vaporization System at Chugoku Electric's Kudamatsu Power Station	163
46	SCR reactor at Shimonoseki Power Station	167
47	Reactor, air preheater and ESP at Shimonoseki Power Station	168
48	Plot view of No. 1 boiler, de-NO_x system, ESP and FGD system at Shimonoseki Power Station	169
49	Design of gas mixing zone	171
50	Isometric flow diagram of boiler and SCR reactor at Shimonoseki Power Station	172
51	SCR reactor and catalyst basket at Shimonoseki Power Station (dimensions in millimeters)	173
52	Flow diagram of IHI pilot facility at EPDC's Isogo Power Station	182
53	Flowsheet of Hitachi-Zosen Pilot Plant at Isogo Power Station	184

FIGURES (continued)

Number		Page
54	Structure of Hitachi Zosen Noxnon 500 and 600 catalyst.....	185
55	Equipment modifications made at EPDC Takehara Power Station for SCR system installation.....	186
56	SCR system (under construction) at EPDC Takehara Power Station.....	187
57	Comparison of conventional and modified air preheater designs.....	189
58	MHI SCR system applied to industrial boiler at Fuji Oil Refinery.....	198
59	JGC SCR system applied to CO boiler at Fuji Oil Refinery.....	200
60	Plot view of Hokkaido Electric Coal-Fired Power Station.....	204
61	Layout of pilot scale flue gas treatment system at Joban Power Company's Nakoso Station.....	214
62	Schematic of DIGA technique for continuous in-duct gas analysis.....	226
63	Growth of SCR facilities in Japan.....	234
64	NOx reduction in Aichi prefecture for the period 1974-1978....	239
65	Air pollution monitoring center and information flow diagram.....	245
66	Yokohama City pollution monitoring center.....	250

TABLES

Number		Page
1	Organizations Contacted by the Study Team	7
2	Calculated Costs of SCR for a New 700 MW Boiler (70 percent Utilization or 4,292,000 MW hr/year, Early 1980 Costs)	8
3	Summary of NO_x SCR Installations Inspected (Existing and Planned)	10
4	Subject Areas and Issues Discussed with Japanese Companies	14
5	Vendors Contacted and Their Products	18
6	Comparison of Homogeneous and Coated Catalyst Elements	21
7	Comparison of Coated Catalyst Substrate Material	21
8	Coal-Fired Applications of SCR in Japan	30
9	Investment Costs of Full-Scale SCR Systems Inspected	35
10	Emission Standards for NO_x in Japan as of August 2, 1979 (Source: Japan Environmental Summary, Sept., 1979)	40
11	SCR Installations by Babcock-Hitachi as of March 1980	48
12	Data from Babcock-Hitachi Pilot Plant at EPDC Takehara Power Station	49
13	Catalyst Requirements as a Function of NO_x Removal	52
14	Performance of EBARA Process with High SO_x/NO_x Concentrations Using a Simulated Coal-Fired Flue Gas	69
15	Performance Specifications of Fuji Electric NH_3 Analyzer	76
16	SCR System Applications by IHI (as of mid-1979)	96
17	Design Data for KHI Catalyst Types	121
18	Effect of Catalyst Formulation on NO_x Removal (380°C, 90% NO_x Removal)	122

TABLES (continued)

Number		Page
19	SCR Systems Supplied by KHI	126
20	Design Data for MHI SCR System at Shimonoseki Power Station	133
21	Properties of NGK Honeycomb Substrate	141
22	NOx Control at Chita Power Station - Chubu Electric	152
23	Emission Limitations at Chita Power Station	153
24	Design Data on MHI SCR System, #4 Boiler, Chita Power Station	154
25	Data Summary on Babcock-Hitachi SCR System - #5 and #6 Boiler, Chita Power Station	157
26	Capital Cost Breakdown of SCR System on No. 3 Boiler (700 MW) Chugoku Electric, Kudamatsu Power Station	165
27	Operating Cost Breakdown of SCR System on No. 3 Boiler (700 MW) Chugoku Electric, Kudamatsu Power Station	165
28	Design Data for the MHI SCR System Installed at the Shimonoseki Power Station	166
29	Cost Breakdown of Selected Modifications at Shimonoseki Power Station	175
30	Comparison of Existing and New Fans at Takehara Power Station	190
31	Operating Data from Sumitomo Activated Carbon Process at the EPDC Takehara Power Station	191
32	Conversion of SO_2 to SO_3 SCR Catalyst	192
33	NOx Control on Industrial Boilers at Fuji Oil Sodegaura Refinery	197
34	Coal-Fired Boilers Planned by Companies Participating in Pilot Unit Test at Nakoso Power Station	218
35	Targets for Coal Utilization for Electric Power Generation in Japan (Operating Units)	223

TABLES (continued)

Number		Page
36	Japan Environment Agency Standards for Boiler NO_x Emissions...	224
37	Measurement Methods for NO_x.....	225
38	Range of Ambient NO_x Concentrations in Japan.....	231
39	Emission Standards for NO_x in Japan as of August 2, 1979.....	233
40	NO_x Control Techniques in Aichi Prefecture.....	238
41	Pollutant Measurement Techniques of Ambient Monitors in Kanagawa Prefecture.....	244
42	Capital and Operating Costs for Kanagawa Prefecture Air Pollution Monitoring Systems.....	246
43	Major Emission Sources in Yokohama City.....	249
44	Emission Reduction Requested by Yokohama City to Meet 1985 Target.....	251

ACKNOWLEDGEMENTS

The author wishes to acknowledge to the contributions of Jumpei Ando of Chuo University, David Mobley of EPA-IERL, and Doug Maxwell of TVA in the planning and execution of this project. The report was reviewed by these colleagues as well as all of the organizations contacted and represents the combined efforts of all parties.

ABSTRACT

A four member study team traveled in Japan during March 1980 to assess NO_x flue gas treatment technology and related areas. The overall goal of the study was to obtain new information on current issues concerning application of this technology and update information previously published. A total of 28 equipment vendors, process operators, governmental agencies, and industry groups were contacted. It was found that there has been substantial progress recently with regard to commercial applications of selective catalytic reduction (SCR) technology to gas- and oil-fired boilers. There are several applications where SCR systems are operated continuously and are successfully removing 80% of NO_x from the flue gas stream. Current developments and demonstration efforts are aimed at applying SCR technology to coal-fired boilers since that fraction of Japan's total electric power generation is expected to increase to 12.5 percent in 1995 and since most of the new, coal-fired boilers will use flue gas treatment technology for NO_x control. Four SCR systems on coal-fired boilers are scheduled to start up in 1980-81. Thus the Japanese activity in the NO_x control field should provide valuable information to interested parties in the U.S. in the next four years.

SECTION 1

SUMMARY

A four member study team consisting of J. David Mobley of EPA/IERL-RTP, Gary D. Jones of Radian Corporation, J. Douglas Maxwell of TVA, and Dr. Jumpei Ando of Chuo University traveled in Japan during March 1980 to assess NO_x flue gas treatment technology and related areas. The overall goal of the study was to obtain new information on current issues concerning application of this technology and update information previously published. Equipment vendors, process operators, governmental agencies, and industry groups were contacted as shown in Table 1.

There has been substantial progress recently with regard to commercial applications of selective catalytic reduction (SCR) technology to gas- and oil-fired boilers. Several of these sites were visited where the SCR units are reliably operating and achieving the design removals. The operators report that the catalyst life is exceeding the vendors guarantee. Current development efforts are aimed at applying SCR technology to coal since the coal-fired fraction of Japan's total electric power generation is expected to increase from 3.7 percent in 1978 to 12.5 percent in 1995. It is anticipated that all or most of the new, coal-fired boilers will use flue gas treatment technology for NO_x control in addition to low NO_x burners.

A major area of research and development involves minimizing the impacts of SCR systems on downstream equipment such as air preheaters, particulate collection devices and SO_2 removal equipment. Problems with the air preheater occur when ammonium bisulfate (NH_4HSO_4) deposits plug and corrode the elements. NH_4HSO_4 is the product of a condensation reaction between NH_3, SO_3 and H_2O, which can occur when the flue gas temperature drops below about 210°C. Japanese pilot unit tests have shown that the plugging problem is most severe in units

TABLE 1. ORGANIZATIONS CONTACTED BY THE STUDY TEAM

Equipment Vendors	Installations with de-NOx Systems	Governmental Agencies and Industry Groups
Babcock-Hitachi	Chubu Electric Power Company Chita Station	Central Research Institute of Electric Power Industry
Catalyst and Chemicals Industries Company	Chugoku Electric Power Company Kudamatsu Power Station Shimonoseki Power Station	Federation of Electric Power Companies
EBARA Corporation	Electric Power Development Company Tokyo Headquarters Isogo Power Station Takehara Power Station	Japanese Environment Agency
Fuji Electric Company	Fuji Oil Company	Japanese Ministry of International Trade & Industry
Gadelius K. K.	Hokkaido Electric Power Company	Aichi Prefecture
Hitachi Zosen	Toa Nenryo Kogyo Company	Kanagawa Prefecture
Ishikawajima-Harima Heavy Industries	Tokyo Electric Power Company	U.S. Embassy
JGC Corporation		Yokohama City
Japan Shell Technology		
Kawasaki Heavy Industries		
Kimoto Electric		
Mitsubishi Heavy Industries Hiroshima Research Station Tokyo Headquarters		
NGK Insulators		

which fire coal or high sulfur oil and also remove particulates upstream of the NO_x reactor. When particulates are removed downstream, plugging problems are significantly reduced. It is felt that the particulates produce a sand-blasting effect that cleans the air preheater elements and also that some of the NH_4HSO_4 condenses on the fly ash particles rather than the elements. Plugging problems are reduced or eliminated by installing soot blowers on both sides of the air preheater and increasing both the frequency and pressure of the soot blowing operation. In some cases, special air preheater designs will be used in which the intermediate and low temperature zones are manufactured as a single element. These have been tested on pilot unit equipment. A full scale installation is scheduled at EPDC's Takehara Power Station.

NH_3 from an SCR reactor apparently does not impair FGD system performance although, in some cases, the wastewater must be treated to remove nitrogen compounds. It is not known if SCR systems will affect dry SO_2 removal systems (e.g., spray drying) since these techniques are not used in Japan. The one apparent adverse impact that may occur is NH_4HSO_4 affecting the performance of the downstream baghouse. The effect of an SCR system on baghouses is under investigation. Pilot unit tests are underway; however, data are not yet available.

Several of the coal-fired SCR applications that are under construction utilize hot-side ESP's for upstream particulate removal and there are a variety of reasons for selecting hot-side particulate removal. These include 1) to eliminate fly ash from entering the NO_x system and potentially causing plugging or erosion problems; 2) to obtain the capability to remove particulates from a wide range of coals with varying characteristics, and 3) to avoid ammonia compounds in the ash that can result when a cold-side ESP is used and affect fly ash utilization as a by-product and its suitability as a landfill material. However, cold-side ESP also have unique advantages such as 1) lower capital and operating costs; and 2) allowing the fly ash to reduce or eliminate NH_4HSO_4 deposits on air preheaters.

With SCR, the flue gas temperature entering the reactor is usually maintained between about 300 to 400°C. Continuous exposure to higher temperatures can cause sintering of the catalyst material and consequent loss of activity. Operating at less than 300°C can allow NH_4HSO_4 to deposit in the catalyst pores, thereby blinding the catalyst. Exposure of the catalyst to flue gas at less than 100°C can allow water deposition and permanent damage. In Japan, the temperature is controlled by either load regulation or bypassing a percentage of the hot flue gas around the economizer and mixing it with the cooler gas. Another technique that may be applied involves installing a split economizer and controlling the flow rate through each side to maintain the desired temperature.

Research and development on catalyst formulations and shapes during recent years has resulted in some standardization among the catalyst types offered. A catalyst formula consisting primarily of oxides of titanium and vadanium appears to be universally used. Current research involves adjusting the mix of these components and adding small amounts of other compounds in order to meet the specific requirements of each application. The most important area is that of SO_2 oxidation to SO_3. SO_3 is undesirable since it can enhance NH_4HSO_4 formation and increase particulate emissions. SO_2 oxidation can be a problem with coal-fired boilers where SO_2 concentrations are relatively high. Small amounts of proprietary additives can be included in the catalyst formulation or the vanadium content can be reduced in order to control the amount of SO_2 oxidation that occurs.

There has been concern that the catalyst and reactor may plug with ash when applied to coal-fired boilers. Pilot unit tests have indicated that plugging is not a problem when honeycomb or pipe shape catalyst is used in a vertical, downflow arrangement. However, soot blowers will be installed in the reactors of current full scale applications as a conservative design measure. Another concern in the US has been catalyst poisoning by flue gas components. While it is true that certain alkali metals, such as sodium and potassium, will slowly poison the catalyst, the concentrations are low

enough that catalyst activity will not be affected during the guarantee period.

While a pellet shaped catalyst is preferred for gas-fired applications, the "honeycomb" shape is used for oil- and coal-fired applications. Honeycomb is a general term for a rectangular parallelepiped element with parallel channels passing through it in the direction of the gas flow. The catalyst elements can be supplied in three forms: composed solely of catalyst material (homogeneous) or composed of either a ceramic or metallic substrate that is coated with catalyst material. There is no agreement on which type is best and each offers unique advantages. For example, the homogeneous element will not lose activity even if the outer layer is lost due to erosion by flyash; however, eventually the physical strength can be affected. The opposite is true with the coated variety. Coated catalyst elements also have the potential for erosion; the element will not be structurally weakened, but catalytic activity can be lost. The substrate used for the coated catalyst elements is either a metallic or ceramic material. The metallic material is resistant to breakage and causes less of a pressure drop than a ceramic substrate. Alternatively, the ceramic material has better catalyst bonding properties, is acid resistant and is lightweight. Catalyst life guarantees are usually one year for coal, one to two years for oil, and two to three years for gas although the experience on gas- and oil-fired boilers has been that actual catalyst life exceeds the guarantee.

The labor requirements of the operating, full-scale systems are small. No additional operating personnel are required and maintenance labor consists primarily of NH_3 and catalyst loading and cleaning the air preheater during the annual outage. Since there have been no catalyst changes to date, the labor estimates for this work vary widely. Operators indicate that the SCR processes themselves are very reliable, essentially 100%. However, in some cases, a boiler shutdown has been necessary where air preheater plugging has occurred. In most cases, steps have been undertaken to reduce the plugging rate to the extent that cleaning is only required during normal boiler outages.

The automatic control systems are similar for all of the processes. NH_3 injection is controlled by a signal consisting of the product of boiler load (related to gas flow rate) and the reactor inlet NO_x concentration. For gas and oil applications the outlet NH_3 concentration is also used as a trim signal for NH_3 injection. An NH_3 emissions monitor for coal-fired flue gas has not been perfected although several techniques are under development. Usually the NH_3 monitor is a chemiluminescent NO monitor with a catalytic converter which converts NH_3 to NO. Sulfur oxides apparently interfere with the monitoring equipment and there have been problems with the converters giving incomplete NH_3 conversions.

NO_x emissions from boilers utilizing catalytic de-NO_x are generally reduced by 80 percent. Higher reductions are possible, but costs will be greater for these units. NH_3 emissions for oil- and gas-fired applications are reported to be about 3 to 10 ppm. Emissions from full-scale, coal-fired facilities will not be known until after the start-up of several units currently under construction. In addition to NH_3 emissions, there is some concern that other compounds - such as cyanides, nitrosoamines and nitrates - may also be emitted. SCR system vendors and operators, however, were not aware of any instances where compounds such as these were emitted. The possibility of a visible ammonium sulfite plume resulting from NH_3 emissions entering a downstream, wet FGD system may be a problem if the slip NH_3 is high (>50 ppm). Plumes of ammonium sulfite are known to occur during certain atmospheric conditions when NH_3 based FGD systems are used. However, the Japanese have experience with situations in which 10 ppm of NH_3 enters the scrubber and, based on this experience, do not feel that SCR systems will cause visible plume formation.

Other potential environmental impacts include nitrogen compounds in the wastewater and catalyst disposal. NH_3 can enter the wastewater through the FGD system or from air preheater washwater. In locations where discharge of this water will cause problems, an activated sludge technique can be used

to treat the wastewater. In other locations it may be possible to blend wastewater containing NH_3 with other water discharges. The catalyst disposal issue has not been fully addressed. While the process vendors indicate that they will dispose of spent catalyst, the specific method of disposal has not been identified. This is partially due to the fact that, so far, none of the full scale systems has required a catalyst change.

The costs of SCR systems are dependent upon many factors. In general, the capital costs for 80 percent NO_x control on a low-sulfur-oil-fired boiler in Japan will range from 3000 to 4000 yen/kW ($12 to 16/kW). Complicated retrofits will cost more. The costs for coal-fired boilers are estimated to range from 6000 to 7000 yen/kW ($24 to 28/kW) when installed on a new boiler. To increase NO_x removal from 80 to 90 percent will raise the cost of a system 20 to 25 percent. 90 percent control with low NH_3 emissions will increase the cost by 40 to 50 percent. Catalyst costs often amount to half of the total capital cost of the system. The cost of catalyst does not change much from vendor to vendor and a typical value is about $340 per cubic foot (based on 250 yen per dollar). Estimated annualized costs of SCR systems prepared by Dr. Jumpei Ando, are shown in Table 2. Ten cases are considered in order to determine annualized costs as a function of fuel and removal level.

Several SCR installations were inspected by the study team. Data from these units are summarized in Table 3. As the table indicates, most of the installations are applied to utility boilers and operate at 80% NO_x removal. Gas- and oil-fired applications are already operative and several coal-fired applications are scheduled for startup in the near future. In addition to these facilities, two applications of the Thermal de-NO_x process were inspected. This process involves injecting the ammonia into the high temperature zone and achieves selective NO_x reduction without the use of a catalyst. One application was to a utility boiler at Chuba Electric's Chita Power Station.

TABLE 2. CALCULATED COSTS FOR SCR FOR A NEW 700 MW BOILER

	Case	1	2	3	4	5
Boiler Basis	Fuel	Gas	Gas	Low S Oil	Low S Oil	High S Oil
	Flue Gas Flow rate, 1000 Nm^3/hr	2000	2000	2000	2000	2000
	NO_x Concentration, ppm	60	60	120	120	180
	SO_x Concentration, ppm	1	1	100	100	1500
	Particulate Concentration, gram/Nm^3	0.005-0.01	0.005-0.01	0.02-0.04	0.02-0.04	0.05-0.20
Design Data	NH_3 Removal percent	80	90	80	90[d]	80
	Catalyst Type	Pellet	Pellet	Honeycomb	Honeycomb	Honeycomb
	Catalyst Size, mm	5.0	5.0	6.7 and 3.3[c]	6.7 and 3.3[c]	7.5 and 3.5[c]
	NH_3 Emissions, ppm	5-10	5-10	5-10	5-10	<5
	Space Velocity, 1000 hr^{-1}	19.0	13.5	5.1	3.4	2.8
	Catalyst Volume, m^3	105	148	392	588	714
	NH_3/NO_x Mole Ratio	0.95	1.05	0.85	0.96	0.84
	Catalyst Life, years	3	3	2	2	2
	Reactor Pressure Drop, mm H_2O[b]	120	140	100	120	125
	Power Consumption, percent of boiler input[b]	0.18	0.21	0.15	0.18	0.19
Investment Costs	Catalyst, 10^6 yen[e] (10^6 dollars)[m]	0.29 (1.14)	0.41 (1.64)	1.22 (4.88)	1.82 (7.28)	2.21 (8.84)
	Other, 10^6 yen[f] (10^6 dollars)[m]	1.10 (4.40)	1.20 (4.80)	1.50 (6.00)	1.75 (7.00)	1.80 (7.20)
	Total, 10^6 yen[f] (10^6 dollars)[m]	1.39 (5.56)	1.61 (6.44)	2.72 (10.88)	3.57 (14.28)	4.01 (16.04)
	Total, 1000 yen/kw[f] (dollars/kw)	1.99 (7.96)	2.30 (9.20)	3.89 (15.56)	5.10 (20.40)	5.73 (22.92)
Annual Cost	Fixed Costs, 10^6 yen[i] (10^6 dollars)	0.30 (1.20)	0.34 (1.36)	0.50 (2.00)	0.82 (3.48)	0.67 (2.68)
	Catalyst 10^6 yen[j] (10^6 dollars)	0.10 (0.40)	0.14 (0.56)	0.41 (2.44)	0.91 (3.64)	1.11 (4.44)
	Ammonia, 10^6 yen[k] (10^6 dollars)	0.05 (0.20)	0.06 (0.24)	0.10 (0.40)	0.11 (0.44)	0.14 (0.56)
	Other, 10^6 yen[l] (10^6 dollars)	0.20 (0.80)	0.24 (0.96)	0.12 (0.48)	0.20 (0.80)	0.21 (0.84)
	Total, 10^6 yen (10^6 dollars)	0.65 (2.60)	0.78 (3.12)	1.38 (5.52)	1.84 (7.36)	2.13 (8.52)
	Annualized Cost, yen/kwh (mills/kwh)	0.15 (0.60)	0.18 (0.72)	0.32 (1.28)	0.43 (1.72)	0.50 (2.00)
Cost Effectiveness	1000 yen/Nm^3 of NO_x removed (dollars/lb NO_x removed)[n]	1.10 (0.97)	1.16 (1.04)	1.14 (1.02)	1.99 (1.79)	1.20 (1.06)

TABLE 2 (continued)

	Case	6	7	8	9	10
Boiler Basis	Fuel	High S Oil	Low S Coal[a]	Low S Coal[a]	High S Coal[b]	High S Coal[b]
	Flue Gas flow rate, 1000 Nm³/hr	2000	2100	2100	2100	2100
	NO_x Concentration, ppm	180	300	300	300	300
	SO_x Concentration, ppm	1500	900	900	2000	2000
	Particulate Concentration, gram/Nm³	0.05-0.20	0.05-0.20	0.05-0.20	15-25	15-25
Design Data	NO_x Removal, percent	90[d]	80	90[d]	80	90[d]
	Catalyst Type	Honeycomb	Honeycomb	Honeycomb	Honeycomb	Honeycomb
	Catalyst Size, mm	7.5 and 1.5[c]	7.5 and 1.5[c]	7.5 and 1.5[c]	6.1 and 1.7[c]	6.1 and 1.7[c]
	NH_3 Ammonia, ppm	<5	<5	<5	5-10	5-10
	Space Velocity, 1000 hr^{-1}	1.8	2.7	1.7	2.7	1.7
	Catalyst Volume, m^3	1111	852	1353	852	1353
	NH_3:NO_x Mole Ratio	0.94	0.83	0.93	0.84	0.94
	Catalyst Life, years	2	3	3	3	3
	Reactor Pressure Drop, mm H_2O[d]	150	140	170	140	170
	Power Consumption, percent of boiler input[b]	0.24	0.24	0.29	0.24	0.29
Investment Costs	Catalyst, 10^9 yen[e] (10^6 dollars)[m]	3.44 (13.76)	2.81 (11.24)	4.46 (17.84)	2.81 (11.24)	4.46 (17.84)
	Other, 10^9 yen[f] (10^6 dollars)[m]	2.10 (8.40)	2.00 (8.00)	2.30 (9.20)	2.00 (8.00)	2.30 (9.20)
	Total, 10^9 yen[f] (10^6 dollars)[m]	5.54 (22.16)	4.81 (19.24)	6.76 (27.04)	4.81 (19.24)	6.76 (27.04)
	Total, 1000 yen/kw[f] (dollars/kw)	7.91 (31.64)	6.87 (27.48)	9.66 (38.64)	6.87 (27.48)	9.66 (38.64)
Annual Cost	Fixed Costs, 10^9 yen[g] (10^6 dollars)	0.87 (3.48)	0.78 (3.12)	1.02 (4.08)	0.78 (3.12)	1.02 (4.08)
	Catalyst, 10^9 yen[j] (10^6 dollars)	1.72 (6.88)	2.81 (11.24)	4.46 (17.84)	2.81 (11.24)[n]	4.46 (17.84)
	Ammonia, 10^9 yen[k] (10^6 dollars)	0.16 (0.64)	0.27 (1.08)	0.30 (1.20)	0.27 (1.08)	0.30 (1.20)
	Other, 10^9 yen[l] (10^6 dollars)	0.26 (1.04)	0.20 (0.80)	0.24 (0.96)	0.20 (0.80)	0.24 (0.96)
	Total, 10^9 yen (10^6 dollars)	3.01 (12.04)	4.06 (16.24)	6.02 (24.08)	4.06 (16.24)	6.02 (24.08)
	Annualized Cost, yen/kwh (mills/kwh)	0.70 (2.80)	0.95 (3.80)	1.40 (5.60)	0.95 (3.80)	1.40 (5.60)
Cost Effectiveness	1000 yen/Nm³ of NO_x removed dollars/lb NO_x removed)[o]	1.51 (1.34)	1.20 (1.06)	1.58 (1.40)	1.20 (1.06)	1.58 (1.40)

[a] Treating flue gas passing through a hot ESP
[b] Treating flue gas with full fly ash load
[c] Ceramic honeycomb, square type (channel diameter + wall thickness)
[d] Actually, 90% removal is difficult without increasing emission when treating a large gas volume from oil and coal since the NO_x concentration and gas velocity are not uniform at reactor inlet
[e] Catalyst cost (million yen/m^3) = 2.8 for gas, 3.1 for oil, and 3.3 for coal
[f] Including civil engineering and test operation
[g] By reactor and connecting ducts
[h] Percent of power generated by the boiler Mainly for compensation of pressure drop
[i] Interest (10%) for initial charge of catalyst and 25% (including 7 years depreciation) of investment cost excluding catalyst.
[j] Catalyst cost divided by life (year)
[k] At 100 000 yen/ton
[l] Mainly for power (20 yen/kw hr for gas and oil, 15 yen/kw hr for coal)
[m] Based on 0.250/$
[n] 1/3 of NO_x as NO_2
Basis: Early 1980 Costs; 6,292 000 MW hr/yr; 70% utilization

TABLE 3. SUMMARY OF NO_x SCR INSTALLATIONS INSPECTED (EXISTING AND PLANNED)

Company	Station	Boiler Identification	Boiler Fuel	Boiler Size (MW)	Catalytic DeNO Syst Size (MW)	NO_x Removal (%)	Outlet NO_x (ppm)	Vendor	Cost (¥/kW)	New/Retrofit	Startup
Chubu Electri	Chita	#5	LNG	700	700	80	8-10	B-H	1800	New	March 1978
		#6	LNG	700	700	80	8-10	B-H	1800	New	April 1978
		#4	Oil	700	700	80	20	IHI	3600	Retrofit	March 1980
Chugoku Electric	Kudamatsu	#2	Oil	375	375	30	32	IHI	3900	Retrofit	April 1979
		#1	Oil	700	700	80	26	IHI	3200	New	September 1979
	Shimonoseki	#1	Coal	175	175	50	250	MHI	7000	Retrofit	April 1980
Fuji Oil	Sodegira	#7	Oil	50	50	87	45	MHI	-	New	January 1979
		--	CO & Oil	10	10	92	15	ICC	--	Retrofit	July 1976
Hokkaido Electric	Tomakomai	#1	Coal	350	30	>80	<40	B-H	>10 000	New	October 1980
EPDC	Takehira	#1	Coal	250	125	80	80	B-H	> 7000	Retrofit	June 1981
		#1	Coal	50	125	80	<40	IHI	> 7000	Retrofit	June 1981

This system is operated continuously and achieves 30% NO_x removal. The other application is to a pipe still heater at the Toa Nenryo Kawasaki Refinery. This unit is operated only when there is a local smog alert (about 20% of the time) and achieves a NO_x reduction of 30 to 50%.

The catalytic de-NOx units were installed to meet local governmental NOx emission limitations and are not necessary to comply with the Japanese national standard. Compliance with local and national environmental agreements is achieved through a sincere cooperative spirit that exists between industry and government to solve the country's pollution problems. Local governments maintain a very comprehensive and extensive instrumentation system to monitor ambient pollutant concentrations and emission rates from major emitters. Although the local governments have no enforcement authority, violations are rarely, if ever, detected since the companies do not want to jeopardize the "good will" that exists between the industrial, governmental, and the public sectors.

SECTION 2

INTRODUCTION

The Environmental Protection Agency is investigating methods of controlling NO_x emissions from fossil fuel-fired utility and industrial boilers since these sources comprise a major source of NO_x emissions. Coal-fired boilers are of particular interest since they emit the highest concentrations of NO_x. Currently, NO_x emissions are reduced by the use of special "low NO_x" burners and other combustion controls. These techniques are usually capable of 30 to 50 percent reduction of NO_x. Another technique, developed primarily in Japan, treats the flue gas to achieve 80 to 90 percent NO_x removal. This technique is usually termed selective catalytic reduction (SCR) or catalytic de-NO_x since it involves injecting ammonia (NH_3) into the flue gas prior to a catalytic reactor which reduces NO_x to N_2 according to the following reactions:

$$4NO + 4NH_3 + O_2 \rightarrow 4N_2 + 6H_2O$$
$$2NO_2 + 4NH_3 + O_2 \rightarrow 3N_2 + 6H_2O$$

SCR has been applied commercially in Japan to several oil- and gas-fired boilers; coal-fired applications will soon be on-line. However, because this technology has not been applied in the US and since there are several unanswered questions regarding the application of SCR technology to coal-fired boilers, J. David Mobley of EPA's Industrial Environmental Research Laboratory, Gary D. Jones of Radian Corporation, J. Douglas Maxwell of the Tennessee Valley Authority, and Dr. Jumpei Ando of Chuo University, traveled in Japan during March, 1980 to assess the status of flue gas treatment technology for NO_x control. Of particular interest was the selective catalytic reduction technology and its impact on downstream equipment. The issues of interest for this study are shown in Table 4.

Preceding page blank

TABLE 4. SUBJECT AREAS AND ISSUES DISCUSSED WITH JAPANESE COMPANIES

Design/Operation of Process and Equipment

- Hot-side versus Cold-side ESP
- Air Preheater Soot Blowing and Water Washing
- Catalyst Erosion
- Catalyst Life
- Catalyst Poisoning
- Catalyst Composition and Configuration
- Catalyst Loading Procedure
- Reliability
- Maintenance Requirements
- Labor Requirements
- Control Systems
- Flue Gas Temperature Control
- Effects of Temperature Extremes on Catalyst
- 80 versus 90 percent NO_x Removal
- SO_2 to SO_3 Conversion
- Thermal de-NO_x Process Applications

Impacts on Other Equipment

- Economizer
- Air Preheater
- Baghouse
- Electrostatic Precipitators (ESP)
- Flue Gas Desulfurization (FGD)
- Dry SO_2 Scrubbing

Environmental Impacts

- FGD Wastewater
- Air Preheater Washwater
- Fuming at the Stack
- Emissions of NO_x, NH_3, Cyanides, Nitrosoamines, Nitrates
- Catalyst Disposal
- Fly Ash Disposal

Other

- Catalyst Cost
- System Cost
- Fly Ash Utilization
- Analytical Techniques for NO_x, NH_3 and SO_3
- Industrial/Civilian/Governmental Relationships

The applicability of SCR systems to coal-fired boilers is of particular importance in the US, since the national emphasis on coal-firing will increase ambient NOx concentrations. In areas that are noncompliance in NOx or hydrocarbons, both new and retrofit applications of SCR are being considered for utility and industrial boilers. Boiler operators have expressed a great deal of concern over the impact of ammonia emissions from SCR systems on downstream equipment. It is known that air preheaters can plug when NH_3, SO_3 and water combine to form ammonium bisulfate (NH_4HSO_4). There is also concern over the effects of NH_3 on ESP's, baghouses and FGD systems.

Another factor is the effect of removal level on cost and system design. Most SCR applications being considered in the US are anticipated to achieve 90 percent NOx removal, whereas 80 percent is typical in Japan. In order to adequately assess US applications, it is necessary to quantify these effects.

The objective of the trip was to develop information on all new issues and update existing information in areas such as status of development, costs, NH_3 emissions, catalyst and reactor design, and the regulatory framework driving the development of this technology. To accomplish this objective, representatives were contacted in three areas:

- process and equipment vendors,
- installations with NOx control systems, and
- governmental agencies and industry groups.

This report is divided into these same three categories. An overall summary is presented in Section 2. In Sections 3, 4, and 5, the results are briefly summarized for each of the three categories. These sections deal with

NO_x only, SCR processes and related areas. Detailed meeting reports for these and other process types are contained in the Appendices. Also, in Appendix D, the principle Japanese SCR process vendor contacts are listed along with the US licensee.

SECTION 3

PROCESS AND EQUIPMENT VENDORS

Process vendors were contacted to determine both the state-of-the-art technical developments regarding application of SCR to coal-fired boilers and recent improvements for oil- and gas-fired applications. Vendors in five subject areas were contacted as shown in Table 5. These include all of the major vendors of NO_x-only SCR technology as well as two alternative techniques. Also, two of the four independent manufacturers of SCR catalyst were contacted.

Instruments for the continuous measurement of NH_3 are still in the development stage. Consequently, meetings with these instrument vendors were conducted. SCR process vendors were also questioned about instrumentation. A regenerative air heater vendor was contacted to learn about state-of-the-art designs for use after SCR processes since plugging of conventional air heaters is a significant problem in some applications.

SELECTIVE CATALYTIC REDUCTION - PROCESS AND CATALYST VENDORS

This section presents the results of several meetings with SCR process vendors and catalyst manufacturers. Since NO_x-only SCR systems are the focus of this report, only these are discussed here. Individual meeting reports for all vendors contacted appear in Appendix A.

All of the major suppliers of SCR processes were contacted as were two of the four catalyst manufacturers. The two catalyst vendors not contacted, due to time constraints, are Sakai Chemical and Nihon Shokubai. Some of the SCR process vendors produce their own catalyst including Babcock-Hitachi and Hitachi-Zosen, while others buy catalyst from one or more catalyst manufactures.

TABLE 5. VENDORS CONTACTED AND THEIR PRODUCTS

Product	Vendors Contacted
Selective Catalytic Reduction NO_x Control Equipment (NO_x only)	Babcock-Hitachi
	Hitachi Zosen
	Ishikawajima-Harima Heavy Industries
	JGC Corporation
	Kawasaki Heavy Industries
	Mitsubishi Heavy Industries
Alternative NO_x Control Techniques	EBARA Corporation (Electron Beam, SO_x/NO_x)
	Japan Shell Technology (SO_x/NO_x)
Catalyst Vendors	Catalyst and Chemicals Industries Co.
	NGK Insulators
Instrument Vendors	Fuji Electric Co.
	Kimoto Electronics
Air Heaters	Gadelius K. K.

None of the catalyst manufacturers are associated solely with one process vendor.

Catalyst

All of the vendors use a catalyst to facilitate the reaction between injected NH_3 and NOx. Both the catalyst manufacturers and process vendors conduct their own research and development programs. However, when the catalyst is sold it is prepared according to the specifications of the process vendor.

The catalyst formulations are based on TiO_2 and V_2O_5 as the major components. The V_2O_5 has the capability of also catalyzing the oxidation of SO_2 to SO_3 and is used extensively in the sulfuric acid industry. With a V_2O_5 rich catalyst, the conversion can be as high as 5 percent which at high SO_2 concentrations results in a significant amount of SO_3 exiting the SCR reactor. High SO_3 concentrations can cause problems due to NH_4HSO_4 pluggage of air preheaters downstream of the reactor. For applications where SO_2 is present, the catalyst formulation is modified to include small quantities of other proprietary compounds that suppress the SO_2 oxidation reaction. This suppression is accomplished at the expense of NOx removal; for example, reducing SO_2 oxidation from 2.5 to 0.5 percent will reduce the NOx removal efficiency by 20 percent for the same volume of catalyst.

The honeycomb, plate, and pipe shapes are preferred for use with oil- and coal-fired applications, while for gas-fired applications the pellet shape is preferred over these more complex arrangements. Most of the research emphasis is on the oil- and coal-fired applications since these applications are more difficult to deal with. The most popular shape among the catalyst vendors seems to be the honeycomb for reasons of strength and ease of handling. The honeycomb shape consists of a square block with parallel channels passing through it. The block is typically 150 to 500 mm on a side and up to 1000 mm in length. The channels can be either square, hexagonal or triangular in

shape. The honeycomb elements can be produced as a ceramic or metal substrate coated with catalyst material or as a homogeneous form composed purely of catalyst material. The honeycomb shape is easier to assemble into modules since considerably fewer pieces have to be assembled and they can be easily stacked within the module.

There is no agreement as to which catalyst type, homogeneous or coated, is best since each offers distinct advantages, as shown in Tables 6 and 7. The homogeneous catalyst is softer and can be eroded by fly ash; however, the newly exposed material is still catalytically active. Continued erosion will eventually structurally weaken the catalyst element. To overcome erosion degradation, the first few centimeters of the inlet face can be impregnated with a hardening material. Coated catalyst elements also have the potential for erosion. The element will not be structurally weakened, but catalytic activity can be lost. Ceramic is claimed to be superior to metal as a substrate material since the surface is rougher and the thermal expansion is similar to that of the catalyst. These two properties give a better bond between the catalyst and substrate which minimizes exfoliation and erosion of the catalyst. However, the metallic substrate has the advantage of thinner walls which allow a smaller volume of catalyst to be used.

Since erosion is experienced only at the inlet face, one method of prevention is to install a "dummy" layer at the reactor inlet. This layer consists of hard, inert material in the shape of catalyst elements and absorbs the erosive force of the fly ash. This technique should work with both homogeneous and coated catalyst elements.

For coal-fired applications, there is no definite agreement as to which type of catalyst, coated or homogeneous, is best. Of the systems currently under construction on coal-fired boilers, two are using a homogeneous catalyst and two are using a coated catalyst.

The catalyst manufacturer will guarantee the catalyst performance to the process vendor who in turn, guarantees the process performance to the customer. The actual guarantee period depends on the characteristics of each

TABLE 6. COMPARISON OF HOMOGENEOUS AND COATED CATALYST ELEMENTS

Coated	Homogeneous
Lower cost (less catalyst material used)	Less affected (at least initially) by erosion
Lighter weight	
Greater physical strength	

TABLE 7. COMPARISON OF COATED CATALYST SUBSTRATE MATERIAL

Metallic	Ceramic
Resistant to breakage	Lower potential for exfoliation
Lower pressure drop due to greater open frontal area	Acid Resistant
	Lightweight

application; however, the guarantees generally seem to be two tc three years for gas-fired application, one to two years for oil- and one year for coal-fired units. It appears that the guarantee perioc can be affected by NO_x removal level, particulate loadings, sulfur concentration, gas velocity, and temperature range.

It is generally assumed that the catalyst manufacturer will dispose of spent catalyst and the cost for this is apparently included in the cost of the replacement catalyst. This issue is still somewhat unclear. A definite disposal method has not yet been established primarily because none of the commercial SCR units has required a catalyst change. The manufacturer may insist on this method in order to protect the confidentialty of the formulation; however, transporting spent catalyst from the US to Japan for disposal may be prohibitively expensive. The vendors indicated that the valuable components may be recovered for reuse, but not as catalyst material. Some of the metals used may present waste disposal problems due to Japanese disposal regulations. They may also be disposal problems in the US due to regulatory constraints depending on the catalyst composition. Since the complete composition of the catalyst is proprietary, it is impossible to determine if, in the US, the spent catalyst can be landfilled or must be treated.

With coated catalysts, it may be possible for the substrate to be cleaned and reused. Since the volume of catalyst material is much less than with homogeneous elements, disposal costs may be less. The catalyst costs vary somewhat depending on the type, but in general the cost is about ¥ 3 x $10^6/m^3$ ($340/$ft^3$) for oil-fired applications.

Reactor Design

In general, there are two types of reactors that are used for oil- and coal-fired applications, horizontal flow and vertical flow. While either is applicable to oil-fired units, the vertical downflow reactor is preferred for coal-fired applications. The catalyst in most cases is assembled into

modules which are steel containers containing several catalyst elements. The modules are of a size and weight that can be conveniently handled and loaded into the reactor. The modules are loaded either from above using a hoist, or from the side using a special dolly that rolls on rails or structural steel within the reactor. The modules are supported within the reactor by structural beams at each level of catalyst. Usually three to four levels of catalyst are used.

Specific design values such as space velocity, gas velocity, catalyst pitch, NH_3:NO_x mole ratio, location of the reactor relative to the boiler, etc., are unique for each application and are specified by the vendors on a case by case basis.

NO_x Removal

NO_x removals of 90 percent and higher are potentially obtainable with SCR systems. The systems installed in Japan usually operate at 80 percent removal or lower (as low as 50 percent). The vendors indicate that 90 percent removal can be achieved, but will cost more since more catalyst and a higher NH_3:NO_x mole ratio will be necessary. Keeping the NH_3 emissions low at 90 percent NO_x removal levels will also require either additional catalyst or some other technique for NH_3 control.

Temperature

Temperature is important in the operation of SCR systems as there are both upper and lower limits. If the temperature is allowed to get too high, the catalyst particles will undergo sintering and the catalyst activity will be reduced. Generally, temperatures in the range of 450°C will not cause damage if the exposure time is short, 1 to 2 hours. Low temperatures, <300°C, can allow NH_4HSO_4 to form on the catalyst if sufficient SO_3 is present. This can cause blinding of the catalyst surface, but the deposit can be removed by raising the flue gas temperature to >300°C. Temperatures <100°C can allow water deposition and permanently reduce the catalyst activity.

The desired operating temperature range is 350 to 400°C and for some applications a temperature control system is recommended by the vendor in order to maintain a minimum temperature. Control is achieved by using an economizer bypass, load regulation, or a split economizer. The split economizer can either be a large and small economizer arranged in parallel with variable gas flow through each, or two separate economizers, one upstream and one downstream of the SCR reactor.

Costs

The costs quoted for SCR systems by all of the vendors are similar. Investment costs for a typical 80 percent control system applied to an oil-fired boiler are about ¥3000 to 4000/kW ($12 to $16/kW). A similar system applied to a coal-fired boiler would be about ¥6000 to 7000/kW ($24 to $28/kW). These figures are for new units. The cost of SCR systems installed on existing boilers can be substantially higher. No general figures are available for retrofit systems due to the high variability between individual installations.

One vendor indicated that investment costs for a 90 percent NOx removal system are 20 to 25 percent higher than those for an 80 percent system applied to an oil-fired boiler if increased NH_3 emissions are allowable. For 90 percent NOx control with low NH_3 emissions the costs will be 40 to 50 percent greater, rather than 20 to 25 percent.

AIR PREHEATER VENDORS

There are two air preheater manufacturers in Japan: Gadelius K. K. (Ljungstrom type) and Ishikawajima-Harima Heavy Industries (Rothemuhle type). Gadelius is preparing an air preheater design for EPDC that will resist plugging by NH_4HSO_4, which is a common problem when an SCR system is located upstream. This is especially true if particulate removal also occurs upstream of the air preheater since particulates tend to clean the elements. Gadelius has performed pilot unit tests which indicate that with coal-fired units,

NH_4HSO_4 plugging is not a problem when a cold ESP is used, but is a severe problem if a hot ESP is used. The plugging occurs at the interface between the elements of the intermediate and cold temperature zones.

Both situations will be tested soon on full-scale equipment. At Chugoku Electric's coal-fired Shimonoseki Power Station, an SCR will be installed upstream of the air preheater and cold-side ESP. The SCR system is designed for 50 percent removal and, therefore, slip NH_3 (unreacted NH_3) is likely to be low. An SCR system will be installed downstream of a hotside ESP at EPDC's Takehara Power Station where a modified air preheater design will be used. Two air preheaters of this design will be installed and other electric companies indicate that this design will be used when SCR is applied in conjunction with a hot-side ESP.

The modified design consists of combining the intermediate and cold sections into a single element. This permits more effective soot blowing which, for the new design, is done from both the hot and cold sides. The large element is made of corrosion resistant, coated material similar to typical cold end elements and a spacing of 3.5 mm issued. The design is shown conceptually in Figure 1.

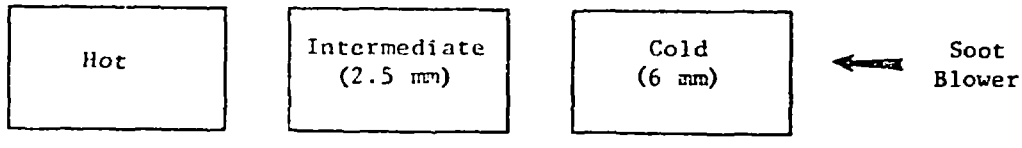

Conventional Arrangement of Heat Transfer Elements

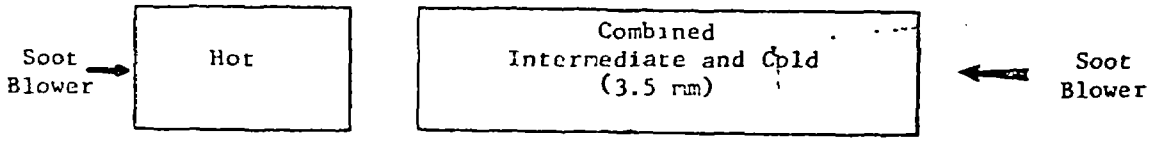

Modified Design by Gadelius K. K.

Figure 1. Comparison of conventional and modified air preheater designs. (Numbers indicate element spacing)

Soot blowing procedures are also modified to include higher frequency and higher steam pressure. The life of this type of air preheater element may be about half of that when SCR is not applied. Operating costs are, therefore, likely to be higher since a larger element will be changed more frequently.

INSTRUMENT VENDORS

The most popular method for continuous stack monitoring of NO_x is chemiluminescence which is employed at 75 percent of the locations using SCR. There are several manufacturers of chemiluminescent monitors including Shimadzu, Horiba and Yunaco. This method is also used for NH_3 measurement by addition of special NH_3 converters; however, the validity of the method is in question when SOx is present in addition to NH_3 and NOx. In these situations, NH_3 concentrations lower than actual are indicated by the instrument. EPA pilot plant tests in the US have indicated that SO_3 definitely causes problems and that SO_2 may also. These tests also indicated that only about 70 percent of the NH_3 is converted to NO.

Other techniques for NOx analysis are nondispersive infrared (NDIR) and nondispersive ultraviolet (NDUV). These two can give erroneous readings when used to measure NH_3 in the presence of SO_2; however, it was indicated that they could be modified to prevent these problems.

Fuji Electric has developed an NDIR instrument and sample conditioning system that reportedly does not have problems with SO_2 interference. With the Fuji Electric analyzer, the sample is passed through two converters to convert NH_3 and NO_2 to NO. An additional converter can be added to reduce SO_3 to SO_2 in order to avoid NH_4HSO_4 deposition in the sample line if necessary. This sample is passed through a differential NDIR analyzer and compared with an unconverted, reference stream to produce an NH_3 signal.

Another technique that is being investigated by Kimoto Electric and others is second derivative spectroscophy. This technique has not yet been applied to measure NH_3 under flue gas conditions.

The Central Research Institute for the Electric Power Industry (CRIEPI) has examined all NH_3 and NO_x analysis methods and feels that direct-inview-gas-analysis (DIGA) coupled with NDIR and NDUV has high potential for this application. The US representative of this instrumentation is Environmental Data Corporation, a subsidiary of Thermo Electron Corporation.

Overall, instrument vendors in Japan have developed chemiluminescent analyzers that can successfully monitor NO_y and NH_3 in flue gas streams with low SO_2 and particulate concentrations. Instruments for use with high concentrations are being developed, but have not yet been applied and demonstrated commercially.

SECTION 4

INSTALLATIONS WITH NO_x CONTROL SYSTEMS

SCR systems have been installed on many gas- and oil-fired boilers and are operating successfully. There is one application to a coal-fired boiler and five others scheduled to start-up in the near future as shown in Table 8. Coal use for power production is expected to increase substantially over the next ten years and it is likely that many of the new boilers will require SCR to limit NO_x emissions. In the US, there are many unresolved issues concerning SCR technology as were listed in Section 1. The site visits were designed to answer these questions.

NO_x CONTROL EQUIPMENT

Performance

Most of the SCR systems in Japan operate at 80 percent NO_x removal since this is sufficient to meet the local emission standards. The operators report that the systems are very reliable and that the performance meets or exceeds the guarantees. This is especially true for catalyst life guarantees. None of the installations visited has required a catalyst change. Current guarantees of catalyst life are two to three years for gas-fired applications, one to two years for oil-fired applications, and one year for coal-fired applications. However, the actual life of the catalyst has exceeded the guarantees at the oil- and gas-fired sources that have been operating for extended periods.

Catalyst

For oil- and coal-fired applications, the honeycomb, plate and pipe catalyst shapes are all used. The catalyst formulation is typically TiO_2 and V_2O_5 combined with small amounts of other materials to improve the

Preceding page blank

TABLE 8. COAL-FIRED APPLICATIONS OF SCR IN JAPAN

Power Company	Power Station	Unit	Size MW	SCR Vendor	Percent NOx Removal	Start-up
EPDC	Takehara	#1	125	B-H	80	mid 1981
EPDC	Takehara	#1	125	KHI	80	mid 1981
Chugoku	Shimonoseki	#1	175	MHI	50	early 1980
Hokkaido	Tomakomai	#1	350	B-H	>80	late 1980
Joban	Nakoso	#8	600	MHI	80	mid 1983
Joban	Nakoso	#9	600	IHI	-	mid 1983

overall performance and keep the SO_2 oxidation low. SO_2 oxidation will typically be about 0.5 to 2.5 percent of the inlet depending on the temperature, catalyst formulation and SO_2 concentration. For gas-fired applications, the pellet shaped catalyst is satisfactory and there are no problems with SO_3.

For the coal-fired applications, the catalyst and reactor are designed in a vertical, downflow arrangement to minimize the potential for plugging by flyash. Soot blowers are installed on some units above the beds to control ash buildup; however, these are installed as a conservative design measure in case plugging develops and are not expected to be necessary.

There are up to four beds within the reactor consisting of one or two layers of catalyst modules, each of which contain many catalyst elements. An example is shown in Figure 2. In some cases a dummy layer of catalyst modules is installed at the reactor inlet to prevent abrasion of the catalyst surface. The homogeneous catalyst shape, while more prone to erosion, does not lose its activity after the surface layer is lost and may be preferred to coated catalyst structures for use with coal-fired boilers. The catalyst manufacturers claim that the coated catalyst will hold up equally well and the use of homogeneous catalyst appears to be a conservative design decision from a performance standpoint in this new application.

Temperature Control

Temperature control is necessary on some units during low load operation when the flue gas temperature falls below 340°C with high SO_2 concentrations or 320°C with medium SO_2 concentrations. On most units, however, the flue gas temperature does not fluctuate widely enough to require control. Where control is necessary, it can be accomplished by using an economizer bypass; auxillary heaters are not used. Where an economizer bypass is used, a mixing zone may be necessary upstream of the reactor to allow mixing of the two gas streams. Another technique for temperature control is load regulation. This

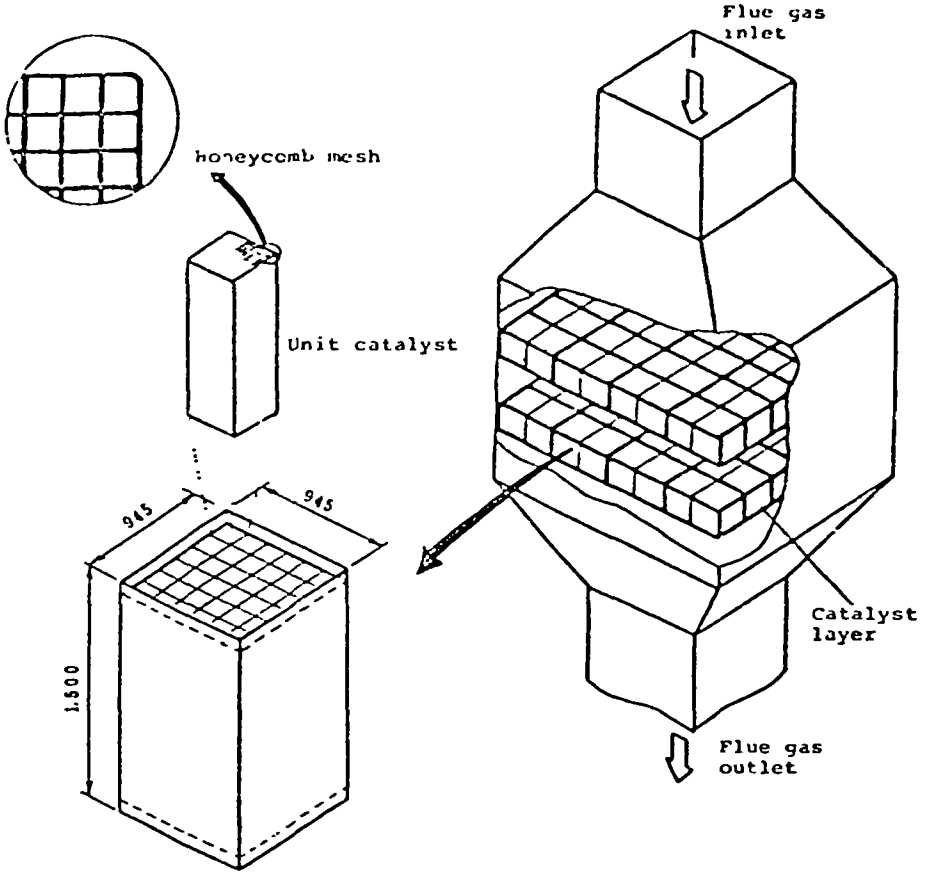

Figure 2. Typical construction of catalyst beds in reactor vessel (IHI).

involves establishing a minimum load for the boiler which corresponds to a satisfactory minimum temperature. On one industrial boiler, flue gas at the desired temperature was obtained by locating the reactor upstream of the economizer entirely.

Labor Requirements

All of the installations contacted indicated that no operating labor is required for the de-NO_x system. The maintenance labor is also minimal, requiring only two men for a few hours every three to five days to unload NH_3 from delivery trucks. More significant labor requirements will occur when a catalyst change is necessary which will be scheduled for the annual outage if possible. While none of the SCR system operators have experienced a catalyst change, one operator estimated the labor requirement for a 175 MW boiler to be about 300 man-days at seven hours per day, or about 20 people for 15 days. Since this operation has not yet been performed, the labor estimates vary widely.

Gas Analysis

At almost all of the installations NO_x and NH_3 are measured by continuous monitors using the chemiluminescent technique. The Shimadzu NHA-302 was the most commonly observed instrument. Other brands are available and alternative techniques are under development. The accuracy of the instruments is checked using wet methods. This type of unit will probably also be applied to the coal-fired SCR systems, although its ability to accurately measure NH_3 is questionable. An improved NH_3 instrument has been tested by Hitachi Zosen at EPDC's Isogo Power Station; however, it has not been applied commercially. Other companies are developing NH_3 analyzers for this application and some of these are discussed in Section 3.

Cost

The costs of the installed units vary widely with the most significant factors being the type of fuel and whether the SCR system is new or a retrofit. Costs for most of the installations contacted are shown in Table 9. These costs are for the SCR equipment only and the total costs for retrofit installations may be significantly different.

IMPACTS OF NOx CONTROL EQUIPMENT ON AND BY OTHER FLUE GAS TREATMENT EQUIPMENT

Particulate Control Equipment

The NH_3 emitted by SCR systems is not expected to adversely impact the operation of a cold-side ESP since NH_3 is often injected upstream of these units on oil-fired boilers for ash conditioning. However, the NH_3 can affect the fly ash utilization by depositing on the surface. The impact of NH_4HSO_4 on baghouse efficiency is not known in Japan and is under investigation. Baghouses do not appear to be applied commercially to much extent in Japan and, hence, this impact is not of great concern to the Japanese.

The location of the ESP relative to the SCR reactor can significantly impact the potential for plugging of the catalyst bed and air preheater, especially on coal-fired units. Pilot plant data indicate that adverse effects may occur with a hot-side ESP which removes particulates upstream of the SCR reactor. The ash that remains in the flue gas tends to be fine and sticky, and can eventually build up and plug the catalyst. The opposite occurs when a cold-side ESP is used because the full ash load has a sandblasting effect which cleans the catalyst surface. This increases the catalyst erosion although there are countermeasures for this effect. This sandblasting effect also tends to keep the air preheater free of NH_4HSO_4 deposits, although a modified air preheater or soot blower may also be necessary. The full ash load allows some of the NH_4HSO_4 to deposit on the ash particles rather than downstream equipment.

TABLE 9. INVESTMENT COSTS OF FULL-SCALE SCR SYSTEMS INSPECTED

Company	Station	Boiler			Catalytic de-NO_x System						
		Unit	Fuel	Size (MW)	Size (MW)	Percent NO_x Removal	Outlet NO_x (ppm)	Vendor	New/Retrofit	Startup	Cost[a] (¥/kW)
Chubu Electric	Chita	#5	LNG	700	700	80	8-10	B-H	New	March 1978	1800
		#6	LNG	700	700	80	8-10	B-H	New	April 1978	1800
		#4	Oil	700	700	80	20	"	Retrofit	March 1980	3600
Chugoku Electric	Kudamatsu	#2	Oil	375	375	80	32	IHI	Retrofit	April 1979	5900
		#3	Oil	700	700	80	26	IHI	New	September 1979	1200
	Shimonoseki	#1	Coal	175	175	50	250	MHI	Retrofit	April 1980	9700[b]
Fuji Oil	Sodegaura	#7	Oil	40	40	87	15	MHI	New	January 1978	--
		--	CO & Oil	10	10	92	15	ICC	Retrofit	July 1976	--
Hokkaido Electric	Tomakomai	#1	Coal	350	90	>80	40	B-H	New	October 1980	~40,000
EPDC	Takehara	#1	Coal	250	125	80	80	B-H	Retrofit	June 1981	~ 7000
		#1	Coal	250	125	80	80	MHI	Retrofit	June 1981	~ 7000

[a] ¥250 = $1

[b] Including boiler modifications for economizer bypass

Since a cold-side ESP is cheaper than a hot-side ESP, a cold-side ESP (or perhaps a baghouse) may be preferable to a hot-side ESP when SCR is used for NO_x control. The resistance to plugging of the air preheater or catalyst bed has not been proven on full-scale, coal-fired equipment either in Japan or in the US for either the hot- or cold-side ESP.

In Japan, hot-side ESP's will be used with most of the SCR systems currently under construction on coal-fired boilers. There are several reasons for this, one being that when these systems were designed several years ago, the SCR catalysts had not been adequately proven with high ash loadings. Other equally important reasons are that cold ESP's are not effective with the low sulfur coal sometimes received in Japan and because there is concern that NH_3 compounds in the collected fly ash will affect the by-product utilization. One possible problem is that an ammonia odor occurs when ash containing ammonia compounds is moistened. In situations where ash is disposed of by landfilling into the inland sea, water pollution problems can occur. If the ash is used in concrete manufacturing, the customer may not want to buy ash contaminated with ammonia compounds. The problem may be eliminated by maintaining slip ammonia at very low concentrations.

Air Preheaters

Several plants have reported problems with air preheater plugging by NH_4HSO_4 which is a product of a condensation reaction between NH_3, SO_3, and H_2O. In some cases, more rigorous soot blowing procedures have controlled the pluggage to the extent that water washing the air preheater is only required once per year during the scheduled outage. The plugging occurs at the interface between the intermediate and cold temperature elements where the temperature is low and soot blowing is least effective.

To prevent air preheater plugging, most plants will modify standard soot blowing procedures to include blowers at both the cold- and hot-sides, more frequent blowing and higher pressure steam or air. Some installations will

use a modified air preheater design which combines the intermediate and cold temperature sections into one continuous element.

It should be noted that these air preheater plugging problems are occurring on units with low ash loadings; no units with high ash loadings have been operated. The effects of NH_4HSO_4 on air preheaters in full-scale, coal-fired boilers are not known. Data from full-scale facilities in Japan should be available by 1982. As mentioned earlier, the high ash load of a coal-fired boiler can have a beneficial cleaning effect on the air preheater.

SO_2 Control Equipment

Systems in which a limestone FGD unit exists downstream of an SCR unit will be operational in the near future in Japan. There are no data available; however, potential problems have been considered.

There are no adverse effects of SCR systems on the performance on downstream limestone/gypsum FGD systems. The FGD system will absorb NH_3; however, reliability and SO_2 removal are not affected. Some potential problems have been identified including fuming and NH_3 contamination. An ammonium bisulfite (NH_4HSO_3) plume can occur which is a function of ambient temperatures and NH_3, SO_2 and H_2O concentrations. Such a plume is not expected, however, since no plume occurs at boilers where NH_3 is used for ash conditioning. In these situations the NH_3 concentration at the scrubber inlet is about 10 ppm, which is very analogous to what would occur if an SCR system was located upstream. It is speculated by some that a plume might occur if NH_3 emissions >50 ppm occur.

SCR systems can impact wastewater treatment requirements since they can add nitrogen compounds to the wastewater by both air preheater washwater and FGD system blowdown. Where this can cause problems such as eutrophication, an activated sludge or ammonia stripping process is used to remove the nitrogen

compounds. Where this is not a problem, the air preheater washwater can be blended with the regular wastewater. There are also potential solid waste impacts.

Typically in Japan, the gypsum generated by FGD systems is washed if it is to be used commercially. Ammonium salts in the gypsum may cause wastewater problems and require treatment such as activated sludge. In Japan, this problem is location specific since the water regulations for ocean areas are different than those for inland sea areas. In situations where the gypsum is used as landfill material, no ammonia leaching problems are anticipated. This is based on the fact that in Japan there are three plants which use an NH_3/CaO dual alkali FGD system and experience no problems with ammonia in the gypsum by-product.

SECTION 5

GOVERNMENTAL AGENCIES AND INDUSTRY GROUPS

GOVERNMENTAL AGENCIES

Environmental regulation in Japan is similar to the US in that a federal agency establishes the minimum requirements for the country as a whole. Local governments have the option of adopting the federal standards or establishing their own, more stringent standards. The local governments utilize sophisticated air quality monitoring systems to assure that the public is protected and that the regulations are complied with.

Federal Regulations

The Japan Environment Agency has recently modified the standards for ambient air quality and established three concentration ranges based on a daily average sample. Above 0.06 ppm NO_2, countermeasures must be undertaken to reduce the level to 0.06. Within the range 0.04 to 0.06 ppm NO_2, no significant change is allowed; areas below 0.04 ppm NO_2 are allowed to deteriorate.

The Environmental Agency also sets emission standards for point sources. The standards, shown in Table 10, are such that they can be met through use of combustion modifications alone.

Local Regulations

It is the local governments, city and prefectural, that have required many of the SCR applications. This occurs primarily when the plant owners negotiate with the local citizens over a plant siting or expansion. A

TABLE 10. EMISSION STANDARDS FOR NO_x IN JAPAN AS OF AUGUST 2, 1979
(Source: Japan Environmental Summary, Sept., 1979)

Type of facility		Unit: 1,000 Nm^3/h	Date of installing / O_2%	Standard value (ppm)				
				before Aug 9, '73	after Aug. 10, '73 before Sept 9, '75	after Sept. 10, '75 before June 17, '77	after June 18, '77 before Aug 9, '79	after Aug. 10, '79
Boiler	Gas firing	500 & above	5	130		100	60	
		100 - 500				100		
		40 - 100		130			100	
		10 - 40		150		130		
		5 - 10		150				
		less than 5						
	Solid material firing	100 & above	6	til Apr 30,'80 600 from May 1,'80. 480	480		400	
		40 - 100		til Aug. 9,'82 600 from Aug.10,'82 480				
		10 - 40		til Aug 9,'82 600	from Aug.10,'82 480	480		
		5 - 10		from May 1,'80 480				
		less than 5		from Aug 10,'84 480				
	Liquid firing	500 & above	4	til Apr. 30,'80 230 from May 1,'80: 180	180	150	130	
		100 - 500		til Apr 30,'80 230 from May 1,'80 190		150		
		40 - 100		190				
		10 - 40		from May 1,'80 230				
		5 - 10		(- Sept 9,'77) from Oct. 1,'80 250			(Sept. 10,'77 -) 180	
		less than 5		(- Sept 9,'77) from Aug. 10,'84 250				

cooperative spirit which exists between the local citizens and the plant provides the driving force for the plant's compliance with the negotiated emission limits.

Ambient Air Quality Monitoring and Management

Each prefectural government and some city governments maintain a system of ambient air and stack monitors which measure pollutant concentrations at strategic points throughout the prefecture. A typical example is shown in Figure 3. These data are relayed to a central data processing center where it is compiled and reduced. If an air pollution problem occurs, such as photochemical smog, the center notifies key industries to cut back emissions and traffic is controlled in the problem area. The center also has the responsibility of notifying the local citizens and advising them. There is good cooperation between the plants and the center, and the system seems to work well.

INDUSTRY GROUPS

The two industry groups contacted, the Central Research Institute of the Electric Power Industry (CRIEPI) and the Federation of Electric Power Companies (FEPC), are both looking to the future when coal will be a much more significant energy source. Coal-fired boiler capacity is expected to increase from 4410 MW in 1978 to about 34,500 MW by 1995 and NOx control will probably be required on all of these. They feel that combustion modifications and SCR have been successfully demonstrated on gas- and oil-fired boilers and that these techniques will also be useful on the coal-fired units.

SCR still has some problems to overcome in order to be used successfully with coal. The most significant of these at the present time are dealing with flyash or the lack of it, solving the air preheater plugging problems and developing a continuous NH_3 analyzer. Programs to meet these objectives are already underway. EPDC is installing full-scale SCR units at Takehara while continuing pilot unit testing at Isogo. The full-scale units will utilize the new design air preheater built specifically to avoid plugging and corrosion.

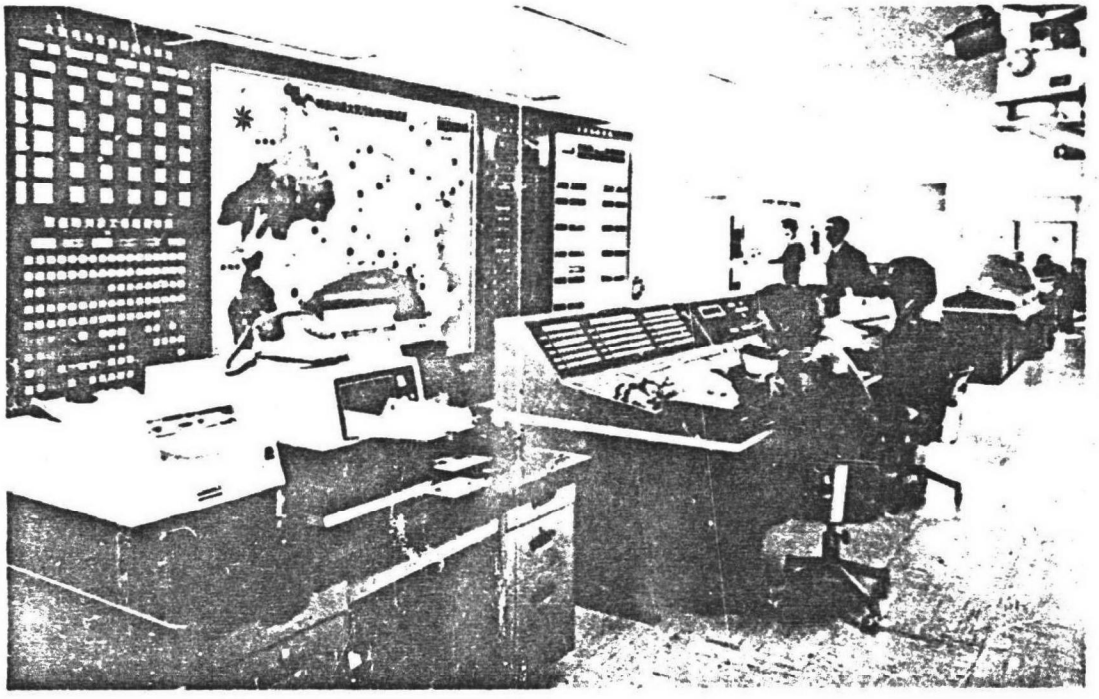

Figure 3. Kanagawa prefectural government section air pollution monitoring center.

APPENDIX A

PROCESS AND EQUIPMENT VENDORS

BABCOCK-HITACHI K.K.

Kure Works

Kure, Hiroshima Prefecture

March 13, 1980

Hiroshi Kuroda, Department Manager

T. Hiruta, Senior Engineer

Takashi Akiyama, Senior Engineer

David Mobley

Jumpei Ando

Gary Jones

Doug Maxwell

Preceding page blank

BABCOCK-HITACHI

Babcock-Hitachi is a manufacturer of boilers and pollution control equipment as well as several other types of industrial equipment. They have developed both pellet and plate type catalysts for NO_x control and have supplied several SCR systems as shown in Table 11. Two of the units will be installed on coal-fired boilers; one at Hokkaido (Plant A-6) and another at Takehara (Plant A-12). Of the utility installations listed, plants A-1, 2, 3, 4, 5, 7, 8, and 9 are currently in operation.

Babcock-Hitachi has conducted several pilot unit tests in the development of their process including coal-fired testing at EPDC's Takehara power station. At this pilot unit flue gas was taken from upstream of the air preheater and ESP, passed through a small scale hot-side ESP, the SCR reactor and a small scale air preheater. Some data from this unit are shown in Table 12. Tests with low ash loadings were conducted for 10,000 hours. A bypass around the ESP was then installed to perform tests with high ash loadings.

The catalyst used for high dust applications is a plate type of catalyst with a configuration similar to that of air preheater elements, as shown in Figure 4. The plates are metal with catalyst coated onto the surface. The individual plates are held together in a metal basket (0.5 meter cube) and several of these baskets are combined to make a module. The modules are stacked onto structural steel supports within the reactor by using a special dolly with jacks on it. The dolly travels on additional structural steel within the reactor. Usually, three separate stages are used in the reactor. The catalyst and the loading procedure are also depicted in the figure.

Preceding page blank

TABLE 11. SCR INSTALLATIONS BY BABCOCK-HITACHI AS OF MARCH 1980

#	Plant	Gas flow rate (Nm^3/h)	Fuel	Percent NO_x Removal	Operating date	Remarks
1	A-1	300,000	Crude oil	80	Jun., 1977	25% of 450 MW
2	A-2	2,000,000	LNG	80	Mar., 1978	700 MW
3	A-3	2,000,000	LNG	80	Mar., 1978	700 MW
4	A-4	483,000	Heavy oil	50	Jul., 1978	175 MW
5	A-5	466,000	Heavy oil	30	Jul., 1978	156 MW
6	A-6	280,000	Coal	90	Sept., 1980	25% of 350 MW
7	A-7	980,000	Kerosene	80	Mar., 1981	90 MW (Stag)
8	A-8	466,000	Heavy oil	30	Jan., 1980	156 MW
9	A-9	450,000	Heavy oil	30	Feb., 1980	156 MW
10	A-10	470,000	Heavy oil	30	May, 1980	156 MW
11	A-11	740,000	Heavy oil	80	Jul., 1980	250 MW
12	A-12	399,500	Coal	80	Jul., 1981	50% of 250 MW
13	A-13	970,000	Heavy oil	80	Jan., 1981	375 MW
14	A-14	1,330,000	Heavy oil	80	Jun., 1983	500 MW
15	A-15	1,565,000	Heavy oil	80	May, 1981	600 MW
16	A-16	1,645,000	Heavy oil	80	Jul., 1981	600 MW
17	A-17	470,000	Heavy oil	30	Aug., 1981	156 MW
18	B-1	15,000	Heavy oil	70	Sept., 1976	
19	B-2	20,000	Heavy oil	90	Sept., 1977	
20	B-3	16,000	Kerosene	90	Oct., 1977	
21	B-4	20,000	Heavy oil	90	Apr., 1978	
22	B-5	30,000	Kerosene	90	Sept., 1978	
23	B-6	50,000	Tar Sand Oil	80	Jan., 1980	
24	C-1	500,000	COG/BFG	95	Oct., 1976	
25	C-2	3,600	Electric Furnace	84	Jan., 1977	
26	C-3	10,000	Acid Pickling Gas	90	Dec., 1979	

Note 1: A-utility boiler; B-industrial boiler, C-others
Note 2: In A-4, 5, 8, 9, 10, and 17 plate type catalysts are installed in the restricted space of the flue gas duct between economizer and the air preheater.

TABLE 12. DATA FROM BABCOCK-HITACHI PILOT PLANT AT EPDC TAKEHARA POWER STATION

NO_x Removal	80%
$NH_3:NO_x$ Mole Ratio	0.83
Gas Temperature	350°C
Reactor ΔP	20 mm H_2O
Flue Gas Flow Rate	1250 Nm^3/hr
SO_2 Conversion to SO_3	<0.2%
Inlet SO_2	1500 ppm
Test Period	6000 hours

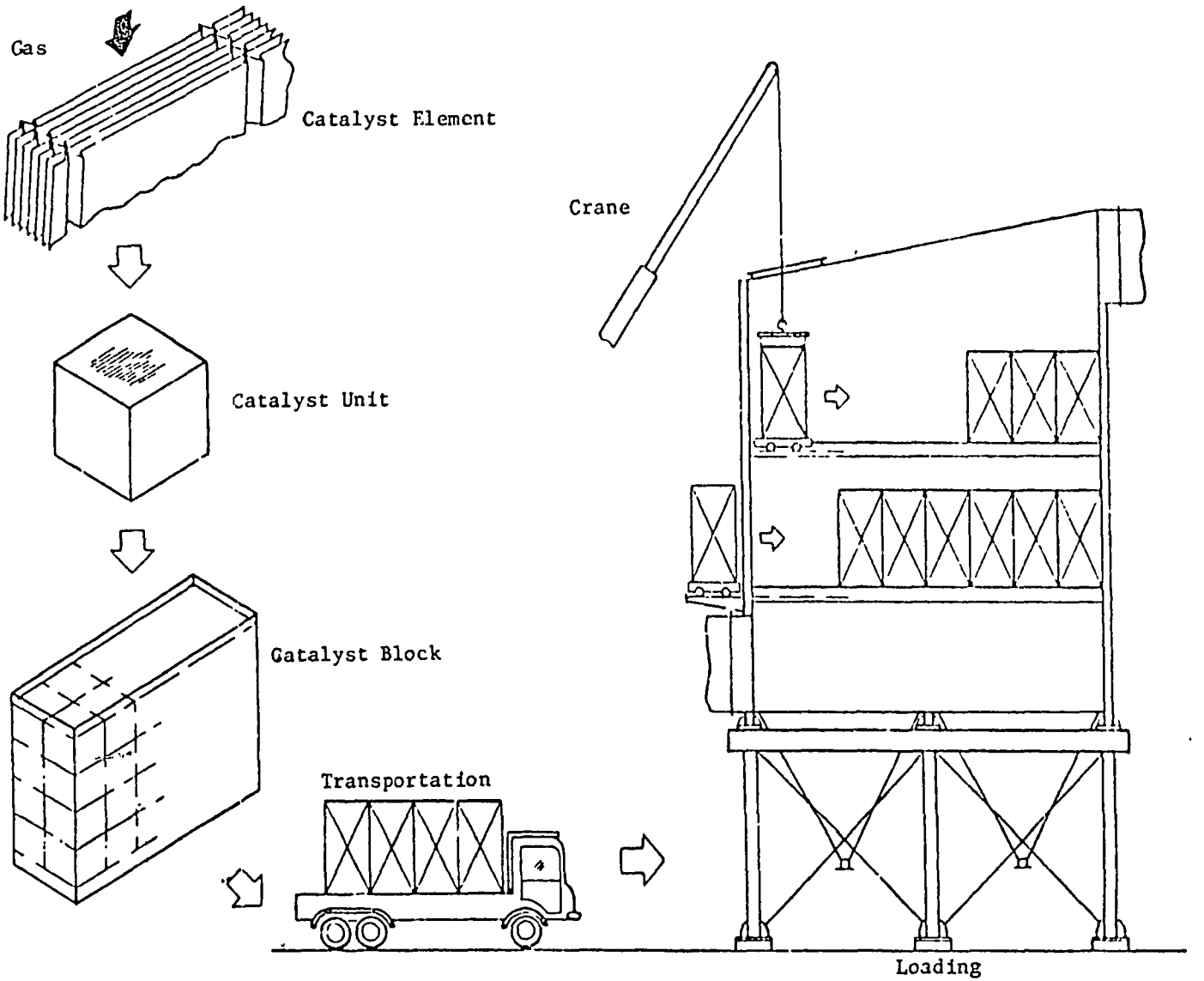

Figure 4. Assembling and Loading Procedure of Catalyst

The catalyst and reactor are capable of handling particulate concentrations of 15-20 g/Nm^3 and achieving 82 percent NO_x removal with a pressure drop of 12 to 13 mm H_2O. Abrasion testing has been performed in laboratory equipment where the flue gas flow rate varied from 5 to 25 m/s and the dust load was also varied. From these accelerated erosion tests, it is calculated that, after 20,000 hours of normal conditions, the catalyst weight loss would be <1.0 percent. This loss did not affect the performance of the catalyst. Reportedly, the catalyst performs equally well with either a hot- or cold-side ESP and, therefore, must not require the abrasive effect of fly ash for cleaning.

The recommended operating temperature is 300 to 420°C with the SO_3 content determining the actual low temperature limit. A few minutes of high temperature will not harm the catalyst; however, the implication is that extended high temperature periods can deactivate it. On some industrial boilers, a gas heating system is used to prevent low temperature excursions. This arrangement is used at plants B-2, 3, and 5. No heating or economizer modifications are necessary on the utility installations. Babcock-Hitachi also has a low temperature catalyst that can be used under low temperature, low sulfur conditions.

NH_3 emissions are reportedly <10 ppm and sometimes <5 ppm; however, these are not measured directly as NH_3. Babcock-Hitachi determines NH_3 emission by a calculation assuming a 1:1 reaction between NH_3 and NO_x and measuring the NO_x concentrations. NH_3 emissions have caused no adverse effects on the performance of downstream FGD equipment.

Problems can occur with NH_4HSO_4 pluggage in the intermediate section of conventional air preheaters. A low SO_2 conversion catalyst has been developed to minimize these problems. To eliminate this problem, Babcock-Hitachi recommend a modified air preheater design in which the intermediate and cold sections are manufactured as one continuous piece. Hot-side soot blowing is recommended in addition to cold-side soot blowing.

The costs for a 600 MW SCR facility with 90 percent NO_x control are estimated to be 50% greater than those for 80 percent NOx removal. Catalyst costs are the primary difference between the 80 and 90 percent removal cases since catalyst volume requirements are significantly higher as shown in Table 13.

TABLE 13. CATALYST REQUIREMENTS AS A FUNCTION OF NO_x REMOVAL

Percent NO_x removal efficiency	Relative catalyst volume
80	100
90	130[a]

[a]The specific amount will depend on the NH_3:NO_x mole ratio and the NH_3 emission specification.

The guarantee ranges from one to two years depending on the particulate loading of the gas. However, Babcock-Hitachi is planning to make a two-year guarantee in an offer for one high particulate level application.

CATALYST AND CHEMICALS INDUSTRIES CO.

Headquarters

Tokyo, Japan

March 24, 1980

Royozo Aoi

Yōichi Nishimura

Hisao Nishikawa

David Mobley

CATALYSTS AND CHEMICALS INDUSTRIES COMPANY

Catalysts and Chemicals Industries Company (CCIC) has supplied 1500m^3 of catalyst to SCR process vendors for use in electric power plants. Their primary product in this area is homogeneous, honeycomb catalyst elements which are preferred to coated types because they maintain activity even if eroded. This area is one of the current areas of SCR catalyst R & D which include:

- resistance to erosion
- improving de-NO_x activity
- suppressing SO_2 oxidation activity
- minimizing NH_3 emissions

Particulates from coal-fired boilers can erode the inlet face of the honeycomb and, although NO_x removal is apparently not seriously affected, the erosion can cause structural problems over a long period of time. They are also developing a new manufacturing method for the TiO_2 base material which will provide erosion resistance with coating.

It is desired to keep the SO_3 concentration in the outlet gas low in order to avoid problems with NH_4HSO_4 formation downstream; however, the V_2O_5 catalyst tends to oxidize SO_2. In applications where the SO_2 concentration is low ($\leq$100 ppm) SO_2 oxidations of 5 percent are allowable. For medium and high SO_2 concentrations, SO_2 oxidation is suppressed to <0.5 percent by the use of complex compounds of vanadium oxide with metals such as tungsten and molybdenum. The activity of the catalyst can be reduced by these compounds in proportion to their concentration.

CCIC can make a catalyst in a tubular or pipe shape, but prefers the honeycomb for several reasons. The tubular catalyst, they claim, is difficult to assemble, has a low surface area and requires a large volume

Preceding page blank

for high NO_x removal. For example, a 600 MW plant will require 300 to 400 m^3 of honeycomb catalyst, but 3 to 5 times that amount if a tubular catalyst is used. The honeycomb catalyst is illustrated in Figure 5.

The catalyst dimensions depend on the flue gas composition. For low and medium sulfur oil, they supply a catalyst with a 5.7 to 6.6 mm channel diameter and a 1.3 to 1.4 mm wall thickness. Catalysts with larger channel diameters and wall thicknesses are necessary for coal. Either can be manufactured in lengths of up to one meter. Some rules of thumb for coal vs oil fired applications are that for coal, the space velocity will be 65 percent of that for oil, the catalyst volume will be 50 to 60 percent greater and the catalyst weight will be 20 percent greater.

High temperatures for short periods will not harm the catalyst; however, exposure to high humidity can be detrimental. The 10 to 20 percent H_2O typically found in flue gas is not harmful at 350°C. Problems can occur if the temperature drops to $\leq$100°C where condensation takes place. Two things can happen. Condensed water in the pores is difficult to evaporate due to the capillary pressure resistance to evaporation. Secondly, water can make the metal crystals aggregate. Both will reduce the catalyst activity and the latter effect will cause permanent damage.

The catalyst guarantee will depend on the specific flue gas conditions of the application. One year after start-up is typical; however, for low sulfur applications, two years may be offered. The company will take responsibility for disposing of spent catalyst although so far they have not received any. They plan to recover the useful metal and discard the rest. Vanadium, tungsten, and molybdenum may pose waste disposal problems and require treatment. For US applications, it may be economically prohibitive to return the catalyst to Japan for disposal when compared to the cost of local disposal.

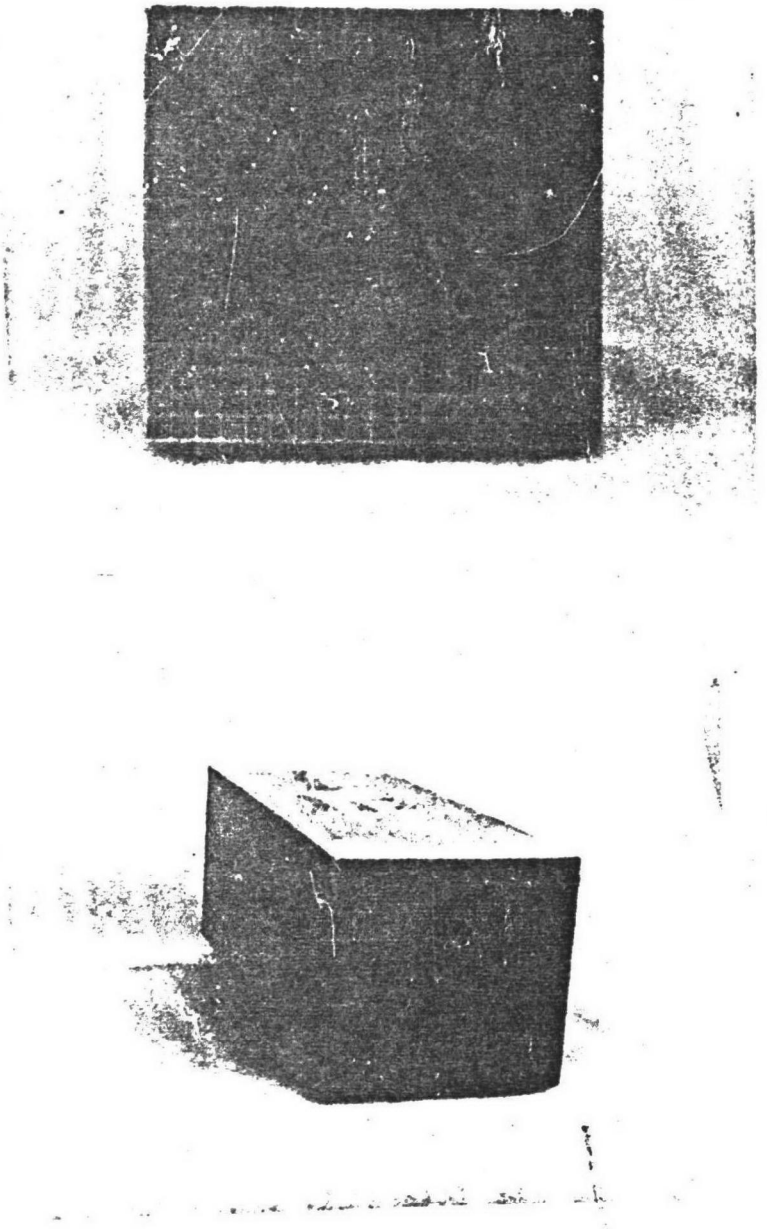

Figure 5. Honeycomb catalysts manufactured by Catalyst and Chemicals.
Low and medium sulfur oil application.
Channel diameter = 5.7 to 6.6 mm.
Wall thickness = 1.3 to 1.4 mm.

Soot blowing the catalyst may be necessary on medium and high sulfur applications. Once per day should be sufficient for oil; more frequently for coal. They have no preference for air or steam.

EBARA CORPORATION

Headquarters

Tokyo

March 25, 1980

Koichi Yamada, Manager, Plant Engineering Dept.

Tohru Agarida, Chief, Plant Business Development Sales

Keita Kawamura, System Engineering Dept.

Shinji Aoki, System Engineering Dept.

Charles Olson, Consultant

David Mobley

Gary Jones

Doug Maxwell

EBARA CORPORATION

The EBARA Corporation has been developing their process for simultaneous removal of NO_x and SO_x for several years. The process utilizes electron beam radiation and NH_3 to produce a reaction between both SO_x and NO_x. One potential arrangement of the equipment is shown in Figure 6. One new aspect that makes the current design different than previous designs is the addition of NH_3 to the flue gas stream. With NH_3 present, the reaction products are $(NH_4)_2SO_4$ and NH_4NO in solid form, whereas without NH_3, a chemically uncharacterized powder is formed. NH_3 is injected in the following mole ratios: 1 to 1 for NO_x and 2 to 1 for SO_x.

Although the equipment is located downstream of the air preheater, it is necessary to cool the 150°C gas further to 70°C with additional heat exchange equipment. The reactions that take place are summarized in Figure 7. The reaction products form solid particulates which are removed by an electrostatic precipitator. Flue gas then passes through a fan to compensate for reactor draft loss, a heat exchanger to recover heat from the feed gas and is routed to the stack. The collected product is suitable for use as fertilizer and has been demonstrated to be effective.

The reactor consists of a 304 stainless steel duct which is surrounded by electron accelerators situated behind 30 μm titanium foil windows as shown in Figure 8. In this manner, the accelerator never comes in contact with the flue gas. The reactor is surrounded with two or more accelerators in order to provide an even radiation dosage across the reactor cross section. Pressure fluctuations are not expected to damage the titanium foil since the pilot unit operated for 1300 hours with no damage. The reactor and accelerators are housed in a concrete building for safety considerations.

Preceding page blank

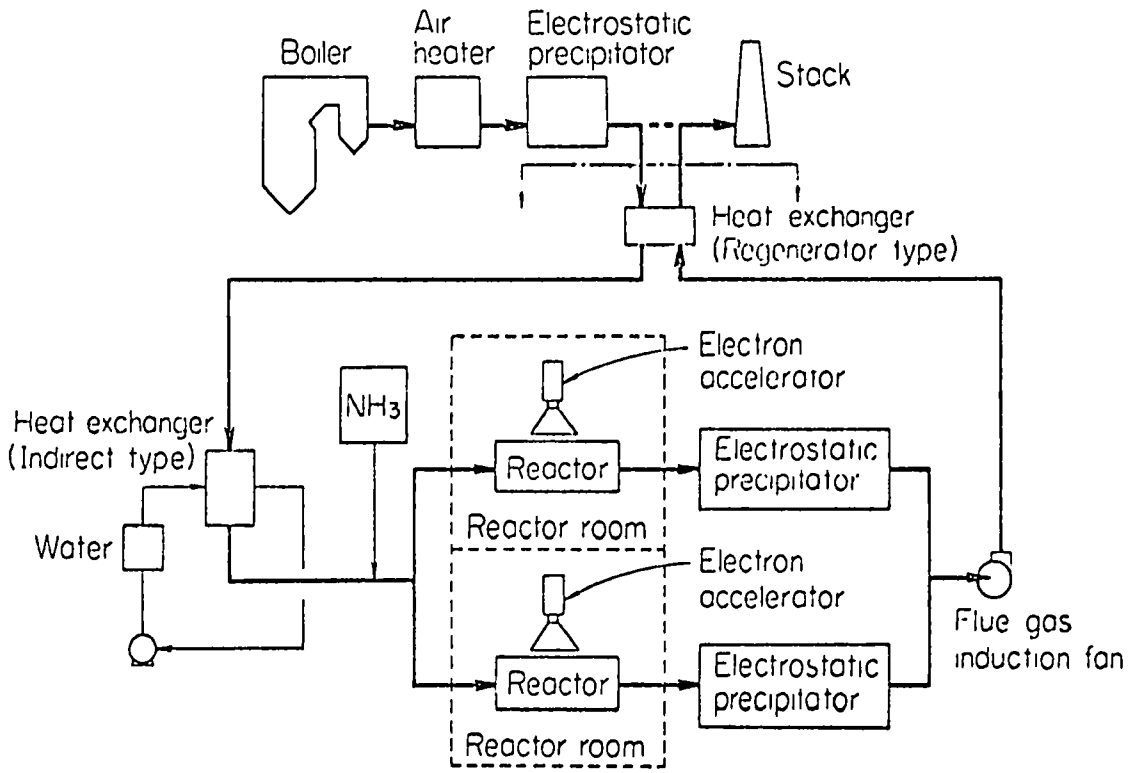

Figure 6. Flow sheet for EBARA electron beam process.

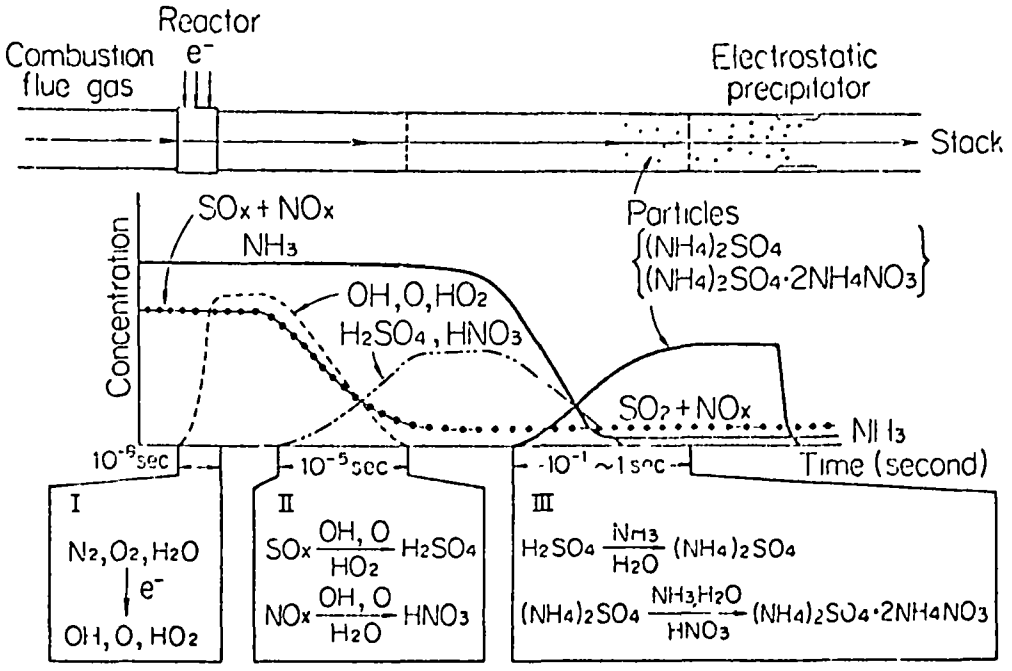

Figure 7. Diagram of reaction mechanism for EBARA process.

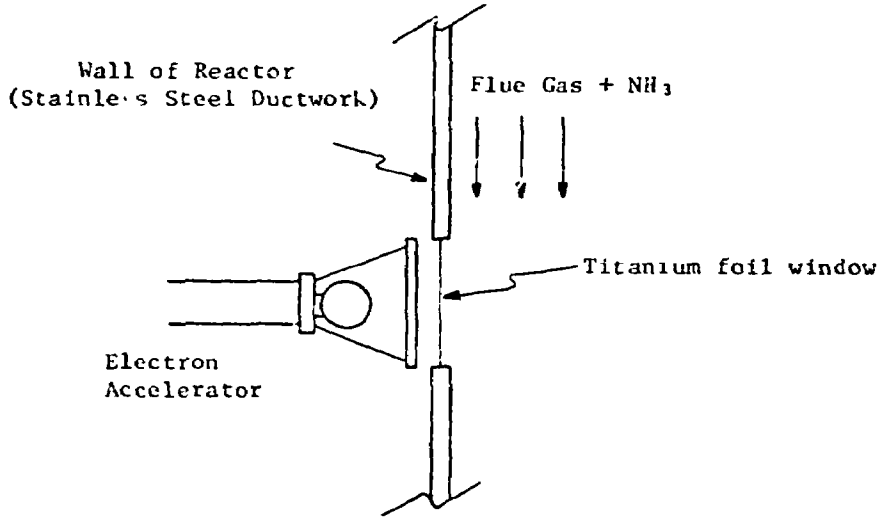

Figure 8. Arrangement of electron accelerator and reactor.

The process has been tested on pilot scale equipment using gas from a sintering furnace at a steel plant. The electron distribution in the reactor was not uniform, and an impeller was used to rotate the gas to achieve a more uniform integrated dose for the gas flow. As shown in Figure 9, the removal of SO_x and NO_x was more efficient when the ratio between the impeller rotation speed and the gas flow rate was about 1/60 rpm per Nm^3/h.

The pilot unit treated 3,000 - 10,000 Nm^3/h of gas for one year and during the test period a 30-day continuous run was performed. The data from this run are presented in Figure 10. Removal of NO_x remained at about 80 or 90 percent depending on the NO_x analysis method used. Two NO_x analysis methods, PDS and NEDA, are shown since EBARA has done tests which indicate that the PDS method produces low measurements of NO_x concentration when gas is irradiated and contains NH_3. EBARA used a modified NEDA method in which NaOH was added to the sample flask and O_2, rather than O_3, was used as the oxidant.

The removal capabilities of the EBARA process are summarized in Figure 11 where removal is shown as a function of electron dosage. A dosage of 5 wh/kg is typical.

Tests with a simulated coal combustion gas are shown in Table 14. Compared with the results shown in Figure 10 and Figure 11, SO_x and NO_x removals in Table 14 are slightly lower. However, by using results such as those shown in Figure 9, a simple interpolation suggests that simultaneous SO_x and NO_x removal more than 90 percent could be obtained by operating the equipment at the optimum rotation ratio of 1/60 rpm per Nm^3/h.

The ash present in coal-fired flue gas will absorb some energy from the accelerator, but this loss is low. For example, with 30 g/Nm^3 of fly ash, about 3 percent of the energy will be lost to absorption by fly ash.

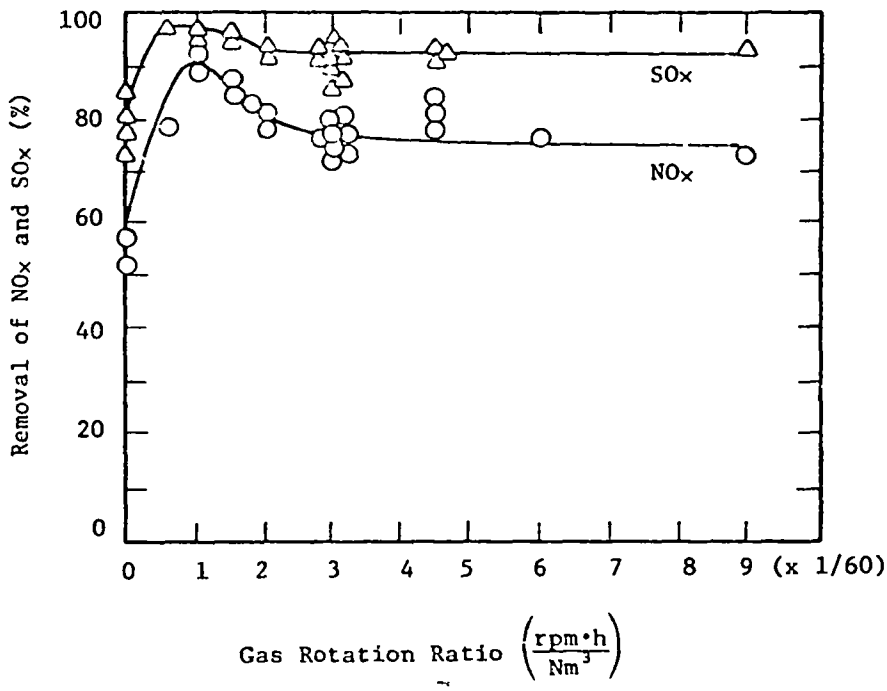

Figure 9. Removal of SO_x and NO_x vs. gas rotation ratio.

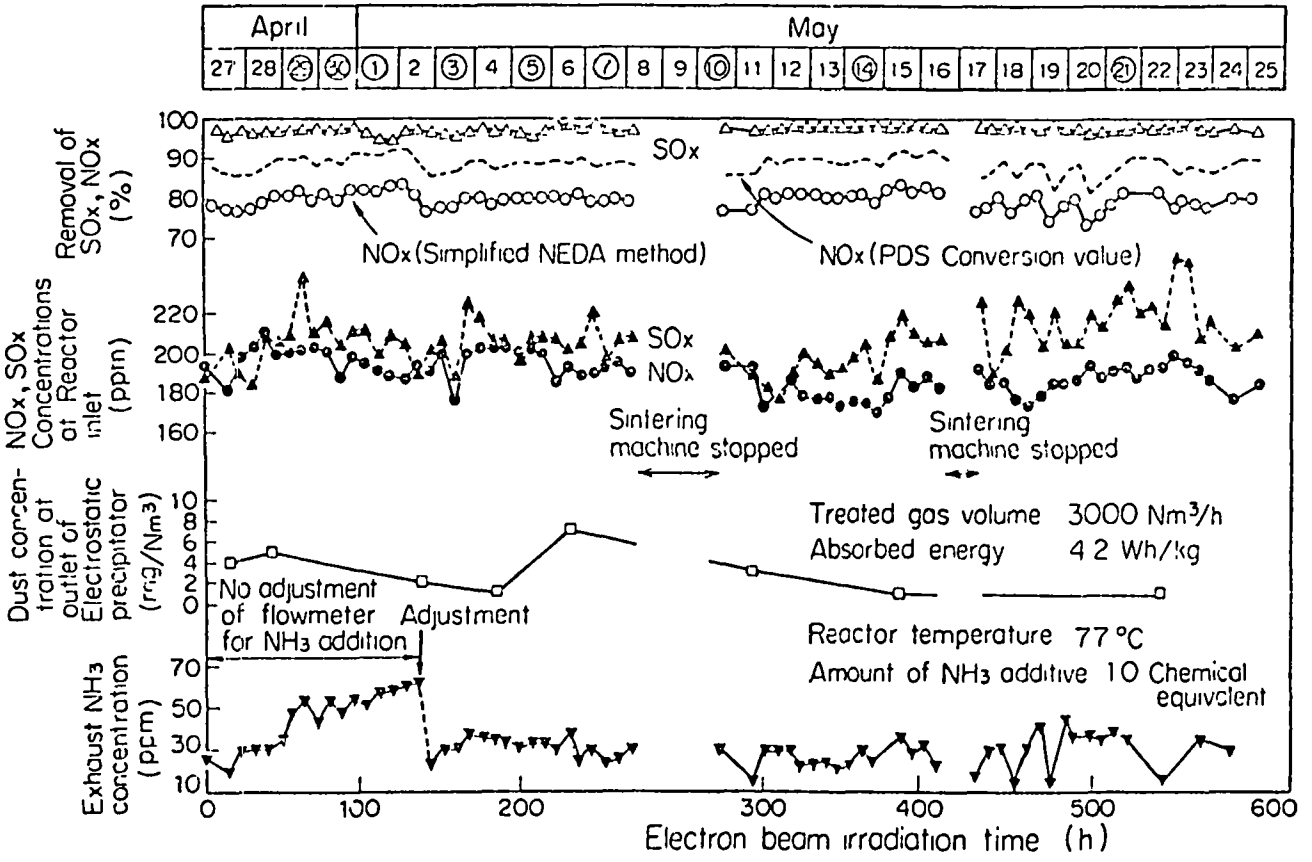

Figure 10. Continuous operating data for EBARA pilot unit.

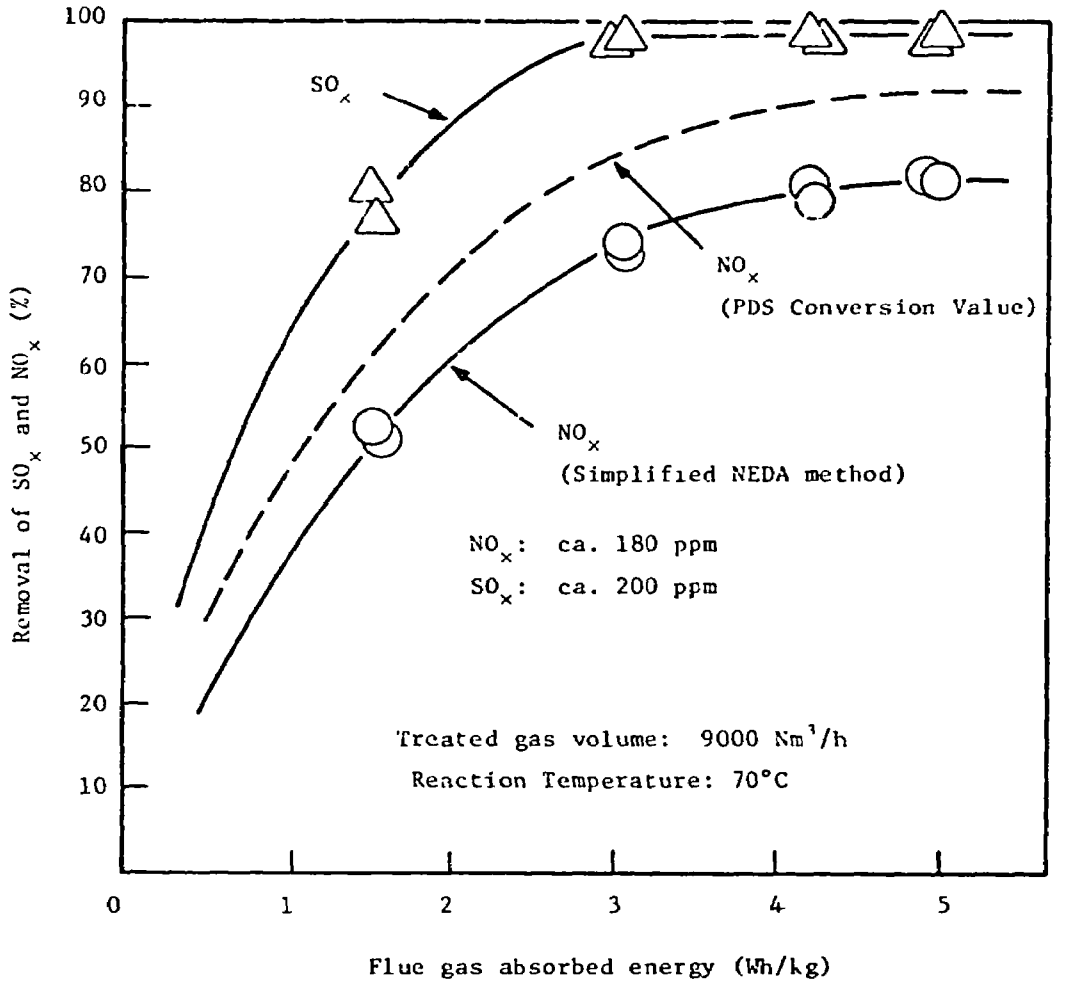

Figure 11. NO_x and SO_x removal levels achievable by the EBARA electron beam process.

TABLE 14. PERFORMANCE OF EBARA PROCESS WITH HIGH SO_x/NO_x CONCENTRATIONS USING A SIMULATED COAL-FIRED FLUE GAS

Conditions
Gas Flow = 1500 Nm^3/h (900 SCFM)
Temperature = 75°C
SO_x = 1900 ppm
NO_x = 620 ppm
Energy Absorbed = 1.8 mrad (5.0 watt-h/kg)
Results
SO_x Removal = 80%
NO_x Removal = 82%
Exhaust NH_3 = 50 ppm

The costs of the EBARA process have been estimated for a system treating 1.5 to 3.0 x 10^6 Nm^3/h of flue gas from an oil- or coal-fired power plant. The gas composition used in the cost calculation is 200 ppm NO_x, 1500 ppm SO_x and 0.1 to 0.2 g/Nm^3 of particulates. Removal efficiencies are 90 percent for SO_2, 80 percent for NO_x and 99.8 percent for particulate products. For this situation, the capital costs are ¥25,000/kw ($100/kw) and operating costs are ¥1.85/kw (7.4 mill/kwh). This calculation does not include any by-product credit for the ammonium sulfate and ammonium nitrate solids.

FUJI ELECTRIC CO.

Tokyo Works

Tokyo

March 24, 1980

S. Ueda, Assistant Manager of R & D Department
Atsuo Watanabe, Manager of Analyzer Development Group
Eiji Tsuji, Manager of Administrative Department
Masahiro Murasee, Chief of Administrative Department
Takashi Kimoto, (Kimoto Electric Co.)

David Mobley
Gary Jones
Doug Maxwell

FUJI ELECTRIC CO.

Fuji Electric manufactures a variety of instruments, one of which is an ammonia analyzer. The overall system utilizes a series of converters followed by a nondispersive infared (NDIR) analyzer. The output is compared to a reference signal and NH_3 is calculated by difference. The basic arrangement is shown in Figure 12. The sample first passes through a filter on the probe tip to remove particulates. The sample probe material of construction is very important. For example, with a stainless steel probe, the NH_3 will react with NO and NO_2 in a typical de-NO_x reaction as shown in Figure 13. Alternatively, a titanium probe will not affect the NH_3 concentration.

In the first converter, NH_3 is oxidized to NO at 700°C. The converter also oxidizes some NO to NO_2 via a side reaction. The overall reaction in the first converter is

$$NH_3 \xrightarrow{O_2} 0.97\ NO + 0.03\ NO_2 + 1.5\ H_2O$$

This converter has also an undesirable side reaction in which several percent of the SO_2 is oxidized to SO_3. The sample stream is then passed through a second converter also at 700°C to convert NO_2 to NO. This converter consists of specially treated activated carbon which reacts with NO_2 according to the following reaction

$$NO_2 + C \longrightarrow NO + CO$$

At low NO_x concentrations, activated carbon is claimed to be superior to MnO_2, which is used as an NO_2 converter in some chemiluminescent instruments.

Following the conversion steps, the sample passes through the pump and a permapure dryer in order to reduce H_2O interference to below 0.5 ppm

Preceding page blank

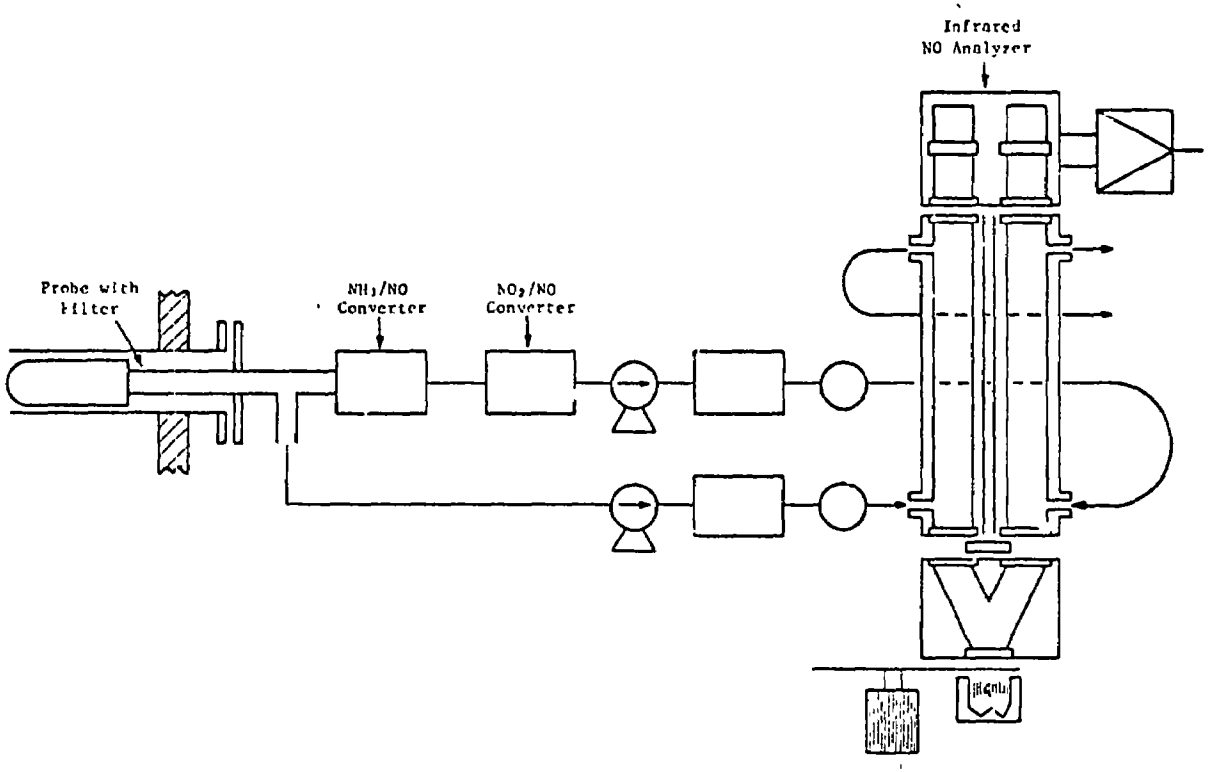

Figure 12. Schematic of Fuji Electric NH_3 Analyzer.

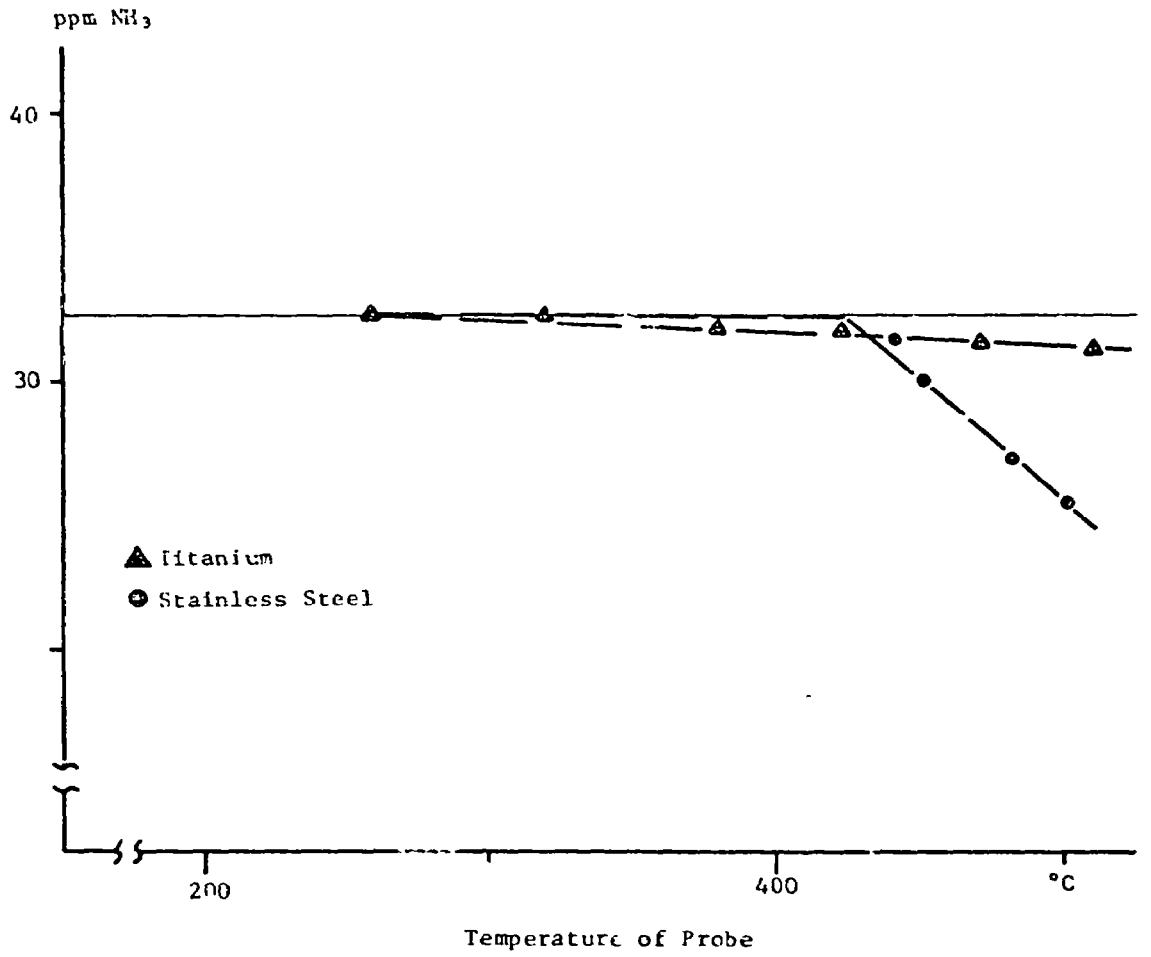

Figure 13. Influence of probe material on NH_3 concentration observed.

NO equivalent. The sample flow diagram is shown in Figure 14. A separate "reference" stream is taken at the same flow rate and dried, but not passed through any converters. Each stream is then passed through the NDIR differential type NO analyzer shown in Figure 15. The NH_3 concentration is proportional to the difference in light absorption.

The instruments performance specifications are shown in Table 15.

TABLE 15. PERFORMANCE SPECIFICATIONS OF FUJI ELECTRIC NH_3 ANALYZER

Item	Specification
Sample Gas Temperature Range	200 to 400° C
Sample Gas Pressure Range	-150 to 350 mm H_2O
Sample Gas Composition	> 1% O_2 < 1000 ppm CO < 500 ppm HC
Noise	0.25 ppm
Minimum Detectable Concentration	0.5 ppm
Drift	± 1 ppm/week
Interference	
15% CO_2	< 0.5 ppm
SO_2, CO, HC	Negligible

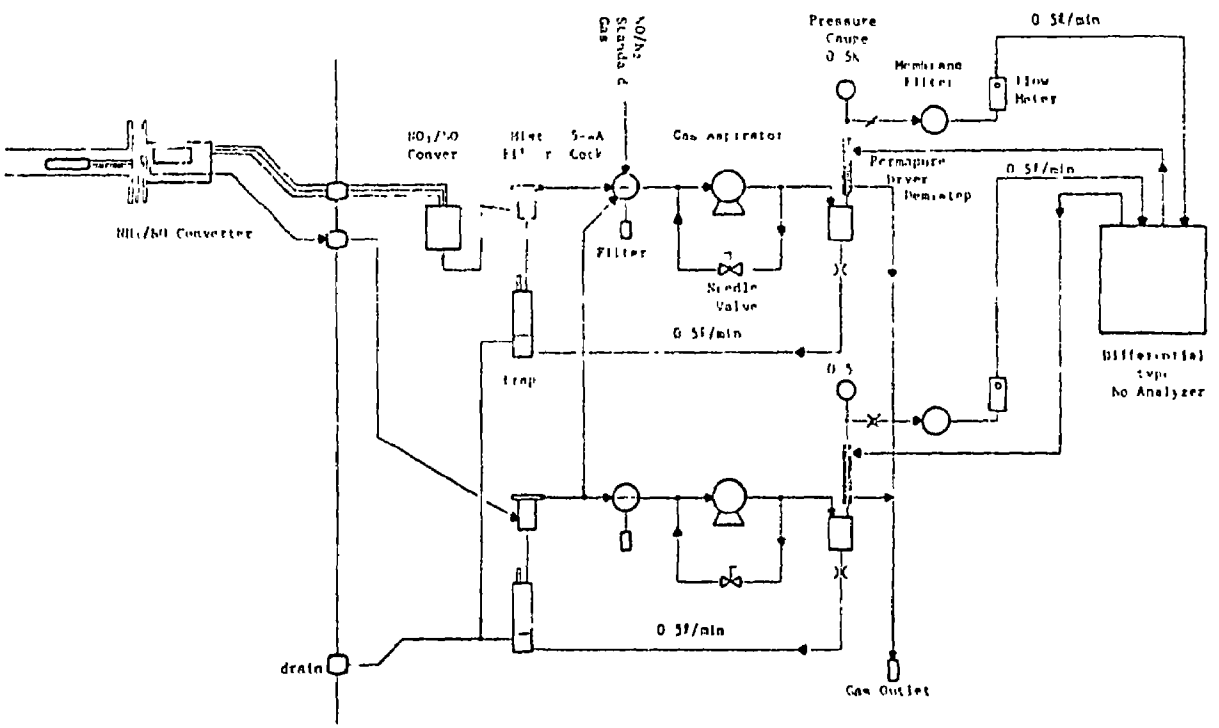

Figure 14. Sample flow diagram of Fuji Electric NH_3 Analyzer.

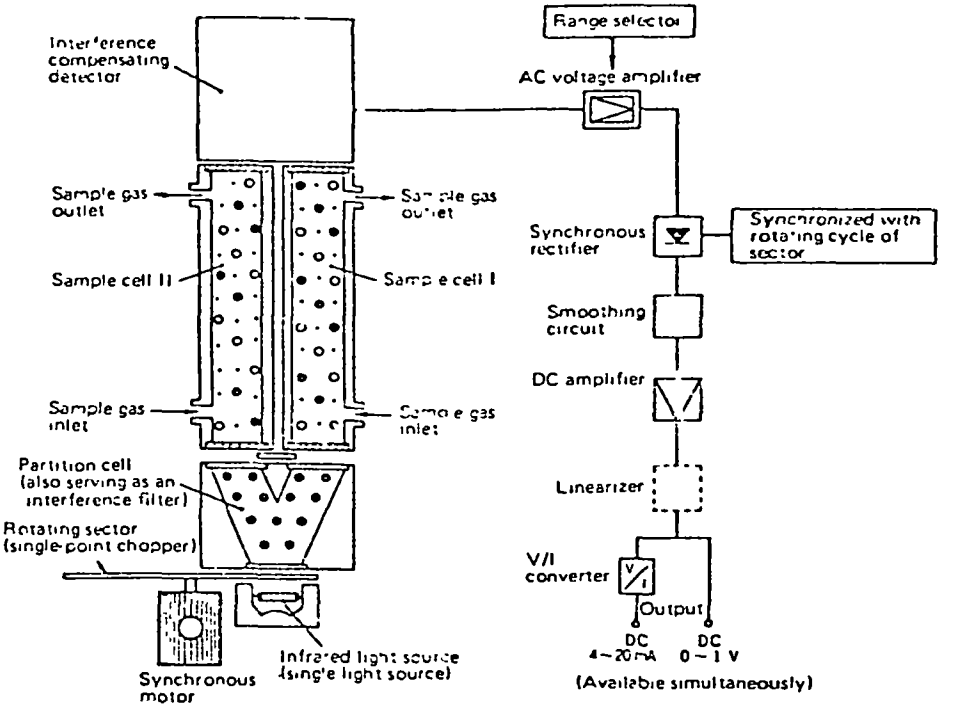

Figure 15. NDIR differential analyzer for NH_3 measurement

Four similar instruments are currently applied on oil-fired boilers of the Tokyo Electric Company at Yokosuka, but have not been tested on flue gas from coal or high SO_2 concentrations (>200 ppm). Also, the instrument appears to have the potential for NH_4HSO_4 deposition in the reference sample lines after the gases are cooled. The company representatives indicated that this problem could be averted through the use of a third converter which reduces SO_3 to SO_2 and that they have already developed such a converter.

Fuji Electric is interested in marketing the instrument in the US; however, servicing will be a problem unless it could be provided by their US representative, Fuji Electric Corporation of America, or another US firm which would contract with Fuji Electric to provide servicing. The costs for the instrument, with no service guarantee is $18K including the analyzer and $13K without it.

GADELIUS K.K.

Headquarters

Kobe

March 11, 1980

Fumichika Yoshikawa, Deputy Department Manager

Eiji Okamoto, Group Manager

Susumu Sakashita, Manager of Proposal Section

Y. Fukaya

Nils Hornmark, General Manager

David Mobley

Gary Jones

Doug Maxwell

Preceding page blank

GADELIUS K.K.

The air preheater engineering group of Gadelius is involved in a joint development program with EPDC to develop a specialized air preheater design for application downstream of SCR processes. It has been well established that air preheaters located after an SCR system are likely to experience plugging problems due to NH_4HSO_4 deposits. According to Gadelius, these deposits form in the middle, or intermediate temperature, portion of the air preheater where the temperature is $\leq$250°C and plug the interface between the intermediate and low temperature sections. They are difficult to remove by soot blowing since this technique is effective in cleaning only the elements adjacent to the soot blower. The NH_4HSO_4 is corrosive and reacts with the air preheater elements to form $NH_4FE(SO_4)_2$ and $NH_4Al(SO_4)_2$.

The company's program with EPDC began in 1976 with a small (10,000 Nm^3/hr), conventional Ljungstrom air preheater at EPDC's Takasago power station. Tests were conducted in which NH_3 was injected into flue gas with a full particulate load (12-20g/Nm^3). NH_3 was maintained at 50 ppm while SO_3 varied between 1 and 20 ppm. After 4000 hours of operation, the ΔP increased 40 percent over normal. Gadelius felt that one water washing per year would be sufficient to control this amount of plugging. Deposits were less than expected due to the abrasive effect of the ash.

Subsequently, testing began with a low dust gas (100 mg/Nm^3) from a hot-side ESP and NH_3 and SO_3 concentrations maintained at 10 and 20 ppm, respectively. With the conventional air preheater, a four element design designated DU/DU/DU/NF6, severe plugging occurred after 400 hours. A modified two element design, desigrated DU/NF3.5, was then substituted. In this design, a large (900 mm) hot section is used in conjunction with a large (1150 mm) cold section which is enameled. The modification is shown schematically in Figure 16.

Preceding page blank

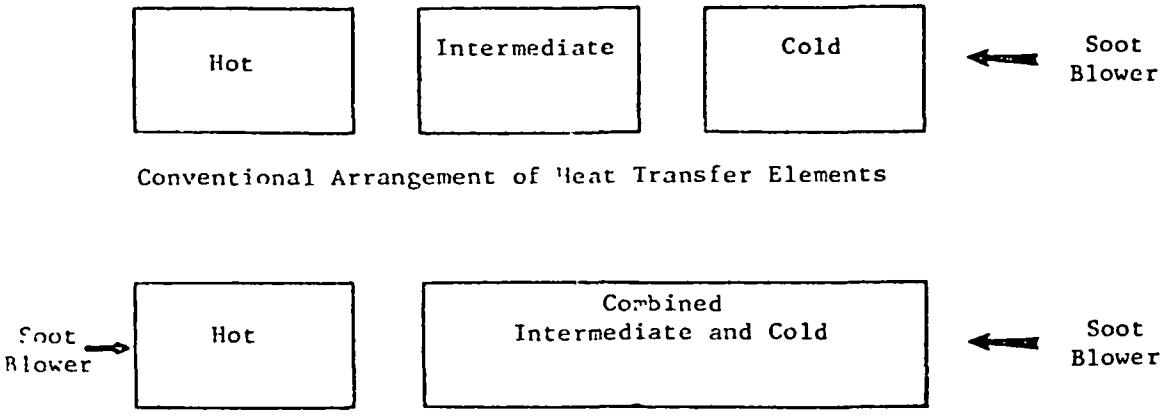

Figure 16. Comparison of conventional and modified air preheater designs.

A closer plate spacing was used on the enameled elements in order to maintain the same heat transfer as before. Also, the soot blowing technique was modified so that both sides of the air preheater were blown. Following these modifications the unit has been operating successfully for 1500 hours. Specific data are shown in Figure 17.

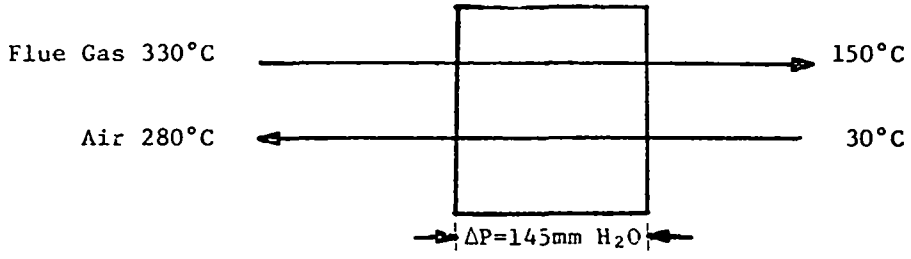

Figure 17. Operation of air preheater modififed for use with low dust load.

There are some other design modifications to this new air preheater. Corten steel, a corrosion resistant material, is used on the cold side. The frequency and pressure of soot blowing is increased to 1.5 tons/hour, six times per day on the cold side and one ton/hour, twice per day on the hot side. On a high dust application, Gadelius expects that soot blowing can be reduced to once per day.

With respect to water washing, Gadelius recommended that higher pressure water (7 to 10 kg/cm^3) be used and that once per year during a scheduled boiler outage would be sufficient. For a 500 MW unit with two air preheaters, a water usage of 2000 tons was estimated.

The capital costs of the modified air preheater are estimated at 1.5 times normal. Installation will also cost about 10 percent more. Operating costs for a low fly ash system will be about three times normal, due primarily to the increased steam usage. The life expectancy of the cold end for a low fly ash system may be reduced by about one-half of that for the situation without SCR, thereby increasing maintenance costs. Better results are expected for high fly ash applications.

A full-scale preheater has been ordered by EPDC for installation at their Takehara power station and should be operational in 1981.

HITACHI ZOSEN

Tokyo Office

Tokyo

March 19, 1980

Masao Kinoshita, President

Masuichi Yasuda, Managing Director

Hideya Inaba, General Manager

Shingo Tanaka

Masayoshi Ichiki

Mitsuo Takeda

Joji Saruwatari

David Mobley

Gary Jones

Doug Maxwell

Preceding page blank

HITACHI ZOSEN

Hitachi Zosen, in conjunction with their licensee Chemico Air Pollution Control Corporation, is operating a pilot scale (0.5 MW) SCR unit in the US and treating gas from a coal-fired boiler. The project is sponsored by the EPA and is located at Georgia Power Company's Plant Mitchell in Albany, Georgia. The discussions with Hitachi Zosen focused on tests being conducted at the power plant.

The pilot plant utilizes Hitachi Zosen's NOXNON 500 catalyst which consists of catalyst coated on a metallic substrate arranged in triangular honeycomb configuration. In March, the pilot plant experienced a decrease in catalyst activity which appears to be due to a combination of surface blinding by a fly ash and catalyst delamination by the soot blowing steam. In order to avoid the dust plugging problem, a new catalyst will be installed. This will be the NOXNON 600 catalyst which uses stainless steel gauze as the substrate rather than a metallic plate. The pitch of the new catalyst will be larger, 14mm and this is expected to eliminate the plugging problem.

Soot blowing of the catalyst occurs once per shift with steam and inspection of the catalyst element showed that the active material had been removed from the metal at the inlet face. It is suspected that the soot blowing steam has some condensate present which may promote abrasion at the inlet face. Future soot blowing will be done with air to avoid this problem.

Prior to this problem, the pilot unit experienced smooth operation during the test series. A set of operating data for two weeks in February is shown in Figure 18. As can be seen, NO_x removals are generally >90 percent and appear to be affected somewhat by flue gas temperature which varied between 327 to 382°C (620 to 720°F). Unreacted NH_3 in the outlet gas is consistently below 4 ppm.

Preceding page blank

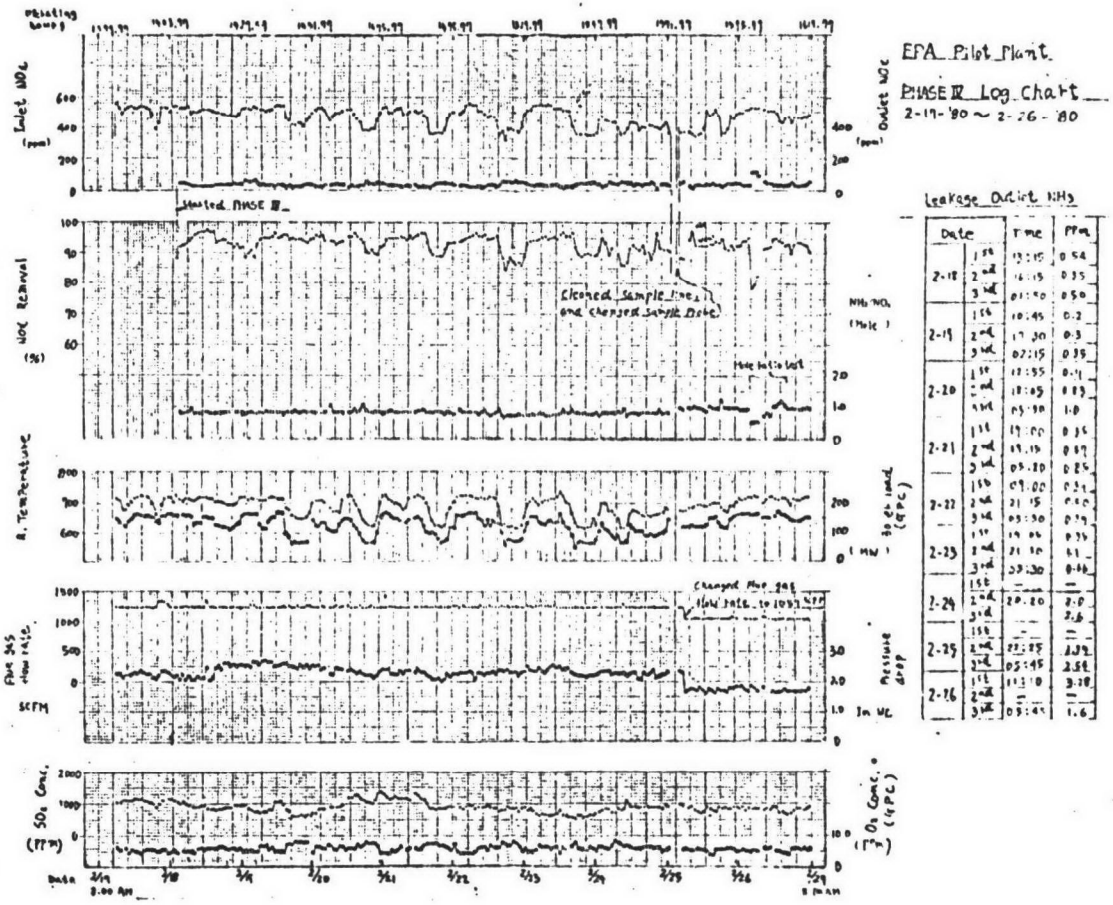

Figure 18. Test results of Hitachi Zosen Pilot Unit at Albany, Georgia.

The current plan is to install the new catalyst and complete the test plan. A continuous demonstration run will then begin and last for 3 to 6 months to show the stability of the process and to allow independent verification testing to be conducted.

The cost of the 600 series catalyst is anticipated to be about 20 percent less than that of the 500 series, after mass production is achieved. This translates to about ¥2.6 x $10^6/m^3$ ($10,612/$m^3$ or $300/$ft^3$).

To dispose of this catalyst it will be necessary to crush the catalyst and separate the metal and chemical components by acid treatment. Then, chemical treatment of the recovered catalyst will be necessary to remove the vanadium which can be recycled The costs associated with this disposal method have not been determined.

ISHIKAWAJIMA-HARIMA HEAVY INDUSTRIES

Toyo Office

Tokyo

March 25, 1980

Nobuo Aoki, Department Manager

Hidetaka Aoki, Mechanical Engineer

David Hobley

Gary Jones

Doug Maxwell

Preceding page blank

ISHIKAWAJIMA-HARIMA HEAVY INDUSTRIES

Ishikawajima-Harima Heavy Industries (IHI) is a major supplier of utility boilers in Japan and has developed SCR technology that can be applied to these boilers. They have supplied seven systems to utility boilers and have orders for eight more as shown in Table 16. All except one are oil-fired boilers. One application of particular interest will be to a 600 MW coal/heavy oil fired boiler at Joban Electric's Nakoso Power Station. This system will start up in 1983.

For both oil- and coal-fired applications, IHI recommends honeycomb shaped catalyst elements. Three catalyst manufacturers make the catalyst to IHI's specifications of chemical composition, dimensions and physical properties. The catalyst is manufactured in individual elements 150 mm × 150 mm on the face and up to 1000 in length. These are assembled by IHI into modules by using steel catalyst holders. An example of the steel holder is shown in Figure 19.

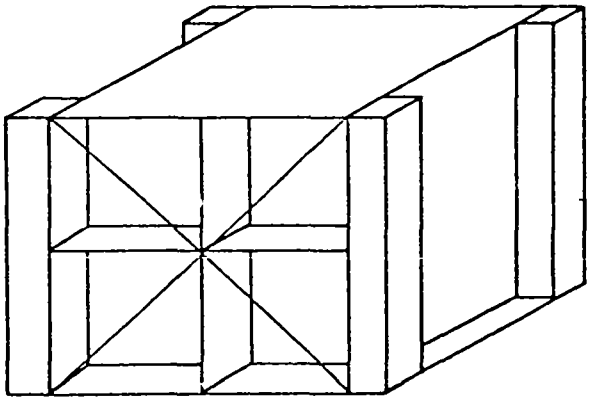

Figure 19. Example of IHI steel catalyst holder.

Preceding page blank

TABLE 16. SCR SYSTEM APPLICATIONS BY IHI (AS OF MID-1979)

No.	Deliver to	Fuel	Type	Capacity (Nm^3/hr)	Operation Commencement Time	Remarks
1	The Kawasaki Factory Ajinomoto Co., Ltd.	C heavy oil	Moving bed	180,000 (60 MWe)	Jan. 1978	
2	Utility Steam Generator	Low sulfur crude oil	Fixed bed	1,020,000 (350 MWe)	Apr. 1978	Combined with non-catalyst dentrification
3	Himeji No. 1 P/S No. 5 boiler, Kansai Electric Power Co.	Low sulfur heavy oil	Fixed bed	490,000 (156 MWe)	June 1978	
4	Kudamatsu P/S No. 2 boiler, Chugoku Electric Power Co.	Naphtha, NGL, Low sulfur heavy and crude oil	Fixed bed	1,050,000 (375 MWe)	Apr. 1979	
5	Kudamatsu P/S No. 3 boiler, Chugoku Electric Power Co.	"	Fixed bed	1,900,000 (700 MWe)	Sep. 1979	
6	Utility Steam Generator	Low Sulfur heavy and crude oil	Fixed bed	534,000 (156 MWe)	Feb. 1980	
7	Nishi Nagoya P/S No. 6 boiler, Chubu Electric Power Co.	Low sulfur heavy and crude oil, Naphtha	Fixed bed	1,316,400 (500 MWe)	June 1980	
8	Utility Steam Generator	Low sulfur heavy and crude oil, Naphtha, LNG	Fixed bed	1,700,970 (600 MWe)	Feb. 1981	

TABLE 16. SCR SYSTEM APPLICATIONS BY IHI (AS OF MID-1979)
(Continued)

9	Utility Steam Generator	Low sulfur heavy and crude oil	Fixed bed	534,000 (156 MWe)	Aug. 1981
10	Toyama Shinko P/S No. 2 boiler, Hokuriku Electric Power Co.	Low sulfur heavy and crude oil	Fixed bed	1,370,000 (500 MWe)	Nov. 1981
11	Higashi Niigata P/S No. 2 boiler, Tohoku Electric Power Co.	Low sulfur heavy and crude oil, LNG	Fixed bed	1,660,000 (600 MWe)	Dec. 1981
12	Utility Steam Generator	Low sulfur heavy and crude oil, Naphtha	Fixed bed	1,020,000 (375 MWe)	Mar. 1982
13	Utility Steam Generator	"	Fixed bed	1,020,000 (375 MWe)	May 1982
14	Utility Steam Generator	"	Fixed bed	1,020,000 (375 MWe)	Jul. 1982
15	Nakoso P/S No. 9 boiler, Joban Kyodo Thermal Power Co.	Coal and heavy oil	Fixed bed	1,700,000 (600 MWe)	Apr. 1983

The catalyst modules are lowered into the reactor with a hoist and stacked using structural steel within the reactor as support. As an example, the catalyst bed at Chugoku Electric's Kudamatsu Station is 12m x 12m, contains 144 modules, each weighing 1.5 tons. Five to eight minutes are necessary to replace each catalyst module.

Two shapes of reactors are used. For coal-fired application, a vertical downflow reactor as shown in Figure 20 is recommended to avoid particulate deposition. For oil-fired applications a horizontal flow reactor is recommended (Figure 21).

IHI has tested this process on coal-fired flue gas at EPDC's Isogo Power Station as part of a cooperative agreement. (See EPDC meeting report) Early in the testing air preheater pluggage was experienced; however, modifications to the elements and soot blowing procedure have alleviated this problem. IHI markets the Rothemühle, rotating duct air preheater and these are installed at Isogo. In full-scale applications to coal-fired units they feel that some water washing will be necessary.

IHI prefers the use of a cold-side ESP unless a hot-side ESP is necessary to prevent fly ash contamination by NH_3 deposition or for use with low sulfur coals. With a cold-side ESP, the full dust load will clean the air preheater and eliminate plugging problems.

In order to avoid problems with dust plugging the catalyst, honeycomb channels 30 percent larger than normal are used for coal-fired applications. There have been no problems with catalyst pluggage at Isogo where a hot-side ESP is used. Deposition of fine particulates on the catalyst has been experienced at other pilot plants. If a hot-side ESP is necessary, the reactor can be designed with a higher flue gas velocity since the erosive effects of large particles will not be a factor. The higher velocity may prevent adhesion of the small particulates.

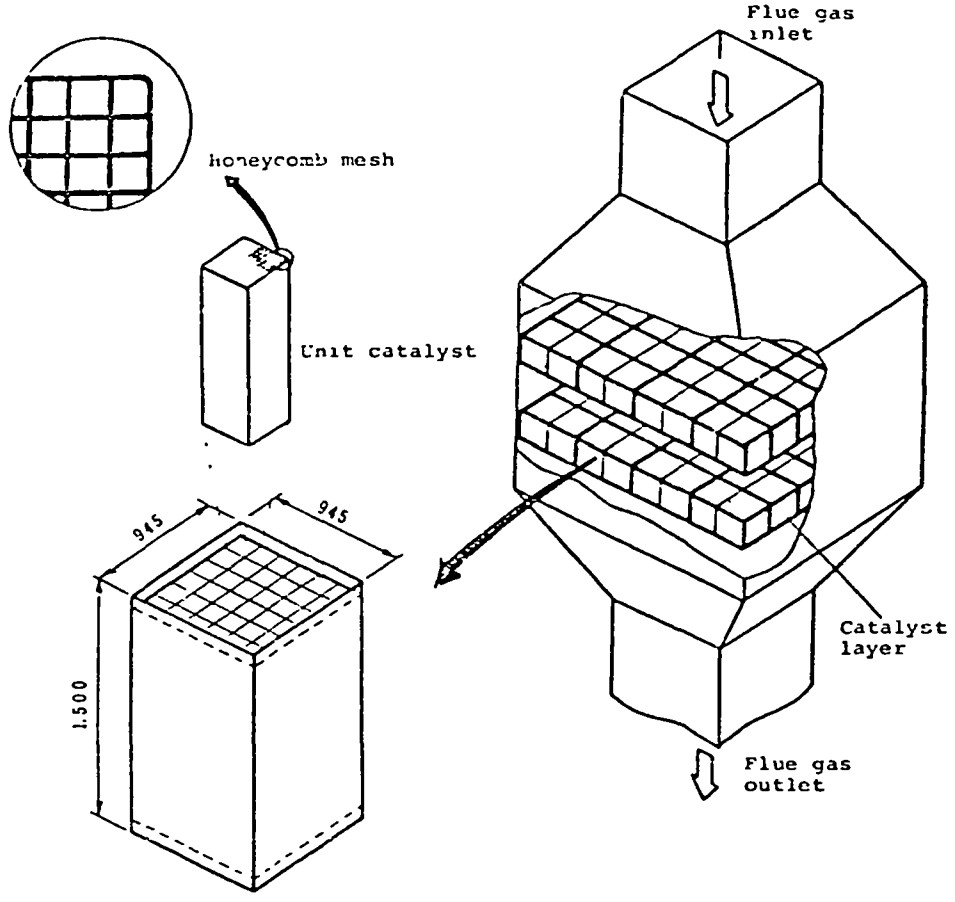

Figure 20. Fixed bed type reactor for coal-fired applications (vertical downflow).

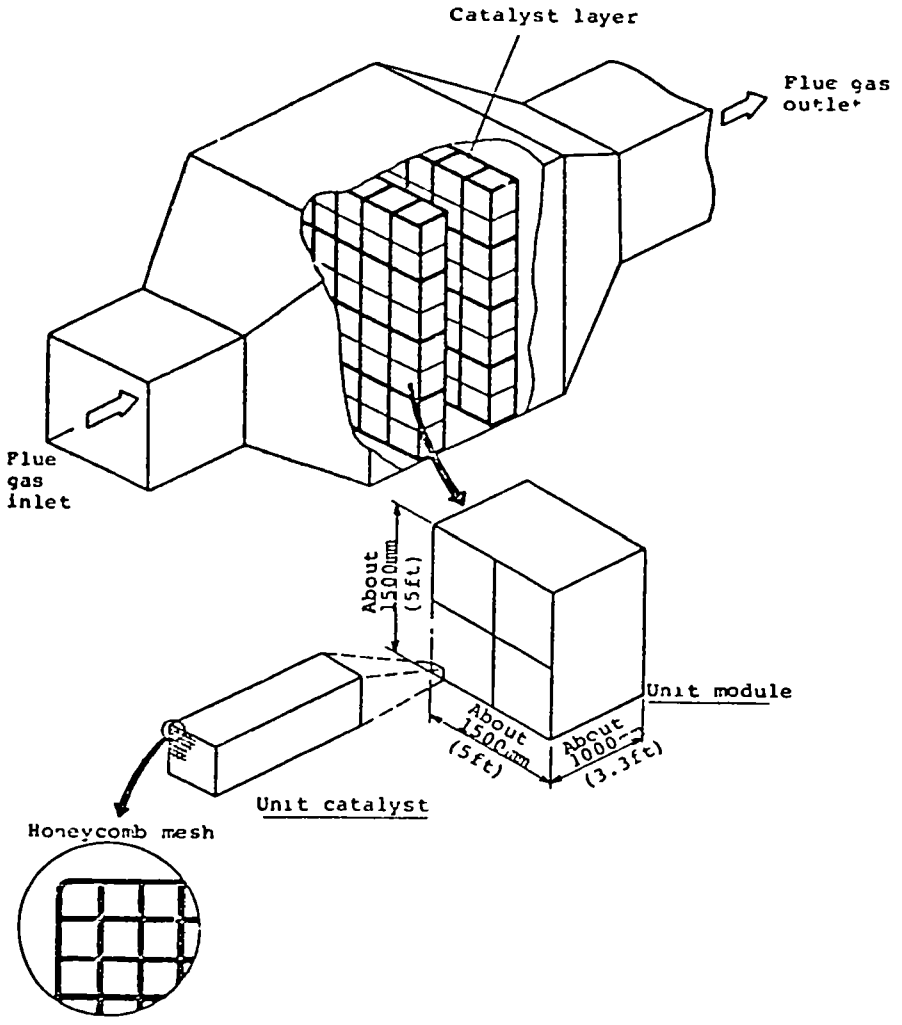

Figure 21. Fixed bed type reactor for oil-fired applications (horizontal gas flow).

Temperature control may be necessary to keep the flue gas temperature within the 300 to 400°C range. Higher temperatures, e.g., 450C, can be tolerated for short periods; however, extended periods at high temperatures can cause catalyst sintering. Temperature control on one IHI boiler will be accomplished by a split economizer as shown in Figure 22. During low load operation, gas flow will be biased through the smaller economizer section to maintain temperature. This is originally a Foster Wheeler design for other purposes that has been adapted by IHI for SCR temperature control. It is expected to add on the order of 10 percent to the cost of the new boiler.

IHI indicated that 90 percent NO_x control is possible, but difficult due to gas velocity and NO_x concentration gradients across the duct. These gradients make it difficult to control the NH_3:NO_x mole ratio at 1.0 at all points in the duct, especially on large units. As a result, it will be difficult for IHI to guarantee 90 percent NO_x removal and low NH_3 emissions (<10 ppm). Ninety (90) percent removal with unrestricted NH_3 emissions can be guaranteed; however, air preheater pluggage problems may be increased.

In terms of cost, a coal-fired application is expected to cost 50 percent more than an oil-fired application. A 90 percent NO_x removal system will cost about 20-25 percent more than 80 percent control; however, a 90 percent system with low NH_3 emission requirements will probably cost 40-50 percent more than an 80 percent NO_x control system.

The construction periods necessary for construction of SCR facilities are also of interest. Construction schedules for IHI SCR systems applied to the No. 2 and No.3 boilers at the Kudamatsu Power Station are shown in Figures 23 and 24. The first is a retrofit unit and the second is installed on a new boiler. As can be seen, the construction time required for the retrofit is about 10 months while seven months are required for the new unit.

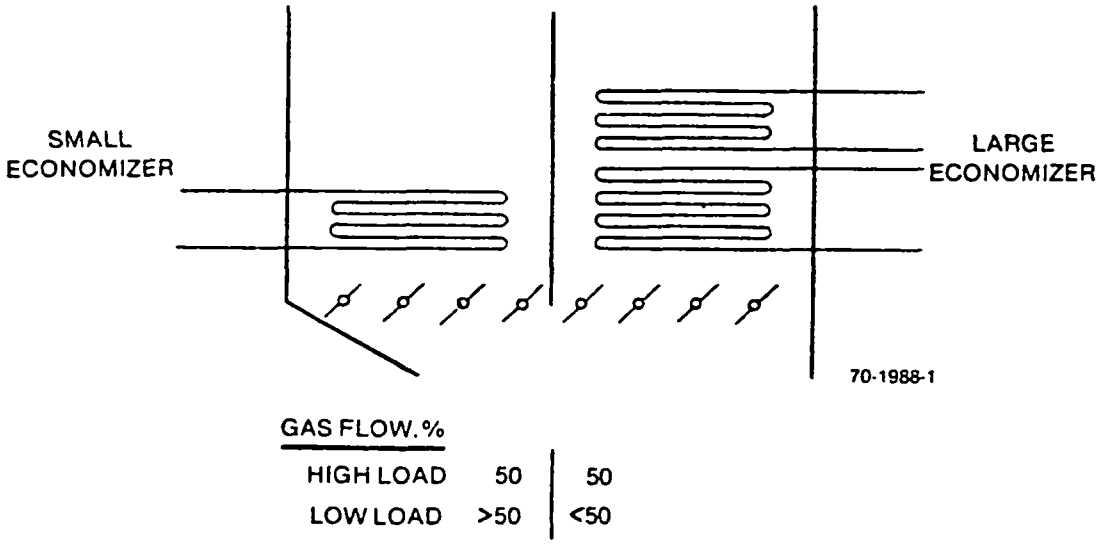

Figure 22. Split economizer arrangement for temperature control on IHI boiler.

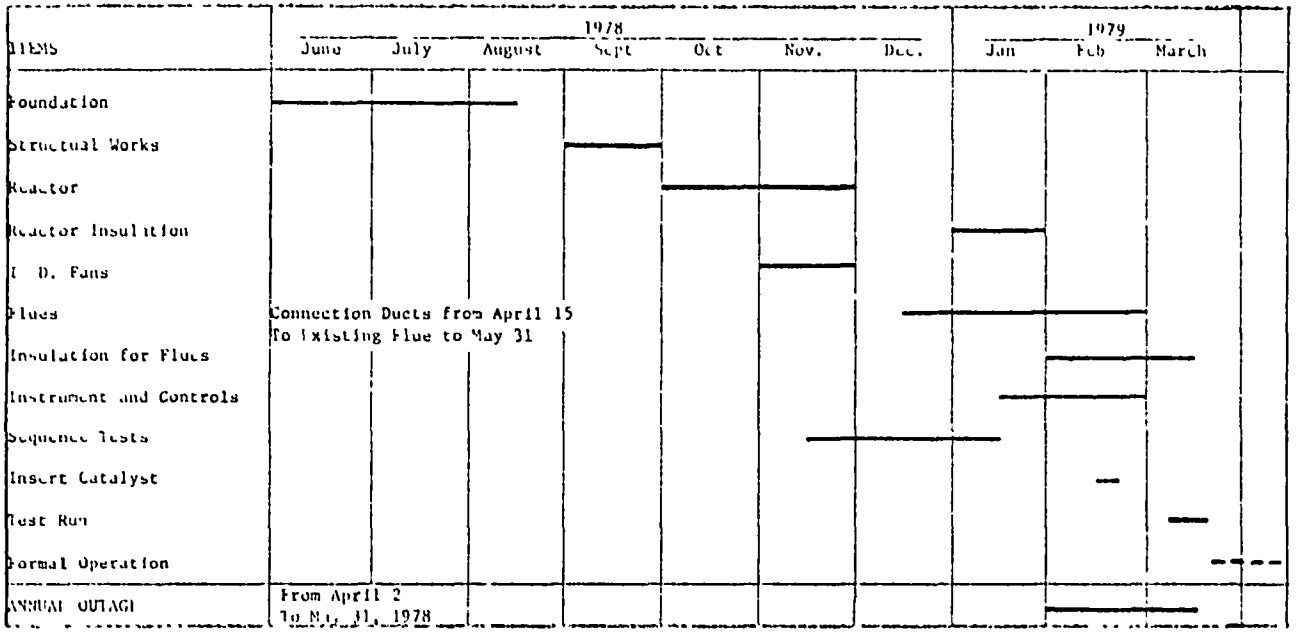

Figure 23. Construction schedule for Kudamatsu No. 2 de-NO_x Plant (Retrofit).

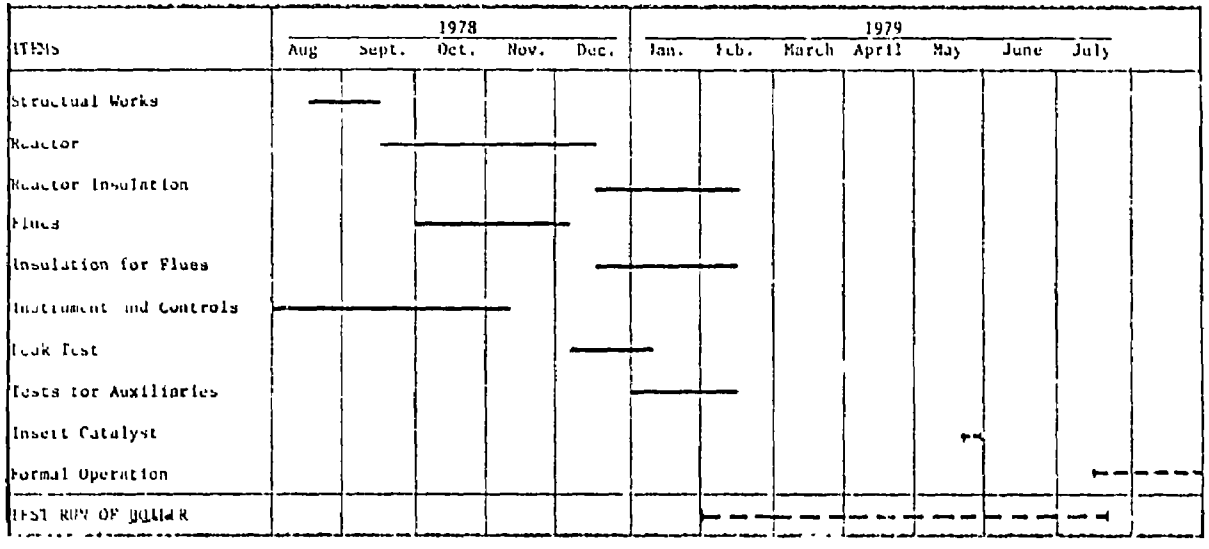

Figure 24. Construction schedule of Kudamatsu No. 3 de-NOx Plant (New Boiler).

JGC CORPORATION

Tokyo Office

Tokyo

March 25, 1980

Senji Takenaka, Senior Deputy Manager

Mitsuaki Shiba

Shuichi Ohno

David Mobley

Gary Jones

Doug Maxwell

JGC CORPORATION

JGC has been marketing a pellet-shaped catalyst and the parallel passage reactor (Paranox process) for NO_x control of ash-laden flue gas. They offer two catalysts, designated JP 102 (high temperature) and JP 501 (low temperature). The activity of each of these catalysts are shown in Figure 25. The high temperature catalyst is designed for flue gas temperature greater than 350°C and, therefore, is similar to other de-NO_x catalysts. The low temperature catalyst is designed to operate in the 200 to 300°C range with periodic thermal regenerations. At these lower temperatures, NH_4HSO_4 deposits on the catalyst and progressively lowers its activity as shown in Figure 26. The catalytic activity can be restored by heating to above 350°C. The frequency of regeneration depends on the SO_x concentration in the flue gas and the low temperature catalyst may not be suitable for boiler applications after the air preheater with high SO_x concentrations since the period between regenerations would be very short. For example, with 500 ppm of SO_x the optimal operating temperature is 230-250°C. The outlet temperature of the air preheater is only 150°C; however, upstream of the air preheater, the high temperature catalyst can be used. The low temperature catalyst has been tested on sintering furnace and coke oven gases and has been applied commercially to a coke oven. This application has a low sulfur concentration (50 ppm) requiring regeneration for 2 to 4 hours every five days.

The low temperature catalyst can be used from 350 to 400°C, but higher temperatures can be detrimental. For example, with the 501 catalyst at 380 to 390°C, SO_2 oxidation increases and at 430°C, sintering takes place.

The parallel passage reactor consists of vertical gas channels bounded by vertical catalyst beds. Two gas channels within a unit cell are described in Figure 27. The catalyst is retained in the unit cells by stainless steel gauze which also allows passage of gaseous components to the catalyst. A unit cell is 500 mm x 500 mm x 1 m and has a weight of about 250 kg. The catalyst can be changed by removing the covers on the catalyst

Preceding page blank

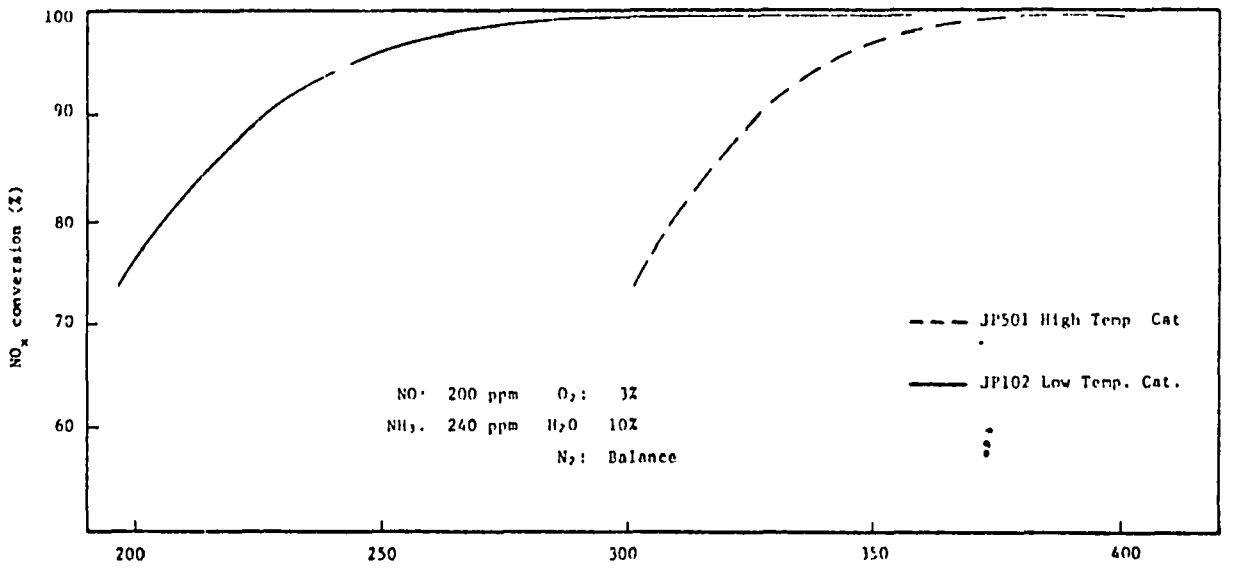

Figure 25. Activity comparison of high and low temperature catalysts by JGC.

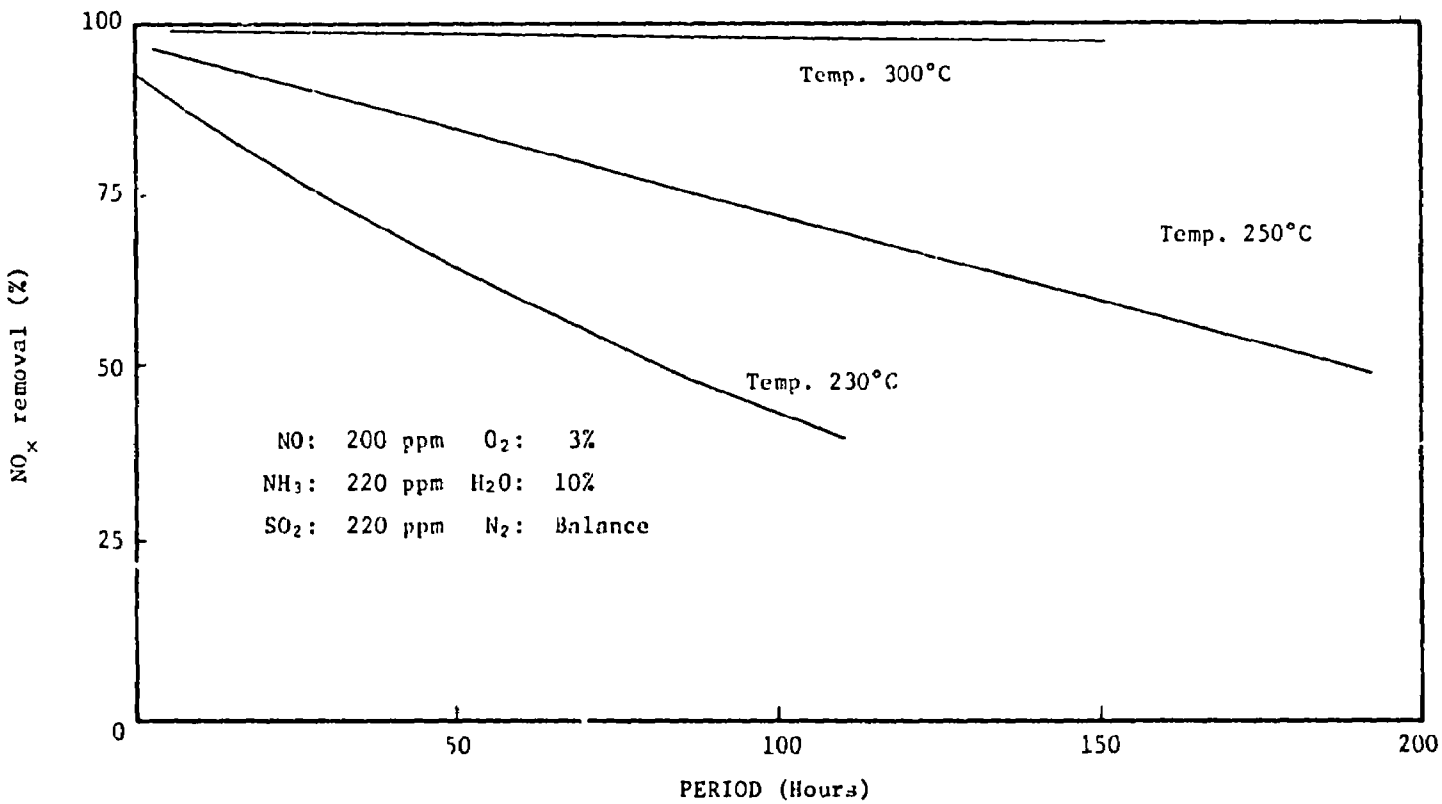

Figure 26. Activity of low temperature catalyst (JP 501) as a function of temperature

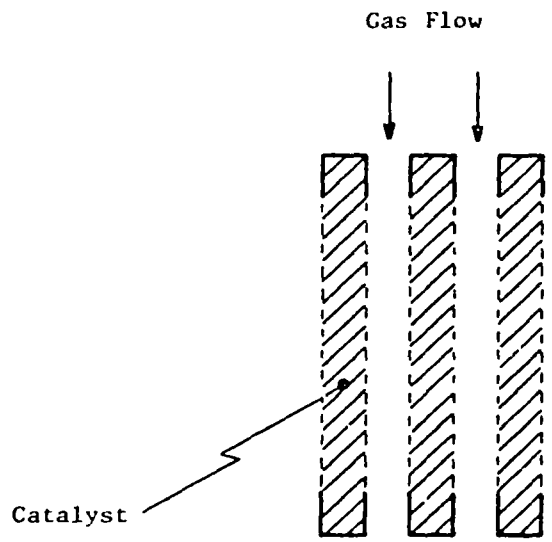

Figure 27. Arrangement of gas channels and catalyst in parallel passage reactor.

chambers. These covers are used to block the gas channels when fresh catalyst is loaded from the top and vibrated into the catalyst containers. This technology is owned by Shell. Studies by JGC have indicated that the investment cost of this arrangement for relatively clean gas is not competitive with other NO_x control systems and, JGC has added the honeycomb monolith to its product line. The monolithic catalyst technology belongs to JGC and is preferred to the parallel passage reactor for de-NO_x applications with gases with low particulate concentrations because it has lower catalyst and electrical costs. The vertical screens on the catalyst beds create a resistance to gas phase mass transfer that is higher than with the monolithic catalyst. Apparently, higher gas velocities are used to overcome this resistance with consequent increased electrical usage by the fan. Catalyst cost is also a factor and JGC indicated that the cost of the monolithic catalyst was about 10 percent lower. Prior to the de-NO_x catalyst and reactor combination, JGC marketed the Shell (SFGD) process for SO_x removal which utilizes the parallel passage reactor. NO_x can also be reduced simultaneously by addition of NH_3.

JGC has not marketed their monolithic catalyst for application to boilers since they do not sell boilers. In Japan, the boiler manufacturer also supplies the SCR system if one is necessary.

JAPAN SHELL TECHNOLOGY

Tokyo Office

Tokyo

March 10, 1980

K. H. Lang, Director/Manager, Technical Department

M. Miyauchi

David Mobley

Jumpei Ando

Gary Jones

Doug Maxwell

Preceding page blank

JAPAN SHELL TECHNOLOGY

Japan Shell Technology, which is associated with the JGC Corporation, markets the Shell Flue Gas Desulfurization (SFGD) process and the Paranox process. Shell was involved in the development of both the SFGD and the Paranox processes, and has installed the SFGD process at its Showa Yokkaichi Sekiyu (SYS) refinery.

The SFGD process utilizes a regenerable acceptor material to remove SO_2 from flue gas. The SO_2 is released in a concentrated stream when the acceptor is regenerated with H_2. NO_x can also be reduced simultaneously in the process by addition of NH_3 since the sulfated acceptor material acts as an NO_x reduction catalyst. It should be noted that the SFGD and the Paranox processes are completely different processes.

The SFGD acceptor material is a special alumina carrier impregnated with copper and consists of extrudates (approximately 1.5 mm in diameter by 4 mm in length). The acceptor (contained within individual cells) is loaded into the parallel passage reactor (a proprietary design). Catalyst loading involves careful inspection of the cell elements, filling the cells with catalyst and reassembling the unit cells. These steps require experienced supervision to prevent rough handling which could cause weld failure and catalyst attrition. A weld failure can allow the acceptor to migrate from within the cells.

A third batch of acceptor is being installed at the SYS refinery due to somewhat premature loss in activity of the second batch. Strict quality control is necessary when manufacturing the acceptor.

Currently, the only application of the SFGD as designed by Shell is at the SYS refinery on a boiler firing residual fuel oil. The fuel is from a Middle Eastern crude and contains approximately 2.5 percent sulfur and a moderate amount of vanadium. Early on, there were problems with fouling; however,

Preceding page blank

soot blowing has eliminated this. Soot blowing is performed every day on a sequential basis to each of the soot blowing jets in order to reduce the instantaneous steam demand. The steam requirement is about 2-3 tons of 18 atm. steam per day. At SYS, steam blowing is preferred to sand cleaning since the latter fouled the acceptor and was not as effective.

The SYS facility achieves 90 percent SO_2 and 50-60 percent NO_x removal which is sufficient to comply with local regulations. The NO_x removal could be improved if necessary. SO_2 is converted to elemental sulfur via the Claus/SCOT processes which together achieve 99.9 percent recovery, give a very pure product and no undesirable streams.

If both SO_2 and NO_x removal is the goal, it is theoretically beneficial to operate two separate reactors, one for each pollutant, rather than a single dual-purpose reactor, due to the fact that action that improves efficiency for one pollutant tends to lower the efficiency with respect to the other.

However, the SFGD process provides a potentially advantageous compromise that achieves simultaneous reduction of SO_2 and NO_x adequate for many applications.

The parallel passage reaction not only displays the advantage of a low pressure drop configuration in which fouling can be adequately controlled, but the relatively large amount of metal internals involved also provides for good heat transfer in the exothermic SO_2 acceptance reaction and during the regeneration cycle.

There are three commercial Paranox processes of JGC design at Kashima Oil, Fuji Oil and Nippon Steel. These plants, which control only NO_x and use the JGC catalyst, have experienced no problems. These plants, except Nippon Steel, are no longer operational since NO_x removal at these locations is no longer required. When they were in operation, the two

plants at the oil refineries achieved 90 to 96 percent NO_x removal. The unit at Nippon Steel is treating 200°C gas from a coke oven and removes 95 - 98 percent of the NO_x.

KAWASAKI HEAVY INDUSTRIES

Kobe Works

Kobe

March 11, 1980

Senji Niwa, Manager of Plant Engineering
S. Nireki, Plant Engineering Division

David Mobley
Gary Jones
Doug Maxwell

Preceding page blank

KAWASAKI HEAVY INDUSTRIES

Kawasaki Heavy Industries (KHI) has developed several catalyst shapes, but the primary ones are shown in Figure 28.

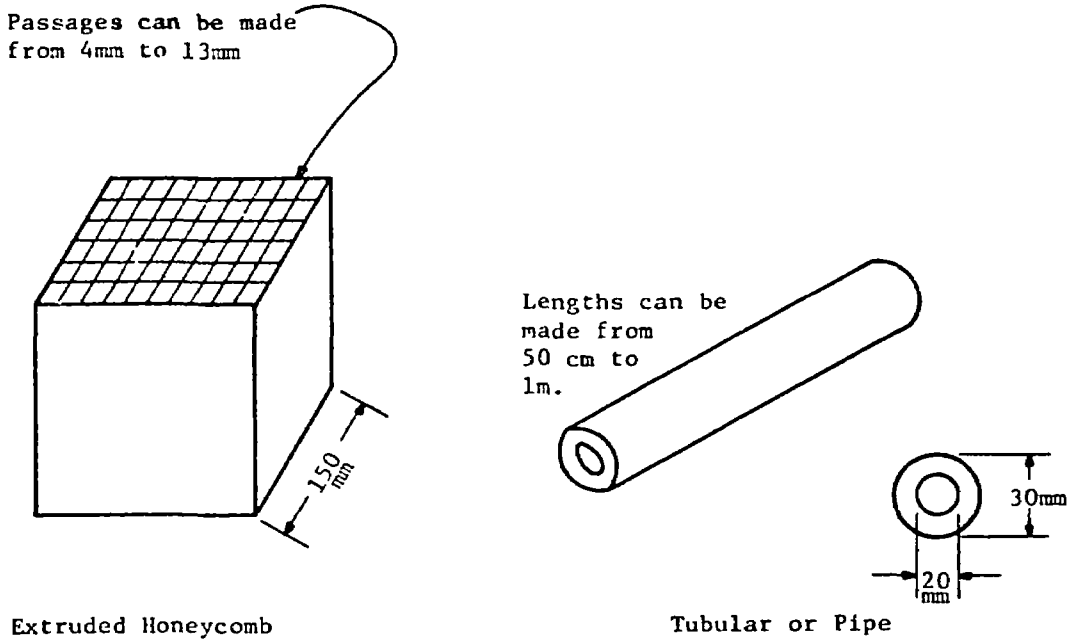

Figure 28. KHI catalyst types.

The honeycomb is recommended for oil-fired applications whereas the tube type is recommended for coal. With both types the catalyst is V_2O_5 on a TiO_2 carrier. Typical space velocity and specific area data are shown in Table 17.

TABLE 17. DESIGN DATA FOR KHI CATALYST TYPES

Catalyst Type	Specific Area (m^2/m^3)	Space Velocity* (hr^{-1})
Honeycomb	300	5000
Tube	170	3000

*80 percent removal

Preceding page blank

Catalyst volume for the honeycomb is defined as:

$$L \times H \times W \times N$$

N is the number of catalyst units. For the tube shape the volume is defined as:

$$(\text{outside diameter})^2 \times L \times N$$

Currently, KHI is developing a catalyst formulation that will minimize conversion of SO_2 to SO_3 in order to reduce formation of NH_4HSO_4 downstream of the reactor. Their effort has been successful, but NO_x removal efficiency is lower for the new formulation as shown in Table 18.

TABLE 18. EFFECT OF CATALYST FORMULATION ON NO_x REMOVAL (380°C, 90% NO_x Removal)

Catalyst Type	Conversion of SO_2 to SO_3 (% of inlet concentration)	Relative NO_x Removal for same Catalyst Volume
Normal	2-3	1.0
Low SO_2 Conversion	0.5	0.8

The KHI catalyst to be installed at the SCE Huntington Beach power plant, the EPRI pilot unit at the Arapahoe power plant and at the EPDC Takehara power station will be of a formulation intermediate to those shown in the table.

Catalyst deactivation has also been studied and KHI has found that potassium compounds such as KCl and K_2SO_4 will poison the catalyst.

It is necessary to keep the flue gas temperature in the range of 300 to 400°C to prevent damage. For gases that do not contain SO_2, this range can be extended to 250 to 450°C. Lower temperatures will allow deposits to form and activity to drop. Higher temperatures will damage the TiO_2 probably by causing sintering.

In application, the catalyst is manufactured into steel frame cases to allow quick stacking in the reactor and to hold it in place. Typically, a reactor consists of three to four stages with two to three layers of cases per stage as shown in Figure 29.

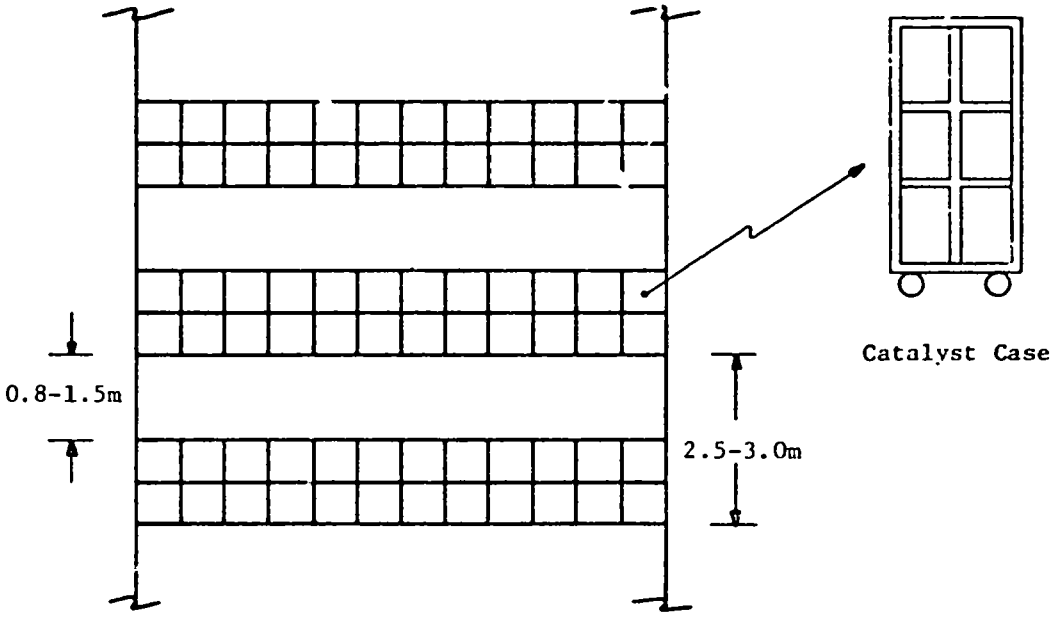

Figure 29. Arrangement of catalyst cases in reactor.

NH_3 emissions are a function of NH_3:NO_x mole ratio which is, in turn, a function of the desired NO_x removal as shown in Figure 30. KHI has observed NH_3 fuming in lab tests which simulated SCR and FGD units in series. The fuming occurred when NH_3 concentrations of 30 to 50ppm in a low dust gas entered the FGD section. They feel that NH_3 fuming is a potential problem with full scale units with low particulate concentrations in the flue gas. With particulate laden gases, they have observed no fuming.

Several NH_3 analysis techniques have been examined and the preferred method utilized a chemiluminescent NO_x analyzer. Two streams are analyzed;

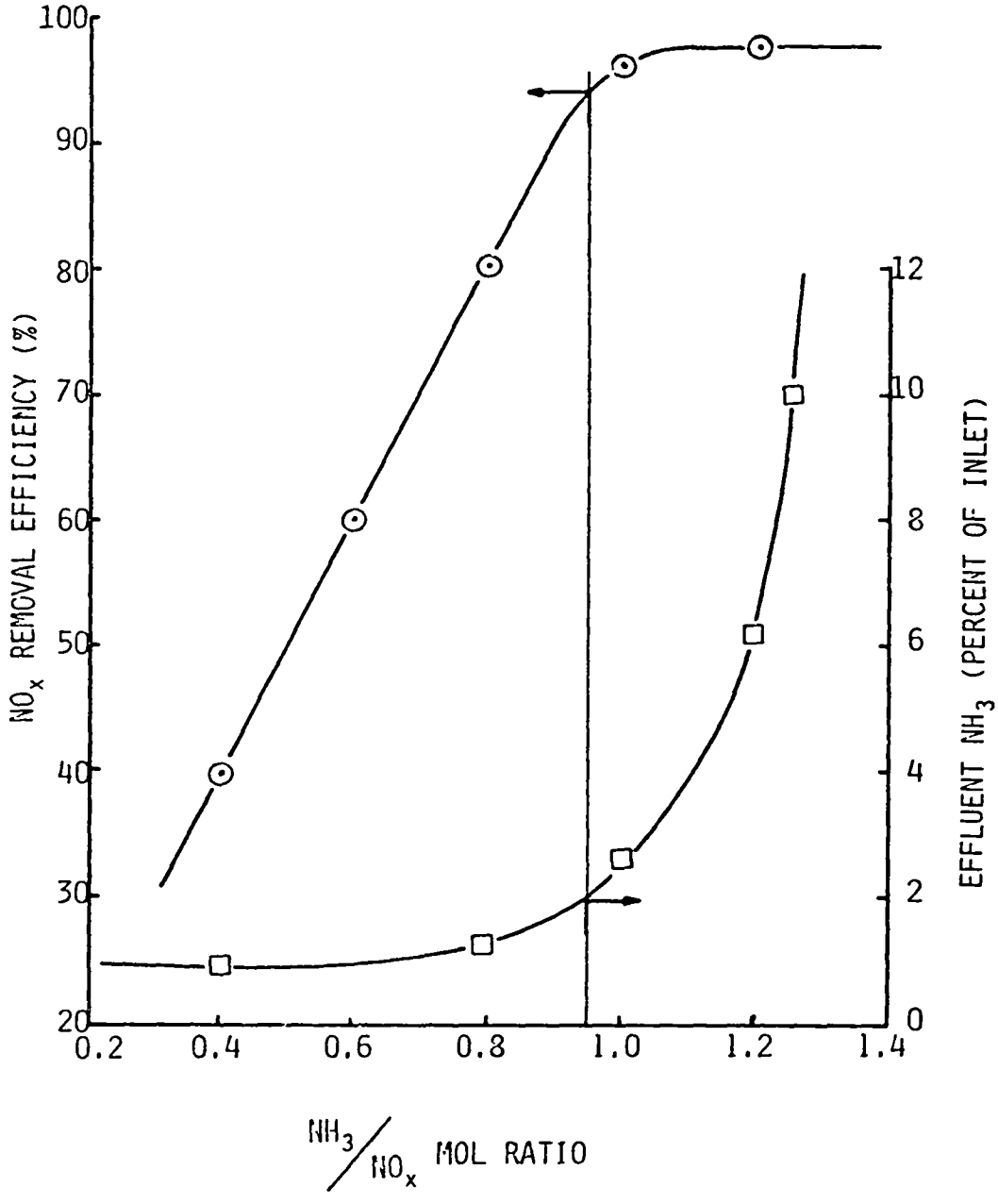

Figure 30. NO_x Removal Efficiency and Effluent NH_3 Vs. NH_3/NO_x Mol Ratio.

one in which the NH_3 is converted to NO_x by a converter containing stainless steel pellets and one with no NH_3 conversion. NH_3 concentration is determined by difference.

In terms of overall system arrangement, KHI prefers to have particulate removal downstream of the SCR reactor because the fly ash tends to keep the catalyst surface free of deposits. Erosion of the catalyst at the flue gas inlet was previously a significant problem, but this has been solved by either dipping the tips of these catalyst elements into a hardening solution or making a harder catalyst. The NO_x removal capability is not affected.

The process is controlled by using two signals: a feedforward signal of NO_x flow rate which is the product of gas flow (boiler load) and NO_x concentration, and a feedback NO_x removal signal calculated by measuring the outlet NO_x concentration. The feedforward signal is controlling the feedback signal is used as a trim on the primary control. Unstable operation occurs when only the feedback signal is used.

KHI either has supplied or has orders for seven SCR systems as shown in Table 19. There are two large units; one at EPDC's coal-fired boiler at Takehara and one at SCE's Huntington Beach Station in the US.

TABLE 19. SCR SYSTEMS SUPPLIED BY KHI

Client	Name of Plant	Fuel	Location	Capacity(Nm3/h)	Quantity	Type	Delivery Date
Kawasaki Heavy Industries, Ltd	Harima Works	LPG	Hyogo, Japan	7,400	1	Catalytic NO_x Removal System	February 1978
Tokyo Shibaura Electric Co., Ltd.	Yokohama Works	LNG	Kanagawa, Japan	12,900	1	ditto	March 1978
Hyogo Prefecture	Mukogawa Sewage Center	Heavy Oil	Hyogo, Japan	4,700	1	ditto	March 1978
Kawasaki Heavy Industries	Akashi Works	Heavy Oil	Hyogo, Japan	25,000	1	ditto	November 1978
Electric Power Research Institute	Arapahoe Generating Station	Coal	Denver, Colorado U S A	8,000	1	Catalytic NO_x Removal Pilot Test Module	September 1979
Electric Power Development Co	Takehara Power Station	Coal	Hiroshima, Japan	400,000	1	Catalytic NO_x Removal System	June 1981
Southern California Edison Co.	Huntington Beach Generating Station	Oil	Rosemead, California	345,000	1	ditto	September 1980

MITSUBISHI HEAVY INDUSTRIES

Hiroshima Research Station

Hiroshima

March 13, 1980

Masumi Atsukawa, Deputy General Manager

Yoshihiko Nishimoto, Asst. Chief Research Engineer

Toru Seto

David Mobley

Jumpei Ando

Gary Jones

Doug Maxwell

Power System Headquarters

Tokyo

March 26, 1980

Tamio Fujita, General Manager

Tadamasa Sengoku, Group Manager

Kiyomitsu Iwata, Project Group Manager

Atsushi Morii, Project Group Member

David Mobley

Jumpei Ando

Gary Jones

Doug Maxwell

MITSUBISHI HEAVY INDUSTRIES

Mitsubishi Heavy Industries (MHI) is actively developing selective catalytic reduction (SCR) technology and, as of March 1980, had 21 orders for NO_x removal plants including one for a coal-fired boiler (Figure 31). MHI anticipates more coal-fired applications in the future when boilers that were designed for coal use, but currently burn oil, switch back to coal.

For coal-fired applications in Japan there are two types of arrangements as shown in Figure 32. Each has advantages and disadvantages. In the Type "A" system, with a hot-side ESP, the main problem to overcome in deposition of NH_4HSO_4 on the air preheater elements and catalyst surface. In the Type "B" system, the particulates tend to clean the catalyst and preheater surfaces, but also tend to erode the catalyst. MHI uses erosion resistant catalyst and a dummy layer to prevent erosion in the Type "B" system.

MHI and catalyst manufactuers, under joint-development agreements, have developed many types of catalysts which meet various requirements for SCR applied to boilers with different fuels. The major features of catalysts are:

(1) Long life and less deterioration.

(2) High strength for temperature fluctuation for boilers.

(3) Erosion resistance.

(4) Less oxidation of SO_2 to SO_3.

MHI and catalyst manufacturers take care of the disposal of spent catalyst.

MHI prefers the V_2O_5/TiO_2 catalyst and will modify the concentration of other components and the manufacturing process based on the flue gas composition. The catalyst is guaranteed for one year, but a two or three year life is expected.

Preceding page blank

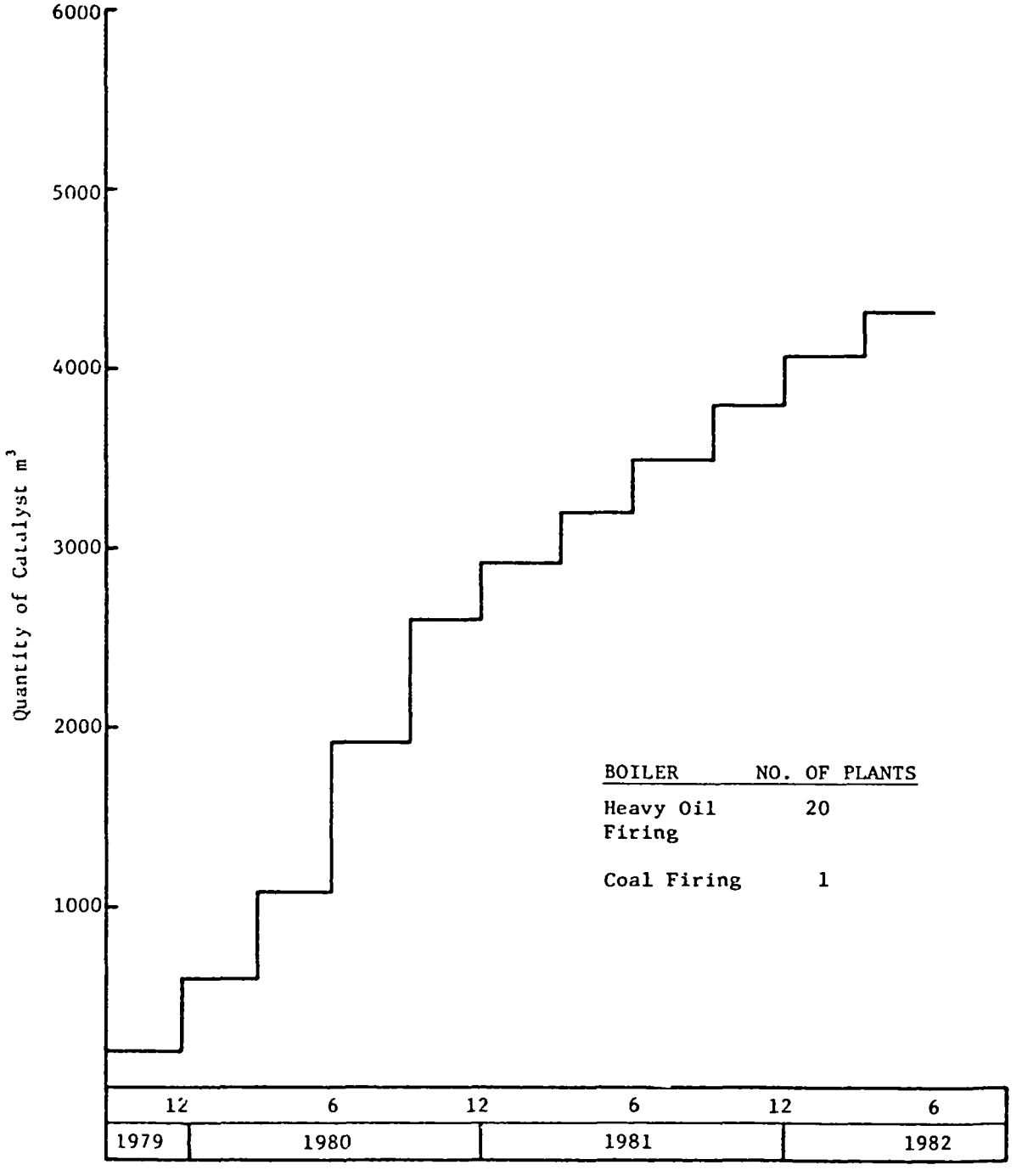

Figure 31. Status of orders received for MHI NO_x removal plants.

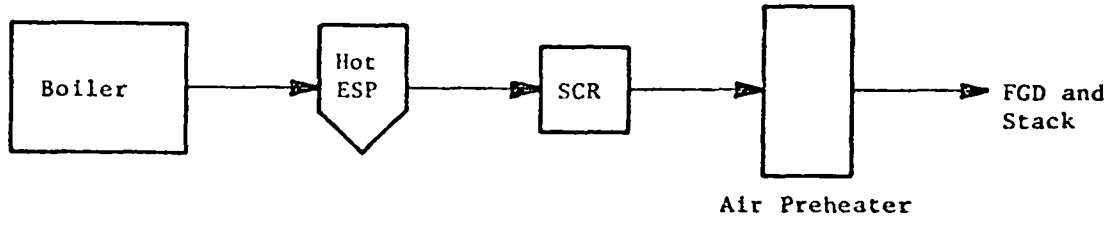

Arrangement "A"

Example: EPDC Takehara Power Station

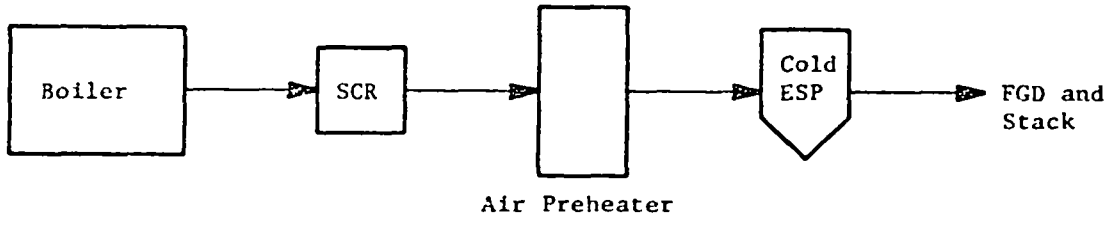

Arrangement "B"

Example: Chugoku Electric
Shimonoseki Power Station

Figure 32. Flue gas treatment alternatives for coal-fired boilers.

NO_x removal is adjusted by changing the NH_3:NO_x mole ratio as follows:

mole ratio	NO_x removal
0.61	60%
0.81	80%

At 80 percent removal, NH_3 in the outlet gas is <5 ppm. Both an ESP and an FGD unit will reduce NH_3 emissions below this amount if located downstream.

MHI has not found a suitable NH_3 analysis technique although several have been tested. A major analysis problem is obtaining a representative sample since there are concentration gradients in large ducts.

NH_3 that has deposited on the fly ash is removed from the collected ash by spraying with a small amount of water. The overall reaction is:

$$(NH_4)_2\ SO_4 + Ca(OH)_2 \longrightarrow CaSO_4 \cdot 2H_2O + 2NH_3$$

The liberated NH_3 is collected in a hood and sent to the stack.

The SCR system supplied by MHI for coal-fired applications is located at Chugoku Electric's Shimonoseki Power Station. Start up is scheduled for April 1980 and all of the flue gas from the 175 MW boiler will be treated. Initially, the NO_x removal will be only 50 percent which is sufficient to satisfy Chugoku Electric's agreements, however, the reactor will be sized for 80 percent removal. Design data for the plant are listed in Table 20.

Five stages of homogeneous catalyst will be installed. Each stage is approximately 2 meters in height and contain 0.65 meter^3 of catalyst. A dummy layer of catalyst is installed at the reactor entrance to prevent catalyst erosion. Experience has shown that only the entrance face of the catalyst suffers from erosion. Provisions are included to allow NO_x removal to be increased to 80 percent by increasing the catalyst bed height to 0.8 meter and the NH_3:NO_x mole ratio to 0.81.

TABLE 20. DESIGN DATA FOR MHI SCR SYSTEM AT SHIMONOSEKI POWER STATION

Item	Design Value
Flue gas flowrate	550,000 Nm^3/hr
Inlet temperature	370°C
Inlet NO_x	500ppm
NO_x removal	50%
$NH_3 \cdot NO_x$ mole ratio	<0.51
NH_3 emissions from reactor	<5ppm
Inlet SO_2	1600ppm
Reactor dimensions	11.8mW x 8.5mD x 13.3mH

Temperature control is achieved by an economizer bypass. At full load the flue gas temperature is 370°C, but at 25 percent load the temperature drops to 300°C. The minimum acceptable gas temperature is above 300°C, thereby necessitating the bypass for temperature control.

Soot blowers are installed at each stage as a precautionary measure. No new fan is necessary due to the FGD fan being overdesigned. The cost of the retrofit is approximatelv ¥$2x10^9$ ($\$8.2x10^6$) or \$47/kW including boiler modifications.

MHI has also been involved with Joban Electric, a cooperative of three power companies, on testing SCR applied to coal and coal/oil mix boilers. The tests are reported to be favorable and will be announced by Tokyo Electric in early 1980. (See meeting report with Tokyo Electric.)

NGK INSULATORS

Headquarters

Nagoya

March 17, 1980

Masavoshi Asai, General Manager

Takeshi Kawada, Assistant Manager

Takashi Uno

T. Fujimoto

K. Sawada

David Mobley

Jumpei Ando

Gary Jones

Doug Maxwell

Preceding page blank

NGK INSULATORS

NGK is one of four major catalyst manufacturers in Japan that supply NOx reduction catalysts to SCR process vendors. The catalyst is a coated honeycomb type using a ceramic substrate although NGK can produce homogeneous types.

Wall thickness of the coated type can be considerably thinner than that of homogeneous type. Therefore, coated type gives higher NO_x removal efficiency with lower pressure drop as shown in Figure 33. Catalyst material is crated on the substrate with a thickness of 0.15 mm.

Hexagonal, square and triangular channels are available in various channel sizes. Ceramic substrates are reportedly superior to metal substrate for several reasons including:

- low thermal expansivity
- high strength
- good catalyst substrate bond
- acid resistance

The difference in the coefficients of thermal expansion between the catalyst and the ceramic substrate are only 1. percent, whereas between the catalyst and metal substrate the difference is 150 percent. It is felt that, with the metal substrate, temperature cycling will cause catalyst exfoliation and aggravate catalyst erosion problems. The rough surface of the ceramic creates a good bond between catalyst and substrate which also inhibits catalyst exfoliation.

The hexagonal channel shape was common but the trend in Japan, which is supported by NGK, is towards the square channel shape because of its high strength. Examples of each type are shown in Figures 34 and 35.

Preceding page blank

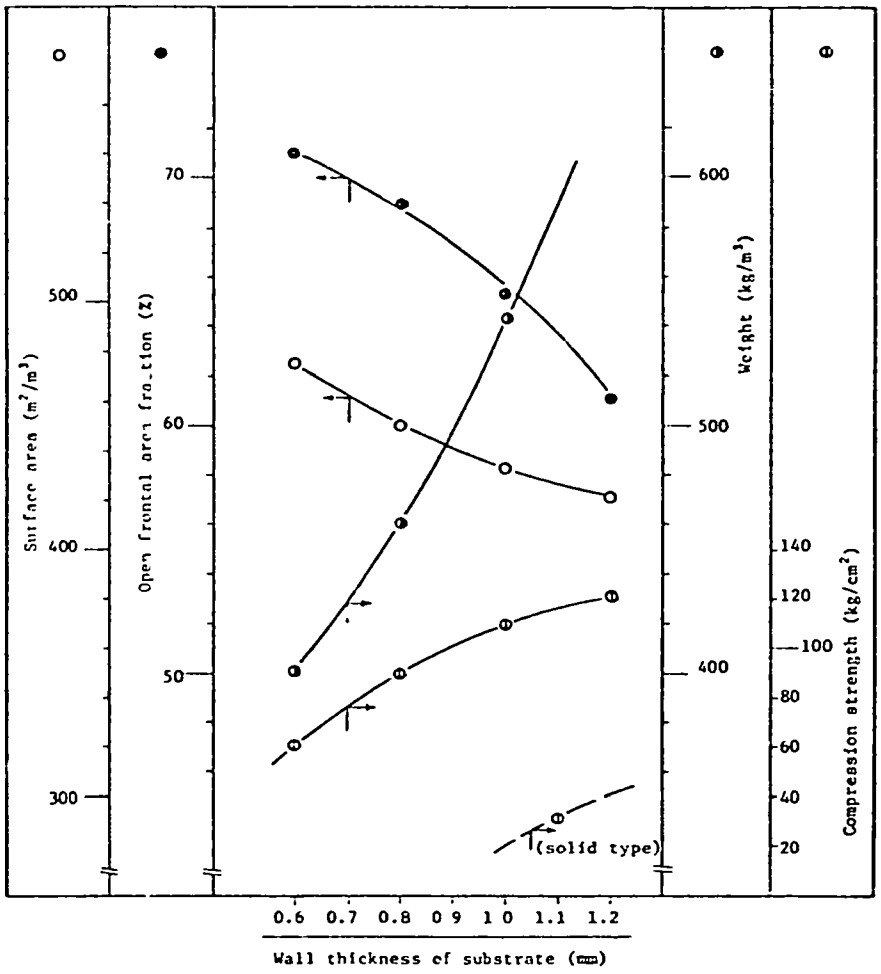

Figure 33. Characteristics of honeycomb substrate (coated type).

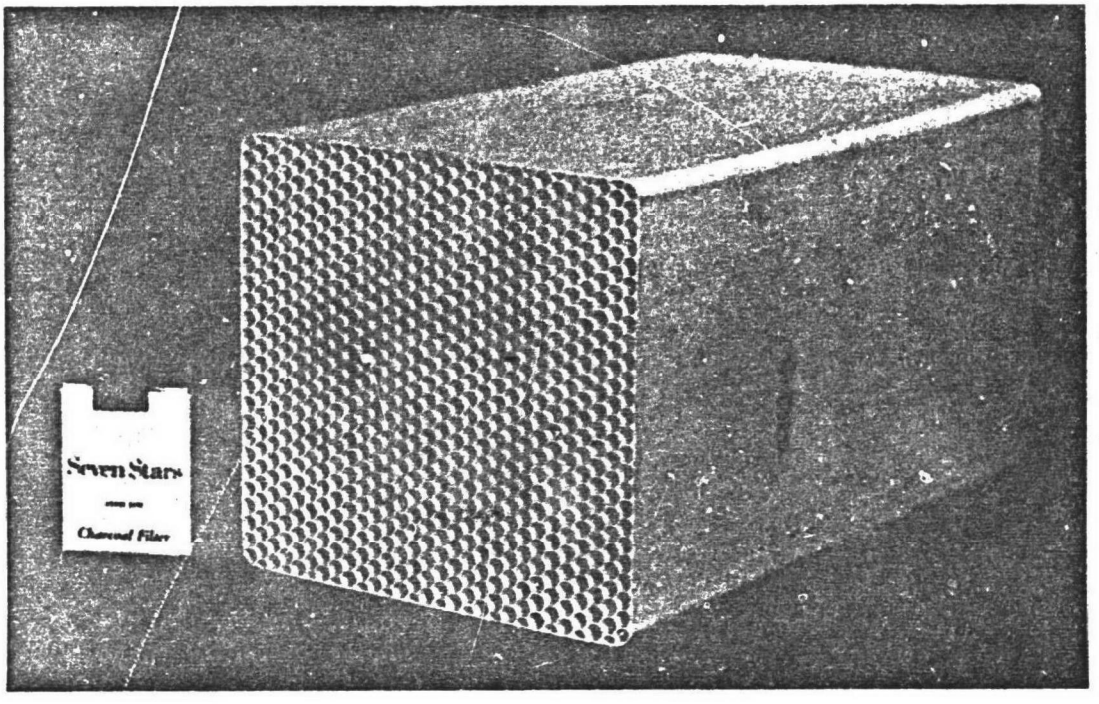

Figure 34. NGK hexagonal honeycomb catalyst substrate (200 mm square x 350 mm, 7 mm hydraulic diameter, 0.8 mm wall thickness).

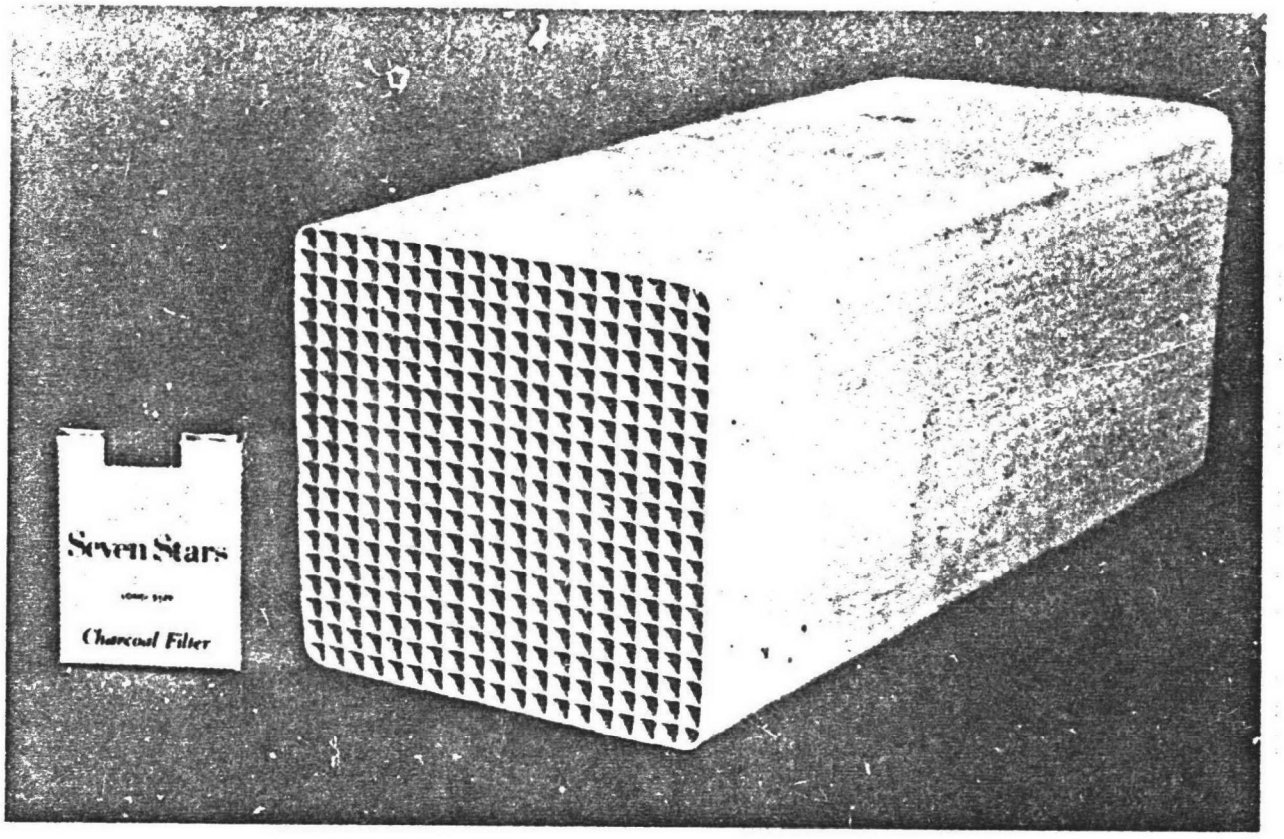

Figure 35. NGK square honeycomb catalyst substrate (150 mm square x 350 mm).

Table 21 shows the properties of the honeycomb in comparasion with those of a pellet.

TABLE 21. PROPERTIES OF NGK HONEYCOMB SUBSTRATE

Property	Unit	Wall to Wall Channel Width				Pellet Diameter
		7 mm Hexagonal	7 mm Square	10 mm Hexagonal	10 mm Square	7 mm
Specific Surface Area	m^2/m^3	437	469	277	364	543
Bulk Density	kg/m^3	480	425	630	320	800
Superficial Gas Velocity	m/g	8	8	8	8	1
Pressure Drop at Design Velocity	mm H_2O/m	48	37	45	22	350
Wall Thickness	mm	1	0.8	2	0.8	-

The ceramic material is mullite and the catalyst consists primarily of oxides of titanium and vanadium. A third component is added to suppress the SO_2 oxidation reaction. The reaction can be suppressed as much as desired, but at the expense of NO_x reduction efficiency. This suppression is necessary especially for high temperature gases in which a considerable fraction of the inlet SO_2 is converted to SO_3 as shown in Figure 36.

NGK has experienced some erosion of the catalyst at the inlet face and are currently improving this characteristic. They feel that ceramics are superior to metal substrates for the reasons mentioned previously. After this face-erosion, the ceramic substrate will remain and prevent further erosion. Continuous erosion of newly exposed catalyst can occur with homogeneous catalyst types.

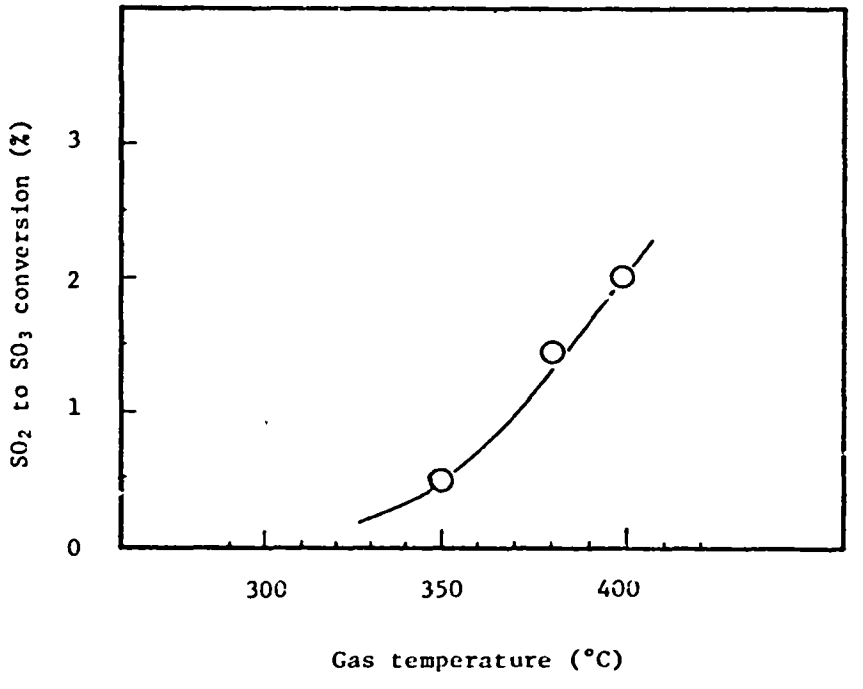

Figure 36. Conversion of SO_2 to SO_3 by catalyst as a function of gas temperature.

The catalyst appears to be capable of achieving >90 percent NO_x reduction at typical SCR operating conditions. Catalyst performance is shown in Figure 37 through 39. The first two figures also compare the performance of the honeycomb catalyst to that of a pellet type. NGK has not sold any of this catalyst for coal-fired applications, although they are conducting tests. There are two oil-fired applications; one is at Fuji Oil's refinery on an industrial boiler. The catalyst life guarantee depends on each application. In any case, NGK will guarantee the catalyst to the process vendor who will guarantee the catalyst to the user.

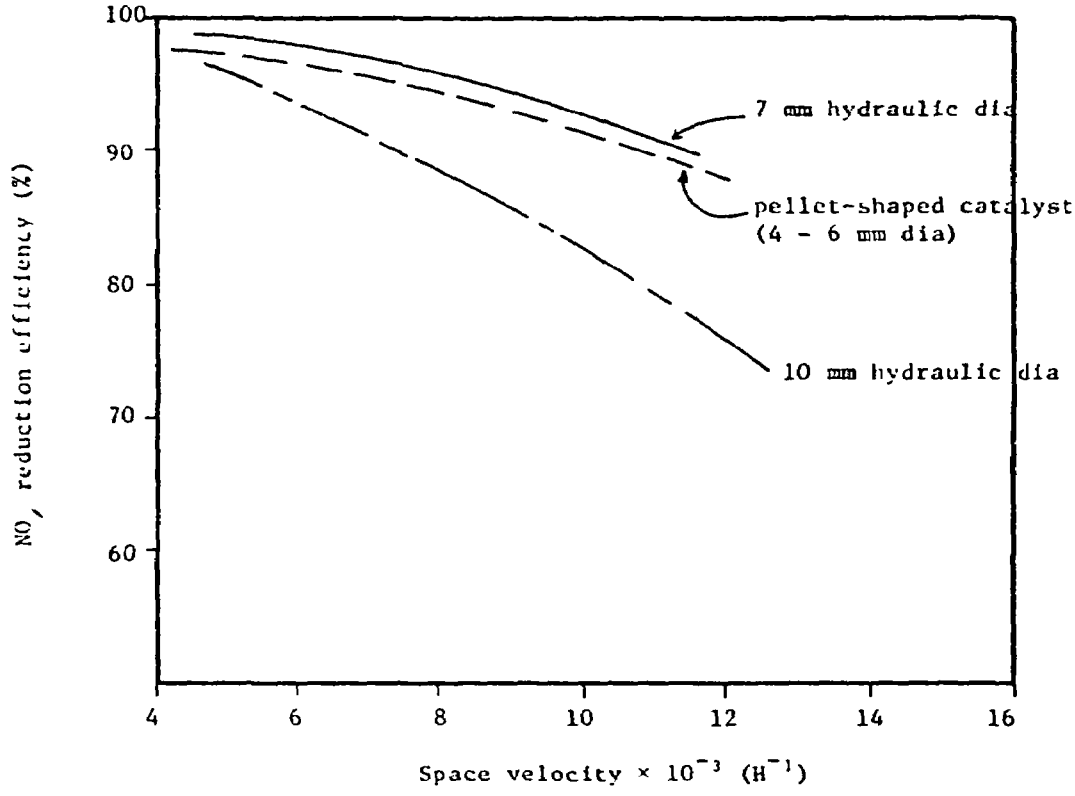

		NGK honeycomb-shaped catalyst	Pellet-shaped catalyst
Gas velocity (m/s)		7.0	0.6
Gas temperature (°C)		360	380
NH_3/NO_x (mol/mol)		1.0	1.0
Gas composition (ppm):	NO_x	100	150
	SO_2	200	80
	SO_3	8-10	3

Figure 37. Effect of space velocity on NO_x reduction efficiency. (Small scale tests)

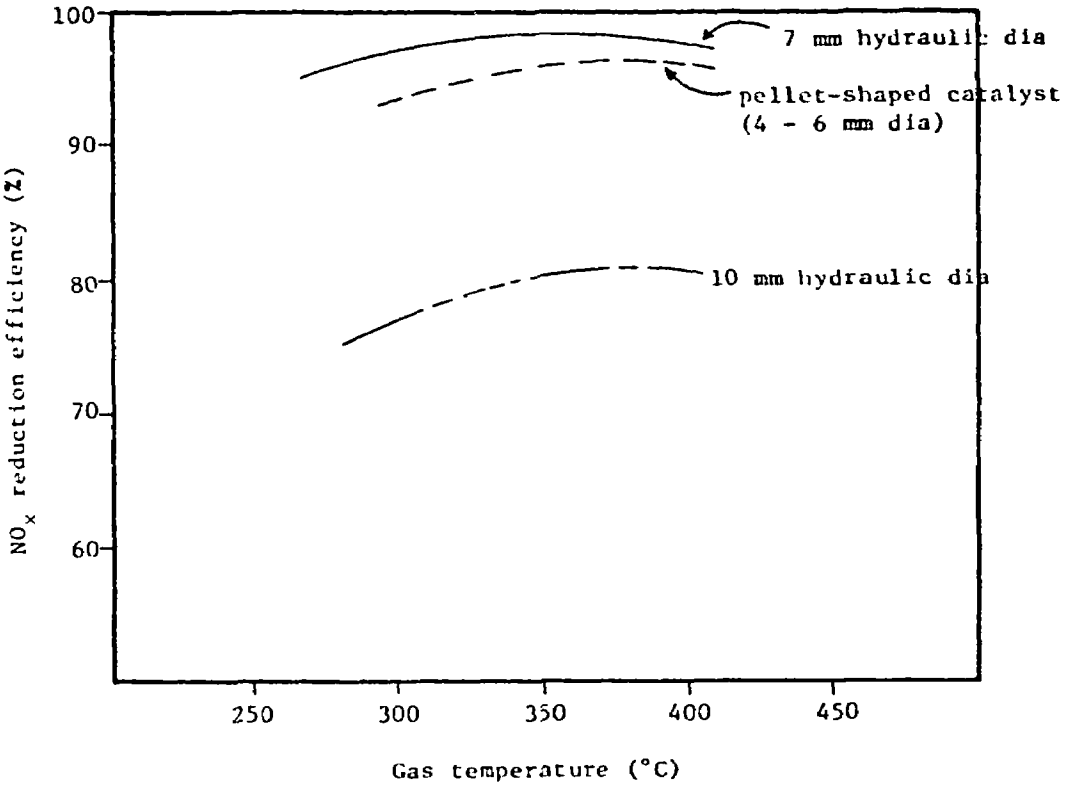

		NGK honeycomb-shaped catalyst	Pellet-shaped catalyst
Space velocity (hr^{-1})		6,000	6,000
Gas velocity (m/s)		7	0.6
NH_3/NO (mol/mol)		1.0	1.0
Gas composition (ppm):	NO_x	100	150
	SO_2	200	80
	SO_3	8-10	3

Figure 38. Effect of gas temperature on NO_x reduction efficiency. (Small scale tests)

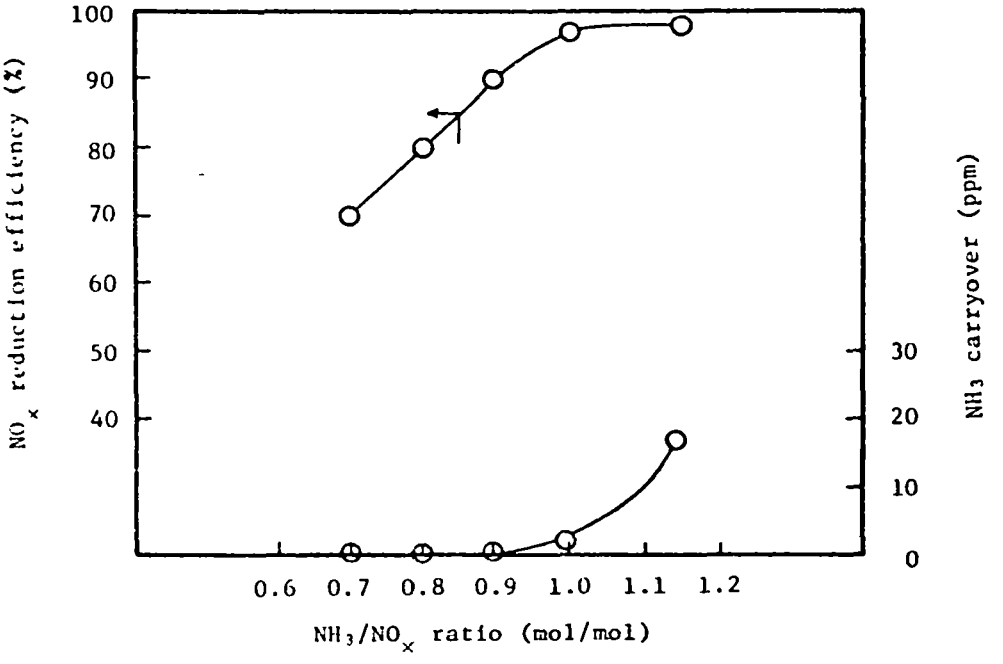

		NGK Honeycomb Catalyst
Hydraulic dia. of channels (mm)		7
Space velocity (hr^{-1})		6,500
Gas velocity (m/s)		6.8
Gas temperature (°C)		380
Gas composition: (ppm)	NO_x	100
	SO_2	200
	SO_3	8-10

Figure 39. Effect of NH_3/NO_x ratio on NO_x reduction efficiency and NH_3 carryover.

APPENDIX B

INSTALLATIONS WITH NO_x CONTROL SYSTEMS

CHUBU ELECTRIC

Chita Power Station

Chita, Aichi Prefecture

March 18, 1980

Suewo Takeuchi, Superintendent

Tomoaki Shinada, Assistant Superintendent

Mr. Tehira, Engineering Assistant

David Mobley

Jumpei Ando

Gary Jones

Doug Maxwell

Preceding page blank

CHUBU ELECTRIC

The Chita Power Station consists of six boilers of which three use SCR systems and one uses thermal de-NO_x. The boilers and associated data are shown in Table 22. NO_x control equipment is installed to meet the regulations of the local prefectural government and these are summarized in Table 23.

NO. 4 Boiler - SCR Unit

The SCR system on this boiler was supplied by MHI and began continuous operation in March 1980. Descriptive data on this unit are described in Table 24. The reactor and catalyst arrangement are shown in Figure 40. The catalyst is stacked in four stages with each stage consisting of two layers of catalyst packages which, in turn, consists of 50 catalyst elements.

The cost of this installation is 2.5×10^9¥ (10×10^6) which is relatively expensive. This is due primarily to the fact that it is a retrofit. Ductwork proved to be a significant cost item. The catalyst life guarantee is for one year and the power station is hoping for two.

No additional operators are required to operate the de-NO_x unit. Some labor is required to unload the periodic truck deliveries of NH_3 (Figure 41). When necessary, the catalyst will be changed by using a small hoist (Figure 42). This operation is expected to take a month or more and may require a 50 to 100 percent increase in the annual outage, which can range from 30 to 50 days.

No. 5 and 6 Boiler - SCR Unit

These units were supplied by Babcock-Hitachi and have been operated for two years. Descriptive data are shown in Table 25. The catalyst in each is arranged into four stages each 110 mm thick and 116.6 m^2 in surface area. In total, each boiler uses 125 tons or 95.4 m^3 of catalyst. The layout of a single reactor is shown in Figure 43.

Preceding page blank

TABLE 22. NO_x CONTROL AT CHITA POWER STATION - CHUBU ELECTRIC

Boiler	MW	Fuel	NO_x Controls	Outlet NO_x ppm (3% O_2)
1	375	Resid or Crude Oil	Combustion Modifications	$\leq$ 148
2	375	Resid or Crude Oil	Combustion Modificiatons, MHI Thermal de-NOx	< 106
3	500	Resid or Crude Oil	Combustion Modifications	$\leq$ 106
4	700	Resid or LNG	Combustion Modifications,	$\leq$ 21
5	700	LNG	Combustion Modifications, Babcock-Hitachi SCR	$\leq$ 11
6	700	LNG	Combustion Modifications, Babcock-Hitachi SCR	$\leq$ 11

TABLE 23. EMISSION LIMITATIONS AT CHITA POWER STATION

Item	Regulation	Compliance Technique
Water	COD $\leq$ 10 mg/l TSS $\leq$ 15 mg/l Oil $\leq$ 1 mg/l pH 5.8 - 8.6	• Chemical treatment • Rainwater to oil separator
NO_x	As shown in Table 22	• Combustion modifications (controlled mixing and OFA) • SCR with NH_3 • Thermal De-NO_x with NH_3
SO_2	-	• Low sulfur fuel
Ash	$\leq$ 20 mg/Nm^3	• ESP's on boilers 1, 2, 3 and 4
Noise	$\leq$ 50 phones	• walls around transformer • FD fan insulated • valves covered

TABLE 24. DESIGN DATA ON MHI SCR SYSTEM, #4 BOILER, CHITA POWER STATION

General	
Gas Volume	1,960,000 Nm^3/hr
NO_x Removal	80%
NO_x Inlet	100 ppm
NO_x Outlet	< 20 ppm
Reactor	
Temperature	388°C
NH	
NH_3: NO_x Mole Ratio	0.9
NH_3 Outlet	< 10 ppm
Catalyst	
Space Velocity	5430 hr^{-1}
Material	Transition Metal Oxide
Shape	Hexagonal Honeycomb
Pitch	8 mm
Manufacturer	NGK

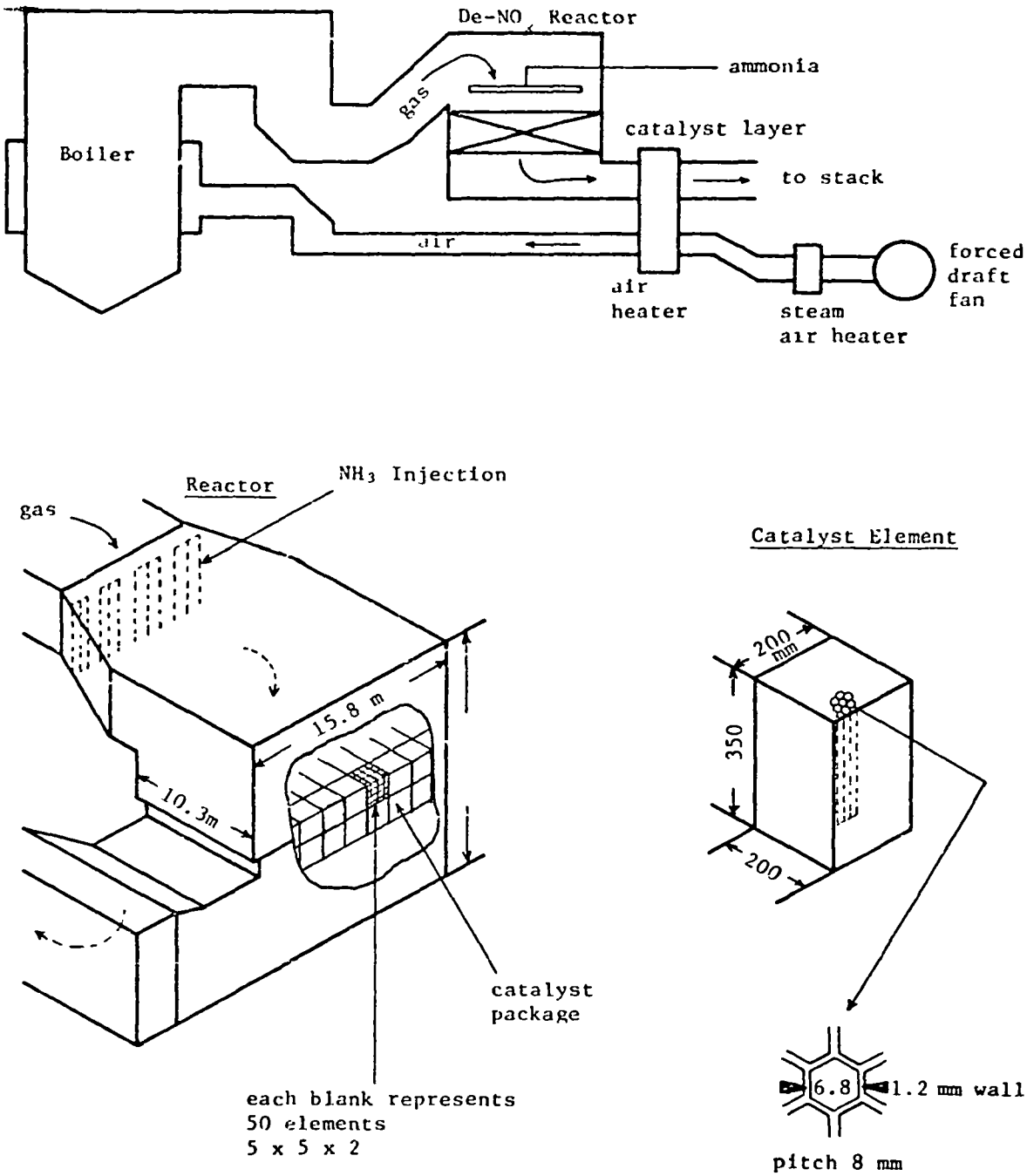

Figure 40. Catalyst and reactor arrangement on #4 boiler, Chita Power Station.

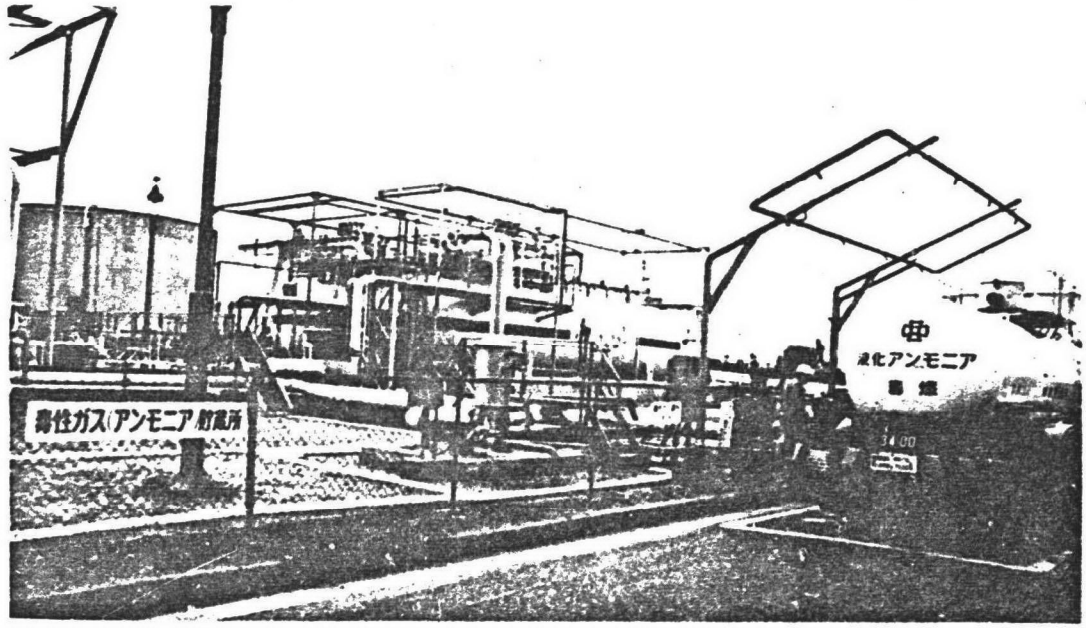

Figure 41. Truck delivery and unloading of ammonia.

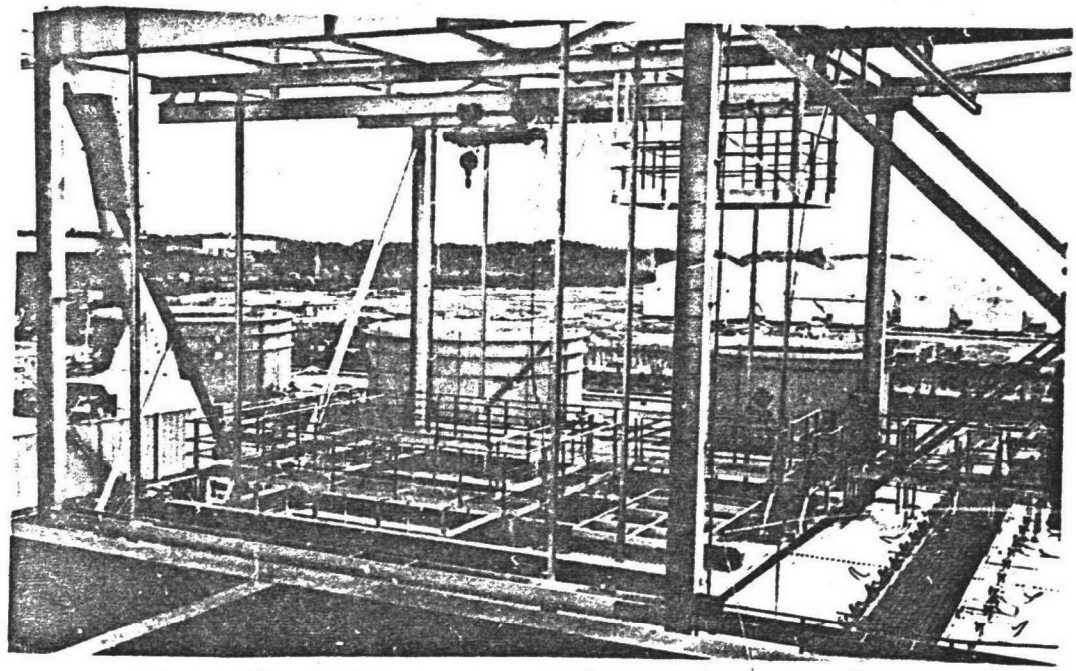

Figure 42. Hoist arrangement for catalyst changing.

TABLE 25. DATA SUMMARY ON BABCOCK-HITACHI SCR SYSTEM - #5 AND #6 BOILER, CHITA POWER STATION

Reactors per unit	2
Catalyst Type	Pellet
Catalyst Size	5 mm x 5 mm
$NH_3:NO_x$ Mole Ratio	0.9
NO_x Removal, design	80%
NO_x Inlet	30-40 ppm
NO_x Outlet	8-9 ppm
Catalyst Manufacturer	Hitachi

No. 2 Boiler - Thermal de-NOx Unit

This is an MHI supplied system which achieves about a 30 percent NOx reduction. A $NH_3:NO_x$ mole ratio of 1.0 is used and NH_3 breakthrough is maintained at <10 ppm by biasing the NH_3 flow rate through the various NH_3 injection nozzles. The nozzles are arranged in two banks with 8 and 7 nozzles, respectively. Flue gas temperature determines the NH_3 flow rate to each bank of nozzles. NOx gradients in the duct determine the hole spacing in the nozzle. This is checked and modified once per year. Total NH_3 flow rate is controlled based on the fuel flow rate. The dual injection grid arrangement was preferred to the alternative, H_2 injection, for safety and expense.

The cost of the total system was ¥660 x 10^6 ($2.64 x 10^6) which includes equipment, NH_3 storage and vaporization, and the license fee.

The station has experienced some problems with air preheater plugging, especially on the #2 boiler after the thermal de-NO_x. Addition of a hot-side soot blower did not help much and water washing is required once or twice a year. A water wash is initiated when the ΔP is $\geq$ 140 mm H_2O and about 200 tons of water are used per wash. No special wastewater treatment is performed.

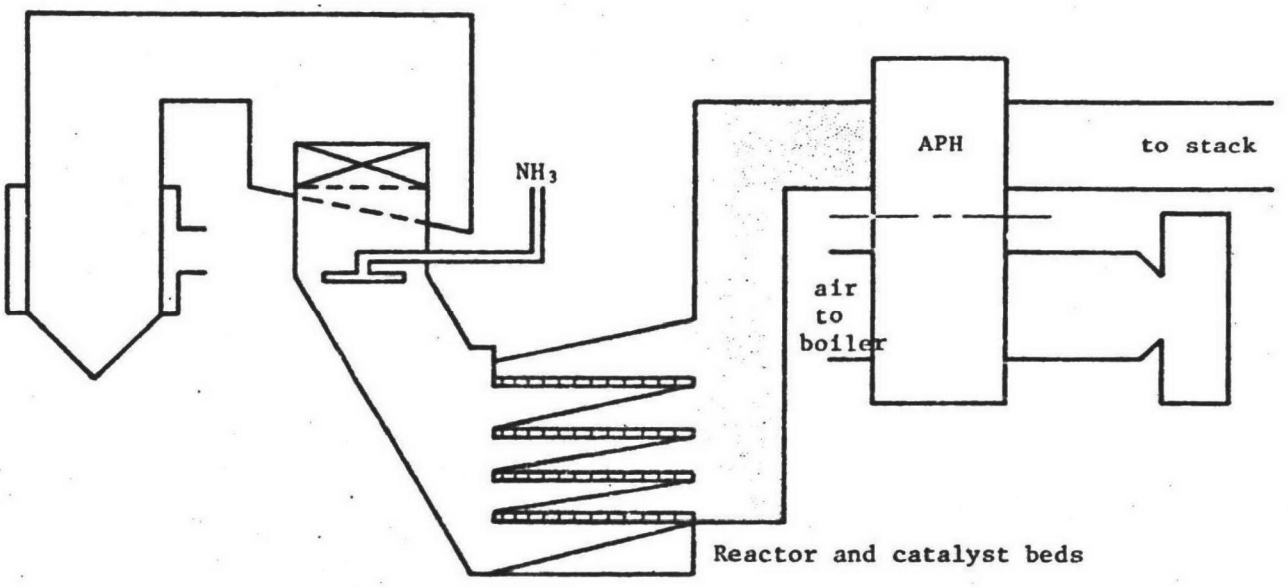

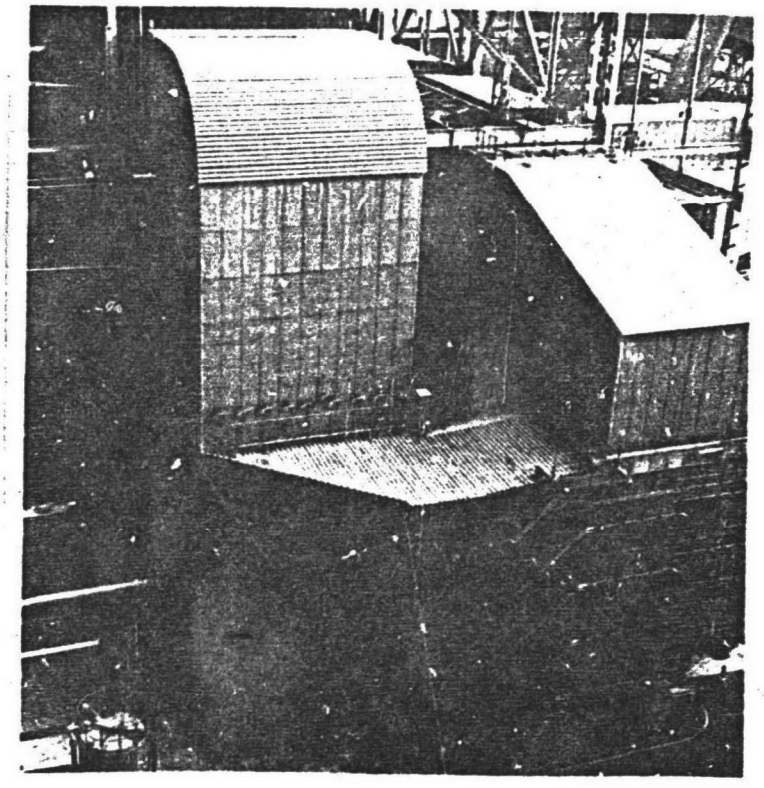

Figure 43. Layout of SCR reactor on #5 boiler, Chita Power Station.

CHUGOKU ELECTRIC

Kudamatsu Power Station

Okayama Prefecture

March 12, 1980

M. Kikkawa, General Manager

David Mobley

Jumpei Ando

Gary Jones

Doug Maxwell

Shimonoseki Power Station

Shimonoseki, Yamaguchi Prefecture

March 28, 1980

Takuro Kisse, General Manager

C. Yada, Vice Manager

S. Seo, Chief of Maintenance Division

Y. Izumo, Chief of Environment Division

David Mobley

Jumpei Ando

Gary Jones

Doug Maxwell

CHUGOKU ELECTRIC

At Chugoku Electric's Kudamatsu facility, the flue gas from boiler #2 (375 MW) and #3 (700 MW) is treated for NOx by SCR systems supplied by IHI. The plant has an agreement with the city to keep total NOx emissions below 154 Nm^3/hr. The de-NOx system on the #2 boiler is a retrofit that consists of a single reactor which reduces NOx from 160 ppm to <32 ppm. The #3 boiler included SCR in its initial design and consists of two parallel reactors which reduce the NOx from 130 ppm to <26 ppm. Both boilers are fired with low sulfur oil. The reactors are shown in Figure 44 while the NH_3 storage/vaporization system is shown in Figure 45.

The IHI de-NOx systems are guaranteed for 80 percent removal at an NH_3:NOx mole ratio of 0.90. Initially, the NOx removal was 85 percent, but recently this has been reduced to 82 percent by using a mole ratio of 0.85. The #2 unit has operated for one year with no degradation and the plant manager is expecting at least one more year before catalyst replacement is necessary. Pressure drop through the reactor is 50 to 60 mmH_2O.

There have been problems with air preheater pluggage by NH_4HSO_4. On the #2 boiler, the air preheater has required washing every two months and the air preheaters on the #3 boiler have also required washing. The Plant is trying to improve the soot blowing technique to minimize air preheater plugging. Normally the pressure drop is 100 mmH_2O, but washing is required when this increases to 300 mmH_2O. 5000 tons of water are required for one washing. Wash water containing the ammonium sulfates is stored and neutralized at a rate of 50 T/h and stored for reuse.

The flue gas conditions that lead to preheater plugging are <4 ppm NH_3, 4 ppm SO_3, and 100 to 110 ppm SO_2 at the outlet of the reactor. Gas exits the preheater at about 140°C. The deposits are experienced in the intermediate temperature zone.

Preceding page blank

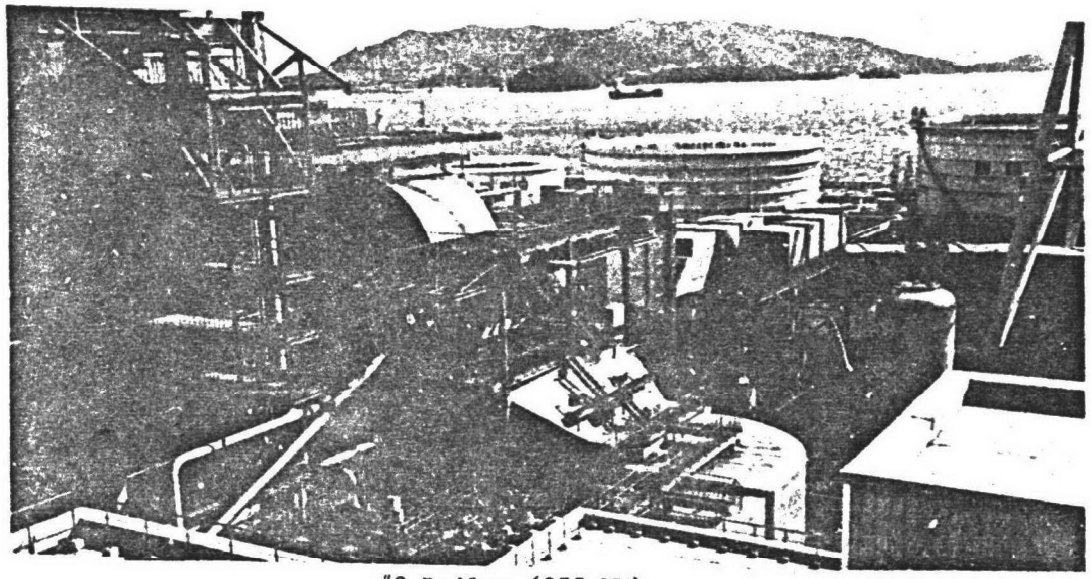

#2 Boiler (375 MW)

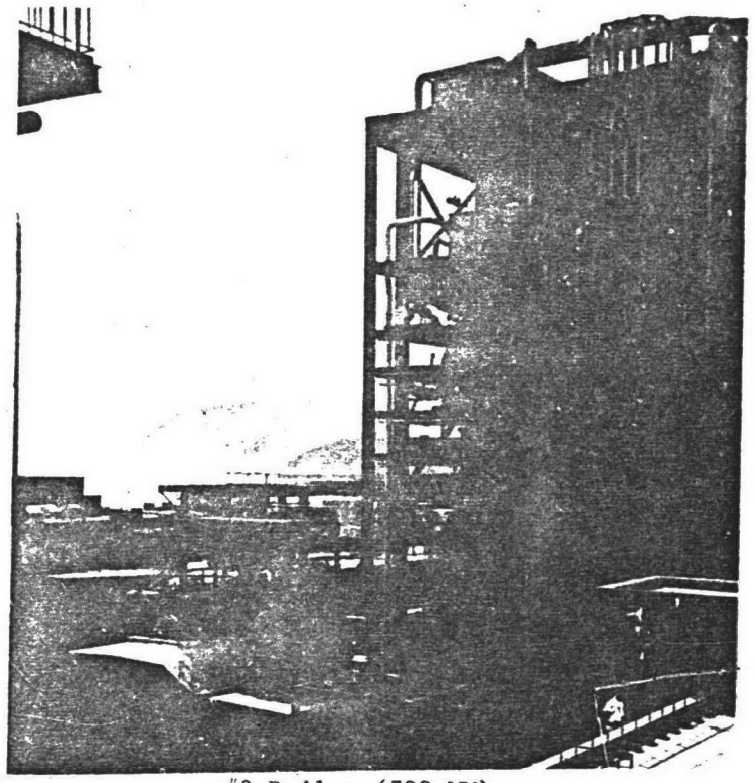

#3 Boiler (700 MW)

One of two SCR reactors

Figure 44. SCR reactors at Chugoku Electric, Kudamatsu Power Station.

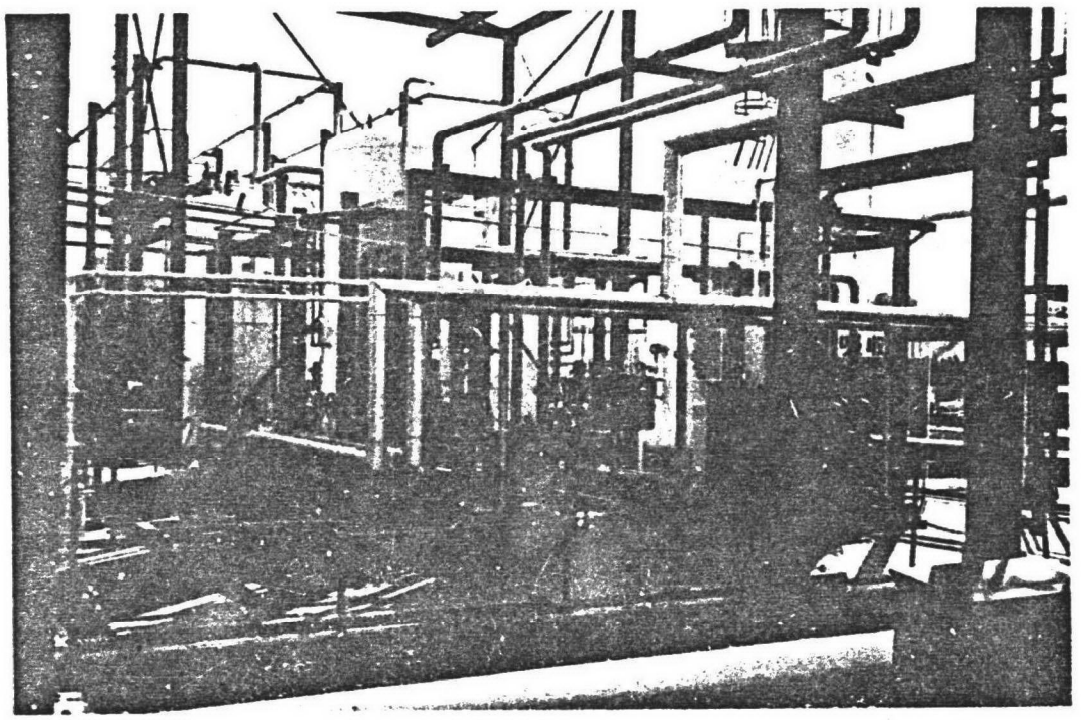

Figure 45. NH_3 Storage and Vaporization System at Chugoku Electric's Kudamatsu Power Station.

Currently, they soot blow with air, but plan to switch to steam in order to avoid blowing the hot-side with cold gas and potentially causing deposits to form on the hot end elements. The low temperature side is blown once per shift and the high temperature side once per day. A soot blowing cycle consists of blowing for two hours with 14 kg/cm^2 air. Previously, the high temperature side was blown only once per three days. Further improvements including going to higher diameter nozzles are planned in order to reduce required water washings to once every three months.

With SCR, NH_3 emissions are lower than previously when NH_3 was injected for ash conditioning. NH_3 in the reactor outlet is monitored continuously by a Shimadzu instrument which utilizes a chemiluminescence NO_x analyzer. A sample stream in which NH_3 has been oxidized to NO is compared to an unoxidized stream and the NH_3 concentration is calculated by difference.

The de-NO_x units are controlled by using the product of gas flow and NO_x concentration. Removal is used as a trim signal. There is no temperature control, but NH_3 injection is stopped if the temperature is <275°C. On the #3 boiler, this corresponds to about 1/3 load.

The capital costs of the SCR system applied to the #3 boiler are shown in Table 26 and the operating costs in Table 27. These costs translate to $14.3/kW and 1.84 mills /kWh assuming 70 percent power utilization. However, since the catalyst is expected to last much longer than one year, the actual operating costs will be less than these estimates. The capital cost of the SCR system on the #2 boiler was ¥$2.2x10^9$ ($9x10^6$) or about $24/kW. This system was more expensive since it required an ID fan and more complicated ductwork.

The labor requirements of the SCR systems are reported to be small. Station personnel indicated that no operational labor was required and, except for water washing the air preheater, no regular maintenance labor is necessary. Catalyst replacement is estimated to require six people for two weeks once every two years.

TABLE 26. CAPITAL COST BREAKDOWN OF SCR SYSTEM ON NO. 3 BOILER (700 MW) CHUGOKU ELECTRIC, KUDAMATSU POWER STATION

Component	Capital Cost ¥10^9	Capital Cost 10^6	Percent
Catalyst	1.1	4.5	44
Reactor	0.7	2.9	28
NH_3 System	0.24	0.98	10
Testing and Start Up	0.16	0.65	6
Other	0.30	1.2	12
TOTAL	2.5	10.2	100

TABLE 27. OPERATING COST BREAKDOWN OF SCR SYSTEM ON NO. 3 BOILER (700 MW) CHUGOKU ELECTRIC, KUDAMATSU POWER STATION

Component	Cost/Year ¥10^6	Cost/Year 10^6	Percent
Interest	250	1.02	13
Depreciation	321	1.28	16
Tax	35	0.14	2
Catalyst	1131	4.52	58
Power	83	0.34	4
NH_3	76	.30	4
Others	62	.25	3
TOTAL	1958	3.22	100

Basis: 7 years depreciation
10% interest
1 year catalyst life

Note: Japanese utility power company economics include the catalyst both in the investment cost, which is depreciated, and in the operating cost.

Chugoku Electric's Shimonoseki Power Station consists of a 175 MW coal/oil-fired boiler (No. 1) and a 400 MW oil-fired boiler (No. 2). The coal/oil-fired boiler will soon switch to 100 percent coal-firing. The coal-fired boiler has recently been fitted with a retrofit SCR system that was scheduled to begin operation in April 1980 and, as such, is the first commercial application of SCR technology to a coal-fired boiler. Some design data on the SCR system are shown in Table 28. Construction on the retrofit began in October 1979 and was essentially complete by the end of March 1980. The typical annual outage period of one month was extended to two months to allow connection of the modified ductwork to the boiler. When operational, the entire flue gas stream will be treated by an SCR reactor, an air preheater, a cold ESP and a limestone/gypsum FGD system, Figures 46 and 47. A plot view of the boiler and SCR system is shown in Figure 48.

TABLE 28. DESIGN DATA FOR THE MHI SCR SYSTEM INSTALLED AT THE SHIMONOSEKI POWER STATION

Item	Design Value
Flue gas flow rate	550,000 Nm^3/hr
Inlet temperature	370°C
Inlet NO_x	500 ppm
NO_x removal	50% (Reactor sized for 80%)
NH_3 NO_x mole ratio	<0.52
NH_3 emissions from reactor	<5 ppm
Inlet SO_2	1600 ppm
Inlet SO_3	20-23 ppm
SO_2 oxidation by SCR catalyst	<1.0%
Reactor dimensions	11.8m W × 8.5m D × 13.3m H
Space velocity	3000 h^{-1}

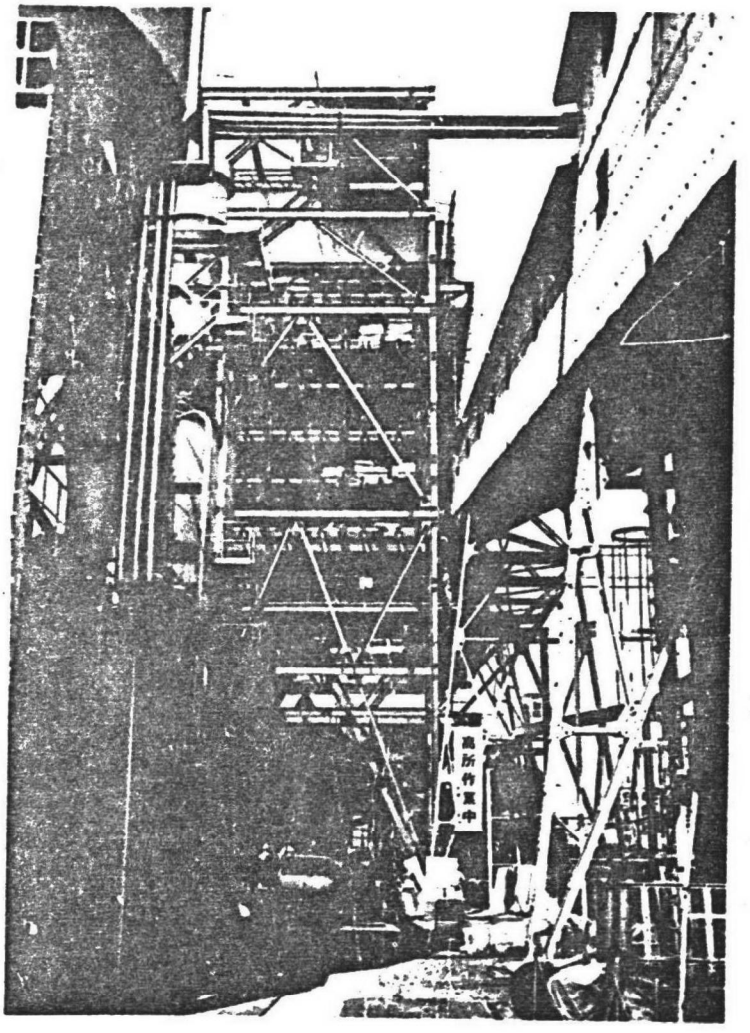

Figure 46. SCR reactor at Shimonoseki Power Station.

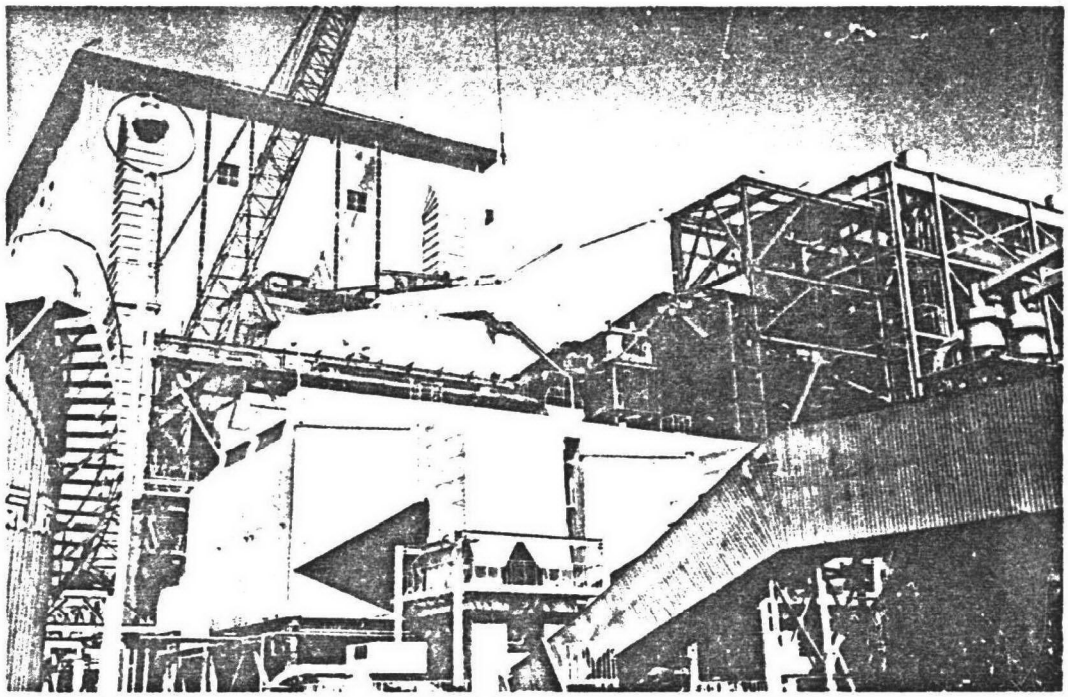

Figure 47. Reactor, air preheater and ESP at Shimonoseki Power Station.

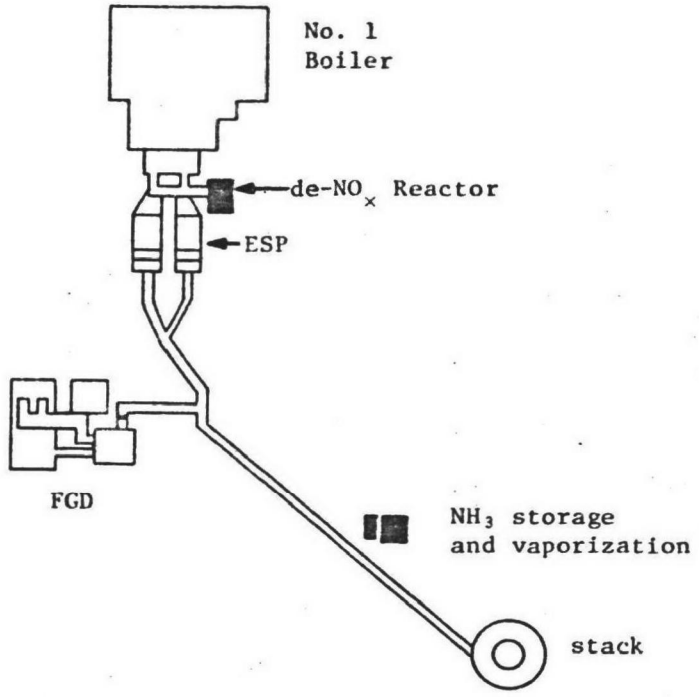

Figure 48. Plot view of No. 1 boiler, de-NOx system, ESP and FGD system at Shimonoseki Power Station.

The SCR system is supplied by MHI and designed for 50 percent NO_x removal since this is sufficient to meet the local emission standards. In practice, an NH_3:NO_x mole ratio of 0.56 will be used to get 55 percent removal with low NH_3 emissions. Higher removal levels may be required in the future if the emission standard becomes more stringent or if the nitrogen content of the coal increases, so the system was designed for these anticipated levels. To modify the now existing SCR system for 80 percent NO_x control will involve installing a larger amount of catalyst.

The square honeycomb catalyst has an 8 mm channel diameter, a 1.8 mm wall thickness, a 150 mm x 150 mm face and is 450 mm in length. The formulation is based on the popular TiO_2/V_2O_5 combination including a third component and is manufactured by Sakai Chemical. The catalyst elements are assembled into reusable steel baskets by the catalyst manufacturer. The catalyst is loaded by hoisting the basket to the appropriate level and setting it on a cart. The cart runs on rails that are integral with the exterior walkways of the reactor and is rolled past a removable wall, removed from the cart and set in place. It is estimated that a catalyst change will require 20 people 15 days to complete, working seven hours per day. Disposal of spent catalyst is provided by the manufacturer.

The reactor is a vertical downflow unit with a layer of dummy catalyst elements at the inlet face to prevent catalyst erosion by fly ash. The operating temperature for the SCR process is 360°C and will be controlled so as not to drop below 340°C, although 320° may be an acceptable lower limit according to MHI. Temperature control is provided by an economizer bypass and includes a flue gas mixing zone to insure an even temperature distribution across the reactor. The design of gas mixing zone is shown in Figure 49. NH_3 is injected upstream of the mixer to take advantage of the mixing effect. An isometric flow diagram of the whole system is shown in Figure 50 and the layout of the reactor is shown in Figure 51. The drawing of the reactor shows space at the bottom that can be used to install a low temperature economizer. It can also be used to install additional catalyst if higher NO_x removal levels are required.

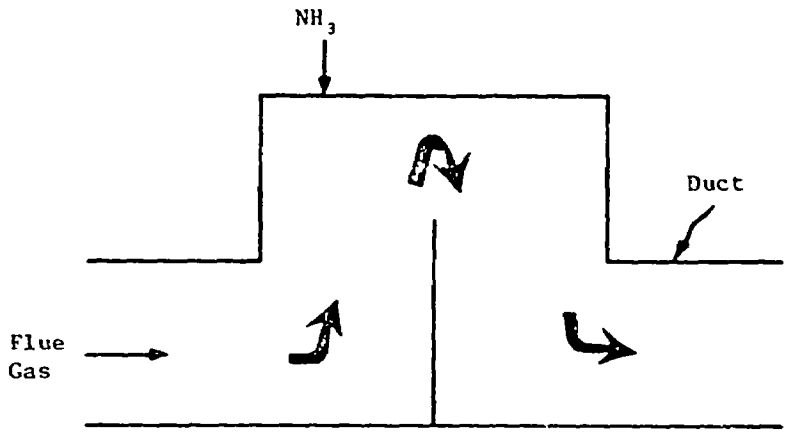

Figure 49. Design of gas mixing zone.

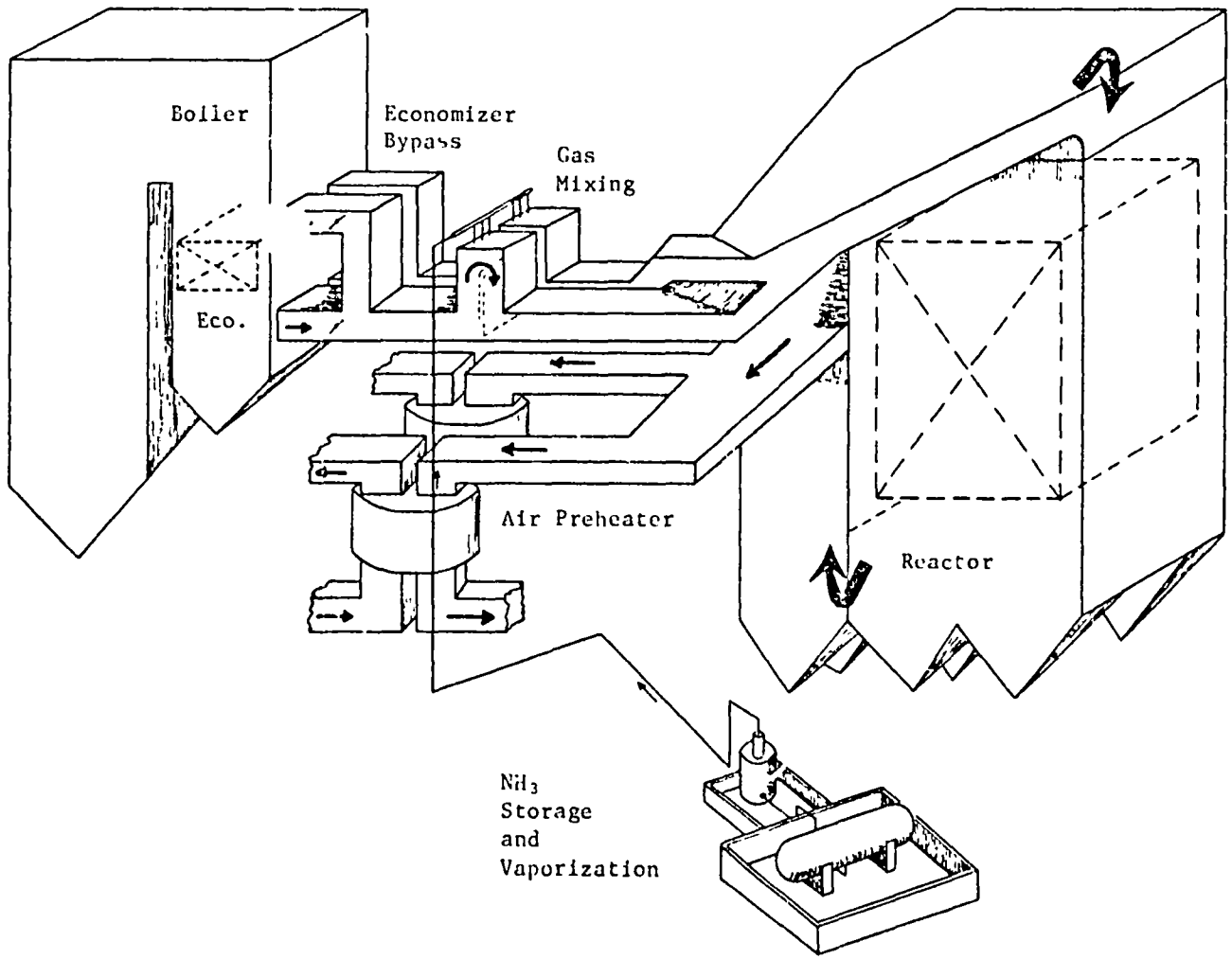

Figure 50. Isometric flow diagram of boiler and SCR reactor at Shimonoseki Power Station.

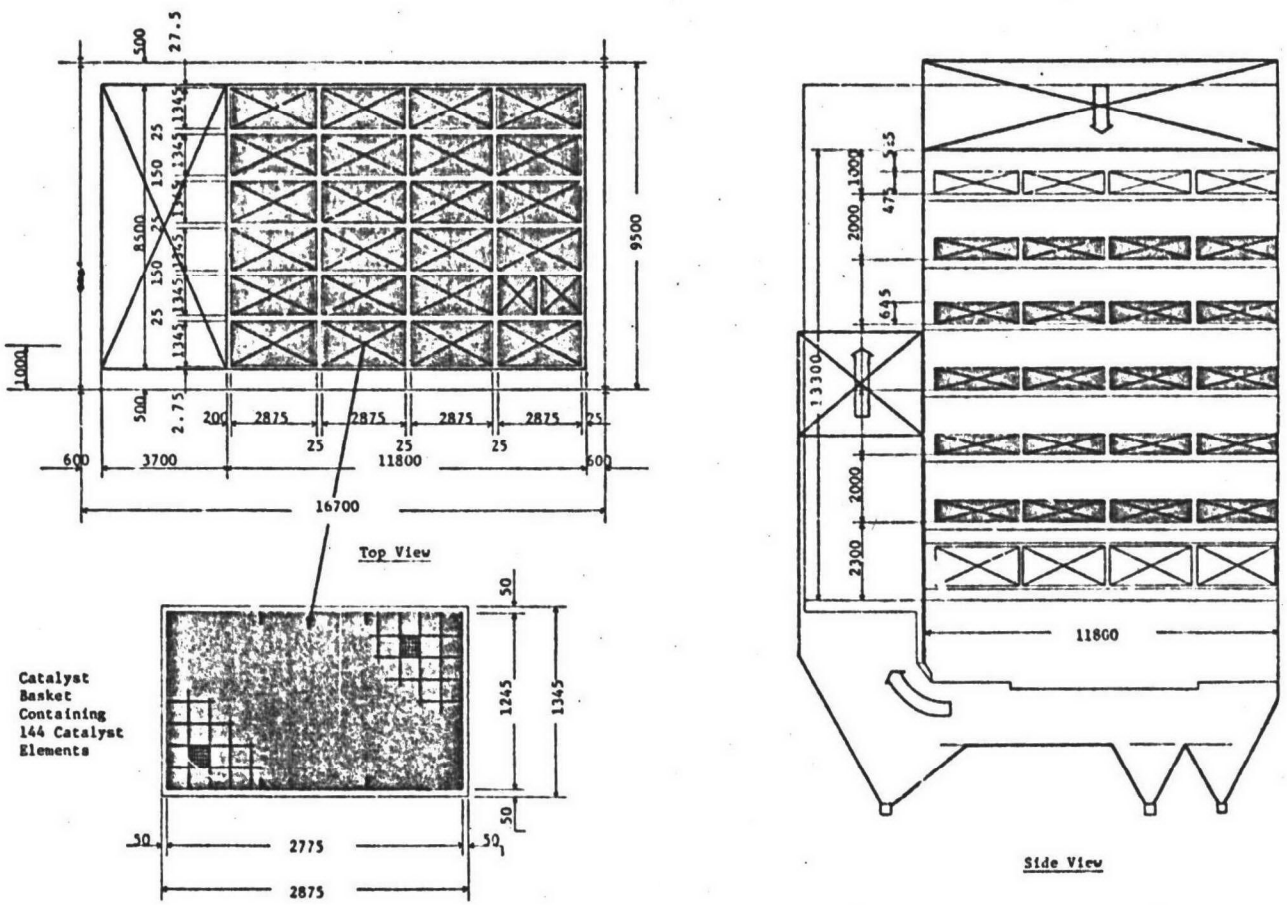

Figure 51. SCR reactor and catalyst basket at Shimonoseki Power Station (dimensions in millimeters).

Some modifications to the air preheater were made. The intermediate temperature zone element was changed to a corrosion resistant material similar to the standard low temperature zone material and the element shape was changed from a double undulated to a notched plate type. Hot side soot blowers were also added. These modifications were made for several reasons; to prepare for the switch to 100 percent coal-firing, to allow easier cleaning and to avoid plugging by NH_4HSO_4. The latter is the primary reason for the modifications.

The technique planned for soot blowing the air preheater is to blow it three times per day for two hours on both the high temperature side and the low temperature side. Two tons per hour of steam will be used. This is the planned technique, but this will be modified if necessary based on actual performance which will be based on draft loss through the air preheater. The basis for these plans is the soot blowing routine of the oil-fired boiler which injects NH_3 for ash conditioning. The air preheater of this unit is blown just to be safe and the plant plans to double this amount for the coal-fired boiler with SCR.

The reason for the conservatism with regard to soot blowing the air preheater is that, if deposits form, the ΔP will increase too rapidly for additional blowing to have any effect. They expect to water wash the air preheater at least once per year and no more than that if possible.

The reactor is also equipped with soot blowers above each catalyst stage. These are for safety reasons and are not planned to be used on a routine basis.

NH_3 exiting the reactor is expected to be very low since the NOx removal is only 50 percent. NH_3 emissions from the ESP on the #2 unit are 5 to 10 ppm and are completely removed by the FGD system prescrubber. Wastewater from the prescrubber is treated to remove Cl^- and other impurities. It is expected that a similar situation will apply to the No. 1 boiler with SCR. The total

slipstream from both boilers prescrubbers that is treated will amount to 100 T/d total.

The total cost of the retrofit SCR system is ¥2 × 10^9 ($8 × 10^6) which includes ¥1.7 × 10^9 ($6.8 × 10^6) paid to MHI for the complete SCR system including the economizer bypass and ¥0.3 × 10^9 ($1.2 × 10^6) of the plants own expense. This is roughly one-third of the cost of the FGD system.

The plant personnel indicated that the ductwork was a significant portion of the cost. The costs of some of the modifications are listed in Table 29.

TABLE 29. COST BREAKDOWN OF SELECTED MODIFICATIONS AT SHIMONOSEKI POWER STATION

Item	Cost	
	¥	$
NH_3 Injection Facilities	40-50 × 10^6	1.6-2.0 × 10^5
Air Preheater Modifications	30 × 10^6	1.2 × 10^5

ELECTRIC POWER DEVELOPMENT COMPANY

Headquarters

Tokyo

March 10, 1980

Tomozo Kimura, Executive Director

Yasuyuki Nakabayashi, Assistant General Manager

Kunihiko Mouri, Thermal Power Engineer

David Mobley

Jumpei Ando

Gary Jones

Doug Maxwell

Isogo Power Station

Kanagawa Prefecture

March 26, 1980

Y. Shimizu, Assistant General Manager

T. Yamaki, Vice Chief of Technical Division

David Mobley

Jumpei Ando

Gary Jones

Doug Maxwell

Preceding page blank

Takehara Power Station

March 14, 1980

K. Fujiyama, Assistant General Manager

David Mobley
Jumpei Ando
Gary Jones
Doug Maxwell

Preceding page blank

ELECTRIC POWER DEVELOPMENT COMPANY

The Electric Power Development Company (EPDC) is a semigovernmental company that has evaluated several SCR pilot units on coal-fired boilers at its Isogo, Takasago and Takehara power stations. Two of the systems tested will be applied full-scale at EPDC's Takehara power station. Three separate meetings were held; at the Isogo power station and at the Takehara power station, and at the Tokyo headquarters. The results of all three meetings are summarized here.

When EPDC began testing SCR processes at its Isogo, Takasago and Takehara power stations, catalysts from five processes were tested. Following the tests, EPDC selected the catalysts from Kawasaki Heavy Industries (KHI) and Babcock-Hitachi (BH) as the best two as of late 1978. As a result of these tests, the KHI and BH processes were selected for full-scale installations at EPDC's Takehara power station.

The EPDC Isogo power station consists of two, 265 MW, coal-fired utility boilers. Currently at Isogo, there are two operating pilot units, IHI and HZ. The IHI unit (Figure 52) treats 1000 Nm^3/hr in each of four reactors - two applied to particulate laden flue gas and two treating flue gas after a pilot-scale, hot ESP. The reactors treating the ash laden gas are followed by an air preheater and a baghouse. The reactors treating clean flue gas are followed by an air preheater and a 1000 Nm^3/hr limestone/gypsum FGD unit capable of treating one-half of the flow from these reactors. The FGD unit includes a Rothemuhle type regenerative air heater for gas/gas heat exchange, a mist eliminator and a wet ESP. This is a comprehensive arrangement of pollution control equipment that EPDC and IHI hope will demonstrate the effects of SCR on downstream equipment as well as screen catalysts and reactors for use with both high and low dust flue gases. The low dust system has operated for two years, however, the baghouse was only recently installed (December 1979).

Preceding page blank

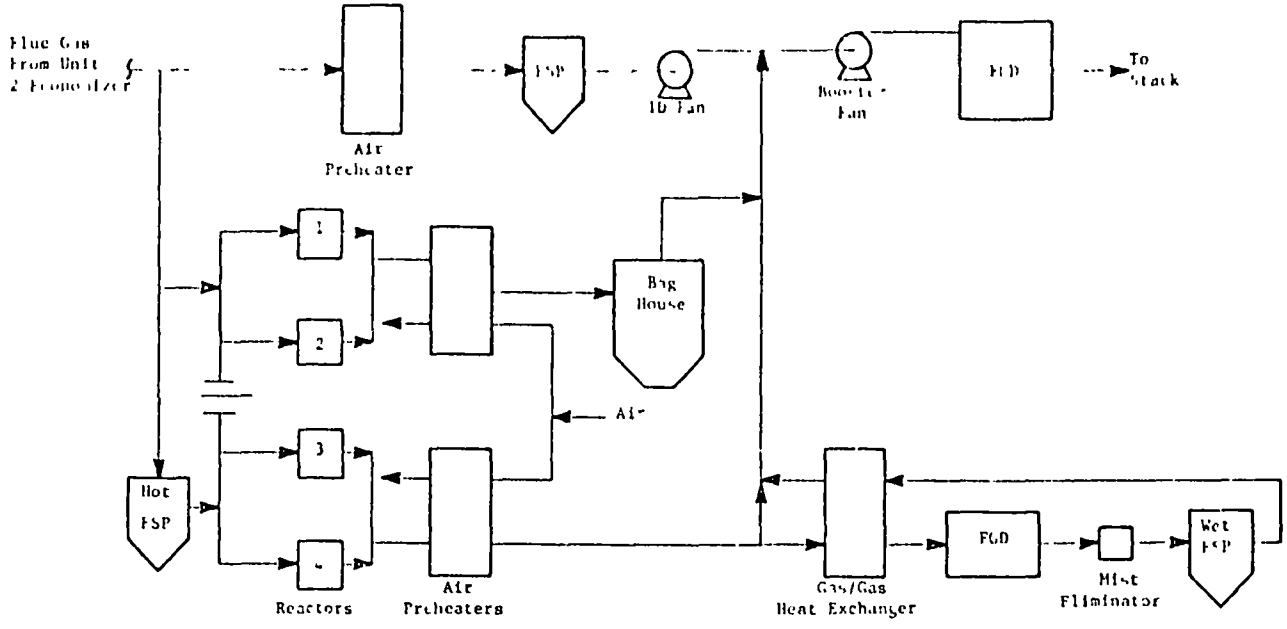

Figure 52. Flow diagram of IHI pilot facility at EPDC's Isogo Power Station.

A Hitachi Zosen pilot unit is also operating at Isogo and a flow sheet of this facility is shown in Figure 53. There are three reactors; one treating a low dust flue gas and two treating high dust flue gas. The unit has been in operation for 4 years and is currently testing the 600 series catalyst. At an $NH_3:NO_x$ mole ratio of 0.9, they experience 80 percent removal and NH_3 emissions of 5 ppm. With both catalysts (500 series and 600 series) they have had no erosion or plugging problems and have not required soot blowing. In both cases the catalysts consisted of a triangular honeycomb arrangement (Figure 54) with the parallel plates constructed at 12 mm intervals. Test results are not yet available for this unit.

During the facility tour the gas/gas heat exchanger was being disassembled in order to clean corrosion from the elements. Plant personnel felt that the corrosion was due to mist from the FGD when the wet ESP was not operating; however, it appears to be possible for the corrosion to be caused by ammonium sulfates from the SCR system. The heat exchanger has been in operation for two years and is cleaned once every six months. It is blown with steam for in-situ cleaning.

Outlet NO_x and NH_3 are monitored by an instrument manufactured by Anritsu Electric. NH_3 is analyzed by UV absorption and NH_4HSO_4 deposits are avoided by maintaining the lines at temperatures above 300°C. The instrument apparently gives good agreement with wet methods.

The pilot facilities at Isogo are two of the five joint ventures between EPDC and process vendors that have resulted in the decision to install a KHI system and a Babcock-Hitachi system at the Takehara power station. The full-scale units are currently under construction and, when completed, will treat flue gas from the Unit #1 boiler. The boiler is a 250 MW Babcock-Hitachi unit firing 2.0 percent sulfur coal. These will be retrofit units and will require significant modifications to the existing arrangement, as shown in Figure 55, including a hot ESP, the SCR system, an air preheater, an ID fan, and a waste treatment system. The plant layout and a photograph of the construction site are shown in Figure 56.

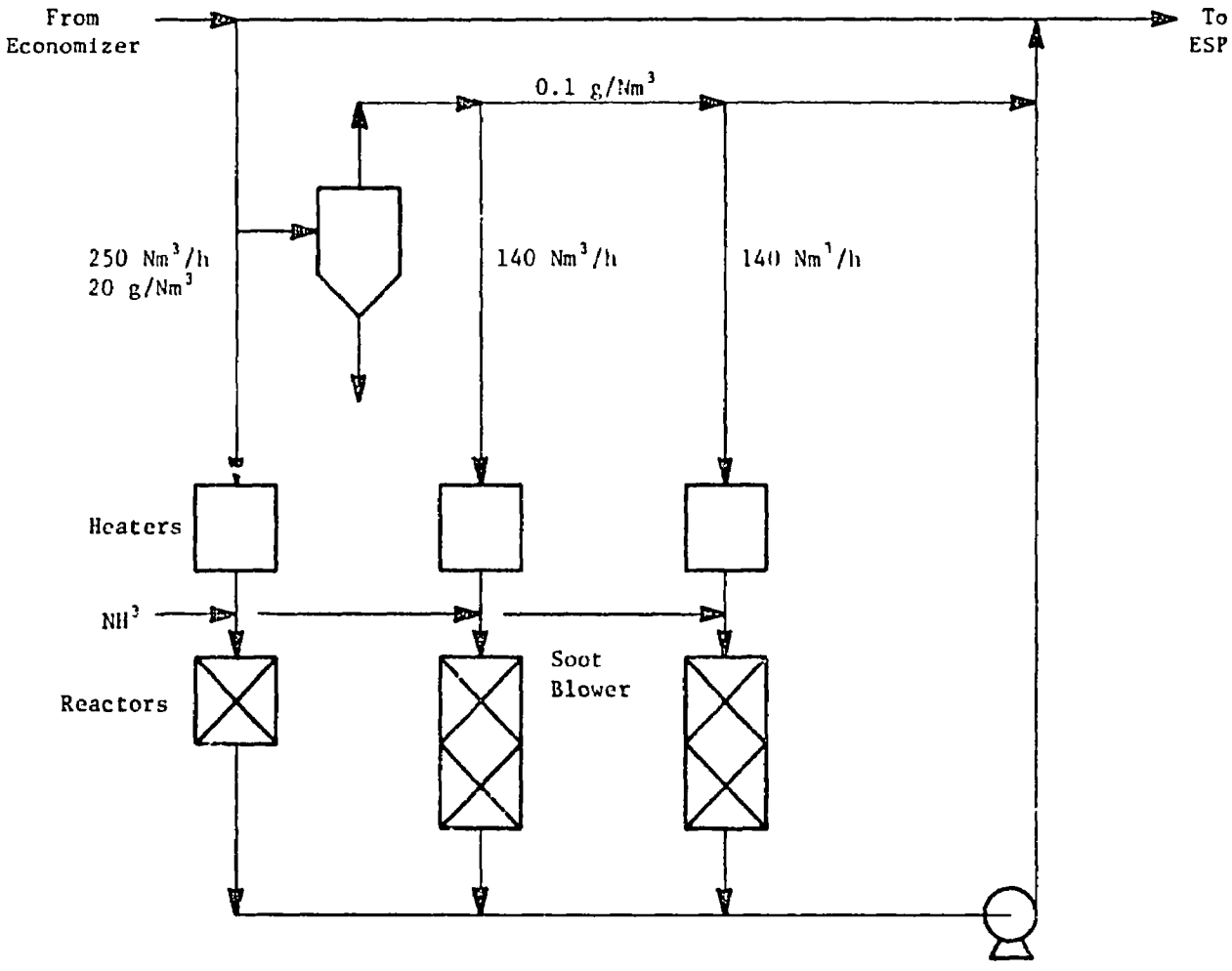

Figure 53. Flowsheet of Hitachi-Zosen Pilot Plant at Isogo Power Station.

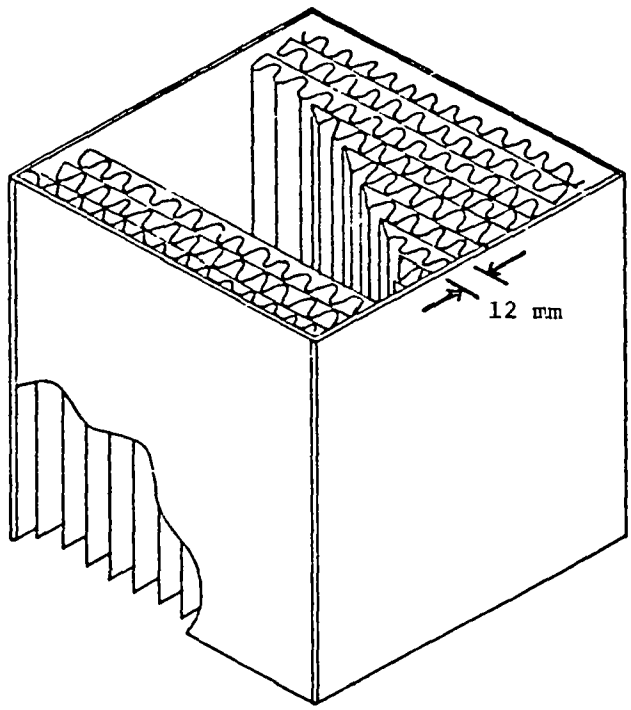

Figure 54. Structure of Hitachi Zosen Noxnon 500 and 600 catalyst.

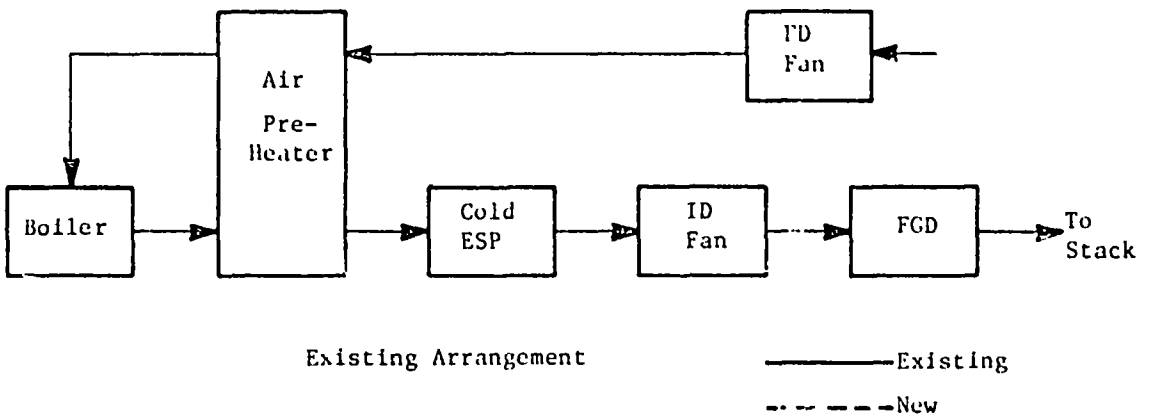

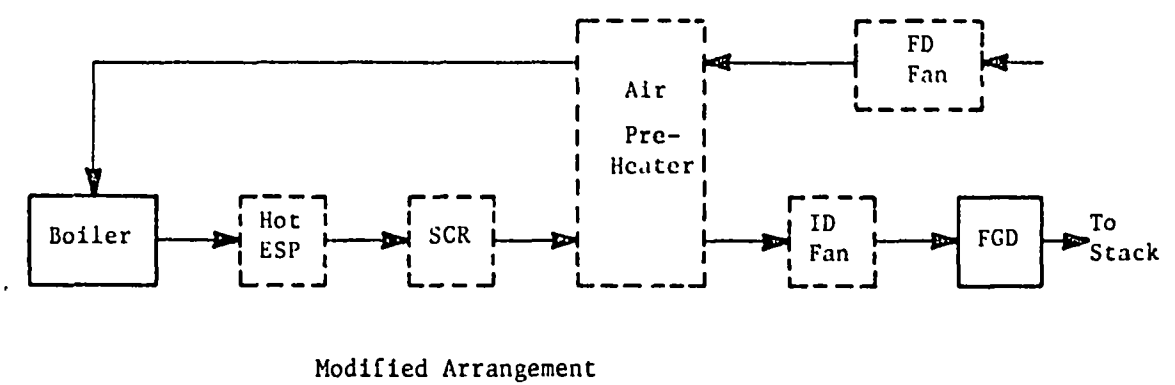

Figure 55. Equipment modifications made at EPDC Takehara Power Station for SCR system installation.

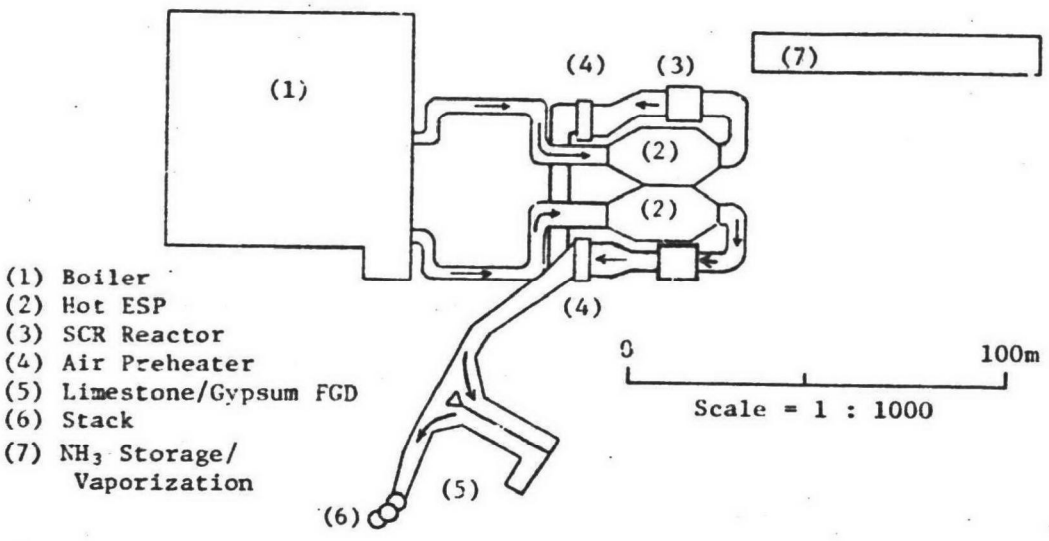

Plant Layout

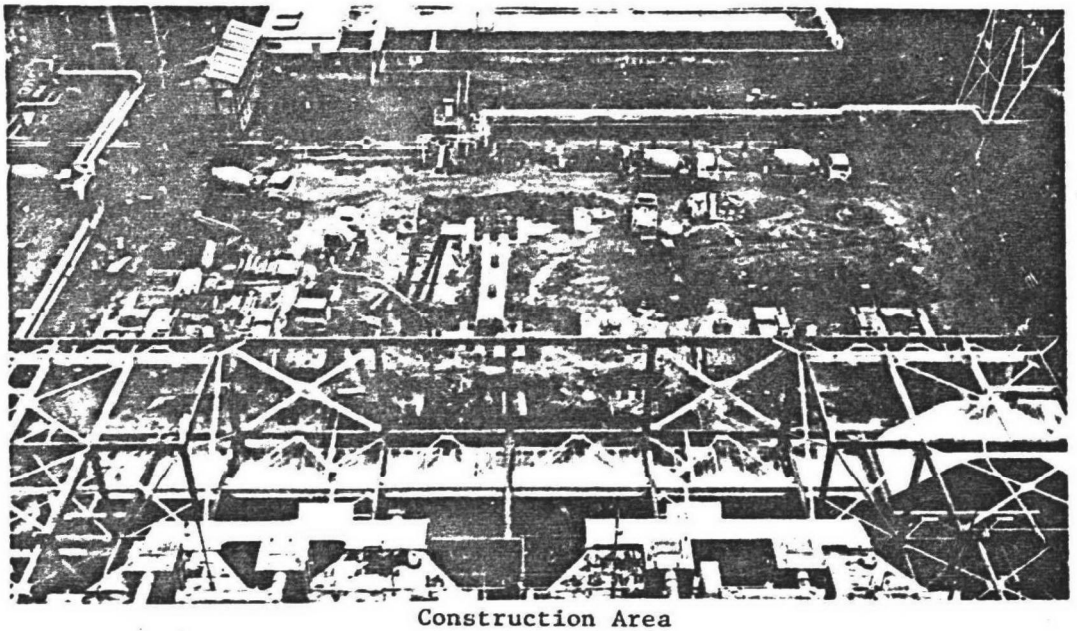

Construction Area

Figure 56. SCR system (under construction) at EPDC Takehara power station.

The hot ESP was added to prevent contamination of the ash by ammonium sulfates. In Japan, ash is either sold as an aggregate or disposed of by landfill in the sea. Fly ash contaminated with ammonium sulfates that is used as landfill in the sea can cause a red tide and kill fish. On one occasion, wash water from the #2 boiler ESP, which utilizes NH_3 injection for ash conditioning, was discharged to the fly ash pond at the beach and killed the fish in the pond. The Takehara station is particularly sensitive to this problem since it is located on the inland sea which experiences a much lower water turnover rate than coastal seas. EPDC also feels that ammonium sulfate contamination may affect the saleability of the fly ash and has conducted tests to remove NH_3 from the ash.

The new air preheater will be installed at the Takehara SCR facility to reduce the potential for NH_4HSO_4 fouling. Since the particulates will be removed upstream, the air preheater will not receive the benefit of sand blasting effect of these particulates. As a result, it is felt that there may be problems with air preheater pluggage if the existing, conventional air preheater is used.

The new air preheater is a new design developed by Gadelius K.K. The new design consists of two sets of heat transfer elements as shown in Figure 57. This air preheater is discussed in more detail in the meeting report on Gadelius.

Two new fans are also necessary at Takehara. The forced draft fan is necessary because with the new equipment layout, the air preheater is located farther from the boiler and, consequently, there is a larger draft loss in the air duct. The induced draft fan is necessary to overcome the draft loss created by the SCR reactor and associated ducting. The existing and new fans are compared in Table 30.

About 50 kW are used by the NH_3 vaporization and delivery system. This makes the net change in energy consumption required by the SCR system equal

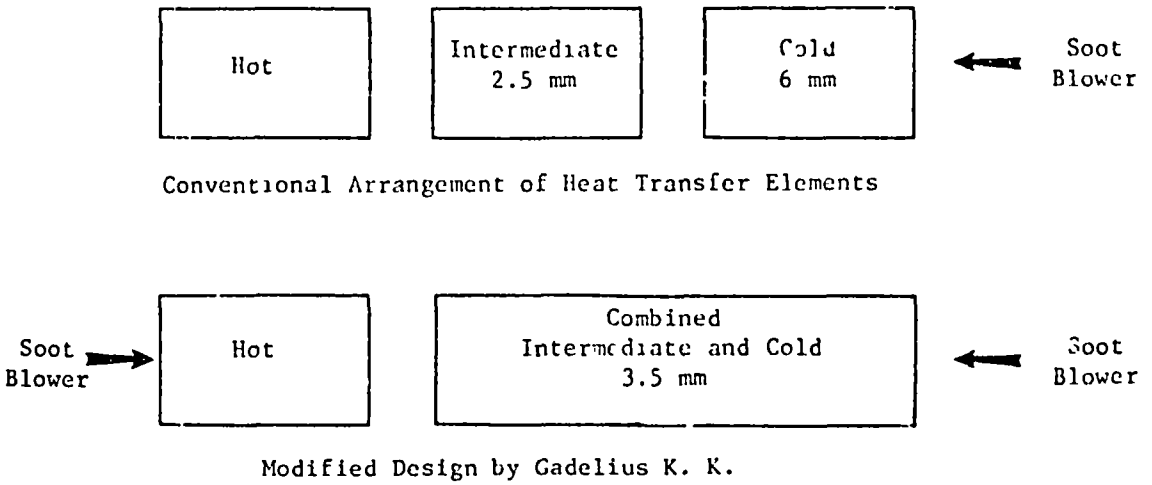

Figure 57. Comparison of conventional and modified air preheater designs.

to 3500 kW or 1.4 percent of the power output of the boiler. The plant personnel felt that a better equipment layout would reduce energy usage to 1450 kW.

TABLE 30. COMPARISON OF EXISTING AND NEW FANS AT TAKEHARA POWER STATION

Fan	kW	
	Existing	New
Forced Draft (air)	630 x 2	1350 x 2
Induced Draft (gas)	1350 x 2	2350 x 2

An NH_3 storage capacity of 75 tons is planned to meet the requirements for NO_x control of both the #1 and #2 boilers. NO_x control equipment will be installed on the #2 boiler (350 MW) in 3 to 4 years when it switches to coal. The two units are expected to require a total of 5 tons/day of NH_3.

NH_3 concentrations in the outlet stream of the SCR reactor are expected to be very low. NH_3 emissions will be further reduced by the downstream FGD system; however, this will require the installation of an activated sludge system to control the nitrogen concentration of the wastewater to <10 ppm as required by regulation. Currently, the FGD system purges 15 tons/hour of wastewater which is treated in an existing treatment system. The activated sludge treatment system will apparently operate in series with the existing treatment system.

The total cost of applying SCR to the #1 boiler at Takehara is 8×10^9 yen which includes the hot-side ESP's, air preheaters, fans and the waste treatment system. This cost is relatively high because of the additonal equipment necessitated by retrofitting the SCR system to an existing boiler. This is the investment costs; annualized costs are not yet available.

Also at Takehara, a test program is underway on a dry, NO_x/SO_2 removal process. The system is supplied by Sumitomo Heavy Industries and utilizes a moving bed of activated carbon. EPDC's primary reason for developing a dry

SO_2 control process is to save water and to have a process that is more compatible with SCR.

The test unit removes 90 to 95 percent of the SO_2 and 30 percent of the NOx from the flue gas. The NOx removal aspect of the process is similar to typical SCR processes; however, an NH_3:NOx mole ratio of 0.7 is required to get the 30 percent removal. While the NH_3:NO_x reaction may be equimolar, the excess NH_3 is adsorbed by the char as a sulfate. This reduces carbon consumption during thermal regeneration. Some details on the process are summarized in Table 31.

TABLE 31. OPERATING DATA FROM SUMITOMO ACTIVATED CARBON PROCESS AT THE EPDC TAKEHARA POWER STATION

Operating time on test unit	7000 hr
SO_2 removal	90-95%
NO_x removal	30%
NH_3:NO_x mole ratio	0.7
Inlet SO_2 concentration	1300 ppm
Inlet NO_x concentration	320 ppm
Operating temperature	130-140 C
Carbon consumption, typical	0.5% of total volume/day
Regeneration	Heating with gas that is low in O_2
SO_2 workup	Resox
Catalyst dimensions	About 1/4 cm. dia. x 1 cm. length

It is necessary to collect particulates (ash and catalyst fines) resulting from the catalyst screening step and both an ESP and baghouse are being evaluated. With the relatively low NO_x removal of this process a separate SCR system may be required. The #3 boiler will have SCR and wet FGD but the vendors have not yet been selected.

In addition to the test units and full-scale applications, EPDC discussed the general aspects of SCR applied to coal-fired boilers. They feel that air preheater pluggage by NH_4HSO_4 requires changes in air preheater operation, material and design. Past experience indicates that the pluggage occurs at the interface between the intermediate and cold temperature zones because soot blowing is not effective in this area. They hope that the modified element design will allow effective soot blowing throughout the air preheater. In addition, both hot and cold sides use improved, more effective soot blowers. The new design of air preheater is heavier and will cost roughly twice as much as conventional units. If necessary, this air preheater will be washed during the annual outage and the water treated with the boiler tube washwater.

EPDC feels that SCR is very reliable, 99+ percent, and that redundancy in reactors is not necessary. The systems will require no operators or additional maintenance personnel. At Takehara, the catalyst manufacturer will supply the labor necessary to change out the catalyst.

The investment costs for SCR applied to a new boiler are ¥7000/kW ($28.5/kW) and operating costs are ¥0.6/kWh (2.5 mills/kWh). These costs are based on one year catalyst life, seven years depreciation, 8 percent interest and 100 percent financing.

In terms of NO_x removal, EPDC feels that 80 percent is the most reasonable target. Removals of 90 percent are technically feasible, but the conversion of SO_2 to SO_3 will increase as the catalyst volume is increased. Typical values are shown in Table 32.

TABLE 32. CONVERSION OF SO_2 TO SO_3 BY SCR CATALYST

NO_x Removal Percent	Percent of Inlet SO_2 Converted to SO_3
80	1
90	2

Catalyst manufacturers are working on this problem and it is anticipated that for 80 percent NO_x removal, SO_2 conversions will be <0.5 percent by the time that SCR is applied to the Takehara #3 boiler.

EPDC is examining continuous NH_3 measurement techniques, but currently use a manual method. NH_3 analyzers have not worked in the past, but they are trying a model by Anritsu Electric at their test units. Experience has shown that SO_2 concentrations of >500 ppm cause reliability problems. For NO_x measurement, they use chemiluminescence.

Control of the SCR system is typically done by using a feedforward signal consisting of the product of inlet NO_x concentration and flue gas flow rate. This is done by measuring boiler load. NH_3 is controlled with a rotameter arrangement.

FUJI OIL

Sodegaura Refinery
Chiba Prefecture

March 21, 1980

Yoshihiro Hirotani, General Manager of Refining Department
Y. Miyabuchi, Vice Chief

David Mobley
Jumpei Ando
Gary Jones
Doug Maxwell

Preceding page blank

FUJI OIL

Fuji Oil's Sodegaura Refinery is located in the Chiba prefecture and must comply with local regulations established by the prefectural government. These regulations have necessitated NOx controls on four boilers; two have combustion modifications and two have catalytic de-NOx units. The boilers are listed in Table 33.

The #7 boiler utilizes an MHI SCR system located between the boiler and the economizer as shown in Figure 58. The boiler was built with the SCR designed as an integral unit. Therefore, the SCR reactor exists as extended duct work between the boiler and economizer. This location is necessary in order to treat gas in the 330 to 370°C temperature range. The SCR system has operated for 2.25 years with no catalyst deterioration and 1 to 2 more years are expected. The catalyst is a coated, ceramic base catalyst manufactured by NGK. Several different formulations are installed in the reactor as part of an MHI test program.

TABLE 33. NOx CONTROL ON INDUSTRIAL BOILERS AT FUJI OIL SODEGAURA REFINERY

Boiler No.	Fuel	Steam Rate, T/h	de-NOx Equipment	NOx, ppm Inlet	NOx, ppm Outlet
5	Fuel Oil	160	Flue Gas Recycle Staged Combustion	150	80
6	Fuel Oil	160	Flue Gas Recycle Staged Combustion	150	80
7	Fuel Oil	200	SCR (MHI)	115	15
CO Boiler	CO + Fuel Oil	45	SCR (JGC)	180	15

Preceding page blank

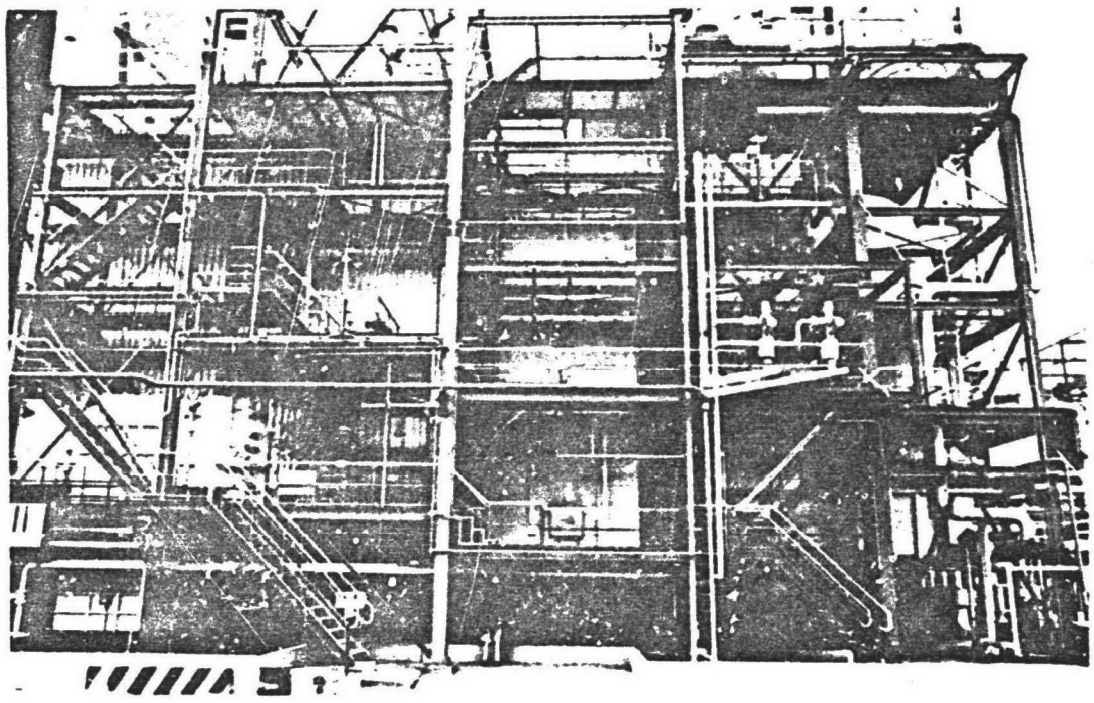

No. 7 Boiler

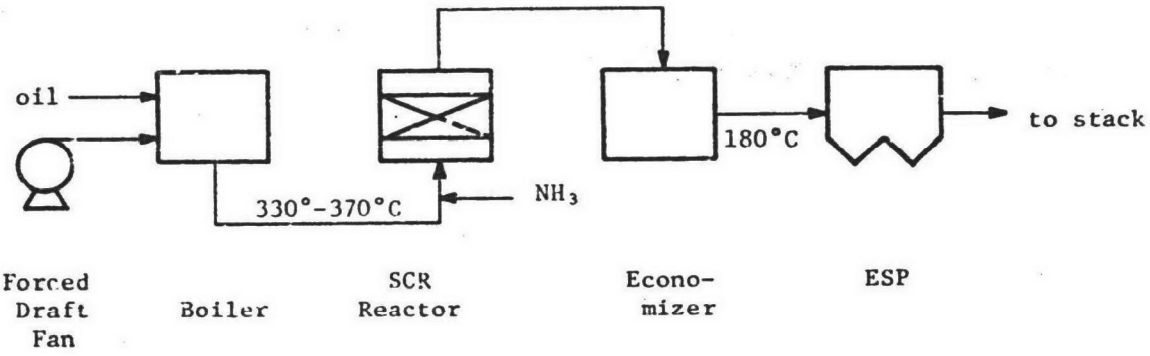

Figure 58. MHI SCR system applied to industrial boiler at Fuji Oil Refinery.

Some plugging was experienced in the economizer after six months operation necessitating a water wash. During this period the economizer ΔP increased twelvefold. The problem stemmed from some pluggage in the catalyst bed which caused the concentration of unreacted NH_3 in the reactor outlet gas to increase. This increased the reaction temperature for NH_4HSO_4 formation and allowed NH_4HSO_4 to form on the economizer tubes. Additional soot blowers were installed in the reactors and the soot blowing procedure for the reactor and economizer was changed. This allows the boiler to operate one year before the economizer must be cleaned. Soot blowing is done carefully to avoid contacting the catalyst with water droplets.

Plant personnel feel that the catalyst face plugging may have been due to a silica combustion additive used to increase the melting point of the ash. Silica was used since MHI advised that the alternative compound, composed of magnesium and lime, could harm the catalyst. Catalyst face plugging has not occurred since the use of the additive was stopped and the additional soot blower was installed.

MHI has agreed to take back the catalyst for disposal when it is spent. Water from the economizer wash is disposed of by neutralizing the pH with NaOH and routing it to the existing plant water treatment system. The treatment system consists of oil separation, neutralization ponds, filtration and activated carbon adsorption.

The JGC SCR systen applied to the CO biler is shown in Figure 59. This unit was operated for six months and shutdown when the refinery dropped back to 70 percent capacity and the NOx offset from the CO boiler was not required. Plant personnel indicated that this unit was less energy efficient due to the high reactor ΔP and the inline heater.

The plant personnel also indicated that both units have been trouble-free and reliable. One man is sufficient to operate both the boiler and the SCR system.

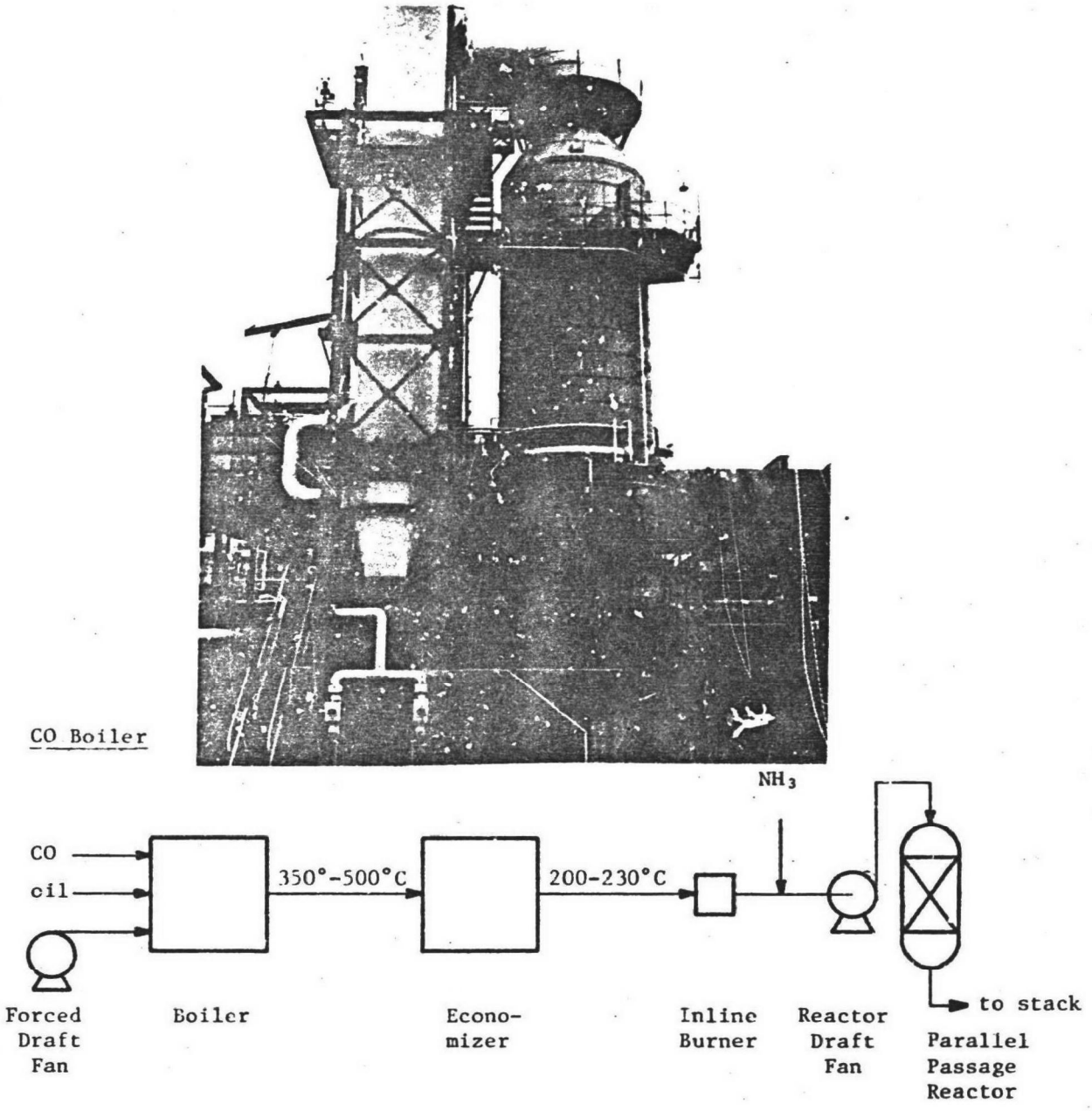

Figure 59. JGC SCR system applied to CO boiler at Fuji Oil Refinery.

HOKKAIDO ELECTRIC

Headquarters

Tokyo

March 21, 1980

Mr. Yoshida, Manager of Technical Division

Hideji Imanishi, Deputy General Manager of Hokkaido Plant

Y. Katsuki

Hideo Kojima, Hitachi, Ltd, Manager of Environmental Equipment Dept.

David Mobley

Jumpei Ando

Gary Jones

Doug Maxwell

HOKKAIDO ELECTRIC

Hokkaido Electric is currently constructing a coal-fired power plant near the city of Tomakomai on Japan's northern island of Hokkaido. The 350 MW boiler will burn low sulfur (0.3 percent) coal containing 20 percent ash. One quarter of the $10^6 Nm^3/hr$ flue gas stream will be treated by SCR for 80 percent NOx removal. The flue gas will also be treated by a hot-side ESP and a limestone/gypsum FGD. The FGD will treat half of the total flue gas. A plot plan of the plant is shown in Figure 60.

The hot-side ESP is used because years ago, when the project was planned, SCR had not been proven with high particulate loadings. Also, the low sulfur coal makes a hot-side ESP desirable.

The boiler, FGD and SCR will be supplied by Babcock-Hitachi. The boiler will use dual register burners and flue gas recirculation to limit NOx formation in the boiler to 200 ppm. The SCR will reduce the total NOx measured at the stack to <170 ppm which meets the emission regulations.

NH_3 emissions are expected to be very low since only one-fourth of the gas is treated by SCR. Consequently, no special provisions for air preheater cleaning or soot blowing are planned. Some NH_3 may be removed by the FGD system but the overall concentration is expected to be small. NH_3 will be injected at a mole ratio of 0.83 and one weeks storage of NH_3 is provided. Of the 170,000 T/yr of ash produced, 18 to 24 percent will be sold to the cement industry and the remainder used for land reclaimation. Spent catalyst will be disposed of by Babcock-Hitachi. The catalyst to be installed at Hokkaido is guaranteed for one year.

An economizer bypass will be installed for temperature control since it was considered necessary when the plant was designed four years ago. However, due to the fact that when the boiler load drops so do both NOx concentration and space velocity, the thinking has changed. Plant personnel

Preceding page blank

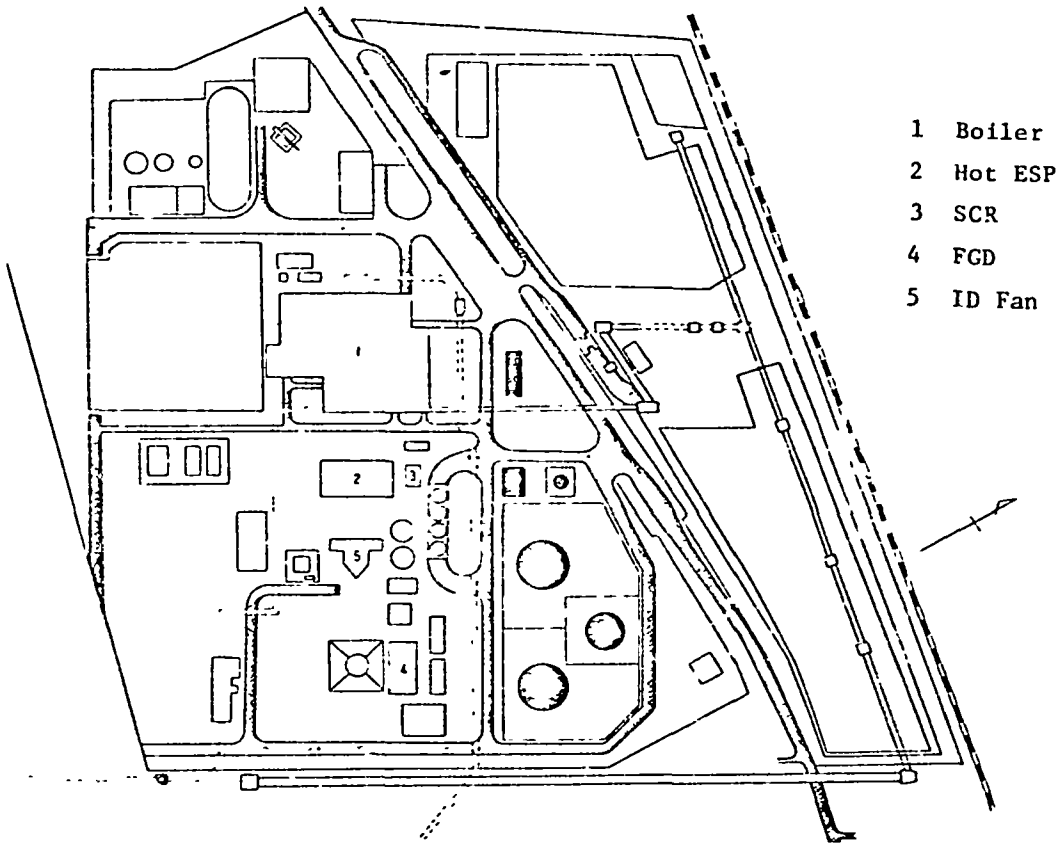

Figure 60. Plot view of Hokkaido Electric Coal-Fired Power Station.

currently feel that the bypass will be unnecessary to maintain the 300°C minimum design temperature.

The number of operating personnel has not been decided. Potentially, there will be a separate control room with 2 to 3 operators to handle environmental control (ESP, SCR, FGD), water treatment and coal handling. The main boiler control room will have 5 to 6 operators and a total of 100 people will be required to staff the whole plant. It is estimated that a catalyst change will take about one week following cool down during the one month scheduled boiler outage.

A second 600 MW boiler is planned, but not yet authorized. If authorized, Hokkaido plans to re-evaluate several of the design criteria including hot vs. cold-side ESP's.

TOA NENRYO KOGYO K.K.

Kawasaki Refinery

Kanagawa Prefecture

March 24, 1980

Yukio Yasumura

Toshihide Mori, Section Head

S. Yamada, Manager

Gary Jones

Doug Maxwell

Preceding page blank

TOA NENRYO KOGYO

Toa Nenryo (Tonen) utilizes an Exxon Thermal de-NO_x system on a pipe still at their Kawasaki refinery. The unit is not operated continuously since the NO_x emissions are under the 0.38g/mcal limit. However, when there is a smog alert issued by the Kanagawa air monitoring center, the thermal de-NO_x system is operated to effect a 20-50 percent NO_x reduction. Last year, this resulted in 10 days of operating time.

Injection of NH_3 and reducing gas is controlled by the outlet NH_3 concentration which is maintained at $\leq$20 ppm. The reducing gas is a refinery stream consisting of H_2 and hydrocarbons. Use of the reducing gas is seldom necessary and is injected only when the gas temperature drops causing the outlet NH_3 to rise. When injected, its flow rate is roughly 20 percent of the NH_3 flow rate.

Continuous NH_3 analysis with chemiluminescent analyzers has been a problem and Tonen has experienced problems similar to those in the US. A major problem is that the instrument will indicate NH_3 concentrations that are one-half of the actual concentration. Tonen claims to have solved this problem and applied for a patent. No details are currently available except that temperature control is very important. The patent disclosure is expected in late 1980. A brief visual inspection of the system showed a rather large sample gas treatment station located adjacent to the outlet duct and upstream of the Shimadzu NHA-302 analyzer. This system reportedly has a measurement accuracy of ± 10 percent.

Tonen also has installed the thermal de-NO_x equipment to two utility boilers (468,000 Nm^3/hr each) and a CO boiler (34,000 Nm^3/hr) in other areas of the plant. Operation of these units is similar to that installed in the pipe furnace.

The de-NO_x system applied to the pipe still was checked for the presence of HCN; however, it was not detected when reducing gas is not injected.

Preceding page blank

TOKYO ELECTRIC

Headquarters

Tokyo

March 2o, 1980

Tetsao Takeuchi, Deputy Manager of Thermal Power Dept.
Masahara Nagaoka, Deputy Manager of Environmental Protection Dept.
Hitoshi Tominaga

David Mobley
Jumpei Ando
Gary Jones
Doug Maxwell

Preceding page blank

TOKYO ELECTRIC, TOKYO HEADQUARTERS

Tokyo Electric is currently involved in a cooperative effort with Tohoku Electric Power Company, Joban Joint Power Company and Mitsubishi Heavy Industries to demonstrate an integrated flue gas treatment system treating coal-fired flue gas on pilot scale equipment. The participants feel that demonstrating a system in which particulates, NOx and SOx are removed from the same flue gas stream will provide information more meaningful than just testing a single step. Accordingly, a set of pilot scale equipment including both hot and cold-side ESP's, a baghouse, air preheaters, an SCR system, a FGD system, a gas/gas heater, a wet ESP and three waste water treatment systems has been assembled at Joban Power Company's Nakoso Power Station. The equipment is arranged to provide flue gas with both high and low particulate loadings to the SCR reactor and air preheater as shown in Figure 61.

As of Spring 1980, 5000 hours of testing had been completed using high fly ash loadings in addition to 4000 hours of testing with low fly ash loadings. Tokyo Electric is prepared to release most of the test results although some results must wait until the final tests are completed.

The SCR systems operate at a NH_3:NOx mole ratio of 0.85 and can achieve up to 85 percent NOx removal, although 80 percent is the guarantee. Both honeycomb and plate type catalysts have been tested in both vertical and horizontal configurations. Initially the air preheaters were both of conventional design; however, it was necessary to modify the air preheater used with low ash test unit and this is described in the discussion of the results of low ash testing.

Tests with High Ash Loadings

Testing with full particulate loadings has shown catalyst erosion and plugging problems do not occur. To prevent erosion, a dummy space in the

Preceding page blank

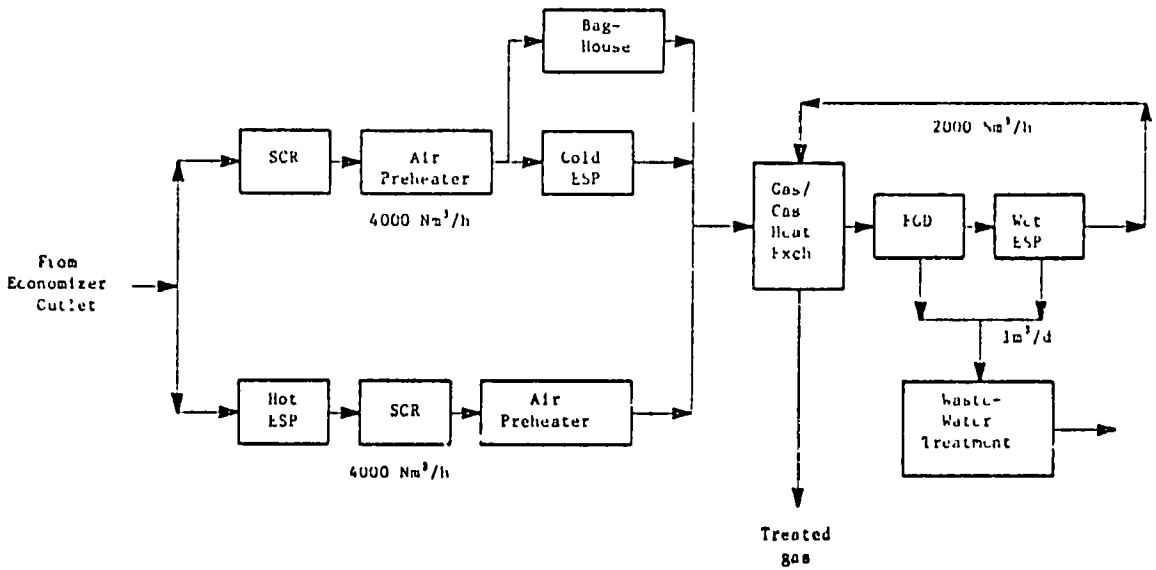

Figure 61. Layout of pilot scale flue gas treatment system at Joban Power Company's Nakoso Station

shape of catalyst elements is installed at the reactor inlet and has been very effective. The catalyst was inspected frequently and no catalyst plugging occurred even though no soot blowing was performed. Consistent NOx removals of 80 percent were achieved.

Air preheater pluggage by NH_4HSO_4 did not occur anywhere and this is attributed to a sand blasting effect of the fly ash. During testing, the air preheater was soot-blown once per day.

A double effect particulate control system is used with the high ash load SCR equipment which includes a cold-side ESP followed by a new design MHI prescrubber for particulate removal. Tests in which the ESP outlet concentration ranged from 100 to 300 mg/Nm^3 showed that the particulate concentration at the outlet of the prescrubber ranged from 15 to 35 mg/Nm^3. This second ash removal step is considered necessary in Japan because it is likely that, at any coal-fired power station, a wide variety of foreign coal types will be burned including low sulfur coals. Ash from low sulfur coals does not respond well to ESP treatment and therefore, the particulate scrubber allows a consistent level of particulate control without regard to coal type.

Tests with Low Ash Loading

These tests involved use of a hot-side ESP which is an alternative to the two step technique described above. The performance of a hot ESP is not affected by the sulfur content of the coal. This is a more difficult situation for the SCR system since the ash remaining in the flue gas is finer, more sticky and more prone to cause plugging problems. Tests showed that catalyst plugging tended to occur at the inlet face. The plugging is worse with small pitch catalyst shapes, low gas velocities and horizontal gas flow reactors. The plugging can be controlled by careful section of catalyst shape, gas velocity, reactor configuration and soot blowing frequency. On the pilot unit, soot blowing of the catalyst bed is necessary once every four days, however, specific data on the other design values were not available at

the time of the meeting. Once the appropriate design and operating parameters were established, steady state operation of the SCR system was achieved.

The low ash condition caused considerable plugging in the intermediate and low temperature zones of the air preheater. To combat this problem a specially shaped element has been installed in which the intermediate and low temperature elements have been combined into a single element. The new element, combined with soot blowing three times per day, has apparently minimized the plugging problem.

Other Tests

The FGD system is a limestone/gypsum process and has operated with high reliability and achieves 90 percent removal of SO_2. The wastewater treatment facility consists of a clarifier, an activated sludge unit for nitrogen removal and a COD treatment process; presumably an aerator. These units have successfully reduced suspended solids, nitrogen and COD such that Tokyo Electric and the other participants feel that these processes can be successfully applied to full scale systems. The activated sludge system is not necessary yet, but will be in the future if NH_3 emissions in waste water are regulated as is anticipated in Japan.

The tests with the baghouse are still underway and results are not available. They have experienced some operational problems which may or may not be due to NH_4HSO_4. Further testing should reveal the source of the problems which involve bag plugging and high pressure drops. The results of the baghouse tests will be available by the end of September, 1980.

The personnel at Tokyo Electric now feel that SCR NO_x removal systems can be successfully applied to coal-fired boilers without seriously impacting other flue gas treatment equipment. It is important that the overall system be considered during the design phase in order to minimize adverse

impacts. Technically, the most desirable system is to install the SCR reactor and air preheater upstream of the ESP in order to benefit from the abrasive effect of the fly ash. Catalyst erosion can be eliminated by installing a dummy layer of material shaped like the catalyst at the inlet of the reactor. A vertical downflow reactor is preferred with all coal applications and soot blowing is probably not required, but may be installed as a safety measure.

In Japan, where the coal type is variable, hot-side ESP's or baghouses may be necessary. Hot ESP's will require most emphasis on the design of the SCR system and air preheater in order to avoid plugging problems. Baghouse technology for power plant applications is in an early stage of development in Japan and it is too early to determine if baghouses can be used downstream of SCR systems. Tokyo Electric hopes that further testing will answer the remaining questions.

The results of this integrated test program are important to the participant companies since all are planning to install coal-fired boilers in the future as shown in Table 34.

For full scale SCR systems on coal-fired units Tokyo Electric expects the cost to be ¥5000 to 7000/kW ($20-28/kW) for 80 percent removal, half of which is the catalyst cost. The catalyst life guarantee will be one year. Although 90 percent removal can be achieved, they prefer 80 percent since significantly less NH_3 is necessary and reactor outlet NH_3 emissions are reduced, thereby minimizing problems with downstream equipment. Their plans include using combustion modifications in addition to SCR for NOx control.

TABLE 34. COAL-FIRED BOILERS PLANNED BY COMPANIES PARTICIPATING IN PILOT UNIT TEST AT NAKOSO POWER STATION

Company	Boiler Size, MW	Fuel	Start-up
Tokyo Electric	1000	Coal	1988
Tokyo Electric	1000	Coal	1988
Tohoku Electric	600	Coal	1985
Tohoku Electric	600	Coal	1985
Tohoku Electric	600	Coal	1985
Joban Power	600	Coal/Oil (10/90)	1983-4
Joban Power	600	Coal/Oil (10/90)	1983-4

APPENDIX C

GOVERNMENTAL AGENCIES AND INDUSTRY GROUPS

CENTRAL RESEARCH INSTITUTE OF THE ELECTRIC POWER INDUSTRY

Headquarters

Tokyo

March 27, 1980

Yoshimi Ishihara, Manager of Environmental Chemistry Dept.

Kenkichi Masui, Research Advisor

Teruo Yatabe, Senior Research Engineer

Tsuneo Nakanishi, Deputy Manager of Siting and Environment Dept.,
Federation of Electric Power Companies

Mamoru Masuda, Chief of Siting and Environment Dept.
Federation of Electric Power Companies

David Mobley

Jumpei Ando

Gary Jones

Doug Maxwell

Preceding page blank

CENTRAL RESEARCH INSTITUTE OF THE ELECTRIC POWER INDUSTRY

The Central Research Institute of the Electric Power Industry (CRIEPI) is a general research organization representing Japan's electric power industry. Control of nitrogen oxides is an important issue to CRIEPI and FEPC since increased utilization of coal by the utility industry is anticipated. By 1995 it is anticipated that 12 to 13 percent of the country's total electric power will be produced from coal as shown in Table 35.

TABLE 35. TARGETS FOR COAL UTILIZATION FOR ELECTRIC POWER GENERATION IN JAPAN (OPERATING UNITS)

Year	Coal-Fired Boiler Capacity, MW	Percent of Total Electric Power Generated by Coal
1978	4410	3.7
1985	10,000	5.6
1990	22,000 - 23,000	9.5 - 10
1995	33,000 - 36,000	12 - 13

All existing utility boilers have been modified to include combustion modifications and both FEPC and CRIEPI feel that SCR has been successfully demonstrated on gas- and oil-fired boilers. With some development they feel that SCR technology will be equally useful on coal-fired boilers and feel that most all of the coal-fired boilers will have SCR for NO_x control. It is anticipated that the requirement will be a result of local agreements and not a result of regulations established by the Japan Environment Agency which, at the present time, only require combustion modifications as shown in Table 36. SCR units will operate at 80 percent NO_x control rather than 90 percent since 80 percent is felt to be a more economical and practical control level.

The investment cost of SCR is about ¥3000 to 4000/kW ($12 to 16/kW) for oil-fired applications and about ¥6000 to 7000/kW ($24 to 28/kW) for coal-fired applications which represents about 1.5 percent of the cost of a new boiler for the oil-fired case.

Preceding page blank

TABLE 36. JAPAN ENVIRONMENT AGENCY STANDARDS FOR BOILER NO_x EMISSIONS

Boilers	Flue Gas ($10^3 NM^3/h$)	Existing Boilers (ppm)	Newly Installed Boilers (ppm)	O_2 (%)
Gas Firing	Over-500	130	60	5
	100-500	130	100	
	40-100	130	100	
	10-40	150	130	
Solid Firing	Over-100	480	400	6
	40-100	600	400	
	10-40	600	400	
Liquid Firing	Over-1000	180		4
	500-1000	180	130	
	100-500	190	150	
	40-100	190	150	

The reliability of SCR systems applied to coal-fired boilers is expected to be similar to that for oil-fired boilers; however, more catalyst may be required and catalyst life may be lower. NH_3 emissions are not a major concern since NH_3 is currently used on oil-fired boilers for ash conditioning with no problems. High concentrations of NH_3 in waste water may require activated sludge treatment or stripping if eutrophication is a local problem. Catalyst disposal will be provided by the catalyst manufacturers and all current SCR users in the utility sector have contracts to this effect.

CRIEPI has also done research on stack gas analysis methods including those for NO_x and NH_3. The principle methods used in Japan for NO_x measurement are shown in Table 37. In power plants, chemiluminescense is the most widely used method with 75 percent of the applications using this method. NDIR and NDUV are used in 11 and 14 percent of the applications, respectively.

TABLE 37. MEASUREMENT METHODS FOR NO_x

Type of Analysis	Principle	Measurement Range (ppm)
Chemical	Zn-Reduction-NEDA	10∿1000
	Phenol-Disulfonic-Acid	10∿300
	Ion Electrode	
Continuous	Chemiluminescence	0∿25 --- 0∿1000
	Nondispersive IR	0∿50 --- 0∿1000
	Nondispersive UV	0∿50 --- 0∿1000
	Electrochemical	0∿200 --- 0∿1000

For measurement of NH_3 in addition to other components in the duct or stack, direct inview gas analysis (DIGA) is preferred. In this method a light source is placed on one side of the stack and a detector on the other. A large tube or pipe travels between the light and detector to prevent interference. Figure 62 shows a schematic of the techniques. This method offers quick response, 5 seconds, and can be used with gas temperatures of 150 to

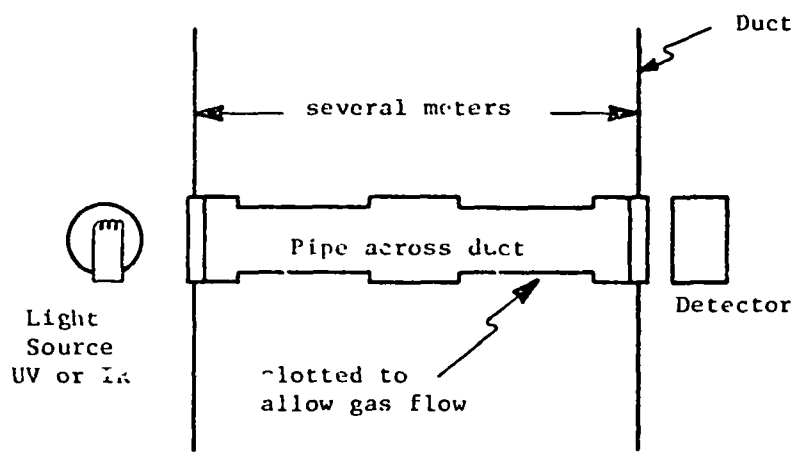

Method	Measurable Gas Components
NDIR	CO, CO_2, H_2O
NDUV	SO_2, NO, NH_3

Figure 62. Schematic of DIGA technique for continuous in-duct gas analysis.

400°C thereby making it useful for NH_3 control at the SCR reactor outlet. Also, by making a direct measurement, sampling error is eliminated. However, the accuracy of the NH_3 measurement is affected by the presence of SO_2 which causes an artificially high result. Reportedly, some modifications are necessary to counterbalance this interference. The ash from coal-fired boilers will also affect the total absorbance, however, this can be accounted for by measuring the specific wavelengths absorbed and calibrating the instrument accordingly. Tokyo Electric is supposedly using this technique for NH_3 and obtains ± 10 percent accuracy at 5 ppm NH_3 on a 100 ppm full scale instrument. CRIEPI representatives indicate that the equipment is produced in the US by Environmental Data Corporation which is a subsidary of Thermoelectron Corporation.

CRIEPI has also examined the chemiluminescent methods which use an NH_3 converter and split sample stream to measure NH_3 by difference. They have found that errors occur due to incomplete NH_3 conversion and feel that the most advanced converter systems are those manufactured by Fuji Electric, Shimadzu, and perhaps Horiba.

JAPAN ENVIRONMENT AGENCY

Headquarters

Tokyo

March 19, 1980

Taka Hiraishi, Deputy Director - International Affairs

Isamu Yokota, Deputy Director - Planning

Shigehisa Hidehira, Deputy Director - Air Pollution Control

David Mobley

Gary Jones

Doug Maxwell

Preceding page blank

JAPAN ENVIRONMENT AGENCY

The Japan Environemnt Agency is similar in regulatory function to the US EPA in that it sets ambient air quality standards that apply throughout the country. The agency also sets emission standards. Local governments have the option of adopting the national emission standards or establishing their own stricter emission standards, except for SO_x emissions.

Environmental emission standards for NO_x were first established in 1973 and have been revised three times since, most recently in August of 1979. The most recent revision covers 95 percent of the NO_x emission sources in the country. 144,000 sources are registered. The ambient air quality standards cover three levels of ambient NO_2 concentration as shown in Table 38.

TABLE 38. RANGE OF AMBIENT NO_x CONCENTRATIONS IN JAPAN

Ambient NO_x Concentration (ppm)	Number of Areas in this Range	Percent of Total Population	Percent of Total Land Area
>0.06	6	22.3	1.04
0.04-0.06	18	19.2	3.29
<0.04	Balance	58.5	95.67

The Environment Agency has set 1985 as the target date for areas with ambient NO_x concentrations >0.06 ppm to comply with the regulations by reducing the concentration to at least 0.06. A policy of nondegradation is established for areas in the 0.04 to 0.06 ppm range. The policy allows no change in the ambient concentration if there is no industrialization of the area. If there is industrialization, a significant change is allowed. "Significant" is not defined. Areas with concentration <0.04 are allowed to increase the ambient concentration to 0.04.

The Environment Agency also sets emission limits for both mobile and stationary sources. A complete list of emission standards for new and existing

Preceding page blank

sources is shown in Table 39. These national standards are based on combustion modifications for NO_x control and do not require application of SCR or thermal de-NO_x. For new, large utility boilers, an environmental assessment is required and it is anticipated that this may result in catalytic de-NO_x applications.

While the national emission standards require only combustion modifications, individual sources have to negotiate their own standard with local authorities. These locally set standards have resulted in a rapid increase in SCR installations as shown in Figure 63. By 1978, there were 58 SCR facilities and now there are 104 de-NO_x facilities including both SCR and thermal de-NO_x.

The Environment Agency indicated that Japanese gas- and oil-fired installations operate at 80 percent NO_x removal rather than 90 percent because this technology is what is commercially available and guaranteed by the process vendors. The Agency is more concerned with overall NO_x concentrations and environmental quality than with individual control efficiencies.

TABLE 39. EMISSION STANDARDS FOR NO_x IN JAPAN AS OF AUGUST 2, 1979
(Source: Japan Environmental Summary, Sept., 1979)

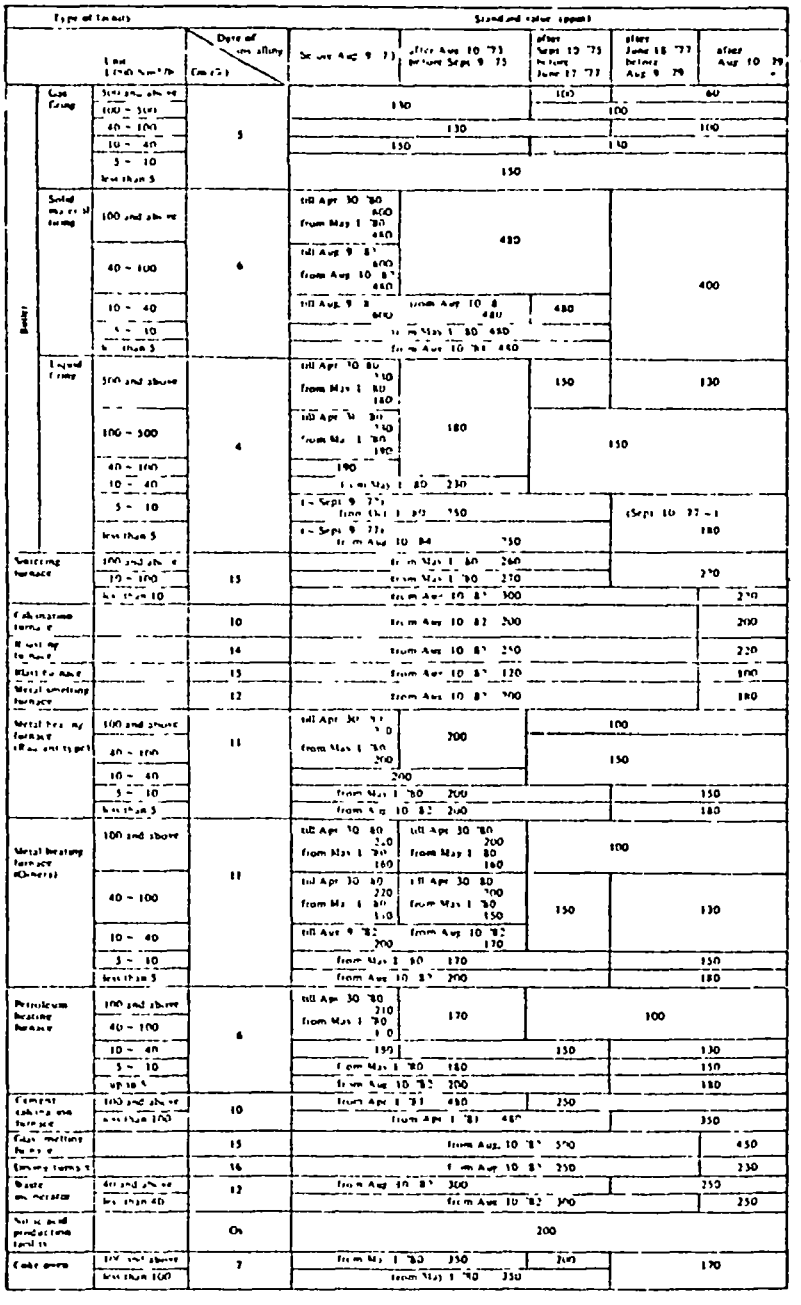

Date of Construction

Date of Enforcement and Emission Standard

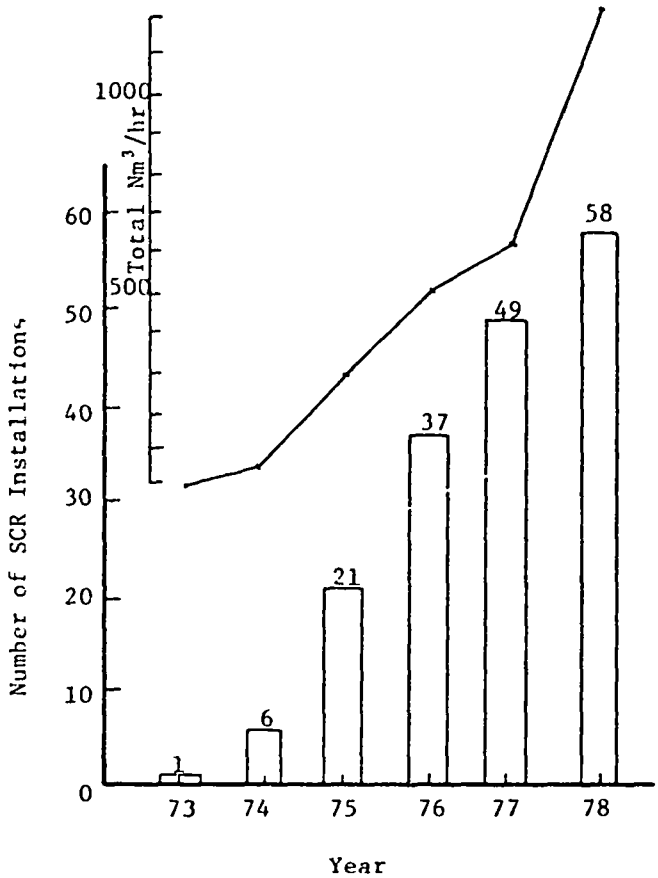

Figure 63. Growth of SCR facilities in Japan.

AICHI ENVIRONMENTAL RESEARCH CENTER

Aichi Kogai Center

Aichi Prefecture

March 17, 1980

K. Yoshimoto, General Manager

Y. Kobayashi

Y. Takai

K. Sato, Engineer

M. Noma

M. Ito

David Mobley

Jumpei Ando

Gary Jones

Doug Maxwell

AICHI ENVIRONMENTAL RESEARCH CENTER

The Aichi Research Center is a prefectural air, water, solid waste and noise quality monitoring center in charge of operation and maintenance of a large, centralized air quality monitoring network. (The Aichi prefecture includes Nagoya and the surrounding area.) The network consists of 72 remote monitoring stations and 3 movable stations that transmit information on NO_x, SO_x, hydrocarbons, CO, oxidants, and particulates to a central data processing center. In addition, some of the larger stationary sources have their own NO_x and SO_x monitors and are required to keep records. At the data processing center, the concentration and meteorological data are analyzed to determine if any area of the prefecture is experiencing air quality problems. If problems exist, the Center takes appropriate action to limit emissions in that area. For example, if high concentrations of oxidants are observed, soot and smoke emitters in the area are contacted and directed to reduce emissions as per previous agreement. The data collected by the Center is also used to make trend studies and track progress in air quality.

The people at the Aichi Research Center feel that the problem with SO_2 is almost over and that NO_x should be the next focus. Accordingly, they plan to convert the telemetry system for emission sources currently in use for SO_2 data transmission, to NO_x data transmission. Currently, the NO_x data is manually transmitted to the data processing center; however, the telemetry system transmits measurements on 30 minute intervals. The NO_x control methods currently in operation, shown in Table 40, appear to be effective in reducing the total ambient NO_x concentration (Figure 64). The large SCR and thermal de-NO_x systems are located at Chubu Electric's Chita Power Station. SCR is planned for installation at Chubu Electric's Atsumi Power Station. This system will treat flue gas from residual oil firing on a large boiler. At Atsumi, combustion modification will reduce the NO_x to 80 ppm and the SCR will lower this to 16 ppm. The Center's experience is that SCR systems are very reliable and have not caused any plant shutdowns.

Preceding page blank

TABLE 40. NO_x CONTROL TECHNIQUES IN AICHI PREFECTURE

Technique	Number of applications		
	Large boilers	Small boilers	Total
Selective Catalytic Reduction	2	2	6
Thermal de-NO_x	1	0	4
Staged Combustion, Burner	22	3	26
Staged Combustion, Over Fire Air	21	1	25
Flue Gas Pecycle	3	35	54
Low NO_x Burners	18	5	54

They have experienced instrument problems with stack gas instruments located downstream from SCR systems due to the combined pressure of NH_3, NO_x and SO_x in the flue gas. In these situations, manual methods are used rather than instruments.

Overall, the monitoring and feedback system are very successful, although a strong commitment to instrument maintenance is necessary for reliable operation. To date, there have been no violations since the companies operate with a safety factor on emission rates. Funding for the Aichi Environmental Research Center is provided by the prefectural government. This is an unusual situation however, since in all other prefectures the companies pay for the monitoring and the prefecture pays for the telemetry system.

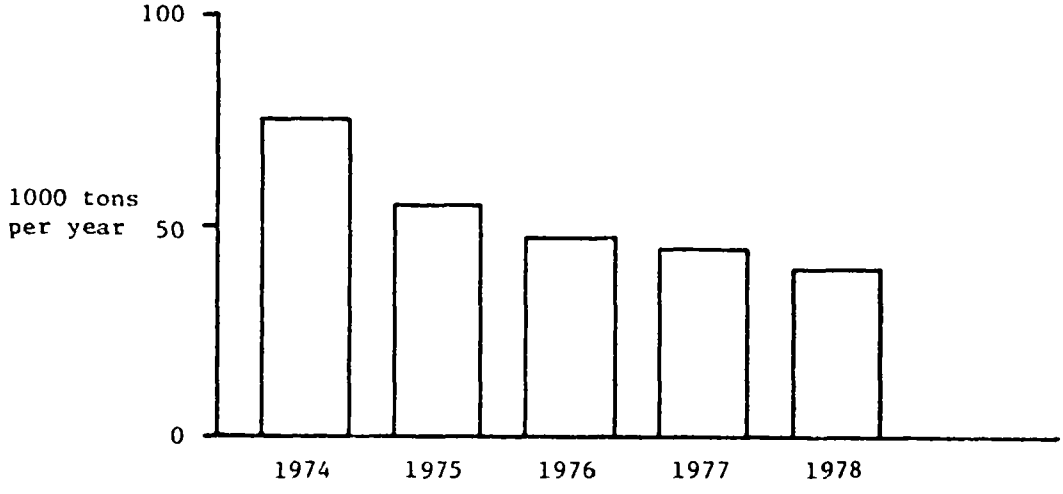

Figure 64. NO_x reduction in Aichi prefecture for the period 1974-1978.

KANAGAWA PREFECTURAL GOVERNMENT

Kanagawa Monitoring Center

Yokohama City

Kanagawa Prefecture

March 27, 1980

Yasuji Himi, Manager of Air Quality Management Division

David Mobley

Jumpei Ando

Gary Jones

Doug Maxwell

Preceding page blank

KANAGAWA PREFECTURAL GOVERNMENT

The prefectural government of Kanagawa operates an Air Pollution Monitoring Center to track emissions from all major sources in the area, monitor ambient concentrations of pollutants, and coordinate action to reduce emissions if warranted by ambient conditions. In addition to this "real-time" monitoring function the Center manages the historical data base for use in trend analysis.

In spring 1980, the ambient NO_2 concentration based on a 24-hour average, exceeded the Environment Agency's upper limit of 0.06 ppm even with all sources meeting their respective NO_x emission limitations. The prefectural government is planning to begin a program of reducing overall emissions until an ambient concentration of 0.04 ppm NO_2 is reached. This may require installation of SCR systems on the coal-fired boilers at EPDC's Isogo Power Station. Stricter emission control of all sources, including automobiles, will be considered and the level of control necessary in each area of the prefecture will be determined by analyzing the data received by the center from its remote monitoring stations.

Throughout the prefecture, there are 70 monitoring stations which measure 13 separate items. The monitoring stations include fixed location air monitors both in specific land areas and along major roads. There are also mobile monitoring stations and a meteorological monitoring tower. The primary pollutants monitored and the measurement techniques are shown in Table 41.

The output of the monitoring systems is relayed to data processing equipment in the Air Pollution Monitoring Center which analyzes and records the data as well as displaying the results on a large graphic panel. The display panel indicates pollutant concentrations at each of the monitoring stations quantitatively and also qualitatively by the color of the lamp behind each station location on the display panel map.

Preceding page blank

TABLE 41. POLLUTANT MEASUREMENT TECHNIQUES OF AMBIENT MONITORS IN KANAGAWA PREFECTURE

Pollutant	Measurement Technique
SO_2	Conductivity
NO_x	Absorptiometry (Saltzman Method)
Hydrocarbon	Gas Chromotography with Flame Ionization Detector
CO	Nondispersive Infared
Particulate	Light Scattering
Oxidants	Absorptiometry (KI Colorimetry)

When photochemical smog is anticipated or found to exist, the Center contacts high level, stationary sources and asks them to take appropriate corrective action. The Center also issues a smog notice and warning to homes via TV and radio and to schools via local administration centers. If necessary, traffic control can be initiated to limit mobile source emissions. The facility and information flow are shown in Figure 65.

The Monitoring Center has operated since 1970. The capital and operating costs to operate the Center are shown in Table 42 which indicates that the largest costs lie in the purchase and operation of the instruments and associated equipment. Major cities in the prefecture have their own monitoring systems, but the prefecture provides the systems for the smaller cities.

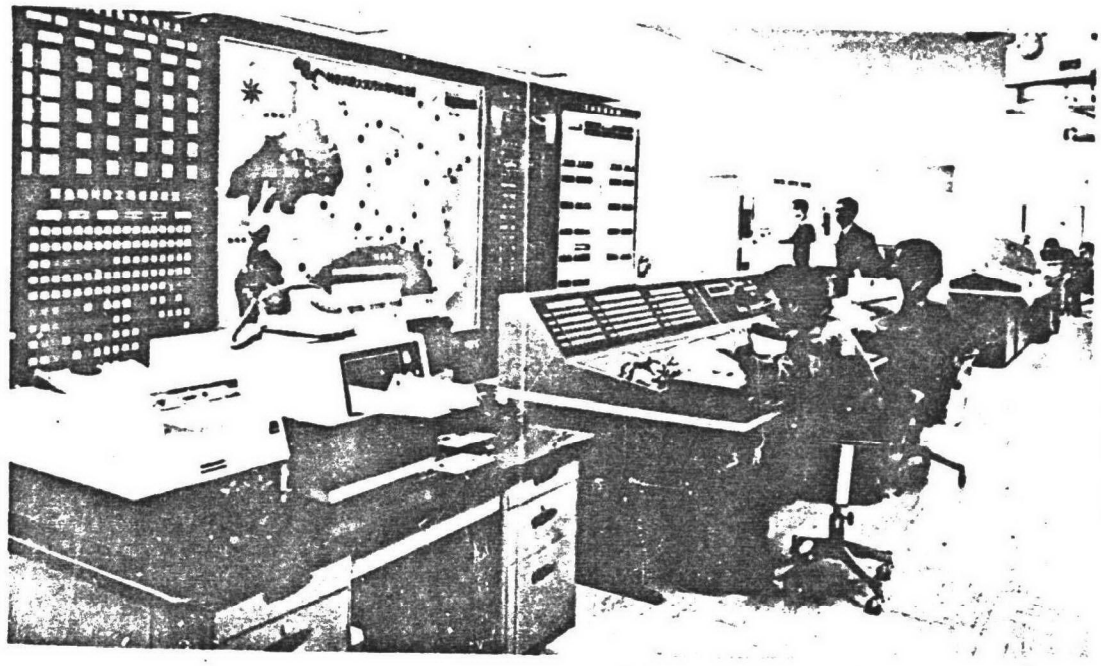

Continuous Air Pollution Monitoring System

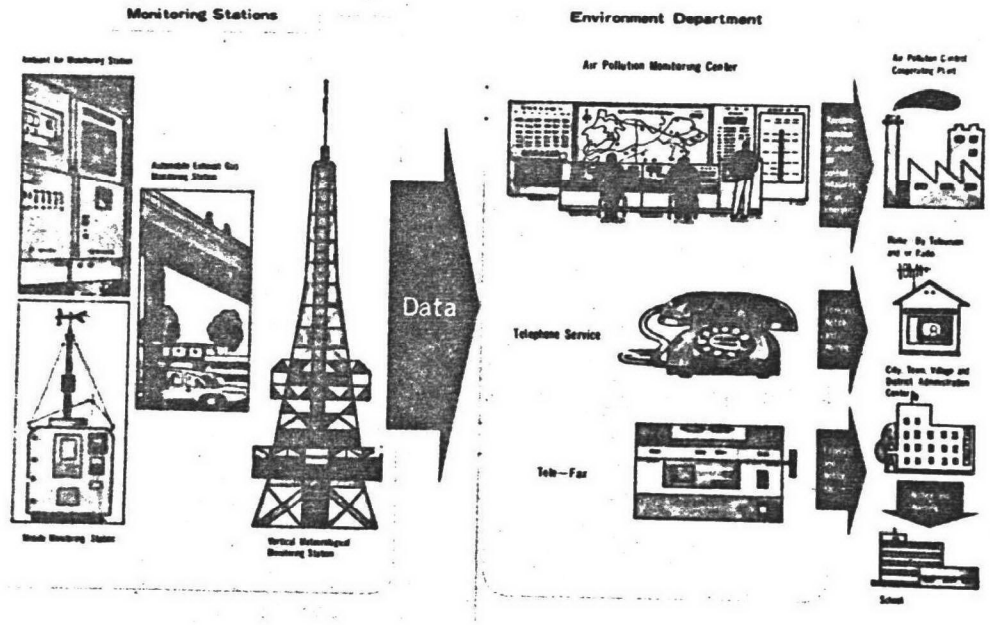

Figure 65. Air pollution monitoring center and information flow diagram.

TABLE 42. CAPITAL AND OPERATING COSTS FOR KANAGAWA PREFECTURE AIR POLLUTION MONITORING SYSTEMS (COSTS ARE PRESENTED IN THOUSANDS OF DOLLARS)

Year	Instruments		Telemetry		Other		Total, $1000
	Purchase Cost	Running Cost	Purchase Cost	Running Cost	Purchase Cost	Running Cost	
1970	1624	-	23	-	50	-	1,697
1971	307	109	169	22	-	1	608
1972	192	144	670	26	154	2	1,188
1973	172	220	947	13	-	9	1,361
1974	144	176	74	23	4	30	451
1975	21	326	-	123	-	35	505
1976	29	304	-	133	-	35	501
1977	455	361	-	158	32	33	1,039
1978	672	361	-	160	8	36	1,237
1979	301	399	213	149	7	39	1,108
1980	166	444	402	141	-	39	1,192
Total	4,083	2,844	2,498	948	255	259	10,887
Total	6,927		3,446		514		10,887

(Dollar amounts based on exchange rate of ¥220 per $1.)

YOKOHAMA CITY POLLUTION CONTROL BUREAU

Yokohama

Kanagawa Prefecture

March 27, 1980

Katsumi Saruta, Director General

Koichi Ishikawa, Vice Manager

David Mobley

Jumpei Ando

Gary Jones

Doug Maxwell

YOKOHAMA CITY POLLUTION CONTROL BUREAU

Yokohama is located near Tokyo and is the capital of the Kanagawa Prefecture. The area is highly industralized and, on some days, photochemical smog is severe enough that warnings are issued. Since the smog is a result of atmospheric NO_x and hydrocarbons, the City's Pollution Control Bureau has a program to reduce the average level of NO_x emission from all stationary sources. A similar program for reducing hydrocarbon emissions has been completed. The monitoring center facility is shown in Figure 66.

In terms of NO_x emissions there are 1165 plants classified as emission sources as of December 1978. 82 of these are large plants (>1 kl/hr of oil consumption) and of these 13 (Table 43) account for 95 percent of the total NO_x emissions.

TABLE 43. MAJOR EMISSION SOURCES IN YOKOHAMA CITY

Emission Source	Number
Power Stations	
coal	1
oil	1
LNG	1
Oil Refineries	3
Gas Smelters	2
Petrochemical Plants	1
Alumina Plants	1
Others	3

The City has established the goal of reducing NO_x emissions to 36 percent of the 1973 level by 1985. This is equivalent to a daily average ambient concentration of 0.04 ppm NO_2. To accomplish this objective they will request the emission reduction shown in Table 44.

Preceding page blank

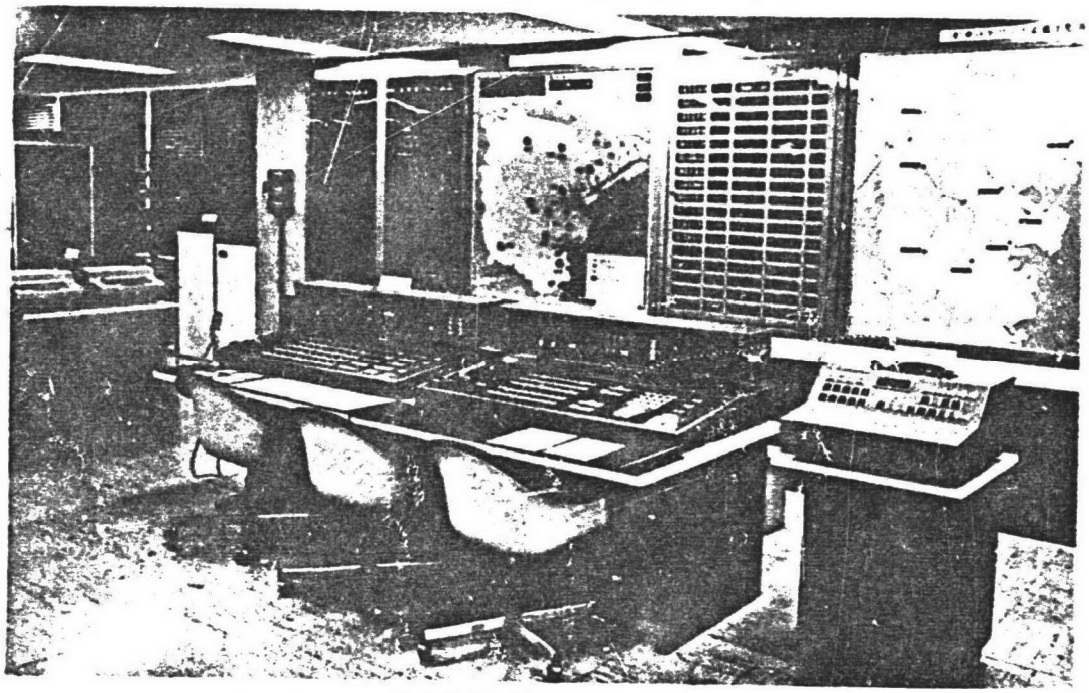

Figure 66. Yokahama City pollution monitoring center.

TABLE 44. EMISSION REDUCTION REQUESTED BY YOKOHAMA CITY TO MEET 1985 TARGET

Sources	Requested Emission Reduction (Based on 1974 Levels)
13 Major Sources	70%
69 Large Sources	50-70%
1083 Other Sources	30%

In terms of ppm concentrations, this means that emissions from coal-fired boilers will be about 160 ppm and those from oil-fired boilers will be about 40 to 50 ppm for power stations.

In order to meet the goal, it will also be necessary to reduce emissions from mobile sources to 30 percent of the 1974 levels. Currently, all gasoline powered cars have 90 percent NO_x control; however, this is not the case for trucks and diesel powered passenger cars. The City cannot act directly on mobile source emissions since that authority lies with the Central Government.

In fact, the emission regulations that are enforced by law are those of the Environmental Agency, although some enforcement can be made based on Perfectural Ordinance. If more stringent emission limitations for stationary sources are desired on the local level, they are achieved through a cooperative spirit between industry, local government and the people. There is no active enforcement of the regulations because, in almost every case, the regulations are met by industry to insure the goodwill between all parties. In the few cases where emission limitations were exceeded, the news media swayed public sentiment against the violators and this was sufficient to convince these sources to change their policies. In the spirit of cooperation, the local authorities will not require emission reductions that do not appear to be technically feasible.

APPENDIX D

JAPANESE SCR PROCESS VENDOR CONTACTS AND US AFFILIATES

Preceding page blank

PRINCIPAL VENDOR CONTACTS FOR JAPANESE NO_x
SELECTIVE CATALYTIC REDUCTION TECHNOLOGY

Process	Japan Representative	U.S. Licensee or Partner
Babcock-Hitachi (Hitachi, Ltd.)	Hiroshi Kuroda Kure Works. Babcock-Hitachi K.K. No. 6-9 Takara-Machi Kure-shi, Hiroshima-Ken, 737, Japan (0823) (21) 1161 Telex 6624-21 BHK KRE-J	Greg T. Bielawski Babcock and Wilcox FPG-ESC P. O. Box 351 Barbarton, Ohio 44203 216/753-4511
Hitachi-Zosen (Hitachi Shipbuilding and Engineering)	Hideya Inaba Hitachi Shipbuilding & Engineering Co., Ltd. Palaceside Building 1-1, Hitotsubashi, 1-Chome Chiyoda-Ku, Tokyo, Japan Tokyo (213) 6611 Telex J22363 • J24490	Phil Winkler Chemico Air Pollution Control One Penn Plaza New York, NY 10001 212/239-5344
Ishikawajima-Harima Heavy Industries (IHI)	Nobuo Aoki Ishikawajima-Harima Heavy Industries Co., Ltd. Tokyo Genboku Kaikan 30-13 • 5-Chome, Tokyo Koto-Ku, Tokyo, 135, Japan (03) 649-1111 Telex (IHI CO) J22232	John Cvicker Foster Wheeler Energy Corp. 9 Peach Tree Hill Road Livingston, NJ 07039 201-533-2687
Kawasaki Heavy Industries (KHI)	Senji Niwa Kawasaki Heavy Industries, Ltd. 14, 2-Chome Higashikawasaki-Cho Ikuta-Ku, Kobe, 650-91, Japan Tel. Kobe (078) 671-5001 Telex 5624-032 KHI CPL J	Lee Coe Joy Manufacturing Western Precipitation Div. P. O. Box 2744 Los Angeles, CA 90051 213/240-2300
Mitsubishi Heavy Industries (MHI)	Tadamasa Sengoku Mitsubish Heavy Industries, Ltd. Shin-Tamachi Bldg. 34-6, Shiba 5-Chome Minato-Ku, Tokyo 108 Japan (03) 455-5711 Telex J22282 HISHIJU J28578 MHITAM	Donald J. Frey Manager, Fuel Systems Engineering CE Power·Systems Combustion Engineering, Inc. 1000 Prospect Hill Road Windsor, Conn. 06095 203/688-1911 Ext. 2241 Telex 99297

Preceding page blank

END

DATE

FILMED

5-22-81

NTIS