United States
Environmental Protection
Agency

Corvallis Environmental
Research Laboratory
Corvallis, Oregon 97330

EPA

# A REVIEW OF THERMAL PLUME MODELING

CERL-048

SEPTEMBER 1978

# A REVIEW OF THERMAL PLUME MODELING

CERL-048

SEPTEMBER 1978

EPA ERL-Corvallis Library
00002185

# A REVIEW OF THERMAL PLUME MODELING

by

L. R. Davis
Oregon State University, and
Corvallis Environmental Research Laboratory
Corvallis, Oregon 97330

and

M. A. Shirazi
Corvallis Environmental Research Laboratory
Corvallis, Oregon 97330

LIBRARY
U S Environmental Protection Agency
Corvallis Environmental Research Lab.
200 S W 35th Street
Corvallis, Oregon 97330

Keynote Address Presented at 6th
International Heat Transfer Conference
Toronto, Canada August, 1978

CORVALLIS ENVIRONMENTAL RESEARCH LABORATORY
OFFICE OF RESEARCH AND DEVELOPMENT
U.S. ENVIRONMENTAL PROTECTION AGENCY
CORVALLIS, OREGON 97330

# A REVIEW OF THERMAL PLUME MODELING

L. R. Davis, Professor[1]
M. A. Shirazi, Environmental Scientist[2]

[1] Oregon State University, Corvallis, Oregon
[2] U. S. Environmental Protection Agency, Corvallis, Oregon

## ABSTRACT

A review of the state-of-the-art of thermal plume modeling techniques is presented with emphasis on power plant discharges. Models are considered for single and multiple port discharges applicable to water and atmospheric plumes. Representative examples of each type are presented with discussion. References to other relevant works are cited when appropriate.

## NOMENCLATURE

$a_i$ = coefficients in entrainment functions
$b$ = characteristic radius of submerged plume, m
$B$ = characteristic half width of surface plume, m
$c_p$ = specific heat at constant pressure, J/kgK
$C_i$ = species concentration, kg/m$^3$
$D$ = jet diameter, m
$E$ = entrainment, m$^2$/s
$F$ = $g'U_oR_o^2$, buoyancy flux used in Brigg's equations, m$^4$/s$^3$
$F_D$ = specific drag force, m$^3$/s$^2$
$F_m$ = $U_o^2R_o^2$, momentum flux in Brigg's equations, m$^4$/s$^2$
$F_L$ = local Froude number defined in equation (23)
$F_o$ = discharge densimetric Froude number
= $U_o/(g'D)^{1/2}$(suubmerged discharge)
= $U_o/(g'H_o)^{1/2}$(surface discharge)
$\bar{F}$ = body force in equation (2)
$g$ = acceleration of gravity, m/s$^2$
$g'$ = $g(\rho_a - \rho)/\rho = g\Delta\rho/\rho$, m/s$^2$
$K$ = specific surface heat transfer coefficient, m/s
$\ell$ = Prandtl mixing length, m
$L$ = spacing between discharge ports, m
$n$ = horizontal surface plume coordinate, Figure 7
$N$ = number of discharge ports
$P$ = pressure, N/m$^2$
$\bar{P}$ = plume perimeter in equation (37)
$q$ = vapor content kg/m$^3$
$Q$ = volume flux, m$^3$/s
$r$ = radial coordinate
$R$ = velocity ratio, $U_a/U_o$

$R$ = plume radius, m
$s$ = plume coordinate along centerline, m
$S$ = $g(dT_a/dz)/T_a$, stratification stability parameter, $s^{-2}$
$T$ = temperature, K
$t$ = time, s
$U$ = time average velocity in s direction, m/s
$|U|$ = absolute plume velocity relative to ambient current
$v$ = time average velocity normal to s direction
$V$ = vector velocity
$W$ = equivalent slot width, $\pi D^2/(4L)$, m
$x,y,z$ = rectangular coordinates
$\alpha$ = entrainment coefficient
$\Delta$ = excess above ambient value
$\Gamma$ = adiabatic lapse rate, K/m
$\eta$ = coordinate defined on Figure 6, m
$\theta$ = flow angle, $\theta_1$ in horizontal plane relative to ambient current, $\theta_2$ in vertical plane relative to horizontal
$\nu$ = eddy diffusivity, $m^2/s$
$\zeta$ = coordinate defined on Figure 6, m
$\rho$ = mass density, $kg/m^3$
$\sigma$ = liquid moisture content, $kg/m^3$
$\sigma_y$, $\sigma_z$ = horizontal and vertical standard deviation of gaussian distribution
$\phi$ = energy dissipation function

Subscripts

a = ambient conditions
c = plume centerline conditions
o = conditions at discharge
r = variable depends on coordinates s, n, and z

## INTRODUCTION

The main by-product of electrical power generation is waste heat. For every kW of electricity generated, about 2.0 kW of waste heat is produced. If energy consumption continues as predicted (1), by 1990 there will be the equivalent of 1200-1000MW power plants required to generate the required electricity. The cooling water passing through the condensors of these plants will equal twice the combined flows of the Mississippi, Columbia, and Saint Lawrence rivers, elevated 10 C above their natural temperatures.

The two main methods presently used to dispose of this waste heat are once-through cooling and a closed loop cooling system using cooling towers. In a once-through cooling system, water is withdrawn from a supply source such as a river, lake, or the ocean, passed through condensors where it is heated, and returned directly to the source. The method of returning this heated water to the receiving body is of considerable interest because of potential environmental effects that might result. Submerged discharges through a single high velocity jet cause rapid mixing of the warm water with the cooler receiving water. Thus, the higher temperatures occur in a rela-

tively small mixing zone near the discharge but a large amount of receiving water will be heated in excess of natural temperatures by a small amount. This process can be enhanced further by using several smaller discharge ports in a multiport diffuser. In contrast, discharge at the surface of the receiving water through an open canal causes the heated water to float with only moderate mixing with the receiving water. This produces elevated surface temperatures and enhances the exchange of heat directly with the atmosphere. In shallow water even a submerged discharge produces elevated surface temperatures due to inadequate mixing.

If direct discharge into the receiving water cannot be designed to meet environmental restrictions, normally stated in terms of elevated surface temperatures, closed cycles are used. In these systems the cooling water is recycled back and forth between the condensor, cooling tower, spray system, or cooling pond whichever is deemed more appropriate.

Regardless of the method, the disposal of power plant waste heat usually results in a large thermal plume either in water or in air, each with distinctive characteristics. The ability to accurately predict these characteristics is essential in assessing the environmental effects of waste heat from power plants. As a result, extensive theoretical and experimental work has been done to develop and improve prediction methods. It is the object of this paper to review the state-of-the-art of thermal plume prediction, primarily from once-through cooling systems and closed systems using wet cooling towers.

It is impossible to discuss all the literature that exists on this subject in such a short paper. Therefore, the authors have limited this paper to a few representative examples and refer without further discussion to other works which may be equally as relevant for certain applications.

## WATER PLUMES

### Submerged Jets

The terms "jets" and "plumes" are often used interchangably, however, it is generally understood that the term "jet" or "forced plume" applies to that region where the momentum of the discharge cannot be neglected, usually near the source. The term "plume" is applied to that region where the discharge momentum contributes little to the total momentum of the plume. This usually occurs some distance downstream. In this paper the terms plume, buoyant jet, etc., are used to refer to the entire discharge system.

Analyses of buoyant jets cover a wide variety of discharge applications, both in the atmosphere such as cooling tower and stack discharges and in water. The main differences are the scale and nature of turbulence and stratification encountered in aquatic and in atmospheric environments. Also a major consideration distinguishing one medium from another is the use of an appropriate equation of state and the consideration of water vapor in atmospheric plumes and salinity in aquatic plumes.

It has been found that one of the main scaling parameters in thermal plume modeling is the densimetric Froude number which is the ratio of the discharge momentum to buoyancy flux. It is expressed in various forms and defined in this paper as $F_o = U_o(g'D)^{-1/2}$ where $U_o$ is the discharge velocity through port diameter, D, and $g'$ is the modified buoyancy $g\Delta\rho_o/\rho$. A high Froude number implies high momentum and a low Froude number implies high buoyancy.

The general characteristics of the submerged discharge of a buoyant fluid are shown in Figure 1. The profiles of velocity, concentration, temperature, etc. at discharge are usually uniform or "top hat" in shape. The shear layer separating this fluid from the ambient grows from a negligibly small size to the full width of the plume along the zone of flow establishment. The central core of uniform properties no longer exists beyond this development length. At this point the zone of established flow begins and the profiles are bellshaped curves (2). Due to the different diffusion rates of momentum and mass, velocity and concentration development lengths are slightly different. A simplified analysis (3) of the development length for a round jet with no ambient current shows that the centerline excess temperature and density deficiency have already decreased to about 87% of their discharge values at the end of the velocity development length. Beyond the development zone the plume profiles will remain similar, spreading in width and decreasing in centerline velocity and concentration. Interaction with the free surface or other boundaries, merging of neighboring plumes, or the encounter with ambient currents introduce changes in the decay rate and are the cause of considerable analytical complications.

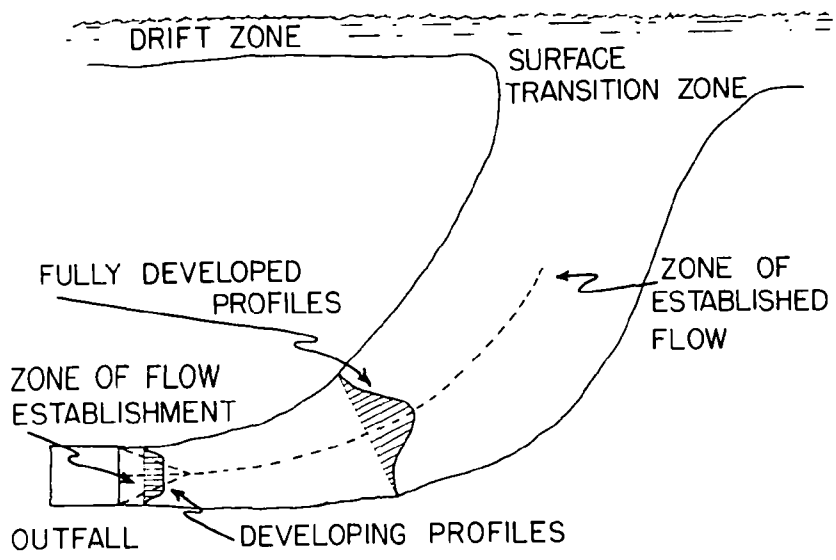


Figure 1 General characteristics of subjerged buoyant discharges.

The surface encounter problem is not easy to handle. The most successful methods have been through physical or numerical models. Most physical model studies have been directed toward a particular installation and have included

bottom topography and shore boundary effects. Examples of these can be found in (4), (5), (6), (7). Other laboratory studies of discharges into shallow water can be found in (8), (9), (10). Plume merging is handled in a variety of different ways. Some of these are considered in the particular models discussed below. Plume profile distortion due to ambient current is shown on Figure 2. Instead of being Gaussian-profiles, twin vorticies are formed at the edges of the plume due to the shearing action of the current. These vorticies cause the plume to develop a horseshoe shaped profile (11) and in some cases to separate into two separate plumes. In most integral analyses, this horseshoe shaped profile is ignored and Gaussian similarity is assumed throughout. As a result, they only give predictions in the mean.

Buoyancy, stratification, and ambient current (wind) have considerable effect on plume dynamics. Buoyancy always tends to bend the plume in the direction of the buoyant force. Ambient stratification often causes the plume to be trapped at a level of neutral buoyancy as shown in Figure 3. This may occur with even the slightest stratification if discharge is deep enough. Current always bends the plume downstream regardless of the magnitude and can never be neglected in determining trajectory.

Submerged thermal plumes have been investigated for decades in such early works as Reichardt (2), Schmidt (12), Albertson, et al. (13), Rouse, et al. (14), Brooks (15), Morton, et al. (16), Priestly and Ball (17), Abraham (18) and many others. Among the more recent contributions are Fan (11), Hoult, et al. (19), Fox (20), Hirst (21), (22), Kannberg and Davis (23) (24), Chen and Rodi (25) (26), Madni and Pletcher (27), Oosthuizen (28), Hwang and Pletcher (29), Schatzmann (20), Kostovinos (31), Davis, et al. (32). Excellent reviews can be found in (33), (21), (25). Earlier work concentrated on vertical discharges in an environment without ambient current. It was found that for high Froude number discharges (momentum jets) the velocity and concentration both decayed with the inverse of distance (13). For buoyant plumes with low discharge Froude number the velocity was found to decay as $x^{-1/3}$ and concentration as $x^{-5/3}$ (14). In a recent study of vertical buoyant discharges, Chen and Rodi (25), (26) correlated the data of several researchers and found their correlations to agree with these earlier results. In addition they added an intermediate zone and defined the limits of use of each.

The governing equations which describe conditions throughout the discharge field are the transport equations of mass, momentum, energy, and species. These conservation equations can be written in vector form as:

Mass,

$$\frac{\partial \rho}{\partial t} + \nabla\cdot(\rho\bar{V}) = 0 \qquad (1)$$

Momentum,

$$\frac{\partial \bar{V}}{\partial t} + \frac{1}{2}\bar{\nabla}\bar{V}^2 - \bar{V}x(\bar{\nabla}x\bar{V}) = \frac{-\bar{\nabla}P + \rho\bar{F}}{\rho} + \nu\bar{\nabla}^2\bar{V} \qquad (2)$$

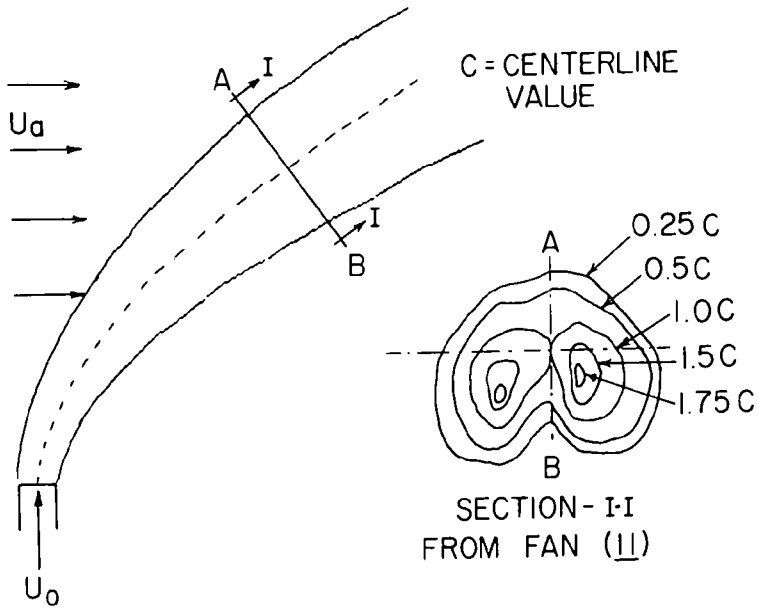


Figure 2. Plume vortex motion caused by ambient current.

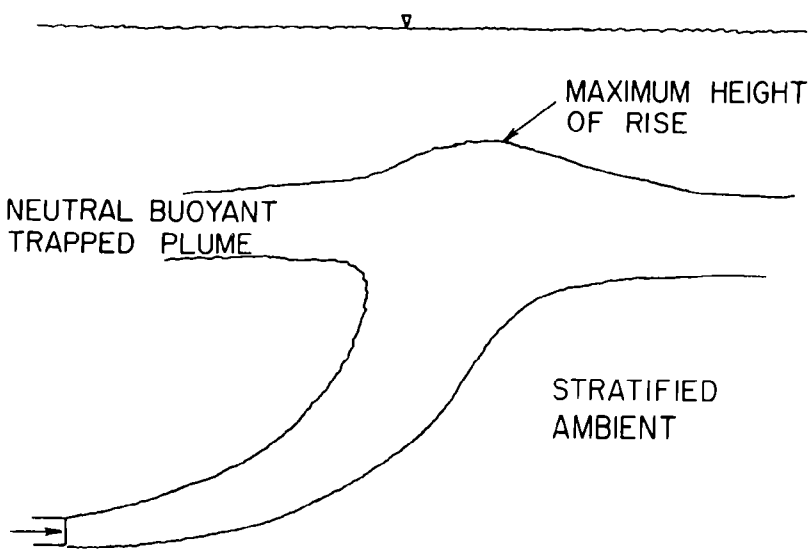


Figure 3. The effects of stratification on plume rise.

Energy,

$$\frac{\partial T}{\partial t} + \bar{V}\cdot(\bar{\nabla}T) = \frac{1}{\rho c_p}\,\bar{\nabla}\cdot(k\bar{\nabla}T) + \frac{\nu}{c_p}\,\Phi - T\left(\frac{\partial P}{\partial T}\right)_\rho(\bar{\nabla}\cdot\bar{V}) \qquad (3)$$

Species concentration,

$$\frac{\partial C}{\partial t} + \bar{V}\cdot(\bar{\nabla}C) = \bar{\nabla}\cdot(D_c\bar{\nabla}C) \qquad (4)$$

In addition there is the equation of state relating density to temperature, species concentration, and pressure. Due to the difficulty in solving these equations, a number of simplifying assumptions are usually introduced. The most common assumptions are:

1) steady flow,
2) the flow field is fully turbulent, molecular diffusion is neglected,
3) density variations appear only in the buoyanct terms (Boussinesq approximation).
4) pressures are purely hydrostatic,
5) boundary layer approximations may be applied in the jet.

Additional assumptions are applied when specific cases are considered. Morton, et al. (16) in a now classic paper following the lead by Taylor (42) integrated the simplified governing equations over the plume crosssection and assumed that the fluid entrained into the plume to be linearly proportional with the plume size, b, and centerline velocity, $U_c$. This entrainment hypothesis has been successfully used by many others in approximating the exchange mechanism between the plume and ambient.

The work by Fan (11) was a significant contribution to the understanding of buoyant discharges from a single source. He experimentally investigated the effects of ambient current and stratification on buoyant plume characteristics. He considered a wide range of discharge Froude numbers, ambient velocities, and ambient density gradients. He also presented an integral analysis similar to Morton et al. in which he assumed axisymmetric similar profiles along the length of the developed zone of the plume. He considered two cases: one where an ambient current caused the jet to bend over and a second for discharge at an arbitrary angle into a stratified stagnant ambient. A form of this latter model (3) was used to develop the nomograms for the stagnant cases in reference (34). In these models the development zone calculations were approximated by first assuming a development length after Albertson, et al. (13) of 6.2 jet diameters, tophat profiles at discharge, gaussian profiles at the end, and ignoring buoyancy effects on momentum. The models predict plume trajectory, size, and excess temperature decay. From the trajectory information the maximum height of rise in a stratified ambient can be determined. The stagnant ambient model predictions agreed well with data, but the drag coefficient in the model with current had to be varied in order to achieve good trajectory predictions.

Hirst (21) (22) developed an integral model for round, buoyant jets discharged into flowing, stratified ambients. He used a two angle "natural" coordinate system allowing for discharge at any horizontal or vertical angle relative to the ambient current producing a three-dimensional trajectory. Since the model considered current, stratification and varying discharge angles, it proved to be very useful for many practical cases. It is limited, however, to single plumes without bottom or surface encounter. The equations in integral form become:

Conservation of mass,

$$\frac{d}{ds}\int_0^\infty \bar{U} r dr = -\lim_{r\to\infty}(r\bar{v}) = E \tag{5}$$

Conservation of energy,

$$\frac{d}{ds}\int_0^\infty \bar{U}(\bar{T} - \bar{T}_a)\, r dr = -\frac{dT_a}{ds}\int_0^\infty \bar{U} r dr - \lim_{r\to\infty}\overline{rv'T'} \tag{6}$$

Conservation of S-momentum,

$$\frac{d}{ds}\int_0^\infty \bar{U}^2 r dr = U_a\, E \sin\theta_1 \cos\theta_2 + \int_0^\infty g' r dr \sin\theta_2 - \lim_{r\to\infty}(\overline{ru'v'}) \tag{7}$$

The other momentum equations may be arranged to form the curvature equations:

$$\frac{d\theta_2}{ds} = \left[\int_0^\infty g' r dr \cos\theta_2 - EU_a \sin\theta_1 \sin\theta_2\right] / \bar{q} \tag{8}$$

$$\frac{d\theta_1}{ds} = \frac{EU_a \cos\theta_1}{\bar{q}\cos\theta_2} \tag{9}$$

where r is a radial coordinate perpendicular to the plume centerline, s is the axial coordinate along the trajectory, the direction of plume flow, E is the entrainment rate, $\bar{U}$ is the total (excess plus ambient) velocity in the s direction, v is the velocity in the r direction, T is temperature, $\theta_2$ is the plume inclination relative to the horizontal, $\theta_1$ is the plume horizontal flow direction relative to the ambient current (ambient flow is at 90°), and g' is the buoyancy flux term. The bars indicate time average values and the primes indicate ambient fluctuating components. The term $\bar{q}$ is a momentum term given by

$$\bar{q} = \int_0^\infty \bar{U}\, r dr - \frac{E^2}{4} - \lim_{r\to\infty}(r^2\overline{v'^2}) \tag{10}$$

Since the velocity term used in the continuity equation includes both the excess velocity and the ambient current component in the s direction, the entrainment function, E, accounts for both aspirated fluid entrainment as well as forced entrainment caused by impingement with the ambient current. Hirst developed his entrainment function by considering the mechanical energy equation along with continuity and momentum to derive a form of the function

which accounted for buoyancy effects on entrainment using the technique of Fox (10) and then added terms to account for ambient velocity following the ideas of Platten and Keffer (35) and Hoult, et al. (19). The resulting function with suggested coefficients is given by,

$$E = (0.057 + 0.97 \sin \theta_2/F_L) \; b \; [|U| + 9.0 \, U_a(1 - \sin^2\theta_1 \cos^2\theta_2)^{1/2}] \quad (11)$$

where $F_L$ is a local Froude number and $U$ is the absolute excess velocity in the plume as compared to the ambient. Hirst evaluated the integrals in equations (5)-(10) assuming Gaussian profiles in the zone of established flow and a composite tophat central core attached to Gaussian shaped shear layers on each side in the zone of flow establishment. The equations were then solved numerically for plume growth, dilution and trajectory.

Since proven functions for the ambient turbulence terms were not available, they were eventually ignored. Hirst's model agrees fairly well with a wide variety of experimental data both in the development zone and zone of established flow, except for discharge in the direction of ambient flow (co-flow discharge). In this case slightly different trends are predicted by the model than are observed (36). Ginsberg and Ades (37) show that a much better prediction of trajectory is obtained with Hirst's model if the last coefficient in the entrainment function, instead of being constant at a value of 9.0, is made a function of the discharge Froude number and velocity ratio according to:

$$a_5 = 25.81 \, [F_o^{0.195} \; R^{-0352}] - 10.83 \quad (12)$$

where $R = U_o/U_a$.

Schatzmann (30) in a recent work presented a plume model patterned after Hirst's in which several improvements are proposed. He does not invoke the Boussinesq approximation and derives his working integral equations in what he claims to be a more mathematically correct way than previous workers. However, it is written with no $\theta_1$ dependence which is set to 90° yielding a two-dimensional trajectory. His entrainment is different from Hirst's with the addition of a modifying term in the denominator. The resulting function is,

$$E = \frac{(a_1 + a_2 \sin \theta/F_L)b}{K'} [\, U \; + a_4 U_a \sin\theta]$$

$$\text{where } K' = 1 + [a_3 U_a \cos \theta] \, /2|U| \quad (13)$$

and the a's are empirically determined coefficients. In Schatzmann's analysis, this entrained fluid only changes mass flow due to the excess velocity whereas Hirst's includes the ambient current's contribution to total flow. The difference between the predictions of Hirst's and Schatzmann's models is small for most cases. A typical comparison with Fan's data is shown on Figures 4 and 5 for trajectory and dilution.

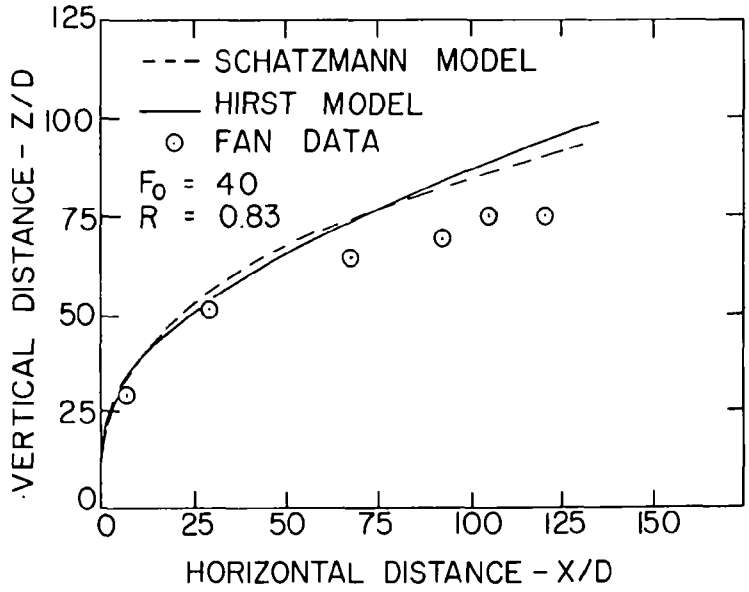


Figure 4 A comparison of the model predictions for trajectory of Hirst (21) and Schatzmann (30) as compared to Fan's data (11)

Multiple Port Discharges: The merging of multiple plumes has been handled by either 1) assuming that a line of single round jets instantaneously becomes a slot jet at some calculated merging location (3); 2) making an "equivalent slot" of the multiple discharges at the source (9); or 3) by considering the detailed dynamics of a gradual merging process using assumed merging profiles (38), (24). The first technique proved to be a good approximation but to satisfy conservation of mass, momentum, and energy through transition, the centerline velocity and temperature had to be discontinuous (34).

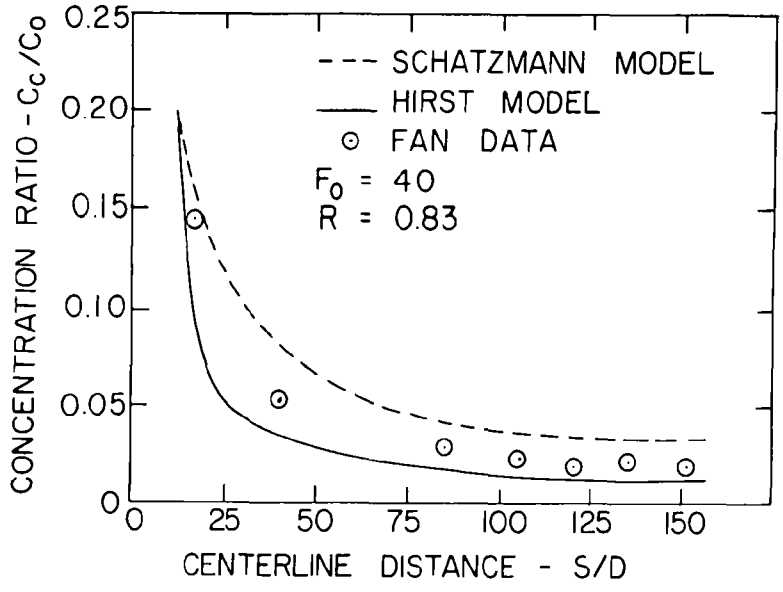


Figure 5 A comparison of the model predictions for dilution of Hirst (21) and Schatzmann (30) as compared to Fan's data (11).

The equivalent slot concept is a useful approach in analyzing the characteristics of certain multiport discharges, but as with most simplified analyses, the limits of use should be understood. The fundamental premise behind the equivalent slot is that beyond the point of merging, the plumes from a row of equally spaced jets become the same as the plume from a slot jet having the same mass and momentum flux per unit length as the multiple jets. The width of the equivalent slot under these conditions becomes:

$$W = \pi D^2/(4L).$$

This presumes that up to the point of merging, the mixing mechanisms of the two are the same, and of course they are not. The effect of this difference on the ultimate diluation is substantial when a major portion of the dilution occurs before merging. Otherwise, the approximation is useful for large distances away from the point of discharge or for closely spaced discharge ports.

The gradual merging approach developed by Davis (38) uses analysis due to Hirst as a start and incorporates a merging process where neighboring plumes are superimposed as shown in Figure 6. The profiles in this merging zone are based on the requirement that along the line connecting plumes, the profile should be smooth in all directions, the slope should be zero at $\zeta$ = 0 and L/2, the profiles should be the superposition of the single profiles where applicable with no point allowed to exceed centerline properties, and they should maintain the characteristics of similar profiles along the plume centerline. For example the temperature profile during merging is given by,

$$\Delta T = \Delta T_c \left[1 - \left(\frac{\zeta}{b}\right)^{2/3}\right]^2 \left[1 - \left(\frac{\eta}{c}\right)^{3/2}\right]^2 \text{for } 0 \leq \zeta \leq L-b$$

and,

$$\Delta T = \Delta T_c \left\{\left[1 - \left(\frac{\zeta}{b}\right)^{3/2}\right]^2 + \left[1 - \left(\frac{L-\zeta}{b}\right)^{3/2}\right]^2\right\}\left[1 - \left(\frac{\eta}{c}\right)^{3/2}\right]^2 \quad \text{for } L-b \leq \zeta \leq L/2 \qquad (14)$$

where $c^2 = [b^2 + \zeta^2$, $\Delta T_c$ is the centerline excess temperature at $\zeta = \eta = 0$, b is the plume half width, and L is the distance between ports. The coordinates $\eta$ and $\zeta$ are defined in Figure 6. Appropriate profiles of the same form were assumed for velocity and concentration. The entrainment function used is similar to that used by Hirst, but it also includes the effects of plume competition before merging and variable entrainment surface during merging. For example the entrainment function used during merging is given by,

$$E = \left[a_1 + \frac{a_2}{F_L}\right] \left[b|U| \left(1 - \frac{2}{\pi} \cos^{-1} \frac{L}{2b}\right) + a_3 U_a \frac{L}{2} \sin \theta\right] \qquad (15)$$

A drag term was introduced into the model to account for the additional bending observed in multiple port discharges as compared to single discharges. A comparison of this model with limited data indicates good agreement and smooth predictions throughout the merging zone (24).

All three of the above techniques for handling merging ignore end effects and thus, are applicable to long diffusers. It has been observed (32, 39) that a plume from short diffusers does not retain its initial elongated crosssection but becomes essentially circular within about four diffuser lengths from discharge. This phenomonen is not handled in any of the existing models and is at present best considered using physical models.

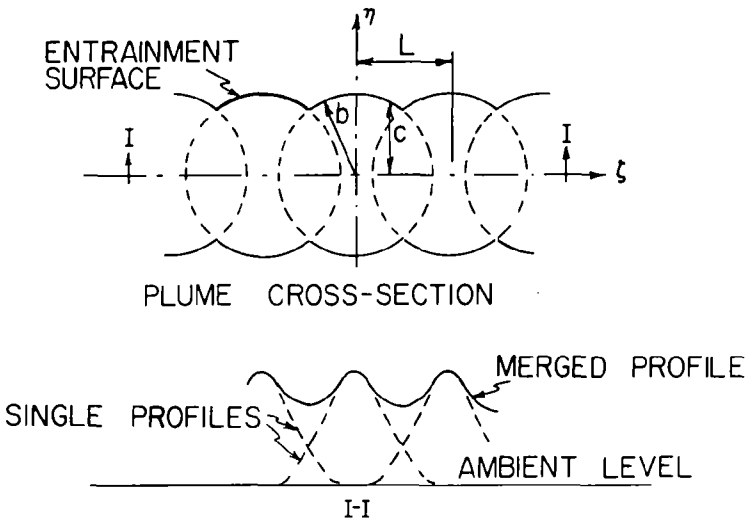


Figure 6. Superposition of plumes used in the Davis (38) model.

A truly two-dimensional diffuser is a line source or long slot jet. A slot jet can be treated analytically using a two-dimensional version of round jet theory with an appropriate entrainment function. Slot jets have been studied both experimentally and analytically by numerous authors (9,31, 40). In a recent study, Kotsovinos (31) performed a detailed investigation of slot jet discharges giving velocity, temperature, and turbulence structure profiles along the trajectory of the plume. Jirka and Harleman (9) and Cederwall (40) investigated slot discharges in shallow water.

Surface Discharge

The discharge of warm water from a canal to the surface of a receiving body of water creates several complexities absent in submerged discharge. One is the surface spreading phenomenon that causes the plume to be asymmetric. The other is heat exchange with the atmosphere at the surface. Figure 7 is a sketch of a typical surface plume with a plan, and cross-sectional view. Buoyancy causes the central portion of the plume to rise more than the edges. This creates buoyant spreading as well as different entrainment rates in the vertical and horizontal directions.

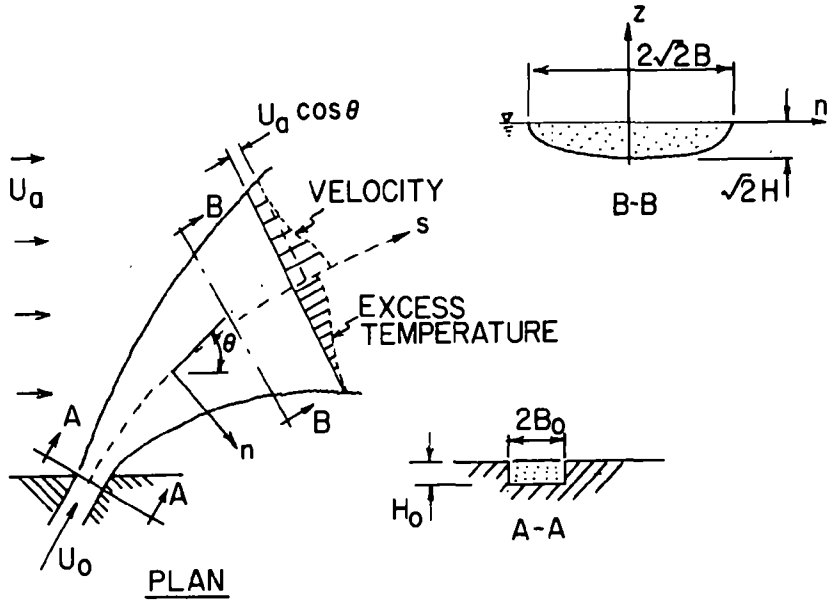


Figure 7 Sketch of typical surface plume - plan and cross-section.

Surface plumes can generally be divided into four regions as shown on the elevation view in Figure 8. Zone I is the zone of flow establishment. Zone II is the zone of fully developed jet type flow with high entrainment and plume growth. Zone III is the zone of nearly constant depth where buoyancy inhibits vertical entrainment, surface heat transfer and interfacial shear play dominant roles. Zone IV is the zone of passive dispersion where ambient turbulence and surface heat transfer are dominant. In two-dimensional theory, an internal hydraulic jump may exist between regions II and III. There is some question, however, whether an internal hydraulic jump will exist in actual three-dimensional jets where lateral spreading is possible.

The dimensionless parameter that determines the magnitudes of these opposing effects is again the densimetric Froude number, but in this case the characteristic length is usually taken as the depth of the discharge canal, $H_o$.

Heat exchange at the surface does not affect the temperature of surface plumes significantly in Zones I and II due to the dominance of entrainment. As entrainment decreases and the plume surface area increases, surface heat exchange becomes important. This heat exchange is due to both convection and evaporation. Methods for calculating approximate values can be found in references (41, 43).

In the case of discharge in shallow basins the plume may be attached to the bottom, eliminating vertical entrainment all together. In such cases, vertical variations of temperature and velocity are often ignored and two-dimensional models are constructed.

Various mathematical models of heated surface jets are available to predict two- and three-dimensional plume configurations. Comprehensive reviews are presented in references (44) and (45) where many two- and three-

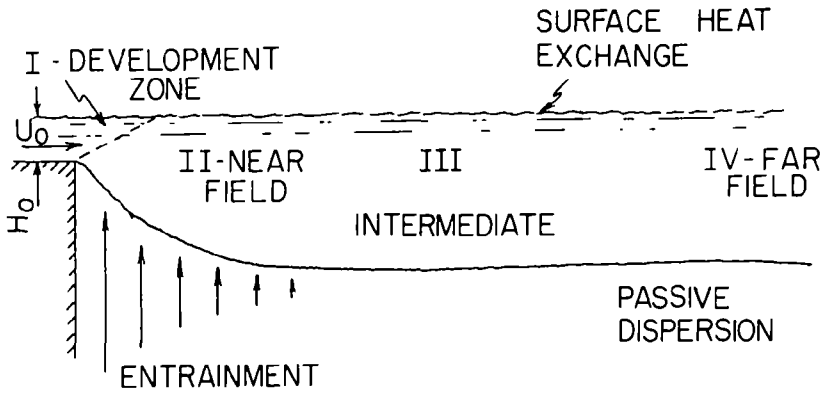


Figure 8. Characteristic zones in surface discharge

dimensional models are classified and evaluated in detail. These models vary from analytical solutions to the diffusion equation to numerical and integral evaluations of the full governing equations in three dimensions. In addition, there are phenomenological or semi-empirical models derived from the correlation of large quantities of data.

Typical two-dimensional models are those of Hoopes, et al. (46), Carter (47), Motz and Benedict (48), Wada (49), Edinger and Polk (50), Csanady (51), and Sundaram, et al. (52). Among the three-dimensional models are those of Stolzenbach and Harleman (53), Stefan, et al.(54), Edinger and Polk (50), Prych (56), Shirazi and Davis (57), and Odgaard (58). The most notable phenomenological models are those of Pritchard (59), (60). In addition, there are several numerical finite difference models discussed in the next section.

The three-dimensional models are of main interest here because they provide the most information and because two-dimensional models can be usually derived from them. The governing equations (1)-(4) and usual simplifications apply to surface discharges as well as submerged discharges when appropriate surface boundary conditions are specified. The horizontal momentum equations are usually separated into an s-direction equation and a lateral buoyant spreading equation. Vertical momentum in surface plumes is usually ignored. The buoyant spreading assumptions employed have been key factors in determining the accuracy of model predictions. The Stolzenbach-Harleman model is probably the most sophisticated integral model with a good treatment of the development zone. Lateral buoyant spreading is a function of the temperature gradient in that direction. It predicts the near field with zero or low cross currents fairly well, but runs into computational difficulties at higher cross currents and over predicts plume widths in the intermediate and far fields. As a result, this model has not been used extensively.

The Prych model is simpler and only includes an approximate analysis of the development zone based on an assumed development length, but it runs without difficulty for most cases, including cross currents. The integral form of the governing equations used by Prych can be expressed as,

Conservation of Mass:

$$\frac{d}{ds}\int U_r dA = \frac{dQ}{ds} = E \tag{16}$$

Conservation of Energy:

$$\frac{d}{ds}\int U_r T_r dA = -2\int_0^{\sqrt{2}B} KT_r(n, o, s)dn \tag{17}$$

Conservation of Momentum in X and Y directions:

$$\frac{d}{ds}\int U_r^2 dA\cos\theta = Sf_x + F_D\sin\theta + U_a\frac{dQ}{ds} - \frac{dP}{ds}\cos\theta \tag{18}$$

$$\frac{d}{ds}\int U_r^2 dA\sin\theta = Sf_y - F_D\cos\theta - \frac{dP}{ds}\sin\theta \tag{19}$$

where P is the integrated hydrostatic pressure force due to density differences within the plume and ambient, $F_D$ is a drag force normal to the plume, $Sf_x$ and $Sf_y$ are interfacial shear forces in the X and Y directions. The coordinate system used is shown on Figure 7. The velocity and temperature profiles used were expressed as,

$$T_r = \Delta T_c \exp(-n^2/B^2) \cdot \exp(-Z^2/H^2) \tag{20}$$

$$U_r = \Delta U_c \exp(-n^2/B^2) \cdot \exp(-Z^2/H^2) + U_a \cos\theta \tag{21}$$

where B and H are the characteristic half width and depth of the plume respectively.

For closure, expressions for the entrainment and lateral spreading rates, dB/ds are needed. Prych determines entrainment from Morton-type entrainment functions for each horizontal and vertical layer within the plume. Vertical entrainment is modified to account for local buoyancy effects. In addition, he adds ambient turbulent entrainment using vertical and horizontal eddy diffusion coefficients.

The lateral spreading, dB/dS, is determined by considering non-buoyant spreading and adding to that, spreading due to buoyancy. The non-buoyant spreading is determined by considering vertical and horizontal entrainment and momentum in the absence of buoyancy effects. To account for buoyant spreading, Prych used a buoyant spreading velocity equal to that caused by a density wave of an immiscible film spreading over water. The resulting buoyant spreading rate was expressed as,

$$\left(\frac{dB}{ds}\right)_b = [2(F_L^2 - 1)]^{-1/2} \tag{22}$$

where $F_L$ is a local Froude number given by

$$F_L^2 = \frac{Q^2}{\pi^{3/2}\, g'\Delta T\, H^3 B^2} \tag{23}$$

With the assumed profiles and selected model coefficients, equations (16)(19) and (22) were evaluated with a fourth order Rung-Kutta integration in the S direction to yield plume trajectory, centerline temperatures, width and depth and surface isotherms. Unfortunately the solution has a singularity at a local Froude number, $F_L$, equal to 1.0 and the buoyant spreading assumptions cause over prediction of plume width.

The Odgaard model is a modified version of the Prych model with provisions for bottom attachment. This is done by limiting the vertical entrainment and modifying the plume cross-sectional shape when attached.

The Shirazi-Davis model is also based on Prych's, however, several modifications were made to improve it. The development zone calculations were modified by introducing an empirically determined development length which was a function of the discharge aspect ratio and Froude number. Time of travel calculations were introduced. The biggest modification, however, was in the buoyant spreading assumptions where interfacial shear and a non-abrupt density front were accounted for. The expression for buoyant spreading developed was,

$$\left(\frac{dB}{ds}\right)_b = 1.4\left(\frac{B}{H} F_L^2 - 1\right)^{-1/2} \tag{24}$$

Although this expression is quite similar to the one used by Prych, the modifications were sufficient to cause a much better prediction of plume growth. The coefficients within the Shirazi-Davis model were systematically tuned using the correlations obtained by Shirazi (61) from a variety of surface plume data. Like Prych's model, the Shirazi-Davis also has computational singularities. These were avoided in reference (62) by using an extrapolation routine to yield usable data in special cases where the singularities were encountered.

Pritchard's integral/phenomenological model (60), is basically a non-buoyant jet analysis with tophat profiles and special interpretations to account for plume spreading and energy loss. The plume depth is assumed constant except for a linearly varying region close to the outfall. Ambient current is superimposed on the no-current solution to obtain trajectory, thus limiting it to low ambient velocities. Centerline temperatures are determined from entrainment assumptions and are corrected to account for environmental conditions. Once the distance to a particular isotherm is determined, the surface area within the full isotherm is determined by assuming "bullet"

shaped areas after an initial spreading region as shown on Figure 9. The width of the "bullet" is made a function of the centerline distance to the isotherm using field observations as a guide. This model relies heavily on the engineering judgment of the user and can give very good or very bad answers depending on the user.

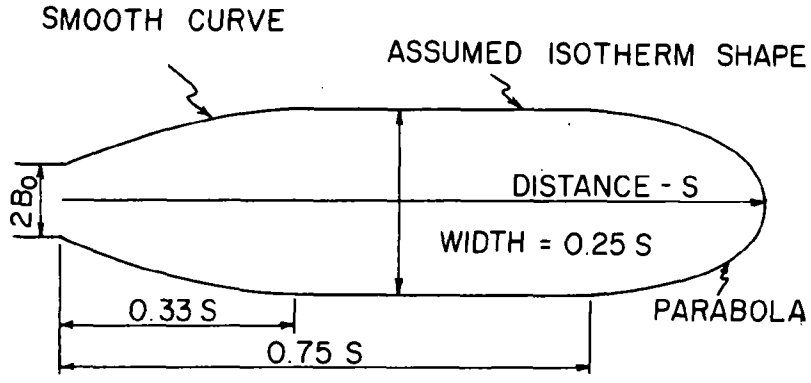


Figure 9. "Bullet" shaped surface isotherm area used by Pritchard.

In the detailed comparison of surface plume models to field data by Dunn, et al. (45), it was concluded that the Shirazi-Davis integral model and the Pritchard integral/phenomenological model (60) were superior in simulating surface plume properties than the other models considered. None of the models, however, were able to accurately predict all the cases considered all the time. Bottom and shoreline encounter cannot be handled in general integral and empirical models. In addition, wind shear and current distortion of plume profiles are not handled properly in existing models. For a discussion on these subjects refer to (63) and (64).

Numerical Models

In the past few years there has been considerable interest in the development of advanced numerical models capable of predicting thermal plume properties including surface, bottom, and shoreline restrictions, wind effects and transient environmental conditions which cannot be handled with integral or phenomenological models. Although numerical methods are capable of greater generality, they are considerably more costly to run and in most cases require very large computers. As a result, they are usually used for specific applications rather than parametric studies.

The complete equations (1)-(4) are often used in numerical modeling. They are expressed in finite difference form and applied to a two- or three-

dimensional grid covering the region of interest. The equations are solved by one of a number of numerical schemes with appropriate initial and/or boundary conditions. Some use implicit methods while others use explicit. Some use the full parabolic equations while others use elliptic expressions. Various assumptions are made to reduce computation time and make a solution tractable. These include variations of transient or steady state solutions, completely free surface or the rigid lid approximation, and often that pressures are hydrostatic only. In addition, most models employ the Boussinesq approximation and assume turbulent flow ignoring molecular diffusion. One of the more difficult problems in numerical modeling is the simulation of turbulence and the resulting eddy diffusion coefficients.

The rigid lid approximation assumes no vertical motion at the free surface. It greatly reduces run time since small time steps are required for stability in handling free surface gravity waves. A surface pressure variation, however, must be calculated to account for surface elevations in the plume due to buoyance. This pressure variation must be calculated accurately since the slope of the surface is directly related to dispersion rates.

The hydrostatic approximation removes vertical advection and diffusion terms from the governing equations. This makes pressure a function of gravity only and greatly simplifies calculations. This is a reasonable assumption for surface discharges at low Froude numbers but it is usually not used in models capable of simulating submerged discharges.

Eddy diffusion models for mass and heat vary considerably. Excellent discussions of the various types can be found in (45), and (65). The most common expressions used in thermal plume modeling are based on Prandtl's mixing length theory where the apparent eddy diffusivities are given by

$$\nu = \ell^2 \left| \frac{\partial u}{\partial y} \right| \tag{25}$$

where $\ell$ is the mixing length. The expressions used to determine the mixing length are as numerous as expressions for entrainment. A second type of expression uses the turbulent kinetic energy along with the mixing length or energy dissipation function. These are calculated following the suggestions of Kolmogorov (66) and Prandtl (67) from one or more independent differential equations.

Typical numerical models can be found in references (68-87). Since the authors have not had firsthand experience with any of these models, they hesitate to pass judgment. Excellent reviews of these and other models can be found in (45), and (88). The authors of these reviews conclude that integral and phenomenological models are developed about as far as possible and that numerical models, although having greater potential for development, are disappointing in their present predictive capabilities.

## ATMOSPHERIC DISCHARGES

Power plant discharges into the atmosphere resulting in thermal plumes fall into two main areas: moist plumes from wet cooling towers and dry plumes from stacks. Since dry cooling tower plumes are just a special case of wet plumes, it is felt that they can be easily handled using appropriate wet plume models and are therefore not considered in this paper.

### Stack Plumes

The prediction of the rise and dispersion of stack plumes has been the subject of study for decades (89-92) and many papers have been written on the subject (93). The concern is not only for the particulate matter discharged from these stacks but also for the products of combustion (primarily $SO_2$) that might form acid mist or acid rain causing damage to vegetation and property. Many models have been proposed to predict plume rise from stacks but probably the most widely used are Gaussian plume models or simple plume rise equations developed from basic conservation equations.

Gaussian Plume Models: Gaussian plume models are probably the oldest but least accurate method of predicting plume properties. This method is essentially empirical in that experimentally determined values are used to determine the standard deviations of Gaussian-shaped plume property profiles super-imposed on a separately calculated plume height. For example, the expression for concentration is given by:

$$C_i = \frac{Q_i}{2\pi\sigma_y\sigma_z U_a} \{1 + \exp[-\frac{1}{2}(\frac{2Z}{\sigma_z})^2]\} \qquad (26)$$

where $C_i$ is the concentration of the variable of concern, Z is the plume height, $Q_i$ is the variable source strength at discharge, $U_a$ is the mean wind speed, and $\sigma_z$, $\sigma_y$ are the vertical and horizontal cross-wind standard deviations of the Gaussian profiles. These standard deviations are usually determined from empirical expressions as functions of downwind distance and atmospheric stability or from curves as found in Pasquill (94) or Gifford (95). Since plume rise must be calculated, this method is usually used in conjunction with plume rise models or where changes in plume height are not important such as after reaching maximum height of rise. Probably the widest application of this method can be found in Turner (96).

Plume Rise Formulas: Briggs (93) presents a critical review of existing empirical and theoretical models and compares them to one of his own derived from the conservation of mass, buoyancy, and momentum. The simplified formulas developed from these equations have achieved wide acceptance in predicting plume rise of vertical and bent-over plumes. In the development of these formulas, Briggs assumes: 1) a virtual source, 2) negligible wind shear and plume curvature, 3) horizontal velocities equal to the wind speed (bent-over assumption), 4) tophat profiles, 5) a homogeneous atmosphere, and 6) a Taylor-type entrainment model (42) with one coefficient based on a rising thermal. He considers two types of discharge, one with buoyancy and no initial momentum and the other with initial momentum and no buoyancy. The resulting equations are:

For maximum height of rise into a stable atmosphere:

Buoyant bent-over plume with wind,

$$Z_{max} = 2.4\ [F/(U_a S)] \tag{27}$$

Buoyant vertical plume without wind

$$Z_{max} = 5.0\ F^{1/4} S^{-3/8} \tag{28}$$

Nonbuoyant bent-over jets with wind,

$$Z_{max} = 1.5\ (F_m/U_a)^{1/3} S^{-1/6} \tag{29}$$

Nonbuoyant vertical jets without wind,

$$Z_{max} = 4(F_m/S)^{1/4} \tag{30}$$

For plume rise as a function of distance under windy conditions, the Briggs bent-over model gives,

Buoyant plume:

$$z = 1.8F^{1/3} U_a^{-1} x^{2/3} \tag{31}$$

Nonbuoyant jet:

$$z = 2.3\ F_m^{1/3} U_a^{-2/3} x^{1/3} \tag{32}$$

where F is a buoyancy flux parameter, $F_m$ is the momentum flux parameter, s is the stability or stratification parameter, and $U_a$ is the average wind speed at stack level and x is the distance downwind from the stack. Briggs suggests that equation (31) is good for either stable or neutral conditions up to maximum height of rise or to the point where atmospheric turbulence begins to dominate entrainment.

For stack discharge with both buoyancy and momentum Briggs suggests the following approximate equation for distances not too far from the stack,

$$z = 2.3F_m^{1/3} U_a^{-2/3} x^{1/3} \left(1 + \frac{Fx}{2F_m U_a}\right)^{1/3} \tag{33}$$

Although the 2/3 power law given in equation (31) for windy conditions is from a simplified analysis, it has been shown to predict plume rise in most of the cases to within about 20% (93). If greater accuracy is desired, especially near the stack where plume bending exists, under low wind conditions, it is suggested that one of the more refined integral plume models such as Hirst (21) or Schatzmann (30) that accounts for bending, wind shear, and variable atmospheric conditions be used.

Wet Cooling Tower Plumes

The main environmental concerns of cooling tower plumes are those of fogging, icing and drift. Since the discharge from wet cooling towers is near saturation, a large visible plume is created under many environmental conditions.

This is best shown by considering the thermo-dynamics of air-water vapor mixtures. Figure 10 is a psychrometric chart for moist air showing the saturation curve of absolute humidity versus temperature. Point A is typical of a wet cooling tower discharge at a saturated state. Points B, C, and D represent different atmospheric conditions. The lines connecting point A with points B, C, and D are approximate mixing lines. The resulting mixture of tower effluent with ambient air will have states along the mixing line, starting at A and moving along the line as dilution increases. If the mixed state falls to the left of the saturation curve, supersaturation exists where condensation occurs and small liquid droplets are formed causing a visible cloud. States to the right of the saturation curve are unsaturated and the plume is invisible. Thus, if the effluent is mixed with air of state B, the plume would initially be visible and would remain so until state E is reached at which point the plume would disappear. For atmospheric conditions at point C the plume would be very long and could possibly merge with existing clouds. For State D, the plume would be very short if visible at all.

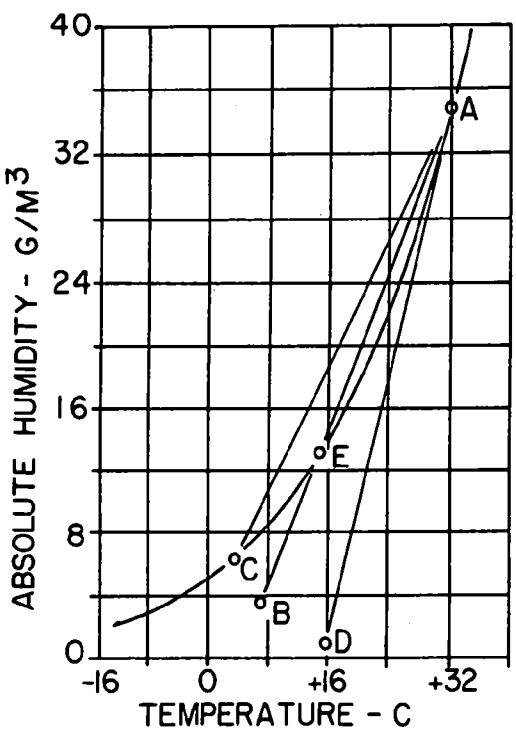


Figure 10 Psychrometric chart for air-water vapor mixutre with possible mixing lines of cooling tower plume with ambient air.

In addition to being of concern to air traffic, this visible plume may under downwash conditions cause fog and, in some cases, ice. Also, the water spray drops carried away from the tower in the form of drift are of particular concern since they carry with them the dissolved solids, chemicals, and sometimes bacteria and virus from the recirculating cooling water.

As a result of these concerns, extensive work has been done in developing models of varying complexity to predict the characteristics of cooling tower plumes. Models interested in the deposition of cooling tower drift usually have a drift model superimposed on a plume model. Since this paper is interested mainly in thermal plumes, these drift models will not be considered. Persons interested in drift deposition should consult references (97-101).

Several good survey reports have been published on cooling tower plumes. The most notable are references (102) and (103). The first is a compilation of the proceedings of a symposium held at the University of Maryland and includes several very good papers. The second is a (1975) state-of-the-art review prepared for the ASME Research Committee on Atmospheric Emissions and Plume Behavior from Cooling Towers.

There is such a variety of plume models in the literature that only a few of the typical ones can be considered in this paper. In general, cooling tower plume models can be classified as a) Gaussian, b) closed form bent-over plume models, c) integral models, and d) numerical models.

Gaussian and Bent-Over Cooling Tower Plume Models: Gaussian and bentover models applied to cooling tower plumes are essentially the same as for stack plumes except that the concentration of water content is also considered. From the water content and thermodynamic relations, the existence of a visible plume is determined. Examples of Gaussian models used for cooling towers can be found in (104, 105, 106).

The models of Hanna (107), Wigley and Slawson (108), and Csanady (109) are typical of bent-over cooling tower plume models. Since entrainment is assumed to be constant, the plume radius and dilution can be expressed as (103),

$$R/R_o = (U_o/U_a)^{1/2} + \alpha z \tag{34}$$

$$Q/Q_o = [1 + \alpha\ (U_a/U_o)^{1/2} Z/R_o]^2 \tag{35}$$

where $\alpha$ is the entrainment coefficient, $R_o$ is the initial radius, and $Q_o$ is the initial volume flux. The end of the visible plume is taken when the relative humidity falls below 100%. The entrainment coefficient is subject to interpretation and could best be classified as an empirical constant which has different values depending on local effects. Hanna (110) suggests a value of $\alpha$ = 0.5 while others (103), (111) suggest a value of 0.3.

These bent-over plume models have the advantage of being simple and are a considerable improvement over Gaussian plume models. They have been found to yield satisfactory results for many conditions in the intermediate region of the plume, especially for natural draft towers that have little vertical momentum at discharge. They should obviously not be used near the tower where initial momentum affects dilution and trajectory, or far away from the tower where ambient turbulence dominates, or for non-homogeneous atmospheres. Accuracy is improved by numerically integrating the equations with variable boundary conditions and selecting coefficients suitable for these conditions. Hanna (107) uses a successive approximation method to partially account for latent heat effects on plume rise. Meyer et al. (113) patch a Gaussian plume model to a bent-over plume model after it has reached its maximum height of rise under stable conditions.

Integral Models: Integral models have the advantage of satisfying the governing conservation equations as well as including many of the effects ignored in the simplified bent-over plume models such as plume bending, wind shear, drag, finite discharge radius, plume cross-sectional profiles, plume merging from multiple sources, and varying atmospheric conditions. Typical of these are the models of Wigley and Slawson (114), Slawson, et al. (111), Hanna (115), Meyer, et al. (113), Weil (116), Tsai and Huang (117), Winiarski and Frick (118), Lee (119), Wu and Koh (120), Davis (38), and Macduff and Davis (121). These vary in complexity from the step-by-step integration of simple bent-over plume models to complete models that include all of the above effects.

The integral form of the conservation of mass and momentum are given by equations (5) and (7). A drag term is sometimes added to the momentum equation. The conservation of energy and total moisture can be written in the following form (116), (120), (121) assuming that condensed water droplets travel with the plume:

The conservation of energy:

$$\frac{d}{ds} \int \bar{U}(\bar{T} - Ta)dA = [\ \frac{dT_a}{ds} + \Gamma \sin\theta] \int \bar{U}dA + \int \frac{h_{fg}R_c}{\rho C_p}\ dA \qquad (36)$$

The conservation of moisture (liquid and vapor):

$$\frac{d}{ds} \int \bar{U}(q - q_a + \sigma)dA = -\ \frac{dq_a}{ds} \int \bar{U}dA \qquad (37)$$

In the above q is the vapor phase specific humidity, $\sigma$ is the liquid phase moisture content, $R_c$ is the condensation (evaporation) rate, $\Gamma$ is the adiabatic lapse rate, and $h_{fg}$ is the latent heat of vaporization (condensation). If thermodynamic equilibrium is assumed, the saturated specific humidity can be determined as a function of temperature from the Clausius-Clapeyron equation for tabulated values.

These equations can be integrated once appropriate profiles for U, T, q, and $\sigma$ are assumed. The actual shape of the assumed profiles is not important if similarity is assumed throughout the length of the plume, including the zone of flow establishment, since the integrated values would differ only by a constant. If the change in profiles through the zone of flow establishment and merging zones between plumes is to be accounted for and if the distribution of properties across the plume is desired, the assumed profiles become important. Most models use "top hat" profiles with Davis (38) and Macduff and Davis (121) being the exception where polynomial profile was used to facilitate smooth merging of multiple plumes. The entrainment function, E, is an important part of the integral plume analysis since it determines the rate of dilution bending and plume growth. Most are based on the Morton entrainment assumption with variations to account for wind impingement, buoyancy, velocity deficit, and plume merging. When combinations of these various effects are considered, additional empirical entrainment coefficients must be included within the function. Thus the more complicated versions have as many as five empirical coefficients.

Meyer et al. (113) present two different models. One is a simple bent-over plume following the lines of Briggs (93), Hanna (76), Wigley and Slawsen (114) and the other more complete model that includes plume bending similar to the models of Weil (116), Wu and Koh (120) and Winiarski and Frick (118). These later models do not make the bent-over plume assumption but rather calculate the plume trajectory from both the vertical and horizontal momentum equations step-by-step as integration proceeds. Meyer uses a simple entrainment function that includes coefficients for wind sheer only. They handle the merging of multiple plumes by considering three regions: one when the plumes are separate; the second when plumes are merging and the circumference of the plumes used in the entrainment function is a function of the degree of merging: and third when the plumes are completely merged where a rectangular shaped cross-section is assumed.

Winiarski and Frick divide entrainment into two components, one due to the direct impingement of wind which is strictly a function of geometry and thus requires no coefficient and a second that is due to velocity differences between the plume and ambient with the usual coefficient. Drag is also handled in this model in a fundamental way by considering the entrained fluid and the difference between the ambient and plume horizontal velocities. They also include a virtual mass in their vertical momentum claiming that in order for the plume to rise due to buoyancy, it must move an equal amount of mass of ambient air above it.

The model of Wu and Koh was developed to handle the merging of multiple moist plumes having an arbitrary source configuration. It is therefore not restricted to linear multi-port discharges. They use the full governing equations (5, 7, 36, 37) including drag and propose an entrainment model which includes the effects of shear, buoyancy and ambient turbulence. Their entrainment function is:

$$E = \bar{P}\ \{a_1\ U\ + a_2 U_a\ \sin\theta\ \cos\theta + a_3 U_a'\} \tag{38}$$

where $\bar{P}$ is the plume perimeter as determined by plume geometry described below, $U$ is the net velocity in the plume relative to the ambient velocity, $U_a$ and $U_a'$ is a turbulent intensity function. The constants $a_1$, $a_2$, and $a_3$ are entrainment coefficients. The first accounts for asperation type entrainment, the second for buoyant thermal type entrainment, and the third is for ambient turbulence.

The value of $a_1$ is suggested to be 0.1116 for the round portion of plume from tower discharges with low discharge Froude numbers and 0.198 for the slot portion of the plume. The values of $a_3$ and $a_4$ were taken as 0.3536 and 1.0 respectively. The merging of two round plumes of different size is accomplished by forming two half round plumes connected by a slot section as shown on Figure 11. The plumes are merged when the area of the trapezoid between the straight sections equals the sum of the areas of the two half circles thus conserving flow area. The perimeter used in the entrainment function is that formed by this modified cross-section. The merging of two modified shapes is accomplished in a similar manner as shown in Figure 12 with the new plume again having two half round ends of radius B1 and B2 connected by a slot section of length A inclined at an angle Ø. Various combinations of merging are considered in the model. This model has not been compared to data so its accuracy is not known at present.

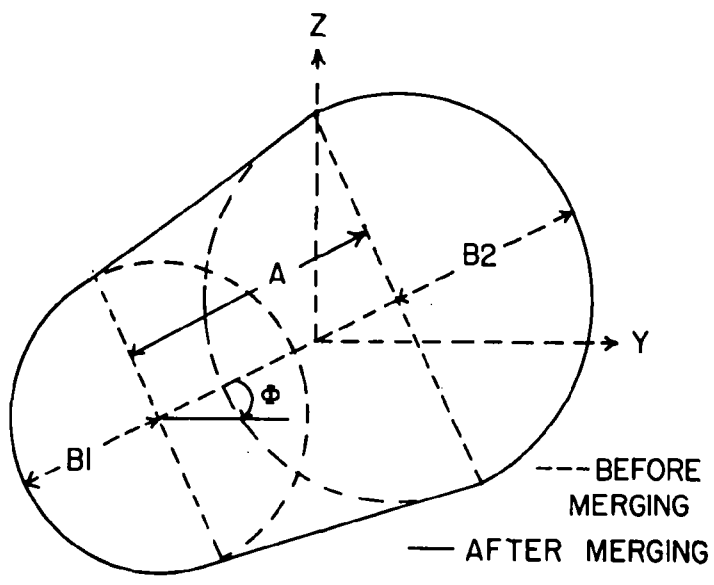


Figure 11 Cross-section of round plumes before and after merging as used in the Wu-Koh model (120)

The cooling tower plume model developed by Davis (38) is a version of the gradual merging multiple plume model (23) discussed in the submerged water plume section that contains moisture effects. In Macduff and Davis

(121) the model is extended to include the possibility of merging within the zone of flow establishment. Total moisture (liquid and vapor) is assumed to have the same 3/2 power profiles as temperature. The Clausius - Clapeyron relation is used to calculate vapor content in the saturated portion of the plume. The difference between total moisture and vapor content yields the liquid moisture content as shown on Figure 13.

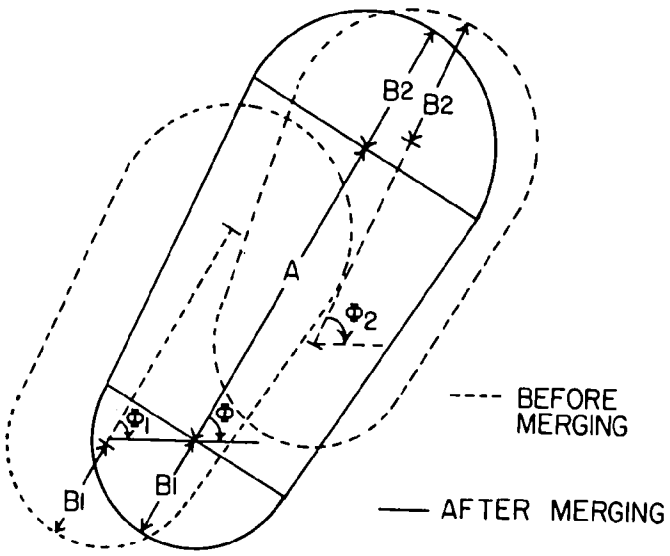


Figure 12 Cross-section of two modified plumes before and after merging as used in the Wu-Koh model (120).

When liquid phase is present, the plume is assumed to be visible. Since the edge of the plume always approaches the ambient unsaturated vapor content, the portion of the plume cross-section that is visible varies depending on the degree of mixing, ambient conditions, etc. It is possible then to have average plume properties, as predicted by top-hat profiles, that are unsaturated and thus invisible while in actuality there is still a portion of the plume that is visible. The Macduff-Davis model will properly handle this problem, but it is a complicated model, especially when the plumes are merging in the zone of flow establishment. Although the merging process proposed in this model has been shown to work well with submerged diffusers (23), it has not been compared to sufficient cooling tower data to know if it improves prediction over simplier models.

Briggs (122) handles multiple cooling tower plumes and the effects of merging by simply adjusting the plume rise of a single plume using an "enhancement coefficient" given by,

$$Z_m = Z_s\left(\frac{N + S}{1 + S}\right)^{1/3} \qquad (39)$$

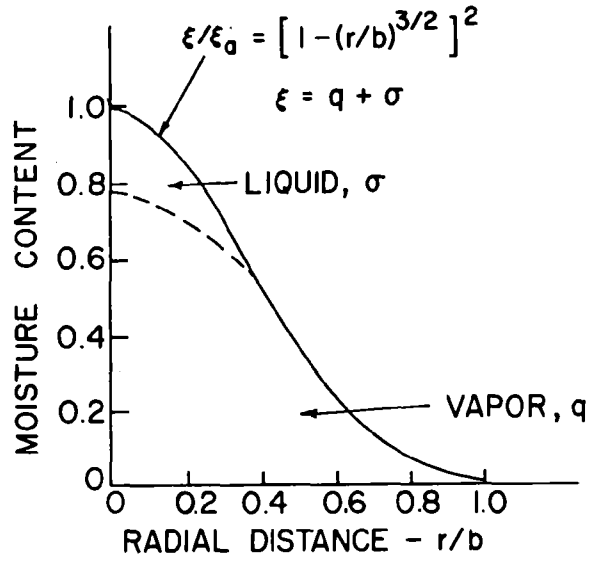


Figure 13 Moisture profiles (total and vapor) in cooling tower plume as calculated in the Macduff-Davis model (121).

where $Z_m$ is the multiple plume rise, $Z_s$ is the single plume rise from equation (31) N is the number of sources. The value of S is calculated from

$$S = 6[(N - 1)L/(N^{1/3}Z_s)]^{3/2} \tag{40}$$

where L is the source spacing. Policastro, et al. (123), as part of an on-going study to validate cooling tower plume rise and drift deposition models report, on the comparison of eight plume models (114-117, 124-126) to existing natural draft cooling tower data. Both trajectory and visible plume length were compared. They concluded that for single-tower plumes, the Winiarski-Frick (118) model had the best overall record in predicting visible plume length, usually within a factor of 2.0, but it tended to under-predict plume rise. The Wigley-Slawson (114) model performed best in plume rise predictions. In a more recent version of the Winiarski-Frick model (127) the prediction of trajectory was improved by removing the virtual mass from the momentum equation. For multiple plumes the Hanna model (115) that accounted for merging by simply changing from individual small plumes to one large plume abruptly at merging, generally predicted plume rise best. However, predictions were still from 0.55-3.7 of the actual plume rise. The Policastro et al., report concludes that, of the eight models tested, none were able to adequately predict visible plume length for multiple plumes and that merging was greatly over-simplified in each of the models considered.

Laboratory and field collected data on cooling tower plume characteristics are considerably more scarce than plume models. Data that exist includes a) laboratory studies of dry plumes (128, 129, 130, 24,32) using both water and air as working fluids, b) field measurements using photographic and aircraft flythrough measurements (111, 113, 131), and c) radiosonde measure-

ments of plume characteristics in the field using tethered balloons (118) (132). Laboratory studies are valuable in studying individual variables under controlled conditions as well as structural and local terrain effects. Many of the empirical constants used in plume modeling are best determined using laboratory experiments. It is difficult, however, to simulate actual atmospheric stability conditions in the laboratory and care must be taken to insure that correct scaling laws are followed. Good discussions of scale effects in cooling tower model studies are found in references (133) and (134).

Field measurements are difficult to obtain. However, photographic studies of visible plume length have been quite satisfactory. Aircraft flythrough measurements of dilution are difficult to evaluate due to instrument lag and the effects of large scale ambient turbulence on plume motion. Tethered balloon techniques using suspended instrument packages seem to work well in giving time average values, however, the data collected by this method to date is minimal. This method has the advantage of being able to measure the properties in the invisible portion of the plume but positioning the instrument package in the plume is sometimes limited by local terrain, power lines, buildings, etc. In addition, the correlation between different traverses of the instrument package through the plume only have meaning if the wind is holding fairly constant.

The collection of field data should be continued for a wide variety of ambient and discharge conditions so that plume models can be evaluated from a firm data base.

Numerical Cooling Tower Plume Models: Numerical cooling tower plume models have the same advantages and suffer from the same disadvantages as numerical water plume models. There are several in the literature but due to the proprietary nature of most, only a few give details of the models. The EG&G model developed by Weinstein and Davis (135) is probably the best documented, having been developed under an EPA contract. It has a fairly good treatment of plume thermodynamics and cloud physics but the entrainment assumptions are questionable and only calm atmospheric conditions are modeled. As a result, this model has mainly been used as a stepping stone to better models. These include the models of Stephen and Moroz (136), the Swiss-developed SAUNA and KUMULUS (137, 138) models, and the Systems Science and Software model (139). These later models are more sophisticated and from what can be found in the literature, they appear to consider nearly all the factors influencing plume characteristics including droplet formation and plume vorticity. An independent evaluation of them, however, has not been conducted to the authors knowledge.

## ACKNOWLEDGEMENT

The authors wish to acknowledge the information personally provided them by various researchers. They especially express their appreciation to Mr. Maurice Ades, Department of Nuclear Engineering, Oregon State University, whose many hours of unselfish assistance made this paper possible.

## REFERENCES


1. Gambs, G. C., The Energy Crisis in the United States, Proceedings of the 1972 ASME Winter annual Meeting Symposium on the Energy Crisis.

2. Reichardt, H., ZAMM, Vol. 24, Num. 5, p. 268-272, 1944.

3. Koh, R. C., and Fan, L. N., Mathematical Models for the Prediction of Temperature Distribution Resulting from the Discharge of Heated Water in Large Bodies of Water, USEPA Water Pollution Control Research Series Report, 16130DWO/70, October 1970.

4. Jain, S. C., Sayre, W. W., Akyeampong, Y. A., McDougall, D., and Kennedy, J. F., Model Studies and Design of Thermal Outfall Structures Quad-Cities Nuclear Plant, University of Iowa Institute of Hydraulic Research, IIHR-135, September 1971.

5. Harleman, D.R.F., Adams, E.E., and Koester, G., Experimental and Analytical Studies of Condenser Water Discharge for the Atlantic Generating Station, Massachusetts Institute of Technology, R. M. Parsons Lab., Report 173, 1973.

6. Isaacson, M.S., Koh, R.C.Y., and List, E.J., Hydraulic Investigations of Thermal Diffusion During Heat Treatment Cycles, San Onofre Nuclear Generating Station Units 2 and 3, California Institute of Technology, W. M. Keck Lab., Report 76-2, Dec. 1976.

7. Koh, R.D.Y., Hydraulic Modeling of Thermal Outfall Diffusers for the San Onofre Nuclear Power Plant, California Institute of Technology, W. M. Keck Lab., Report KH-R-30, 1974.

8. Pryputniewicz, R.J., and Bowley, W.W., Transactions ASME Journal of Heat Transfer, Vol. 97, p. 274-281, 1975.

9. Jirka, G., and Harleman, D.R.F., The Mechanics of Submerged Multiport Diffusers for Buoyant Discharges in Shallow Water, Massachusetts Institute of Technology, R.M. Parsons Lab., Report 169, March 1973.

10. Argue, J., The Mixing Characteristics of Submerged Multiple Port Diffusers for Heated Effluents in Open Channel Flow, University of Iowa, Masters Thesis, May 1973.

11. Fan, L. H., Turbulent Buoyant Jets into Stratified and Flowing Ambient Fluids, California Institute of Technology, W.M. Keck Lab., Report KH-R-15, 1967.

12. Schmidt, F.H., Tellus, 9, p. 378-383, 1957.

13. Albertson, M.L., Dai, Y.B., Jensen, R.A., and Rouse, H., Transactions ASCE, Vol. 115, p. 639-697, 1950.

14. Rouse, H., Yih, C.S., and Humphreys, H.W., Tellus, Vol. 4, p. 201-210, 1952.

15. Brooks, N.H., Diffusion of Sewage Effluent in an Ocean Current, Proceedings of the First Conference on Water Disposal in the Marine Environment, Pergamon Press, Inc., N.Y., 1959.

16. Morton, B.R., Taylor, A.G., and Turner, J.S., J. Royal Soc. of London, Vol. A234, p. 2-23, 1956.

17. Priestley, C.H.B., and Ball, F.K., Quarterly Journal of the Royal Meteorological Society, Vol. 81, p. 144-157, 1955.

18. Abraham, G., Transactions ASCE J. Hydraulics Div. Vol. 86, HY6, p. 1-13, 1960.

19. Hoult, F.A., Fay, J.A., and Forney, C.J., J. of Air Pollution Control Assoc., Vol. 19, p. 585-590, 1969.

20. Fox, D.G., J. Geophys. Res., Vol. 75(33), p. 6818-6835, 1970.

21. Hirst, E.A., Analysis of Round, Turbulent, Buoyant Jets Discharged to Flowing Stratified Ambients, Oak Ridge National Laboratory, Report ORNL 4685, June 1971.

22. Hirst, E.A., Analysis of Buoyant Jets within the Zone of Flow Establishment, Oak Ridge National Laboratory, Report ORNL-TM-3470, August 1971.

23. Kannberg, L.D., and Davis, L.R., An Experimental/Analytical Investigation of Deep Submerged Multiple Buoyant Jets, USEPA, Corvallis Environmental Research Lab., EPA-600/3-76-101, September 1976.

24. Kannberg, L.D., and Davis, L.R., Transactions of ASME J. of Heat Transfer, Vol. 99, p. 648-655, November 1977.

25. Chen, J.C., and Rodi, W., A Review of Experimental Data of Vertical Turbulent Buoyant Jets, University of Iowa Institute of Hydraulic Research Report IIHM 193, October 1976.

26. Chen, J.C., and Rodi, W., On Decay of Vertical Buoyant Jets in Uniform Environment, Sixth International Heat Transfer Conference, Toronto, Canada, Contributed Paper 258, August, 1978.

27. Madni, I.D., and Pletcher, R.H., Transactions of ASME, J. of Heat Transfer, Vol. 99, p. 99-104 and 641-647, 1977, see also J. of Fluids Engineering, Vol. 97, p. 558-567, 1975.

28. Oosthuizen, P.H., Profile Measurements in Vertical Axisymmetric Buoyant Air Jets, Sixth International Heat Transfer Conference, Toronto, Canada, Contributed Paper 185, August 1978.

29. Huang, S.S., and Pletcher, R.H., Prediction of Buoyant Turbulent Jets and Plumes in a Cross Flow, Sixth International Heat Transfer Conference, Toronto, Canada, Contributed Paper 289, Aug. 1978.

30. Schatzman, M., A Mathematical Model for the Prediction of Plume Rise in Stratified Flows, Proceedings of the Penn State Symposium on Turbulent Shear Flows, April 1977. See also, Auftriebsstrahlen in Natuerlichen Stroemungen Entwicklung eines Mathematischen Modells, Dissertation, Universitaet Karlsruhe, 1976.

31. Kotsovinos, N.E., A Study of the Entrainment and Turbulence in a Plane Buoyant Jet, California Institute of Technology, W.M. Keck Lab. Report KH-R-32, August 1975.

32. Davis, L.R., Shirazi, M.A., and Slegel, D.L., Measurement of Buoyant Jet Entrainment from Single and Multiple Sources, Heat Transfer Division of ASME Paper 77-HT-43, Aug., 1977, Accepted for J. of Heat Transfer.

33. Baumgartner, D.J., and Trent, D.S., Ocean Outfall Design Part K: Literature Review and Theoretical Development, U.S. Dept. of Int., Federal Water Quality Adm., 1970.

34. Shirazi, M.A., and Davis, L.R., Workbook of Thermal Plume Prediction Vol. I: Submerged Discharge, USEPA, Corvallis Environmental Research Lab., EPA-R2-72-005a, Aug. 1972. (NTIS No. PB228293)

35. Platten, J.L., and Keffer, J.F., Entrainment in Deflected Axisymmetric Jets at Various Angles to the Stream, Univ. of Toronto, Mech. Engr. Report UTPIE-TP-6808, 1968.

36. Shirazi, M.A., Davis, L.R., and Byram, K.V., An Evaluation of Ambient Turbulence Effects on a Buoyant Plume Model, Proceedings of 1973 Summer Computer Simulation Conference, Montreal, P.Q., Canada, July 1973.

37. Ginsberg, T., and Ades, M., Transactions ANS, Vol. 21, p. 87-88, 1975.

38. Davis, L.R., Analysis of Multiple Cell Mechanical Draft Cooling Tower Plumes, USEPA, Corvallis Environmental Research Lab., EPA-660/3-75-039, June 1975.

39. Sfarza, P.M., Steiger, M.H., and Trentacoste, N., AIAA Journal, Vol. 4, p. 800-806, 1966.

40. Cederwall, K., Buoyant Slot Jets into Stagnant or Flowing Environments, California Institute of Technology, W.M. Keck Lab., Report KH-R-25, April 1971.

41. Hogan, W.T., Liepins, A.A., and Reed, R.E., An Engineering-Economic Study of Cooling Pond Performance, USEPA Water Pollution Control Research Series, 16130DFX05/70, May 1970.

42. Taylor, G.I., Dynamics of a Mass of Hot Gas Rising in the Air, USAEC Report MDDC-919 (LADC-276), Los Alamos Scientific Lab., 1945.

43. Thackston, E.L., Effect of Geographical Variation on Performance of Recirculating Cooling Ponds, USEPA Corvallis Environmental Research Lab., Report EPA-660/2-74-085, December 1974.

44. Policastro, A.J., and Tokar, J.V., Heated Effluent Dispersion in Large Lakes: State-of-the-art-Review of Analytical Modeling, Argonne National Lab. Report ANL/ES-11, January 1972.

45. Dunn, W., Policastro, A.J., and Paddock, R.A., Surface Thermal Plumes: Evaluation of Mathematical Models for the Near and Complete Field, Argonne National Lab. Report ANL/WR-75-3 Part 1, May 1975, Part 2, August 1975.

46. Zeller, R. W., Hoopes, J.A., and Rolich, G.A., J. Hydraulics Div. ASCE, HY9, p. 1403-1426, 1971.

47. Carter, H.H., A Preliminary Report on the Characteristics of a Heated Jet Discharged Horizontally into a Transverse Current: Part 1, Constant Depth, John Hopkins University, Chesapeake Bay Institute Report 61, November 1969.

48. Motz, L.H., And Benedict, B.A., Heated Surface Jet Discharged into a Flowing Ambient Stream, Vanderbilt University Dept. Environmental and Water Resources Engr., Report 4, August 1970.

49. Wada, A., Coastal Engineering in Japan, Vol. 10, 1966 and 1967.

50. Edinger, J.E., and Polk, E.M. Jr., Initial Mixing of Thermal Discharges into Uniform Current, Vanderbilt University, Dept. Environmental and Water Resources Engr., Report 1, Oct. 1969.

51. Csanady, G.T., Water Research, Vol. 4, p. 79-114, 1970.

52. Sundaram, T.R., Easterbrook, C.C., Piech, K.R., and Rudinger, G., An Investigation on the Physical Effects of Thermal Discharges into Cayuga Lake, Cornell Aeronautical Lab., Report CAL VT-2616-0-2, November 1969.

53. Stolzenbach, K., and Harleman, D.R.F., An Analytical and Experimental Investigation of Surface Discharges of Heated Water, Massachusetts Institute of Technology, R.M. Parsons Lab., Report 135, February 1971.

54. Stefan, H., Hayakawa, N., and Schiebe, F.R., Surface Discharge of Heated Water, USEPA Water Pollution Control Research Series 16130 FSU 12/71, Dec. 1971.

56. Prych, E.A., A Warm Water Effluent Analyzed as a Buoyant Surface Jet, Svergis Meterologiska Och Hydrologiska Institut, Serie Hydrologi. Nr 21, Stockholm, 1972.

57. Shirazi, M.A., and Davis, L.R., Transactions ASME, J. of Heat Transfer, Vol. 98, p. 367-372, 1976.

58. Odgaard, J., Buoyant Surface Discharges in Natural Water Flows, Danish Hydraulic Institute, Environmental Hydraulics Section, July 1975.

59. Pritchard, D.W., Testimony of D.W. Pritchard for AEC Operating Permit of the Commonwealth Edison Zion Nuclear Electric Generating Station, Chicago, Ill., 1974.

60. Pritchard, D.S., Design and Siting Criteria for Once-through Cooling Systems. Presented at American Institute of Chemical Engineers 68th Annual meeting, Houston, Texas, March 1971.

61. Shirazi, M.A., A Critical Review of Laboratory and Some Field Experimental Data on Surface Jet Discharge of Heated Water, Pacific Northwest Environmental Research Lab. Working Paper 4, Corvallis, Oregon, March 1973. USEPA.

62. Shirazi, M.A., and Davis, L.R., Workbook of Thermal Plume Prediction, Vol. 2: Surface Discharge, USEPA Corvallis Environmental Research Lab., EPA-R2-72-005b, May 1974. (NTIS No. PB235841)

63. Sundaram, T.R., Sambuco, E., Kapus, S., and Sinnarwalla, A., Laboratory Investigation on Some Fundamental Aspects of Thermal Plume Behavior, Proceedings of the Waste Heat Management and Utilization Conference, p. 8B-181, University of Miami, Dept. of Mech. Engr., May 1977.

64. Sundaram, T.R., and Wu, J., Wind Effects on Thermal Plumes in Waterbodies, Flow Studies in Air and Water Pollution, Joint Meeting of the ASME Fluids Engineering Division and Applied Mechanics Division, Atlanta, Georgia, June 1973.

65. Pratt, D.T., Improved Turbulence Models in SYMJET and Related Computer Codes: Literature Review, Evaluation, and Recommendations for Implementation, Battelle Pacific Northwest Laboratories, BNWL-B-311, Sept. 1973.

66. Kolmogorov, A.N., Equations of Turbulent Motion of an Incompressible Turbulent Fluid, Izv, Akad, Nauk SSSR Ser Phys. VI, No. 1-2 Vol. 56, 1942.

67. Prandtl., Uber ein neues Formelsystem fuer die ausgebildet Turbulenz, Nacher. Ges. Wiss. Gottingen, Math.-Phys. Kl, 6-19, 1945.

68. Waldrup, W., and Farmer, R., J. Geophysical Research, Vol. 79(9), 1974.

70. Waldrup, W., and Farmer, R., Thermal Plumes for Industrial Cooling Water, Proceedings of the 1974 Heat Transfer and Fluid Mechanics Institute, L. R. Davis and R. E. Wilson (ed), Stanford Univ. Press, June 1974.

71. Leedenertse, J.J., and Liu, S., A Three-Dimensional Model for Estuaries and Coastal Seas: Vol. I, Principles of Computation, The Rand Corporation Report R-1417-OWRR, December 1973.

72. Leedenertse, J.J., and Liu, S., Vol. II, Aspects of Computation, The Rand Corporation Report R-1764-OWRT, June 1975.

73. Veziroglu,T., and Lee, S., Application of Remote Sensing for Prediction and Detection of Thermal Pollution. Clean Energy Research Institute, School of Engineering and Environmental Design, University of Miami, October 1974.

74. Sengupta, S., Lee, S., Venkata, H., and Carter, C., A 3-Dimensional Rigid-Lid Model for Thermal Prediction, Proceedings of Waste Heat Management and Utilization Conference, p. 6B-85, Univ. of Miama, Dept. of Mech. Engrg., May, 1977.

75. Lee, S., Sengupta, S., Tsai, C., and Miller, H., A 3-Dimensional Free Surface Model for Thermal Prediction, Proceedings of Waste Heat Management and Utilization Conference, p. 4A-23, Univ. of Miami, Dept. of Mech. Engrg. May 1977.

76. England, W., and Taft, J., A Three-Dimensional Computer Simulation Model for Tracing and Defining Thermal Pollution, Systems, Science, and Software Report SSS-IR-73-1680, LaJolla, Calif., May 1973.

77. Brady D., and Geyer, J., Development of a General Computer Model for Simulating Thermal Discharges in Three Dimensions, Johns Hopkins Univ. Det. of Geo. and Env. Engineering, Report No. 7, February 1972.

78. Macqueen, J.F., A Numerical Approach to Cooling Water Discharges, Part I: Theory, Central Electricity Research Lab. Report RD/L/N 15/71, Letherhead, England, 1971.

79. Macqueen, J.F., Heated Discharges. Part II: A Numerical Model, Central Electricity Res. Lab. Water Pollution Res. Lab., Tech. Paper No. 13, 166-170 (H.M.S.O.), 1972.

80. McGuirk, J.J., and Spalding, D.B., Mathematical Modeling of Thermal Pollution in Rivers. Int. Cong. Math. Models for Environmental Problems, Univ. of Southampton, Pentech Press, England, September 1975.

81. Spalding, D.B., THIRBLE Transfer of Heat in Rivers, Bays, Lakes and Estuaries. Dept. of Mech. Engrg., Imperial College, Heat Transfer Sec. Report HTS/75/4, London, March 1975.

82. Rodi, W., and Rastogi, A., Simulation Von Warm-Wasseneinleitungen in Einen Fluss in Mathematischen Modell, In: Waermeeinleitung in Stroemungen, Heransgeber: C. Zimmerman, H. Kobus and P. Geldner, Univ. Karlsruhe, October 1974.

83. McGuirk, H.H., and Rodi, W., Calculation of Three-Dimensional Heated Surface Jets. Proceedings of the 1976 ICHMT Seminar on Turbulent Buoyant Convection, Dubrovnik, Yugoslovia, August 1976.

84. Paul, J.F., and Lick, W.J., A Numerical Model for a Three-Dimensional Variable Density Jet, School of Engrg., Case Western Reserve Univ., Report FTAS/TR 73-92, January 1974.

85. Spraggs, L., and Street, R., Three-Dimensional Simulation of Thermally Influenced Hydrodynamic Flows, Dept. of Civil Engrg., Stanford Univ., Tech. Report 190, January 1975.

86. Chien, C.J., and Schetz, J.A., Numerical Solution of a Buoyant Jet in a Cross Flow, VPSU, Dept. of Aero. and Ocean Engr., Report VPI-AERO-001, Blacksburg, Virginia, May 1973.

87. Trent, D.S., A Numerical Model for Two-Dimensional Hydrodynamics and Energy Transport, (VECTRA-code), Battelle-Northwest Lab., Report BNWL-1803, 1973.

88. Policastro, A.J., and Dunn, W.E., Numerical Modeling of Surface Thermal Plumes, ICHMT Int. Adv. Course on Heat Disposal from Power Generation, Dubrovnik, Yugoslavia, August 1976.

89. Basanquet, C.H., and Pearson, J.L., Trans. Faraday Soc., Vol. 32, p. 1249-1264, 1936.

90. Symposium of Plume Behavior, Int. J. Air Water Poll., Vol. 10, p. 343-409, 1966.

91. Symposium on the Dispersion of Chimney Gases, Int. J. Air Water Poll., Vol. 6, p. 85-100, 1962.

92. Symposium on Chimney Plume Rise and Dispersion: Discussions, Atmos. Environ., Vol. 1, p. 425-440, 1967.

93. Briggs, G.A., Plume Rise, AEC Critical Review Series, Oak Ridge National Laboratory 1969. (NTIS No. TID-25075).

94. Pasquill, R., Meteorol. Mag., Vol. 90, p. 33-49, 1963.

95. Gifford, F.A., Nuclear Safety 2, Vol. 4, p. 47-51, 1961.

96. Turner, D.B., Workbook of Atmospheric Dispersion Estimates, U.S. Public Health Service, Report 999 AP-26, Revised 1969.

97. Roffman, A., Drift Losses from Saltwater Cooling Towers - Some Atmospheric Considerations, Amer. Geo. Union, 54th Annual Meeting, Wash. D.C., April 1973.

98. Roffman, A. and Grimble, R.E., Drift Deposition Rates from Wet Cooling Systems, Cooling Tower Environment - 1974, ERDA Symposium Series 35, Oak Ridge, Tenn., 1975.

99. Israil, G.W., and Overcamp, T.J., A Drift Deposition Model for Natural Draft Cooling Towers, Cooling Tower Environment - 1974, ERDA Symposium Series 35, Oak Ridge, Tenn., 1975.

100. Overcamp, T.J., and Houtl, D.P., Atmos. Environ., Vol. 5, p. 751-765, 1971.

101. Slinn, W.G.N., An Analytical Search for the Stochastic-Dominated Process in the Drift-Deposition Problem, Cooling Tower Environment - 1974, ERDA Symposium Series 35, Oak Ridge, Tenn., 1975.

102. Cooling Tower Environment - 1974, ERDA Symposium Series 35, US AEC Tech. Information Ctr., Oak Ridge, Tenn., 1975.

103. Cooling Tower Plume Modeling and Drift Measurement - A Review of the State-of-the-art, ASME, 1975.

104. Wessels, H.R.A., and Wisse, J.A., Atmos. Environ., Vol. 5, p. 743-750, 1971.

105. McVehil, G.E., Evaluation of Cooling Tower Effects at Zion Nuclear Generating Station, Final Report, Sierra Research Corp., Boulder, Colorado, 1970.

106. Altomare, P.M., The Application of Meteorology in Determining the Environmental Effects of Evaporative Heat Dissipation Systems, 64th Annual Air Pollut. Control Assoc., No. 71-56, Atlantic City, N. J., 1971.

107. Hanna, S.R., J. Appl. Meteor., Vol. 11, p. 793-799, 1972.

108. Wigley, T.M.S., and Slawson, P.R., J. Appl. Meteor., Vol. 10, p. 253-259, 1971.

109. Csanady, G.T., J. Appl. Meteor., Vol. 10, p. 36-42, 1971.

110. Hann, S.R., Meteorological Effects of the Mechanical Draft Cooling Towers of the Oak Ridge Gaseous Diffusion Plant, ATDL Paper No. 89, Oak Ridge, Tenn., 1974.

111. Slawson, P.R., Coleman, J.H., and Frey, J.W., Some Observations on Cooling Tower Plume Behavior at the Paradise Steam Plant, Cooling Tower Environment - 1974, ERDA Symposium Series 35, Oak Ridge, Tenn., 1975.

113. Meyer, J.H., Eagles, T.W., Kohlenstein, L.C., Kagan, J.A., and Stanbro, W.D., Mechanical Draft Cooling Tower Visible Plume Behavior: Measurements, Models, Predictions, Cooling Tower Environment - 1974, ERDA Symposium Series 35, Oak Ridge, Tenn., 1975.

114. Wigley, T.M.L., and Slawson, P.R., Atmos. Environ., Vol. 9, p. 437-445, 1975.

115. Hanna, S.R., Prediction and Observed Cooling Tower Plume Rise and Visible Plume Length at the John E. Amos Power Plant, Oak Ridge ATDL Report 75/21, Oak Ridge, Tenn., 1976.

116. Weil, R., J. of Applied Meteor., Vol. 13, p. 435-443, 1974.

117. Tsai, Y.J., and Huang, C.H., Evaluation of Varying Meteorological Parameters on Cooling Tower Plume Behavior, Symposium on Atmospheric Diffusion and Air Pollut., AMS, p. 408-411, Boston, Mass., 1972.

118. Winiarski, L.D., and Frick, W.F., Cooling Tower Plume Model, USEPA Corvallis Environmental Research Lab., EPA-600/3-76-100, September 1976.

119. Lee, J.L., Atmos. Environ., Vol. 11, 1, 749-759, 1977.

120. Wu, F.H.Y., and Koh, R.C.Y., Mathematical Model for Multiple Cooling Tower Plumes, California Institute of Tech., W.M. Keck Lab. Report KH-R-37, July 1977.

121. Macduff, R.B., and Davis, L.R., Analysis of Moisture Effects for Multiple Cell Mechanical Draft Cooling Towers, Proceedings of the 2nd AIAA/ ASME Thermal Physics and Heat Transfer Conference, Palo Alto, Calif., May 1978.

122. Briggs, G.A., Plume Rise From Multiple Sources, Cooling Tower Environment 1974, ERDA Symposium Series 35, Oak Ridge, Tenn., 1975.

123. Policastro, A.J., Carhart, R.A., and DeVantier, B., Validation of Selected Mathematical Models for Plume Dispersion from Natural-Draft Cooling Towers, Waste Heat Management and Utilization Conference, Miami Beach, May 1977.

124. LaVerne, M.E., Oak Ridge Fog and Drift Program (ORFAD) User's Manual, ORNL/TM-5021, Oak Ridge, Tenn., 1976.

125. Frick, W.E., The Influence of Stratification on Plume Structure, Master's Thesis, Oregon State Univ., June 1975.

126. Batty, K.B., Sensitivity Tests with a Vapor Plume Model Applied to Cooling Tower Effluents, Master's Thesis, Penn State Univ., November 1976.

127. Winiarski, L.D., and Frick, W.E., Methods of Improving Plume Models, Cooling Tower Environment - 1978, University of Maryland, College Park, Maryland, May 1978.

128. Kennedy, J.F., and Fordyce, H., Plume Recirculation and Interference in MechanicalDraft Cooling Towers, Cooling Tower Environment - 1974, ERDA Symposium Series 35, Oak Ridge, Tenn., 1975.

129. Hoydysh, W.G., Strom, G.H., and Cirillo, R.R., An Experimental Investigation of Air Recirculation Characteristics of Air Cooled Condensor Arrays on Process Building, Goodyear Atomic Corp. Report GAT-Z-4128, Vol. I, July 1971.

130. Chan, T L., et al., Plume Recirculation and Interference in Mechanical Draft Cooling Towers, University of Iowa Institute of Hydraulic Research, IIHR-160, April 1974.

131. Pell, J., The Chalk Point Cooling Tower Project., Cooling Tower Environment - 1974, ERDA Symposium Series 35, Oak Ridge, Tenn., 1975.

132. Macduff, R.B., and Davis, L.R., Near Field Observations of Mechanical Draft Cooling Towers, Proceedings of the 2nd AIAA/ASME Thermal Physics and Heat Transfer Conference, Palo Alto, Calif., May 1978.

133. Orgill, M.M., Critical Review of Wind Tunnel Modeling of Atmospheric Heat Dissipation, Battelle-Pacific Northwest Lab., BNWL-2221, May 1977.

134. Bugler, T.W. III., and Tatinclaux, J.C., Scaling Effects on Cooling Tower Model Studies, University of Iowa Institute of Hydraulic Research, IIHR-168, September 1974.

135. Weinstein, A.I., and Davis, L.G., A Parameterized Numerical Model of Cumulus Convection, NSF GA777 No. 11, Penn State Univ., 1968.

136. Stephen, D.W., and Moroz, W.J., Plume Rise from Wet Cooling Towers in Strong Winds, Penn State Univ., Engr. Res. Bull. B-107, 1972.

137. Junod, A., Hopkirk, R.J., Schneiter, D., and Haschke, D., Meteorological Influences of Atmospheric Cooling Systems as Projected in Switzerland, Cooling Tower Environment - 1974, ERDA Symposium Series 35, Oak Ridge, Tenn., 1975.

138. The KUMULUS Model for Plume and Drift Deposition Calculations for Indian Point Unit No. 2 - Final Report, Environmental Systems Corp., Knoxville, Tenn., October 1977.

139. Taft, J., Numerical Model for the Investigation of Moist Buoyant Cooling-Tower Plumes, Cooling Tower Environment - 1974, ERDA Symposium Series 35, Oak Ridge, Tenn., 1975.