TECHNICAL GUIDANCE FOR USE IN THE DEVELOPMENT OF A COMBINED SEWER SYSTEM OPERATIONAL PLAN

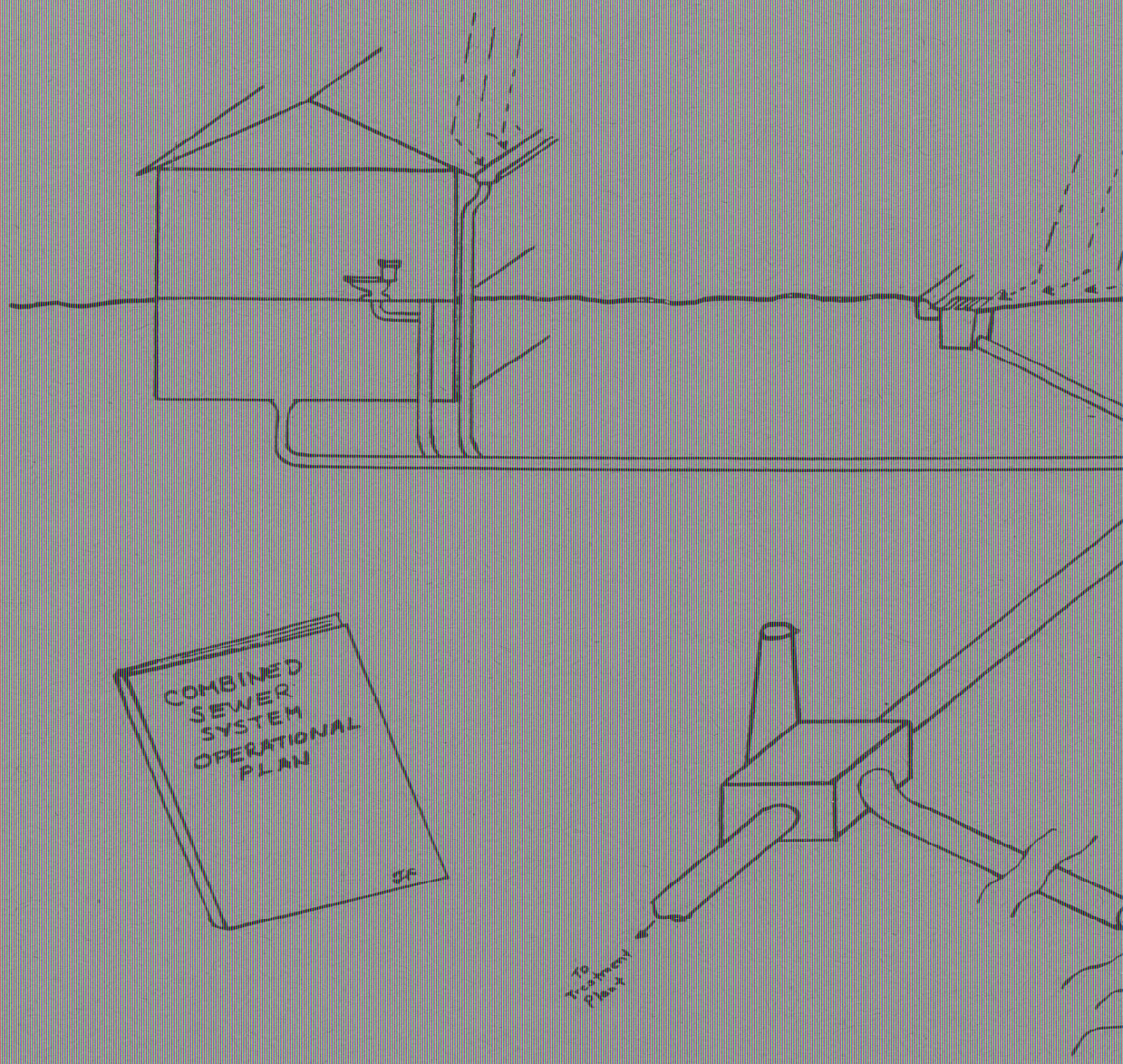

U.S. Environmental
Protection Agency, Region V
Municipal Facilities Branch
Design/Construction Unit
Special Evaluation Project Team

September 1986

This Page Intentionally Blank

ACKNOWLEDGEMENT

The document, TECHNICAL GUIDANCE FOR USE IN THE DEVELOPMENT OF A COMBINED SEWER OPERATIONAL PLAN, was prepared for use by small to moderately sized municipalities.

This document was authored principally by Ernesto Lopez and Thomas Poy who also conducted the research for the information contained therein. Contributions were made by Roger Coppock, Stephen Poloncsik, and Charles Pycha. Assistance was provided by Eugene Chaiken, Chief of the Technical Support Section, EPA-Region V; Richard Field, EPA-Oil & Hazardous Materials Spills Branch (Edison, New Jersey); and the Regional CSO Committee which includes - Phil Argiroff, John Coll, Paul Horvatin, Mike Lin, Michael MacMullen, Almo Manzardo, Fred Micke, Mike Mikulka-Chairperson, Charles Orzehoskie, Jerry Rogers, and Donald Schregardus.

Special acknowledgement is made of the guidance provided in the development of this document by Richard Zdanowicz, Chief of the Design/Construction Unit (5WFT) and Charles Pycha.

PREFACE

This combined sewer overflow (CSO) technical guidance document represents an examination of existing state-of-the-art CSO technologies. It presents a variety of tools which can be used to address the operation and optimization of an existing combined sewer system. A variety of demonstrated devices and techniques are provided so that a multi-faceted approach can be developed for individual projects which may require integration of various approach methodologies, management, control and treatment techniques, along with an annotated bibliography for detailed references. This document in itself does not present a detailed methodology but rather presents information to understand and develop a CSO control strategy.

This document is primarily aimed at small to moderate sized communities. Though the information presented is applicable to larger communities, neither more complex and technically sophisticated control schemes, nor capital intensive CSO control approaches are emphasized.

TABLE OF CONTENTS

		PAGE
ACKNOWLEDGEMENT		i
PREFACE		ii
TABLE OF CONTENTS		iii
LIST OF FIGURES AND TABLES		v
CHAPTERS		
CHAPTER 1	INTRODUCTION	1
	Scope	1
	Operational Plan	1
	Major Operational Plan Chapters	2
	The Stormwater Problem and the Development of Sewer Systems	2
	Combined Sewer System	3
	Problems Associated With Combined Sewer Systems	3
	Combined Sewer Overflow Controls	6
CHAPTER 2	COMBINED SEWER SYSTEM INVENTORY	8
CHAPTER 3	ADMINISTRATIVE ASPECTS	13
CHAPTER 4	SOURCE CONTROLS	17
	Street Cleaning	17
	Catchbasin Cleaning	18
	Sewer Flushing	18
CHAPTER 5	SEWER SYSTEM CONTROLS	20
	Regulators	20
	Conventional Designs	20
	Static Regulators	20
	Manually Operated Gates	20
	Fixed Orifices	22
	Leaping Weirs	22
	Side-Spill Weirs	23
	Internal Self-Priming Siphons	23
	Semi-Automatic Regulators	23
	Float Operated Gates	23
	Tipping Gates	25
	Cylindrical Gates	25
	Automatic Regulators	26
	Cylinder-Operated Gates	26
	Motor-Operated Gates	26

		PAGE
	Improved Regulator Designs	28
	Fluidic Regulators	28
	Vortex Regulators	28
	Swirl Regulators/Concentrators	31
	Helical Bend Regulators/Concentrators	31
	Stilling Pond Regulators	32
	High Side-Spill Weirs	32
	Tide Gates	32
	Broadcrested Inflatable Fabric Dams	34
	Leaping Orifice Flow Regulating Devices	34
	Scepter Flow Regulators	36
CHAPTER 6	TREATMENT PLANT OPTIONS	37
CHAPTER 7	MODELS FOR COMBINED SEWERS	39
	Introduction	39
	Selection of Mathematical Models	40
	Application of Mathematical Models	40
	Storm Water Management Model - Level I	41
	Water Resources Engineers Stormwater Management Model	44
	Ch2M-Hill Wastewater Collection System Analysis Model (SAM)	44
	British Road Research Laboratory Model (BRRL)	45
	Chicago Flow Simulation Program	45
	Dorsch Consult Hydrograph-Volume Method	46
	University of Massachusetts Combined Sewer Control Simulation Model	46
	Chicago Runoff and Pollution Model	46
	Hydrcomp Simulation Program	46
CHAPTER 8	REGULAR MAINTENANCE PROGRAM	47
CHAPTER 9	PREPARATION OF AN OPERATIONAL PLAN	48
ANNOTATED BIBLIOGRAPHY		50

LIST of FIGURES AND TABLES

NO.		PAGE
1	Typical Municipal Combined System Operation	5
2	Typical Static Regulators	21
3	Typical Semi-Automatic Regulators	24
4	Typical Automatic Regulators	27
5	Schematic Arrangement of a Fluidic Regulator	29
6	Vortex Regulator	29
7	How a Hydrobrake Regulator Device Operates	30
8	Isometric View of Swirl Regulator/Concentrator	30
9	Isometric View of Helical Bend Regulator	30
10	Stilling Pond Regulator	33
11	High Side-Spill Weir	33
12	Inflatable Fabric Dam-An Artist Conception	35
13	Determination of Optimal Combination of Storage/ Treatment Alternatives	43
TABLE 1	Different Types of Samples	10
TABLE 2	Partial Summary of Predictive Procedures for Estimating Daily Dry Weather Sewage Collection System Deposition Loadings	19

CHAPTER 1 - INTRODUCTION

SCOPE

The purpose of this document is to present guidance which can be used by municipalities to develop a combined sewer overflow (CSO) operational plan. This plan is tailored to the local government's complete wastewater treatment system, which will include mechanisms and specific procedures to ensure that: the entire sewerage system is operated so as to maximize treatment; the sewerage system storage capacity during wet weather is fully utilized; all dry weather flows are treated to the level specified in the NPDES permit; the greatest quantity of wet weather flows receive maximum possible treatment; and, the sewerage system is adequately maintained. This use of management techniques, via planned operation and maintenance procedures with assigned responsibilities, on the existing system to effectively control discharges is intended to avoid more expensive structural controls.

OPERATIONAL PLAN

The development of an operational plan is a site specific undertaking. Depending upon the municipality's wastewater treatment system, different tasks will need to be performed. An assumption of this document is that the community has a basic knowledge of the physical system necessary to make decisions concerning the elements of the operational plan. If not, system maps will need to be reviewed. If none are available, base maps will need to be developed. It is important to become familiar with the system's operation so that major system restrictions and overflows can be located. Also, pollutant data is needed so high loading areas may be identified. If this data is not available, in-system flow monitoring will need to be done on the sewer system and/or the overflow points.

The evaluation of the above system information will enable a municipality to develop an operational plan to effectively manage its combined sewer system. The operational plan should include as much detail on the management procedures as possible. Specific responsibilities should be assigned, operating procedures for dry and wet weather periods should be spelled out, and maintenance procedures and schedules should be listed in detail. Key items that must be detailed are:

1) Measures to ensure dry weather bypasses or overflows do not occur.

2) Specific system maintenance responsibilities and any associated record keeping which is necessary to maintain sewer integrity and to minimize infiltration.

3) Specific procedures for the implementation of any source control programs determined to be effective in reducing the community's combined sewer overflow problem.

4) Specific practices and procedures by which each particular regulator is set and maintained to maximize the use of the storage capacity of the combined sewers.

5) Any administrative measures taken to prevent or delay unwanted stormwater from entering the combined sewer system with the responsible government entities for implementing these measures identified.

6) Specific operational steps to be taken at the treatment plant in order to maximize the wet weather flow receiving at least partial treatment.

7) The minor structural changes necessary to eliminate system restrictions which prohibit the full use of downstream sewer capacity.

MAJOR OPERATIONAL PLAN CHAPTERS

The operational plan should be a written document that is available to the appropriate personnel, similar to the treatment facilities' O&M manual. The operational plan must include the following major chapters:

1. System Inventory - a physical knowledge of what the system consists of and how it operates.

2. Administrative Aspects - enforcement of agreements, permits, and legislative enactments which govern the use of the system.

3. Maintenance - detailed maintenance procedures for the existing and proposed facilities.

4. Control Strategy - a detailed description of the steps to be taken to minimize overflows.

5. Schedule of Activities - a schedule of future upgrading and modification.

A more detailed discussion of the operation plan components is presented in Chapter 9 of this document.

THE STORMWATER PROBLEM AND THE DEVELOPMENT OF SEWER SYSTEMS

Water pollution from combined sewer overflows, surface runoff, and overflows of municipal sewage resulting from the infiltration of precipitation represent all aspects of the stormwater problem. Because the disposal of stormwaters contributes large quantities of pollutants to nearby receiving waters, a need exists to resolve this problem. In ancient Rome, this need caused the Romans to construct large underground drains to remove excess stormwaters. As cities in Europe and North America developed, extensive drainage systems for stormwater runoff were provided. These early collection systems were used exclusively for stormwater collection and were poorly designed and constructed, resulting in infiltration. Human wastes were disposed of by the utilization of privies

and "night soil" transport. The increase in population, and the growing realization of the interrelationship between untreated sewage and the number of epidemics caused a change in the law in 1815 (London) to allow sanitary wastes to be disposed of in storm sewers. Thus, at this point of sewer system development, storm sewers became combined sewers. However, despite this advancement in the technology of collecting wastes, the problem of untreated wastes remained. It wasn't until the latter part of the nineteenth century that municipalities began the practice of treating wastes prior to discharge. In addition, the concept of intercepting sewers was developed to capture municipal wastes and transport them to a central location for treatment. For the past 25 years, due to the adverse effects of combined sewer overflows on receiving waters, a large number of municipalities required that separate sewer systems be installed in newly-constructed areas.

COMBINED SEWER SYSTEM

As indicated above, combined sewers came into use in 1815. Today, although new combined sewer systems are infrequently designed, some municipalities continue to add new combined sewers to their existing sewer system. A combined sewer is defined as a sewer that is both a sanitary sewer and a storm sewer. In other words, it carries in a single conduit both domestic wastes and stormwater runoffs.

One of the most important components of a combined sewer system is the intercepting sewer. Large sewer systems oftentimes have a network of intercepting sewers. The excess volume of an intercepting sewer is not constant but varies depending on the volume of dry weather sanitary sewage flow. Another important component in a combined sewer system is the regulator. Regulators in the sewers channel dry weather flows into the intercepting sewers and thence to the wastewater treatment facility. They also protect the treatment facility from overloading and the sewer system from backups whenever the flows become excessive during a storm by allowing overflows to the receiving waters. This component is the weakest element in a combined sewer system. More information will be given on specific types of regulators later in this guidance document.

PROBLEMS ASSOCIATED WITH COMBINED SEWER SYSTEMS

The current problems generally identified with combined sewers include the following: pollution of receiving waters as a result of too frequent overflows; dry weather overflows; prolonged overflows; carryover of solids; disruption of wastewater treatment facilities due to the concentration of solids and debris in combined sewage; and, washout of secondary treatment process as a result of high hydraulic loading.

Dry weather flows are normally processed by the wastewater treatment facilities in municipalities where combined sewers exist. During dry weather periods, the sewer system is hydraulically capable of handling the sewage flows. However, upon the occurrence of heavy rainfall, the flow is increased to such an extent by the addition of stormwater that the sewers are often hydraulically incapable of handling the cascade of water that floods into

the lines. Under these conditions, current wastewater treatment facilities do not have sufficient capacity to treat these flows. In order to relieve the sewer system and to protect the treatment facility operation, overflows are employed to direct all excess flow to receiving waters. This expedient reduces pressure on the system and aids in avoiding backup into the streets. However, there is an adverse effect on the receiving waters. As much as 90 percent of the total wastes never reaches the treatment facility and is poured into the receiving waters, unprocessed and bacteria laden. One of the worst aspects of CSOs is that during a "first flush" event, the gross biochemical oxygen demand (BOD_5) of this wastewater may be greater than that of the dry weather flow. Very high concentrations of organics, suspended solids, grease, and other pollutants are often found in overflow samples collected during the earliest part of an overflow event from combined sewers. During dry weather periods, when the flow in the sewer system is only a low percentage of the sewer capacity, deposits of silts, sludge, and other solids tend to accumulate at joints and along sections of sewer with low or adverse slopes. When the sewer flow increases during a rainstorm, this solid matter, which exerts a high organic loading, will be flushed out. Depending upon the sewer system, rainfall intensity, and the number of antecedent dry days, a "first flush" effect may result. If it does occur, it lasts for a few minutes or a few hours. Figure (1) illustrates what occurs in a typical municipality and its sewer system during a rainstorm event.

As indicated above, combined sewer overflows are significant contributors of many pollutants to receiving waters. Whether or not these pollutant loads cause sufficient adverse impacts to justify some degree of control must be decided upon with site specific evaluations. However, characterization of CSOs, in terms of concentrations and loads provides useful rough-cut, order of magnitude indications of potential receiving water impacts. Obviously, impacts are site specific and the extent of the problems will depend heavily on local conditions. Individual site conditions will influence both the mass loadings of pollutants and the ability of the receiving water to assimilate the loading. Problems result when loadings exceed the assimilative capacity of the receiving waters and its use is impaired.

The general appearance or the actual presence of specific, objectionable conditions makes the receiving waters unattractive or repugnant to those in its proximity. In addition, particulate matter causes the formation of sediment deposits that smother bottom dwelling aquatic organisms.

The classical problem related to organic pollution of receiving waters caused by combined sewer overflows is the consumption of instream oxygen by the bacterial breakdown of the organic material. Dissolved oxygen depletion may or may not be apparent. The resulting low levels of oxygen will destroy sensitive species of fish and aquatic organisms. In the extreme case, discoloration of the receiving waters, gas formation, and odors are apparent. The presence of unoxidized nitrogen compounds is, in some cases, a significant element in water quality problems related to low dissolved oxygen levels.

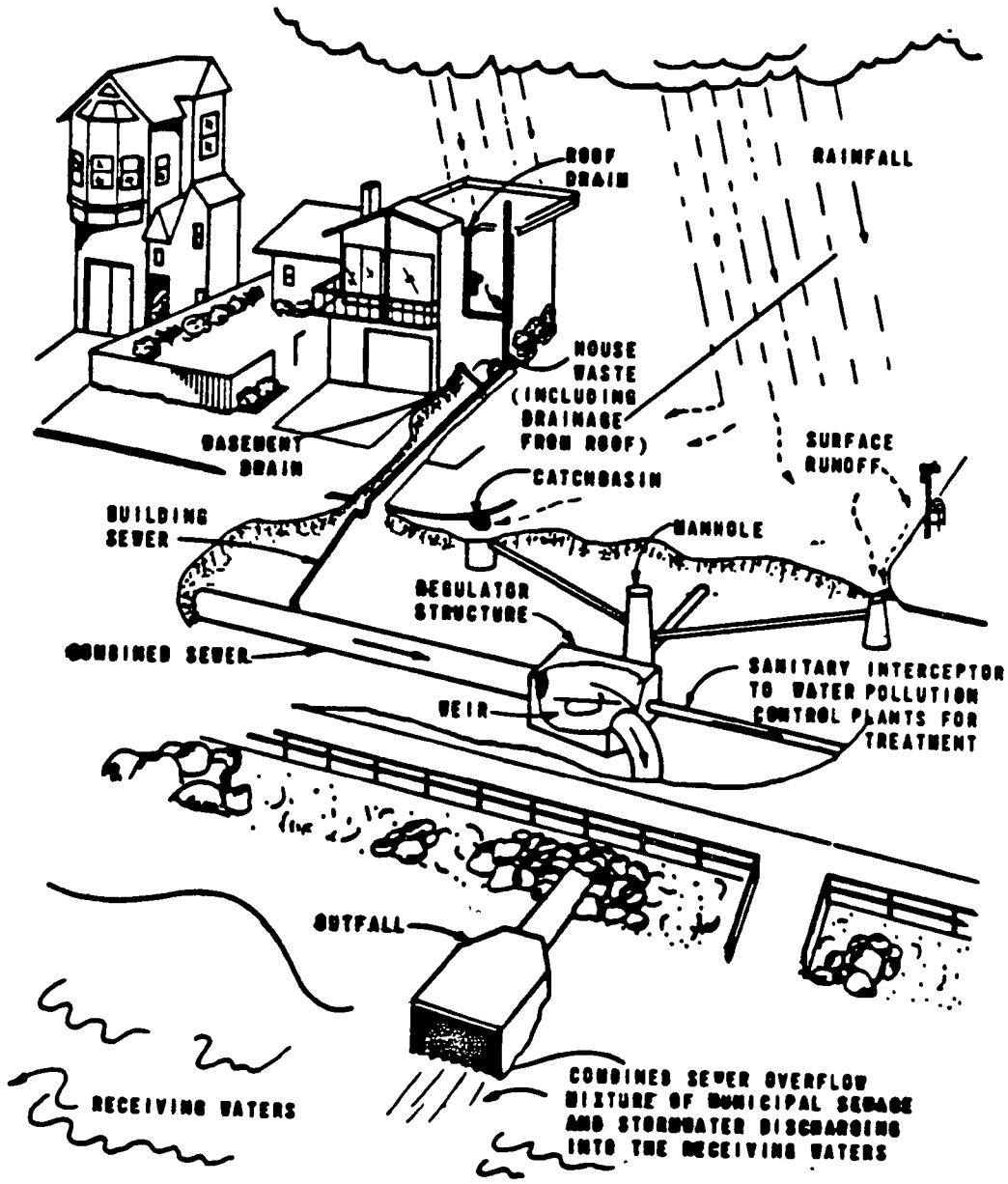

FIGURE (1): Typical Municipal Combined Sewer System Operation

SOURCE: REFERENCE (57)

The presence of excessive concentrations of objectionable microorganisms can result in the limited or non-use of the receiving waters for water supply and recreational purposes. Several investigators have measured significant levels of fecal coliform contamination in receiving waters as a result of CSOs. It has been found in the Milwaukee River project study that CSOs were a major source of fecal coliforms. (55) In addition, a study conducted at Syracuse, New York indicated that the only water quality parameter which was significantly and adversely affected by CSO's in Onondaga Lake was fecal coliform. (55)

The discharge of nutrient materials by CSOs and urban runoff may fertilize or stimulate excessive or undesirable forms of aquatic weeds or algae (eutrophication) which can be aesthetically objectionable, cause dissolved oxygen problems, and in extreme cases, can interfere with recreational use, and create odors and heavy mats of floating material at shorelines.

On the subject of toxicity, problems or impacts fall into two categories:

1) Metals, pesticides, and persistent organics will exhibit a subtle, long-term effect on the environment in areas well removed from the area under consideration by the discharge of small quantities which gradually accumulate in sensitive areas (sediments). CSOs have been known to contribute metals such as cadmium, chromium, mercury, zinc, aluminum, persistent organics (organic carbon, chlorinated hydrocarbons), oil, and grease to receiving waters. Analyses and investigations were done on sediments. One result of an investigation done on bottom sediments in the Saddle River, upstream and downstream of Lodi, New Jersey showed an increase in metal concentrations in downstream samples. (55)

2) Ammonia and by products of effluent chlorination which can exhibit a local, more immediate impact.

It has been shown that the impact of combined sewer overflows on receiving waters is adverse. It affects the uses of the receiving waters, its appearance, and its aquatic life. As such, the need exists to minimize discharges from combined sewer overflows through the effective management of the complete wastewater treatment system.

COMBINED SEWER OVERFLOW CONTROLS

Technologies exist to control pollution from combined sewer overflows and stormwater runoff. They can be grouped into three main categories. A brief discussion of each category follows:

(1) SOURCE CONTROLS include those measures for reducing pollution from combined sewer overflow and stormwater which involve actions within the urban drainage basin before urban runoff reaches the sewer system, and affecting the quantity and quality of the aforementioned pollution. Examples include surface flow attenuation, use of porous pavement, erosion control, chemical use restrictions, pretreatment, improved sanitation practices (street cleaning), catchbasin cleaning, and sewer line flushing.

(2) COLLECTION SYSTEM CONTROLS are intended to ensure that the combined sewer system operates as efficiently as possible and that maximum advantage is taken of opportunities to reduce combined sewer overflows. Some control examples are the use of regulator devices, infiltration/inflow control, use of polymer (friction reducing) flow additives, in-line storage, and sewer separation.

(3) TREATMENT CONTROL removes pollutants from combined sewer flows. Off-line storage (earthen basins, concrete basins) and wastewater treatment facilities utilizing primary treatment of excess flows and high-rate granular filtration are examples.

The remaining Chapters of this guidance document will be devoted to more detailed discussions of some of these combined sewer overflow control technologies.

CHAPTER 2 - COMBINED SEWER SYSTEM INVENTORY

Large quantities of pollutants are discharged into receiving waters during wet weather periods as a result of combined sewer overflows. Combined sewer overflows, as indicated previously, represent one of the aspects of the stormwater problem. To deal effectively with this problem, a municipality needs to develop and implement a stormwater management program which would include the elimination or reduction of combined sewer overflows. There are several tasks involved with developing such a program, including: the establishment of objectives; development of a data base; understanding the operation and response of the combined sewer system; identification of drainage areas; hydraulic analysis; review of meteorlogical data; monitoring of flows and taking of samples; selection of mathematical models; and, discussion of stormwater (combined sewer overflow) control alternatives.

It is important for a municipality to be knowledgeable about its combined sewer system, including operation, maintenance, and response to different meteorological occurences. The following paragraphs discuss the type of data needed to aid a municipality in gaining first-hand knowledge about its sewer system.

First, the collection of basic data is required in order for the municipality to become knowledgeable about its sewer system. This data can be obtained through a carefully patterned and executed interview program. The interviews must be patterned to contact sewer, public works, and engineering personnel, covering officials, on-the-line maintenance and operation crews, health officials, plumbing and building inspectors, and others. The data includes, but is not limited to the following: geographical, geological, topographical, and hydrological data; known physical condition of the sewer system, manholes, and all appurtenances; age, length, materials, sizes, and depths of sewers; maintenance practices, problems, and system failures; treatment plant flow records and charts; pumping station flow records; location of overflows and associated operating experience and records; identification of sewer system problem areas; available combined sewer system maps; ground water levels for all seasons, with correlation to rainfall; quality of local receiving waters and required effluent or water quality standards; and, existing ordinances governing inflow connections to sewers and enforcement programs and policies, as well as estimate of the extent and significance of such inflow connections. (44)

A municipality should have maps of its sewer system (combined, sanitary, storm) available in its records. If none exist, or if existing maps are out-dated, then an effort should be made by the municipality to either update existing maps or prepare new ones. Existing maps, when updated, should be augmented with any new construction and revisions. New maps can be prepared from as-built records, additional underground surveys, and other data. Sewer maps should be drawn to scale and should indicate sewer sizes, direction of flow, manhole locations, and other major sewer system elements (e.g., points of overflow, location of regulating structures, and control structures). One map that can be prepared and used during physical surveys and in the development of sewer system controls is a "flow line" map. This map depicts the sewer system in

profile view and shows the system slope characteristics. Another mapping task is the division of the sewer system into sub-basins. The establishment of the sub-basins should be based on system layout, drainage areas, main sewers and tributary lines, system configurations and other local factors, and system conditions. Finally, there should be a selection of key hydraulic locations in the sewer system where flows can be monitored and gaged. (44)

A hydraulic analysis of the sewer system enables a municipality to determine the maximum capacities of the sewers and the time of concentration, which may be used in the computation of stormwater runoff rates. The portion of the sewer system capacity available for carrying stormwater runoff is a function of the total hydraulic capacity of the sewer system as determined by: the pipe size, slope, and material; quantity of flows; and, the level to which a particular sewer can surcharge without causing an overflow, basement flooding, or other damage. Capacity is also effected by the backwater effect of the downstream sewers. The time of concentration consists of two parts: time of overland flow and the time of concentration in the sewer. The time of overland flow is dependent upon the length of travel from the most remote area of the sub-basin area to the nearest sewer inlet, the type of ground cover, and the slope of the land. The time of concentration in the sewer is equal to the travel time from the most remote inlet in the system to the point where the last inlet lateral joins the main sewer. These times are computed from velocities in the pipes, assuming that these pipes are flowing full. (50)

Oftentimes, a municipality experiencing a combined sewer overflow problem lacks the necessary overflow and meteorological data. The most important parameters that should be locally monitored include: the in-line flows at various locations, major overflow locations, and rainfall data. In addition, it is desirable that pollutant concentrations be associated with the overflow. In this manner, the total mass loading of contaminants discharged to the receiving waters can be computed. Rain gauges located throughout the sewer system service area can characterize the rainfall in terms of duration, intensity, and volume. As a result of having knowledge of this information, statistical relationships can be developed which will relate rainfall and the overflow volumes and quality. These relationships are essential to the municipality in that it not only aids the municipality in the evaluation of combined sewer overflow control strategies and abatement alternatives but also provides information as to the effects of overflows and rainfall on its sewer system. (12)

Sampling and flow measurements enable a municipality to determine the average strength and volume of the wastes at different times of the day and year. There are two types of samples - discrete and composite. Discrete samples characterize water quality at a particular instant of time. Composite sampling is an attempt to synthesize a sample which will represent the average discharge characteristics over a period of time. Table 1 shows the different types of samples that can be obtained. Most important to any sampling program are the determination and definition of purpose, program timing, identification of specific data requirements, and the evaluation of the costs involved with respect to the quantity and quality of the data required. It is advised that a careful study of costs, distinguishing between data collection, subsequent

TABLE 1: DIFFERENT TYPES OF SAMPLES

Discrete Samples	
Random grab	- one sample obtained at any time at any point by any available method.
Unit time	- a series of samples taken during a discharge event at equal time intervals.
Unit volume	- a series of samples taken during a discharge event at equal volume increments. A flow recorder and totalizer is required for this type of sampling.

Composite Samples
Constant time - constant volume: samples of equal volume are taken at equal increments of time and composited to make an average sample.
Constant time - volume proportional to flow increment: samples are taken at equal increments of time and are composited proportional to the volume of flow since the last sample was taken.
Constant time - volume proportional to flow rate: samples are taken at equal increments of time and are composited proportional to the flow rate at the time each sample was taken.
Constant volume - time proportional to flow increment: samples of equal volume are taken at equal increment of flow and composited.

SOURCE: REFERENCE (34)

analyses, and reporting should be made prior to commencing a sampling program. If the number of samples is large, and the program is to continue over a long period of time consideration should be given to the use of automatic analyzing equipment. As the sampling program progresses, it may be possible to reduce the number of samples collected or analyses performed on the basis of a periodic review of the data obtained. The adequacy of a sampling program is dependent upon the optimum selection of sampling sites. There are general guides to such a selection, namely: (1) the site provides maximum accessibility and safety; (2) samples are taken from a point one-third the water depth from the bottom; (3) velocity of flow at the sample point should, at all times, be sufficient to prevent deposition of solids; (4) care should be taken when collecting samples to avoid creating excessive turbulence which may liberate dissolved gases and yield an unrepresentative sample; and, (5) there should be a straight pipe length of six sewer diameters upstream of the site. Awareness of the general character of sewer flows and flow modes in combined sewers and knowledge of the variability of pollutant concentrations lead to an understanding of how best to select sampling sites. With respect to the selecton of sampling equipment, a municipality should consider the following factors: range of wastewater conditions including rate and frequency of change, availability of recorded flow data, need for the determination of instantaneous or average conditions, or both, volume of samples required, need for sample preservation, estimated size of suspended material, need for automatic starting and stopping controls, and need for mobile or permanent installation. The design of the sampling equipment is not complex, and should be such that maintenance and trouble-shooting of the equipment are relatively simple tasks. It should also have maximum reliability. Finally, sampling equipment should be capable of collecting a representative sample (either discrete or composite) of sufficient size for the necessary analyses, operating in the mode required under a variety of hositle environmental conditions and sewer flow ranges, and unattended operation for extended periods of time. (57)

Accurate flow measurement is a basic requirement not only in determining how a combined sewer system operates, but also in the design of such a system. The methods used are classified as either direct discharge or velocity-area types. Direct discharge methods (a control secton with a differential head measurement) used in conventional, dry weather facilities are simple, proven and well-documented. Weirs, flow tubes, flumes, venturi and magnetic flow meters, with associated sensing and recording appurtenances, are examples of such devices. Most of these devices induce head losses to the flow stream, generally in proportion to the accuracy required, and in the case of cited meters and tubes, require full section flow (no free water and minimum entrained gases). Because of the volumes and consequent costs involved and the extreme flow variability encountered, stormwater flows are usually measured by the velocity-area method (a measured depth coupled with a normal flow velocity assumption or measurement). Instruments/operators will couple depth probes (using floats and scows, bubbler tubes, sonic or electrical devices, etc.) and known cross-sectional geometry with velocity measurements (using tracers, current meters, etc.) or approximating computations (using conduit slopes and Manning's formula, gate losses, etc.). It should be noted that simple depth measurements are highly susceptible to errors due to nonuniform and unsteady flow conditions. Typical requirements for a flow measurement

device include: (1) It must be capable of functioning with satisfactory accuracy under all flow conditions; (2) Interference with pipeline hydraulics must be kept at a minimum; (3) It must neither influence nor be influenced by any contaminants in the liquid; (4) The number of moving parts must be kept at a minimum for easy maintenance; (5) It must be capable of being instrumented for remote readout; (6) It must be resistant to theft and vandalism; (7) Its costs should be reasonable; and, (7) Its power requirements should be kept at a minimum. Once the device is installed maintenance and recalibration must be carefully attended to. (57)

Any effort made by a municipality to know its combined sewer system should include a physical survey or field investigation as one of the tasks. Field investigations will augment and verify the data on the sewer system obtained from maps, sampling programs, flow measurement records, and actual experiences and observations reported by interviews. A field investigation should obtain additional information on the physical condition of and flow characteristics in the municipality's sewer system, such as the location of manholes; the number, function, and location of combined sewer overflows; flow conditions at key points in the sewer system under varying conditions; and, measurement of key physical features and settings to enable a municipality to conduct future analysis of flowrates possible with and without surcharging. (44)

Finally, it is important to establish the existing sewer system mode of operation so that reasonable decisions can be made as to what approaches can be used to optimize the operation of the system. It will provide the basis for estimating reductions of the overflows after the new control strategies or abatement technologies are in place.

CHAPTER 3 - ADMINISTRATIVE ASPECTS

The administration of any wastewater treatment system is based on the agreements, permits, and legislative enactments which govern the use of, the revenue generated from the use of, and the ultimate discharge from the system. In order to control or reduce overflows from combined sewers, the administration of the system should have the goals of either exclusion of excess flow from the system or the allocation of costs in such a way that the contributors of unwanted constituents are charged a use fee consistent with their estimated contribution. Not only is a wastewater treatment plant which treats combined sewage frequently overloaded hydraulically during a storm event due to the stormwater contribution, but the biological treatment system is stressed by dilution, sometimes to the point of nearly complete breakdown and washout to the receiving stream.

Inasmuch as property owners in an area served by combined sewers receive benefits from stormwater drainage similar to users served by separate storm sewers, which are generally paid for by some form of property tax, there is a logical basis for a charge in some form (property tax, surcharge, etc.) for the drainage service provided in addition to the use fee for the sanitary waste flows contributed. Contrarily, there may be a logical basis for reducing the tax or surcharge for property served by combined sewers where retention devices have been constructed or in some way unwanted storm water is prevented from reaching the combined sewer system.

An obvious method of reducing the quantity of combined sewer overflow during storm events is to prevent or delay stormwater or other discharges from entering the combined sewer system. This method may be facilitated by: the outright prohibition of certain types of discharges; retention of other types of discharges during times of hydraulic stress or; in the alternative, charging the owner of the discharge source a realistic fee for the transportation and treatment of its discharge so that the economics will demonstrate that it is cost effective to reduce or eliminate the discharge to the combined sewer system.

The administrative mechanisms for controlling combined sewer overflow are:

1. NPDES Permit Conditions:

   NPDES permit conditions will be used by regional permitting agencies to require improved combined sewer system management in order to minimize overflows. These permit conditions will be included when NPDES permits are reissued/modified beginning in FY 1987 and continuing thereafter. An operational plan will be one of the requirements specified. The municipality must ensure that their development of an operational plan takes into consideration and addresses the other requirements in their NPDES permit.

2. Sewer Use Ordinances:

A sewer use ordinance restricts certain connections and wastes from a municipality's sewer system in order to protect its treatment system. These legally enacted ordinances may also be used to control or reduce overflows from combined sewers. This can be achieved by including provisions to require the minimization or delay of any new contributions to the combined sewer system. The permittee/owner of the treatment works may wish to consider the following:

(a) Removal of existing direct stormwater connections which can be easily detected and inexpensively removed i.e., downspouts, etc. This could be effective in reducing peak storm event flows or at least facilitating the ability to capture more of the first flush;

(b) Surcharging the owners of property for transporting and treating intentionally introduced stormwater in addition to the sanitary sewage discharged from the property;

(c) A method of taxing or surcharging owners of property without direct connection to the combined sewers where it can be demonstrated that the property benefits from the stormwater drainage of the sewer system;

(d) Control of the introduction of non-polluted water from industries to the combined sewer system, i.e., cooling water, refrigeration condensate, other non-process waters, etc.;

(e) A method of encouraging property owners to construct retention basins or other methods of preventing or slowing entry of stormwater to the system, i.e., tax or surcharge reduction;

(f) Allocation of increased costs of treatment, caused by dilution due to the stormwater component in the system;

(g) Where practical, i.e., large industries or residential complexes where area drains are connected directly to the combined sewers, the installation of sewage meters at the discharge point and charging for water delivered to the sewers rather than for potable water metered to the property.

3. Intermunicipal Agreements:

Intermunicipal Agreements are those documents which define the terms and conditions governing the relationship between two or more municipalities where one party accepts and treats wastewater on behalf of the other parties to the agreement. The agreements should embody a fair allocation of the NPDES Permit constraints on the permitee to all of the contributing municipalities and provide for assurance that

all parties to the agreements will enact and enforce legislation (i.e., use ordinances, rate ordinances, etc.) consistent with the agreements and permits. In the case of combined sewers, it is critical that all parties to the agreement understand how the systems will operate during storm events. It is particularly critical where the upstream municipality has combined sewers and discharges to a downstream municipality with separate sewers, as the utilization of storage capacity in the intercepting sewers, to mitigate or eliminate combined sewer overflow, could create an overflow or backup problem in the separate system.

Failure of members of a Regional sewer system to agree or parties to an agreement to act in accordance with the terms of an agreement could result in enforcement action against the permittee who, in turn, could litigate against the offending parties to seek equity within the Region or between the parties. Also, where water pollution problems are severe and documented, the offending parties could be made defendants in the enforcement action.

4. Industrial or Subdivision/Sub-Area Flows:

There is no requirement that a publicly owned treatment works (POTW) must accept any non-domestic wastewater contributions from any industry. However, it is desirable, and has long been encouraged that where industrial wastewater is amenable to treatment in a POTW that the municipality treat the industrial wastewater. Where the industrial wastewater contains components which interfere with the treatment of domestic wastewater or are untreatable with normal domestic wastewater treatment processes, the industry must pre-treat its wastewater to achieve compatibility prior to discharge. Municipalities have the right to measure, monitor, and control the flow of wastewater from its industries by the utilization of sewage meters, discharge weirs, flow control devices, etc., for the purpose of properly allocating the cost of transportation and treatment to the contributing industries. In cases where industries generate large quantities of "Non-polluted" cooling water, condensate, or other types of non-process water, it is desirable that the industry retain or dispose of that type of water by means other than discharge to a sanitary or combined sewer system. It is also desirable that the industries be required to eliminate all area, building, and other stormwater drain connections from their discharge to a combined sewer system.

When a municipality with a combined sewer system serves industries which require pre-treatment of wastes, it may be reasonable to investigate including enough storage capacity with the pre-treatment facilities so that discharge to the combined sewer system during storm events may be slowed or eliminated to provide additional in-system storage for stormwater which cannot be eliminated from the

system. Subdivisions and sub-area flows to the combined system can be controlled at the point of entry to the intercepting sewer to fully utilize any storage capacity which may exist in the sub-system. This is true even for those subdivisions and sub-areas which are served by separate sanitary sewers.

5. Analysis Requirement When Approaching System Capacity:

   When the overall system or any major subsystem approaches capacity, the municipality must analyze alternative means to either reduce flows or increase capacity. The implementation of the selected action must be done in a timely manner.

6. The Combined Sewer Operational Plan:

   The combined sewer operational plan defines the operation of the combined sewers system. It is the culmination of and incorporates all or part of the other administrative devices for control of combined sewer overflow.

CHAPTER 4 - SOURCE CONTROLS

One possible way of controlling pollution from combined sewer overflows is to reduce the amount of contaminants in the storm water. This can be done with source controls, which remove pollutants from the stormwater flow path. In addition to any source control programs developed by the municipality, industries which are potentially sources of high pollutant loadings in stormwater runoffs could be required to perform their own source controls. Industries could be required to address such issues as, bulk loading area spills, contaminated non-process waters, and other site-specific runoff problems that are present. Examples of source controls that can be used by municipalities and/or industries include street cleaning, catchbasin cleaning, and sewer flushing.

STREET CLEANING

Street cleaning, to remove debris, dirt, and dust, can be used to reduce the source of stormwater related pollutants. A majority of the street contaminants are related to geological conditions and motor vehicle use. Most street surface particles result from soil or asphalt erosion. Nitrogen and phosphorus are carried from the soil by the wind and traffic. The contaminants from automobiles, while their overall percentage is small, are important because of their toxicity. These auto pollutants arise from emissions, leaking fluid, and wear of mechanical parts.

Street cleaning can be accomplished by mechanical broom sweepers, vacuum sweepers, manual sweeping, and street flushing. (61) Mechanical broom and vacuum sweepers loosen dirt from the street surface and collect it in a temporary hopper. Manual sweeping can be used in areas that machines cannot reach, e.g., near parked cars. The last method, street flushing, does not remove the pollutants but merely transports them from the streets to the sewers. For street flushing to be effective in reducing pollutants in stormwater overflows, it should be used in conjunction with sewer flushing. This way the flushings can reach the treatment plant and be treated along with the dry weather flows.

The overall results of street cleaning are highly variable. The effectiveness is dependent upon such site specific variables as pavement type and condition, pollutant loading, size distribution of particles, equipment type, and cleaning frequency. Before a comprehensive street cleaning program can be developed, the city's objectives and operating conditions must be defined. Emphasis should be given to areas with high organic loadings, e.g., areas near industrial or processing plants from which high concentrations of pollutants originate. Accumulation rates and allowable residual loadings should be determined for each area with differing conditions. Based on these specifications, cleaning efficiency and frequency may be determined. In some cases, a general city-wide cleaning may be necessary. In other cases, a cleaning program which targets high loading areas may be sufficient.

CATCHBASIN CLEANING

A catchbasin is a chamber or well which accepts street surface water and discharges into a sewer. (36) The catchbasin has a sediment sump at its base which traps some of the coarse debris and grit from the surface water. This minimizes sewer clogging and reduces the amount of pollutants which may enter and eventually settle out in the sewers. Cleaning of these catchbasins prevents accumulaton of sediment which can become resuspended and enter the sewer with the basin overflow. A cleaning program should emphasize regular maintenance of the catchbasin. Cleaning should not be neglected until clogging occurs because prior to this event, some of the sediment will be washed into the sewer. The cleaning program should also target high load areas for more frequent cleaning.

SEWER FLUSHING

The dry weather deposition of solids in sewers is a major cause of the "first-flush" phenomenon. The average dry weather flow velocities are inadequate to keep solids suspended, especially where sewer grades are flat. Up to 30% of the total collected solids may be deposited in combined sewers. Periodic sewer flushing can remove and transport this material to the treatment plant before a storm event washes it into a receiving stream via an overflow. Sewer flushing also maximizes the hydraulic capacity of the sewer for wet weather flows.

Field testing in Boston has shown that pollutant removals are a function of pipe lengths flushed. For single manhole to manhole segments, removal of 75 to 90% for organics and 75% for grit and inorganics can be achieved. This testing used average flush volumes of 300 gallons in small diameter (12-15 inches) combined sewer laterals. (24)

There are different methods to flush sewers. Fresh water may flow from a manhole, by gravity or under pressure, to scour the sewers. Sewage may also be used to resuspend the deposited solids. This is done by backing up the upstream flow with quick release by either manual or automatic means. These methods have roughly the same removal efficiencies.

Development of a sewer flushing program requires an estimate of deposition loadings. Based on information gathered from the field tests in Boston, predictive equations have been regressed, relating solids loading to sewer system characteristics. The simplest model developed is presented in Table 2. Also required for the development of a flushing program is a detailed knowledge of the entire sewer system. Flushing effectiveness depends on such variables as flush volume and rate, with the volume being limited by the downstream interceptor capacities. Program emphasis should be placed on upstream networks where flushing can be used to transport solids to trunk sewers or interceptors with higher dry weather flows capable of keeping the solids suspended. This way, more effective use can be made of the flush volume.

TABLE 2. PARTIAL SUMMARY OF PREDICTIVE PROCEDURES FOR ESTIMATING DAILY DRY WEATHER SEWAGE COLLECTION SYSTEM DEPOSITION LOADINGS

A. DAILY DEPOSITION LOADS

$$TS = 0.076\ L^{1.063}\ (\bar{S})^{-0.4375}\ q^{-.51}\quad (R^2 = 0.845)$$

WHERE TS = COLLECTION SYSTEM SOLIDS DEPOSITION LOADINGS (LBS/DAY),

L = TOTAL LENGTH OF COLLECTION SYSTEM PIPING (FT),

$\bar{S}$ = AVERAGE COLLECTION SYSTEM PIPE SLOPE (FT/FT) AND,

q = DAILY PER CAPITA WASTE DISCHARGE RATE (GPCD).

B. PIPE LENGTH AND SERVICE AREA

1) $L = 168.95\ A^{0.928}$

2) $L = 239.41\ A^{0.928}$ $(R^2 = 0.821)$

WHERE L = COLLECTION SYSTEM PIPE LENGTH (FT) AND

A = SERVICE AREA (ACRES).

AND 1 = LOW POPULATION DENSITY (10-20 PEOPLE/ACRE)

2 = MODERATE/HIGH POPULATION DENSITY (30-60 PEOPLE/ACRE)

C. AVERAGE PIPE SLOPE AND GROUND SLOPE

$$\bar{S} = 0.348\ (\bar{S}_G)^{0.818}\quad (R^2 = 0.96)$$

WHERE $\bar{S}$ = AVERAGE COLLECTION SYSTEM PIPE SLOPE AND

$\bar{S}_G$ = AVERAGE GROUND SLOPE.

SOURCE: REFERENCE (62)

CHAPTER 5 - SEWER SYSTEM CONTROLS

REGULATORS

The proper operation of regulator devices is very important in controlling combined sewer overflows. Regulators control the distribution of flow from the combined sewers between the interceptors and the outfalls. During dry weather, all of the flow should be diverted to the interceptors. During wet weather, the regulators should divert the maximum flow to the interceptors without exceeding interceptor or treatment plant capacity. The excess flow should be backed up in the combined sewers. Only after maximum use of the combined sewer storage capacity is achieved, should wet weather flow be discharged to the receiving water. This requires careful operation and maintenance of the regulator devices.

CONVENTIONAL DESIGNS

Conventional regulators are subdivided into three groups: static, semi-automatic, and automatic.

STATIC REGULATORS

Static regulators are rather limited in the adjustments that can be made to vary the flow distribution. There are few or no moving parts in most types of static regulators. Because control is minimal, the effectiveness of operation is dependent upon regular inspection and maintenance. Static regulators include; manually operated gates, fixed orifices, leaping weirs, side-spill weirs, and internal self-priming siphons. (16)

Manually Operated Gates

Manually operated gates are typically used for diverting wet weather flows of less than 4 cfs since use of dynamic regulators for such small flows is not economical. A manually operated gate regulator is shown in Figure (2). This regulator consists of a diversion chamber, an orifice chamber, and, if needed, a tide gate chamber. The diversion chamber contains an overflow dam across the combined sewer channel, which diverts flow to the orifice chamber. Excess flow passes over the dam into the tide gate chamber, which prevents backflow from the receiving waters. Between the diversion and orifice chambers is a manually operated vertical gate on a vertical orifice. The manual adjustment of this gate regulates the amount of flow entering the orifice chamber. The opening should be set to allow the maximum wet weather flow into the interceptor while maintaining subcritical levels in the interceptor and at the treatment plant. This flow is conveyed from the orifice chamber by a branch interceptor to the main interceptor.

OPERATIONAL PLAN CONSIDERATIONS: The overflow dam should be set at a level which backs up flow into the combined sewers when the interceptor capacity is reached without causing basement backups. The use of the combined sewer storage capacity will reduce the amount of sewage that is overflowed.

The regulator gate should be inspected for any debris which may prevent its operation. Preventive maintenance should include moving the gate through the complete range of positions before resettling at the proper position.

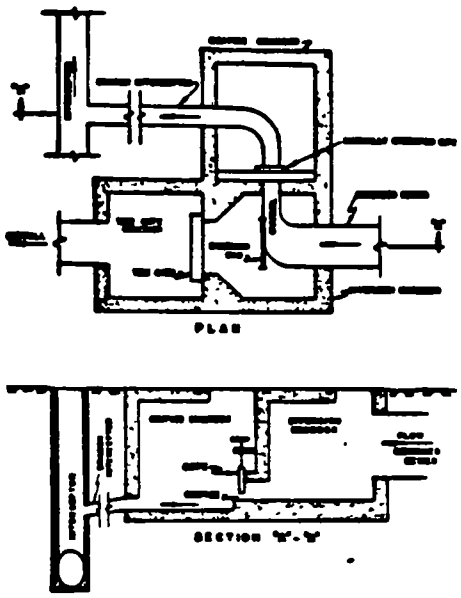

TYPICAL LAYOUT
MANUALLY OPERATED GATE

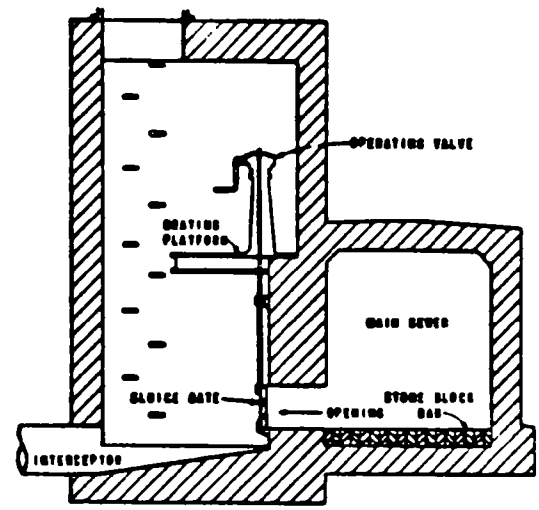

TYPICAL MANUALLY OPERATED GATE REGULATOR

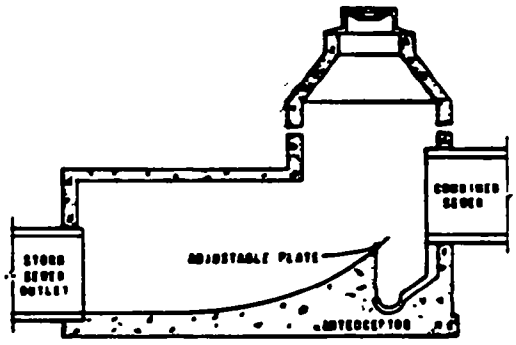

ADJUSTABLE LEAPING WEIR AT SEATTLE, WASH

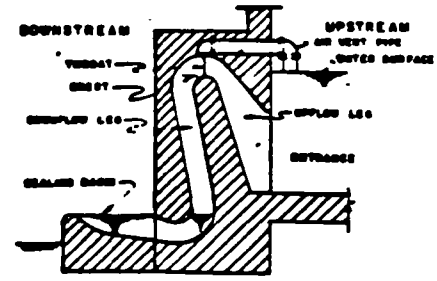

INTERNAL SELF-PRIMING SIPHON

FIGURE (2): Typical Static Regulators

SOURCE: REFERENCE (16)

and (57)

Fixed Orifices

These regulators are used for diverting wet weather flows of less than 2 cfs. The two types of fixed orifice regulators are vertical and horizontal.

The vertical orifice is similar to the manually operated gate regulator, except that the wall between the diversion and orifice chambers contains a fixed opening instead of a gate.

OPERATIONAL PLAN CONSIDERATIONS: Preventive maintenance for the vertical orifice should include inspection and cleaning of debris, as clogging is a frequent problem.

The horizontal orifice can be constructed either in the bottom of the combined sewer or in a separate chamber. In both cases, the orifice leads to the branch interceptor which conveys sewage to the main interceptor. When constructed in the bottom of the combined sewer, a metal grating is usually placed over the opening to prevent entrance of large objects. A dam is necessary downstream of the orifice to prevent overflows during dry weather. When the orifice is constructed in a separate chamber, the device is similar to the manually operated gate regulator. The only differences are the horizontal orifice is in the bottom of the orifice chamber and the opening in the wall between the diversion and orifice chambers is large enough so it does not control flow during dry weather.

OPERATIONAL PLAN CONSIDERATIONS: Control of flow in both types of horizontal orifices may be adjusted by changing the size of the opening with replaceable plates. The flow through the orifice should be sufficient to maximize the interceptor and treatment capacities during wet weather. The dam should be set to maximize the use of combined sewer storage capacity to hold excess flows before overflowing to the receiving waters. Maintenance is difficult when grates are used, as clogging frequently occurs even with daily cleaning (16). If clogging becomes too much of a problem, larger grate openings should be tried.

Leaping Weirs

The leaping weir consists of an opening in the bottom of the sewer through which the dry weather flow drops into a branch interceptor and is conveyed to the main interceptor. A leaping weir is shown in Figure (2). Leaping weirs are used for intercepting low flows. The opening can be varied by adjusting a weir, which controls the amount of flow going to the interceptor. During wet weather, the higher flow velocities and volume carry most of the combined sewage and stormwater over the opening and to the outfall pipe.

OPERATIONAL PLAN CONSIDERATIONS: Since the regulator opening size is the only means of control, it is necessary to set the opening so that the maximum capacities of the interceptor and treatment plant are used during wet weather. Also, all of the dry weather flow should be captured with a large enough opening, as there is no dam to hold back the flow. Preventive maintenance should include cleaning of the regulator to prevent clogging. Also, the weir should be lubricated and adjusted to prevent sticking.

Side-Spill Weirs

The side-spill weir is constructed parallel to the combined sewer axis to divert flow from the interceptor. Excess flow passes over the sidespill weir into the outfall sewer. The weir should be set to hold back peak dry weather flow, as well as to maximize the use of interceptor capacity during wet weather. This regulator may be used for any volume of flow. However, the length of the weir is proportional to the volume of overflow. Thus, side-spill weirs are typically used for low flows. Studies have shown that the side-spill weirs poorly control overflow. Overflows occurred prematurely, allowing less flow to the interceptor than theoretically calculated values.

OPERATIONAL PLAN CONSIDERATIONS: Preventive maintenance of side-spill weirs includes inspection of the weir for damage and corrosion.

Internal Self-Priming Siphons

Internal self-priming siphons are used to divert flows of greater than 5 cfs to the receiving waters. An internal self-priming siphon is shown in Figure (2). The water level rises in the upflow leg of the siphon until it reaches the crest. When the water flows over the crest, it strikes the downflow leg which is designed at an adverse angle, sealing the siphon. As the water continues of to rise, the air is forced out of the siphon, thus priming it. The fall of the water in the downflow leg creates a vacuum which causes the flow of water through the siphon to the receiving water. This continues until the upstream water level drops low enough to allow air into the upflow leg, breaking the vacuum.

OPERATIONAL PLAN CONSIDERATIONS: Maintenance on the siphon should include the removal of accumulated debris from the entrance to prevent clogging.

SEMI-AUTOMATIC REGULATORS

Semi-automatic regulators can be adjusted over a limited range to vary the distribution of flow. There are moving parts in these regulators but they are not suitable for remote control. Because of the increased complexity of these regulators, effective operation depends on regular adjustments as well as frequent inspection and maintenance. Semi-automatic regulators include float operated gates, tipping gates, and cylindrical gates. (16)

Float Operated Gates

Float operated gates are generally used for diverted flows greater than 4 cfs. A typical layout is shown in Figure (3). The regulator consists of a diversion chamber, a regulator chamber, and, if needed, a tide gate chamber. An overflow dam in the diversion chamber diverts flow into the regulator chamber. Excess flow passes over the dam, through the tide gate chamber, which prevents backflows from the receiving water, and into the overflow pipe. Between the diversion and regulator chambers is a regulatory gate which controls the

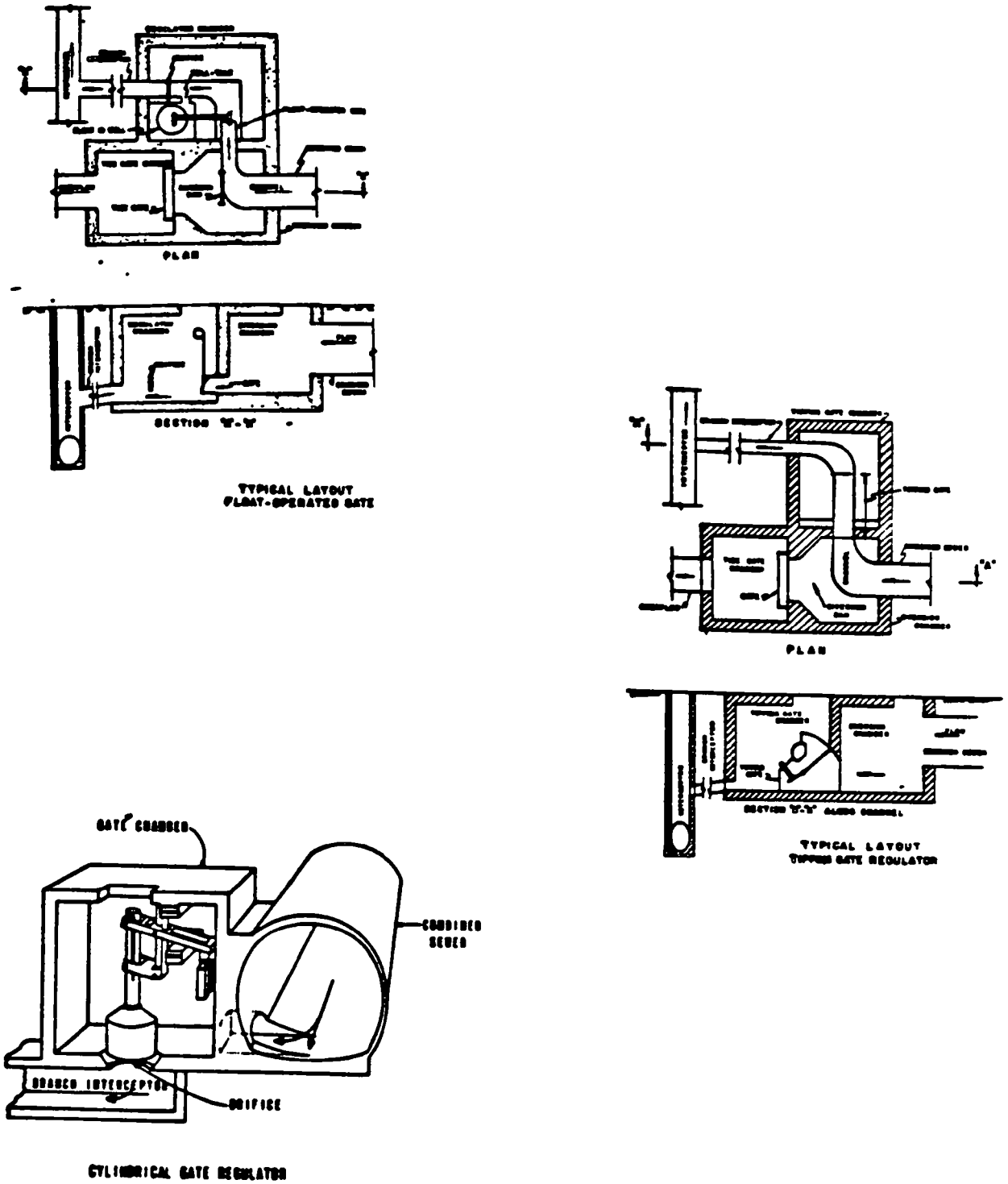

FIGURE (3): Typical Semi-Automatic Regulators

SOURCE: REFERENCE (16)

and (57)

amount of sewage entering the regulator chamber and thereby entering the main interceptor via the branch interceptor. This gate is linked to a float in a floatwell which may either be connected to the combined sewer or the interceptor flow channel. When connected to the combined sewer, the float and floatwell will activite the gate to adjust diverted flows depending on the level of water in the combined sewer. When connected to the interceptor flow channel, the float assembly activates the gate depending on the water level in the interceptor.

OPERATIONAL PLAN CONSIDERATIONS: The regulating gate should be set so that the diverted flow during wet weather will optimize the use of the interceptor and treatment plant capacities. The overflow dam should be set so that excess flows are backed up to make use of the combined sewer storage capacity before overflowing to the receiving waters. Preventive maintenance should be performed regularly since the operation of the float system is delicate. Maintenance should include cleaning debris from the floatwell and inspection and lubrication of moving parts.

Tipping Gates

The tipping gate regulator can be used to divert a wide range of flows. This regulator is similar to that of the manually operated gate described in the static regulator section. A typical tipping gate regulator is shown in Figure (3). The only difference between the two gate regulators is the type of gate used. The tipping gate between the diversion and orifice chambers is a metal plate with a pivot below its center of gravity. The gate is mounted so the flow must travel under the gate to reach the branch interceptor. During dry weather the flow is low enough to go under the gate. During wet weather, the flow velocity increases and the water level rises putting pressure on the upper portion of the gate, i.e. above the pivot. This causes the gate to turn about the pivot and partially close the opening.

OPERATIONAL PLAN CONSIDERATIONS: This tipping gate should be set to allow all of the dry weather flow, as well as the maximum amount of wet weather flow through to the interceptor. As in the case of the manually operated gate, the overflow dam in this regulator should be set to maximize use of combined sewer storage capacity before overflowing. Preventive maintenance should include lubrication of the tipping gate pivot.

Cylindrical Gates

A cylindrical gate regulator consists of a horizontal orifice in a chamber beside the combined sewer. Flow is diverted by a dam through an opening in the side of the sewer into the gate chamber as shown in Figure (3). The sewage then drops through the horizontal orifice into the branch interceptor which conveys the flow to the main interceptor. The closing of the orifice is controlled by a cylindrical gate hung over the opening and balanced by a counterweight. The gate may be controlled by the sewage level in either the branch interceptor or the combined sewer. When controlled by the interceptor level, an air-vent tube is positioned between the interceptor and gate chamber. When the sewage level reaches a certain height, a vacuum is formed in the cylinder gate by entrainment of the air. Atmospheric pressure forces the

gate down over the orifice. When controlled by the level of sewage in the combined sewer, the rising sewage level entering the gate chamber puts a greater pressure on the conical section of the gate than can be offset by the counterweight. Thus, the gate is forced to close when the sewage level reaches a certain height.

OPERATIONAL PLAN CONSIDERATIONS: The setting of either the air-vent tube or the counterweight should be carefully done to allow maximum flow into the interceptor without exceeding capacity.

AUTOMATIC REGULATORS

Automatic regulators are fully adjustable and can be easily adapted to remote control. Proper operation involves careful setting of the regulators. Because automatic regulators are sophisticated units, special emphasis should be placed on inspections to prevent failure. Automatic regulators include cylinder and motor operated gates. (16)

Cylinder-Operated Gates

Cylinder operated gates are used for flows of greater than 4 cfs. A cylinder operated gate regulator is shown in Figure (4). This regulator consists of a diversion chamber, a regulator chamber, an equipment chamber, when electrical equipment is needed in the operation of the cylinder, and, if necessary, a tide gate chamber. The diversion chamber contains a dam to divert flow to the regulator chamber. Between the diversion and regulator chambers is a cylinder operated sluice gate which controls the amount of flow entering the interceptor. The cylinder is governed by a level sensor, a float or bubble tube in a well. The well can be linked to either the combined sewer or the interceptor. During dry weather, the sluice gate allows all the flow into the interceptor. During wet weather, rising sewage levels in the combined sewer or the interceptor cause the well level to rise. This either raises the float or increases the pressure in the bubble tube. When a certain level is reached in the controlling sewer, the cylinder, operated by water, air, or oil pressure, partially closes the sluice gate.

OPERATIONAL PLAN CONSIDERATIONS: The hydraulics of the regulator should be adjusted so the maximum capacity of the main interceptor and the treatment plant are used before the sluice gate restricts flow. Also, the overflow dam should be set to back flows up to use the storage capacity of the combined sewers before overflowing. Preventive maintenance should include clearing debris from the well, and careful inspection of the hydraulic or pneumatic cylinder and sewage level sensing equipment.

Motor-Operated Gates

This regulator is similar to the cylinder operated gate except that the gate is driven by a motor rather than a cylinder.

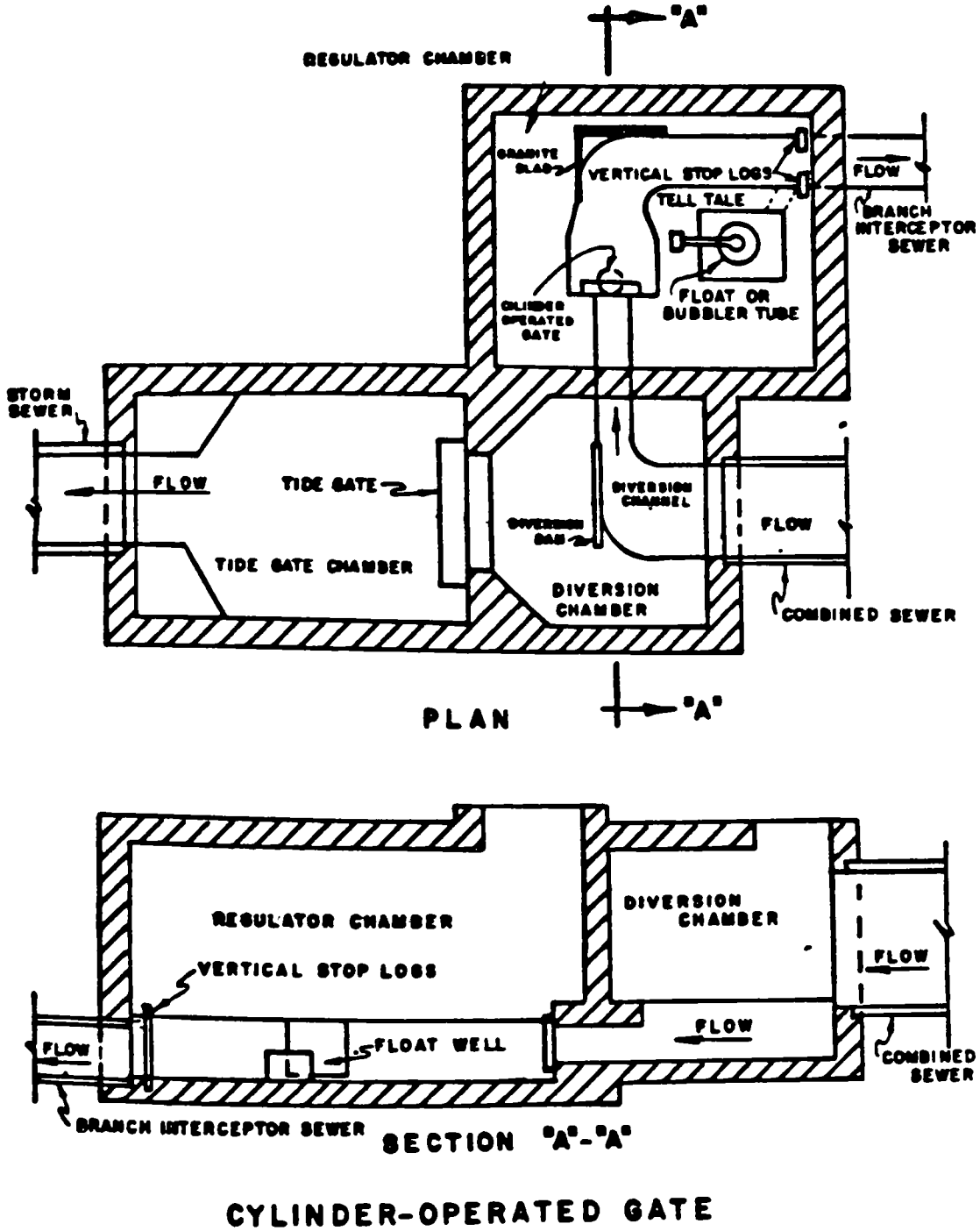

FIGURE (4): Typical Automatic Regulators

SOURCE: REFERENCE (16)

IMPROVED REGULATOR DESIGNS

Recent emphasis has resulted in the development of several new and improved regulators in the United States. (16), (26), (29)

Fluidic Regulators

A fluidic regulator consists of a weir, a control port, an air slot, a simple level sensor, a communication line, and an elevated exit weir and dry weather flow entry point. The combined sewer splits into a branch interceptor sewer which conveys the flow to the treatment facility and a storm sewer where excess flow is conveyed to the receiving waters. During dry weather periods, a low dam in the storm sewer diverts all of the flow to the branch interceptor sewer and then to the wastewater treatment facility. In wet weather periods, the flow is regulated by the amount of air pressure or vacuum supplied. This pressure or vacuum is self-induced by the flow in the sewer by use of pneumatic devices. Any flow in excess of design is passed over the unit into the overflow channel. Figure (5) represents the schematic drawing of a fluidic regulator.

OPERATIONAL PLAN CONSIDERATIONS: This regulator requires periodic inspections to make certain that control system components are not clogged. The control system piping should be checked for air leaks at the joints and seals. Occasional flushing of sediment and accumulated solids may be necessary after long periods of dry weather flow.

Vortex Regulators

Vortex flow regulating devices replace weirs and float-controlled flow regulators presently being used in sewer systems. They consist of a circular channel in which rotary motion of the sewage is induced by the kinetic energy of the sewage entering the tank. Flow to the wastewater treatment facility is diverted and discharges through a pipe at the bottom and near the center of the devices. During wet weather periods, excess flow discharges over a circular weir around the center of the tank and is conveyed to the receiving waters. The rotary motion causes the sewage to follow a long path through the channel resulting in secondary flow patterns. These patterns in turn create an interface between the fluid sludge mass and the clear liquid. The flow containing concentrated solids is directed to the intercepting sewer. An example of a vortex regulator known as a hydrobrake regulator has a conical shape, resembling a space capsule and requires no electrical power but uses a static head of stored water to create its own energy to retard flow. Figures (6) and (7) displays the drawing of a vortex regulator, and illustrates how a hydrobrake regulator operates respectively.

OPERATIONAL PLAN CONSIDERATIONS: Floatables and deposited solids in the intercepting sewer should be flushed in order to prevent their accumulation. Periodic checks are required for prevention of clogging.

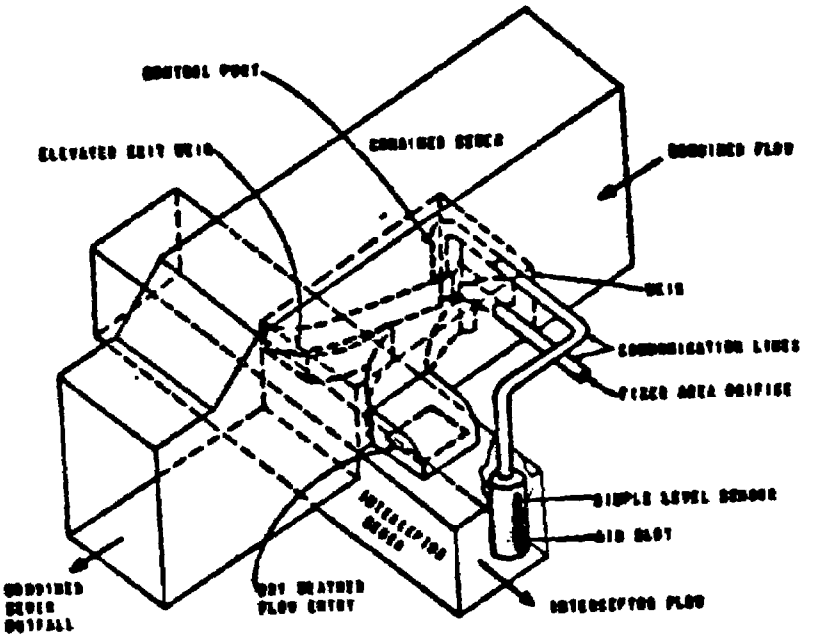

FIGURE (5): **Schematic arrangement of a fluidic sewer regulator.** SOURCE: REFERENCE (57)

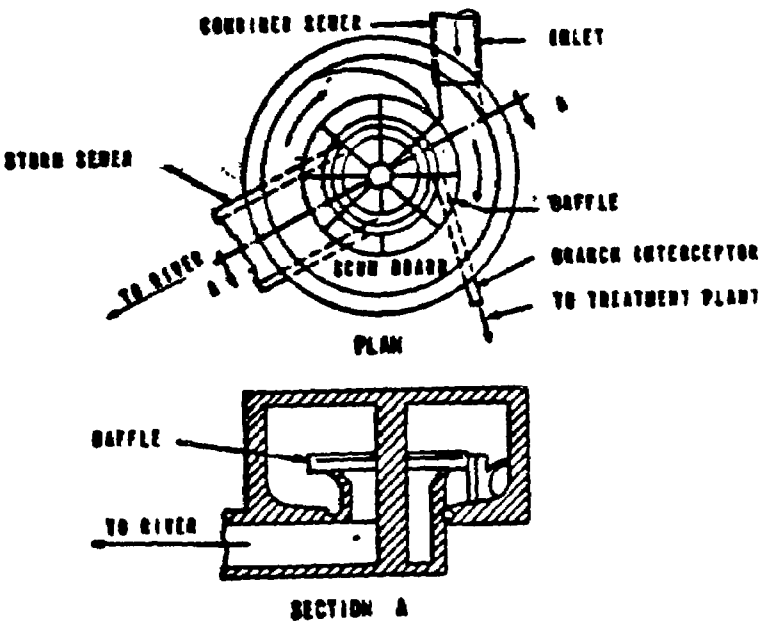

FIGURE (6): **Vortex regulator**

SOURCE: REFERENCE (57)

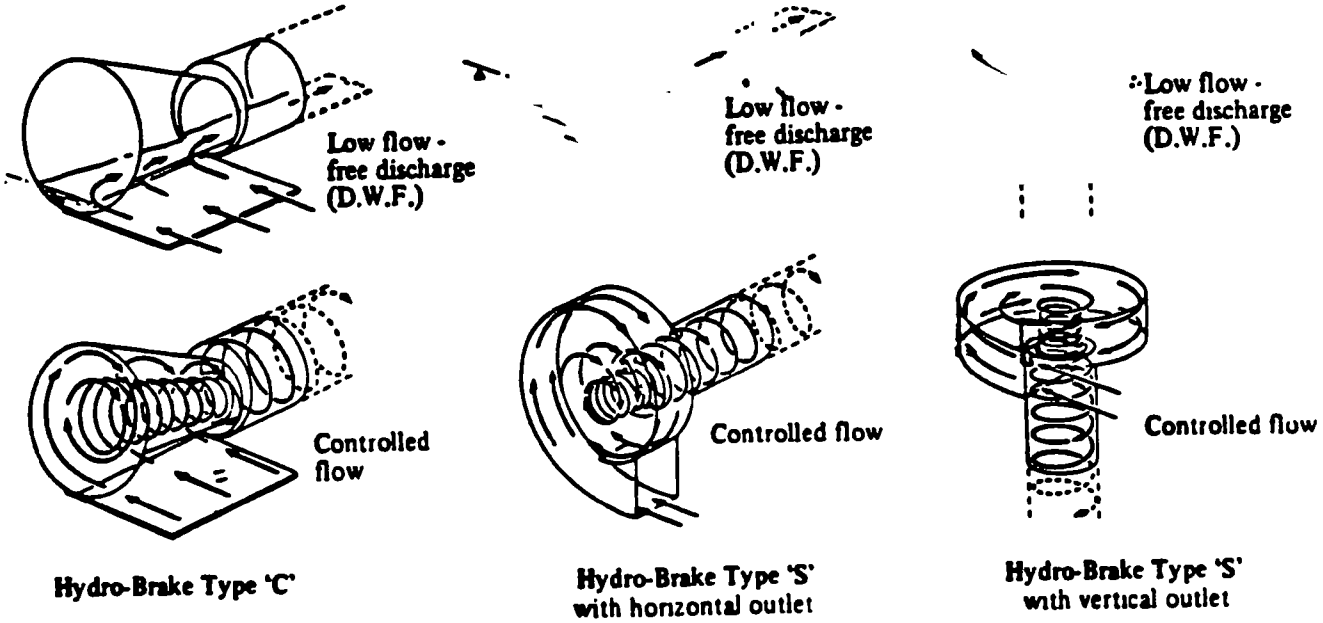

FIGURE (7):

EXAMPLES OF HYDROBRAKE FLOW REGULATORS

SOURCE: REFERENCE 26

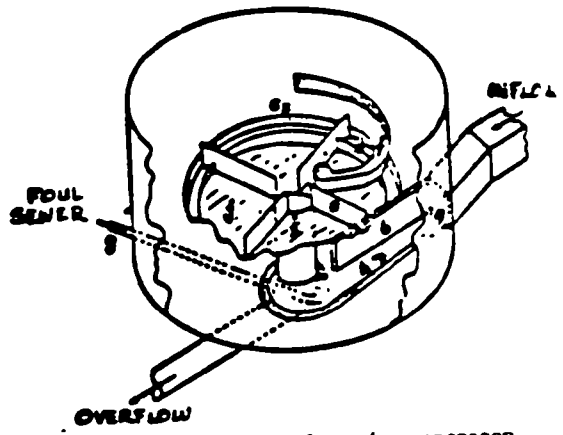

FIGURE (8): Isometric view of swirl regulator/concentrator

Legend:
a - Inlet Ramp
b - Flow Deflector
c - Scum Ring
d - Overflow Weir
e - Spoilers
f - Floatables Trap
g - Foul Sewer Outlet
h - Floor Gutters
i - Downshaft
j - Overflow Weir Plate

SOURCE: REFERENCE (22)

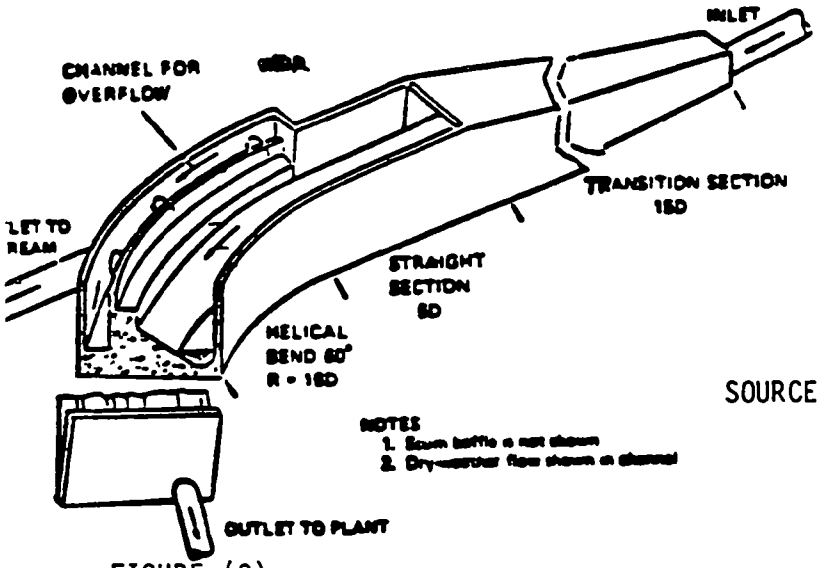

SOURCE: REFERENCE (22)

FIGURE (9):

Isometric view of helical bend regulator

Swirl Regulators/Concentrators

The swirl regulator/concentrator is of simple annular-shaped construction and has no moving parts. It consists of an inlet ramp, a flow deflector, spoilers, a scum ring, floatable collectors, floor gutters, an overflow weir, and a foul sewer outlet. The flow is regulated by a central circular weir spillway, with solid/liquid separation occurring by way of flowpath induced inertial separation and gravity-settling. Dry weather flows are diverted through the foul sewer outlet by way of a channel location in the floor of the chamber to the wastwater treatment facility. During wet weather periods, the low volume concentrate (3 to 10 percent of the total flow) which includes sanitary wastes, stormwater runoffs, and solids concentrated by swirl action, is diverted by way of the foul sewer outlet to the intercepting sewer. The excess flow overflows the central circular weir into a downshaft for storage, treatment, or discharge to the receiving waters. See Figure (8) for illustration of an swirl concentrator.

OPERATIONAL PLAN CONSIDERATIONS: Inasmuch as there are no moving parts in this regulator, maintenance and adjustment requirements are minimal. Fine-tuning control is provided via a separate chamber with a cylindrical gate on the "foul sewer" outlet to the intercepting sewer. Remote control could be accomplished by providing a larger-than-necessary foul sewer (also diminishing the chances of clogging) and throttling this line with a remote controlled gate. In addition, the weirs need to be periodically checked to prevent clogging. Floatables and deposited solids may need to be flushed into the intercepting sewer.

Helical Bend Regulators/Concentrators

The helical bend regulator/concentrator consists of an inlet from the entrance sewer section to the device, a transition section from the inlet to the expanded straight section before the bend, an overflow side weir and scum baffle, and a foul outlet for concentrated solids removal and control of the amount of underflow going to the wastewater treatment facility. During dry weather periods, the flow goes through the lower portion of the device to the intercepting sewer and then to the treatment facility. As the level of flow increases during wet weather periods, helical motion begins and the solids are drawn to the inner wall and drop to the lower level of the channel leading to the treatment facility. When the storm subsides, the flow velocity increases due to a constricted channel, thereby preventing the accumulation of solids. The excess flow passes over the side weir and is discharged to the receiving waters. Floatables are prevented from overflowing by a scum baffle along the side weir and collect at the end of the chamber, which is then conveyed to the treatment facility as the flow level subsides. Figure (9) is an illustration of a helical bend regulator.

OPERATIONAL PLAN CONSIDERATIONS: This regulator requires periodic checks to ensure that the weirs have not become blocked or clogged. Floatables and deposited solids may need to be flushed into the intercepting sewer to prevent their accumulation.

Stilling Pond Regulators

The stilling pond regulator is a short length of a widened channel from which settled solids are discharged to the intercepting sewer. The flow to the intercepting sewer is controlled either by the use of an orifice on the outlet in the chamber or by the use of an outlet pipe designed in such a way that it will surcharge during wet weather periods. Its discharge is dependent upon the sewage level in the regulator. Excess flows during wet weather periods travel over a transverse weir and are conveyed to the receiving waters. Note that this type of regulator is considered suitable for overflows up to 30 cfs. If the stilling pond is to be successful in separating solids, it is suggested that not less than a 3-minute retention be provided at the maximum rate of flow. Figure (10) shows a possible application of this regulator.

High Side-Spill Weirs

Unsatisfactory experience with side-spill weirs has led to the development of the high side-spill weir. The weirs are made shorter in length and higher in height than would be required for the normal side-spill weir. The rate of flow to the treatment plant may be controlled by use of a throttle pipe or a mechanical gate controlled by a float. This device has the best general performance when compared to the stilling pond, the vortex, and the low side-spill weir. Figure (11) illustrates a possible application of this type of regulator.

OPERATIONAL PLAN CONSIDERATIONS: To prevent the clogging and/or blockage of the weirs, periodic checks of this regulator are required. In addition, floatables and deposited solids may need to be flushed into the intercepting sewer to prevent their accumulation.

Tide Gates

The purpose of tide gates (including backwater gates and flap gates) is to protect intercepting sewers and collector sewers from high water levels in receiving waters. When used for this purpose, tide gates are considered regulating appurtenances. The gates open and permit discharge at the outfall when the flow in the sewer system regulator chamber produces a small differential head on the upstream face of the gate.

OPERATIONAL PLAN CONSIDERATIONS: To insure proper operation of this regulator, periodic inspections are necessary. Lubrication of pivot points is a regular requirement. Hinge arms and gate openings must be checked regularly to be certain they are free of trash, timbers, or other debris that might keep the gate in a partially open position. Inspection of sealing surfaces are required to ensure positive sealing. When numerous tide gates are used, remote alarm proximity switches should be incorporated into each gate. These alarms would notify maintenance personnel of tide gate openings or malfunctioning regulators.

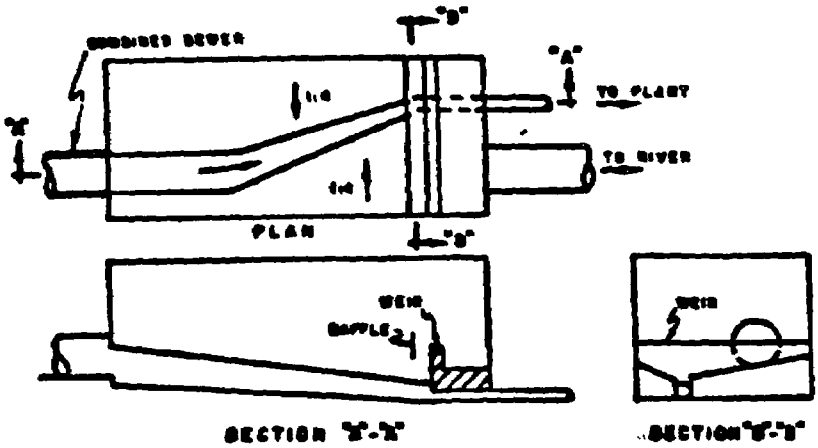

FIGURE (10)

STILLING POND REGULATOR

SOURCE: REFERENCE (16)

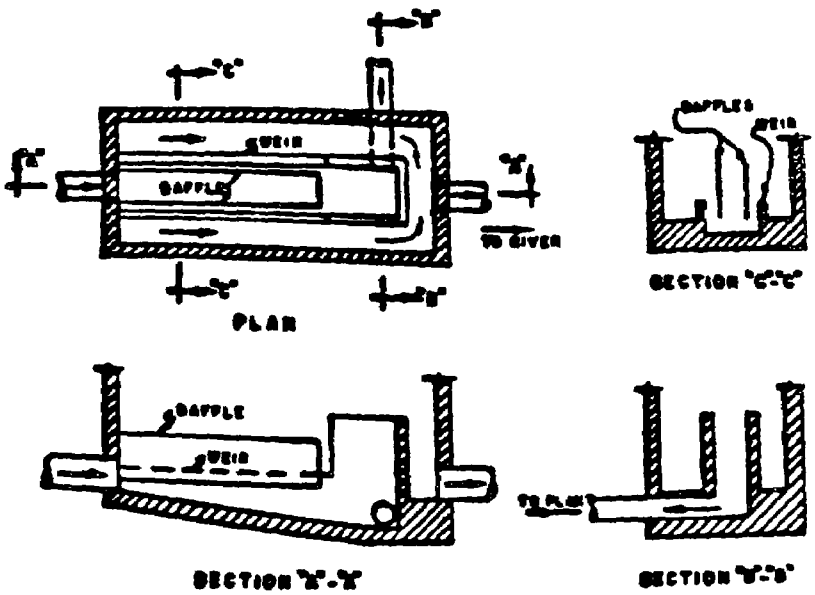

FIGURE (11) **HIGH SIDE - SPILL WEIR**

SOURCE: REFERENCE (16)

Broadcrested Inflatable Fabric Dams

The broadcrested inflatable fabric dam is a variably-controlled gating structure manufactured from reinforced rubberized fabric. This fabric is shaped into a sealed tube, and can be pressurized with either water, air, or both. The inflatable dam is installed in a deflated state and can assume the shape and contours of the foundation surfaces. Combined sewer flow is regulated and sewage or storm flow is diverted to the intercepting sewer by the operation of the inflatable dam. Overflow is regulated by simply increasing the elevation of the dam by either automatic, semi-automatic, or manually operated controls. Overflow will only be allowed to occur when the capacity of the intercepting sewer has been reached and the level of the sewage-stormwater mixture reaches the capacity of the combined sewer system. The dam does not allow clogging nor jamming during peak storm periods. It can be controlled so that a hydraulic pressure provided by the upstream water level in the sewer conduit will activate a positive deflation mechanism, allowing the excess effluent to run off. Upon the subsidence of flows and the reduction in overflow pressures, the inflation control valves open and the dam re-inflates until the designed pressure and dam height are reestablished. Crest control for inflatable dams used to regulate flows in the waterway will be based upon the relative head between the upstream water level and dam inflation pressure. The decision as to the inflation mechanism to use for the inflatable dam is dependent upon operating requirements. The best crest control can be achieved with water inflation. However, the use of air as an inflation medium results in less cost for the fabric and control equipment and in the device being fully operational during freezing winter conditions. Figure (12) represents an artist's conception of an inflatable fabric dam.

OPERATIONAL PLAN CONSIDERATIONS: These regulators are not usually subject to clogging or jamming since they can be deflated. However, even when deflated, some buildup of solids occurs upstream and requires periodic flushing. Fabric dams must be inspected regularly for punctures. The control system consisting of compressors, solenoid valves, sealed potentiometers, pressure transducers, etc. requires attention from skilled maintenance personnel.

Leaping Orifice Flow Regulating Device

The leaping orifice is a device to control the flow from the combined sewers to intercepting sewers. During dry weather conditions, the flow drops through the opening and is transported by the intercepting sewer. During wet weather periods when flows are at times in excess of the peak dry weather flow rate, the flow produces a higher head on the inlet tube, thereby giving it a higher velocity. The discharge from the inlet tube under this increased velocity will leap across the opening to the outlet tube which bypasses the flow to receiving waters. The flow which does not leap across the opening is directed to the intercepting sewer. As the flow depth in the combined sewer at the inlet tube increases so does the amount of flow that leaps across the opening and is bypassed to the receiving waters.

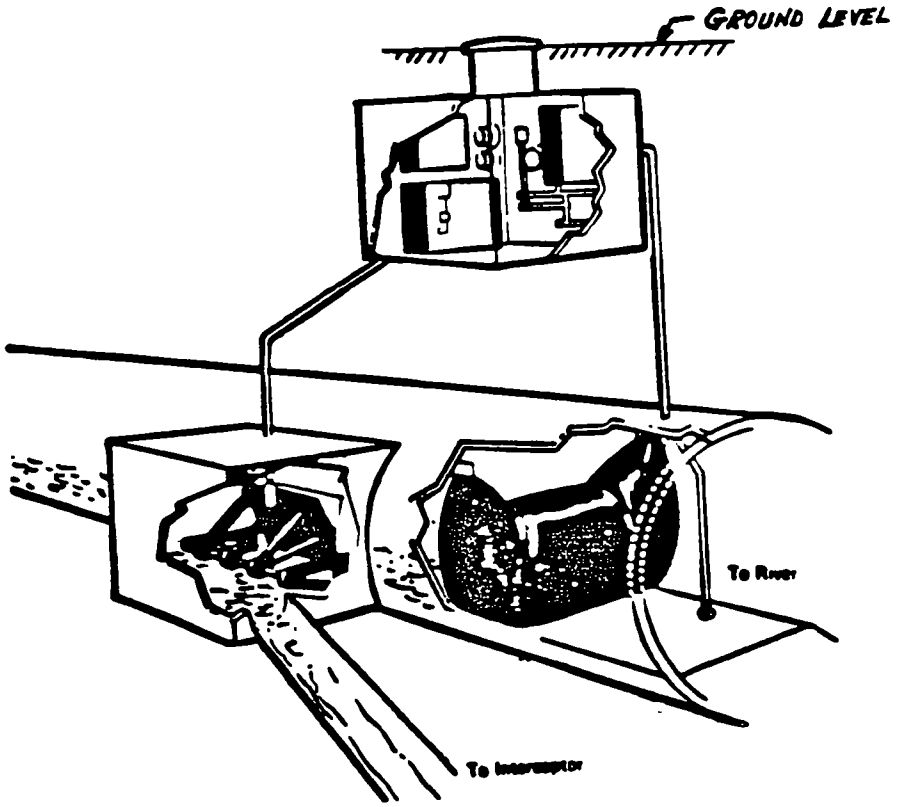

FIGURE (12): Inflatable Fabric Dam
- An Artist's Conception

SOURCE: .REFERENCE (16)

Scepter Flow Regulators

This regulator comes in two versions-insert and plate. Both types are constructed of polyvinyl chloride (PVC) which is intended to withstand corrosive effects of road deicing salt, abuse during installation and maintenance, and other adverse conditions. The insert-type scepter flow regulator is intended for insertion into standard 8-inch, 10-inch, or 12-inch pipes leading from an inlet or catchbasin. The primary application of the plate-type scepter flow regulator is in those situations where the insert type cannot be readily used, such as rough or irregular conditions at the entrance to the outlet pipe. The plate-type also facilitates ease of removal and cleaning relative to the insert-type. The orifice is diamond shaped with a rectangular keyway at the bottom. The primary purpose of this keyway is to keep buoyant debris below the bottom of the diamond during dry periods. At the onset of a runoff event, the device is expected to function such that buoyant debris jammed against the keyway will rise, encounter the wider diamond portion of the orifice, and immediately flow from the inlet or catchbasin.

CHAPTER 6 - TREATMENT PLANT OPTIONS

The reduction of combined sewer overflows can be accomplished by means of elimination of its sources, placement of controls on the sewage collection system, and treatment controls. This chapter is devoted to the discussion of the treatment plant options in reducing CSOs.

To realize the reduction of CSOs requires maximizing the capacity of the existing wastewater treatment facility. To accomplish this task, several treatment plant parameters must be evaluated. First, to assess the ability of the existing facilities to adequately handle increased hydraulic loads generated during rainstorm events, the municipality must determine the maximum hydraulic capacity of the existing treatment facility. Second, a determination of any process limitations that may exist as a result of increased loading rates must be made. It should be noted that while the overall objective is to reduce the total loading of pollutants going into the stream from the complete wastewater treatment system, Federal and State effluent standards must be met regardless of the influent flowrate. Third, the municipality should conduct an analysis of the treatment facility's performance in order to manage it more efficiently and economically during both dry and wet weather periods.

In order to integrate the dry and wet weather operation of the treatment plant, influent flow controls should not be preset so as to eliminate operational flexibility in regulating the flow through the plant. These controls should be adjusted while taking into account the sewer system's hydraulic condition. During dry weather, all of the wastewater must enter the plant and receive treatment. During wet weather, the controls should gradually throttle the flow into the plant so as to allow the maximum capacity of the plant to be utilized without upsetting any unit processes. This flexible operation of the controls is necessary because of the variability of the wastewater flow rate in the sewer system at different times during a storm event. Since the flow rate is not constant, the control setting must change in order to allow the maximum flow through to be treated.

An evaluation of the above information should enable the municipality to decide upon a flow mode of operation to maximize flow. In coming up with this mode of operation, the municipality should recognize that the increased flows through the treatment facility may decrease treatment efficiencies, but the pollutant loading is decreased through dilution, except for the period of time when a "first flush" event is occurring. This enables the quality of effluent to remain the same despite the decrease in efficiency.

One such flow mode of operation is the modification of the use of one or more treatment unit processes which will increase the flow through the treatment facility. An example of this mode of operation can be found at the Clatskanie (Oregon) wastewater treatment facility. During dry weather and other low flow conditions, the facility operates up to 0.5 MGD in a primary clarification and activated sludge mode. For higher flows, the facility can be run in a contact stabilization mode with the primary clarifier operating in a dissolved air flotation mode. These two dual use processes enable the City to increase flow through its facility by six to ten times the dry weather flow. (28)

Another possible operating mode, which can be considered if any of the treatment unit processes are severely upset as a result of the hydraulic overloading of the treatment facility, is a split-flow mode of operation. This operating mode involves the treatment of wastewaters by normal treatment unit processes up to the maximum capacity, while rerouting flows above this capacity to other unit processes. An example of this mode of operation can be found at the VanLare wastewater treatment facility in Rochester, New York. During wet weather periods, the present process capacity of 100 MGD is often exceeded, thereby resulting in upsets of certain biological unit processes. Under the split-flow mode of operation, a maximum flowrate of 100 MGD is passed through the biological unit processes for treatment, while the amount of wastewater flows exceeding this amount (100 MGD) receives full primary settling and disinfection. (7)

This mode of operation offers a number of advantages relative to wastewater treatment facility operation, namely, overall improvement in annual facility performance as well as at higher flowrates, increased savings in operating and maintenance costs, and reduction in sludge age with resultant better dewaterability. Excess flows normally should as a minimum receive primary treatment and disinfection.

CHAPTER 7 - MODELS FOR COMBINED SEWERS

INTRODUCTION

As discussed previously in this document, combined sewer overflows place an enormous pollution load on receiving waters. Pollution abatement procedures in terms of storage and treatment, collection system, and source controls were developed as a result of this problem. The complexities and costs of proposed procedures require much time and effort to be expended by local officials and others charged with decision making.

In the past, the most common methods used for analyzing and designing combined sewer systems have been based on the formula for rainfall-runoff computations and steady-state flow equations for sewer network flow analysis. In recent years, mathematical models have been developed to provide better tools for analyzing existing and planned sewer systems and system improvements, and accurately modelling flows and concentrations during stormwater runoff. These models not only provide opportunities for determining the effects of pollution abatement procedures, but also allows the testing of alternatives, thereby serving as an aid in the development of least cost solutions. The application of mathematical models has expanded rapidly. A number of factors are responsible, including recent advances in the capabilities of digital computers, improvement in user skills, increasing acknowledgement of the influence of nonpoint sources on water quality, the inability of traditional, steady-state analyses to predict water quality over time, and the increasing array of pollutants of concern as well as the complexity of the interactions of these pollutants with each other and with the environment.

Combined sewer overflow (stormwater management) models can be divided into three application categories. Planning models are used for the overall assessment of the stormwater runoff problem, as well as estimates of the effectiveness and costs of abatement procedures. These models are typified by relatively long time steps and long simulation times. Data requirements are kept at a minimum and their mathematical complexity is low. Design or event analysis models are oriented toward a detailed simulation of a single storm event and provide a complete description of flow and pollution routing from the rainfall point through the entire sewer system and often into the receiving waters. These models are used for accurate predictions and concentrations anywhere in the sewer and illustrate the detailed and exact manner in which abatement procedures or design options affect them. They are useful tools for determining least-cost abatement procedures. Design models are typified by short time steps and short simulation times. Data requirements range from moderate to very extensive depending upon the particular model employed. Operational models are used to produce actual control decisions during storm events for regulator operation (overflow control). Rainfall is entered from telemetered stations and this model is used to predict system responses a short time into the future. These models are frequently developed from sophisticated design models and applied to a particular system.

SELECTION OF MATHEMATICAL MODELS

The key criterion in the selection of a model is the problem being studied. Among the types of objectives (planning, design, operation) described in the previous section, the precision required, range of alternatives to be modeled, and time available differ greatly. Numerous cases have occurred where the model is selected and the entire study is structured around the model. It should be noted that the model is a tool to assist in conducting the study.

When considering the possibility of using models, the considerations listed below should be addressed. (1) Problem to be solved -- The problem along with the study objectives should be identified as specifically as possible in order to facilitate communication, focus of effort, and commitment. (2) The resolution required -- The resolution required is dependent upon the type of water quality problem, hydraulic characteristics, receiving waters, and spatially, the positions of points in the sewer system where the monitoring information is available and/or most beneficial. The selected model should be sensitive to yield output differences within the known ranges of given variables. (3) Complexity of problem -- If the problem is sufficiently complex to justify some kind of methodical approach, then models may be appropriate. This approach may range from specific hand calculations, through charts and nomographs, to computer models. The simplest model simulates the desired phenomena with reasonably accurate mathematical formulations and adds the benefits of total system perspective for problem identification and assessment for advanced planning. Advanced detailed models enable final design evaluations and post-construction assessments and should not be used until their need has been demonstrated by less advanced ones. (4) Availability of the calibration and verification input data -- Computer models follow operating rules set by the developer and the user furnishes the data and is left with the results. In deciding whether or not to model, the user should assess this process closely. (5) Requirement of the municipality -- its requirements and needs, including milestones, deliverables, and budget resources have a strong influence on whether and what type of models will be suitable for the job. Other factors in selecting models include the availability of suitably qualified personnel to do the work, and the availability of models that have already been calibrated and applied locally. Finally, the decision to use models warrants a careful and systematic examination of available tools (publications).

It should be kept in mind, while making model selections, that all of the models are in use and undergoing continuous change. As a result, some of the available descriptions may not be up-to-date.

APPLICATION OF MATHEMATICAL MODELS

Model application consists of three steps: calibration, verification, and analysis. The purpose of calibration and verification is to adjust the values of all the unknown or uncertain model parameters until the model predictions correspond acceptably with the observed prototype behavior. Calibration is the first phase of parameter adjustment, with the first set

of prototype input and output data, using the originally calibrated parameters. It is important that (1) the various simulation periods used for calibration and verification should correspond to significantly different prototype conditions and (2) some of them should approximate closely the conditions to be studied in the subsequent analysis. Large amounts of data including rainfall, catchment characteristics, sewer network and flow, and receiving water data may be required for calibration and verification. Generally, the most prized data represent cause-effect relationships. Upon satisfactory completion of the calibration and verification process, the model can be used for analysis. This involves running the model for various test cases for which adequate prototype output data cannot be obtained economically. All such model runs should be made bearing in mind the extent to which the simulated conditions have been extrapolated from the calibration and verification conditions. The analysis should be straightforward, unless the results indicate that unexpected conditions have been met and further assessment or calibration is needed.

The remainder of this Chapter will be devoted to brief discussions of various mathematical models.

STORM WATER MANAGEMENT MODEL - LEVEL I

The orginal USEPA Storm Water Management Model (SWMM) is a detailed model used to plan the management of urban stormwater problems. This model is generally too complex for most users. As a result, SWMM - Level I has been developed. SWMM - Level I is a desktop analysis providing a highly simplified simulation of the quantity and quality of urban runoff during a storm event. (48) The optimal control alternative may be estimated based on the associated costs. This model does not evaluate impacts of the alternative on water quality. SWMM - Level I can be broken down into the following steps:

- define the study area
- estimate the quantity and quality of urban runoff
- estimate the cost of pollution control alternatives.

In defining the study area, each urban region is divided by land use and sewer type categories. The different types of land use are residential, commercial, industrial, other developed, and undeveloped. The types of sewers are combined, storm, and unsewered. From the above division of the urban area, the population density by type of sewerage system is determined.

The demographic factors defined above are used to estimate the quantity and quality of urban runoff. Because of the sophistication of the original SWMM in predicting runoff quantities, SWMM - Level I uses the Corps of Engineers' Storage, Treatment, Overflow, and Runoff Model (STORM) for this step. The population density is used to compute the percent imperviousness. This imperviousness is in turn used to calculate a STORM runoff coefficient which when multiplied by the mean annual precipitation for the area, estimates the annual

runoff. A factor for depression storage, precipitation that doesn't cause runoff, may also be included in the annual runoff calculation. The dry weather flow is predicted based on the average per capita flow and the estimated population density. The prediction of urban runoff quality is done with an equation that predicts average annual loading rates for BOD, SS, VS, PO_4, and N as a function of land use, mean annual precipitation, population density, and street sweeping frequency. The dry weather loading is computed from an average per capita generation rate.

A generalized method, based on more detailed studies, estimates the optimal combination of storage and treatment. Data gathered from five cities from five different regions of the United States are plotted. Figure (13) shows a typical plot. The isoquant curves are different combinations of storage and treatment which achieve a given level of control. The isocost lines are storage and treatment combinations which have the same costs. The point where the isocost line is tangent to the isoquant curve represents the most economical combination of storage and treatment for the given level of control. The expansion path represents the optimum combination for any degree of treatment desired. From similar plots for the five different cities, a mathematical equation has been developed to represent the isoquant curve. (48)

$$T = T_1 + (T_2 - T_1)e^{-KS}$$

where T = wet-weather treatment rate, inches per hour,

T_1 = treatment rate at which isoquant becomes asymptotic to the ordinate, inches per hour,

T_2 = treatment rate at which isoquant intersects the abscissa, inches per hour,

S = storage volume, inches, and

K = constant, inch $^{-1}$.

The parameters T_1, $T_2 - T_1$, and K have been related to the level of control, R, in the following equations

$$T_1 = aR$$

$$T_2 - T_1 = be^{hR}$$

$$K = de^{-fR}$$

where a, b, d, f, and h are coefficients.

These equations can be used for other cities by adjusting these coefficients based on a comparison of the runoffs from the considered city and the test city in its region. By combining the treatment rate equation with cost functions, which are provided for four primary wet weather control devices, two secondary devices, and four types of storage, equations for the optimal combination of storage and treatment have been developed.

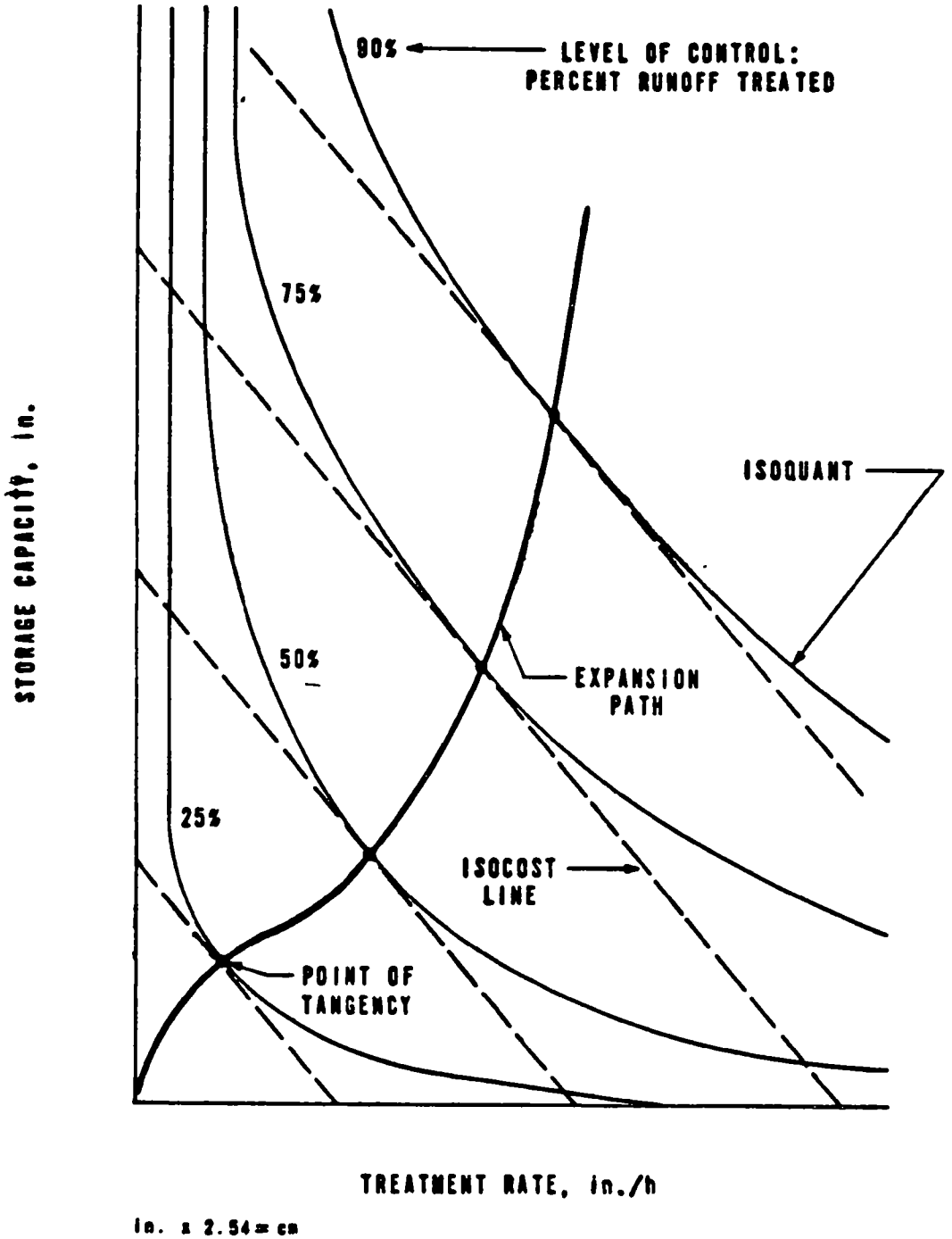

FIGURE (13): Determination of Optimal Combination of Storage/Treatment Alternatives.

SOURCE: EPA Report No. 600/8-77-014

(REFERENCE (58)).

$$S^* = \max [1/K \ln C_T/C_S [K(T_2 - T_1)], 0]$$

where S^* = optimal amount of storage, inches
C_T = unit cost of treatment
C_S = unit cost of storage

$$T^* = T_1 + (T_2 - T_1) e^{-KS^*}$$

where T^* = optimal amount of treatment, inches per hour

The following equation gives the cost of this optimal combination

$$Z^* = C_S S^* + C_T T^*$$

where Z^* = total annual cost for optimal solution, dollars per acre.

WATER RESOURCES ENGINEERS STORMWATER MANAGEMENT MODEL

This model is a modified version of U.S. Environmental Protection Agency's Stormwater Management Model and simulates the time-varying combined storm and dry weather runoff and wastewater quality of several drainage areas (catchments) and a sewer and open channel network. It represents a comprehensive formulation of sewer system flow phenomena coupled with water quality computations. Flow routing is based on dynamic wave equations and considers upstream and downstream flow control, backwater, and flow reversal. The solution is coupled with hydraulic equations for flow control, diversion structures, and pumping stations. Surcharging and pressure flow is computed independently for each junction by a special formulation. Both dry weather and stormwater quality are computed for 23 constituents including biochemical oxygen demand, suspended solids, phosphorus, oil, grease, etc. Treatment processes are not modeled nor does the model include real-time control, design, or cost computations. It is limited to the simulation of single runoff events and includes special provisions which reduce input data requirements and computer running time. Data need only be defined for typical urban subcatchment elements rather than all elements, and the hydrologic computations are performed for only these typical elements. The explicit solution of the dynamic wave equations requires very small time steps and is time-consuming on the computer. Finally, this model is useful where the simulation of the less common hydraulic phenomena is important and water quality routing is desired. (5)

CH2M-HILL WASTEWATER COLLECTION SYSTEM ANALYSIS MODEL (SAM)

This particular model simulates time-varying runoff in a combined sewer system consisting of several drainage areas and conveying branch sewers and open channel networks. It is based on formulations of the USEPA Stormwater Management Model, but is adopted to run on small computers. It offers the consulting engineer or municipality several ways to introduce flow at many locations in a sewer system and can accumulate and route these incoming hydrographs through the system and will produce upon request reports of hydrographs and Hydraulic Grade Line (HGL) at any location in the system.

SAM models the transport of fluid in the sewer system with the kinetic wave equations, which are simplified versions of the full equations of spatially varied, unsteady flow. Time increments for this model range from 5 to 60 minutes. Input of data is command-driven, i.e., data describing the sewer system are introduced with one, two, or three word commands. SAM will evaluate incoming hydrographs for the user: sanitary flows are described by acreage, population density, per capita flow, and a diurnal peaking-factor curve; storm flows are described by basin acreage, slope, length, and soil conditions. This model has been used in small to large size municipalities as part of infiltration/inflow studies, capacity studies for sewer improvements, design of overflow pipes and structures, inventory, and as an aid in the design of new portions of collection systems. (53)

BRITISH ROAD RESEARCH LABORATORY MODEL (BRRL)

The BRRL model simulates time-varying runoff in combined sewer systems consisting of several drainage areas and a converging branch sewer and open channel network. The model is limited to the simulation of single runoff events and computes surface runoff only from impervious areas. Water quality, real-time control and design features are not included. In addition, downstream flow control, backwater, flow reversal, surcharging, pressure flow, and diversion structures are not modeled. As a result of extensive tests done with hydrologic data, the model appears to produce satisfactory results for drainage areas of less than five square miles if the impervious area is more than 15 percent of the drainage area and if the frequency of storm is less than 20 years. It requires a minimum of data and provides an accurate means of computing runoff from paved sections of urban drainage areas. (5)

CHICAGO FLOW SIMULATION PROGRAM

This model is intended for contiuous simulation of large drainage basins consisting of sewered and nonsewered areas, and simulates time-varying runoff in combined sewer systems and nonurban drainage areas. Flow routing includes provisions for flow and storage in floodplains. Water quality, real-time control, and design features are not included, nor are downstream flow control, backwater, flow reversal, surcharging, pressure flow, or diversions modeled. The model is easy to use but is limited in its applicability by the assumptions inherent in precipitation-runoff computations which neglects drainage area shape, slope, and surface roughness in sewered areas and impervious sections of nonsewered areas and assumes a constant surface roughness for all pervious areas in nonsewered areas. Testing of this model on mostly nonurban areas ranging in size from 4.7 to 102 square miles produced satisfactory results. (5)

DORSCH CONSULT HYDROGRAPH - VOLUME METHOD

This model simulates time-varying runoff in combined sewer systems consisting of several drainage areas and a sewer and open channel network. Flow-routing is based on dynamic wave equations and simulates backwater, surcharging, and pressure flow, but not flow reversal. The model is limited to the simulation of single runoff events. Water quality, real-time control, and design features are not included. The solution of the dynamic wave equations provides an accurate means of computing flow routing considering upstream and downstream boundary conditions and special hydraulic structures. This model has been used extensively and model testing has resulted in good agreement between measured and computed runoff. The Quantity Quality Simulation Program can be used in continuous or single runoff events. Its extensive capabilities include backwater, surcharging, pumping stations, various diversion structures, storage, overflow, in-line treatment, and statistical analysis of results, but does not include snowmelt, sedimentation, scour, water quality reactions, or design and costing capabilities. (5)

UNIVERSITY OF MASSACHUSETTS COMBINED SEWER CONTROL SIMULATION MODEL

This model simulates the time-varying runoff of several drainage areas (catchments) and a string of circular sewers. It computes surface runoff from impervious areas using hourly rainfall data which is computed by a separate Markov chain model. Flow routing is accomplished with a solution of the dynamic wave equations which considers upstream and downstream flow control, backwater, and flow reversal. Water quality, real-time control, and design features are not included nor are special sewer system facilities (e.g., diversion structures, storage facilities) modeled. This model is formulated for continuous simulation, but neglects evapotranspiration and snow accumulation and melt. (5)

CHICAGO RUNOFF AND POLLUTION MODEL

This model continuously simulates time-varying runoff and water quality in combined sewer systems. It can also simulate surcharging and diversion structures. Water quality simulations include the computation of biochemical oxygen demand and suspended solids as functions of stormwater runoff, consideration of dry weather flow and quality, and drainage area water quality balance between wet weather periods. Stormwater runoff and flow routing portions of the model use methods included in the computer version of the Chicago Hydrograph Method. Real-time control, design, and cost computations are not included. The computer program used in this model has been tested and applied. (5)

HYDROCOMP SIMULATION PROGRAM

This program is formulated for the continuous simulation of water flow and quality from several drainage areas and routing in a converging branch sewer and open channel network. The water quality model simulates 17 water quality constituents including their reactions and interactions in natural water bodies. However, it does not include wastewater treatment, real-time control, design, or cost computations. A major advantage of this model is the capability for continuous simulation of water flow and quality in networks since it accounts for drainage area moisture and water quality between runoff events. The Hydrocomp Simulation Program is a proprietary model and users must contract with Hydrocomp International, Inc. (5)

CHAPTER 8 - REGULAR MAINTENANCE PROGRAM

A community must develop and institute a regular maintenance program as part of its operational plan to ensure that the integrity of the sewer system is maintained. Records of this program should be kept also with inspection forms/checklists developed by the municipality to document the fact that the system is adequately maintained in a timely manner. Optimum operational capability of the sewer system depends on an active preventive maintenance program rather than on passive maintenance which reacts to problems after they occur. The preventive maintenance program should incorporate general maintenance of the entire sewer system, especially the system controls, with special emphasis on those portions of the system where high pollutant loads, heavy use of the system, or sophistication of the system components warrant more frequent maintenance, and any necessary source controls.

The maintenance program for the sewer system, with its schedules and specific procedures, should be incorporated into a maintenance manual readily accessible to the appropriate personnel, similar to the O&M manual for the treatment plant maintenance. Development of the maintenance manual can be done by consultant or in-house staff.

Relative to the sewer system, regular maintenance should include inspection, cleaning, and, where necessary, repair of sewers, catchbasins, and regulators. Also, the maintenance staff should become familiar with the municipality's sewer use ordinance so that unauthorized connections to the sewer system can be identified and disconnected. Inspections of sewers will identify leaks, breaks, and poor connections that must be repaired in order to minimize infiltration. Regular cleaning of the sewers to remove large debris that can not be entrained by normal flow will restore full capacities and self-scouring velocities so greater flows may be transported or stored during wet weather. Regular inspections of catchbasins and regulators will identify accumulated solids to be removed and any failures that have to be repaired. Also, mechanical regulator parts should be regularly lubricated and all parts checked for corrosion and wear. Maintenance considerations for many of the regulators are highlighted in specific descriptions in Chapter 5.

CHAPTER 9 - PREPARATION OF AN OPERATIONAL PLAN

The previous chapters have presented a menu of items that may be selected for use in an operational plan. The primary purpose of this operational plan is to reduce the amount of contaminants in the discharges to the receiving waters through the use of management practices while still meeting Federal and State effluent standards at the treatment plant. While many of the menu items are required selections, the municipality does have some choices available to it. These choices will be made mainly in the area of control strategy.

The conveyance and treatment controls described in this guidance have been discussed as separate solutions. Many of these methods can and should be combined to optimize the effectiveness of the combined sewer overflow control program. In order to determine which management practices are best combined, it is important to know how the practices interrelate with each other.

Pollutant control minimizes the amount of contaminants that get into the stormwater. Street cleaning and catchbasin cleaning help reduce the amount of pollutants entering the sewer. For pollutants that do enter or are deposited in the sewers, sewer flushing during dry weather, transports the contaminants to the treatment plant before stormwater washes it out via an overflow. Since the stormwater in the combined sewers is lower in pollutant loading, partial treatment of the dilute sewage is a compatible practice. This allows the maximization of flow through the treatment plant with less overflow volume. Another possible treatment practice compatible with the above source controls is full treatment at the plant with maximization of flow detention. Besides reducing deposits, sewer flushing also maximizes the sewers' storage capacities. Flow attenuation in the sewers is best achieved through the proper setting of regulators to back flow sewage to utilize the combined sewers' storage capacities before allowing overflows. Another possible method of attenuation was attempted in Skokie, Illinois. There, street surface and sub-surface detention of stormwater are used to relieve the pressure on the sewer system while preventing basement flooding. (51)

The selection of the practices from the menu that will be most effective is site specific. A municipality must look at its own conveyance and treatment system to determine what controls will work best. This examination should start with the flow of the rain over the land and proceed sequentially through the entrance into and flow in the sewers to the treatment plant and outfalls. Depending on what the problems are and where they are located, different combinations of control practices may be effective.

As mentioned before, the menu items include both required and optional components of an operational plan. Regardless of which, the municipality must specifically indicate the items selected and the manner in which it will be used and/or maintained. The operational plan should include the following:

1. <u>System Inventory</u> - identification of all control structures, sewer sizes, key hydraulic monitoring locations, etc. Included are:

   -system maps
   -hydraulic analysis
   -regular flow measurements at key hydraulic control points
   **sampling program and schedule
   **physical verification of maps
   **modeling

2. Administrative Aspects - identification of all administrative devices and how they will be enforced. Included are enforcements schedules and logs for:

   -sewer use ordinance
   -analysis of flow reduction/increase capacity when approaching system capacity
   **intermunicipal agreements
   **industrial agreements

3. Maintenance - a detailed description of the procedures, schedule, and log for maintenance of existing and proposed facilities including:

   -sewer system inspections
   -sewer system controls
   -catchbasin cleaning
   -sewer flushing
   **street cleaning
   **industrial source control
   **rehabilitation of sewers

4. Control Strategy - a detailed description of the steps to be taken in order to minimize overflows, including where and when overflows occur. Strategies should be developed for:

   -sewer system controls
   -treatment plant (as a whole and for unit processes)

5. Schedule of Activities - a schedule of modification, replacement, upgrading, and/or construction of needed facilities.

NOTE: "-" required items
"**" optional/as necessary items

ANNOTATED BIBLIOGRAPHY

This annotated bibliography of user assistance tools for those concerned with combined sewer overflow abatement is intended to supplement the Combined Sewer Overflow Strategy Technical Guidance. It is organized alphabetically by title of the documents. It should be noted that this list is not all inclusive. For many actual problems, there are other publications and tools which would be useful.

The format is brief. Report titles and code numbers followed with the author of the report and where it is available. NTIS is the National Technical Information Service, Springfield, Virginia 22161. The PB number is the designated accession number and must be used when ordering. All EPA Research/Development Reports are in the NTIS system along with most other government R&D reports. In addition, the documents listed below are available in the U.S. Environmental Protection Agency, Region V library (230 South Dearborn, 16th floor, Chicago, Illinois 60604) in the form of microfiche or actual softcover documents.

1) ABATEMENT OF DEPOSITION AND SCOUR IN SEWERS by Michael B. Sonnen, Water Resources Engineers, Inc. (Walnut Creek, California). EPA No. 600/2-77-212, NTIS No. PB 276-585. November 1977.

Feasible methods are identified for reducing first-flush pollution in new and existing storm and combined sewer systems. A mathematical model is described which was developed to simulate the behavoir of solids in pipelines and to evaluate the costs of first-flush abatement alternatives.

2) ANALYZING THE EXISTING COLLECTION SYSTEM by Dr. William C. Pisano, Environmental Design and Planning, Inc. (Cambridge, Massachusetts). Presented at the US EPA Technology Transfer Seminar Series on Combined Sewer Overflow Assessment and Control Procedures.

This paper presents overview details of a study addressing the combined sewer problems in old congested eastern community. Collection system management with respect to diagnosing sewer system remedial repairs are emphasized, although other best management practices are considered.

3) AN ASSESSMENT OF AUTOMATIC FLOW SAMPLERS by EG&G Washington Analytical Services. EPA No. 600/2-75-065, NTIS No. PB 250-987.

A review of field experience with automatic sampling equipment covering problems encountered and lessons learned is given. Technical assessment of the state-of-the-art in automatic sampler technology including design guides for development of a new automatic sampler is presented. Eighty-two model classes covering over 200 models of commercially available and custom designed automatic samplers are given including description, characterizations, and evaluations.

4) ASSESSMENT OF BENEFITS RESULTING FROM CONTROL OF COMBINED SEWER OVERFLOWS by Eugene D. Driscoll and John L. Mancini, Hydroscience, Inc. Presented at US EPA Technology Transfer Seminars on Combined Sewer Overflow Assessment and Control Procedures (1978).

This paper presents and discusses methods and information which are required to address the stormwater issue. Major topics of discussion include water quality in urban areas (causes), estimation of benefits (method of benefit analysis), analysis of receiving water (methods of analysis for sewers, estuaries, and lakes), and development of a plan of action.

5) ASSESSMENT OF MATHEMATICAL MODELS FOR STORM AND COMBINED SEWER MANAGEMENT by Albin Brandstetter, Battelle Pacific Northwest Laboratories (Richland, Washington). Chi-Yuan Fan, Project Officer, US EPA-MERL (Cincinnati, Ohio). EPA No. 600/2-76-175a. August 1976.

Mathematical models for the simulation of urban runoff are presented and evaluated to determine their suitability for the engineering assessment, planning and design of combined sewer systems, and control of combined sewer overflows. These models are evaluated on the basis of information provided by the model builders and users.

6) BENEFIT ANALYSIS FOR COMBINED SEWER OVERFLOW by U.S. Environmental Protection Agency - Environmental Research Information Center (Cincinnati, Ohio 45268). EPA No. 625/4-79-013. April 1979.

This publication is intended for use by elected officials of municipalities served by combined sewers, their technical staff members, and their consultants. It concerns the analysis of the benefits anticipated from control of combined sewer overflows. The combined sewer overflow problem, legislation and regulations, beneficial uses, and the relationship with pollutant sources, various combined sewer overflow control altenatives and their costs, and case studies are discussed.

7) BEST MANAGEMENT PRACTICES IMPLEMENTATION: ROCHESTER, NEW YORK by Cornelius B. Murphy, Jr., PH.D., Dwight A. Mac Arthur, P.E., David J. Carloe, P.E., O'Brien & Gere Engineers, Inc.; Thomas J. Quinn, P.E., James E. Stewart, Monroe County Division of Pure Waters. EPA No.905/9-81-002, NTIS No. PB 82-171067. April 1981.

Various management options for the reduction of combined sewer overflows are evaluated for Rochester, New York. Both source and system controls are presented. Also included is an investigation of the use of split-flow at the wastewater treatment plant.

8) CATCHBASIN TECHNOLOGY OVERVIEW AND ASSESSMENT by John A. Lager, William G. Smith, and George Tchobanoglous, Metcalf & Eddy, Inc. (Joint venture with Hydro-Research-Science in Santa Clara, CA) (Palo Alto, CA). EPA No. 600/2-77-051, NTIS No. PB 270-092. May 1977.

Current catchbasin technology is reviewed, evaluated, and assessed. Detailed findings are presented in sections dealing with state-of-the-art review, review of variables affecting catchbasin efficiency, hydraulic modeling analysis, assessment of the role of catchbasins, economic evaluation of alternative storm and combined sewer design, and review of recent developments and continuing program needs. Example problems of the evaluation of catchbasin performance and economics are included. A recommended catchbasin design configuration based upon hydraulic performance and sediment capture efficiency is presented.

9) CHARACTERIZATION AND TREATMENT OF COMBINED SEWER OVERFLOWS by City and County of San Francisco. EPA No. 670/2-75-054. April 1975.

An evaluation is performed on the results from the sampling of two combined sewer overflows in San Francisco. The quantity of each biological and chemical constituent in the sewage is related to the time after the start of a storm.

10) COMBINED SEWER OVERFLOW ABATEMENT ALTERNATIVES - WASHINGTON D.C. by Roy F. Weston (Environmental Scientists and Engineers). NTIS No. PB 203-608. August 1970.

Urban runoff in the Washington D.C. area is characterized in this report. Also, high-rate filtration and other alternative solutions to the combined sewer overflow problem are technically and economically evaluated. The alternatives include reservoir storage, treatment at overflow points, conveyance tunnels, and sewer separation.

11) COMBINED SEWER OVERFLOW ABATEMENT PLAN by Peter L. Davis and Frank Borchardt. EPA No. R2-73-170. April 1974.

Combined sewer overflows and stormwater runoffs are studied in the Des Moines, Iowa area. Data was collected to characterize runoffs and overflows. Also, an analysis is made of the different solutions to the overflow problem, including various collection and treatment systems.

12) COMBINED SEWER OVERFLOW ABATEMENT PROGRAM, ROCHESTER, N.Y. by Frank J. Drehwing, Cornelius B. Murphy, Jr., David J. Carleo and Thomas A. Jordan, O'Brien & Gere Engineers, Inc. (Syracuse, New York). Project Officers - Richard J. Field/Anthony Tafuri, Storm and Combined Sewer Section, Wastewater Research Division (Edison, New Jersey) and Lawrence Moriarty (US EPA, Region II). Grant Officer - Ralph Christensen, Great Lakes National Program Office (Chicago, Illinois). EPA No. 600/2-81-113, NTIS No. PB 81-219602. July 1981.

Pollution abatement analysis conducted in conjunction with system network modeling studies and supported by combined sewer overflow (CSO) monitoring and sampling are initiated with the ultimate goal of formulating a cohesive and workable master plan for CSO reduction and control for Rochester, New York.

13) COMBINED SEWER OVERFLOW ABATEMENT TECHNOLOGY compiled by Storm & Combined Sewer Pollution Control Branch, Applied Science & Technology, FWQA (now USEPA), (Washington D.C.). EPA No. 11024-06/70.

Alternatives to storm and combined sewer pollution in a small urban area, screening and air flotation for solids removal, underflow deep tunnel concept, urban erosion and sediment control, sewer monitoring and remote control, combined sewer regulators, use of fine mesh screens and land use, and urban runoff pollution are topics highlighted in this paper.

14) COMBINED SEWER OVERFLOW SEMINAR PAPERS by the U.S. Environmental Protection Agency, Water Quality Research Laboratory (Edison, New Jersey). EPA No. 670/2-73-077, NTIS No. PB 231-836.

A brief overview of the magnitude of the wet weather flow pollution problems and what the Federal government is doing to manage and control this source of pollution is presented. Various management, control and treatment techniques are described and the most up-to-date information on design economics is presented.

15) CSO TREATMENT-POTENTIAL AND AN INFORMATION SOURCE FOR SMALL TO MEDIUM SIZED COMMUNITIES by John A. Lager and William G. Lynard, Metcalf & Eddy, Inc. (Palo Alto, California). Presented at the US EPA-Technology Transfer Seminar Series on Combined Sewer Overflow Assessment and Control Procedures (Purchase Order H 1387, Print Order 0847).

The intent of this presentation is to introduce the prospective user to this informational source with emphasis placed on alternative treatment systems. Various treatment alternatives are discussed.

16) COMBINED SEWER REGULATION AND MANAGEMENT: A MANUAL OF PRACTICE by American Public Works Assoc.. EPA No. 11022 DMU 08/70. July 1970.

Design applications, calculations, the operation and maintenance of combined sewer overflow regulator facilities and tide gates are discussed in this publication. Operation and maintenance guidelines are given as well as a sample regulator facility control program.

17) COMBINED SEWER REGULATOR OVERFLOW FACILITIES by the American Public Works Assoc. (Chicago, Illinois). NTIS No. PB 215-902. June 1970.

Current design, operation and maintenance practices used by local jurisdictions in the U.S. and Canada were determined by personal interviews and compiled in this report. Performance of regulators, the use of tide gates, new designs, European practices and the system concept of combined sewer regulation are given particular attention. Drawings and photographs of regulators, are included. Recommendations are made, the adoption of which would upgrade regulator facilities and tend to reduce receiving water pollution from combined sewer overflows.

18) A COMPUTER-BASED SYSTEM FOR REDUCTION OF COMBINED SEWER OVERFLOW IN A METROPOLITAN WASTEWATER COLLECTION SYSTEM by Ted S. Buczek, P.E. and Christopher G. Chantrill, P.E. (presented at the Water Pollution Control Federation 57th Annual Conference/Exposition). October 1984.

This paper presents the in-line storage program of the Northeast Ohio Regional Sewer District (NEORSD). The program includes installation of automatic regulators and a microprocessor-based control system.

19) COMPUTER MANAGEMENT OF A COMBINED SEWER SYSTEM by C.P. Leiser. EPA No. 670/2-74-022, NTIS No. PB 235-717. July 1974.

Computer augmented treatment and disposal (CATAD) uses in-line storage in Seattle's combined sewer system to reduce overflows. This computer controlled management system results in significant improvements in water quality. Cost data is also presented for both the construction and operation and maintenance.

20) CONTROL OF POLLUTION BY UNDERWATER STORAGE by Underwater Storage, Inc. and Silver, Schwartz, Ltd. (Washington D.C. 20036). NTIS No. PB 191-271. December 1969.

Temporary storage of combined sewer overflow in underwater rubber storage tanks is feasible and may, under suitable conditions, be effective in eliminating direct, untreated discharge of combined sewage into receiving waters during storm periods. Drainage area to be served, land use, nature of storm events, and other factors must be considered when planning an underwater storage facility. Introductory information is given regarding the problem of combined sewer overflows.

21) DEVELOPMENT AMD APPLICATION OF A SIMPLIFIED STORMWATER MANAGEMENT MODEL by John A. Lager, Theodor Didriksson, and George B. Otte, Metcalf & Eddy, Inc.. EPA No. 600/2-76-218. August 1976.

A simplified stormwater management model is presented which combines small computer programs and hand calculations. This model introduces time and probability to the analysis, emphasizes the use of the total system, and establishes size-effectiveness relationships.

22) DEVELOPMENT AND APPLICATION OF THE SWIRL AND HELICAL BEND DEVICES FOR COMBINED SEWER OVERFLOW ABATEMENT AND RUNOFF CONTROL by Richard Field and Richard Traver, US EPA - Storm and Combined Sewer Section (Edison, New Jersey).

The combined sewer overflow problem, the development of the swirl and helical bend regulators/concentrators including description of the devices as well as its operating principles are discussed. Case histories illustrating the use of the devices are given.

23) DISPATCHING SYSTEM FOR CONTROL OF COMBINED SEWER LOSSES by Metropolitan Sewer Board (St. Paul, MN). NTIS No. PB 203-678. March 1971.

A computer-based data acquisition and regulator control system was installed in the Minneapolis/St. Paul area to reduce combined sewer overflow pollution. Descriptions of the system, which required little modifications to the sewer system, and a discussion of the results are presented.

24) DRY-WEATHER DEPOSITION AND FLUSHING FOR COMBINED SEWER OVERFLOW POLLUTION CONTROL by William C. Pisano, Gerald L. Aronson, Celso S. Queiroz, Frederic C. Blanc, and James C. O'Shaughnessy, Northeastern Unversity and Environmental Design & Planning, Inc.. EPA No. 600/2-79-133. August 1979.

This publication summarizes the results of field testing in Boston. The study addresses feasibility, ease of application, and cost effectiveness of sewer flushing. This is a supplement to "Procedures for Estimating Dry Weather Pollutant Deposition in Sewerage Systems".

25) THE DUAL FUNCTIONING SWIRL COMBINED SEWER OVERFLOW REGULATOR/CONCENTRATOR by Richard Field, Storm and Combined Sewer Technology Branch, U.S. EPA (Edison, New Jersey). EPA No. 670/2-73-059, NTIS No. PB 227-182. September 1973.

The swirl concentrator/regulator is described. The topics covered in this doucment include the general description of the swirl device, solids separation efficiencies (removals expected), design rationale (hydraulics, head considerations, sizing, special design features), and potential applications and research needs (potential uses).

26) FLOW REGULATOR PILOT STUDY - RUNOFF CONTROL PROGRAM -- HOWARD STREET SEWER DISTRICT, (Skokie, IL) by Donohue and Associates, Inc.. March 1984.

The purpose of this document is to evaluate flow regulator under field conditions likely to be encountered in a system-wide application of regulators in Skokie. Specifically, it is to - determine the initial cost of commercially available flow regulators and devices, evaluate flow regulator installation, removal and adjustment requirements, and observe and evaluate the hydraulic and performance characteristics of flow regulators under a variety of field conditions. Results of this study are given and the hydrobrake flow regulator is recommended for installation in the District's sewer system.

27) A FLUSHING SYSTEM FOR COMBINED SEWER CLEANSING prepared by the US EPA, Water Quality Research. EPA No. 11020-03/72, NTIS No. PB 210-858.

Due to the significant contribution of pollutional material to overflows from combined sewers as a result of solids deposits in lateral sewers, the use of a periodic flushing operation is evaluated as a means of maintaining lower levels of these deposited materials during dry weather periods. Full-scale tests were conducted on two variable-slope test sewers and results are given.

28) JOINT DRY/WET WEATHER THREATMENT OF MUNICIPAL WASTEWATER AT CLATSKANIE, OREGON by Arthur H. Benedict and Vernon L. Roefs, Whiteley - Jacobsen and Associates. EPA No. 600/2-81-061, NTIS No. PB 81-187262. April 1981.

This report presents the two year study of joint dry and wet weather treatment at Clatskanie, Oregon. Even though the plant was specifically designed and constructed for this specific purpose, useful information is presented on the dual use of a primary clarifier and an activated sludge system.

29) LANSING WASTEWATER SYSTEM IMPROVEMENTS - MAJOR INTERCEPTOR REHABILITATION - CONTRACT 83-S-2, "LEAPING ORIFICE" "FLOW REGULATING DEVICE", Attachment 1 to letter dated February 28, 1984 from Mc Name, Porter and Seeley Engineers (Ann Arbor, Michigan).

The leaping orifice regulator is described in terms of principle of operation. Other types of dynamic flow controls are discussed. A cost-effective analysis is conducted and results are presented. The leaping orifice was shown to be the most cost-effective solution.

30) MANAGEMENT AND CONTROL OF COMBINED SEWER OVERFLOWS by Richard Field, Storm & Combined Sewage Pollution Control Branch, Water Ouality Research Division, US EPA (Edison, New Jersey 08817). NTIS No. PB 229-575. January 1972.

The combined sewer overflow problem is discussed along with various control technology alternatives. Among the alternatives presented are maximizing treatment at the wastewater treatment facility during wet-weather, improving regulator maintenance, controlling infiltration/ inflow, surface housekeeping, flow regulation, and others.

31) METHODOLOGY FOR THE STUDY OF URBAN STORM GENERATED POLLUTION AND CONTROL by Richard E. Wullschleger, Alphonse E. Zanoni, and Charles A. Hansen Envirex, Inc.. EPA No. 600/2-76-145. August 1976.

This report presents recommended procedures for sampling, analyzing, and evaluating storm generated pollution discharge. These procedures are intended to insure that all discharges and treatment options are evaluated by the same method.

32) THE METHODOLOGY OF ANALYSIS FOR A COMBINED SEWER OVERFLOW ABATEMENT PROGRAM by Cornelius B. Murphy, Jr., O'Brien & Gere Engineers, Inc. Presented at the US EPA Technology Transfer Seminar Program, Chicago, Illinois. July 1978.

The methodology used in analyzing various CSO abatement alternatives is discussed. Major topics covered in this document include an introduction to the urban runoff problem, facility planning for CSO abatement, methodology of alternative analysis, technical procedures, and conclusions.

33) MODELS FOR COMBINED SEWER OVERFLOW presented by Henry C. Torno, U.S. Environmental Protection Agency - Office of Research and Development. US EPA Technology Transfer Seminar Series.

This document discusses the application of computer-based mathematical models in the assessment of combined sewer overflows, including the factors responsible for the expanded use of these models and the US EPA modeling program.

34) MONITORING PROGRAM FOR URBAN STORMWATER ASSESSMENT by Thomas L. Meinholz, Harper-Owes Consultants, Milwaukee, Wisconsin. Presented at Seminar on Combined Sewer Overflow Assessment and Control Procedures, Windsor, CT. May 1978.

This document discusses recommended standard procedures used in all phases of projects dealing with storm-generated discharges. Discussion centers around three major areas: recommended methods of sampling, choice of quality parameters to be utilized, and laboratory analytical procedures to be followed.

35) AN OVERVIEW OF THE U.S. ENVIRONMENTAL PROTECTION AGENCY'S STORM AND COMBINED SEWER PROGRAM COLLECTION SYSTEM RESEARCH by Richard Field, Storm & Combined Sewer Section, US EPA (Edison, New Jersey). EPA No. 600/J-82-237, NTIS No. PB 83-168245. 1982.

Presented in this document is the state-of-the-art and assessment of the US EPA Storm and Combined Sewer Program collection system research pertaining to management alternatives for wet and dry weather wastewater transport and interception. Emphasis is on the optimal use of the existing sewer system and optimal city-wide cost-effective strategy for the dual purpose of combined sewer drainage and overflow pollution control.

36) A PLANNING AND DESIGN GUIDEBOOK FOR COMBINED SEWER OVERFLOW CONTROL AND TREATMENT by Dulcie A. Weisman and Richard Field, U.S. Environmental Protection Agency, MERL (Storm and Combined Sewer Section) Cincinnati, Ohio 45268. EPA No. 600/2-82-064, NTIS No. PB 82-259235. August 1982.

This publication presents a survey of control and treatment of combined sewer overflows prepared to assist Federal, State, and municipal agencies, and private consultants. It is divided into several chapters discussing various control and treatment alternatives such as sewer control, collection system control, storage/treatment, etc.

37) POLLUTIONAL EFFECTS OF STORMWATER AND OVERFLOWS FROM COMBINED SEWER SYSTEMS prepared for the US Dept. of Health, Education, and Welfare - Division of Water Supply & Pollution Control. NTIS No. PB 217-169.

This study defines the problem resulting from combined sewer overflows and examines existing and possible solutions along with cost analyses. Four topics guide the study which seeks to learn the quantity and quality of the overflows; effects on streams, water uses and users; adverse effects, and existing or suggested control measures and their effectiveness; and costs necessary for control.

38) PREVENTION AND CORRECTION OF EXCESSIVE INFILTRATION AND INFLOW INTO SEWER SYSTEMS - A MANUAL OF PRACTICE by the American Public Works Association. EPA No. 11022 EFF 01/71. January 1971.

This manual serves as a guide for the evaluation of contruction practices and the performance of sewer system surveys to control and eliminate excessive infiltration and inflow. Also included is information on the cost-benefit analysis of corrective measures.

39) PROCEDURES FOR ESTIMATING DRY WEATHER POLLUTANT DEPOSITION IN SEWERAGE SYSTEMS by William C. Pisano and Celso S. Queiroz, Environmental Design & Planning, Inc.. EPA No. 600/2-77-120. July 1977.

This publication presents a set of generalized equations for estimating the deposition loading of dry weather pollutants. Total pollutant loadings are related to sewer system characteristics by predictive equations. The complexity of the equations used depends on the type of sewer system data available.

40) PROCEEDINGS STORMWATER MANAGEMENT MODEL (SWMM) - USER GROUP MEETING JUNE 19-20, 1980, US EPA, Environmental Research Laboratory. December 1980.

This publication presents eleven papers on topics related to the development and application of computer-based mathematical models. Topics include applications of runoff models, and kinematic design storms.

41) QUANTITY-QUALITY SIMULATION (QQS): A DETAILED CONTINUOUS PLANNING MODEL FOR URBAN RUNOFF CONTROL - VOLUME 1. MODEL DESCRIPTION, TESTING, AND APPLICATIONS by Wolfgang F. Geiger and Helmut R. Dorsch, Dorsch Consult Ltd.. EPA No. 600/2-80-011. March 1980.

This report presents a comprehensive mathematical model of combined sewer overflow pollution in a continuous mode. This model simulates stormwater runoff, overflow pollution loadings and control measures.

42) RETENTION BASIN CONTROL OF COMBINED SEWER OVERFLOWS. Springfield Sanitary District and the U.S. Environmental Protection Agency, Office of Water Quality. NTIS No. PB 200-828.

Information on the combined sewer overflow problem is given as well as an evaluation of the use of retention basins to control combined sewer overflows. Considerations and suggestions for the design of these basins are included.

43) SEWER FLOW MEASUREMENT: A STATE-OF-THE-ART ASSESSMENT by EG&G Washington Analytical Sevices Center. EPA No. 600/2-75-027, NTIS No. PB 250-371.

A brief review of the characteristics of storm and combined sewer flows is given, followed by a general discussion of the need for flow measurement, types of flow data required, and the time element in flow data. Discussion of flow measurement equipment characteristics presents both equipment requirements as well as desirable features and includes an evaluation sheet which can be used for a particular application. Over 70 different generic types of primary flow measurement devices along with evaluations are presented.

44) SEWER SYSTEM EVALUATION, REHABILITATION AND NEW CONSTRUCTION - A MANUAL OF PRACTICE by Richard H. Sullivan, Morris M. Cohn, Thomas J. Clark, William Thompson, and John Zaffle, American Public Works Association. EPA No. 600/2-77-017d. December 1977.

This manual presents information on sewer system evaluations, sewer rehabilitation, and design of new sewers. Procedures are discussed on performing the Sewer Analysis and Sewer System Evaluation Study (SSES). Also discussed are sewer cleaning equipment and methods of inspecting sewers.

45) SHORT COURSE PROCEDURES - APPLICATIONS OF STORMWATER MANAGEMENT MODELS by Francis A. DiGiano, Donald D. Adrian, Peter A. Mangarella, University of Massachusetts (Amherst, Massachusetts). Anthony N. Tafuri - Project Officer, US EPA MERL (Cincinnati, Ohio). EPA No. 600/2-77-065. March 1977.

The objective of this document is to provide practitioners with the capability to apply specific mathematical models directly. Discussion of the common components of stormwater management models is given. One particular model, the US EPA Stormwater Management Model, is described in detail and an illustrative case study is presented. The criteria for model selection and application as well as the collection of field data for model calibration are discussed.

46) STORM AND COMBINED SEWER POLLUTION SOURCES AND ABATEMENT: ATLANTA, GEORGIA by Black, Crow, and Eidsness, Inc. (Atlanta, Georgia). NTIS No. PB 201-725. January 1971.

Six urban drainage basins within the City of Atlanta, Georgia served by combined and separate sewers are studied to determine the major pollution sources during storm events. Rainfall frequency analysis and simulation techniques are utilized to obtain design criteria for alternative pollution abatement schemes.

47) STORM WATER MANAGEMENT MODEL - VOLUME I - FINAL REPORT, by Metcalf & Eddy, Inc., University of Florida, and Water Resources Engineers, Inc. EPA No. 11024 DOC 07/71. July 1971.

This publication presents the development and testing of a comprehensive simulation of the quality and quantity of stormwater during a storm event. This model will assist administrators in optimizing control of overflows and runoffs.

48) STORM WATER MANAGEMENT MODEL: LEVEL I - PRELIMINARY SCREENING PROCEDURES by James P. Heaney, Wayne C. Huber, and Stephan J. Nix, University of Florida. EPA No. 600/2-76-275. October 1976.

This publication presents a desktop procedure to estimate the quality and quantity of urban runoff. This procedure is a simplification of the orginal USEPA Storm Water Management Model (SWMM). Using generalized results of a nationwide assessment, the optimal combination of storage and treatment may be estimated.

49) A STRATEGY FOR INTEGRATING STORAGE TREATMENT OPTIONS WITH MANAGEMENT PRACTICES by James P. Heaney and Stephen J. Nix, University of Florida Department of Environmental Engineering Sciences, Gainsville, Florida 32611. Presented at US EPA - Technology Transfer Seminar on Combined Sewer Overflow Assessment & Control Procedures - Windsor Locks, CT. May 1978.

The purpose of this paper is to discuss attempts made by the University of Florida to derive methodologies to provide the planner with preliminary cost estimates and strategies. Emphasis is placed on a graphical procedure used to optimally integrate storage treatment options with other management practices.

50) STREAM POLLUTION AND ABATEMENT FROM COMBINED SEWER OVERFLOWS: BUCYRUS, OHIO by Burgess & Niple, Ltd. (Columbus, Ohio). NTIS No. PB 195-162. November 1969.

This report presents the results of a detailed engineering investigation and comprehensive study regarding the pollutional effects from combined sewer overflows on the Sandusky River at Bucyrus, Ohio. In addition, benefits, economics, and feasibility of alternate plans for pollution abatement from the combined sewer overflows are evaluated.

51) SURFACE AND SUB-SURFACE DETENTION IN DEVELOPED URBAN AREAS: A CASE STUDY, by Stuart G. Walesh, P.E. and Mark L. Schoeffmann, P.E. (presented at the American Society of Civil Engineers Conference "Urban Water-84", Baltimore, Maryland). May 1984.

Surface and subsurface detention of storm water flow is being used in Skokie, Illinois to prevent sewer surcharging and basement flooding. This paper presents the modeling approach used to diagnose the sewer surcharging problem and to test alternative control systems. Also discussed are the components of the system chosen in Skokie.

52) SWIRL AND HELICAL BEND POLLUTION CONTROL DEVICES by Richard H. Sullivan, James E. Ure, Fred Parkinson, and Paul Zielinski, American Public Works Association. EPA No. 600/8-82-013. July 1982.

This design manual consolidates information on secondary-flow-motion, wastewater control devices, the swirl and the helical bend regulator/separator. The information includes design guidelines, costs, operation and maintenance, and results from prototype tests.

53) SYSTEM ANALYSIS MODEL. Letter of June 23, 1986 from CH2M Hill Engineers (Corvallis, Oregon).

This letter and attachment gives a description of the System Analysis Model. It analyzes combined, sanitary, or storm sewer collection systems. It can be used in municipalities of different populations and sizes.

54) URBAN RUNOFF AND COMBINED SEWER OVERFLOW by Richard Field, Robert Dorival, and Joseph Janeczek, Jr., Storm & Combined Sewer Section, Wastewater Research Division (Edison, New Jersey). EPA No. 600/J-79-066, NTIS No. PB 80-177033.

A general discussion of urban runoff pollution including the impact of urban runoff on water quality, and the control and handling of non-point source pollutants is presented. The importance of various planning and design considerations is stressed. Long range control planning, management strategies, runoff simulation and various computer models are discussed. The benefits of source and collection system controls are presented on a cost-effective basis, and a review is made of innovative physical/chemical treatment process.

55) URBAN RUNOFF RECEIVING WATER IMPACTS by Richard Field and Robert Turkeltaub, US EPA-Storm and Combined Sewer Section (Edison, New Jersey). EPA No. 600/J-81-546, NTIS No. PB 82-205915. April 1982.

Very little information on receiving water impacts caused by urban stormwater and combined sewer overflow can be found. As a result, the US EPA Storm and Combined Sewer Section began an effort to fill this data void and to develop control methodologies based on receiving water impacts. The basic objective of this paper is to present an overview of the SCS Program's receiving water impact subprogram.

56) URBAN STORMWATER AND COMBINED SEWER OVERFLOW IMPACT ON RECEIVING WATER BODIES - PROCEEDINGS OF NATIONAL CONFERENCE (Orlando, FL) Nov. 26-28, 1980 - Yousef A. Yousef, Martin P. Wanielista, Waldron M. Mc Lellon, and James A. Taylor-(Editors), University of Florida (Orlando, FL). EPA No. 600/9-80-056. December 1980.

The conference provides a forum for researchers, practitioners, and others to receive an update on the state-of-the-art and to learn about research findings dealing with stormwater impact. The main topical areas considered includes: combined sewer overflow costs vs. benefits; impacts on lakes, rivers, and estuaries; ecological response to stormwater and methodologies for stormwater impact assessment; and stormwater management through the use of receiving water quality models for planning and abatement methodology.

57) URBAN STORMWATER MANAGEMENT AND TECHNOLOGY: AN ASSESSMENT by John A. Lager, and William G. Smith, Metcalf & Eddy, Inc., (Palo Alto, California). EPA No. 670/2-74-040. December 1974.

An investigation and analysis of promising, completed and on-going urban stormwater projects is presented. Also provided is a compendium of project information on management and technology alternatives within the framework of problem identification, evaluation procedures, and program assessment and selection with respect to the stormwater problem (combined sewer overflow, for example).

58) URBAN STORMWATER MANAGEMENT AND TECHNOLOGY: UPDATE AND USERS' GUIDE by John A. Lager, William G. Smith, William G. Lynard, Robert M. Finn and E. John Finnemore, Metcalf & Eddy, Inc. (Palo Alto, California). Richard Field - Project Officer, US EPA Storm and Combined Sewer Section (Edison, New Jersey). EPA No. 600/8-77-014. September 1977.

Presented in this document is the continuation and reexamination of the state-of-the-art in storm and combined sewer technology. Assessment of urban runoff pollution is referenced to the developing National database, localized through selective monitoring and analysis, and quantified as to potential source and magnitude using simplified desktop procedures and mathematical models. Control and corrective measures are separated into nonstructural, termed best management practices (BMP), and structural alternatives. Several case histories are given.

59) URBAN STORMWATER MANAGEMENT MODELING AND DECISION-MAKING by James P. Heaney, Wayne C. Huber, Hason Sheikh, Miguel A. Medina, J. Robert Doyle, W. Alan Pelty, and John E. Darling, University of Florida. EPA No. 670/2-75-002. May 1975.

Programming refinements are introduced to USEPA Storm Water Management Model to provide greater flexibility and reliability. Also, decision making capabilities are developed for use in managing stormwater pollution.

60) URBAN STORMWATER MANAGEMENT WORKSHOP PROCEEDINGS edited by Richard Field, US EPA Storm and Combined Sewer Section, (Edison, New Jersey). EPA No. 600/9-78-017. August 1978.

Purpose of this document is to present up-to-date results and technical information from projects sponsored under US EPA Urban Runoff Control Research Development and Demonstration Program. Topics covered include urban stormwater management, planning for control of urban runoff and combined sewer overflows, cost effective and comparative analysis from 208 areawide assessment study on combined sewer overflow and urban stormwater pollution control.

61) THE USE OF STREET CLEANING OPERATIONS IN REDUCING RUNOFF POLLUTION by Robert Pitt, Woodward - Clyde Consultants (Presented at EPA Technology Transfer Seminar Series on Combined Sewer Overflow Assessment and Control Procedures). 1978.

This paper presents generic information on the effectiveness and cost characteristics of street cleaning operations. Included topics of discussion are sources of street surface contaminants, concentrations of contaminants as a function of particle size, the ability of street cleaning equipment to remove these contaminants, and street cleaning costs.

62) USEFUL TECHNOLOGICAL INFORMATION ON SEWER FLUSHING by Dr. William C. Pisano, Environmental Design and Planning, Inc. (Presented at EPA Technology Transfer Seminar Series on Combined Sewer Overflow Assessment and Control Procedures). 1978.

This paper presents technical information on field flushing conducted in Boston. Objectives of the field testing include: evaluate different manual sewer flushing techniques, monitor deposition rates on different test segments, and monitor pollutant removal associated with different test segments.

63) WATER POLLUTION ASPECTS OF STREET SURFACE CONTAMINANTS by Gail B. Boyd, and James D. Sarton, URS Research Company. EPA No. R2-72-081, NTIS No. PB 214-408. November 1972.

This study provides a basis for evaluating the significance of this source of water pollution relative to other pollution sources and provides information for municiplalities having a broad range of sizes, geographical locales, and public works practices. Information is developed for major land-use areas within cities. Runoff is analyzed for the following pollutants - BOD, COD, total and volatile solids, Kyeldahl nitrogen, nitrates, phosphates, and a range of pesticides and heavy metals.