CLEAN WATER

WATER POLLUTION CONTROL RESEARCH SERIES • 11023 FIX 08/70

Conceptual Engineering Report Kingman Lake Project

U.S. DEPARTMENT OF THE INTERIOR • FEDERAL WATER QUALITY ADMINISTRATION

WATER POLLUTION CONTROL RESEARCH SERIES

The Water Pollution Control Research Reports describe the results and progress in the control and abatement of pollution of our Nation's waters. They provide a central source of information on the research, development and demonstration activities of the Federal Water Quality Administration, Department of the Interior, through in-house research and grants and contracts with the Federal, State, and local agencies, research institutions, and industrial organizations.

Triplicate tear-out abstract cards are placed inside the back cover to facilitate information retrieval. Space is provided on the card for the user's accession number and for additional key words. The abstracts utilize the WRSIC system.

Water Pollution Control Research Reports will be distributed to requesters as supplies permit. Requests should be sent to the Project Reports System, Office of Research and Development, Department of the Interior, Federal Water Quality Administration, Washington, D.C. 20242.

Previously issued reports on the Storm and Combined Sewer Pollution Control Program:

11000 --- 01/70	Storm and Combined Sewer Demonstration Projects - January 1970
11020 FKI 01/70	Dissolved Air Flotation Treatment of Combined Sewer Overflows, (WP-20-17)
11024 DOK 02/70	Proposed Combined Sewer Control by Electrode Potential
11023 FDD 03/70	Rotary Vibratory Fine Screening of Combined Sewer Overflows, (DAST-5)
11024 DMS 05/70	Engineering Investigation of Sewer Overflow Problem - Roanoke, Virginia
11023 EVO 06/70	Microstraining and Disinfection of Combined Sewer Overflows
11024 --- 06/70	Combined Sewer Overflow Abatement Technology
11034 FKL 07/70	Storm Water Pollution from Urban Land Activity
11022 DMU 07/70	Combined Sewer Regulator Overflow Facilities
11020 --- 08/70	Combined Sewer Overflow Seminar Papers
11022 DMU 08/70	Combined Sewer Regulation and Management - A Manual of Practice
11023 FDB 09/70	Chemical Treatment of Combined Sewer Overflows
11024 FKJ 10/70	In-Sewer Fixed Screening of Combined Sewer Overflows
11024 --- 12/70	Urban Storm Runoff and Combined Sewer Overflow Pollution
11023 --- 08/70	Retention Basin Control of Combined Sewer Overflows

Continued on inside back cover....

Conceptual Engineering Report - Kingman Lake Project

by

ROY F. WESTON, INC.
Environmental Scientists and Engineers
West Chester, Pennsylvania

for the
FEDERAL WATER QUALITY ADMINISTRATION
DEPARTMENT OF THE INTERIOR

Program No. 11023 FIX
Contract No. 14-12-829
August 1970

For sale by the Superintendent of Documents, U. S. Government Printing Office
Washington, D.C., 20402 - Price $1.25

FWQA Review Notice

This report has been reviewed by the Federal Water Quality Administration and approved for publication. Approval does not signify that the contents necessarily reflect the views and policies of the Federal Water Quality Administration, nor does mention of trade names or commercial products constitute endorsement or recommendation for use.

ABSTRACT

This conceptual engineering study concerns the reclamation of combined sewer overflows and utilization of the reclaimed waters in a major water-oriented recreational facility for the District of Columbia. The investigation encompasses a comprehensive solution of environmental problems by proposing multi-use objectives and facilities.

Principal objectives of the project included: 1) evaluation of rainfall runoff relationships for sizing of storage and treatment plant capacities; 2) confirmation of treatment feasibility using filtration and an activated carbon process; and 3) development of sufficient data for preliminary design purposes.

Laboratory studies not only demonstrated process feasibility, but showed the need for including flocculation and sedimentation for removal of minute particles, together with chlorine and iodine addition for maximum disinfection. The recommended storage/treatment plan provides for a 175 million gallon storage basin, a 50 million-gallon-per-day reclamation facility and two 46-acre swimming and boating lakes.

Cost effectiveness (Cost/Benefit Ratio) of the project, as envisioned, has been indicated to be 1.6 at an estimated total project cost of $45,200,000, and an estimated annual operating cost of $1,777,000. Implementation of the proposed plan would not only provide a least-cost alternative over single-purpose projects to attain identical objectives, but would also reduce the annual pollution now discharged by the Northeast Boundary Trunk Sewer by approximately 99 percent.

This report was submitted in fulfillment of Program No. 11023 FIX under Contract No. 14-12-829 between the Federal Water Quality Adminstration and Roy F. Weston, Inc.

Key Words: Activated carbon, adsorption, combined sewers, District of Columbia, overflows, pollution abatement, precipitation (rainfall), recreation facilities, water storage, water reclamation.

CONTENTS

Section		Page
	ABSTRACT	iii
	CONTENTS	v
	FIGURES	vii
	TABLES	ix
	DRAWINGS	xi
I	CONCLUSIONS	1
II	RECOMMENDATIONS	5
III	INTRODUCTION	7
	General	7
	Project Objectives	7
IV	COMBINED SEWER OVERFLOW PROBLEM	9
	Data Needs	9
	Drainage Basin Description	9
	Description of the Northeast Boundary Trunk Sewer	9
	Investigation of Rainfall-Runoff Relationship	13
V	DEVELOPMENT OF ALTERNATIVES	29
	Criteria for Development of Alternatives	29
	Presentation of Alternatives	46
VI	CONCEPTUAL ENGINEERING DESIGN	49
	General Design Basis	49
	Soils Investigation	50
	Description of Proposed Facilities	55
VII	COST ESTIMATES	85
	Capital Costs	85
	Operating Costs	88
VIII	SELECTION AND COST EFFECTIVENESS OF APPROPRIATE ALTERNATIVE	91
	Selection of Storage Capacity and Reclamation Plant Capacity	91
	Cost Effectiveness of Project	91
	Summary of Cost Effectiveness	95
IX	ACKNOWLEDGMENTS	97
X	REFERENCES	99
XI	APPENDICES	101

FIGURES

Figure No.		Page
1	Hyetograph for Various Rainfall Frequencies	14
2	Standard Infiltration-Capacity Curves for Pervious Surfaces	15
3	Determination of Infiltration Offset - 5-year Rainfall Frequency - Pervious Residential Area	16
4	Determination of Point of Intersection of Infiltration Capacity and Precipitation Rate	17
5	24-Hour Overflow Volume versus Return Frequency - Northeast Boundary Sewer	18
6	Rainfall Intensity-Duration-Frequency Curves	20
7	24-Hour BOD Loading of Overflow versus Probability of Being Equalled or Exceeded Once in a Particular Year	30

TABLES

Table No.		Page
1	Zoning Classifications in Northeast Boundary Trunk Sewer Drainage Basin	10
2	Major Components of the Northeast Boundary Trunk Sewer	12
3	24-Hour Overflow Volume from Northeast Boundary Sewer for Various Return Frequencies and Total Rainfalls	19
4	Peak Flow Rates of Runoff from Northeast Boundary Trunk Sewer	21
5	Comparison of Characteristics of Combined Sewer Overflows and Storm Water Discharges	23
6	Precipitation Data, Washington International Airport	24
7	Average Annual Waste Loadings of Combined Sewer Overflow from Northeast Boundary Trunk Sewer	25
8	Recommended Limitations on Waste Loadings to Potomac River	26
9	BOD Loadings of Overflows from Northeast Boundary Trunk Sewer	27
10	Annual and Impact Reduction in BOD for Various Effective Storage Capacities and for Storms with Various Return Frequencies	32
11	Recommended Water Quality Criteria for Fishing-Boating Lake	38
12	Recommended Standards for Influent to Recreational Lakes	39
13	Available Swimming Areas and Maximum Allowable Number of Bathers for Various Design of Water Reclamation Facility	41
14	Probability During August-October of Two or More Storms Exceeding Reserve Storage Capacity	43
15	Alternative Construction Costs	85
16	Summary of Project Costs	86

TABLES
(continued)

Table No.		Page
17	Estimated Cost Summary - Tunnel Construction for Surcharge Relief and Storage	87
18	Comparable Mined Storage Costs	88
19	Alternative Annual Operating Costs	88
20	Summary of Annual Operating Costs 175 mgd Storage and 50 mgd Treatment Facility	89
21	Cost Effectiveness of Kingman Lake Storage and Treatment Alternatives	91
22	Construction Cost Estimates - Mined Storage vs. Kingman Lake Storage and Treatment	93
23	Summary of Cost Effectiveness of Selected Alternative	96

DRAWINGS

Drawing No.		Page
1	Northeast Boundary Sewer Drainage Basin	11
2	Water Reclamation and Recreation Facilities	56
3	Water Reclamation Facility - Plans and Elevations	57
4	Water Reclamation and Storage Facilities	58
5	Water Reclamation Facility	59
10	Plot Plan	60
11	Schematic Flow Diagram	61
12	Hydraulic Profile	62
101	Detail Process Flow Diagram - Influent and Storage Facilities	77
102	Detail Process Flow Diagram - Flocculation-Sedimentation-Sludge Handling	78
103	Detail Process Flow Diagram - Multi-Media Filtration	79
104	Detail Process Flow Diagram - Activated Carbon Adsorbers 1 through 8	80
105	Detail Process Flow Diagram - Activated Carbon Adsorbers 9 through 16 and Disinfection System	81
106	Detail Process Flow Diagram - Lake Area Distribution and Recycle Systems	82
107	Detail Process Flow Diagram - Carbon Regeneration System	83

SECTION I

CONCLUSIONS

It is the considered opinion of ROY F. WESTON that this project in its entirety is both technically and economically feasible. It is possible for the Federal Government to demonstrate that wastewater and waste land can be reclaimed for the use and advancement of society, and that a total environmental approach to the problem of pollution can be effective.

Combined Sewer Overflow

1. The project conceived as a result of the study would be the largest control and treatment works for combined sewer overflows in the United States and would elevate the effluent quality above all other existing or planned combined sewer overflow projects.

2. The Northeast Boundary Trunk Sewer serves approximately one third of the combined sewer area of the District of Columbia.

3. The methodology developed for this study provides a reasonably accurate definition of the quantity, quality, and variability of overflow from the Northeast Boundary Trunk Sewer.

4. The annual discharge of BOD_5 in the overflow from the Northeast Boundary Trunk Sewer accounts for over 25 percent of the recommended allowable waste loading to the Potomac River in the Washington metropolitan area. Even the storm that is expected to occur with a frequency of four times or more per year results in a BOD loading of over twice the recommended allowable daily loading for discharges from all waste treatment facilities in the metropolitan Washington area. The recent Potomac Enforcement Conference held 21 and 22 May 1970 required that these recommended allowable loadings be further reduced.

5. The impact of BOD loading in the overflow on dissolved oxygen levels is more serious than the 25 percent value reflects, due to the combined effect of long residence times of estuarine waters and the true form of overflows occurring at discrete impact loadings.

Storage Alternatives

6. Storage is an essential element of any plan for the abatement of pollution from the Northeast Boundary Trunk Sewer, because of the extremely high overflow rates.

7. Locating a surface storage basin in the vicinity of Kingman Lake is feasible and desirable since <u>all</u> overflow can be collected there without extensive modifications and without pumping, and also

because much of the area is undeveloped, indicating the release of open space for a storage basin is possible. The estimated cost for surface storage was $14.3 million as compared to $33.4 million for comparable mined storage.

8. Preliminary soils investigation indicates that the construction of a storage basin in the lower section of Kingman Lake is technically feasible.

9. The tunnel storage concept is applicable to the Northeast Boundary Trunk Sewer and has the decided advantage of providing surcharge relief of the existing sewer system.

Treatment Alternatives

10. Different levels of benefits are associated with each capacity of a wastewater reclamation facility; these include allowable bather load, probability of not overflowing the storage basin, and the additional storage capacity provided by the plant's operating during the period of the storm.

11. A literature evaluation disclosed that there are some promising alternatives to those unit processes investigated in this study; however, confirmation work is necessary before any one can be applied totally to the Kingman Lake Project. Included in this listing are fiberglass filtration media and microstraining for suspended solids removal, U-tube aerators for aeration, and ozonation for odor control and disinfection.

12. The use of iodine in conjunction with chlorine will provide effective disinfection of viruses as well as bacteria in the swimming lake.

13. The use of chlorine in the swimming lake will prevent excessive algae growth, but there may be an algae problem in the fishing-boating lake, which does not otherwise require chlorination.

14. The recommended standards for the influent to the swimming lake are: pH - 7.5 to 8.0; BOD - 5.0 mg/L; Suspended Solids - 15.0 mg/L; Total Phosphorus - 0.05 to 1.0 mg/L; Free Chlorine - 1.0 mg/L; Free Iodine - 1.0 mg/L; Fecal Coliform - 200 per 100 ml.

Laboratory Investigative Program

15. Coagulation-Sedimentation followed by multi-media filtration, activated carbon adsorption, and disinfection will produce an effluent which meets the water quality criteria objectives for swimming and fishing.

16. Filtration through fiberglass was shown to be an effective method for removal of suspended solids; however, significant development work is required prior to any major facility application.

Soils Investigation

17. Construction of a storage basin with vertical walls to a depth of minus 40 feet is feasible.

18. Construction of a storage basin with sloping side walls is undesirable because of the restrictions on side slopes, the period of construction, and the relatively small storage capacity available.

19. Construction cost estimates indicate that significant economics can be effected through use of the slurry wall construction method rather than the conventional approach using sheeting and bracing.

20. The foundations for all structures must extend to the sand and gravel layer or to the underlying stiff clay. For shallow structures, it will generally be most economic to provide pile foundations extending to these strata. The deeper structures can be founded directly on the above-mentioned strata or may be constructed on pile foundations.

21. Problems concerning general side grading, seepage, and other work associated with raising the fishing and swimming lakes to elevation +3.5 feet are not anticipated.

Selection of Alternative

22. The alternative scheme evaluated to have the highest cost effectiveness encompasses a storage basin capacity of 175 million gallons and a reclamation plant capacity of 50 million gallons per day.

23. The alternative scheme selected will provide:

    a. Ninety-nine percent reduction of annual pollution load from Northeast Boundary Trunk Sewer, eighty percent reduction of pollution from a storm with a two-year recurrence frequency, and sixty-one percent reduction of pollution from a storm with a five-year recurrence frequency.

    b. Effective storage capacity to contain a storm with a recurrence frequency of 1.2 years.

    c. A ninety-six percent probability that the reclamation facility will draw down the storage basin prior to the recurrence of a second storm overflow (the volume of which would exceed the remaining volume in the storage basin).

    d. Sufficient treatment plant capacity to support a maximum of 30,000 bathers per day in the swimming lake.

24. The covering of the storage basin with a parking roof is justified on the basis of comparable land acquisition and development costs and estimated annual revenues.

25. The total project cost estimate of $45,200,000 compares extremely well with benefits estimated at $72,755,000.

26. Operating costs are estimated to be $1,777,000 per year. Included in the operating costs are: administration, labor, maintenance, utilities, chemicals, make-up carbon, fuel oil, and an operating contingency.

SECTION II

RECOMMENDATIONS

1. Demonstrate how the treatment of combined sewer overflows can serve additional beneficial uses.

2. Demonstrate how the FEDERAL GOVERNMENT can approach the total solution to environmental problems.

3. Design and construct a 175,000,000-gallon storage facility, a 50,000,000-gallon per day water-reclamation facility, and the associated swimming, boating, fishing, and parking facilities.

4. Continue to investigate and gather additional data to refine this report and estimate prior to and during the engineering design and construction phases of this project.

5. Provide sufficient space within the water-reclamation plant and establish a field test facility to demonstrate new and promising processes for improving the treatment of combined sewer overflows.

SECTION III

INTRODUCTION

General

Recent efforts stimulated by the Federal Water Pollution Control Act, as amended, have brought to light the significance of combined sewer overflows as a source of pollution.

The overflows of combined sewers, however, involve other problems in addition to pollution. Surcharging of existing sewers and the resultant flooding of basements and underpasses are experienced in many cities. This occurs primarily because increase in per capita water usage, deterioration through age of existing sewer systems, and land use changes have decreased the capacity of combined sewers to convey storm water and have increased the proportion of rainfall that finds its way into the sewers.

In the District of Columbia, an area of approximately 20 square miles (one-third of the total area of the District) is served by combined sewers. The hydraulic capacity of the system is often exceeded during periods of precipitation, and raw sewage mixed with surface runoff is discharged to the Potomac River and its tributaries. This adds significantly to the polluted state of the Potomac River. An increased concern for the enhancement of water quality has stimulated interest in the abatement of pollution caused by combined sewer overflows; however, as brought out in a recent Federal Water Quality Administration-sponsored study (1), the abatement of pollution from combined sewers in Washington, D.C. will by no means be an inexpensive or expeditious project.

Pollution of the streams in the District detracts from their aesthetic values and prevents or interferes with intended water uses. The condition of the streams, however, is only one element in the overall environment. The social setting in Washington includes large numbers of people, whose standard of living is well below the accepted minimum. The proposed Comprehensive Plan (2) for Washington calls for creating an environment "...which helps to compensate for some of the things which deprived families are unable to provide for themselves". In this perspective, the plan identifies a strong need for outdoor recreation facilities to serve the city's residents.

Project Objectives

The drainage basin of the Northeast Boundary Trunk Sewer accounts for approximately one third of the area in Washington served by combined sewers. The size of this drainage basin and the documented frequency of overflow establish the significance of the pollution attributable to this combined sewer. The combined sewer discharges to the Anacostia River at a point just south of the Kingman Lake area, an area recognized

as having the potential to be developed as the city's major center for outdoor recreation. As a result of the Department of Interior's interest in abating pollution from this and other combined sewer overflow sources and also of its recognition of a need for additional environmental and recreational facilities for the people of Washington, D.C., the Federal Water Quality Administration requested that ROY F. WESTON investigate the feasibility of a multiple-purpose project combining the features of collection and treatment of combined sewer overflows and recreational development in the Kingman Lake area. The general scheme of the project is the collection and storage of combined sewer overflows from the Northeast Boundary Trunk Sewer in the lower section of Kingman Lake, followed by treatment of the overflows to a quality suitable for aquatic life propagation and for public bathing in the middle and upper sections of Kingman Lake.

Efforts of this investigation were directed generally towards the following:

1. Definition of the quantity, quality, and variability of combined sewer overflows from the Northeast Boundary Trunk Sewer, and evaluation of flow and characteristics data to determine required treatment and storage capacity.

2. Confirmation of the treatment method (high-rate filtration followed by activated carbon adsorption) previously recommended in the preliminary report entitled "Kingman Lake Recreational Area Project Presentation", prepared by ROY F. WESTON, 14 August 1969.

3. Development of sufficient topographic survey and soils information for use in preparing preliminary designs of the storage lake, in establishing foundation conditions for the treatment facility, and in determining the method for replacement of the bottom and selected shore areas of the upper section of the Lake with material suitable for bathing purposes.

4. Firm establishment of a cost basis for a multiple-purpose project to provide the needed recreational and pollution abatement facilities and for comparison of the costs of the proposed facilities with those of alternative projects producing the same end results.

SECTION IV

COMBINED SEWER OVERFLOW PROBLEM

Data Needs

The design of some of the facilities required in this project is dependent to a large degree upon rainfall and the resulting runoff. More specifically, the selection of the capacities of the storage facilities and of the water reclamation plant must rest, in part, on the following parameters: volume of overflow, peak flow rate, and contaminant loadings. Particular values of each of these parameters vary with each storm, and it is necessary to perform a hydrologic analysis to define the frequency and range of values. This type of information would provide a basis for evaluating the design alternatives. To perform a hydrologic analysis, extensive data are required concerning rainfall intensities and frequencies, characteristics of the drainage basin and of the existing sewer system, measurement of sewer flows, analysis of combined sewer overflow for significant contaminants, etc.

Drainage Basin Description

The drainage basin of the Northeast Boundary Trunk Sewer (Washington, D.C. Sewer District Number G-2), located in the northeastern portion of the District of Columbia, is composed of 4,066 acres of predominantly residential land, but there is some commercial, industrial and park land. In addition to the Northeast Boundary Trunk Sewer, several separate storm sewers which serve a 350-acre area and discharge directly into Kingman Lake must be considered in delineating the magnitude of the overflow problem. Table 1 is a listing of the various zoning classifications in the drainage basin and the percentages of total area associated with each classification. The elevations of this basin range from 0 feet near the Anacostia River to 310 feet above mean sea level in the northwestern portions (See Drawing No. 1). The basin generally drains southeasterly and easterly to the Anacostia River.

Description of the Northeast Boundary Trunk Sewer

Sections of the Northeast Boundary Trunk Sewer were built at various times between 1872 and 1939. Sewer configurations of the various component sections include circular, rectangular, and elliptical. Table 2 is a description of the major component sections of the sewer.

Only about 15 percent of the Northeast Boundary Trunk Sewer has the hydraulic capacity to convey the sanitary sewage and storm water flow from a 15-year return-frequency storm (3). Urban development since the initial construction period has been a major factor in increasing the quantity of storm water which runs off and consequently is largely responsible for the present hydraulic capacity deficiency of most of the trunk sewer. The District of Columbia, committed to relieving the surcharge condition in the Northeast Boundary Sewer (with its resultant flooding

Table 1

Zoning Classifications in Northeast Boundary
Trunk Sewer Drainage Basin

Type and Category		Percentage of Drainage Basin Area
Residential		69.1
R-1 (one-family, detached)	1.9	
R-2 (one-family, semi-detached)	1.3	
R-3 (row)	3.6	
R-4 (row converted to apartments)	44.2	
R-5 (general)	18.1	
Commercial		5.5
C-1 (neighborhood)	0.5	
C-2 (community center)	4.1	
C-3 (major center)	0.9	
C-4 (central business district)	0.0	
Manufacturing		13.1
C-M (light manufacturing)	9.5	
M (general industry)	3.6	
Park		12.3

Note: The zoning classification of the 350-acre area served by storm sewers discharging directly to Kingman Lake is as follows:

R-4	12%
R-5	16%
C-2	2%
Park	70%

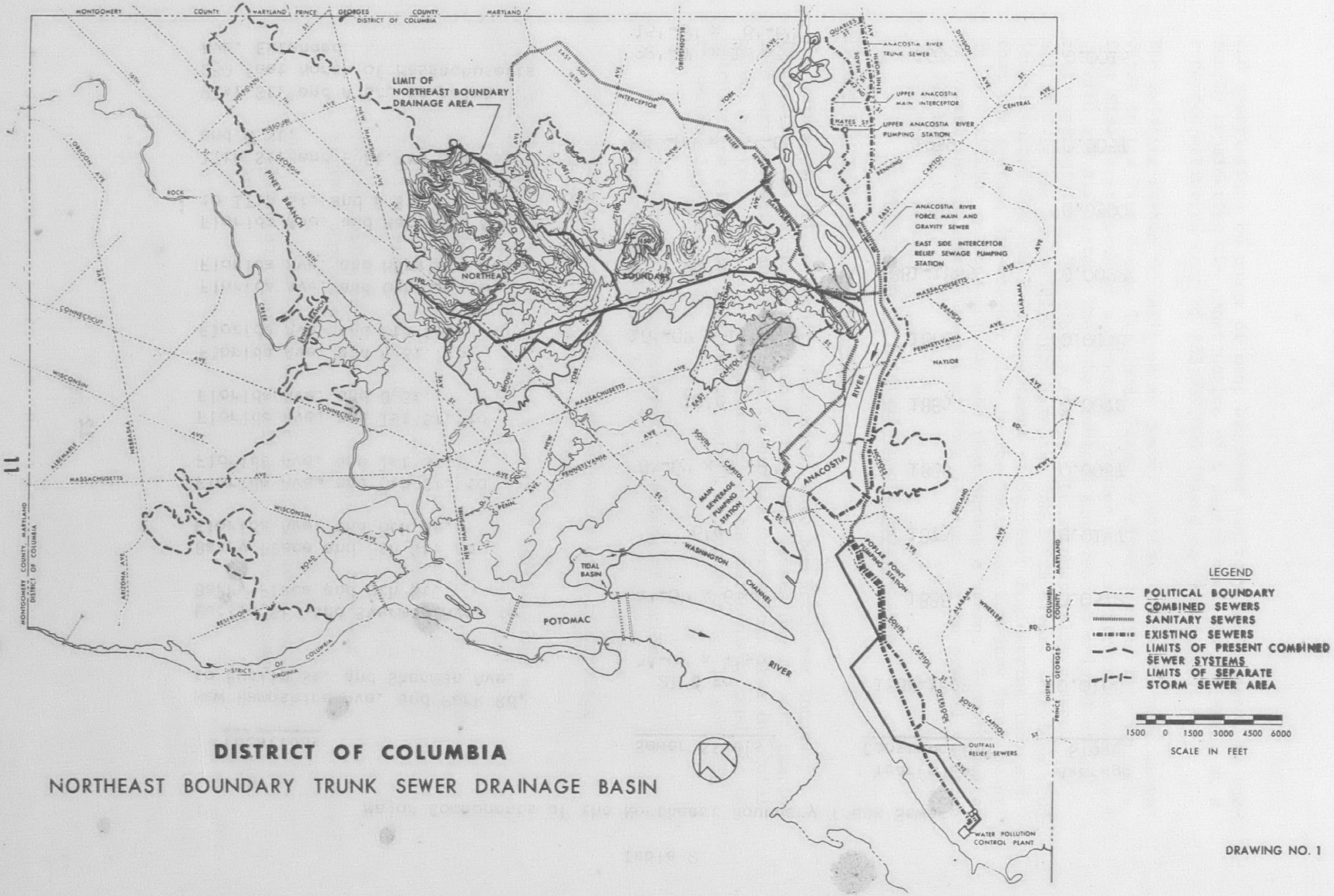

DISTRICT OF COLUMBIA

NORTHEAST BOUNDARY TRUNK SEWER DRAINAGE BASIN

DRAWING NO. 1

Table 2

Major Components of the Northeast Boundary Trunk Sewer

Locations	Sewer Size(s)	Year(s) of Construction	Average Slope
New Hampshire Ave. and Park Rd. to Euclid St. and Sherman Ave.	21"Ø to 3'-0" x 4'-6"	1888-1892	0.0168
Euclid St. and Sherman Ave. to Barry Place and 8th St.	4'-0" x 6'-0"	1888	0.0372
Barry Place and 8th St. to Florida Ave. and 8th St.	6'Ø	1873	0.0147
Florida Ave. and 8th St. to Florida Ave. and 1st St.	6'-6" x 9'-9"	1885	0.0057
Florida Ave. and 1st St. to Florida Ave. and O St.	10'Ø	1885	0.0072
Florida Ave. and O St. to Florida Ave. and 6th St.	16'-0" x 17'-6"	1886	0.0038
Florida Ave. and 6th St. to Florida Ave. and Maryland Ave.	20'Ø	1881-1885	0.0022
Florida Ave. and Maryland Ave. to 17th St. and E St.	22'Ø	1881	0.0300
17th St. and E St. to 21st St. and A St.	22'-0" x 23'-6"	1939	0.0057
21st St. and A St. to point 230 feet North of Massachusetts Ave. Extended	22'-0" x 18'-3" 15'-6" x 8'-6"	1935	0.0015

and restrictions on usage of many basement sanitary facilities), is currently considering the construction of a relief sewer in the area, at a reported estimated cost of $33,000,000 (based on 1969 costs).

The existing system is designed to convey sanitary waste and some storm water to the Blue Plains Treatment Plant by diverting the flow into the East Side Interceptor at a diversion station on 21st Street between East Capitol and A Streets. When the combined flow reaches a level of 9.5 feet (approximately 800 cfs), a sluice gate automatically closes, and all flow is discharged directly into the Anacostia River. Previous studies performed for the D.C. Department of Sanitary Engineering indicate that the average dry-weather flow in the Northeast Boundary Trunk Sewer is 27.4 million gallons per day and that during a recent 12-month period of normal rainfall this sewer overflows 57 times for an overall duration of 300 hours (3,4).

Investigation of Rainfall-Runoff Relationship

Volume of Overflow - Methodology

The volume of surface runoff of rainfall into the Northeast Boundary Trunk Sewer was calculated by subtracting the losses due to infiltration into pervious soils and retention in surface depressions from the total amount of precipitation. An explanation of the methodology used for the calculations of runoff is given in detail in Appendix D. In general, the methodology included:

1. Construction of hyetographs for storms of various frequencies (Figure 1).

2. Determinations of the relative percentages of pervious and impervious areas of the basin.

3. Determination of the relationship of infiltration capacity to time (Figure 2).

4. Construction of "accumulated mass rainfall curves" and "actual accumulated mass infiltration curves" and subsequent determination of rainfall in excess of infiltration (Figures 3 and 4).

5. Determination of the volume of rainfall retained in surface depressions.

6. Use of an area-depth correction factor to account for application of point-rainfall data to the drainage basin.

FIGURE 1

HYETOGRAPH FOR VARIOUS RAINFALL FREQUENCIES

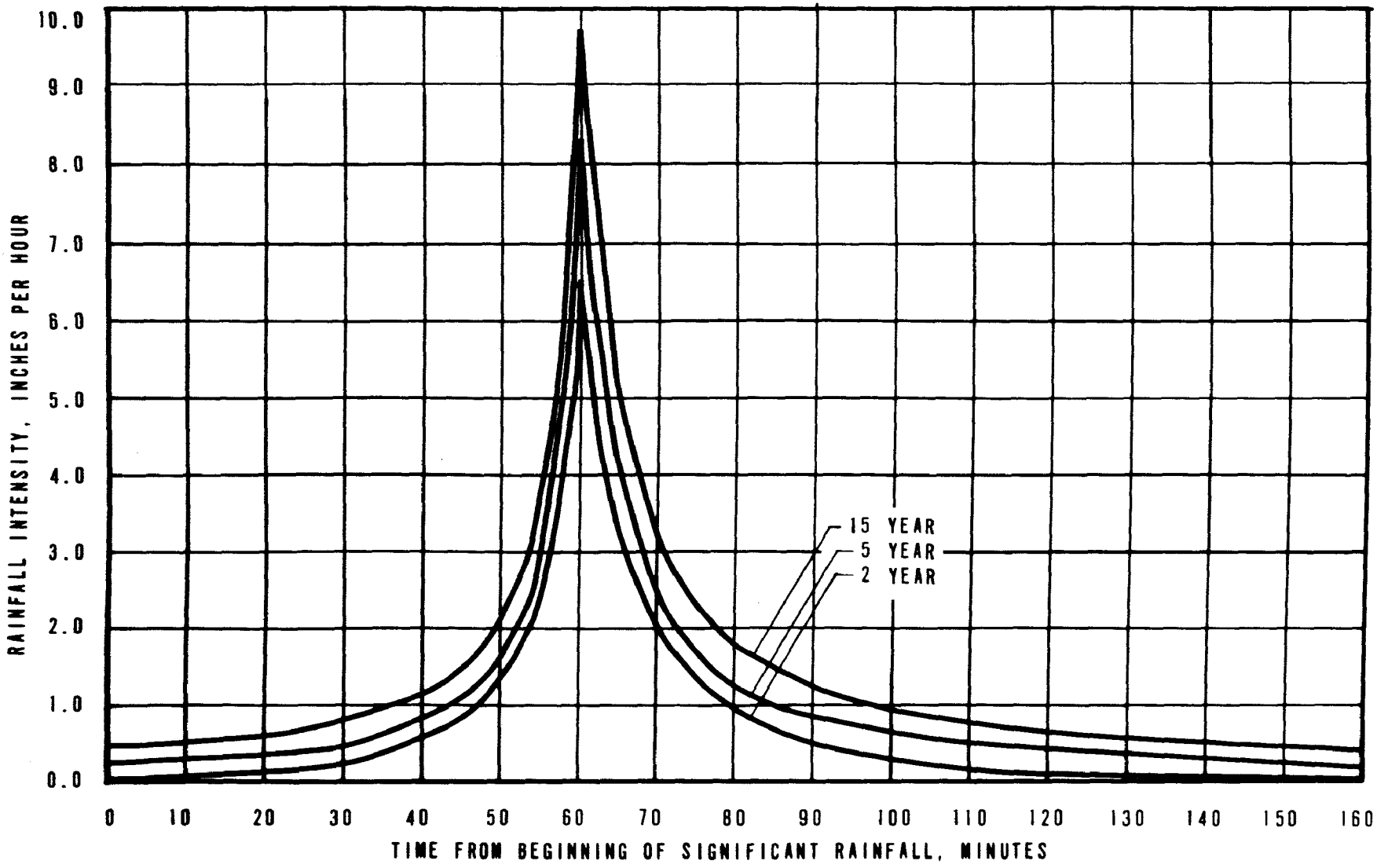

FIGURE 2
STANDARD INFILTRATION-CAPACITY CURVES FOR PERVIOUS SURFACES

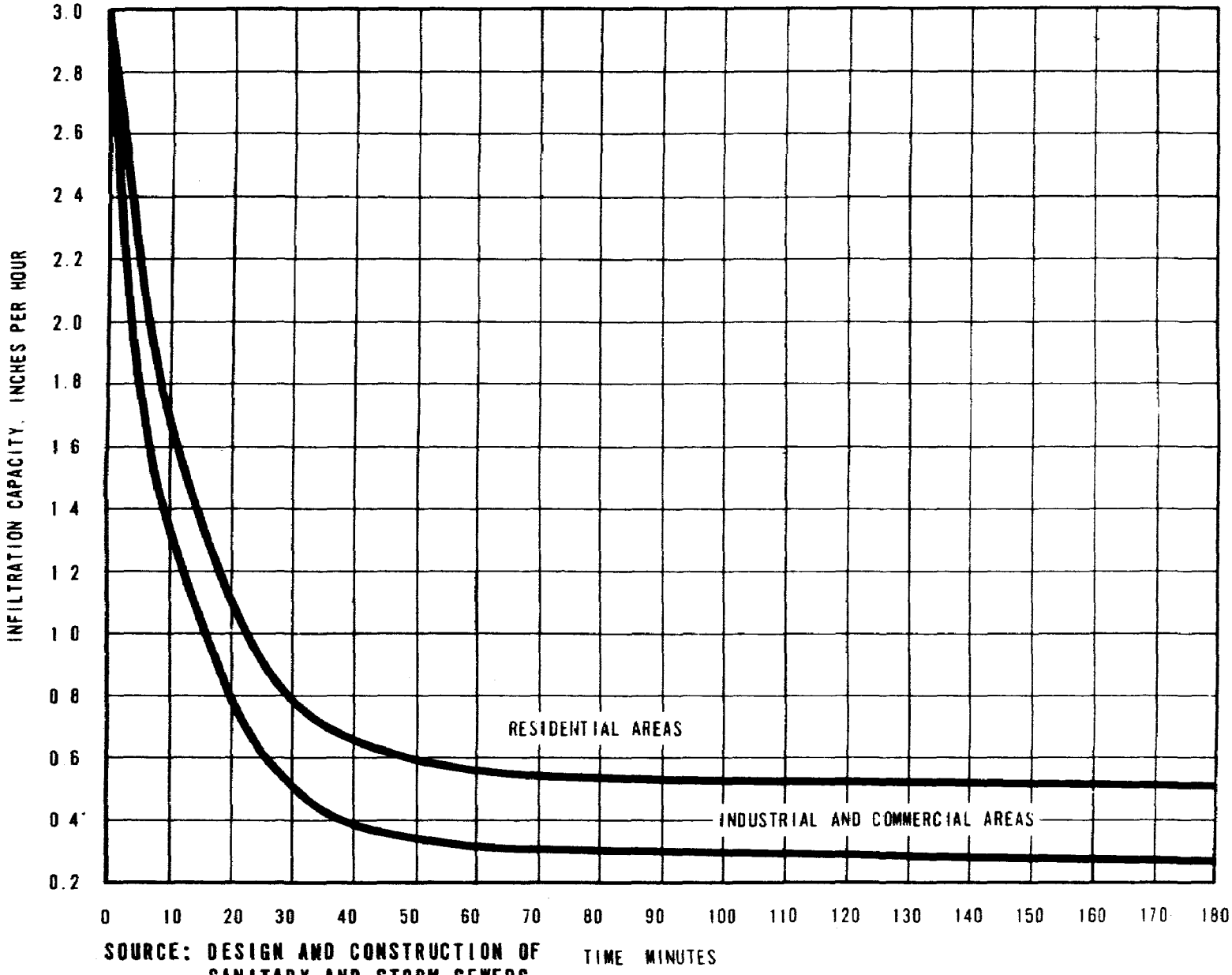

SOURCE: DESIGN AND CONSTRUCTION OF SANITARY AND STORM SEWERS ASCE, MOP NO. 37, NEW YORK, 1960.

FIGURE 3
DETERMINATION OF INFILTRATION OFFSET
5-YEAR RAINFALL FREQUENCY
PERVIOUS RESIDENTIAL AREA

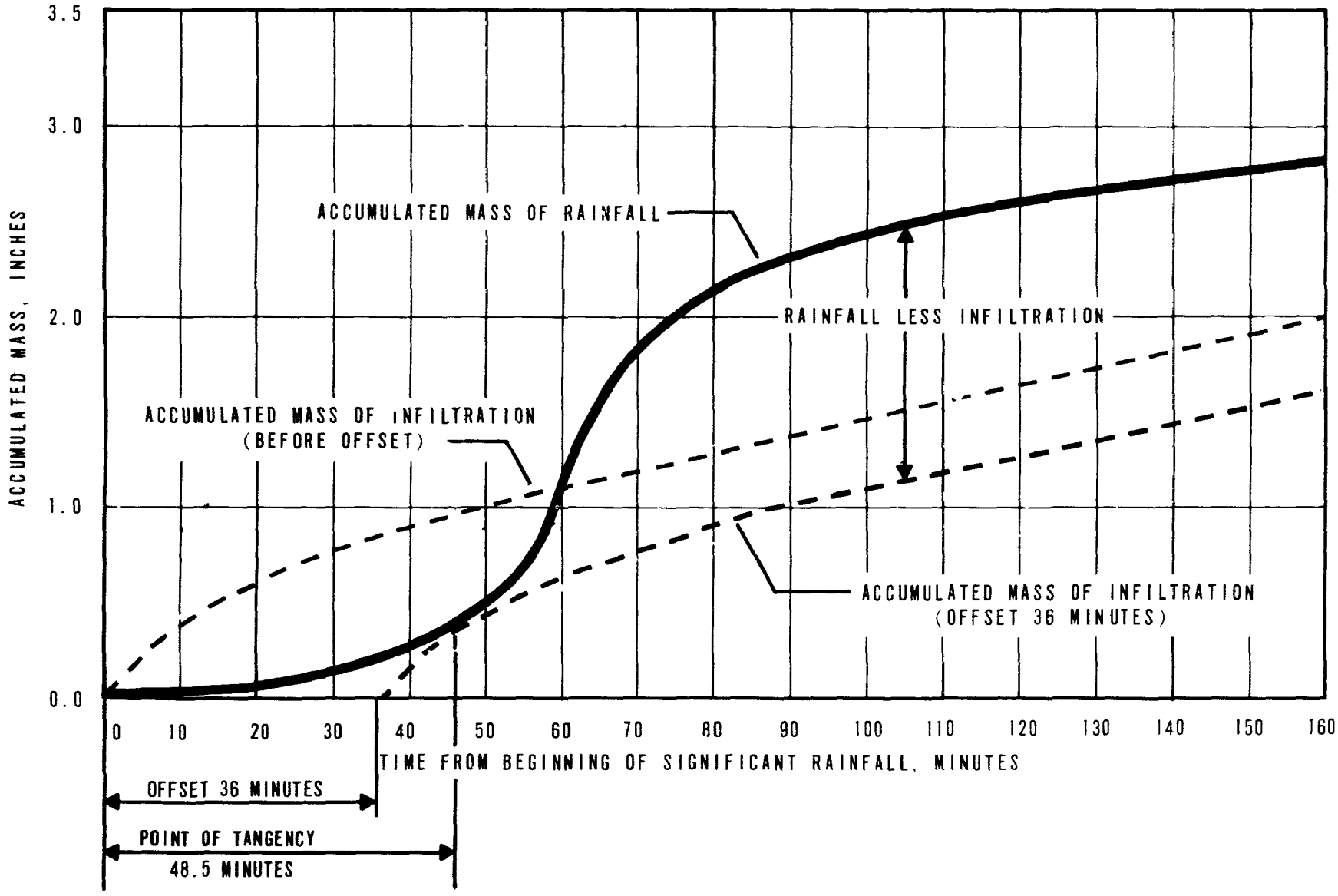

FIGURE 4
DETERMINATION OF POINT OF INTERSECTION OF INFILTRATION CAPACITY AND PRECIPITATION RATE 5-YEAR RAINFALL FREQUENCY PERVIOUS RESIDENTIAL AREA

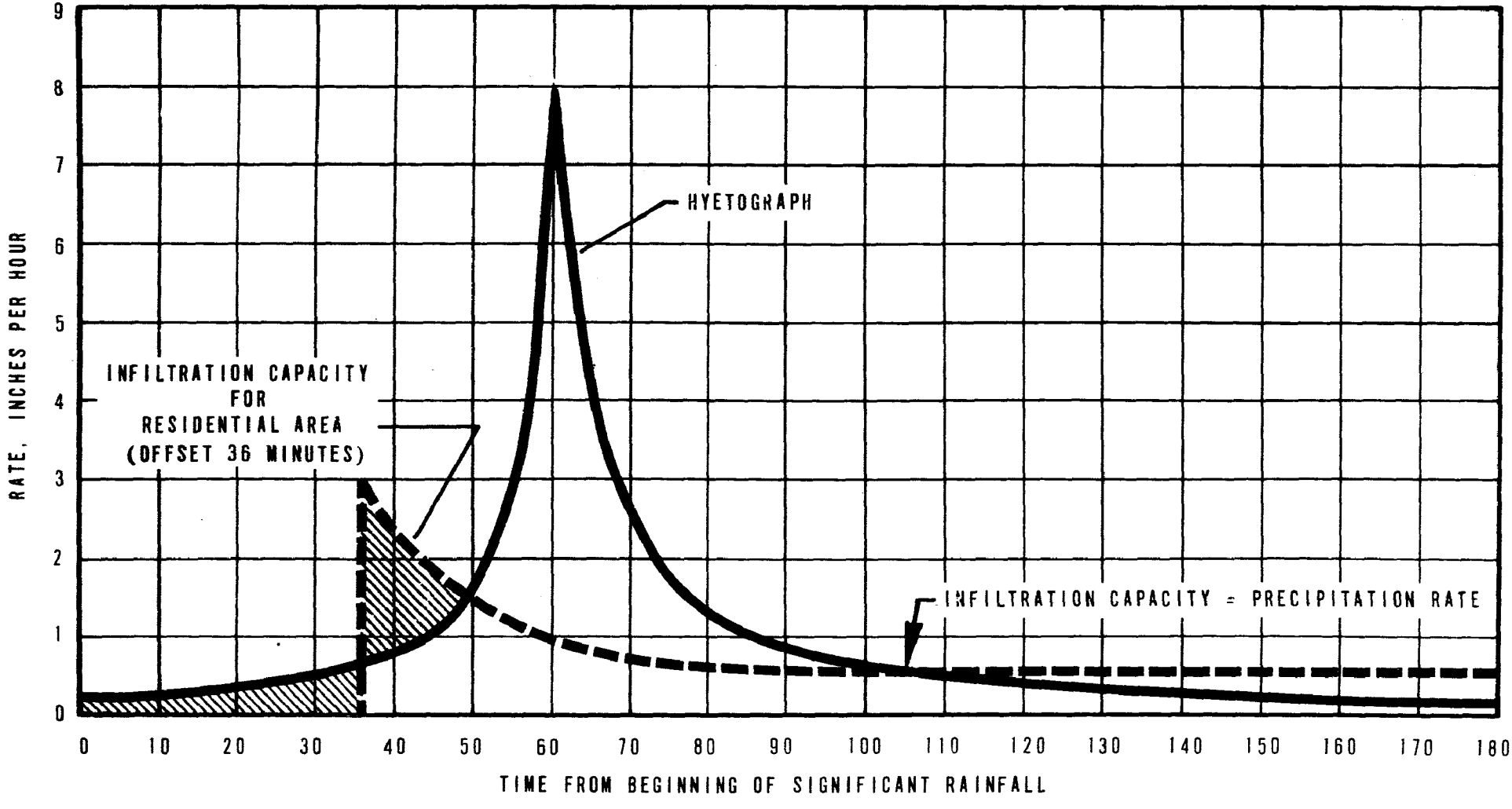

FIGURE 5
24-HOUR OVERFLOW VOLUME VERSUS RETURN FREQUENCY
NORTHEAST BOUNDARY SEWER

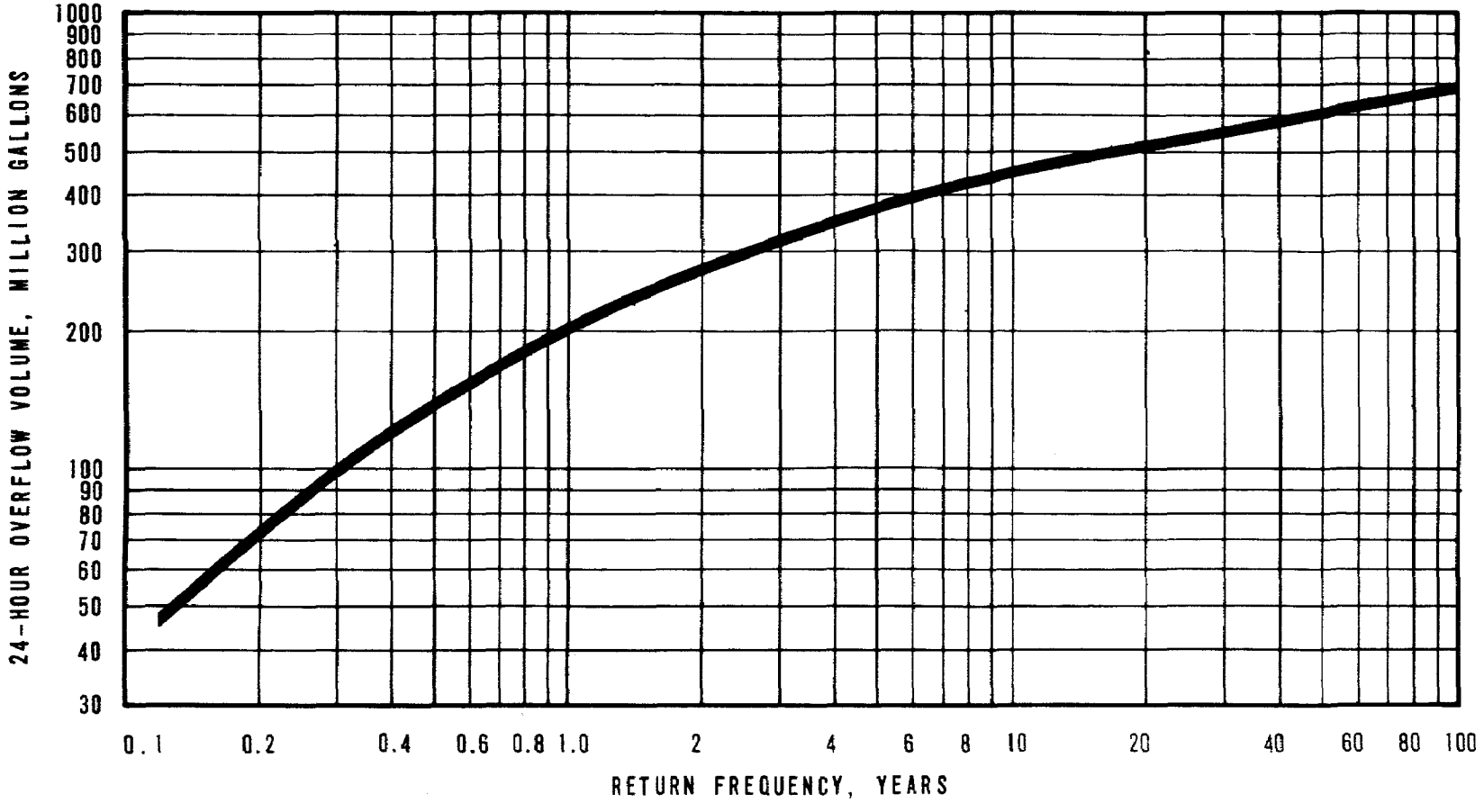

The calculated volume of runoff accounted for all runoff from pervious areas during the period of the storm when rainfall was in excess of infiltration capacity, and from impervious areas during the 24-hour period of extreme rainfall as read from the updated Washington, D.C. intensity-duration-frequency curves of Figure 5 (recorded values 1896-1897, 1899-1950, 1951-1969).

In addition to the Northeast Boundary Trunk Sewer, several separate storm sewers (See Drawing No. 1) which discharge directly into Kingman Lake must be considered in delineating the magnitude of the overflow problem. Since diversion of these sewers will be required for the development of Kingman Lake, the additional volume of runoff from these sewers has been established by the above method and included in the overall volume.

The total volume of overflow was determined by adding to the volume of runoff the volume of sanitary sewage which overflows into the Anacostia River when the sluice gates to the East Side Interceptor have closed. However, during the detailed engineering design, consideration will be given to installation of a controllable regulator to divert a portion of the flow, rather completely cutting off the flow to the East Side Interceptor.

Volume of Overflow - Results

The overflow volumes for a range of rainfall frequencies were determined using the discussed methodology. The results are shown graphically in Figure 6 and tabulated with the associated 24-hour rainfall in Table 3.

Table 3

24-Hour Overflow Volume
from Northeast Boundary Sewer[1]
for Various Return Frequencies and Total Rainfalls

Return Frequency	24-Hour Rainfall	Volume of Overflow
3 months	1.1 inches	87 million gallons
2 years	3.3 inches	275 million gallons
5 years	4.3 inches	374 million gallons
15 years	5.5 inches	486 million gallons
25 years	6.0 inches	557 million gallons

[1]Including small drainage basin adjacent to Kingman Lake.

Peak Flow Rates - Methodology

The rational method was utilized to determine the peak flow rate of runoff for a range of rainfall frequencies. The values of the variables in the rational equation were determined from information developed in previous studies as follows: Based on runoff coefficients used by the D.C. Department of Sanitary Engineering for various zonings, an overall runoff

FIGURE 6

RAINFALL INTENSITY-DURATION-FREQUENCY CURVES

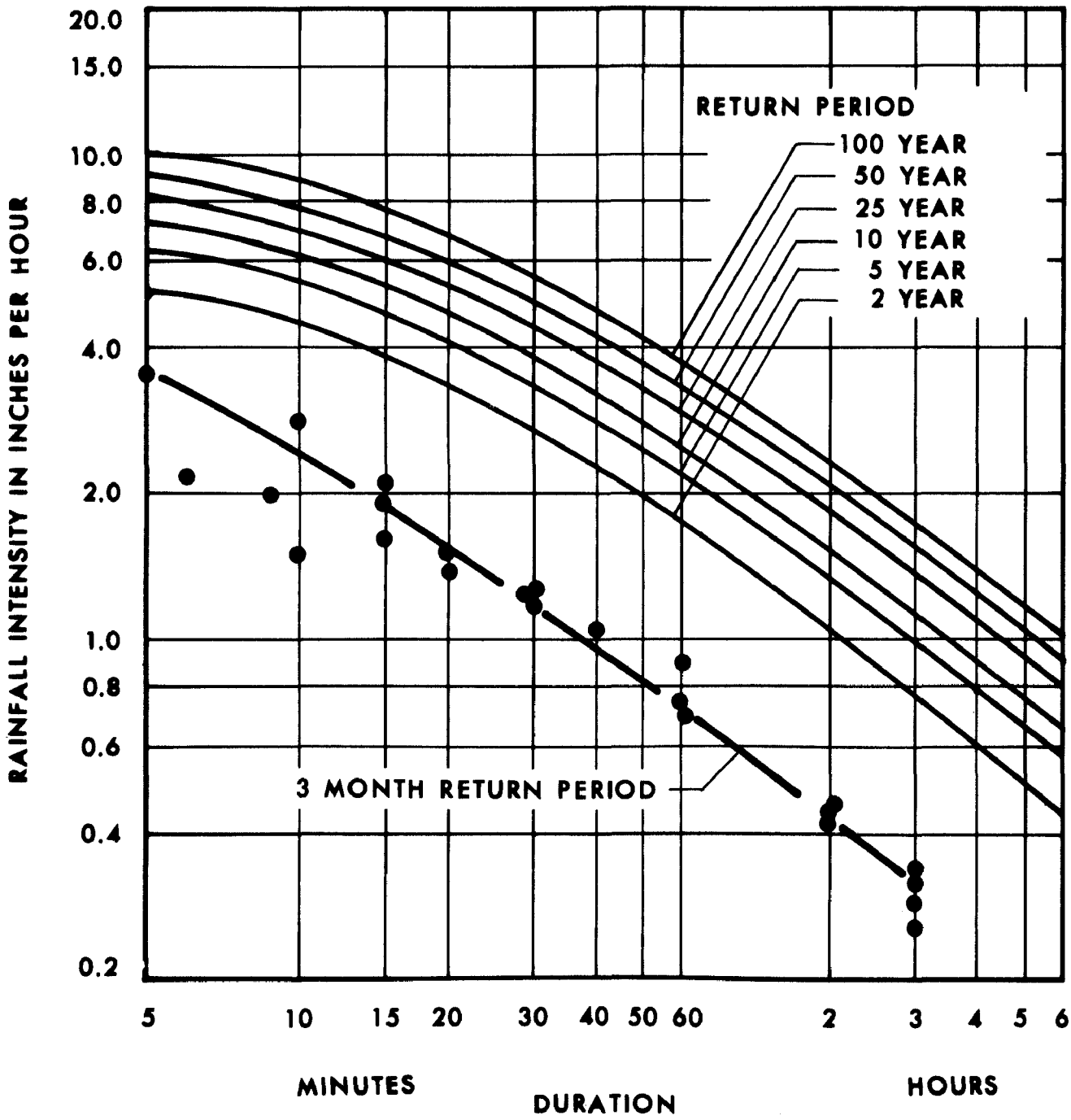

THESE LINES REPRESENT AN EXTREME VALUE ANALYSIS, AFTER GUMBEL, ADJUSTED TO THE EQUIVALENT OF THE ANALYSIS OF A PARTIAL-DURATION SERIES (SEE WEATHER BUREAU TECHNICAL PAPER NO. 40. "RAINFALL FREQUENCY ATLAS OF THE UNITED STATES.")

coefficient of 0.72 was determined to be representative of the entire drainage basin. An engineering study (3) on a proposed relief sewer determined that the area of the drainage basin is 4,066 acres and that the time of concentration is 52 minutes. The average intensity for the 52-minute period of extreme rainfall of each return frequency of interest was determined from the intensity-duration-frequency curves utilized by the D.C. Department of Sanitary Engineering (See Figure 6).

Peak Flow Rates - Results

Results of the peak runoff are listed in Table 4. These peak rates of runoff are extremely high, and they would occur in the sewer only if the hydraulic capacity of the Northeast Boundary Trunk Sewer was sufficient to convey them. In actuality, the maximum hydraulic capacity of the Northeast Boundary Trunk Sewer at the point of diversion to the three overflow tubes is 3,320 cfs, which corresponds to the 0.6-year frequency storm. Therefore, for the present design of the sewer system, the relative difference in peak runoff among the more intense storms is not pertinent.

Table 4

Peak Flow Rates of Runoff from
Northeast Boundary Trunk Sewer

Return Frequency	Average Intensity	Peak Flow Rate
3 months	0.63 in./hr.	1,750 cfs
2 years	1.90 in./hr.	5,550 cfs
5 years	2.34 in./hr.	6,850 cfs
15 years	2.90 in./hr.	8,460 cfs
25 years	3.15 in./hr.	9,200 cfs

Combined Sewage Contaminant Loadings

The waste constituents in the overflow from the Northeast Boundary Trunk Sewer have never been analyzed as part of any extensive monitoring program; and quantitative sampling was not within the scope of this 21-week study. However, overflows from other combined sewers and from some separate sewers in the District have been monitored in previous studies (5). ROY F. WESTON operated monitoring systems on two combined sewers and one separate storm sewer during a 6-month period in the spring and summer of 1969. Flow measurements were made, and a considerable number of the samples of dry-weather flow and storm flow were taken and analyzed for a number of characteristics.

Several storms of varying intensities and durations were monitored in that six-month period. The results showed that concentrations of waste constituents vary considerably throughout the duration of runoff and tend to increase proportionally with the runoff flow rate during the initial flushing period. The duration and intensity of the storm producing the runoff had some effect on the concentrations. The observed

range and mean value of each of the waste constituents of combined sewer overflows and storm water discharges are presented in Table 5. The storms from which the mean values were determined are representative of the storms accounting for most of the annual rainfall, and the drainage basins of the sewers monitored are very similar in development and topography to the drainage basin of the Northeast Boundary Trunk Sewer. Therefore, the mean values should be applicable to this study, but only with careful interpretation.

The mean annual rainfall in the Washington, D.C. area, as reported by the U. S. Weather Bureau, is 40.8 inches (See Table 6). By comparing the volume of overflow with total rainfall for the storm frequencies analyzed, and by taking into account that 57.8 percent of the Northeast Boundary Trunk Sewer drainage basin and 80 percent of the drainage basin adjacent to Kingman Lake are impervious, it is reasonable to assume that the annual volume of overflow is equal to 60 percent of the annual rainfall. This suggests that the mean annual volume of combined sewage overflow from the two drainage basins is approximately 3 billion gallons. The mean annual waste loadings of the combined sewer overflow to the estuary were determined by applying the average waste concentrations listed in Table 5. The annual waste loadings thus calculated are presented in Table 7.

The Potomac Estuary is polluted and continues to experience problems with low dissolved oxygen, excessive algal growths, sediments, and high concentrations of fecal bacteria. All of these problems are complicated by combined sewers. Although combined sewer overflow adds to the sediment load, the primary source of sediment is the heavy silt load included in the runoff from areas with significant agricultural and construction activity. The impact of combined sewer overflows is reflected in the problems of low dissolved oxygen and high concentrations of fecal bacteria, and possibly in the excessive algal growth problem. To improve dissolved oxygen levels, it was recommended by the conferees of the May 8, 1969 conference on pollution of the Potomac River that loadings from existing waste treatment facilities discharging into the Potomac River between River Mile 106 and River Mile 91 (Washington metropolitan area) be limited to the values listed in Table 8. Comparison of the average annual waste loading data of Table 7 with recommended annual load limitations developed from Table 8 (by multiplying by 365) indicates that the Northeast Boundary Trunk Sewer accounts for approximately 28 percent of the BOD, 9 percent of the phosphorus, and 3 percent of the nitrogen, in the allowable limits recommended for all wastewater treatment plant discharges in the area. These percentage values are significant, and their impact is increased by the circumstance that the discharges from the Northeast Boundary Trunk Sewer occur as discrete shock loadings rather than as continuous discharges. Consideration must also be given to the remaining combined sewer overflow load and other storm water pollution loads from the District of Columbia metropolitan area.

The latest Potomac Enforcement Conference conducted May 21 and 22, 1970 recommended that significantly higher standards be established for this portion of the River, thus giving even more significance to pollution emanating from combined sewer overflows.

Table 5

Comparison of Characteristics of
Combined Sewer Overflows and
Storm Water Discharges

Waste Constituents[1]	Combined Sewage		Separate Storm Flow	
	Range	Mean	Range	Mean
Chemical Oxygen Demand	80 - 1,760	382	29 - 1,514[4]	335[4]
Biochemical Oxygen Demand	10 - 470	71	3 90[4]	19[4]
Total Solids	120 - 2,900	883	338 - 14,600	2,166
Total Volatile Solids	40 - 1,500	344	12 - 1,004	302
Suspended Solids	35 - 2,000	622	130 - 11,280	1,697
Volatile Suspended Solids	10 - 1,280	245	0 - 880	145
Settleable Solids	0 - 1,308	229	0 - 7,640	687
Total Phosphate	0.8 - 9.4	3.0	0.2 - 4.5	1.3
Total Nitrogen	1.0 - 16.5	3.5	0.5 - 6.5	2.1
Orthophosphate	0.1 - 5.0	2.0	-	--
Ammonia Nitrogen	0 - 4.7	1.5	-	--
pH[2]	5.6 - 6.7	6.3	7.2 - 6.0	6.5
Total Coliform[3]	420,000 - 5,800,000	2,800,000	120,000 - 3,200,000	600,000
Fecal Coliform[3]	240,000 - 5,040,000	2,400,000	40,000 - 1,300,000	310,000
Fecal Streptococcus[3]	1,000 - 49,000	17,200	3,000 60,000	21,000

[1] mg/L unless otherwise noted.

[2] pH units.

[3] Counts per 100 ml.

[4] Excluding sample from June 8 storm, which had a BOD concentration of 660 mg/L.

Table 6

Precipitation Data
Washington National Airport
Washington, D.C.

Month	Precipitation		
	Normal Monthly Total inches	Maximum in 24-hours inches	Year of Occurrence
January	3.03	1.73	1948
February	2.47	1.63	1961
March	3.21	3.43	1958
April	3.15	1.77	1948
May	4.14	4.32	1953
June	3.21	3.67	1947
July	4.15	2.97	1952
August	4.90	6.39	1955
September	3.83	4.15	1966
October	3.07	4.98	1955
November	2.84	2.60	1963
December	2.78	1.85	1951
TOTAL ANNUAL	40.78		

Source: Local Climatological Data. Annual Summary with Comparative Data, 1968. Washington, D.C. U.S. Department of Commerce, ESSA.

Table 7

Average Annual Waste Loadings of Combined Sewer Overflow from Northeast Boundary Trunk Sewer[1]

Pollutants	Pollutant Loading million pounds/year	Recommended Standards[2] million pounds/year
Chemical Oxygen Demand	9.6	
Biochemical Oxygen Demand	1.7	6.02
Total Solids	22.1	
Total Volatile Solids	8.6	
Suspended Solids	15.6	
Volatile Suspended Solids	6.1	
Settleable Solids	5.7	
Total Phosphate	0.075	0.88
Total Nitrogen	0.088	2.9
Orthophosphate	0.050	
Ammonia Nitrogen	0.038	

[1]Including small drainage basin adjacent to Kingman Lake.
[2]Calculated from Table 8.

Table 8

Recommended Limitations on Waste Loadings
to Potomac River

Facility	lbs/day BOD5	Total Phosphorus	Total Nitrogen
Pentagon	300	20	145
Arlington	1,300	60	650
District of Columbia	12,700	560	6,130
Alexandria	1,300	60	630
Fairfax Westgate	900	40	445
	16,500	740	8,000

Source: "Proceedings-Third Session of Conference in the Matter of Pollution of the Interstate Waters of the Potomac River, April 2-4, May 8, 1969, Washington, D.C.", FWQA.

It is of special interest to define the magnitude and variability of BOD loadings of the overflow from the Northeast Boundary Trunk Sewer. Table 5 indicates that the concentration of the BOD in combined sewage ranges from 10 mg/L to 470 mg/L and has a mean of 71 mg/L. The sources of BOD in combined sewer overflow are the organic wastes contained in storm runoff from the urban area, the sanitary sewage mixed with the runoff, and the initial flushing action on the ground surface and in the catch basins and sewers.

Sufficient information is available from the previous ROY F. WESTON study to identify the relative significance of these sources for several storms. If the runoff has a BOD concentration of 19 mg/L, and the duration and time of the storm are correlated with the diurnal characteristics of the dry-weather flow in the sampled sewer, the BOD loadings due to runoff and sanitary sewage can be accounted for. The effect of flushing accounts for the remaining BOD, and it can be correlated to drainage area (implying a specific length of sewer lines) and to the length of dry-weather period between storms. For average dry-weather conditions, the data developed in the previous study indicated that the flushing action results in a BOD loading of 3 pounds per acre of drainage area.

These values provide a basis for determining the BOD loading of the overflow from the Northeast Boundary Trunk Sewer for a range of rainfall frequencies. The BOD concentration of the runoff is assumed to be the 19 mg/L as indicated in the earlier WESTON study, the BOD concentration of sanitary sewage is assumed to be the typical value of 200 mg/L, and the BOD loading due to flushing is assumed to be 3 lbs/acre as determined for similar basins. The results are listed in Table 9.

Table 9

BOD Loadings of Overflows from Northeast Boundary Trunk Sewer[1]

Rainfall Frequency	BOD Loading
3 months	35,600 pounds
2 years	72,700 pounds
5 years	88,400 pounds
15 years	106,000 pounds
25 years	117,400 pounds

[1]Including small drainage basin adjacent to Kingman Lake.

From this table (which includes the effects of the small drainage basin adjacent to Kingman Lake) and related flow data, the mean BOD concentration of the overflow from the 3-month storm is calculated to be 50 mg/L, which compares favorably with the reported mean of 71 mg/L of BOD for the combined sewer overflow sampled in the previous study. Note that even the 3-month storm results in a BOD loading of over twice the recommended daily loading for discharges from all waste treatment facilities in the Washington, D.C. area.

The methodology of separately accounting for the three sources of BOD in combined sewer overflow can be extended to determine annual BOD loading. With this method, the annual BOD loading is 1.6 million pounds, which checks very closely with the 1.7 million pounds determined by simply multiplying annual overflow volume by the mean BOD concentration (in combined sewer overflow) of 71 mg/L.

The maximum precipitation in the Washington area for a 24-hour period was 7.31 inches and occurred on August 11-12, 1938 (6). It is estimated by graphical interpretation that such a storm would result in an overflow of 680 million gallons. The maximum precipitation for a 48-hour period and for a 72-hour period are the same, 8.67 inches, and also occurred in August 11-12, 1938. The additional rainfall of 1.36 inches would have resulted in an additional overflow of approximately 120 million gallons. Thus, during the three-day period of maximum precipitation, approximately 800 million gallons are estimated to have overflowed from the combined sewers.

Verification of Results

As previously stated, the volume of overflow and concentration of pollutants in the overflow from the Northeast Boundary Trunk Sewer have never actually been measured as part of an extensive sampling and monitoring program; therefore, it was not possible to verify the results of this study with past observations of the actual area. In developing data concerning the combined sewer overflow certain phenomena, e.g. infiltration

and surface depression storage, were applied to the Northeast Boundary Trunk Sewer drainage basin even though they were based on observations made for other drainage basins, both in Washington, D.C. and other cities. These applications are reasonable, and the possibility for significant errors in the results appears to be remote. For example, if the difference between the actual infiltration capacity and the assumed infiltration capacity is as much as 33 percent, the change in total volume of overflow is only about 15 million gallons for the 2-year storm and 30 million gallons for the 25-year storm. The error associated with a 33 percent difference in volume of surface depression is only about 3 million gallons.

It should be noted that, as a part of this study, an indicating-recording liquid-level gauge has been installed by ROY F. WESTON, with the assistance of the D.C. Department of Sanitary Engineering, near the point of overflow in the Northeast Boundary Trunk Sewer, and future readings from this gauge should provide some basis for verification of the calculated results.

Also, during the performance of this study ROY F. WESTON provided information concerning hydraulic characteristics of the sewer, the drainage basin, rainfall, etc. to Metcalf and Eddy Engineers, Water Resources Engineers, and the University of Florida, who have been retained by the FWQA to apply a mathematical model to the Northeast Boundary Trunk Sewer. The results of this mathematical simulation study should provide information concerning overflow and pollutant concentrations and verification of suspected surcharge areas for various storm events. The mathematical model should also be able to predict the impact of the Northeast Boundary Trunk Sewer overflow on the water quality of the Potomac Estuary.

SECTION V

DEVELOPMENT OF ALTERNATIVES

Criteria for Development of Alternatives

The problem definition phase of this study has defined the frequency and range of values of the principal design parameters. From this, it is possible to develop numerous alternative strategies for collecting, storing, and treating overflow, each alternative providing a different level of benefits in such areas as enhancement of water quality, increase in the number of bathers allowed at a swimming facility, decrease in frequency of surcharging of sewers, more parking space, etc.

To provide a sound basis for decision making, it is necessary to develop a sufficient number of promising alternatives to offer a wide and reasonable choice, and then to define consequences of each in detailed and comparative terms so that cost-benefit relationships can be identified and evaluated.

Impact on Water Quality

The problem of low dissolved oxygen levels in the Potomac is interstate in scope, and requires a regional approach to any solution. The impact and risk of various BOD loadings from combined sewer overflows must be evaluated not just as an annual or average daily loading, but also in its true form as shock loadings. This form, combined with the long residence times of estuarine waters, explains the particularly serious impact combined sewer overflows have on water quality.

Storage is an essential element of any plan for the abatement of pollution from the Northeast Boundary Trunk Sewer. Since any retained overflow is to be treated, the quantity of collected overflow represents a practical measurement of the reduction in pollution. Figure 7 illustrates, for a range of storage capacities, the 24-hour BOD loadings versus the probability of being equalled or exceeded once in a particular year. Since the overflow is to be collected over a 24-hour period, the term "effective storage capacity" has been selected to denote the total of the capacity of the storage basin plus one day's capacity of the water reclamation facility. In making these calculations, it was assumed the percentage reduction in BOD is equal to the percentage of the total overflow collected.

To illustrate, the bar in Figure 7 represents the consequences of a 5-year frequency storm. With no storage (i.e., no collection of combined sewer overflow) this storm would generate a 24-hour BOD loading to the surface waters equal to or exceeding 90,000 pounds. In contrast, with an effective storage capacity of 200,000,000 gallons, the 5-year storm would result in a 24-hour BOD loading to the rivers of 42,000 pounds or more. Whereas the overall reduction in organic pollution from this 5-year frequency storm would be approximately 50,000 pounds

FIGURE 7

24 HR. BOD LOADING OF OVERFLOW VERSUS PROBABILITY OF BEING EQUALED OR EXCEEDED ONCE IN A PARTICULAR YEAR

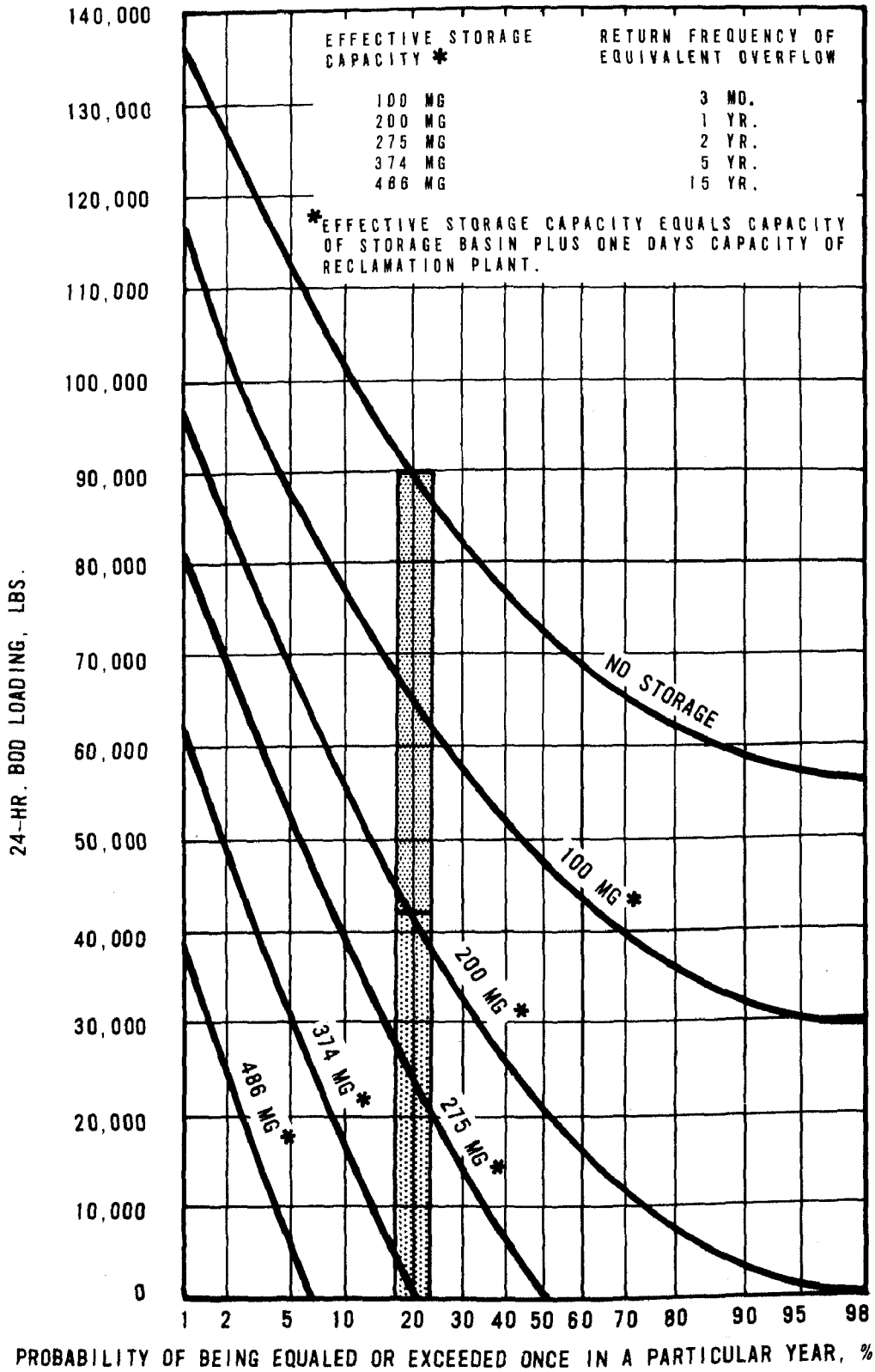

(or 56 percent of the storm loading), the amount of organics which would be bypassed is two and a half times the maximum allowable daily loading recommended for all discharges in the area.

Since the reduction in pollution is effected by collection of storm and combined sewer overflows and subsequent treatment, the degree of reduction of all constituents (including BOD) can be estimated with reasonable accuracy as a function of the volume of wastewater collected.

The annual BOD loading associated with any given storage capacity can be determined from Figure 7 by either of two methods:

Method A

1. Convert the appropriate cumulative distribution function (curve) in Figure 7 to reflect less than or equal probabilities, rather than the greater than or equal probabilities depicted.

2. Develop a probability function from the new cumulative distribution function.

3. Integrate the following formula

$$E(x) = \int_0^\infty x\, f(x)\, dx$$

where:

$E(x)$ = expected annual BOD loading
x = BOD loading from storm
$f(x)$ = probability function

Method B

1. Plot the appropriate cumulative distribution function (curve) in Figure 7 on arithmetic graph paper.

2. Determine the area beneath this curve.

3. This area is equal to x-f(x), or the expected annual loading of BOD.

Table 10 illustrates the overall annual reduction in organic pollution which would be obtained for various effective storage capacities and the percentage reduction in impact pollution loading for single occurrences of storms of various frequencies. For example, an effective storage capacity equal to the overflow from a one-year storm (225 million gallons) reduces the expected annual BOD loading by 99 percent (from 1,700,000 pounds to 26,000 pounds).

Table 10

Annual and Impact Reduction in BOD
for Various Effective Storage Capacities and for
Storms with Various Return Frequencies

	Effective Storage Capacity in millions of gallons					
	0	115	225	285	374	486
Annual Reduction in Pollutant Loading	0	96%	99%	99+%	99+%	99+%
Impact Reduction for Single Storm Occurrence						
3-Mo. Storm	0	100%	100%	100%	100%	100%
1-Yr. Storm	0	49%	100%	100%	100%	100%
2-Yr. Storm	0	39%	80%	100%	100%	100%
5-Yr. Storm	0	31%	61%	73%	100%	100%
15-Yr. Storm	0	23%	46%	56%	78%	100%
Extent of Recommended* Allowable Load Remaining						
After 3-Mo. Storm	216%	0	0	0	0	0
After 1-Yr. Storm	346%	176%	0	0	0	0
After 2-Yr. Storm	432%	289%	94%	0	0	0
After 5-Yr. Storm	545%	376%	218%	145%	0	0
After 15-Yr. Storm	654%	504%	352%	291%	145%	0
Average Number of Overflows per Year	--	3.3	1	0.5	0.2	0.07

*Recommended daily loadings for Potomac River between River Mile 91 and River Mile 106 by the conferees of the 1969 Conference on Pollution of the Potomac River. See Table 8.

The number of overflows from the Northeast Boundary Trunk Sewer into the Anacostia River has been estimated to be approximately 60 per year. Table 10 also indicates the average number of overflows to the river which would be expected with various effective storage capacities.

Wastewater Storage Considerations

A shortage of land as well as a common objective to enhance the beauty of Washington limit the application of surface storage. An exposed, open-storage structure is hardly acceptable in the established, low-density residential areas. Nor would it be consistent to displace low-income families residing in areas programmed for rehabilitation when a critical shortage of low-cost housing already exists and racial barriers interfere many times with relocating in adjacent suburbs. Also, Washington has the image of being a city of parks, and its comprehensive plan provides that this system of open space be extended and elaborated even further. Although an uncovered or exposed structure is generally unacceptable, the use of subsurface space just below open areas is promising, especially if the cover over the storage structure has a joint purpose, e.g. parking, recreation, etc.

Engineering considerations involved in locating storage facilities are soil characteristics and the requirements for collection of combined sewer overflows. It is desirable that a facility be located at such an elevation to permit collection of combined sewer overflow by gravity; otherwise, matching the peak overflow rate would demand exceptionally large pumping capacity. It is also desirable to locate storage facilities in the vicinity of the point of overflow to avoid both extensive modification to the sewer and the construction of a lengthy diversion sewer. Soil characteristics are, of course, a prime consideration, because the very large volume of overflow to be dealt with identifies the significant hydrostatic pressure to be encountered and the foundation needs for the large structure required.

Surface Storage in the Vicinity of Kingman Lake

Surface storage in the vicinity of Kingman Lake is attractive for the following reasons:

1. Since the only point of overflow from the Northeast Boundary Trunk Sewer is near this area, all overflow may be collected without extensive modifications or construction of a lengthy diversion sewer.

2. The differential elevation between the point of diversion and the immediate Kingman Lake area would permit gravity flow from the Northeast Boundary Trunk Sewer to any location likely to be selected for the storage basin.

3. Much of the area is undeveloped, indicating that the release of open space for a storage basin is possible,

especially since the construction of the basin could be coordinated with future development of recreational facilities and thus provide proper architectural identity and serve other aesthetic purposes.

After consultation with the many and varied agencies which have an interest in the recreational center or in any other facility existing or proposed in the area, it was agreed that the section of Kingman Lake south of the East Capitol Street Bridge should be investigated as a possible location for storage. Possible disadvantages of this particular area are:

1. Prior investigations in the Kingman Lake area have identified the presence of soft and compressible solid strata.

2. The Anacostia River is close, and periodic flooding of the area has occurred in the past.

3. The proposed eight-lane East Leg Freeway will require significant area, and its structural requirements must be considered in any plan.

To secure sufficient solids information about the site, the firm of Joseph S. Ward and Associates was retained to perform a soils investigation. The report of this study is submitted, as a separate volume, as Appendix C. Significant findings excerpted from the Ward report have been included in various sections of this main report.

A relevant conclusion from Ward's study is that although the upper soils strata are not suitable for the founding of structures, an underlying stiff clay can provide good foundation support. The depth of any storage basin at this site is defined by the requirements to excavate to an elevation of -40 feet (the clay zone), and by the requirement that the maximum water level be limited to -5 feet elevation to prevent hydraulic uplift pressures on the adjacent highway slab. The surface area of the storage basin is limited by the need to stay within the boundary of the Anacostia River, the East Capitol Street Bridge, and the western edge of the proposed East Leg Freeway. Also limiting are the requirements that any proposed water reclamation facility must be set back from both the existing sea wall and the proposed flood dike along the Anacostia River. Within these limits, any number of different size storage basins can be constructed; the actual size depends on how much of the space below the proposed eight-lane highway is used, how much space is allotted for the water reclamation facility, what the setback is from the river, and at what level the cover of the basin is placed. If the flood dike is constructed east of the existing sea wall,

the maximum capacity basin that can be constructed is 235 million gallons; a practical minimum is 90 million gallons, and any capacity between these is possible.

Tunnel Storage

The concept of tunnel storage is similar to that of a storage reservoir, i.e. sufficient storage for the sewer overflows, with provision to pump the stored wastewater back into the regular sewers for conveyance to a treatment plant when the storm subsides. This approach also requires adequate sizing of inlet structures for the storage tunnels to eliminate the existing surcharge conditions in the main sewer lines. Under this alternative, storage would be in large-diameter tunnels rather than in shallow underground reservoirs. Recent developments in the tunnel construction and tunneling equipment fields enhance the feasibility of this approach, particularly in regard to available maximum tunnel diameters. Tunnel storage has the advantages (over surface storage) of less land requirement, less public inconvenience, greater reliability, and more flexibility, as discussed in a previous report (1). A decided advantage (over a single storage reservoir at the end of the sewer) is the capability tunnel storage has for providing surcharge relief of the total sewer system. This is accomplished by locating vertical shafts in the sewer system at various points to intercept flows and provide surcharge relief along critical sections of the sewer. This dual application is especially significant in view of current District of Columbia plans to construct a relief sewer in the Northeast Boundary Trunk Sewer Area at an estimated cost of $33,000,000 (1969 cost). Attached as Appendix B is a discussion of the application of tunnel storage to the Northeast Boundary Trunk Sewer, its cost, and the geological investigative program required to provide the information necessary for design.

Water Quality Requirements

Water quality standards for swimming and activities such as boating and aquatic life propagation have been established by various agencies; however, a project such as the Kingman Lake Project was not anticipated when these standards were established. Public acceptance as well as public health are of concern, and existing criteria may have to be supplemented by additional assurance before they can be applied to this project. In a communication dated 17 December 1970, Mr. John Brink of the District of Columbia Department of Public Health stated "Specifically, the facilities proposed for treating combined sewage must be 'fail-safe' and able to consistently produce water of drinking quality."

Several projects, including the South Lake Tahoe Sewage Treatment Plant and the Santee Recreation Project, have demonstrated that these rigid standards can be attained.

Of special interest is the experience obtained in operating the Santee Recreation Project in Santee, California, as reported in a recent publication (7). The Santee Project demonstrated that public acceptance of

the reuse of wastewater for fishing and swimming is possible; however, extensive and deliberate measures were taken by several agencies to support that project and to promote public approval. Unless similar measures are taken for the Kingman Lake Project, social stigma may act to block the achievement of the social goals of the project.

Swimming Lake Water Quality

Swimming is a primary water contact recreation activity in which there is prolonged and intimate contact with the water. Public health is of paramount concern, and water quality standards generally reflect both the considerable risk involved of ingesting contaminated water and the documented possibility of disease transmittance. In this sense, viral and bacterial levels are a primary concern. The District of Columbia Department of Public Health's bacteriological criterion for water contact recreation is that fecal coliform are not to exceed 200/100 ml. The department has not established standards for viruses.

Even though the source of water for the swimming lake is highly contaminated, this is not a disqualifying condition, because the water can be treated to a quality level suitable for swimming. Actually, the primary source of contamination is that introduced by the swimmer himself. Chlorination is an effective disinfectant for swimming pools, but its effectiveness in large bodies of water is uncertain. A free chlorine residual is necessary to assure effective destruction of viruses as well as of bacteria, but chlorine is a strong oxidizing agent and reacts with substances introduced by bathers, e.g. ammonia. These reactions shift the concentration of chlorine from a free residual to a combined residual which is ineffective against viruses. Use of chlorine is satisfactory if distribution of free chlorine is achieved by effective turnover of the swimming water; however, effective turnover is difficult to achieve in large bodies of water, and isolated stagnant pockets of water containing no free chlorine residual may develop. Another disadvantage of chlorination is that it requires maintenance of pH below 7.4 in order to prevent significant dissociation of the hypochlorous acid into components which have far less disinfectant power; unfortunately, water with a pH lower than 7.4 is conducive to eye irritations.

Recent research (8, 9, 10) has indicated that iodine in conjunction with chlorine may overcome the limitations previously discussed. Both iodine and a product of its hydrolysis, hypoiodous acid, possess excellent germicidal properties against pathogenic bacteria and viruses. Iodine has a lower oxidization potential than chlorine, and consequently does not react as readily with organic and other oxidizable matter encountered in bathing water. Therefore, residuals of free iodine persist much longer than free chlorine residuals. In the presence of stronger oxidants, reduced iodide ions resulting from any reactions between iodine and oxidizable matter are re-oxidized to the original effective form by the oxidant. Chloramine, the most common form of combined chlorine, is a strong oxidizing agent and is capable of oxidizing reduced iodide ions. Objectionable colors and odors associated with some chemical forms of

iodine are avoided by maintaining a pH range of 7.5-8.0, which is above the eye irritation range and at a level where the dissociation of hypoiodous acid is negligible.

These observations suggest the use of iodine and chlorine will maintain viricidal and bactericidal agents at a concentration sufficient to assure that disinfection is an immediate and continual process throughout the swimming area, even in isolated stagnant pockets. An extensive monitoring and control system should be established to detect the residual disinfectant levels and to regulate the flow of disinfected water to specific areas where residuals drop below predetermined levels.

Observations by public health authorities generally agree that water turnover period should be no longer than 12 hours (and preferably limited to 6-8 hours) to maintain sanitary conditions in swimming water disinfected by chlorine. Turnover periods required for water disinfected by iodine have not yet been developed; however, on the basis of the foregoing discussion of the greater persistence of free iodine residuals, the minimum turnover periods required for iodine-disinfected water should be longer. The turnover proposed for this project is 8 hours.

Few people will swim in water containing floating or suspended solids or objectionable color or odors, especially if the source of the swimming water is known by the public to be polluted. Although turbidity and color problems were experienced in the Santee Project, public acceptance of the swimming facility was still good. Even so, the opportunity for public acceptance would be enhanced if the water is free of turbidity and color. This suggests that consideration must also be given to 1) nutrient concentrations and their effect on seasonal blooms of algae; 2) turbidity levels associated with different types of bottom material; and 3) other factors which may not be related to health but add to or detract from the enjoyment of swimming.

Boating-Fishing Lake Water Quality

In contrast to swimming, contact with water during boating and fishing activities is incidental, and bacteriological standards are far less stringent. The D.C. Department of Health's criteria for fishing and boating are a geometric mean fecal coliform count of not more that 1,000/100 ml and a limit of 2,000/100 ml in no more than 10 percent of the samples.

Of more concern is the transmittance of harmful bacteria and viruses to individuals eating fish caught from the lake. After two years of study, the public was permitted to eat the fish caught from the Santee Lake. Extensive study never isolated any viruses in either fish or algae. The concentration of coliform in the intestinal tract content of fish was slightly higher than for fish obtained from fresh water lakes, but it was felt that this did not prohibit human consumption because bacteria did not reach the edible flesh of the fish.

Water quality criteria are well established for varying species of fish and other aquatic life, and the criteria obviously vary with the type of aquatic life desired. The water quality aspects, other than bacteria and viruses, of concern in this project are dissolved oxygen, temperature, pH, alkalinity, turbidity, settleable material, and nuisance plant nutrients. The level at which these are present in a fresh water environment almost totally determines the biotic response. To assure the spawning, egg development, and growth of such warm-water fish species as largemouth bass and bluegill (commonly stocked species for fishing lakes in the Middle Atlantic), the criteria listed in Table 11 are recommended (11). Certain criteria concerning toxic chemicals, heavy metals, oil, color, dissolved solids, and tainting substances can be maintained if a minimum degree of control is placed on industrial and commerical activities in the drainage basin. If this cannot be accomplished, the influent to the lakes should be monitored.

Table 11

Recommended Water Quality Criteria for Fishing-Boating Lake[1]

Aspect	Criteria
pH	6.0-9.0
Total Alkalinity	$\geq$ 20 mg/L
Dissolved Oxygen	$\geq$ 5 mg/L
Turbidity	$\leq$ 25 Jackson Units
Suspended Solids	$\leq$ 25 mg/L
Total Phosphorus	$\leq$ 0.05 mg/L
Temperature	$\leq$ 90°F (Growth) and
	$\leq$ 75°F (Spawning, Egg Development)
Fecal Coliform	$\leq$ 1,000/100 ml

[1] Source: "Water Quality Criteria", National Technical Advisory Committee to the Secretary of the Interior, FWPCA, Washington, D.C., April 1, 1968.

The experience of the Santee Project is relevant to a discussion of water quality. The Santee lakes are in an advanced state of eutrophication, and major fishkills have occurred. The fishkills were attributed to high temperature and to the depletion of dissolved oxygen resulting from both the respiration of a predominating growth of algae and the oxygen demand by the settled algal biomass. The two-year average inorganic nitrogen and phosphate concentrations in the influent to the lake experiencing the most severe algae growth were 0.7 mg/L and 1.9 mg/L, respectively. Higher concentrations of phosphorus were recorded during the periods of the major fishkills. The BOD of the influent to the lake averaged 3.5 mg/L, and at this level it did not have a significant effect on dissolved oxygen. In fact, the effluent from the lake had an average BOD of 6.0 mg/L, nearly twice as high as the influent concentration. A yield of 400 pounds of fish per acre per year was obtained from the Santee Lakes during somewhat balanced conditions.

Indicated Effluent Standards

The previously discussed water quality criteria provide a basis for determining standards for the quality of the influent to the lakes. Effluent standards based on the water quality criteria and on the waste assimilative capacity of the lakes are summarized in Table 12.

Table 12

Recommended Standards for Influent to Recreational Lakes

Aspect	Swimming Lake			Fishing Lake		
	Min.	Avg.	Max.	Min.	Avg.	Max.
pH, units	7.5	--	8.0	6.0	--	9.0
BOD, mg/L	--	5	10	--	5	10
Suspended Solids, mg/L	--	15	50	--	25	50
Total Phosphorus, mg/L	--	0.05	1	--	0.05	1
Free Chlorine, mg/L	0.5	1.0	5.0		(See Note)	
Free Iodine, mg/L	0.5	1.0	5.0		(See Note)	
Fecal Coliform/100 ml	--	--	200			

Note: To promote the growth of aquatic life, the influent to the Fishing Lake should contain practically no chlorine or iodine, combined or free; however, to protect public health the influent should be disinfected.

Water Reclamation Facility Capacity

For a project of this type, the capacity of the water reclamation facility determines the storage reservoir drawdown rate and the amount of reclaimed water that can be introduced to a swimming facility. These aspects in turn affect the frequency of overflow to the Anacostia River and the number of bathers which can be permitted to use a swimming facility at any given time.

Swimming Facility Consideration

The number of bathers which may use a swimming facility is limited, in the interest of health and safety, by six factors:

1. Ratio of non-swimmers to swimmers
2. Bather control
3. Surface area of water available
4. Surface area of the swimming facility
5. Turnover period required to maintain water quality objectives
6. Capacity of the water reclamation facility

Of these, water reclamation facility capacity is the most critical. The overall limitation is developed through a series of relationships.

First, the ratio of non-swimmers to swimmers determines area requirements and average depth, which in turn establish a minimum volume of water for swimming; turnover period is a function of volume of water and water reclamation facility capacity; and as a safety precaution, the number of bathers permitted by these relationships must not overcrowd available surface area.

Several agencies have established minimum area requirements to provide bather safety. For swimming pools, The American Public Health Association (APHA) standards of 20 sq.ft. for bathers using water shallower than 5 feet, and 36 sq.ft. for swimmers in deeper water, are commonly used (12). APHA observes that in arriving at these figures, it assumed that only half the non-swimmers (those using the shallower water) and only two-thirds of the swimmers are in the pool at any one time. Thus, the APHA standards for people present at the facility are 10 sq.ft. and 24 sq.ft. per non-swimmer and swimmers, respectively. For a natural lake, where there is a strong preference for a lower bather density, the commonly-accepted standard is 50 sq.ft. per person present at the facility (13). This latter standard is more appropriate than the APHA standards for the Kingman Lake Project, because it would provide more space per bather and avoid the overcrowded conditions prevalent at so many swimming pools. On the basis of a breakdown of bathers into 75 percent non-swimmers and 25 percent swimmers, the average depth of the swimming area would be 4.5 feet. At this depth, the minimum unit surface area requirement of 50 sq.ft. would mean a minimum of 1,700 gallons of water for each bather present at the facility but not necessarily in the water. On this basis, the allowable bather load is a function of water reclamation facility capacity and of water turnover period. Table 13 is an array of available area and allowable bathers for various facility capacities and turnover periods.

This shows that the available surface area is not fixed, but varies with facility capacity and water turnover period. For the range of conditions presented in the table, it is evident that only part of the northern section of Kingman Lake can be developed for swimming. The required swimming area can be hydraulically isolated in the lake without the use of a physical barrier, by proper design of an automated recirculation system with multiple inlet distribution of purified water at the shallow edges and pickup for treatment from the deeper water. Automated monitoring systems and the delivery system controls can be combined to provide maximum recycle to areas requiring the greatest water turnover. Effective replacement of water would permit continuous use of all swimming and bathing areas.

Consideration must be given to the quantity of purified water introduced per bather in the water. Studies performed by various recreational agencies indicate that only about half of the bathers present at a swimming facility are actually in the water at any one time. Therefore, for water

Table 13

Available Swimming Areas and Maximum Allowable Number of Bathers for Various Designs of Water Reclamation Facility

	Water Reclamation Facility Capacity					
	25-mgd		35-mgd		50-mgd	
Water Turnover Period	Swimming Acres	Maximum Number of Bathers	Swimming Acres	Maximum Number of Bathers	Swimming Acres	Maximum Number of Bathers
6 Hours	4.3	3,700	6.0	5,200	8.5	7,400
8 Hours	5.7	5,000	7.9	6,900	11.3	9,900
12 Hours	8.5	7,400	11.9	10,400	17.0	14,800
24 Hours	17.0	14,800	23.8	20,800	33.9	29,600

Note: Maximum available water surface of swimming lake is approximately 46 acres.

turnover periods of 6 hours, 8 hours, 12 hours, and 24 hours, the purified water introduced per bather hour is 560 gallons, 420 gallons, 280 gallons, and 140 gallons, respectively. Studies performed by various recreational agencies suggest the daily turnover rate of users at a bathing beach facility ranges from 1.5 to 3.0, with 3.0 being the predominant value. For the Kingman Lake Project, in which there will be other activities besides swimming to interest visitors, the 3.0 turnover rate is probably appropriate. This suggests that the maximum allowable daily bather load is three times the values listed in Table 13.

Bathhouse facilities, although not directly related to the size of swimming facilities, must be considered with regard to their economic impact on the project. The bathhouse facility sizing has been based upon a peak bather load of 20,000 at any one time. The assumed composition of bathers is: 60 percent women and children (using women's dressing rooms), and 40 percent men.

Six separate bathhouses have been envisioned. The bathhouses will be separated into men's and women's sections. Each women's section will provide one water closet per 50 women, one lavatory per 100 women, one shower per 50 women, and one dressing booth and one basket locker per 20 women. Each men's section will provide one water closet per 75 men, one urinal per 75 men, one lavatory per 100 men, one shower per 50 men, and one dressing both and one basket locker per 20 men.

Bathhouse construction is expected to be concrete-slab floors, walls of stucco on cement blocks, open-top buildings with exposed wooden beams. Fiberglass or anodized aluminum partitions for dressing room and water closet stalls, shower rooms (10 showers heads per room), and central basket locker rooms. Including office and utility space, approximately 13,000 square feet are required for each building.

Drawdown of Storage Reservoir

Besides limiting the number of swimmers which may be admitted to the lake, the capacity of the water reclamation facility is related to the probability of overflow exceeding the capacity of the storage reservoir, since it determines the drawdown rate. Regardless of any selected capacity of the storage reservoir, it is possible that the combined effect of two or more storms, occurring within a relatively short period of time, will result in runoff in excess of the reserve capacity of the reservoir, even though the separate runoff from each storm is less than the design capacity.

The investigation of recurring storms is properly in the realm of a Markov Chain Analysis, but sufficient data are not currently available to perform this type of statistical analysis. A reasonable determination of the probability of preventing reservoir overflow can be made by assuming that rainfall intensity for consecutive 24-hour periods is independent.

An overflow of the storage reservoir would have the most serious impact during the periods when the Potomac and the Anacostia River are at low flow, i.e. during August, September, and October. This is compounded by the circumstance that the more intense rainfalls display a higher probability of occurrence during these months. A Weather Bureau Technical Paper (14) provides isopleths relating 24-hour duration rainfall, frequency, and months of the year with various probabilities. The values in this graph were used to develop a graph of the continuous function of probability versus frequency for the August-October period. In turn, this graph was used to determine the probability that the 24-hour rainfalls of particular frequencies will be equaled or exceeded during that period.

The typical short summer showers occurring in August, September, and October have a frequency which cannot be read with accuracy from the previously described graph; however, the runoff from these storms will have some effect on the probability of overflowing the storage reservoir. To account for this type of runoff, the expected runoff per day was calculated from the mean rainfall in August-October period, as reported in a National Weather Center Publication (15). If 60 percent of the rainfall overflows from the Northeast Boundary Trunk Sewer, a daily runoff of 9 million gallons can be expected in the August-October period.

Table 14 is a listing of the probability of overflow of the storage reservoir for various water reclamation facility capacities.

Table 14

Probability During August-October
of Two or More Storms
Exceeding Reserve Storage Capacity

Reclamation Facility Capacity	Probability of Exceeding Storage Capacity
25 mgd	18 percent
35 mgd	9 percent
50 mgd	4 percent

The methodology used was as follows: 1) determine a net drawdown rate (treatment plant capacity minus 9 mgd); 2) determine for each day the probability of the 24-hour rainfall resulting in runoff equalling or exceeding the accumulated net drawdown; and 3) add the daily probabilities.

The capacity to retain combined sewer overflow is improved with each increase in treatment plant capacity. The maximum capacity to retain overflow is equal to the capacity of the storage facilities plus the accumulated drawdown through the duration of overflow. The volume of

overflow for various rainfall frequencies was based on the 24-hour rainfall; therefore, the daily capacity of the water reclamation facility can be added to the volume of the storage facility to determine total capability for retention of overflow.

Treatment Process Investigation and Evaluation

Planning

The FWQA has funded many research and development projects for the investigation or demonstration of various non-conventional processes for treating combined sewer overflow. The more promising of these projects utilized methods involving either screening or filtration rather than biological treatment methods. In general, the effectiveness of filtration lies in the fact that combined sewer overflows and storm water runoff contain large fractions of suspended waste constituents (recognized to be non-volatile discrete solids) rather than high concentrations of soluble organics.

The laboratory test program of a previous study (1) on the treatment of combined sewer overflow indicated that filtration through multi-media filters is a technically feasible process for the removal of suspended solids and non-soluble BOD from combined sewer overflows. The application of filtration appears promising; however, additional laboratory study was deemed necessary to:

1. Confirm the results of the previous study.

2. Demonstrate that filtration in combination with other processes can treat combined sewer overflow to the quality required for the Kingman Lake Project.

3. Evaluate the performance of filtration and the other treatment processes under the extended and varying operational conditions anticipated at the Kingman Lake Project, i.e. the treatment of recycle water from the Lake and the treatment of makeup water from the Anacostia River.

Some of the studies of other treatment processes for combined sewer overflow have produced favorable results, and the application of some of these processes appears to have some promise. In parallel with the laboratory work conducted in this study, a literature review of other promising treatment methods was conducted to evaluate their use in the Kingman Lake Project.

Laboratory Investigation Program and Results

A detailed discussion of the laboratory investigation program and results is attached in Appendix A. In undertaking the laboratory program, synthetic wastewater samples were produced which approximated the BOD, suspended solids, and silt concentrations expected in combined sewer overflow.

The negligible removal of soluble BOD through a filter system and the requirement for low effluent BOD concentrations establish a need for an intermediate organic removal process. Activated carbon adsorption is a proven process for removing soluble organics in low concentrations, and laboratory investigations were conducted to confirm its application to a combined sewer overflow filtration system. The treatability studies with filtration and carbon adsorption uncovered a potential problem of fouling of the carbon columns with colloidal solids which would pass through the filtration process. Consequently, coagulation and sedimentation studies were undertaken to condition or prepare the wastewater for a more efficient filtration. The laboratory investigation program, in summary, demonstrated that a treatment system of chemical coagulation, sedimentation, filtration, and activated carbon adsorption could produce an effluent having BOD and suspended solids concentrations well below the maximum levels recommended for the Kingman Lake Project. This performance was demonstrated for conditions simulating: a three-day drawdown of combined sewer overflow, the treatment of makeup water from the Anacostia River, and the treatment of recycled water from the swimming and fishing lakes.

In addition, it was necessary to undertake testing of such aspects as sludge dewatering, algae growth, and disinfection, to gain more complete understanding of the effectiveness of the envisioned project. A detention time of 15 minutes and a chlorine dosage of 2.0 mg/L resulted in a complete absence of total coliform and fecal coliform organisms in the final effluent. Preliminary tests of a sludge produced in the demonstration unit indicated that a sludge cake satisfactory for disposal purposes could be obtained through centrifugation.

Although total phosphate removals as high as 90 percent were achieved in the demonstration unit, algae production from wastewater nutrient was not inhibited. This can be attributed in large part to the fact that the phosphate levels in the raw synthetic wastewater samples were high, approximately ten times as high as those determined in a previous WESTON study of combined sewer overflow in the District of Columbia. However, the activated carbon pilot unit studies also showed elutriation of phosphate from the carbon bed when a synthetic wastewater (relatively high phosphorus content) was followed by a reservoir water or river water run.

It should be noted that a 90 percent removal of the phosphate concentration expected in D.C. combined sewer overflow would produce an effluent phosphorus concentration of 0.1 mg/L. This is equal to the guideline concentration recommended in a study (11) for flowing streams and twice that recommended for streams entering lakes or reservoirs. Considering that the swimming lake will have a relatively short water displacement period and that chlorine, which acts as an algicide, will be used, it is anticipated that excessive algae growth will not be a problem in the swimming lake. Since the fishing-boating lake will have a lower displacement period and an algicide will not be used, excessive algae growths may present a problem there.

Literature Evaluation

The laboratory investigation program in this study was limited to the confirmation of a process involving filtration and activated carbon. A literature review was conducted of other promising treatment processes to evaluate their application to the Kingman Lake Water Reclamation Project. Appendix E gives an account of the literature review of ozonation, rotary vibrating screening, microstraining, and U-tube aeration, and of their indicated applications. These processes have been demonstrated to be technically feasible; however, their application to the Kingman Lake Project may require further development work as well as confirmation work, and appears to be more costly than the processes investigated in the laboratory phase of this study. In summary, the indicated applications of these processes are as follows:

Ozonation - Oxidation of dissolved organic materials in lieu of activated carbon

- Disinfection of influent to boating-fishing lake in lieu of chlorination

- Odor control in storage basin

Rotary Vibrating Screening - Removal of suspended solids in lieu of filtration

Microstraining - Removal of suspended solids in lieu of filtration

U-Tube Aerators - Alternative aeration device

In addition to reviewing reports related to these alternative projects, it was necessary to review previous reports (1,16) of the performance of activated carbon and filtration to determine design parameters. (The laboratory program was oriented to demonstrate the quality of the effluent from these unit processes rather than to determine design parameters.) These reports indicated that the basic design parameters are a flow rate of 5 gpm/sq.ft. for multi-media filtration, and a flow rate of 6 gpm/sq.ft. and a detention time of 29 minutes for activated carbon adsorption.

Presentation of Alternatives

The foregoing criteria establish that there are numerous alternative strategies for collecting, storing, and treating overflow. The process of selecting the appropriate alternative, i.e. the alternative which represents a balanced assessment of the costs and benefits involved in the project, is facilitated by reducing the unwieldy number of feasible alternatives to those offering a reasonable, but wide choice. Following is a presentation of these alternatives. A discussion of the costs and distinct benefits associated with each is discussed in a subsequent section.

Storage Alternatives

Within the confines of the Anacostia River, East Capitol Street Bridge, and the proposed East Leg Freeway, it is possible to construct a surface storage basin having from 90 to 235 million gallons of storage capacity; these limits as well as an intermediate capacity of 175 million gallons present a reasonable range of choices.

Another option is tunnel storage. Besides the capability to store overflow, the tunnel storage concept provides sewer relief and reduces the frequency of surcharging. More soils evaluation is needed to satisfactorily engineer this concept; however, the evaluation of an 85-million gallon tunnel permits a reasonable comparison of surface and tunnel storage.

Water Reclamation Process Alternatives

The laboratory investigation program in this study demonstrated an effective system of processes for treating overflow. A literature evaluation disclosed that there are some promising alternatives to those unit processes investigated, e.g. fiberglass filtration, microstraining, ozonation, and U-tube aeration. Whereas, the process developed has been demonstrated to be technically sound, some development or confirmatory work on each of the alternative unit processes would be required. In this light, only the process design confirmed in the laboratory study will be presented.

Nevertheless, the opportunity presented at the proposed Kingman Lake facility for operation of a field test unit of significant magnitude should not be overlooked. An adequate amount of space (yet only a small fraction of the total available space of the reclamation facility) could be used for pilot-scale facilities for the investigation and development of promising alternative unit processes for the treatment and reclamation of combined sewer overflows. The justification for such an investigative and demonstration facility is the clearly demonstrated fact that pollution from combined sewer overflows is a substantial portion of the overall stream pollution problem.

Reclamation Facility Capacity

Based on the allowable bather load associated with various plant capacities, the drawdown rate of the storage basin and its relationship to overflow of the basin from repeat storms, and the additional storage provided by the plant operating during the period of the storm, the following reclamation facility capacities were considered reasonable for economic and environmental evaluation: 25 mgd; 35 mgd; 50 mgd.

SECTION VI

CONCEPTUAL ENGINEERING DESIGN

General Design Basis

The conceptual design of the facilities required in this project is based on varied information provided by a number of separate studies. These studies range from investigations providing definitive information, such as the detailed soils analysis in the field and the process investigations in the laboratory, to less conclusive studies requiring assumptions, such as the hydrological study. When assumptions have had to be made, the basis for those assumptions has been described.

In general, the factors which constitute the basis for design are:

1. Expected wastewater characteristics (as defined in a previous study (1) of combined sewer overflow in Washington, D.C.) and the wastewater quantities determined for overflows from the Northeast Boundary Trunk Sewer.

2. Wastewater treatability parameters derived from laboratory evaluation and published reports.

3. Effluent quality requirements.

The factors which have significant influence both on the conceptual design and on the economic evaluations are:

1. Selection of a specific storage capacity (which constitutes an implicit measurement of the pollution abatement) and of a water reclamation facility capacity will be deferred until after the economic evaluations in a later section of this report. However, to facilitate description of the conceptual design and to provide a workable basis for making cost estimates, a 50-mgd water reclamation facility and a 175-million gallon storage basin are illustrated in detail. Flow diagrams, hydraulic profiles, and related items for these capacities will be essentially the same for facilities with other capacities.

2. Requirements for the quality of influent to the fishing-boating lake and the swimming lake reflect established criteria.

3. A treatment system of chemical coagulation, sedimentation, filtration, and activated carbon adsorption has been demonstrated in a laboratory investigation program to produce an effluent having BOD and suspended solids concentrations within the allowable limits recommended for both the fishing and the swimming lakes.

4. The use of certain treatment processes as replacements for those studied in the laboratory investigation program has been established in other studies to be technically feasible. The conceptual design proposed in this report utilizes only those processes, with minor exceptions, confirmed in the laboratory studies; however, other waste treatment processes, e.g. ozonation, microstraining, U-tube aeration, etc. can be incorporated in the overall design to satisfy any interest by the FWQA to demonstrate them.

5. The laboratory program was oriented to demonstrate the quality of effluent which can be produced in conditions simulating those anticipated at Kingman Lake. Actual design parameters (e.g. activated carbon) were taken primarily from previous FWQA studies.

Soils Investigation

Subsurface Data Collection

Prior to the field investigation, test boring and laboratory test data were obtained from D.C. Highway Department pertaining to the existing East Capitol Street Bridge and to the proposed East Leg Freeway along Kingman Lake. Additional subsurface studies made by the Washington Metropolitan Area Transit Authority for the proposed subway system were reviewed. Review of the existing data aided in planning the field investigation and in the final analysis of the results.

Test Boring Program

The preliminary test boring program was started on February 2, 1970. Twenty-two borings were drilled for this investigation by Warren George, with inspection provided by Joseph S. Ward and Associates. The borings ranged in depth from 30 to 105 feet, and included six 4-inch borings made to obtain undisturbed samples for strength and compressibility testing in the laboratory, and seven borings drilled in the lakes. With the exception of the 3-inch undisturbed samples, the other samples were obtained by the Standard Penetration Test Method. Individual sample descriptions on the boring logs and laboratory identifications are in accordance with the Burmister (ASEE) Classification System, while the generalized strata descriptions are based on the Unified Soil Classification System. The detailed logs of the individual borings are shown in the Soils Engineering Report (Appendix C).

Piezometer Measurements

Piezometers were installed in four selected borings set in the sand and gravel stratum which overlies the stiff clay. The recorded ground-water levels vary between +2 and +5, which is slightly above tide level. This would suggest that there might be a slight artesian pressure in this stratum. Ground-water level measurements taken in other test borings

are presumed to represent water table conditions in the fill. These range from elevation -8 to +3 and indicate that water levels are near river level and generally change with tidal fluctuations.

Laboratory Testing

All samples taken in the field were delivered to Joseph S. Ward's soil testing laboratory. All samples were inspected, and tests were performed on selected samples. The tests performed in the laboratory according to the accepted procedures (Atterberg Limit determination, mechanical analysis, natural moisture content determination) were performed on both undisturbed samples and samples obtained by the standard penetration test. Unconfined compression, consolidation, triaxial compression, and laboratory vane shear tests were performed only on the undisturbed samples. The tabulated results of the laboratory testing program are given in Appendix C, along with a brief description of the methods used in performing the more complex tests.

Data Analysis

All soils and foundation data obtained during the course of the project, which includes results of prior investigations, the current field investigation, and the laboratory testing program, have been correlated and interpreted by the soils consultant, Joseph S. Ward and Associates. They have made an evaluation of the data, and have arrived at preliminary conclusions pertaining to the proposed structures. Their evaluations, conclusions, and recommendations are presented in Appendix C. The following significant findings, conclusions and recommendations have been excerpted from the soil report.

Soil Considerations

The soil conditions in the vicinity of Kingman Lake require special consideration in the construction of a storage basin and in the development of lakes suitable for fishing, boating, and swimming.

Storage Basin

The soil stratum which would have the greatest effect on the construction of a storage basin is the organic clay and peat, which was found in all borings. The extremely soft and compressible nature of this stratum prohibits the founding of structures on or above it, because of the danger of settlement. Due to the weakness of the material, excavations must be braced to resist high lateral loads, and in open cuts relatively flat side slopes are required to insure stability. For this reason, and because of ground-water conditions and the proximity of the river, it was recommended by the soil consultant that the concrete slurry wall method of construction be used.

The overlying fill has compressed and somewhat strengthened the organic material. However, this improvement is not deemed significant with respect

to rigid structures. Actually, the presence of the fill aggravates cut slope stability problems and increases lateral soil pressure on temporary and permanent walls.

The sand and gravel and the stiff clay underlying the organic material can provide good foundation support, and are, therefore, a logical limit for the excavations under consideration. Field investigation indicates that the sand and gravel zone is quite permeable, increasing its significance with respect to lateral and uplift pressures on deep structures. To provide maximum storage volume, construction of a storage basin with vertical walls is recommended. The bottom of this basin would be approximately at elevation -40. Due to the ground-water level and presence of weak organic soil, high lateral pressures are expected to act upon the walls. Diagrams showing the typical lateral pressures on both temporary and permanent walls are shown in Appendix C.

In order to serve effectively as cut-off walls to prevent seepage of ground water into the structure during and after construction, the bottom of the storage basin walls should extend well into the underlying stiff clay. To insure stability of the walls during all stages of excavation and bracing, a minimum wall penetration below the bottom of the tank of 15 feet would be required. In the case of the proposed structure, this would extend the walls to elevation -55. As mentioned in the Soils Report, a tie-back system for restraining the slurry wall is not practical because of poor soil conditions, and to obtain the required bracing it will be necessary to design an internal bracing system. With the inclusion of a vehicle parking roof as an integral part of the storage basin, the need for internal bracing would be reduced.

As envisioned, the parking roof would be designed for passenger car loading. However, if required, sections of the roof can be used as truck routes for servicing the water reclamation facility and must be designed accordingly. The structural design will make the maximum use of precast, prestressed beam and girders, which will facilitate construction and reduce construction costs.

Spread footings for support of the storage basin roof may be founded in the stiff clay or overlying sand and gravel zone. The net design bearing pressure has been determined to be 3.0 tons per square foot (tsf). The base of the footings should be a minimum of 4 feet below the bottom of the storage basin to justify this design pressure.

Caissons or piles are also suitable for roof support. Where these units, deep walls, or footings extend below elevation -50, a design bearing pressure of 4.0 tsf may be used. For purposes of estimation, a 50-ton steel pile may be assumed to reach capacity when driven to a pile tip elevation of -90.

Slurry wall construction will be used in the construction of the water reclamation facility building. It is anticipated that the slurry wall would be constructed around the perimeter of the building so that it

would function both as a foundation wall and as a hydraulic cut-off wall. Where the slurry wall extends into the existing lake, earth fill must be placed to provide a construction platform. These dikes should have a minimum top width of 24 feet built up to elevation +6, and would require low side berm approximately 25 feet wide on either side of the main dike to insure its stability. Dike construction should be kept at least 80 feet (horizontal distance) from the East Capitol Street Bridge to prevent any detrimental effects on the bridge foundation.

Settlement of spread footings is estimated to be 1 to 2 inches, with respect to the surrounding area, for footings designed with a bearing pressure of 3.0 tsf. Settlement of caisson or pile foundations will be negligible if properly installed, and should not exceed the elastic deformation of the piles or caissons.

Due to the excavation, there will be a stress release in the stiff clay underlying the storage basin. Theoretical analysis, based on an excavation period of one year, indicates the post excavation heave to be 3 and 2 inches at the center and perimeter of the basin respectively. Relative movement between the soil at the floor of the basin and at the wall and roof foundations will occur. The walls and structural foundations will settle slightly, while the clay in between will heave.

The effects of stress release will extend to the area immediately outside the storage basin. If the distance between the north wall of the storage basin and the East Capitol Street Bridge is 100 feet, the heave could be as much as 0.3 inches over a 30-year period. This amount, which should also be anticipated at the location of other adjacent structures, is insignificant.

Since a concrete bottom slab is desirable to facilitate cleaning of the storage basin, it is recommended that it be constructed in relatively small sections that can undergo moderate differential settlement without cracking. In addition, the bottom slab should be constructed on a gravel base and designed with open joints at walls and footings. These open joints should allow any excess hydrostatic pressure to dissipate and would probably be more reliable than relief valves.

Fishing and Bathing Lakes

In their present shallow condition, both the proposed fishing and bathing lakes will require excavation of bottom material. It has been estimated that the fishing lake will require 4 feet of excavation, while the bathing lake will require an average of 7 feet. These depths of excavation are deemed necessary to provide adequate depths for boating, fish propagation, and swimming, and to remove undesirable soil materials from the lake bottoms. On the bottoms of both lakes, there is a layer of organic silt approximately 1 foot thick, which exists in a semi-liquid condition. This layer should be removed; otherwise it could be stirred up easily and could contaminate the water. In addition, this material will be disturbed by the placement of a granular blanket and would redeposit over it.

In the case of the bathing lake, excavation will uncover the organic silt and clay which would not be suitable for bottom material, thus making it necessary to backfill with a sand blanket. It is recommended that this sand layer be not less than 3 feet thick in areas where the water is less than 7 feet in depth. In deeper areas, the thickness can be reduced to 1-1/2 feet. In order to prevent fine material from the miscellaneous landfill from being washed into the lake, it is recommended that the existing fill along the proposed beaches be covered with a minimum of 1-1/2 feet of clean sand and gravel.

For the boating and fishing lake, it is also advisable to cover the lake bottom with a 1-1/2- to 2-foot blanket of clean sand and gravel. The sand bottom is desirable from an aesthetic standpoint and for the purpose of providing a bottom conducive to the growth and propagation of desired aquatic life.

In regard to the excavation of both lakes, the most suitable method has been determined to be hydraulic dredging. Because of the several low-level bridges across the Anacostia River, large barges and bucket dredges are unable to get upstream as far as Kingman Lake. Therefore, the excavation materials will have to be pumped to a location downstream of the low bridges for removal by barge or pumped all the way to the disposal site.

Currently it is proposed that the waste dredging from the project construction be disposed of at the Dyke Marsh area, a part of Section 5 of the George Washington Memorial Parkway, U. S. Reservation 404V, South of Alexandria, Virginia. This site, however, will not be available if any considerable delay is encountered in starting the project. A permit from the National Park Service, U. S. Department of Interior, will be required for use of the Dyke Marsh area for disposal.

The sand and gravel material excavated from the area of the storage basin can be utilized as the granular bedding for the fishing-boating lake and for the bottom portion of the proposed beach and bathing lake. The top granular layer in the bathing lake and beach areas should be clean, washed, commercial white sand.

Maintenance of a water level in the bathing and fishing lakes at an elevation of approximately 3.5-4.5 feet (about 1 foot above normal high river level) would permit the lake to overflow into the river by gravity under normal conditions, and to prevent flow of contaminated river water back to the lakes either through the ground or through the lake outlet system. By raising the water level in the lakes, ground-water levels in the vicinity of the site can be expected to rise to this proposed level. With the higher ground-water level, some seepage of water to the river should be anticipated.

A major factor that will have a marked effect on ground-water conditions is the proposed flood protection dike. To prevent inflow of river water to the lakes during flood periods, the dike must be impermeable. Such an

impervious dike will not only prevent flood waters from entering the recreation area, but will minimize or prevent loss of water from the lakes to the river.

The flood protection dike is to be constructed by the D.C. Department of Highways to provide protection for sections of the proposed East Leg Freeway against the 100-year flood (hurricane) conditions. During high water or flood conditions in the Anacostia River, gravity overflow from the lakes into the river will be stopped by the tide gates, and discharge into the river will be accomplished by pumping.

Description of Proposed Facilities

Discussion of Process

Architect's drawings of the general layout, and preliminary plot plan, schematic flow diagram, and hydraulic profile (Drawings 2, 3, 4, 5, 10, 11, and 12) are presented here. A Summary of Design Basis and Major Unit Sizes and detailed flow diagrams (Drawings 101 through 107) are presented at the end of this section.

Combined sewer overflow from the Northeast Boundary Trunk Sewer is presently discharged to the Anacostia River through an existing triple-span sewer. This sewer will be intercepted downstream of the three cast iron tide gates, and the overflow will be directed north along the river approximately 2,000 feet to the proposed water reclamation facility. A portion of this extension will be constructed below the proposed East Leg Freeway.

In addition to the combined sewer overflow, the storm water discharges from the immediate Kingman Lake Drainage Area (D.C. Stadium, National Arboretum, etc.,) will be collected; this is presently conveyed through ten storm sewer lines discharging at various points along the west shoreline of Kingman Lake. The existing storm sewer lines will be intercepted and piped to the influent of the proposed storage basin. The combined sewer overflow from the Northeast Boundary Trunk Sewer and the local storm drainage will enter a diversion chamber, where the initial portion of the storm flow (up to 175,000,000 gallons) will be directed to the storage basin. Liquid level in the storage basin will be used to control the closing of a sluice gate to the basin and at the same time to activate the bypass to the Anacostia River. Emergency pneumatic controls will also be provided in the event of a power failure. The flow will pass through heavy-duty steel trash racks provided for removal of debris. The trash rack in each chamber will be approximately fifty feet wide and operated at a maximum of thirty feet Side Water Depth (SWD). Debris collected on the racks will be removed with a traversing, manually-operated trash rake and be conveyed to a storage hopper before being trucked to disposal. An overhead crane will be provided to remove heavy objects and also to serve as a back-up trash rake.

IN ADDITION TO THOSE FACILITIES RECOMMENDED IN THIS REPORT, THIS DRAWING SHOWS THE COMPLETE DEVELOPMENT OF KINGMAN LAKE RECREATION AREA ACCORDING TO HALPRIN PLAN

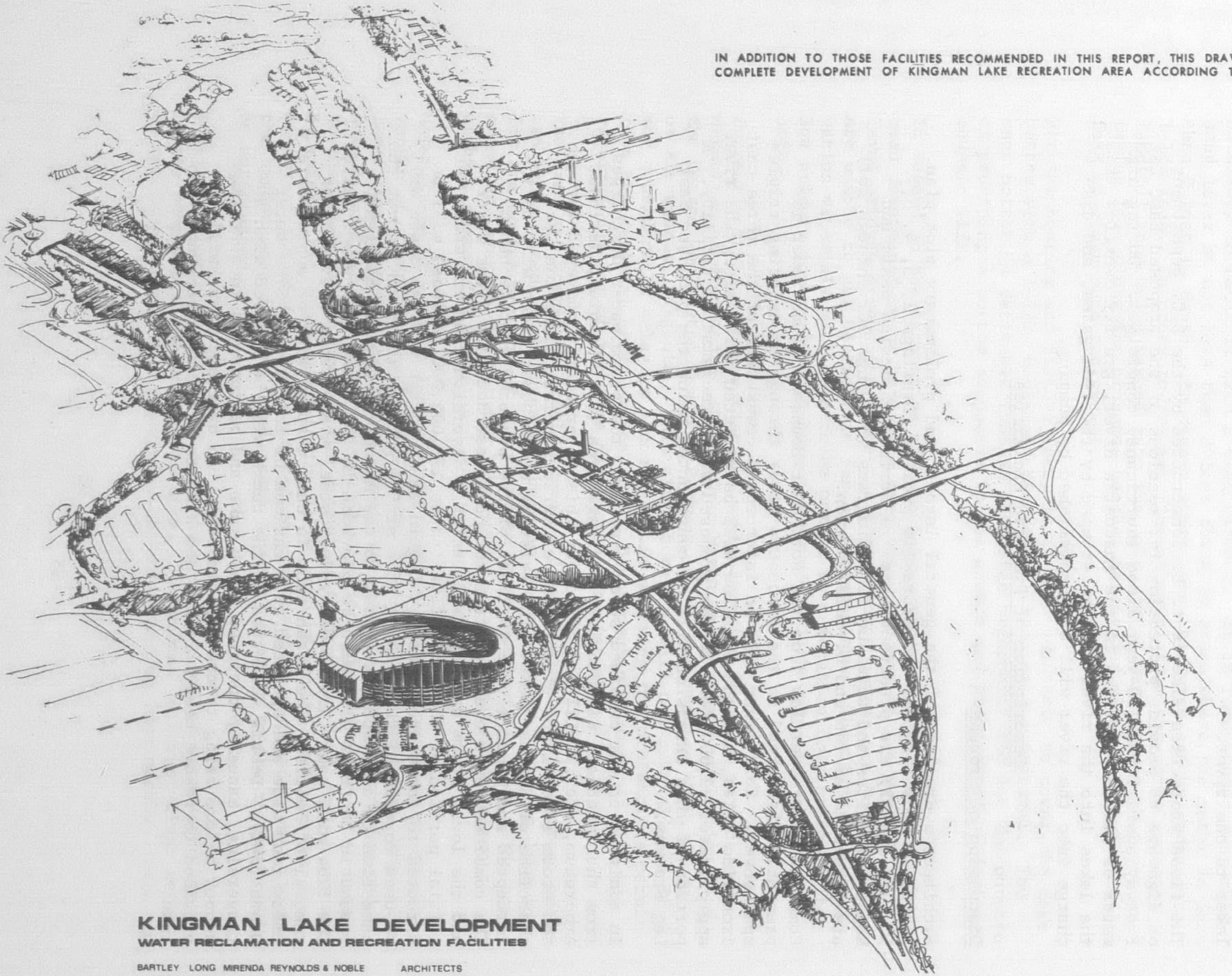

DWG. 2

KINGMAN LAKE DEVELOPMENT

WATER RECLAMATION AND RECREATION FACILITIES

BARTLEY LONG MIRENDA REYNOLDS & NOBLE ARCHITECTS

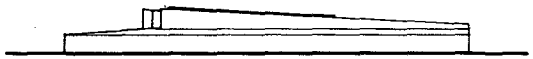

ELEVATION FROM RIVER
1"= 50'-0"

ELEVATION FROM LAKE
1"= 50'-0"

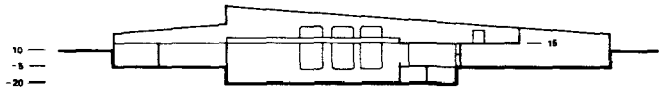

SECTION A-A
1"= 50'-0"

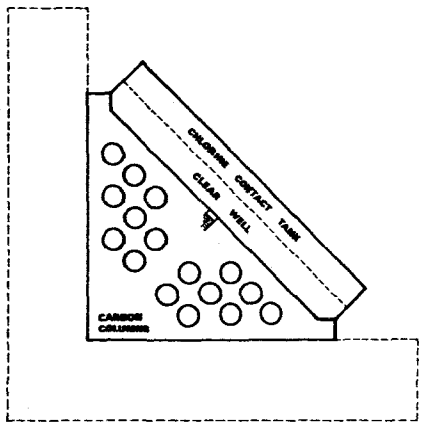

PLAN EL. -20.0
1"= 50'-0"

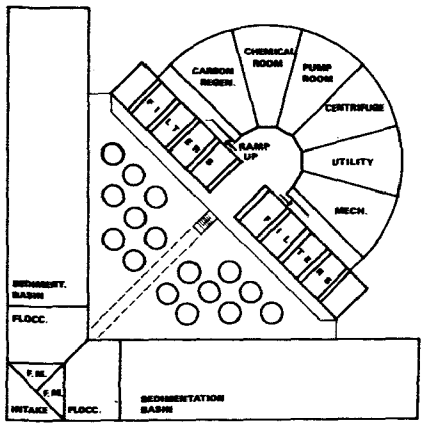

PLAN EL. -5.0
1"= 50'-0"

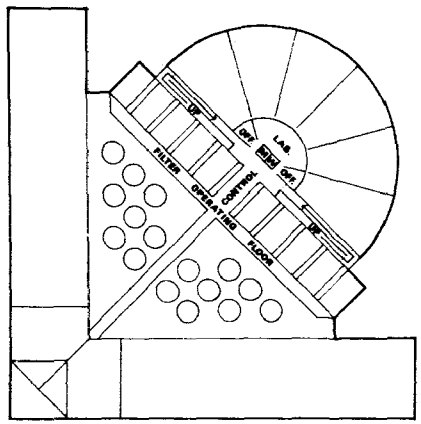

PLAN EL. 15.0
1"= 50'-0"

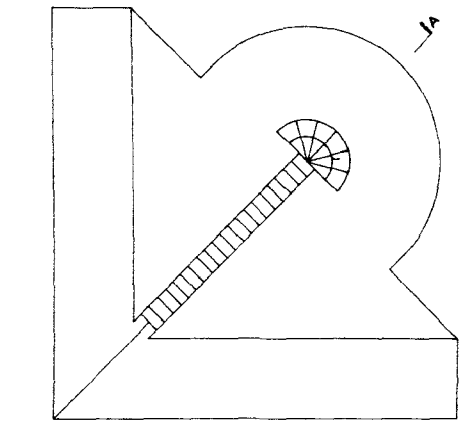

ROOF PLAN
1"= 50'-0"

DWG. 3

KINGMAN LAKE DEVELOPMENT
WATER RECLAMATION FACILITY

BARTLEY LONG MIRENDA REYNOLDS & NOBLE ARCHITECTS

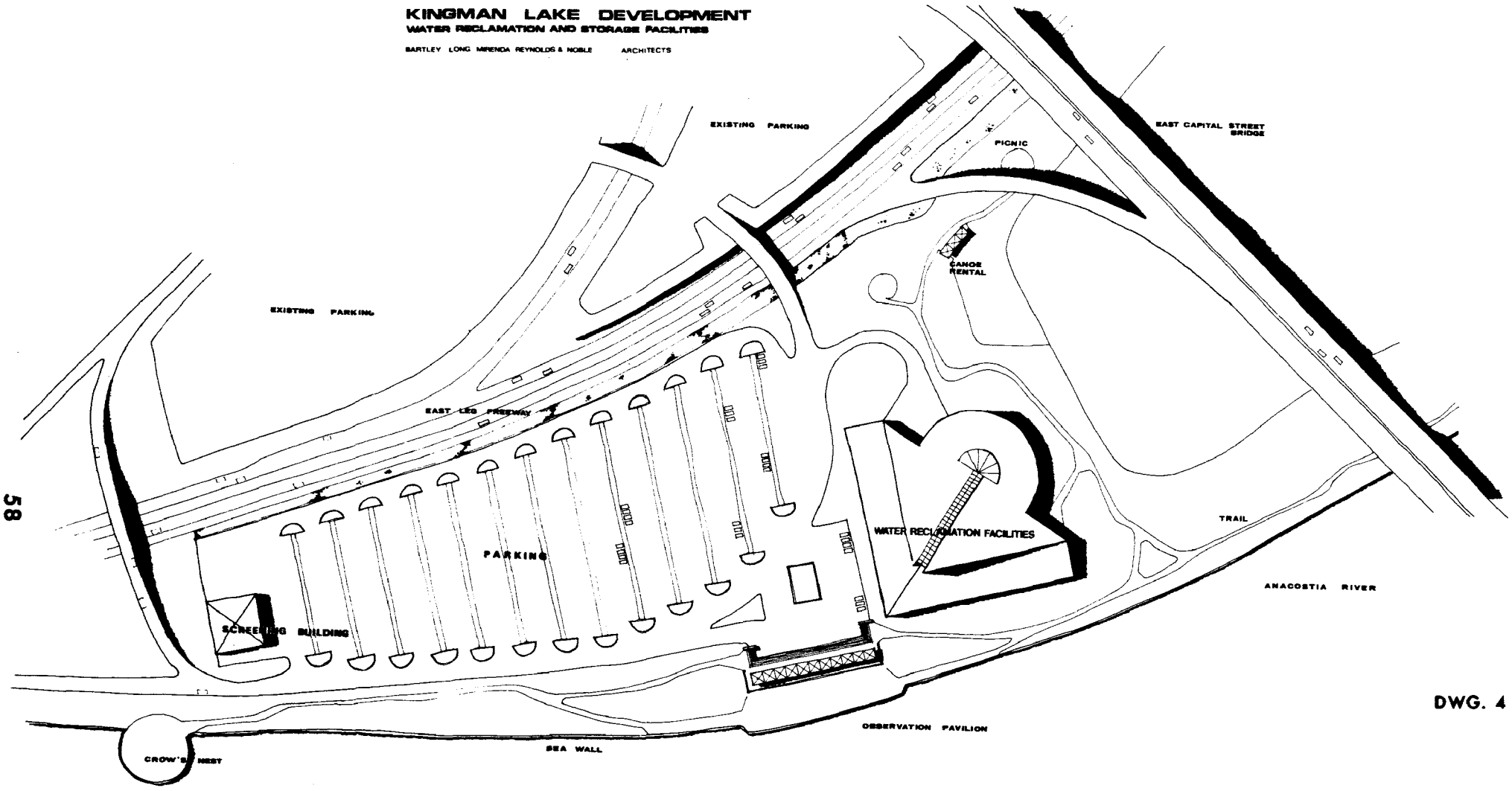
KINGMAN LAKE DEVELOPMENT
WATER RECLAMATION AND STORAGE FACILITIES
BARTLEY LONG MIRENDA REYNOLDS & NOBLE ARCHITECTS
EXISTING PARKING
EXISTING PARKING
PICNIC
EAST CAPITAL STREET BRIDGE
CANOE RENTAL
EAST LEG FREEWAY
PARKING
WATER RECLAMATION FACILITIES
TRAIL
ANACOSTIA RIVER
SCREENING BUILDING
OBSERVATION PAVILION
SEA WALL
CROW'S NEST

DWG. 4

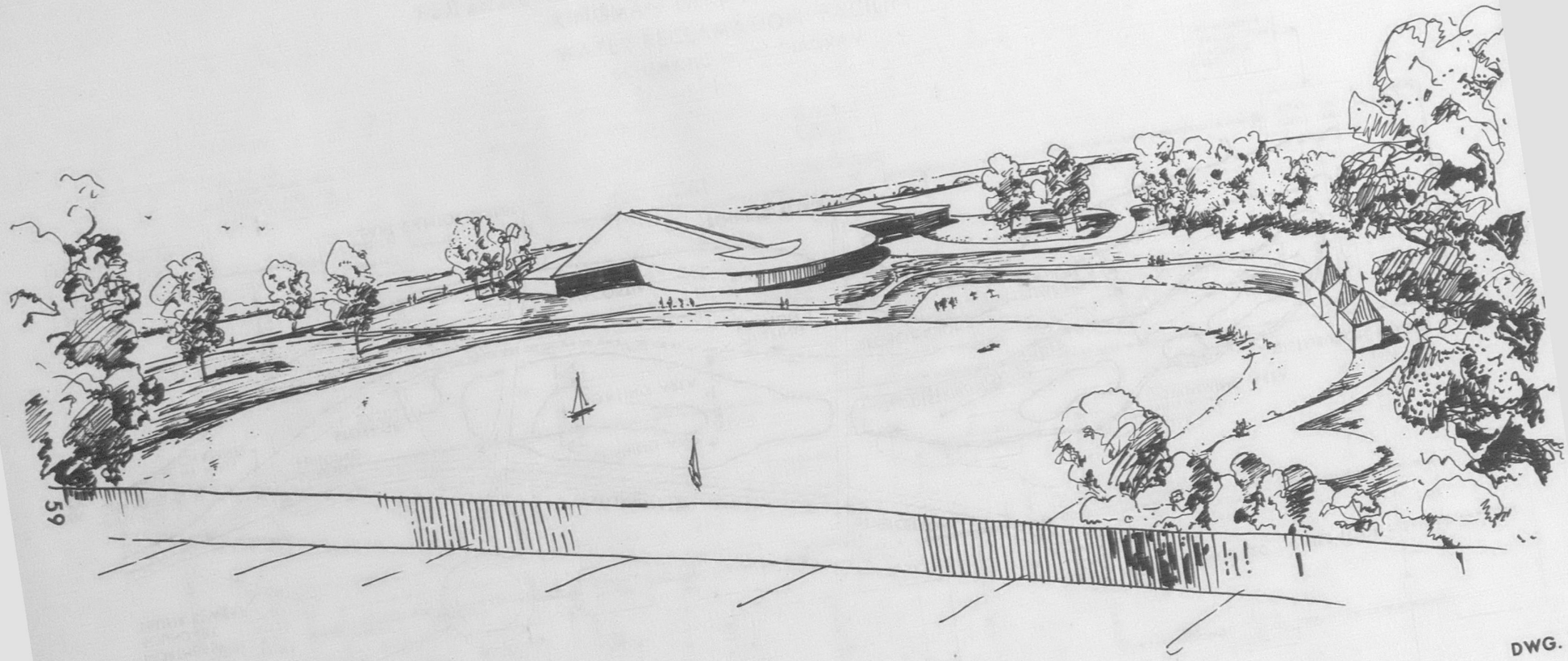

DWG. 5

KINGMAN LAKE DEVELOPMENT

WATER RECLAMATION FACILITY

BARTLEY LONG MIRENDA REYNOLDS & NOBLE ARCHITECTS

FEDERAL WATER QUALITY ADMINISTRATION

KINGMAN LAKE PROJECT

WATER RECLAMATION FACILITY

PLOT PLAN

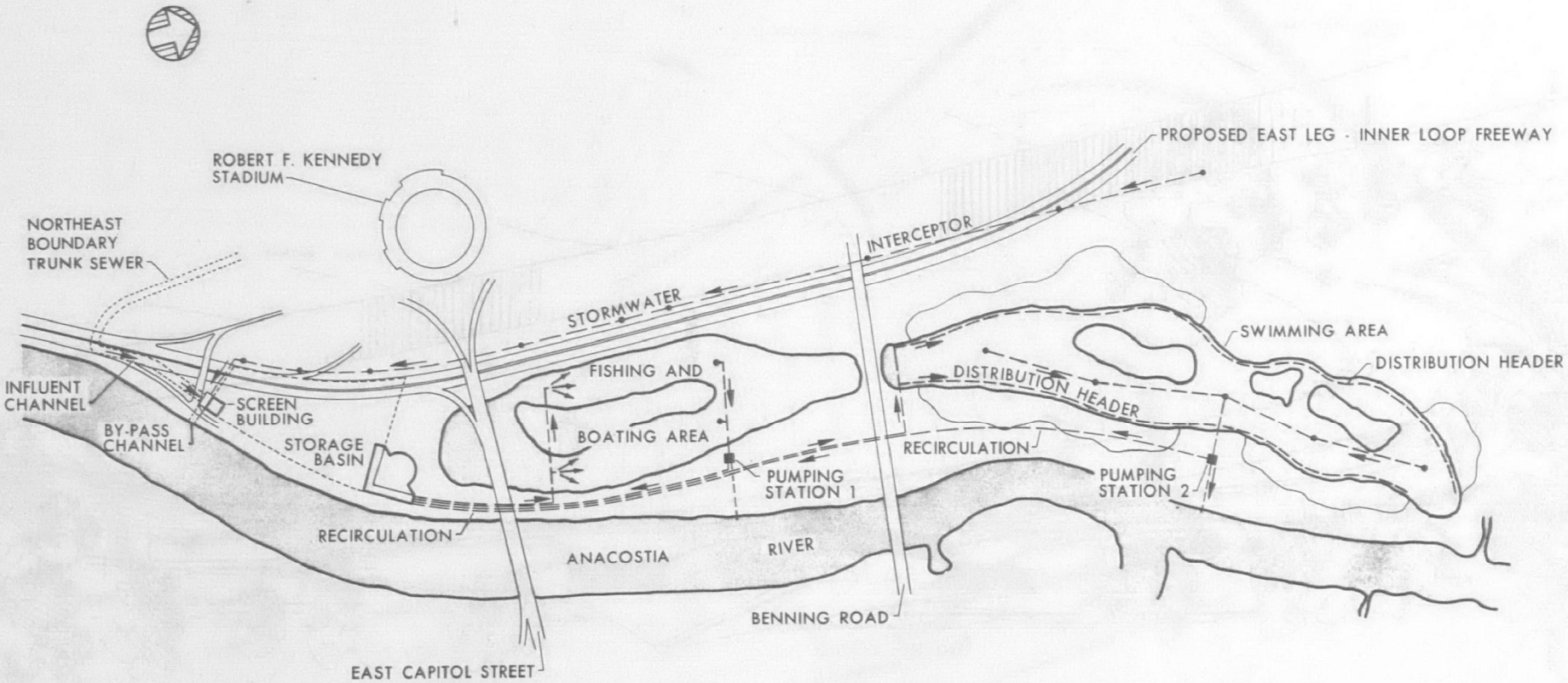

DWG. 10

FEDERAL WATER QUALITY ADMINISTRATION

KINGMAN LAKE DEVELOPMENT

WATER RECLAMATION FACILITY

SCHEMATIC FLOW DIAGRAM

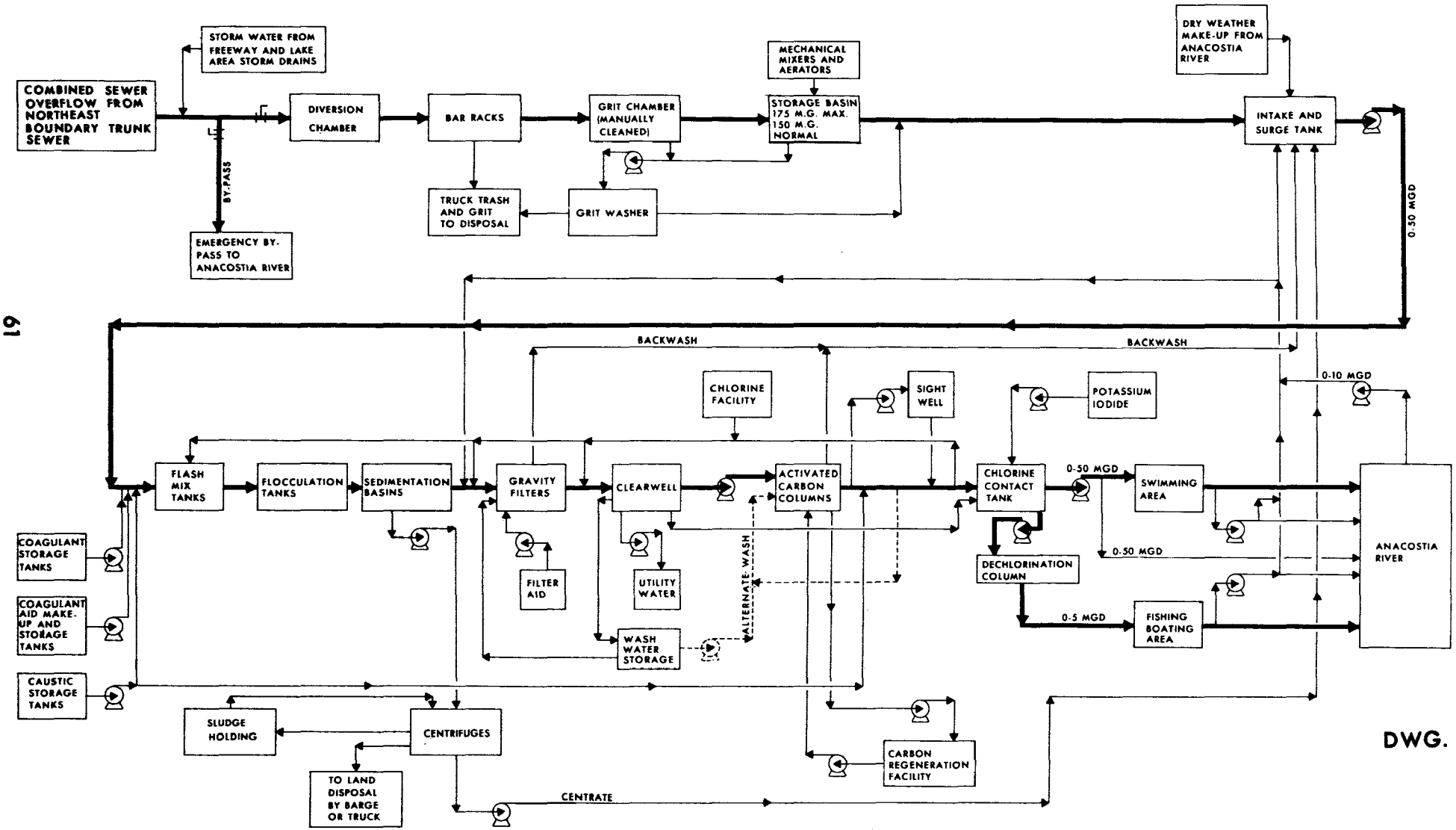

DWG. 11

FEDERAL WATER QUALITY ADMINISTRATION
KINGMAN LAKE DEVELOPMENT
WATER RECLAMATION FACILITY
HYDRAULIC PROFILE

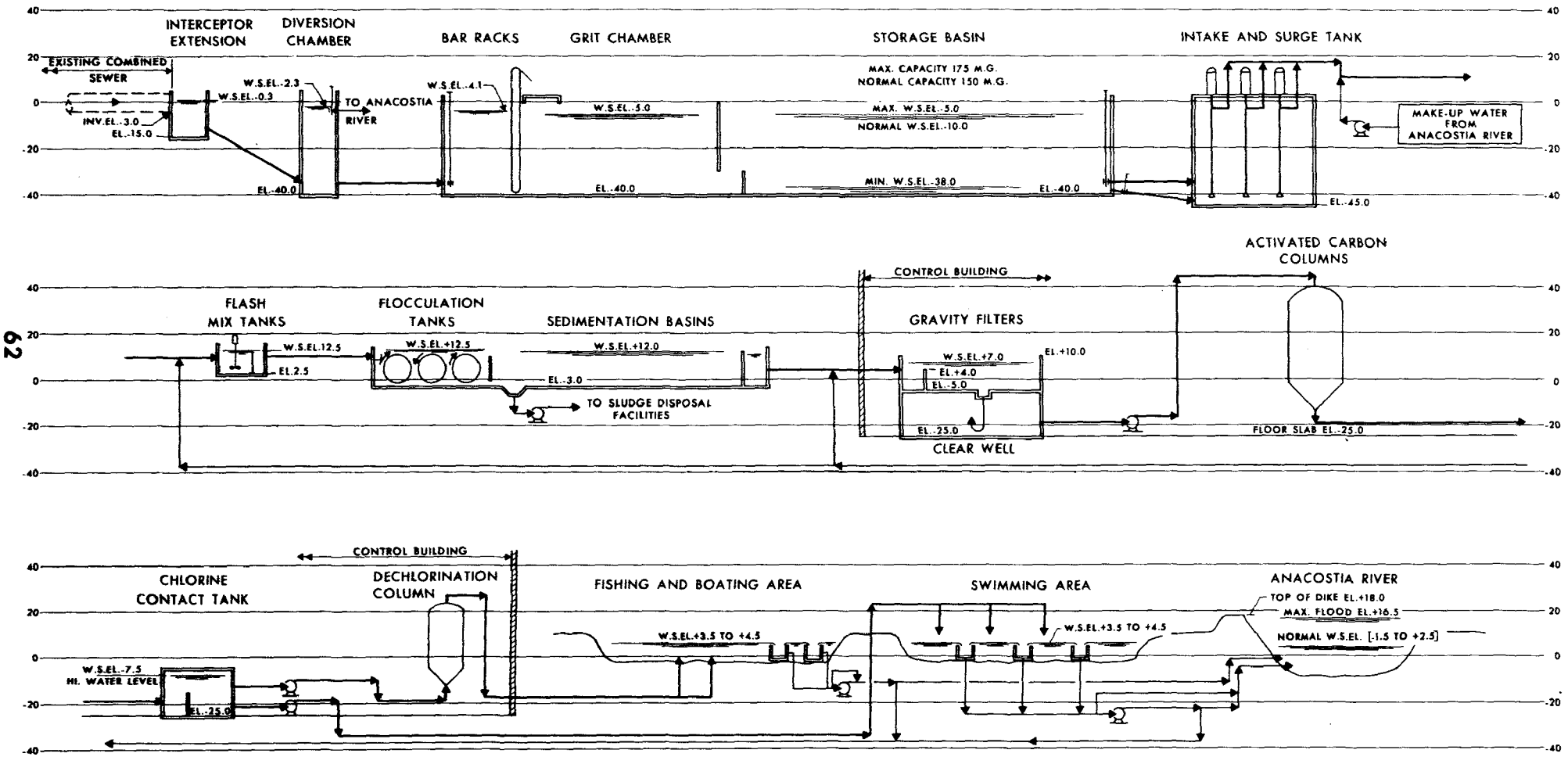

NOTE: ALL ELEVATIONS REFER TO THE D. C. DATUM, WHICH IS 3.7 FEET ABOVE THE USC&GS MEAN SEA LEVEL DATUM.

DWG. 12

The wastewater passing through the trash racks will enter the grit chamber section of the storage basin. The grit chamber will be designed to allow grit and heavy material to settle out in a relatively confined area, in order to prevent solids deposition in the main part of the storage basin. This chamber will be designed to have a detention time of less than three minutes at the peak flow rate of 4,500 cfs. The chamber will have approximate dimensions of 150' by 500', with a partition wall providing approximately ten feet SWD before the wastewater from the combined sewers overflows into the main storage area. The grit and heavy organics remaining in this basin after the wastewaters have been removed will be flushed with high pressure hoses to a common area for removal. Lift pumps will be provided in this basin to pump the heavy grit and organic material to centrifugal cyclone degritting facilities to separate the grit from the organic material. The grit will be hauled away, and the organic material in solution will be discharged to the surge tank at the influent to the wastewater reclamation plant.

Wastewater overflowing the grit chamber will enter the main storage basin. This basin will provide a maximum capacity of 175,000,000 gallons at a maximum liquid depth of thirty-five feet. A combination of bridge-mounted mixers and floating aerators will be provided in this basin to maintain an aerobic system as well as to provide mixing. The total storage basin, including the grit chamber section, will be covered; most of the area above the basin will be designed to allow for parking, while a portion of the area will be under the elevated highway. Air enclosed in the storage basin above the water level will be displaced by natural ventilation with at least one displacement per hour. The need for odor-control facilities has not been established and should be evaluated as part of the detailed engineering design. However, monies for ozone facilities have been included in the current estimates in the event further investigation indicates that they are needed.

Wastewater from the storage basin will enter an intake surge tank. Backwash waters from the mixed-media filters and the activated carbon columns, as well as centrate from the centrifuges and spent carbon slurry water underflow from the dewatering screens, will be discharged into this tank.

Wastewater pumped from the intake surge tank will be divided equally between two parallel sets of flash-mix tanks, flocculation tanks, and sedimentation tanks. The flash-mix tanks will be designed to provide a detention time of approximately 1.7 minutes at the design flow of 50,000,000 gallons per day. Coagulant, coagulant aid, and caustic storage will be provided, and the chemicals will be added ahead of the flash-mix tanks as required. The coagulant could be any one of a number of inorganic chemicals, and the coagulant aid would be an organic polymer. After passing through the flash-mix tanks, wastewater will proceed to the flocculation tanks, where a detention time of approximately 16.8 minutes will be provided at the design flow rate. Flocculation in these tanks will be accomplished by three rows of horizontal mixers. After flocculation, the wastewater will proceed to the

sedimentation tanks, (detention time approximately 108 minutes; design overflow rate approximately 1,480 gallons/day/sq.ft.). The two sedimentation tanks will have fifteen feet SWD, which will allow for some sludge storage capacity.

Sludge dewatering and disposal from the two sedimentation tanks will be accomplished by on-site sludge dewatering facilities consisting of ten basket centrifuges followed by storage units for the (approximately) six percent sludge. Approximately 130-150 Tons/day of sludge (dry solids basis) would require disposal. There are two sludge disposal alternatives available: pump the six percent sludge directly to a barge; or return to the basket centrifuges for further dewatering to fifteen percent and convey to trucks for disposal. Pilot-scale centrifugation studies should be conducted in the next phase of engineering to confirm the process design assumptions made in Phase I.

Ultimate sludge disposal during the first two years of operation can be accomplished at the Dyke Marsh area. This disposal area, however, will not be able to accommodate spoil material for any significant length of time. A survey of potential future spoil areas must be initiated at the same time engineering design of the project begins. This will allow approximately four years to develop additional sites for sludge disposal. Any concerted effort to develop future sludge disposal sites in the vicinity of Washington, D.C. should include considerations for sludge disposal from the District of Columbia's Blue Plains Water Pollution Control Facility.

Clarified supernatant from the sedimentation basin will overflow into a channel that will convey the wastewater by gravity to ten multi-media filters. These filters will be designed with media of different specific gravities (anthracite, sand, garnet, and gravel) for an average gravity flow rate of 5 gpm/sq.ft. A maximum hydraulic capacity of 10 gpm/sq.ft. will be provided. The filter backwash system is designed to clean such filter once per day at a rate of 20 gpm/sq.ft. for a period not to exceed 10 min/day. Surface wash will be provided on each filter. Backwash water for the filters will be stored in an elevated storage tank with a capacity of 250,000 gallons. Filtered water will discharge to the clearwell located directly below the filters.

Filtered water from the clearwell will be pumped to activated carbon columns for the removal of soluble organics. Fourteen single-stage units, plus two stand-by units, will provide a surface loading of 6 gpm/sq.ft. and a contact time of approximately twenty-nine minutes at the design flow of 50,000,000 gal/day. These activated carbon columns will contain 8 x 30 mesh granular activated carbon.

Effluent from the activated carbon column will discharge to the chlorine contact tank, located adjacent to the clearwell, where the treated water will have a detention time of approximately twenty minutes at the design flow rate. Bacteria and virus control will be maintained with chlorine and iodine. Three chlorinators, each with a capacity of 4,000 lbs/day,

as well as one evaporator will be provided. Chlorine will be stored in one-ton containers, and an area will be provided for storage and handling of twelve containers on the floor and four on the scales. The chlorine feed facilities will be designed to provide sufficient chlorine for break-point chlorination. Iodine feed facilities will be provided for the addition of potassium iodide in order to maintain residual iodine in the effluent.

Effluent from the chlorine contact tank will be pumped to two different facilities. The major flow (approximately 45-50 mgd) will be pumped to the bathing lake and will be distributed so as to obtain the greatest dispersion to the swimming areas of the lake. A minimum amount of forward flow (0 to 5 mgd) will be pumped from the chlorine contact tank to a dechlorination column. This dechlorination column will contain 14 x 40 mesh granular activated carbon, which will be hydraulically loaded at a rate of 2 gpm/sq.ft. After removing the chlorine residual, the effluent will discharge to the fishing and boating lake.

Effluent from both the fishing and bathing lakes can be discharged either to the Anacostia River or be recycled to the wastewater reclamation facility. Recycle to the wastewater reclamation facility can be directed either to the head end of the storage basin, to the flash-mix tanks, or directly to the multi-media filters. Normally, this recycle flow will go directly to the multi-media filters and then to the remainder of the treatment facility.

A sightwell will be provided as a part of the clearwell, to allow visitors to the plant to observe the water going to the swimming and fishing lakes.

Carbon regeneration facilities will be provided to regenerate carbon on-site. When the instrumental controls of the individual carbon units indicate that the bed of activated carbon has been spent, the plant operator will take that carbon column off stream and regenerate it. The spent carbon will be discharged to a spent carbon slurry tank, where a carbon slurry will be held and then pumped to the top of a stationary dewatering screen. Carbon will gravity dewater to approximately four percent solids and then discharge into the regeneration furnace. The underflow liquid from the dewatering screens (as well as the water from the wet scrubber) will be pumped back to the intake surge tank. A six-hearth regeneration furnace, capable of handling 160,000 lbs/day of spent activated carbon, will be provided. This furnace will include wet scrubbers for air pollution control, drive mechanism, duct work, induced draft and combustion air fans, and burner and cooling fans. Regenerated carbon from the furnace will discharge to a carbon quench tank and then be pumped to an empty carbon column, with the quench water coming from the clearwell.

A fresh carbon storage tank, sized for approximately one month's capacity based on daily operation and make-up of spent activated carbon,

will be provided. A screw feeder will discharge fresh carbon from the storage tank at a controlled rate to a slurry pump, where the carbon will be transported to an empty carbon column.

Make-up water to balance evaporative losses (estimated to be 200,000 gallons per day) during periods of dry weather will be pumped from the Anacostia River to the covered storage basin.

Seasonal Operation

The operation of the treatment and recreational facilities will vary during the year. While the occurrence of rainfall is more likely in certain times of the year, it can occur at practically any time. On the other hand, the recreational aspects of the facility, namely swimming, boating, and fishing, will be active only at certain times of the year. Consequently, since the operation of the water reclamation facility is expected to vary, discussion of the operation has been divided into dry and wet weather and into swimming and non-swimming phases.

During and shortly after a heavy rainfall, overflow from the combined sewer will enter the storage facility, where it will be held for treatment. Based upon the maximum capacities of the storage lake and of the water reclamation facility, this overflow can be treated in less than four days. During these peak treatment rates, the normal operating staff will have to be supplemented by an auxiliary operating staff.

After the wastewater in the storage lake has been drawn down to a low level, the reclamation plant throughput rate can be significantly reduced, operated at a low rate using make-up water from the Anacostia River, or even can be shut down. The normal operating staff should be capable of handling this operation. Grit and settled material will be removed as necessary when the storage tank is empty, which is feasible during an extended dry-weather period (Normally, a level of about one foot of water would be maintained in the storage between storms, to prevent the emission of undesirable odors). The auxiliary operating staff can perform this function.

Operation of the facilities will vary between swimming and non-swimming seasons. This assumes that the boating-fishing facility will be operated only during the swimming season. If boating and fishing activities have different season than swimming, the overall schedule will have to be modified. The swimming season is generally established to run between Memorial Day and Labor Day. During this period, the reclamation plant will have to handle 50 mgd continuously. If there is wastewater overflow, this will be treated and discharged to the swimming lake, with a small portion of the flow dechlorinated and discharged to the boating lake. If there is no wastewater overflow to treat, then recycle from the swimming lake supplemented by a small recycle flow from the boating lake will be taken back to the reclamation plant. Anacostia River water will be used to make up evaporative losses. Operation during the dry-weather swimming

season should be able to be handled by the normal operating staff. The auxiliary operating staff will again be required after periods of combined sewer overflow. During the non-swimming season, treated effluent may be discharged to the Anacostia River rather than to the swimming or boating lakes, if determined by the operator to be feasible.

Manpower Requirements

The general philosophy in staffing the facility proposes that a permanent full-time crew be provided to operate and maintain the facility on a year-round basis. This staff will also be adequate to run those portions of the plant which are required on a continuous basis during summer months and will provide most of the manpower for peak operation periods. An auxiliary operating staff will supplement the permanent staff after periods of heavy rainfall when the total plant facilities are in full operation. The auxiliary staff would generally be required for only three or four days at a time.

The permanent operating staff will include personnel necessary for round the clock maintenance on all the facilities and for operation of those facilities that are continously operated. The facilities that will be continuously operated (at least during the swimming season) include the filters, carbon columns, and chlorination system. The recommended staff is as follows:

1. One superintendent with education, training, and experience to be qualified for an engineering management position.

2. Two laboratory staff people, one of whom must be a competent chemist; the second should be a qualified chemical technician.

3. Four shift operators capable of assuming responsibility for control of unit operations and directing the work of assistant operators and laborers; these individuals should have experience in the field of water and/or wastewater treatment.

4. One maintenance foreman and two maintenance specialists capable of performing routine repair work in the mechanical and electrical (including instrumentation) fields; they should be experienced people but not necessarily in the field of water or wastewater treatment.

5. Four assistant operators capable of executing routine operational procedures (i.e. equipment startup, filter backwash, preparing chemicals, etc.) under the guidance of the shift operator; these people should be considered as potential future shift operators.

6. Four laborers, to provide assistance to the operators and maintenance people as needed, and to handle general housekeeping chores within the plant; consideration should be given to possible training of these people for future operator responsibility.

During periods of storm flow (during and immediately after storms), and while the storage basin is being drained, additional personnel will be required for operation of the clarifiers, centrifuges, bar-rack facilities, and chemical make-up and feed facilities. While the grit collection basins will be used during storm periods, cleaning will not be necessary. The permanent staff can clean the basin when time is available, or the auxiliary staff can be used an additional day or two for this cleaning. Personnel from the Blue Plains Staff on an overtime or tempoary assignment basis appears to be most feasible source of the supplemental manpower. This additional manpower is recommended as follows:

Six assistant operators capable of assuming tasks with coagulation and sedimentation, centrifugation, and bar rack cleaning and operation.

During the peak periods, two such people will be required per shift, 3 shifts per day, for periods up to 4 days. Full-time coverage of the centrifuge operation is anticipated, with general assistance provided in the other areas.

SUMMARY OF MAJOR EQUIPMENT SIZES

Screening Building

Bar Rack

Design Flow Rate	4,500 cfs
Velocity	1.5 fps
Bar Spacing	2 inches
Number of Chambers	One
Chamber Dimensions	
Width	100'
Depth	30' SWD
Trash Removal	Overhead crane and traversing trash rake

Storage Lake

Grit Chamber

Design Flow Rate	4,500 cfs
Detention Time, minutes	3
Main Dimensions	
Length	500'
Width (average)	150'
Depth	10' SWD
Capacity	750,000 cu.ft.
Grit Collection	Flush to slurry pumps, pump to degritting facilities, truck to disposal
Degritting Facility	
Type	Cyclone
Capacity	2 at 1,000 gpm each

Storage Basin

Number of Basins	One
Capacity, approximately	175×10^6 gallons, maximum
Surface Area, approximately	675,000 sq.ft.
Depth	
Maximum	35'
Minimum	3'

Mixers

Type	Bridge mounted
Number of Mixers	12
Capacity, each	100 HP

Aerators

Type	Floating
Number of Aerators	8
Capacity, each	100 HP

Surge Tank

Capacity	600,000 gallons
Maximum Depth	40' SWD

Lift Pumps

Number	Three
Capacity	17,500 gpm each

Flocculation-Clarification Facilities

Flash Mix Tanks

Number of Units	Two
Capacity, each	30,000 gallons
Main Dimensions	
Length	20'
Width	20'
Depth	10' SWD
Freeboard	2'
Detention Time	1.7 minutes
Mixer, each tank	1 at 1 HP
Materials of Construction	Concrete

Flocculation Tanks

Number of Units	Two
Capacity of each	292,500 gallons
Main Dimensions	
Length	40'
Width	65'
Depth	15' SWD
Freeboard	2'
Detention Time, each	16.8 minutes
Mixers, each tank	3 rows at 7.5 HP
Materials of Construction	Concrete

Sedimentation Basins

Number of Units	Two
Capacity, each	1.9 million gallons
Main Dimensions, each	
Length	260'
Width	65'
Depth	15' SWD
Freeboard	2'

Detention Time, total	108 minutes
Design Overflow Rate	1,480 gpd/sq.ft.
Design Weir Loading	20,000 gpd/lin. ft.
Materials of Construction	Concrete
Sludge Removal	Positive Displacement
Sludge Pumps	
Number of Pumps, each unit	Two
Capacity, each	1,000 gpm
Type	Positive Displacement

Coagulant Facilities

Bulk Storage Tank

Number of Units	Three
Main Dimensions	
Diameter	12'
Height	15'
Capacity	12,000 gallons
Materials of Construction	Coated Steel
Pumps	
Number	Two
Capacity	250 gpm, each
Control	Variable speed and variable stroke

Coagulant Aid Facilities

Makeup Tank

Number of Units	Two
Capacity, each	1,200 gallons
Materials of Construction	Coated steel

Tank Agitator

Number of Units	One
Horsepower	One

Dilution and Feed Tank

Number of Units	One
Main Dimensions	
Diameter	12'
Height	15'
Capacity	12,000 gallons
Materials of Construction	Coated steel

Tank Agitator

Number of Units	One
Horsepower	Two

Polymer Pumps	
Number of Units	Two
Capacity, each	100-1,000 gph
Type	Diaphragm metering with variable speed and stroke
Caustic Storage Tank	
Number of Units	Three
Capacity, each	12,000 gallons
Pumps	Two
Type	Metering with variable speed and variable stroke
Control	pH indicator controller

Sludge Disposal Facilities

Sludge Volume	
Maximum	2.6-3.1 mgd
Minimum	0
Dry Solids	
Maximum	130-150 tons/day
Minimum	0
Centrifugation	
Number of Units	10
Size	30" x 48"
Type	Basket
Centrate	To surge tank
Sludge	Convey to hopper, truck to disposal

Multi-Media Filters

Type	Mixed media, gravity flow
Number of Units	10
Filtration Rate	5 gpm/sq.ft.
Flow Control	Rate of flow control and loss of head control
Area Required, each	700 sq.ft.
Main Dimensions, each	
Length	38'
Width	19'
Depth, total	12'
Freeboard	2'
Maximum Filter Head	5'6" over bed
Maximum Backwash Rate	20 gpm/sq.ft.
Backwash Cycle	1-10 min. wash/day
Backwash Control	Rate of flow controller
Number of Surface Washers/Filter	Two/Filter
Type	Circular, rotating surface washers
Capacity, each	180 gpm at 150 psi

Launders/Filter	5
Material	Fiberglass
Filtration Media	Micro-floc No. MF 186 or equivalent
Media Depth, each	42" with graded specific gravity
Underdrains	Ceramic tile
Backwash Storage	Elevated tank
Type	Pedestal sphere
Capacity	250,000 gallons
Dimensions	
Diameter of sphere	40'
Height above ground	100'
Fill Pumps	2 at 2,000 gpm, each
Clearwell	
Location	Directly below filters
Number of Units	One
Main Dimensions	
Length	275'
Width	25'
Operating Water Depth	17.5' maximum
Freeboard	1.5'
Operating Volume	900,000 gallons
Construction	Concrete
Pump Station	
Number of Pumps	Three
Capacity	17,500 gpm, each

Activated Carbon Columns

Number of Operating Units	14 single stage
Number of Standby Vessels	Two
Total Number of Vessels	16
Hydraulic Loading	6 gpm/sq.ft.
Contact Time (empty vessel)	29 minutes
Carbon Specification	8 x 30 mesh granular
Main Vessel Dimensions, each	
Diameter	23'
Carbon Depth	23'
Freeboard	7' expansion plus 2'
Backwash Rate for 30 percent Expansion	17 gpm/sq.ft.
Design Pressure (ASME Code)	150 psi
Materials of Construction	Steel
Backwash Pumps	Two
Capacity, each	7,000 gpm

Chlorination Facilities

Chlorinators

Number of Units	Three
Capacity, each	4,000 lbs/day
Type	Automatic (closed loop)
Evaporator	One

Chlorine Storage (ton containers)

Number of Units	12 on floor 4 on scale

Chlorine Contact Tank

Number of Units	One
Main Dimensions	
Length	275'
Width	19'
Depth	17.5' SWD
Freeboard	1.5'
Capacity, total	700,000 gallons
Detention Time	20 minutes at 50 mgd

Iodine Feed Facilities

Tank Capacity	1,000 gallons
Pump Capacity	2 at 40 gph, each
Materials of Construction	Coated steel

Pump Station (to swimming lake)

Number of Pumps	Three
Capacity, each	17,500 gpm

Dechlorination Vessel

Flow	To boating lake
Rate	5 mgd
Number of Vessels	One
Hydraulic Loading	2 gpm/sq.ft.
Carbon Volume	1,810 cu.ft.
Main Dimensions	
Diameter	12'
Carbon Height	16'
Freeboard	4'
Activated Carbon	14' x 40 mesh granular

Pump Station (to boating lake)

Number of Pumps	Two
Capacity, each	3,500 gpm

Pump Station (No. 1)

Origin	Swimming Lake
Destination	Reclamation Plant
Number of Pumps	Three
Capacity, each	17,500 gpm

Pump Station (No. 2)

Origin	Boating Lake
Destination	Reclamation Plant
Number of Pumps	Two
Capacity, each	3,500 gpm

Pump Station (No. 3)

Origin	Anacostia River
Destination	Reclamation Plant
Number of Pumps	Two
Capacity, each	3,500 gpm
Requirement	Dry weather make-up

Carbon Regeneration

Spent Carbon Slurry Tank

Number of Units	One
Capacity	200 gallons
Materials of Construction	Steel

Slurry Pumps

Number of Units	Two
Capacity, each	200 gpm

Stationary Dewatering Screen

Number of Units	One
Capacity	200 gpm of 10 percent slurry of 8 x 30 mesh activated carbon
Materials of Construction	Stainless screen, steel tank
Sump Capacity	1,000 gallons
Pump Capacity	2 at 200 gpm, each

Activated Carbon Regeneration Furnace

Number of Units	One
Type	Multiple Hearth
Duty	24 hours/day
Feed Material	Gravity-dewatered spent activated carbon
Feed Rate	160,000 lbs/day
Main Dimensions	
Diameter	20'
Number of Hearths	Six
Other Equipment with Furnace	Wet scrubber, drivers, ductwork, induced draft fan, combustion air fan, after burner, cooling fan

Fresh Carbon Storage Tank

Number of Units	One
Capacity	9,600 cu.ft. or 240,000 lbs. of carbon
Main Dimensions	
Diameter	23'
Height	25'
Carbon	8 x 30 mesh

Carbon Screw Feeder

Number of Units	One
Capacity	
Peak	200 lbs/min.
Average	10 lbs/min.

Carbon Slurry Tank

Number of Units	One
Capacity	200 gallons
Slurry Pumps	2 at 200 gpm, each

KINGMAN LAKE WATER RECLAMATION FACILITY
DETAIL PROCESS FLOW DIAGRAM
INFLUENT AND STORAGE FACILITIES

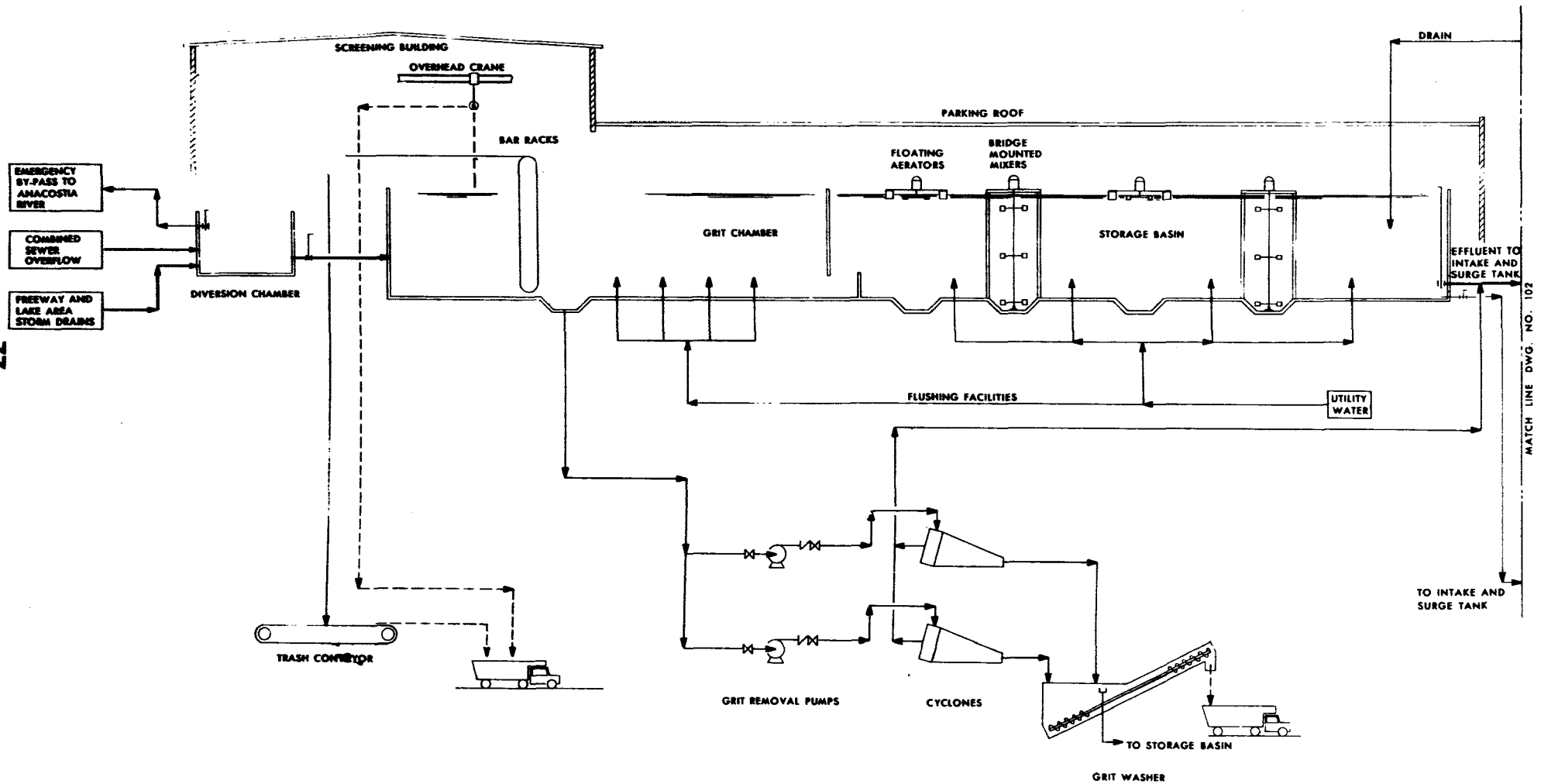

DRAWING 101

KINGMAN LAKE WATER RECLAMATION FACILITY
DETAIL PROCESS FLOW DIAGRAM
FLOCCULATION - SEDIMENTATION - SLUDGE HANDLING

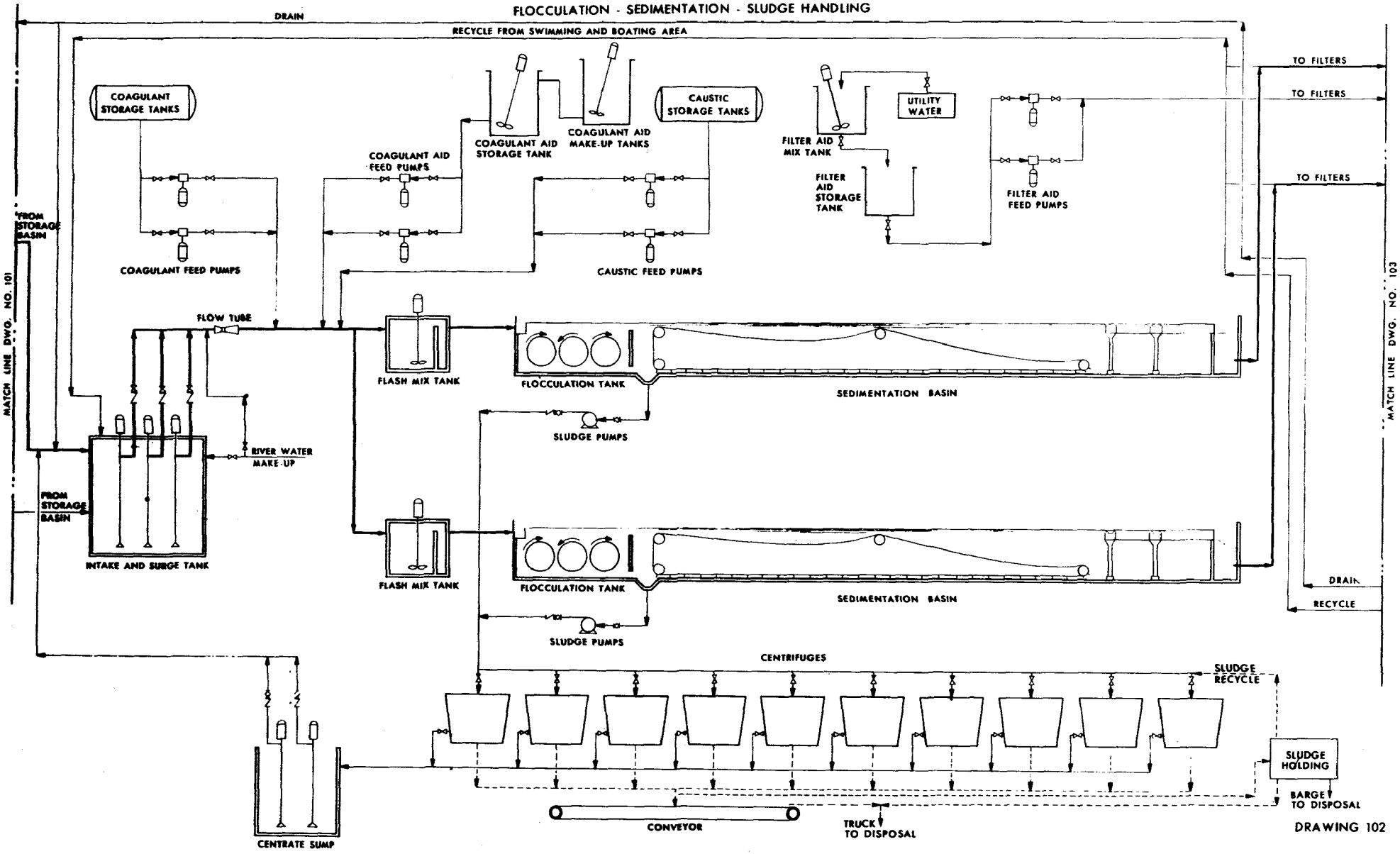

DRAWING 102

KINGMAN LAKE WATER RECLAMATION FACILITY
DETAIL PROCESS FLOW DIAGRAM
MULTI-MEDIA FILTRATION

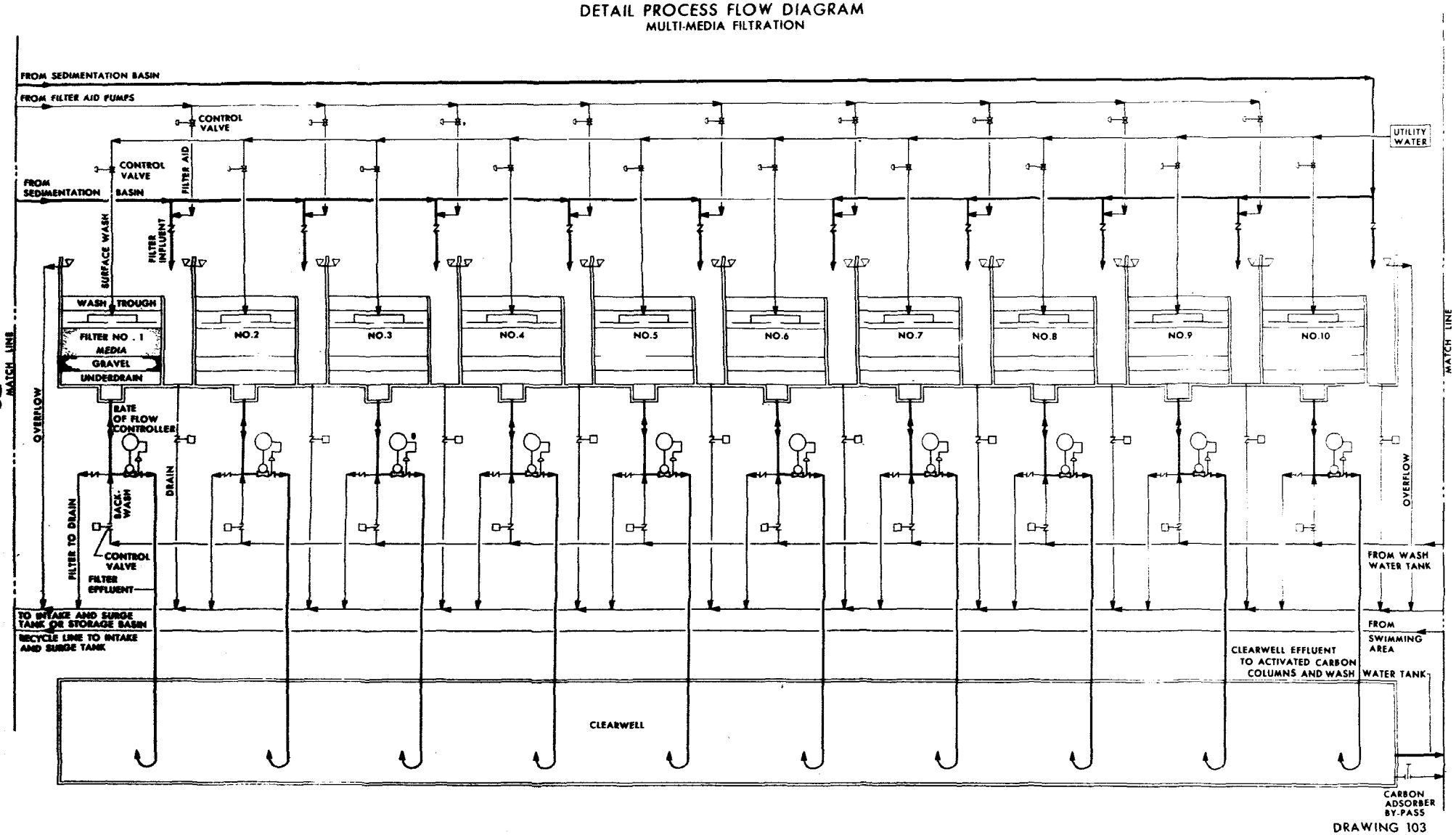

DRAWING 103

KINGMAN LAKE WATER RECLAMATION FACILITY
DETAIL PROCESS FLOW DIAGRAM
ACTIVATED CARBON ADSORBERS 1 THRU 8

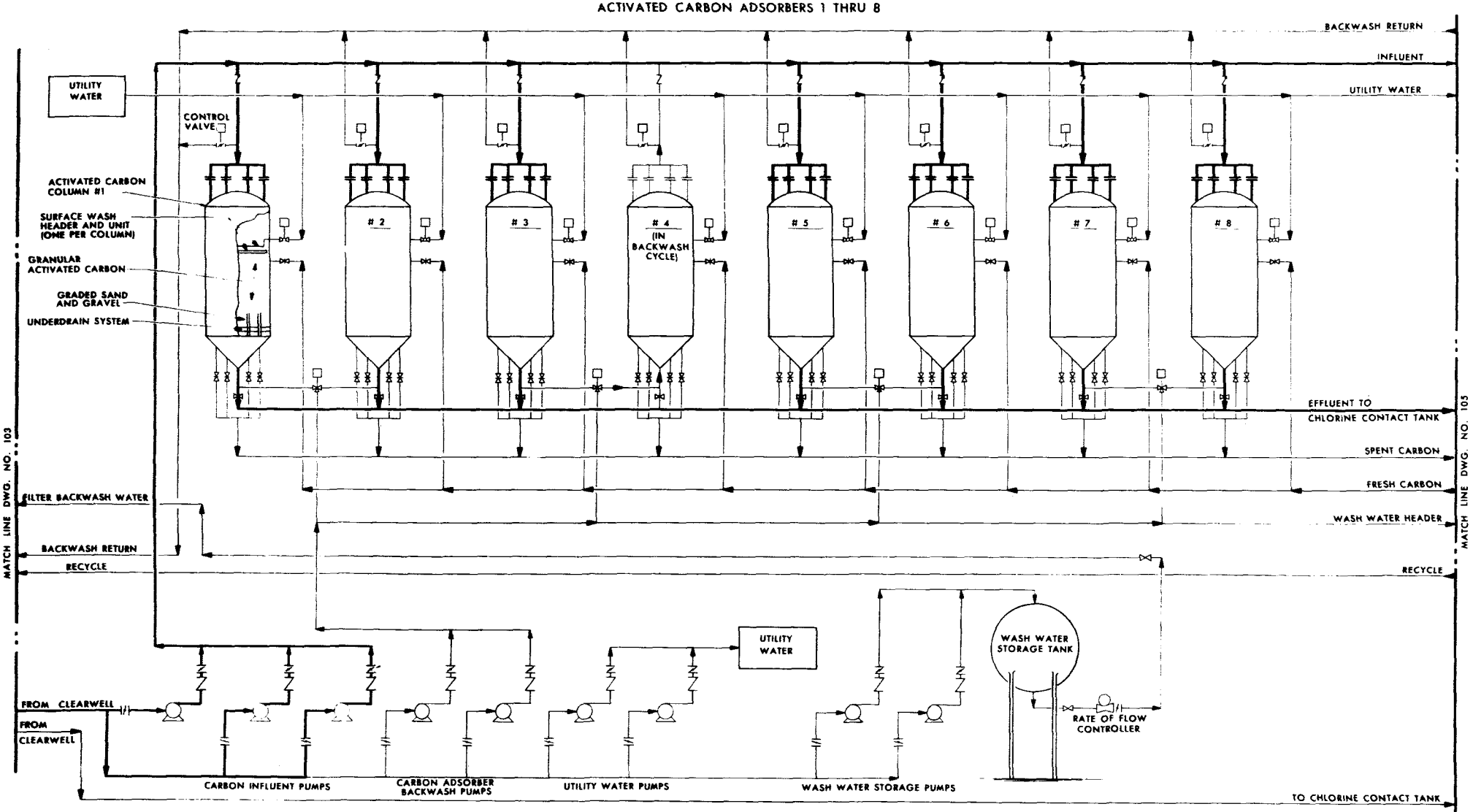

DRAWING 104

KINGMAN LAKE WATER RECLAMATION FACILITY
DETAIL PROCESS FLOW DIAGRAM
ACTIVATED CARBON ADSORBERS 9 THRU 16 AND DISINFECTION SYSTEM

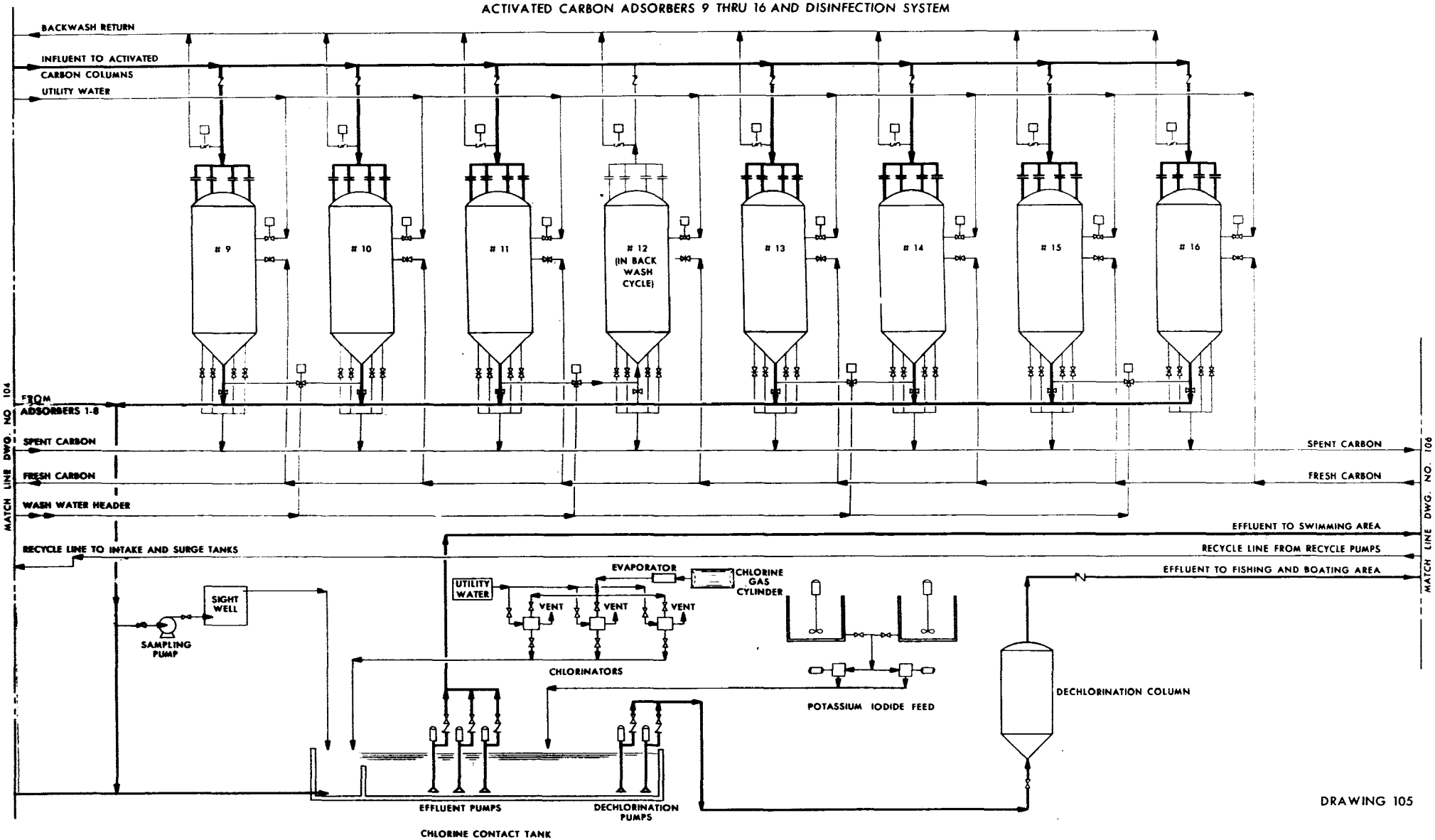

DRAWING 105

KINGMAN LAKE WATER RECLAMATION FACILITY
DETAIL PROCESS FLOW DIAGRAM
LAKE AREA DISTRIBUTION AND RECYCLE SYSTEMS

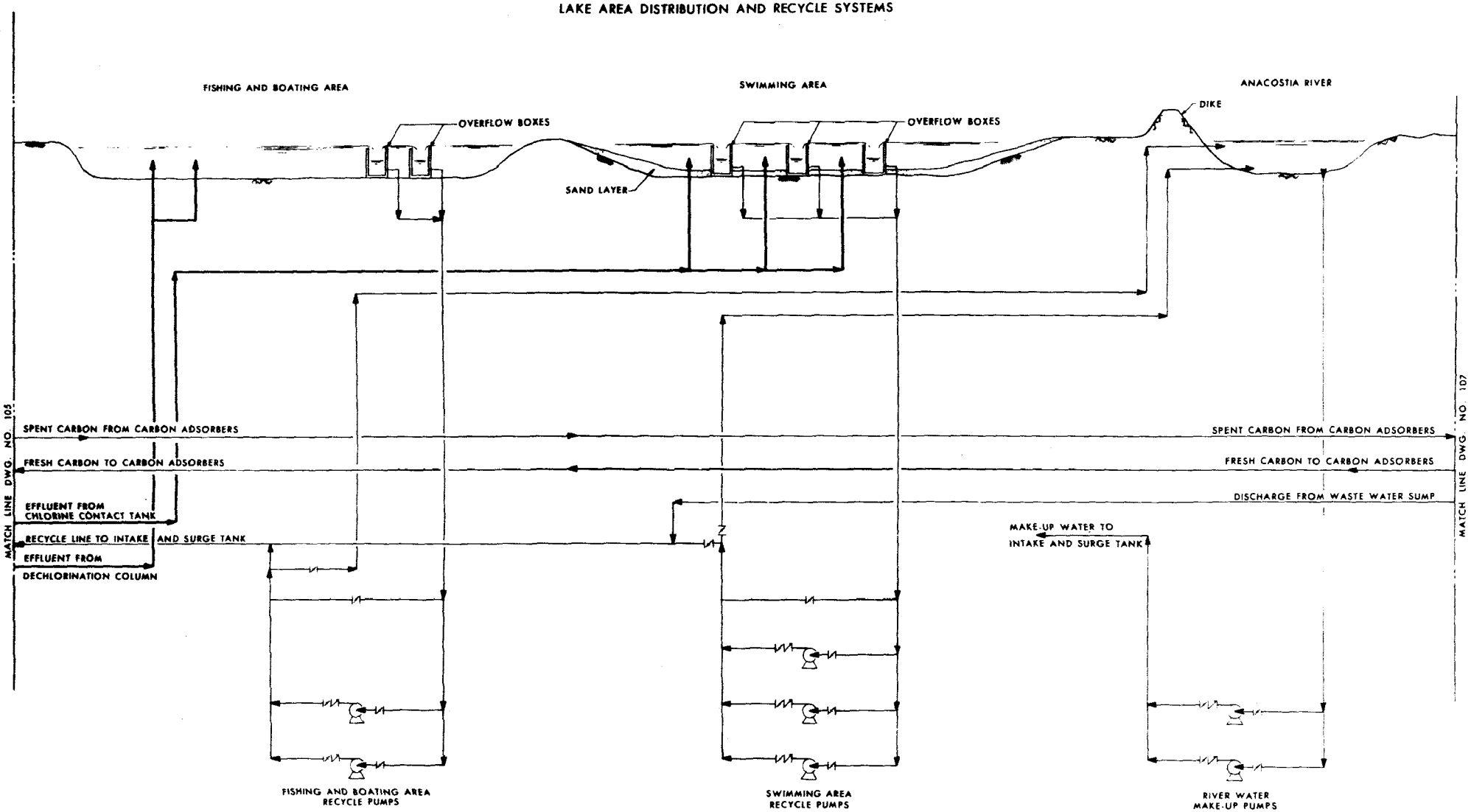

DRAWING 106

KINGMAN LAKE WATER RECLAMATION FACILITY
DETAIL PROCESS FLOW DIAGRAM
CARBON REGENERATION SYSTEM

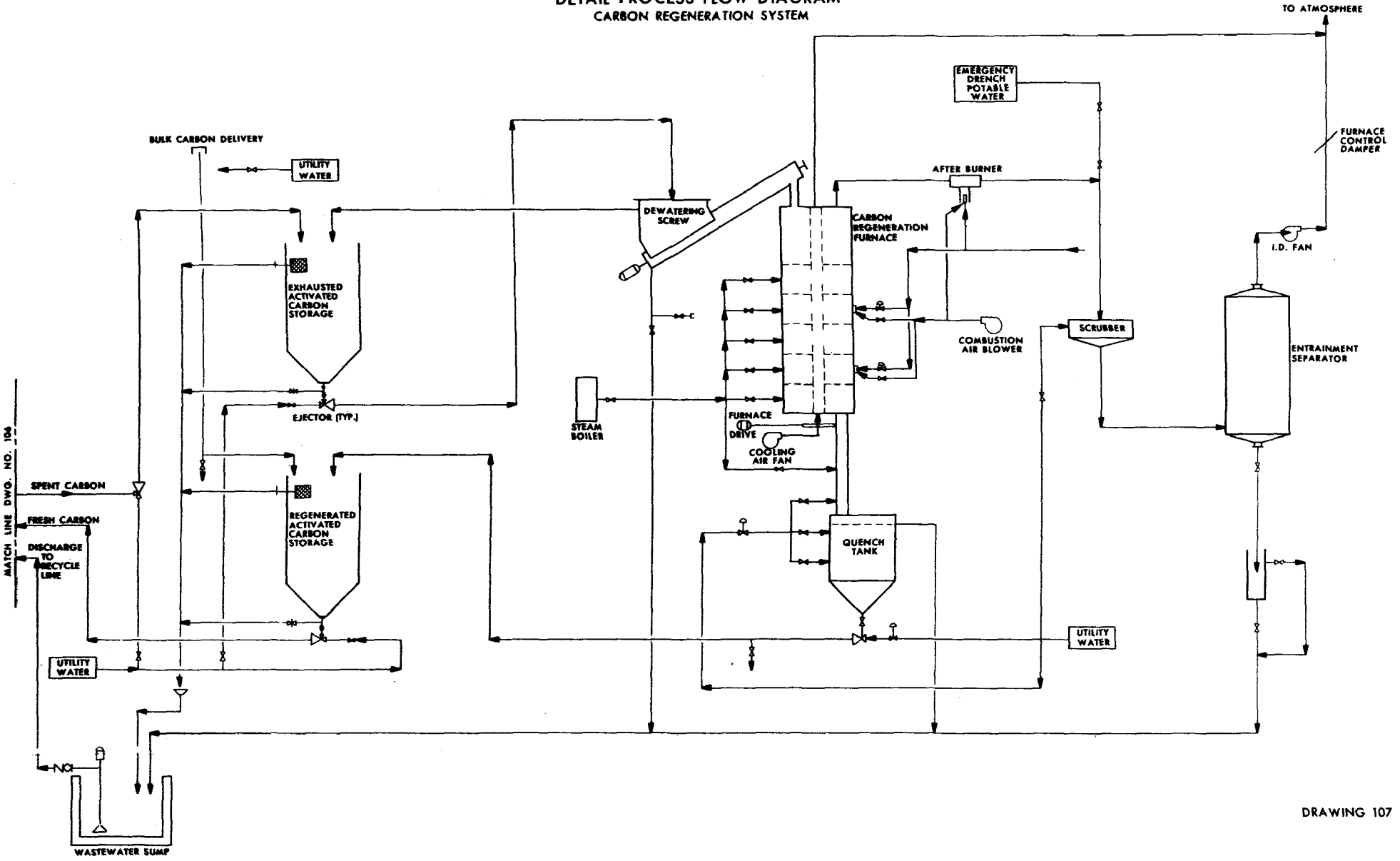

DRAWING 107

SECTION VII

COST ESTIMATES

Capital Costs

Capital cost estimates have been prepared for various combinations of surface storage and water reclamation plant capacities. All cost estimates have been based upon current construction costs for similar facilities and, where applicable, upon preliminary quotations from equipment manufacturers. A construction cost and escalation contingency of 15 percent has been included in all estimates. The estimates as provided, considering no significant deviation from current trends, should be adequate through mid 1971. The Engineering News Record Construction Cost Index of 1320 was used to update bid prices of current tunnel construction projects in Chicago and California. Engineering, Surveying, Soils and Foundation Studies, and Administrative Costs are included in these cost estimates. Administrative costs are intended to account for the Federal Government's administration of the Engineering and Construction contracts involved.

Table 15

Alternative Construction Costs

Storage Capacity million gallons	Water Reclamation Plant Capacity mgd	Cost
90	25	$33,440,000
175	25	38,540,000
175	50	42,900,000
235	25	43,680,000
235	50	48,060,000

Table 15 presents the total construction costs for the various alternatives. The type of construction in all alternatives is similar, and the differences in costs generally represent the differences in either storage or treatment plant capacity. A breakdown of the estimated total project costs for the 175 million gallon storage capacity-50 mgd treatment plant capacity alternative is presented in Table 16.

Table 17 presents the estimate summary for the Tunnel Construction for surcharge relief and combined sewer overflow storage. The cost for mined storage has been estimated in a previous ROY F. WESTON Combined Sewer Study for Washington, D.C.; mined storage for 242,000,000 gallons was estimated at approximately $35,400,000 (ENR 1300), including the associated shafts and pumping station; excavation unit cost was estimated at approximately $19.00/cubic yard.

Table 16

Preliminary Estimate

SUMMARY OF PROJECT COSTS[1]
175 MG Storage, 50 mgd Treatment Facility

Influent Channel and Diversion Chambers		
Excavate and Backfill	$ 205,000	
Reinforced Concrete	2,545,000	
Piling	750,000	
Hydraulic Gates	385,000	
Metals	35,000	
Sub-Total		$ 3,920,000
Screen and Grit Chamber		
Reinforced Concrete	$ 1,585,000	
Building	115,000	
Equipment	205,000	
Degrit Equipment and Flushing	155,000	
Sub-Total		$ 2,060,000
Storage Basin - Lake No. 1		
Dredging	$ 978,000	
Excavate and Fill	674,000	
Slurry Trench	5,000,000	
Concrete Lining	498,000	
Parking Roof	3,894,000	
Ventilation System	50,000	
Aeration System	668,000	
Lighting	88,000	
Sub-Total		$11,850,000
Treatment Plant and Control Building		
Excavation and Foundations	$ 1,221,000	
Reinforced Concrete	2,695,000	
Gravity Filters and Elevated Storage	2,011,000	
Carbon Columns	3,150,000	
Pumps	218,000	
Dechlorination Facility and Deodorize	100,000	
Chemical Feed	151,000	
Flash Mix-Flocculation and Settling Equipment	313,000	
Centrifuge Equipment	630,000	
Sludge Storage Hopper	20,000	
Heating-Ventilating and Plumbing and Interior	525,000	
Sub-Total		$11,304,000
Yard Piping		
Pipe Installed	$ 1,020,000	
Pumping Station	130,000	
Sub-Total		$ 1,150,000
Lakes Nos. 2 and 3		
Dredging	$ 2,100,000	
Excavation and Fill	120,000	
Sand - Lake No. 3	50,000	
Dams	500,000	
Bath House Facilities	940,000	
Sub-Total		$ 3,790,000
Site Work		100,000
Interceptor Sewer		730,000
Electrical		2,000,000
Instrumentation		400,000
Project Cost Sub-Total		$37,304,000
Construction Contingency and Escalation - 15 percent		5,596,000
Sub-Total Construction Costs		$42,900,000
Engineering, Surveying, Soils and Foundation Studies		2,200,000
Federal Government Contract Administration Costs		100,000
TOTAL PROJECT COSTS		$45,200,000

[1]Engineering News Record Construction Cost Index = 1320

Table 17

Estimated Cost Summary

Tunnel Construction for Surcharge Relief and Storage

Tunnel at $818.00/LF[1]	$10,585,000
Pumping Station	2,383,000
Shaft Construction	
Excavation	835,000
Concrete Work	2,855,000
Piping and Manholes	164,000
Boring and Jacking	187,000
Sluice Gates and Armor Plating	156,000
Sub-Total	$17,165,000
Construction and Escalation Contingency	2,574,000
TOTAL	$19,739,000

[1]Based on actual costs of a 12-inch tunnel project at ENR 1142, adjusted for increase in tunnel diameter to 30 inches and updated to ENR 1320. Tunnel storage capacity (not including shafts) approximately 63,500 cu.ft.

The excavation unit cost is a significant factor in any estimate of a mined storage project, because excavation is the major cost item and because the unit cost varies with the amount of excavation involved. For example, in the study cited above, the unit excavation cost was estimated over a range of $15 to $22 per cubic yard.

The cost of mined storage for volumes of 115, 225, and 285 million gallons are shown in Table 18. These cost estimates will allow a direct comparison with the surface storage facilities at the comparable volumes.

Table 18

Comparable Mined Storage Costs[1]

Sub-Surface Storage	Excavation Unit Price	Cost of Storage	Shafts and Pump Station	Total
million gallons	$/cubic yard	millions of dollars	millions of dollars	millions of dollars
115	22.00	13.9	6.2	20.1
225	20.00	27.2	6.2	33.4
285	19.00	34.4	6.2	40.6

[1]Including 15 percent Construction and Escalation Contingency.

Operating Costs

Annual operating costs have been prepared for the various alternatives. As was noted with the construction costs, the annual operating costs for the various alternatives are similar, and the differences generally represent the differences in facility sizes.

Table 19

Alternative Annual Operating Costs

Storage Capacity	Water Reclamation Plant Capacity	Costs
million gallons	mgd	
90	25	$1,247,000
175	25	1,412,000
175	50	1,777,000
235	25	1,574,000
235	50	1,892,000

Table 19 presents the operating costs for all the alternatives considered, and Table 20 is a breakdown of the estimate for the 175-million gallon storage area, 50-mgd water reclamation facility.

Table 20

Preliminary Estimate

SUMMARY OF ANNUAL OPERATING COSTS
175 mg Storage, 50 mgd Treatment Facility

Administration		$ 100,000
Labor		
Permanent Staff	$280,000[1]	
Auxiliary Staff	$ 15,000[1]	$ 295,000
Maintenance		
Structures	1% of $12,267,000 = $122,000	
Mechanical	4% of $ 7,951,000 = $318,000	
Piping	1% of $ 1,880,000 = $ 19,000	
Electrical and Instrumentation	2% of $ 2,488,000 = $ 50,000	$ 509,000
Utilities		
Electrical[2]	8,000 x .746 x 24 x (150 + 0.6 x 210) x $.010/KWH =	$ 395,000
Chemicals		
Chlorine	300 T/yr x $100/T = $ 30,000	
Alum	625 T/yr x $ 40/T = $ 25,000	
Polymer	12.5 T/yr x $ 1/lb = $ 25,000	
Caustic	120 T/yr x $ 40/T = $ 5,000	
Potassium Iodide	37.5 T/yr x $1.80/lb = $133,000	$ 218,000
Make-up Carbon		$ 160,000
Fuel Oil		$ 15,000
Sub-Total		$1,692,000
Operating Contingency @ 5%		85,000
Total		$1,777,000

[1] Includes overhead and benefits.

[2] Based on all power-consuming equipment operating simultaneously.

SECTION VIII

SELECTION AND COST EFFECTIVENESS OF APPROPRIATE ALTERNATIVE

Selection of Storage Capacity and Reclamation Plant Capacity

The analysis and selection of the appropriate alternative involves the measurement of the costs and benefits associated with each of the alternatives being considered. However, since 90 percent of the total capital cost of the project is directly related to pollution abatement, it is reasonable that pollution abatement be the basis for selection of the appropriate alternative.

The determination of the storage and treatment scheme with the highest cost effectiveness can be made by analyzing the capital cost expenditures versus the corresponding percentage reduction of pollution, as shown in Table 21.

Table 21

Cost Effectiveness of Kingman Lake Storage and Treatment Alternatives

Storage Basin Capacity (millions of gallons)	Water Reclamation Plant Capacity (mgd)	Effective Storage Capacity (millions of gallons)	Total Cost (millions of dollars)	Capital Cost for each Percent Reduction of Organic Loading of Storm in Millions of Dollars			
				1-Year	2-Years	5-Years	15-Years
90	25	115	14.3	0.29	0.37	0.46	0.62
175	50	225	19.3	0.19	0.24	0.32	0.42
235	50	285	22.1	0.22	0.22	0.30	0.40

As previously discussed, the relative difference among alternative storage capacities in reducing annual organic loading is minor, suggesting that the least-cost storage capacity is the attractive alternative. However, in reference to the abatement of pollution, discussions in preceding sections have established that significant consideration must be given to the reduction of loadings of the intense storms, and not just to the reduction of annual loadings. Table 21 presents the cost effectiveness of alternative storage basin-reclamation plant capacities, and shows that the larger capacities are more effective, with reference to capital costs, in reducing the loadings of the intense storms.

By considering both the reduction in the intense storm loading and in the annual loading, the combination with the highest cost effectiveness is the 175-million gallon storage basin and the 50-mgd water reclamation plant.

Cost Effectiveness of Project

In dealing with multiple-purpose projects involving public investment in such broad areas as water quality management and recreation, one is confronted with the problem of elusive costs and non-quantifiable benefits. However, some insight into the effectiveness of a multi-purpose project is provided by defining the costs associated with single-purpose projects satisfying the various individual goals of the project.

The following discussion will present the various items which were considered as being directly or indirectly affected by this project and will attempt to define quantitatively the relative values and cost effectiveness of each. The obvious purpose of this is to compare the tentatively-selected alternative with different methods of obtaining the same goals, thus substantiating the desirability of the overall project.

The items which have been considered as having significant impact on the Kingman Lake project are:

Pollution Abatement
Recreation (Swimming, Boating, and General Recreation)
Replacement (or Additional) Parking for R. F. Kennedy Stadium
Highway Construction

Pollution Abatement

Whereas pollution abatement has a significant intrinsic value, it is difficult to quantify in any terms other than the minimum cost of alternative measures to attain the same goal. Separation of combined sewer areas had been considered as an alternative to storage and treatment. However, recent investigative efforts have indicated that the storm water discharges are themselves a significant pollution source, and would require eventual storage and treatment. A complete sewer separation for the entire District would not be completed until after the year 2000, and would cost an estimated $447,000,000[1]. (The Kingman Lake project involves about 25 percent of the District's present combined sewer area.)

Mined storage, with subsequent treatment at the Blue Plains Treatment Plant during off-peak hours, is the least-cost alternative to the surface storage and treatment concept presented in this report. Table 22 shows the mined storage cost versus comparable Kingman Lake costs for treatment and storage under the various alternatives (excluding the costs of the parking roof and swimming facilities).

From Table 22 it is obvious that the cost for mined storage (with off-peak treatment at Blue Plains) is significantly higher than the cost of the Kingman Lake storage and treatment of comparable volumes of wastewater.

Recreation

Information relative to cost-benefit relationships for recreation has been obtained from the U. S. Department of Interior National Park Service. The recreational facilities envisioned as benefits of the reclamation of land and water at Kingman Lake include water-oriented sports such as swimming, boating, and fishing, and land-oriented recreational facilities such as court games, scenic walks, picnic areas, etc.

---

[1]Board of Engineers study (1957) costs up dated from ENR index of 700 to present value of 1,320.

Table 22

Construction Cost Estimates
Mined Storage vs. Kingman Lake
Storage and Treatment

Mined Storage		Kingman Lake	
Capacity	Cost[1] millions of dollars	Capacity	Cost millions of dollars
115 mg	20.1	90 mg[2] 25 mgd[3]	14.3
		175 mg 25 mgd	16.0
225 mg	33.4	175 mg 50 mgd	19.3
		235 mg 25 mgd	18.9
285 mg	40.6	235 mg 50 mgd	22.1

[1]Includes cost of treatment at Blue Plains Plant.
[2]Capacity of storage basin, in millions of gallons.
[3]Capacity of water reclamation plant, in millions of gallons per day.

With an 8-hour turnover rate (required for disinfection) and a reclamation plant capacity of 50 mgd, the swimming lake will have a maximum daily capacity of 30,000 bathers on an effective swimming area of 11.3 acres. The facility will accommodate over 2,000,000 people annually, based on a 90-day swimming season.

Boating, fishing, and land-oriented recreational facilities can accommodate as many as 200,000 persons per year (Fishing 30,000; Boating 30,000; Wildlife Enthusiasts 20,000; Court Games 30,000; Picnics, scenic walks, bicycle trails, etc. 90,000). In total, as many as 2,200,000 persons would use recreational facilities at the Kingman Lake site. The National Park Service has valued each visitor-day at $1.50. The corresponding annual value of recreational facilities would then be $3,300,000. Assuming park operational costs of $500,000 per year and current bond rates of 8 percent (20 years), a capital expenditure for the above facilities in the amount of $27,700,000 could be justified.

Replacement Parking

Replacement or additional parking can be provided for R. F. Kennedy Stadium by constructing a structural covering over the proposed storage basin. This parking roof will not only replace parking which will be eliminated by the East Leg Freeway but will also provide an intangible aesthetic benefit. The total surface area of the storage basin is approximately 670,000 square feet, of which 500,000 square feet above the basin will be available for parking. The National Park Service has valued such land at $6.25 per square foot ($1.25/sq.ft. for acquisition and $5.00/sq.ft. for development). The parking facility could accommodate a maximum of 1,670 vehicles (145 per acre). Usage is estimated at 50 percent one hundred times per year plus 100 percent twenty times per year. An annual revenue of $116,900/year could be expected at a rate of $1.00 per space. Capital expenditures totaling $4,275,000 ($3,125,000 for land and development; $1,150,000 from revenue) could be justified.

The construction cost estimated for the parking cover over the storage basin is $3,894,000 as shown on Table 16. It should be noted that the only other area available for replacement parking is on the opposite side of the Anacostia River, where bus transportation to and from the Stadium would be required. No comparative cost is presented for this parking alternative, but it is obvious that costs would be higher and usage lower.

Highway Construction

The District of Columbia Department of Highways anticipates the construction of the East Leg Freeway along Kingman Lake in the near future. The highway construction and Kingman Lake projects complement each other with provisions for common construction. It has been envisioned that the highway would occupy approximately 170,000 square feet on the east side of the basin cover. The structural system designed to support the storage basin and the highway would obviate the necessity for a pile-supported

highway foundation. Flood protection and interception of existing storm drainage for the highway would be provided at the cost of the Department of Highways. The costs common to both projects include: the highway foundation supplied by Kingman Lake project $2,150,000[2]; interception of storm drainage on the east side of Kingman Lake $840,000; and cost of raising Burnam Barrier to 18.0 feet for flood control (not estimated nor included in Kingman Lake Project Costs).

Tunnel Storage

While tunnel storage is not required as an element of the Kingman Lake facilities, it is compatible with the long-range goals of the project. The inclusions of tunnel storage in the long-range plans of the project would, in addition to its primary function of surcharge relief, provide a greater overall protection against pollution from combined sewer overflows. The addition of tunnel storage would increase total storage capacity to 310 million gallons, which corresponds to a return frequency of approximately three years. An alternative relief sewer construction plan under consideration by the District of Columbia would provide the same surcharge relief, with no storage, at a significantly higher cost.

Summary of Cost Effectiveness

Table 23 presents a summary of cost effectiveness of the selected alternative as determined in this study.

---

[2]Computed from average foundation costs estimated by D.C. Department of Highways, (1.84 piles per linear foot x 2,300 l.f. x 70 feet per pile x $9.00 per foot of pile).

Table 23

Summary of Cost Effectiveness
of Selected Alternative

Items	Costs	Benefits
Diversion and Inlet Structures	$ 5,980,000	---
Pollution Control Facilities	18,510,000	$33,400,000[2]
Recreation[1]	5,200,000	27,600,000[3,4]
Common Highway Construction	3,880,000	3,880,000[5]
Replacement Parking	3,894,000	4,275,000
Sub-Total	$37,464,000	$69,155,000
Construction and Escalation Contingency	5,456,000	---
Engineering and Administrative[6]	2,300,000	3,600,000
TOTAL COSTS AND BENEFITS	$45,320,000	$72,755,000

[1]Including fish and wildlife.
[2]Minimum alternative cost (mined storage and treatment at Blue Plains).
[3]Justifiable capital expenditures based on annual value of $3,300,000 minus annual operating costs.
[4]Minimum alternative cost for neighborhood swimming facilities for 30,000 bathers = $60,000,000.
[5]District of Columbia Department of Highways agrees that cost is their responsibility, but does not necessarily agree with estimate.
[6]Engineering for above projects based on ASCE-recommended percentage fees.

SECTION IX

ACKNOWLEDGMENTS

ROY F. WESTON gratefully wishes to acknowledge Mr. George A. Moorehead, Chief of Systems and Planning, Department of Sanitary Engineering, District of Columbia, Washington, D.C. for his efforts and assistance in gathering data relative to the existing sewer system, records of overflows in the Northeast Boundary Trunk Sewer, Weather Bureau data, and a wealth of additional records and information which was not available from any other source.

Acknowledgment is made to Mr. John L. Paige, District of Columbia Department of Highways and to Mr. Edwin Baker, Michael Baker, Jr., Harrisburg, Pennsylvania for their assistance in providing boring logs, layouts, and proposed highway drawings for the vicinity of Kingman Lake.

Acknowledgment is made to Messrs. Manus J. Fish and Benjamin Howland of the National Park Service, Department of the Interior, for guidance and assistance in the planning of and establishing the relative values of recreational facilities.

Acknowledgment is made to Mr. John F. Miller, Special Studies Branch, United States Weather Bureau, for furnishing local climatological data and for providing assistance in interpretation of these data.

Acknowledgment is made to Dr. Jack W. Hilf, Chief Designing Engineer, Bureau of Reclamation, Department of the Interior, for guidance in establishing a soils investigative program and assisting in the review of soils data.

Acknowledgment is made to Mr. Allen Cywin, Chief of the Division of Applied Science and Technology, Mr. William Rosenkranz, Chief of the Storm and Combined Sewer Branch, and Mr. Darwin R. Wright, Project Officer, all of the FEDERAL WATER QUALITY ADMINISTRATION, Department of the Interior, for their interest and guidance during the course of this project.

Acknowledgment is made to the members of the staff of ROY F. WESTON who participated in this project:

R. F. Weston, P.E., President

J. E. Germain, P.E., Vice President	Client Services Division
W. D. Sitman, P.E., Vice President	Concept Technology Division
W. E. Hoover, P.E., Vice President	Engineering Design Division
V. T. Stack, P.E., Vice President	Research and Development Division
M. S. Neijna, P.E., Project Manager	Concept Technology Division
M. L. Woldman, P.E.	
P. L. Buckingham, P.E.	
J. K. Kane	
J. A. Lee	
D. N. Bibbo, P.E.	Engineering Design Division
R. E. Coleman, P.E.	
G. W. Orr	
T. E. Taylor	
R. B. Geissinger	
T. C. Agetone	
W. J. Buttner	
G. C. Torboss	
P. J. Marks	Research and Development Division
J. W. Davison	
C. J. Cahill	
J. A. Rohr	
J. C. Watt	
J. W. Hitzelberger	Planning & Systems Division
J. C. Allison	
D. W. Syphard	

Special acknowledgment is made to the Technical Editing, Report Preparation, and Duplicating Groups without whose assistance and perserverance this report could not have been completed.

J. L. Simons, Technical Editor	D. Rimel
J. P. Jarosh	P. Warihay
N. McVey	R. Towson
J. Smith	J. Day

SECTION X

REFERENCES

1. "Preliminary Engineering and Applied Research Study, Washington, D.C. Combined Sewer System", ROY F. WESTON report, February, 1970.

2. "Proposed Comprehensive Plan for the Nation's Capital", National Capital Planning Commission, February, 1967.

3. "Report on Planning Studies, Northeast Boundary Relief Sewer", Report No. 67-56 R, Burns and McDonnell Engineering Company, Engineers-Architects-Consultants, Kansas City, Mo., 1968.

4. Board of Engineers Report to the District of Columbia Department of Sanitary Engineering on Improvements to the Sewerage System, February 28, 1957.

5. FWQA Contract No. 14-12-403.

6. "The Climatic Handbook for Washington, D.C.".

7. J. C. Merrell et al, "The Santee Recreation Project", FWPCA Publication No. WP-20-7, 1967.

8. A. P. Black et al, "Use of Iodine for Disinfection", Journal American Water Works Association, November, 1965.

9. A. P. Black et al, "Iodine for the Disinfection of Water", Journal American Water Works Association, January, 1968.

10. A. P. Black, "Swimming Pool Disinfection with Iodine", Water and Sewage Works, July, 1961.

11. "Water Quality Criteria", National Technical Advisory Committee to the Secretary of the Interior, FWPCA, Washington, D.C., April, 1968.

12. J. A. Salvato, Environmental Sanitation. John Wiley and Sons, Inc. New York, 1958.

13. "Outdoor Recreation Space Standards", Bureau of Outdoor Recreation, Washington, D.C., April, 1957.

14. "Rainfall Frequency Analysis of the United States", U.S. Weather Bureau Technical Paper No. 40, May, 1961.

15. "Local Climatological Data, Annual Summary with Comparative Data, 1968, Washington, D.C.", National Weather Center, Asheville, North Carolina, 1969.

16. "Appraisal of Granular Carbon Contacting, Phase III", Robert A. Taft Research Center Report No. TWRC-12, May, 1969.

17. "Synthetic Storm Pattern" - C. J. Kiefer and H. H. Chu, Journal of Hydraulics Division, ASCE, Vol. 83, August 1957.

18. "Surface Runoff Determination from Rainfall Without Using Coefficients" W. W. Horner and S. W. Jens, Transactions, ASCE, Vol. 107, 1942.

19. "The Hydrology of Urban Runoff" - A. B. Tholin and C. J. Kiefer, Journal of the Sanitary Engineering Division, ASCE, Vol. 85, March 1959.

20. "Design and Construction of Sanitary Sewers" - ASCE MOP No. 37, New York, 1960.

21. "Report to the District of Columbia Department of Sanitary Engineering on Improvements to Sewerage System" - Board of Engineers, February 28, 1957.

22. G. E. Glover and P. M. Yatsuk, Microstraining - With Ozonation or Chlorination - Of Combined Sewer Overflows, preliminary draft of final report to FWPCA under Contract No. 14-12-136 by Cochrane Division, Crane Company, King of Prussia, Pennsylvania.

23. Cornell, Howland, Hayes and Merryfield Consulting Engineers and Planners, Rotary Vibratory Fine Screening of Combined Sewer Overflows, rough draft of report to FWPCA under Project No. 11020 FDD, Corvallis, Oregon, November 1969.

24. Richard E. Speece and Jack L. Adams, U-Tube Oxygenation Operating Characteristics, Technical Report No. 45, Engineering Experiment Station, New Mexico State University, Las Cruces, New Mexico (May 1968).

25. Huibers, D. T. A., McNabney, R. and Halfon, A., "Ozone Treatment of Secondary Effluents from Wastewater Treatment Plants", Report No. TWRC-4, Robert A. Taft Water Research Center, FWPCA, U.S. Department of Interior, Cincinnati, Ohio (April 1969).

SECTION XI

APPENDICES

Appendix		Page
A	TREATMENT PROCESS INVESTIGATION AND CONFIRMATION	103
	Project Scope and Objectives	103
	Experimental Program	103
	Program Implementation	104
	Experimental Results	106
	Conclusions	114
	Tables A-1 through A-6: Multi-Media Filtration Studies	115-120
	Table A-7: Comparison of Multi-Media and Fiberglass Filtration	121
	Table A-8: Activated Carbon Adsorption	122
	Table A-9: Phosphorus Removal	123
	Table A-10: Provisional Algal Assay Study	124
	Table A-11: Thickened Sludge Dewatering	125
	Figure A-1: Laboratory Multi-Media Filter Column	126
	Figure A-2: Multi-Media Filtration - Activated Carbon Adsorption Pilot Plant Flow Diagram	127
	Figure A-3: Laboratory Fiberglass Filter Column	128
B	APPLICATION OF TUNNEL STORAGE TO NORTHEAST BOUNDARY TRUNK SEWER	129
	General Concept	129
	Geological Investigation Program	130
	Data Collection	130
	Subsurface Investigation Program	130
	Laboratory Testing	132
	Table B-1: Estimate Cost Summary	133
	Figure B-1: General Tunnel Location	134
	Figure B-2: General Scheme-Vertical Shaft	135
C	PRELIMINARY SOIL AND FOUNDATION INVESTIGATION (Appended in Separate Volume)	137
D	INVESTIGATION OF RAINFALL-RUNOFF RELATIONSHIPS	139
	Methodology	139
	Results - Volume of Overflow	144
E	LITERATURE EVALUATION OF ALTERNATIVE WASTEWATER TREATMENT PROCESSES	145
	Microstraining of Combined Sewer Overflows	145
	U-Tube Aeration	147
	Ozonation as a Unit Process for Treatment of Combined Sewer Overflows	148

APPENDIX A

TREATMENT PROCESS INVESTIGATION AND CONFIRMATION

Project Scope and Objectives

The primary objectives of the Process Development Studies were as follows:

1. Conduct experimental studies to demonstrate the water quality of the effluent from multi-media filtration-activated carbon adsorption treatment of combined sewer overflow.

2. Determine and demonstrate a process which can provide the degree of treatment necessary to meet water quality objectives of the Kingman Lake Recreational Area Project.

3. Perform a comparative evaluation of multi-media filtration versus varying density fiberglass filtration.

Experimental Program

A program was prepared to provide 30-day continuous operation of an experimental unit utilizing filtration, activated carbon adsorption, and disinfection processes. Investigation of multi-media filtration of combined sewer overflows was directed toward confirming the effectiveness of this treatment, and to determine if a filter effluent could be produced which would be acceptable for application on a granular activated carbon bed. Activated carbon treatment of the effluent of multi-media filtration was studied experimentally to determine if certain BOD water quality criteria could be achieved. Disinfection by chlorination was included in the demonstration study as a means of achieving the bacteriological and viral requirements.

Samples of raw sewage and other wastewaters were collected and mixed to provide synthetic samples containing pollutants in concentrations approximating those expected in the combined sewer overflows from the Northeast Boundary Trunk Sewer. Treatment of a batch of synthetic sample was evaluated for a three-day continuous period. This was followed by a four-day investigation of both recycle of treated wastewater and makeup using relatively clean water samples. The first-stage operation of multi-media filtration provided an effluent which was used as the feed to the activated carbon adsorption columns, followed by chlorination to produce a final effluent. To provide comparative information, the fiberglass filtration unit was operated simultaneously with multi-media filtration columns for several investigative trials.

Program Implementation

1. Wastewater Samples

The wastewater samples were obtained from the following three sources in 600- to 2,000-gallon quantities:

a. Influent to the primary treatment facility at the West Chester, Pennsylvania Sewage Treatment Plant.

b. Overflow from the West Chester, Pennsylvania Reservoir.

c. Anacostia River water from the Kingman Lake area.

Mixtures were prepared of raw sewage and reservoir water, or of raw sewage with Anacostia River water. The 1,200-gallon batch mixtures were made up of approximately 50 percent raw sewage, with the addition of finely ground silt. To simulate make-up water, several samples consisting only of reservoir water or Anacostia River water were prepared. The samples were stored in tanks with continuous mixing and at a controlled temperature of 20°C for periods of three to four days during the experimental runs.

2. Description of Pilot-Scale Apparatus

The multi-media filtration demonstration unit was constructed with a two-inch diameter Pyrex glass column eight feet in length. The three types of filter media used were anthracite, sand, and garnet of sizes and arrangement shown in Figure A-1. A centrifugal pump was used to supply the forward flow, which was maintained at a constant rate with a flow regulator valve. Flow was measured by the use of a graduated cylinder and stopwatch. The pressure measurements were obtained as differential measurements across the filtration bed. Backwashing of the filter bed was accomplished with tap water pumped by a small centrifugal pump, and the flow rate was measured by a rotameter.

The effluent of the multi-media filter was collected by gravity in a 10-gallon plastic tank provided with an opening for overflow to waste. A positive displacement pump transferred a portion of this filtrate to the activated carbon unit.

The second-stage treatment by activated carbon adsorption consisted of four two-inch diameter, Pyrex glass, vertical columns eight feet in length, connected in series by one-half inch tubing with appropriate valves. Head loss was determined as differential measurement across the activated carbon bed in each column. Granular carbon, size 4 x 12, was placed in the columns for the first phase of the project, and was replaced with 12 x 40 size carbon for the second phase. Sample ports were provided at the base of each column, and at carbon depths of 6, 24, and 42 inches.

The effluent of the activated carbon unit flowed by gravity to a ten-gallon plastic tank, where disinfection was accomplished by feeding a chlorine solution by siphon from a holding tank. The flow diagram for the combined multi-media filtration and activated carbon adsorption demonstration unit is shown on Figure A-2.

The fiberglass filtration unit was constructed of Plexiglas to form a four-inch square, eight-foot high column. Provisions were made to insert four fiberglass plugs of varying densities into the column. An eighteen-inch bed of size 2.0 mm. anthracite was placed in the column above the plugs of fiberglass. Ports were available above and below each plug to determine head loss by differential measurement. Pumping of samples through the unit and backwashing were accomplished with the same facilities used for the multi-media filtration unit. The configuration of the fiberglass plugs of various densities is shown in Figure A-3.

3. Operating Procedures

a. Multi-Media Filtration

Several filter runs were made on each 1,200-gallon batch of wastewater. Each sample was pumped down-flow through the filter bed at a constant feed rate over a range of 5 gpm/sq.ft. to 20 gpm/sq.ft. A filter run was defined as that time period for wastewater application until excessive head loss indicated the need for backwash. Composite samples of feed and of effluent were taken during the filter run; these were analyzed for 5-day Biochemical Oxygen Demand, Chemical Oxygen Demand, and Suspended Solids.

Backwashing of the filter was accomplished with tap water (and air-scour) at a rate sufficient to expand the filter bed from twelve to eighteen inches; this backwash rate was maintained until the backwash effluent ran clear for ten minutes.

b. Activated Carbon Treatment

The effluent from the multi-media filter was pumped through the activated carbon columns at a constant rate of 4 gpm/sq.ft. An attempt was made to transfer to the carbon columns only that filtrate which was reasonably free of suspended solids.

Measurements were made of head loss across each column. Eight-hour composite samples were collected of feed to the unit, and of effluent from the final column. These samples were analyzed for 5-day Biochemical Oxygen Demand, Chemical Oxygen Demand, and Suspended Solids.

A Union Carbide Total Carbon Analyzer was used for continuous monitoring of the total carbon concentration at eight sample points on the columns. Separate feed and effluent samples were acidified and aerated, to determine inorganic carbon as the difference in total carbon before and after treatment.

c. Disinfection

A chlorine solution prepared from HTH solution hypochlorite was allowed to flow by a siphon arrangement into a final reservoir at a rate which insured a fifteen-minute detention time. A chlorine residual of 0.1 to 0.2 mg/L was maintained in the final effluent, and samples were composited for bacteriological examinations to determine total coliform and fecal coliform concentrations.

Experimental Results

1. Multi-Media Filtration

a. No Pretreatment

A 1,200-gallon mixture of wastewaters was prepared from 600 gallons of raw sewage influent to the primary treatment facilities of the West Chester, Pennsylvania Sewage Treatment Plant, combined with 600 gallons of overflow from the West Chester Reservoir. Finely-ground silt was added to increase the suspended solids concentration. This wastewater mixture was used for four filter runs over a three-day period. The application rate to the multi-media filter was 5 gpm/sq.ft. The filter bed was backwashed after each run.

The summary of analyses of the composite samples shown in Table A-1 shows COD removals of 59-74 percent, BOD removals of 52-78 percent, and suspended solids of 60-87 percent. However, the degree of suspended solids removal was not satisfactory because of rapid accumulation of the residual solids on the activated carbon bed in the No. 1 column when the filter effluent was fed to the activated carbon treatment unit. The suspended solids remaining in the filter effluent were inorganic in nature and consisted of a very fine silt, 10 microns or less in size.

b. Pretreatment of Wastewater by In-Line Flocculant Addition

A mixture of raw sewage and reservoir water plus silt comprised the batches of synthetic combined sewer overflow sample for this evaluation. Several short filter runs at 5 gpm/sq.ft. were made with the addition of 25 mg/L of alum

introduced into the feed line to the filter. This alum dosage produced a large floc which quickly formed a layer on the surface of the anthracite. A rapid increase in head loss resulted.

Several additional runs were made with smaller alum dosages on a similar batch of wastewater. Longer filter run times were observed; however, as indicated on Table A-2, no significant improvement in removals of COD, BOD_5, or suspended solids can be attributed to the in-line addition of alum.

Dow C-31 polyelectrolyte at a dosage of 0.1 mg/L was pumped into the feed line for one run; this did not improve the filtration results.

c. Treatment of Recycle Water (River of Lake Water)

Water obtained from the overflow of the West Chester Reservoir was pumped through the filtration unit at a rate of 10 gpm/sq. ft. for approximately three days to simulate the wastewater flow to the proposed treatment facility during periods of recycling water from the proposed swimming and fishing lakes. This was done to demonstrate system performance when operation is changed from higher to lower loadings of pollutants. There were no problems in filtration of the cleaner sample of reservoir water. Table A-3 shows that the percent removals of COD, BOD_5, and suspended solids were lower than results from previous filter runs on synthetic combined sewer overflow samples; effluent concentrations were lower too.

d. Pretreatment by Alum Flocculation

Chemical flocculation was studied because examination of the effluent of the Multi-Media Filter showed that residual solids were small, 10 microns or less in diameter. These suspended solids accumulated to a significant degree on the activated carbon and caused some head loss across the first column; thus it was decided to remove as much suspended matter as possible before application on the Multi-Media Filter.

A series of jar-test flocculation studies indicated good clarification of this mixture by the addition of 50 mg/L of alum during rapid mix followed by five minutes of flocculation. Fifteen minutes of settling time produced a good supernatant.

Two batches, composed of raw sewage and 400 gallons of reservoir water with silt added, were mixed for this test. While each batch was in the holding tank, an alum dosage of 50 mg/L was applied, followed by rapid mixing and thirty minutes of settling. Alum addition and sedimentation reduced the COD of one batch from 160 mg/L to about 40 mg/L. Likewise, this treatment reduced BOD from 32 mg/L to 3 mg/L, and the suspended solids from 580 mg/L to 14 mg/L.

The supernatant was pumped off to a separate tank and was used as the feed to the multi-media filter at rates of 5 gpm/sq.ft., 10 gpm/sq/ft. and 15 gpm/sq.ft. Table A-4 shows the results of filtration of the supernatant. The average percent removals across the two operations of alum pretreatment and multi-media filtration were: COD-76 percent, BOD_5-91 percent, and Suspended Solids-99 percent.

e. Anacostia River Water Sample

A 2,000-gallon sample of Anacostia River water was collected from a location in the Kingman Lake area, and transported by tank truck to the ROY F. WESTON laboratories in West Chester, Pennsylvania. Analyses of this water identified the characteristics as 26 mg/L COD, 5 mg/L BOD_5, and 165 mg/L Suspended Solids.

A filter run was made without pretreatment of the samples at a rate of 5 gpm/sq.ft. Removals of 37 percent COD, 10 percent BOD, and 71 percent Suspended Solids occurred. However, the very fine silt escaped filtration, and resulted in a turbid effluent. This filtrate was similar to that produced by filtration of a synthetic combined sewer overflow sample without pretreatment, and was not considered satisfactory as feed to the activated carbon pilot unit.

f. Anacostia River Water--Alum Pretreatment

A series of jar tests on the Anacostia River water sample indicated that the wastewater could be effectively treated with a dosage of 50 mg/L of alum, or with lower dosages of alum (10 mg/L-20 mg/L) combined with a polyelectrolyte dosage of 0.5 mg/L of Hercules Reten 210. Ferric chloride treatment was evaluated by jar tests, and produced satisfactory flocculation, but was less effective in the removal of fine silt.

One thousand gallons of the Anacostia River sample were treated in the tank with 50 mg/L of alum. After settling, the supernatant was pumped to the multi-media filter at rates of 10 and 20 gpm/sq.ft. Alum treatment reduced COD to 10 mg/L, BOD to less than 2 mg/L, and Suspended Solids to 14 mg/L. Table A-5 summarizes the multi-media filtration data. Total reduction in COD by alum treatment followed by filtration was 65 percent, BOD_5 75 percent, and Suspended Solids 98 percent.

g. Synthetic Mixture of Anacostia River Water and Domestic Wastewater

A mixture of raw sewage, silt, and Anacostia River water was prepared. This mixture was treated with 100 mg/L of alum, which reduced COD from 144 mg/L to 62 mg/L, BOD_5 from 67 mg/L to 19 mg/L, and Suspended Solids from 522 mg/L to 58 mg/L.

Table A-6 shows the results of multi-media filtration of the supernatant after alum flocculation and sedimentation. The combined process of alum pretreatment followed by filtration effected an overall removal of 70 percent of COD, 82 percent of BOD_5, and 97 percent of Suspended Solids.

A second batch was prepared similar to the first, but with more silt. As before, filtration followed alum treatment at a dosage of 100 mg/L. The results were similar, with an overall reductions of 73 percent COD, 92 percent BOD_5, and 99 percent Suspended Solids.

2. Fiberglass Filtration

A comparative evaluation was made of the fiberglass filter and a four-inch diameter multi-media filter. Both filters were operated simultaneously at a flow rate of 5 gpm/sq.ft., with a feed of a synthetic combined sewer overflow sample without alum pretreatment.

A considerably longer run time was permitted by the fiberglass filter. After one hour, the head loss across the multi-media filter was excessive because of accumulated solids; in comparison, the fiberglass filter allowed a nine-hour run. Table A-7 shows that the percent removals of COD and BOD were in the same range, while the suspended solids reduction by fiberflass filtration was much greater. For example, this test achieved a 98 percent removal compared to the 85 percent solids removal of the multi-media filter.

Backwashing of the fiberglass filter was accomplished with tap water and air at 40 psi. This high backwashing pressure was necessary to dislodge the solids trapped in the fiberglass plugs, but still did not adequately clean the unit. Subsequent runs attempted through these same fiberglass plugs were of very short duration because of a rapid increase of head loss across each of the plugs. In fact, the initial head loss of the pilot unit across the bed after backwashing was higher than when the plugs were new.

3. Activated Carbon Treatment

The initial application of activated carbon adsorption was to the effluent from multi-media filtration without alum pretreatment. The carbon columns were charged with a relatively coarse carbon to determine if any difficulties would be encountered in treating an effluent containing as much as 125 mg/L of very fine silt. Satisfactory removals of COD, BOD_5, Total Carbon, and Total Organic Carbon were obtained; however, a significant amount of suspended solids accumulated in the first column and eventually caused too high a head loss. This trial established the need to use alum pretreatment to produce an effluent containing a low concentration of suspended solids. Alum pretreatment, settling, and multi-media filtration, reduced concentrations of suspended solids to a level (3-15 mg/L) which did not cause too high a head loss in the first carbon column. A pumping rate of 4 gpm/sq.ft. was maintained during the entire pilot plan study, and the columns were charged with 12 x 40 mesh carbon. The average concentrations of COD, BOD, suspended solids, total carbon, and total inorganic carbon in the feed and effluent are shown in Table A-8.

At the time of changeover from the treatment of a synthetic wastewater sample to a sample containing considerably lower concentrations of pollutants (reservoir water), an initial elutriation of adsorbed materials from the activated carbon bed was observed. The physical redistribution was brief, and did not occur again throughout the remainder of the run.

4. Disinfection

The disinfection of the final effluent from the Activated Carbon Pilot Unit was achieved by the addition of a dilute hypochlorite solution in a ten-gallon holding tank, at chlorine dosage rates of 1.0-5.0 mg/L. A detention time of fifteen minutes and a total chlorine residual of 0.1-1.0 mg/L in the final effluent were maintained. Bacteriological examinations of eight-hour composite samples of the effluent were accomplished by the Millipore Filter Technique to determine the colony count of total coliform and fecal coliform.

5. Phosphorus Removal

The experimental studies included a sampling and analytical program to determine the effectiveness of the demonstration unit for the removal of phosphorus compounds. As indicated in Table A-9 the synthetic wastewater samples were found to contain from 23 mg/L to 30 mg/L of total phosphate. Table A-9 also shows that alum flocculation of these wastewaters produces total phosphate reductions of from 61 percent and 90 percent at dosages of 50 mg/L and 100 mg/L of alum. Further phosphorus removal through the multi-media filter was not significant. Some additional reduction was observed by

filtration or absorption on the activated carbon. Elutriation of the phosphate from the carbon bed was evident when a synthetic wastewater run was followed by reservoir water or river water. A summary of the algal growth study is presented in Table A-10.

6. Sludge Dewatering

The settling and thickening characteristics of the sludge obtained from the alum flocculation treatment were good. The floc was large, and settled rapidly to produce a clear supernatant in 20 to 30 minutes. One-liter thickening tests of the settled sludge with slight agitation by stirring[3] showed that a settled sludge containing 4.5 percent solids (dry weight) can be thickened to approximately 9.0 percent solids in one hour.

The sludge from the backwash of the multi-media filter was evaluated at 0.4 percent solids (dry weight) by one-liter settling tests. Within 20 minutes, the sludge had settled to 15 percent of the original volume to produce a sludge of approximately 2.7 percent solids. Sufficient sludge of this type was not available for thickening or dewatering tests.

The thickened sludge produced by alum flocculation was used for dewatering studies, which included an evaluation of vacuum filtration by the Buchner Funnel technique. Lime, ferric chloride, and several polyelectrolytes were investigated as sludge conditioners. The sludge alone dewatered poorly, and none of the conditioners produced a satisfactory improvement in the filtration rates. The specific resistance data obtained from the Buchner Funnel evaluation are summarized in Table A-11.

A limited evaluation of the dewatering of the sludge by centrifuge indicated that there could be difficulty in obtaining a satisfactory cake. In our best judgment (within the limitations of the project scope and the time allotted), ten centrifuges would handle the sludge adequately. In the engineering design phase, the sludge dewatering problem will be subject to a more critical analysis, and the result probably will be to specify alternative dewatering facilities expected to be less costly than the ten centrifuges involved in the current preliminary design and cost estimates.

Sludge cooking at high pressures and temperatures indicated a significant reduction in the specific resistance of the sludge to vacuum filtration. Quantities of thickened sludge were subjected to various pressures and high temperatures (indirect heat) for different periods

---

[3]By a standard ROY F. WESTON device designed to stir the contents of a 1-liter cylinder at 1/6 rpm.

of time. The cooked sludge was submitted to further evaluation by the Buchner Funnel Technique in order to determine specific resistance. Table A-11 shows that this treatment at 82°C and 290 psi pressure for 60 minutes was able to change the specific resistance of the thickened sludge from 5,350 x 10^6 sec.^{2}/gm with untreated sludge to 61.6 x 10^6 sec.^{2}/gm after cooking.

7. Provisional Algal Assay Study

An experimental study was performed to estimate the effect on algal growth in an environment consisting of various wastewater samples collected before treatment, and at various stages of treatment through the pilot plant. Samples of raw sewage, synthetic storm overflow mixture, Multi-Media Filter effluent, and activated carbon treatment effluent were evaluated.

The provisional algal assay procedure developed by the Joint Industry/Government Task Force on Eutrophication was the procedure used throughout this study. Procedure No. 1, a bottle test, is the method by which test algae are added to the sample in the laboratory under controlled conditions, and growth is determined by assaying the algal crop on a daily schedule. Table A-10 summarizes the results obtained by this procedure.

It appears from an examination of these data that the phosphorus concentration may have a limiting effect on algal growth in the reservoir water and in Anacostia River water. However, other factors such as sample clarity, with greater light penetration, may have influenced the growth in the samples with higher turbidity.

The algal growth itself created a very turbid mixture, brilliant green in color. A factor to consider in interpretation of these results is that considerable time (three weeks under refrigeration) elapsed between actual sampling time and the start of the algal study.

The conclusion drawn from this brief study is that the effluents from the pilot plant, when treating synthetic wastewater samples, resulted in as great as or greater algal production than the standard nutrient solution. However, when simulated recycle water was run (reservoir water or Anacostia River water), considerably less growth was observed.

8. Virus Study

In order to determine the effects on a particular virus by the proposed treatment, a procedure was developed and implemented concurrently with the pollutant removal experimental studies.

A synthetic combined sewer overflow sample was prepared from 250 gallons of raw sewage and 250 gallons of Anacostia River water. This mixture was maintained at a temperature of 30°C and constantly mixed. Eighty milliliters[4] of Type 1, live polio virus, obtained from Wyeth Laboratories, in a 0.85 percent saline solution was added to this mixture. A mixing period of 15 minutes was allowed before treatment of the entire contents of the tank by 100 mg/L alum. The contents were mixed rapidly for five minutes, the floc allowed to settle for thirty minutes, and the supernatant pumped to another tank. This supernatant was fed to the Multi-Media Filter at a rate of 5 gpm/sq.ft. and to the Activated Carbon columns at 4 gpm/sq.ft. The final effluent was chlorinated at 1.0 mg/L.

An additional twenty milliliters of the polio virus was added twenty-four hours later to the supernatant sample, and the chlorine dosage was increased to 5.0 mg/L at this time.

Samples were collected of the initial mix containing polio virus, the supernatant after alum treatment, effluent from the Multi-Media Filter, effluent from the Activated Carbon Pilot Unit, and of the final effluent after chlorination. These samples were delivered to Microbiological Associates, Bethesda, Maryland for examination.

Results of these tests indicated no virus activity even in the sample of the untreated wastewater-rinses mixture. The conclusions drawn from the virus test are:

a. The virus was inactivated in the wastewater medium. This is confirmed.

b. The testing procedure was not sufficiently sensitive to detect the virus.

9. BOD_5 Removal During Storage

The mixtures of raw sewage and reservoir water which did not receive the alum flocculation treatment were stored in tanks for three-day periods. The contents were mixed mechanically to a degree which kept the solids suspended and which maintained an aerobic condition. The temperature was controlled at 20°C in the mixture. Frequent analyses for BOD_5 were conducted during this period, and a plot of BOD_5 vs. time indicates approximately 50 percent BOD_5 removal for three days storage under these conditions.

---

[4] Each milliliter contains 200,000 to 500,000 tissue culture infective doses ($10^{5.3}$ to $10^{5.7}$ $TCID_{50}$).

Conclusions

1. Treatment of a synthetic combined sewer overflow wastewater by multi-media filtration, followed by activated carbon treatment and disinfection, can produce an effluent which meets the water quality criteria objectives outlined in this report, if the wastewater is pretreated by chemical flocculation and clarification.

2. Pretreatment by in-line chemical addition as an aid to filtration before the multi-media filter was not successful with the chemicals and at the dosages tested.

3. No significant problems were observed during treatment of simulated recycle of water from the proposed swimming and boating-fishing areas. Some elutriation of adsorbed materials occurred briefly when treatment of a wastewater containing greater levels of pollutants was followed by simulated recycle water.

4. Pretreatment of Anacostia River make-up water by chemical flocculation is necessary to assure removal of fine silt before multi-media filtration.

5. Chlorination of the final effluent of the experimental unit demonstrated that the water quality objectives concerning total coliform and fecal coliform can be achieved.

6. Filtration through fiberglass was shown to be an effective method of solids removal; however, considerable difficulties are experienced in effectively removing the accumulated solids by backwashing.

7. Significant phosphorus removal occurs during the pretreatment of the wastewater by chemical flocculation. Some additional reduction of phosphorus was obtained by treatment thorugh the demonstration unit; however, elutriation of the retained phosphorus was evident.

8. Algal production from wastewater nutrients was not inhibited by treatment through the demonstration unit.

9. The dewatering characteristics of the sludge produced by chemical flocculation with alum were poor. None of the sludge conditioners evaluated produced a satisfactory improvement in dewatering by vacuum filtration.

Table A-1

Kingman Lake
Federal Water Quality Administration
Washington, D.C.

Multi-Media Filtration
Synthetic Combined Sewage Sample
No Pretreatment

Date	Batch Number	Run Number	Flow Rate	COD			BOD			Suspended Solids		
				Feed	Effluent	Percent Removal	Feed	Effluent	Percent Removal	Feed	Effluent	Percent Removal
			gpm/sq.ft.	mg/L	mg/L		mg/L	mg/L		mg/L	mg/L	
3-6-70	1	1	5	172	71	59	37	16	56	504	64	87
3-6-70	1	1	5	152	60	60	29	14	52	500	80	84
3-7-70	1	2	5	130	40	69	36	8	78	498	64	87
3-7-70	1	2	5	130	40	69	17	8	53	392	79	80
3-8-70	1	3	5	160	45	74	19	7	63	526	139	73
3-8-70	1	3	5	170	50	70	21	5	76	560	86	85
3-9-70	1	3	5	130	50	61	19	7	63	369	150	60
3-9-70	1	4	5	116	46	60	22	7	68	436	126	71

Table A-2

Kingman Lake
Federal Water Quality Administration
Washington, D.C.

Multi-Media Filtration
Synthetic Combined Sewage Sample
Pretreatment by In-line Filter-Aid Addition

Date	Batch Number	Run Number	Flow Rate	Alum	COD			BOD			Suspended Solids		
					Feed	Effluent	Percent Removal	Feed	Effluent	Percent Removal	Feed	Effluent	Percent Removal
			gpm/sq.ft.	mg/L	mg/L	mg/L		mg/L	mg/L		mg/L	mg/L	
3-11-70	3	1	5	25	200	81	59	67	42	47	320	40	88
3-12-70	3	2	5	25	168	69	59	54	21	61	310	20	94
3-18-70	5	1	5	.5	137	73	46	29	15	48	266	66	75
3-19-70	5	2	5	10	105	54	49	20	8	60	228	38	83
3-20-70	5	3	5	15	144	52	64	22	7	68	316	75	76
4-14-70	3	3	5	0.1[1]	153	64	58	24	11	54	344	62	82

[1]Dow C-31 Polyelectrolyte.

Table A-3

Kingman Lake
Federal Water Quality Administration
Washington, D.C.

Multi-Media Filtration
Reservoir Water Sample
No Pretreatment

Date	Run Number	Flow Rate	COD			BOD			Suspended Solids		
			Feed	Effluent	Percent Removal	Feed	Effluent	Percent Removal	Feed	Effluent	Percent Removal
		gpm/sq.ft.	mg/L	mg/L		mg/L	mg/L		mg/L	mg/L	
3-14-70	1	10	13.0	14.0	--	2.1	1.1	48	29	10	65
3-15-70	1	10	10.8	11.2	--	1.4	1.2	15	12	8	33
3-15-70	1	10	10.8	9.7	10	1.3	1.1	7	17	6	65
3-15-70	1	10	16.2	9.7	40	1.6	1.3	19	13	9	30
3-16-70	1	10	27.0	18.4	32	1.4	0.7	50	38	14	62
3-16-70	1	10	16.2	9.7	40	1.3	0.8	39	6	1	83
3-16-70	1	10	19.4	10.8	44	1.9	0.8	58	9	2	78
3-17-70	1	10	15.1	13.0	14	1.0	0.7	30	8	3	62

Table A-4

Kingman Lake
Federal Water Quality Administration
Washington, D.C.

Multi-Media Filtration
Synthetic Combined Sewage Sample
Pretreatment by Alum Flocculation and Sedimentation

Date	Batch Number	Run Number	Flow Rate	COD			BOD			Suspended Solids		
				Feed[1]	Effluent	Percent Removal	Feed[1]	Effluent	Percent Removal	Feed[1]	Effluent	Percent Removal
			gpm/sq.ft.	mg/L	mg/L		mg/L	mg/L		mg/L	mg/L	
3-20-70	5	6	5	40.7	35.3	13	2.7	1.7	37	12	5	58
3-21-70	5	6	5	37.5	34.2	9	3.3	2.0	39	15	6	60
3-21-70	5	7	10	39.6	34.2	14	2.5	1.4	44	14	8	43
3-21-70	5	7	10	37.8	36.7	3	3.5	1.5	57	9	4	55
3-22-70	5	7	10	38.9	39.8	--	3.4	1.5	56	14	5	63
3-22-70	6	1	10	43.2	37.8	12	7.3	3.5	52	19	3	84
3-22-70	6	2	15	42.5	39.2	8	6.9	3.5	49	14	11	21
3-23-70	6	2	15	38.2	36.0	6	4.4	3.1	30	15	5	67
3-23-70	6	2	15	39.2	41.4	--	6.0	3.0	50	17	4	76
3-23-70	6	2	15	40.3	36.0	11	8.0	5.0	37	10	3	70
3-24-70	6	2	15	40.3	50.1	--	7.0	5.0	28	3	1	66

[1]Supernatant of alum flocculation and sedimentation.

Table A-5

Kingman Lake
Federal Water Quality Administration
Washington, D.C.

Multi-Media Filtration
Anacostia River Water
Pretreatment by Alum Flocculation and Sedimentation

Date	Run Number	Flow Rate	COD			BOD			Suspended Solids		
			Feed[1]	Effluent	Percent Removal	Feed[1]	Effluent	Percent Removal	Feed[1]	Effluent	Percent Removal
		gpm/sq.ft.	mg/L	mg/L		mg/L	mg/L		mg/L	mg/L	
3-28-70	1	10	10.0	7.5	25	1.6	1.4	12	14	3	79
3-29-70	1	10	12.5	7.5	40	1.9	1.7	11	13	1	92
3-29-70	1	20	17.3	9.9	43	1.5	0.7	53	19	9	53
3-29-70	1	20	13.6	11.1	12	--	--	--	14	4	71

[1]Supernatant of alum flocculation and sedimentation.

Table A-6

Kingman Lake
Federal Water Quality Administration
Washington, D.C.

Multi-Media Filtration
Combined Sewage Sample Using
Synthetic Anacostia River Water

Date	Batch Number	Run Number	Flow Rate	COD			BOD			Suspended Solids		
				Feed[1]	Effluent	Percent Removal	Feed[1]	Effluent	Percent Removal	Feed[1]	Effluent	Percent Removal
			gpd/sq.ft.	mg/L	mg/L		mg/L	mg/L		mg/L	mg/L	
3-31-70	10	1	10	57.4	49.0	14	25.0	19.0	24	26	18	31
3-31-70	10	1	5	61.6	44.4	28	19.4	13.2	32	58	19	67
3-31-70	10	1	5	59.4	38.7	35	15.2	11.1	27	49	17	65
4-1-70	10	1	5	51.2	42.1	18	19.6	10.1	48	26	5	81
4-1-70	10	1	5	51.8	42.4	18	15.0	6.0	60	38	13	66
4-2-70	11	1	5	37.7	27.7	26	11.0	0	100	35	8	77
4-2-70	11	1	5	33.3	23.3	30	14.0	4.0	72	14	5	64
4-2-70	11	1	5	30.0	22.2	26	20.0	10.0	50	21	5	76
4-3-70	11	1	5	28.3	26.2	34	14.0	7.0	50	7	8	--
4-3-70	11	1	5	30.5	24.0	24	--	--	--	7	1	86

[1]Supernatant of alum flocculation and sedimentation.

Table A-7

Kingman Lake
Federal Water Quality Administration
Washington, D.C.

Comparison of Multi-Media and
Fiberglass Filtration

	Multi-Media	Fiberglass[1]
Flow Rate, gpm/sq.ft.	5	5
Run Time, hours	1	9
Chemical Oxygen Demand (COD)		
Concentration in Feed, mg/L	159	197
Concentration in Effluent, mg/L	48	58
Percent Removal	70	70
Biochemical Oxygen Demand (BOD)		
Concentration in Feed, mg/L	31.7	48.0
Concentration in Effluent, mg/L	6.0	12.0
Percent Removal	81	75
Suspended Solids		
Concentration in Feed, mg/L	580	536
Concentration in Effluent, mg/L	86	8
Percent Removal	85	98

[1]Fiberglass did not return to original condition when backwashed

Table A-8

Kingman Lake
Federal Water Quality Administration
Washington, D.C.

Activated Carbon Adsorption
Following Alum Pretreatment and
Multi-Media Filtration

Sample	COD		BOD		Suspended Solids		Total Carbon		Total Organic Carbon	
	Feed[1] mg/L	Effluent mg/L	Feed[1] mg/L	Effluent mg/L	Feed[1] mg/L	Effluent mg/L	Feed[1] mg/L	Effluent mg/L	Feed[1] mg/L	Effluent mg/L
Synthetic Mix	35	9	3.5	1.2	8	4	31	22	15.5	5.5
Anacostia River Water	9	3	1.8	1.0	4	3	8	5	5.4	2.4
Synthetic Mix	34	12	11.2	3.9	10	6	17	8	13.6	3.4

[1]Effluent from multi-media filtration.

Table A-9

Kingman Lake
Federal Water Quality Administration
Washington, D.C.

Phosphorus Removal

Date	Batch Number	Sample	Treatment	Total Phosphate: Supernatant: Initial Mix	Supernatant: After Treatment	Supernatant: Percent Removal	Multi-Media Filter: Influent	Multi-Media Filter: Effluent	Multi-Media Filter: Percent Removal	Activated Carbon: Influent	Activated Carbon: Effluent	Activated Carbon: Percent Removal	Total Percent Removal
				mg/L	mg/L		mg/L	mg/L		mg/L	mg/L		
3-12-70	3	Raw Sewage plus Reservoir Water	None	23.1	--	--	23.1	14.5	37	14.5	6.5	55	72
3-13-70	3	Raw Sewage plus Reservoir Water	None				23.1	20.5	11	20.5	12.5	39	46
3-14-70	3	Raw Sewage plus Reservoir Water	None				23.1	20.0	13	20.0	19.0	5	18
3-15-70	4	Reservoir Water	None	0.13	--	--	0.13	0.12	8	0.12	2.55	*	*
3-16-70	4	Reservoir Water	None				0.13	0.11	15	0.11	1.47	*	*
3-21-70	5	Raw Sewage plus Reservoir Water	50 mg/L - Alum	29.0	11.1	62.0	11.1	10.2	8	10.2	0.5	95	98
3-22-70	5	Raw Sewage plus Reservoir Water	50 mg/L - Alum				11.1	10.4	6	10.4	1.4	87	95
3-23-70	6	Raw Sewage plus Reservoir Water	50 mg/L - Alum				11.1	10.0	10	10.0	3.0	70	90
3-24-70	7	Raw Sewage plus Reservoir Water	50 mg/L - Alum	31.0	12.0	61.0	12.0	9.0	25	9.0	5.6	38	82
3-26-70	7	Raw Sewage plus Reservoir Water	50 mg/L -				12.0	6.0	50	6.0	5.0	17	84
3-28-70	8	Anacostia River	None	2.0	--	--	2.0	Nil	100	--	--		
3-29-70	9	Anacostia River	50 mg/L - Alum	2.0	0.4	80.0	0.4	0.05	87	0.05	0.60	*	*
3-31-70	10	Raw Sewage plus Anacostia River	100 mg/L - Alum	30.0	11.5	62.0	11.5	10.0	13	10.0	2.7	62	91
4-2-70	11	Raw Sewage plus Anacostia River	100 mg/L - Alum	30.0	3.0	90.0	3.0	2.5	17	2.5	1.5	40	95
4-3-70	11	Raw Sewage plus Anacostia River	100 mg/L - Alum				3.4	2.1	38	2.1	1.2	43	96

*Stripping.

Table A-10

Kingman Lake
Federal Water Quality Administration
Washington, D.C.

Provisional Algal Assay Study

Sample	Algal Growth/ Liter of Sample	Total PO_4
Nutrient Water (Control)	450	1.9
Raw Sewage	834	51.0
Synthetic Storm Overflow Mixture	350	20.4
Tri-Media Filter Effluent	450	14.5
Activated Carbon Treatment Effluent	633	12.5
Reservoir Water	100	.2
Nutrient Water	550	1.9
Anacostia River Water	117	.4
Pilot Plant Final Effluent	134	.6

Table A-11

Kingman Lake
Federal Water Quality Administration
Washington, D.C.

Thickened Sludge Dewatering

No.	Filter Aid	Dose % dry solids	Specific Resistance X 10^6 sec^2/gm	Comment	PSI	°C	Time minutes
1	None	--	5,350	Thickened sludge Solids Concentration			
2	$FeCl_3$	15%	720	12.5%			
3	$FeCl_3$	20%	598				
4	Lime	8%	2,300				
5	$FeCl_3$	4%					
	Lime	16%	845				
6	C-31	2%	570				
7	Reten 210	.5%	1,110				
8	C-7	.5%	1,800				
9	N-12	.5%	1,800				
10	990-N	.5%	1,650				
11	A-23	.5%	1,670				
				High Pressure - Heat Treatment			
1			359		100	82	30
2			80.8		250	79	30
3			61.6		290	82	60

FIGURE A-1

LABORATORY MULTI-MEDIA FILTER COLUMN

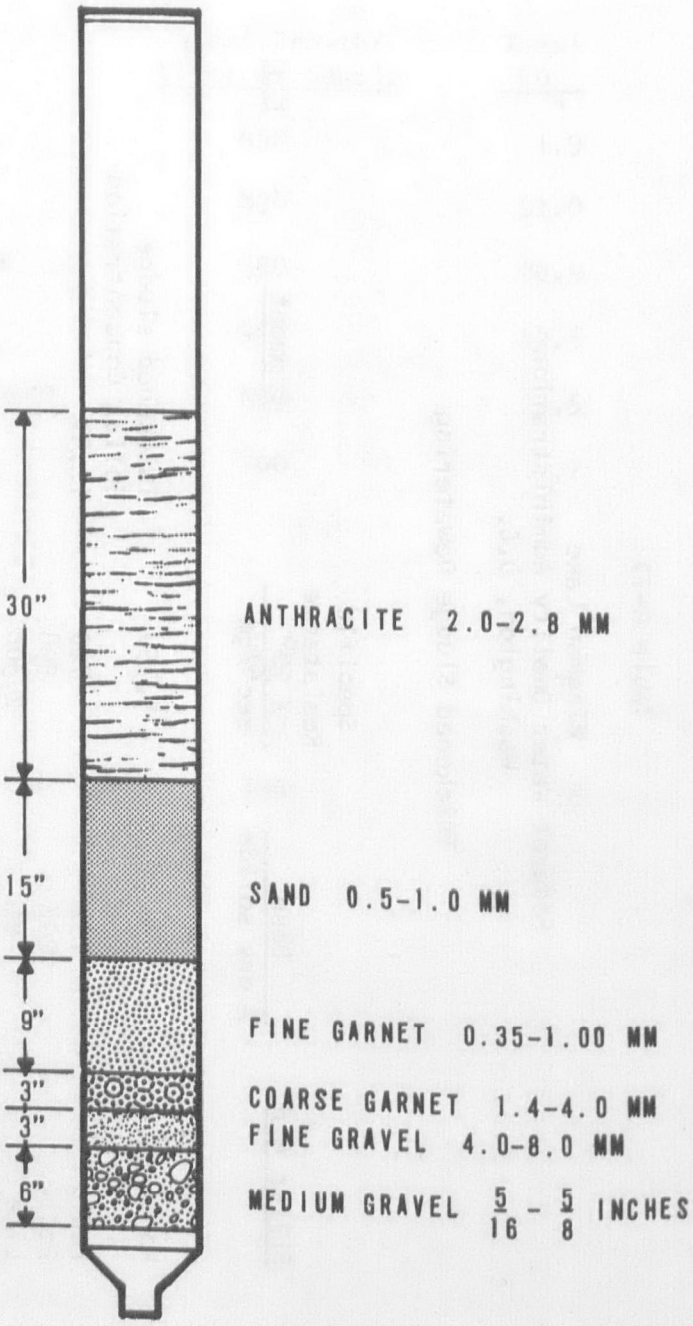

FIGURE A-2

MULTI-MEDIA FILTRATION-ACTIVATED CARBON ADSORPTION PILOT PLANT FLOW DIAGRAM

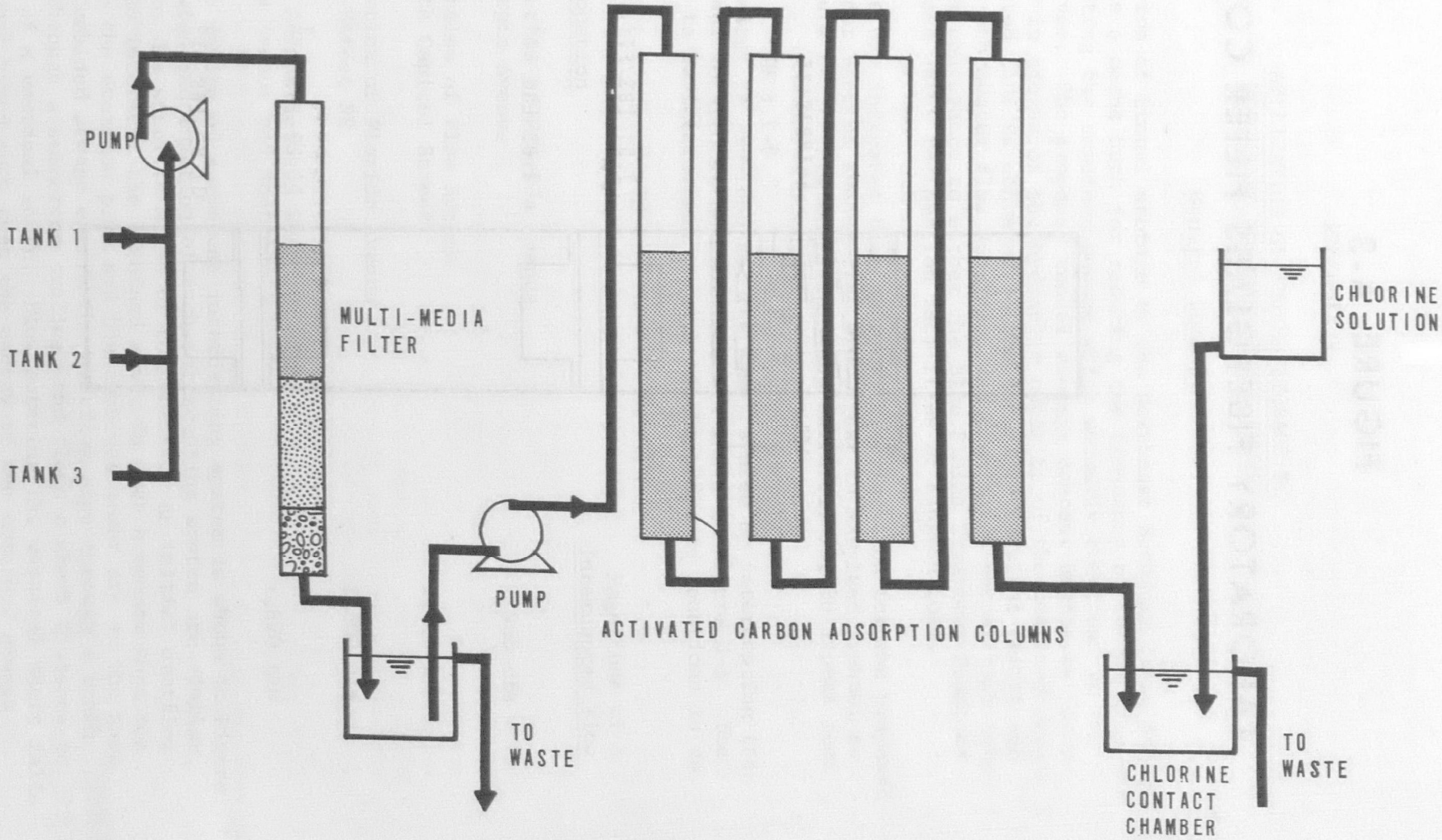

FIGURE A-3

LABORATORY FIBERGLASS FILTER COLUMN

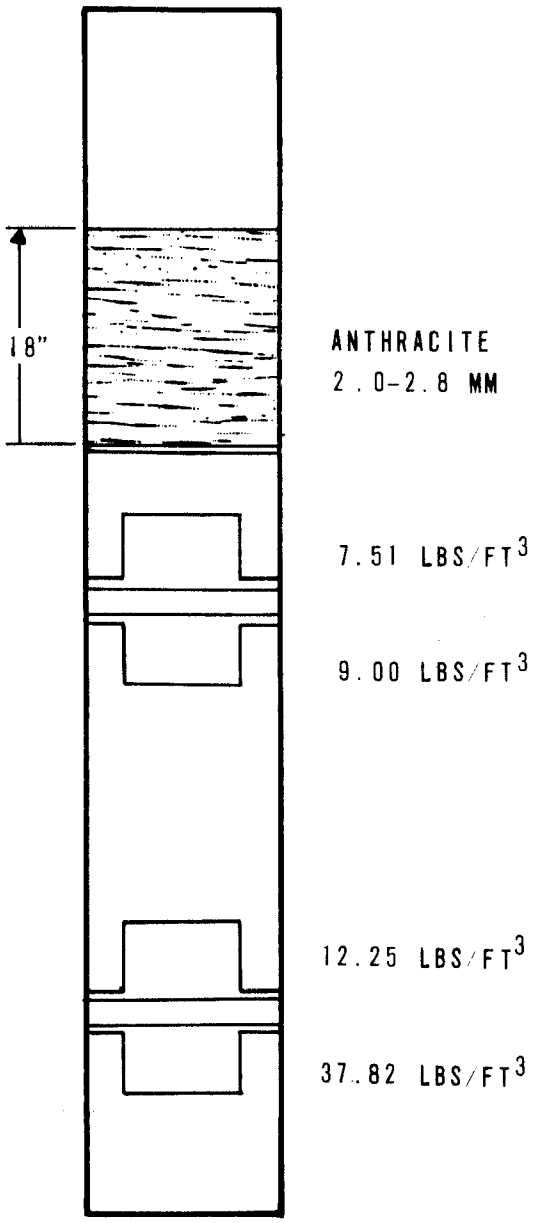

APPENDIX B

APPLICATION OF TUNNEL STORAGE TO NORTHEAST BOUNDARY TRUNK SEWER

General Concept

The application of tunnel storage to the Northeast Boundary Trunk Sewer would provide a means both for reducing the frequency of surcharging and for intercepting the combined sewage which normally overflows to the Anacostia River. The proposed tunnel storage concept begins by intercepting flow in excess of the hydraulic capacity of the combined sewer. The intercepted flow is conveyed to the tunnel by vertical shafts and stored until stormwater flow subsides, and then it is pumped back into the sewer for conveyance to either the Blue Plains Treatment Plant or to the proposed water reclamation facilities at Kingman Lake.

Preliminary study indicates that an attractive location for the proposed tunnel is under Florida Avenue from 9th Street to Maryland Avenue, as shown in Figure B-1. This represents approximately 13,000 lineal feet of tunnel.

Storm flow relief is provided for the sewer system by intercepting the flow at various locations, not just one, as shown in Figure B-1. The maximum flow to be intercepted at each of the proposed locations is as follows:

Location	Magnitude of Intercepted Flow
1. Intersection of Florida Avenue and Georgia Avenue	900 cfs
2. Intersection of Flow Avenue and North Capitol Street	1,300 cfs
3. Intersection of Florida Avenue and 4th Street NE	1,300 cfs
4. Florida Avenue between West Virginia Avenue and Montello Avenue	1,670 cfs

A preliminary design of a typical intercepting system is shown in Figure B-2. The design and function of each intercepting system are similar, but vary as to the specific sizes of components. An initial overflow pipe is set to intersect the combined sewer in such a manner that the crown of both the overflow pipe and the combined sewer are at the same elevation. Combined sewage enters the overflow pipe through a trash rack, drops through a submerged orifice, and flows a short distance to the entrance of a vertical shaft. Flow entering the vertical shaft falls into a plug pool sized such that the energy of the combined sewage (falling at or near terminal velocity) is sufficiently dissipated. Armor

plating is placed on the bottom of the plunge pool directly beneath the vertical shaft to prevent damage to the structure when the initial influent begins to enter the empty plunge pool. A pipe hydraulically sized to accept the peak influent rate provides for flow from the plunge pool to the storage tunnel. A smaller second pipe, located at the base of the plunge pool, functions as a drain from the plunge pool to prevent the stagnation of the standing combined sewage and resulting odor problems.

It is also proposed that the tunnel be located entirely within bedrock, be constructed by the use of both mole and conventional mining techniques, and have a semi-circular configuration on the top with a rectangular base. Even if the tunnel is located within bedrock, it is reasonable to assume that some lining may be required to seal fractures in the bedrock; however, it is not anticipated that any such lining will be extensive.

It is proposed that the tunnel be sloped 1.5 feet per 1,000 feet, to permit it to fill from its lower extremity. As soon as the tunnel fills to a predetermined level at each vertical shaft, a sensor sends a signal to a hydraulically actuated sluice gate in the overlying overflow pipe from the combined sewer. Upon receiving this signal, the sluice gate closes. This process continues until all four gates are closed, which is when the tunnel is completely full. Stored flow is pumped back to the combined sewer when the storm flow in the combined sewer subsides. An estimate of the capital cost involved in this project (based on the ENR Index = 1320) is presented at the end of this appendix.

Geological Investigation Program

Prior to any definite decisions in regard to tunneling, it is imperative that geologic studies be conducted to evaluate subsurface conditions, not only in the proposed tunnel area, but also at the proposed locations of subordinate structures. This evaluation would consist of study of existing data, development and implementation of a subsurface investigation program, laboratory and field testing, and analysis and interpretation of the results.

Data Collection

All available pertinent data should be collected and evaluated prior to the subsurface exploration program. Much data can be collected from governmental agencies such as the U. S. Geological Survey, D.C. Highway Department, and the Metropolitan Area Transit Authority. Other sources of data would be from tunneling contractors who are presently working in the area or who have constructed tunnels in the District of Columbia.

Subsurface Investigation Program

Subsequent to the collection and review of all pertinent available data, a detailed subsurface investigation program should be developed. This program should include:

1. Seismic Survey - A series of seismic surveys should be made in the vicinity of the proposed tunnel in order to establish preliminary subsurface profiles depicting the soil and bedrock conditions and the presence of fault zones.

2. Test Boring Program - Numerous test borings should be made along the location of the proposed tunnel. The program should be designed to investigate both soil and bedrock conditions. The depth of the test borings should extend an adequate distance below the invert elevation of the proposed tunnel, so that an accurate picture of bedrock conditions can be obtained.

3. Geophysical Borehole Logging - Selected boreholes should be logged by geophysical methods in order to establish known reference points for the seismic surveys and to aid in the correlation of the detailed information obtained during the test boring program. In addition, a great amount of data concerning resistivity, lithology, porosity, permeability, and rock density can be obtained through use of geophysical logging techniques. These logging techniques would include the following: induction logging, formation density logging, sonic logging, gamma-ray neutron logging, formation tester logging, and temperature logging.

4. Borehole Photography - In order to obtain additional information on bedrock strength and structural characteristics, the use of borehole photography is extremely helpful. Through the use of borehole photography, such important data as frequency of joints, presence of faults and shear zones, and attitude (strike and dip) of joints, cleavage, and faults can be obtained.

5. Pressure Meter Testing - Pressure meter testing should be performed in selected boreholes. By means of a pressure meter device, an estimate can be made of the in situ deformation characteristics of the bedrock at the depths of the proposed tunnel. From the deformation measurements the apparent in situ modules of elasticity of the rock can be computed. Additionally, through this type of testing, an indication can be obtained of the importance of jointing or other structural weaknesses.

6. Water Pressure Testing - Water pressure tests should be performed at selected boreholes for the purpose of determining the variations in permeability coefficients of the bedrock in order to ascertain the average rate of inflow to the tunnel. Another purpose of this type of testing is to determine the existence of highly pervious jointed or sheared zones, where a blow-in of rock material might occur.

7. Water Well Drilling and Testing - A program of well drilling and testing should be implemented. A number of wells should be drilled for testing and observation purposes. By means of a series of pumping and recharge tests, data can be obtained to determine the hydrologic parameters of the pertinent aquifers and to ascertain ground-water inflow and recharge conditions. The underlying purpose for this step in the investigative procedure is to provide information on potential aquifer pollution problems. It is imperative that the hydraulic grade line of the proposed tunnel below the piezometric level of the ground water. This will cause the tunnel to be subjected to external pressure, which would cause inward flow of ground water to the tunnel. As long as the tunnel is subject to external pressure, the hazard of ground water contamination does not exist. Any lowering of the piezometric level to below the hydraulic grade line of the tunnel would cause an outward flow from the tunnel thus creating the hazard of ground-water contamination. Some of the wells can be placed in locations that will permit their use as monitor wells after construction of the tunnel, so that a continuing check can be made to see that the system is operating properly.

Laboratory Testing

Soil Testing

Soil tests should be performed on split-spoon and undisturbed soil samples taken during the test boring program. The type of tests to be performed should include: moisture content, Atterberg limits, gradation analysis, unconfined compression, triaxial shear, direct shear, and consolidation. Through the use of these tests, the soils can be identified, and their strength characteristics can be evaluated. These data are particularly important in regard to the vertical access shafts to the tunnel and other structures related to the proposed facility.

Rock Testing

Laboratory testing of rock cores taken during the drilling program is a necessary part of the investigation. These cores should be examined carefully to determine rock quality, joint frequency, zones of weakness, other properties that could affect compression. Various hardness tests should be performed to determine the structural strength and drillability characteristics of the rock. Such tests will be of significant value in determining the optimum design and construction methods.

Table B-1

Estimated Cost Summary

Tunnel Construction for Surcharge Relief and Storage

Tunnel at $818.00/LF[1]	$10,585,000
Pumping Station	2,383,000
Shaft Construction	
Excavation	835,000
Concrete Work	2,855,000
Piping and Manholes	164,000
Boring and Jacking	187,000
Sluice Gates and Armor Plating	156,000
Sub-Total	$17,165,000
Construction and Escalation Contingency	2,574,000
TOTAL	$19,739,000

[1]Updated from ENR 1142 and increased for larger diameter (factor 0.6).

FIGURE B-1
GENERAL TUNNEL LOCATION

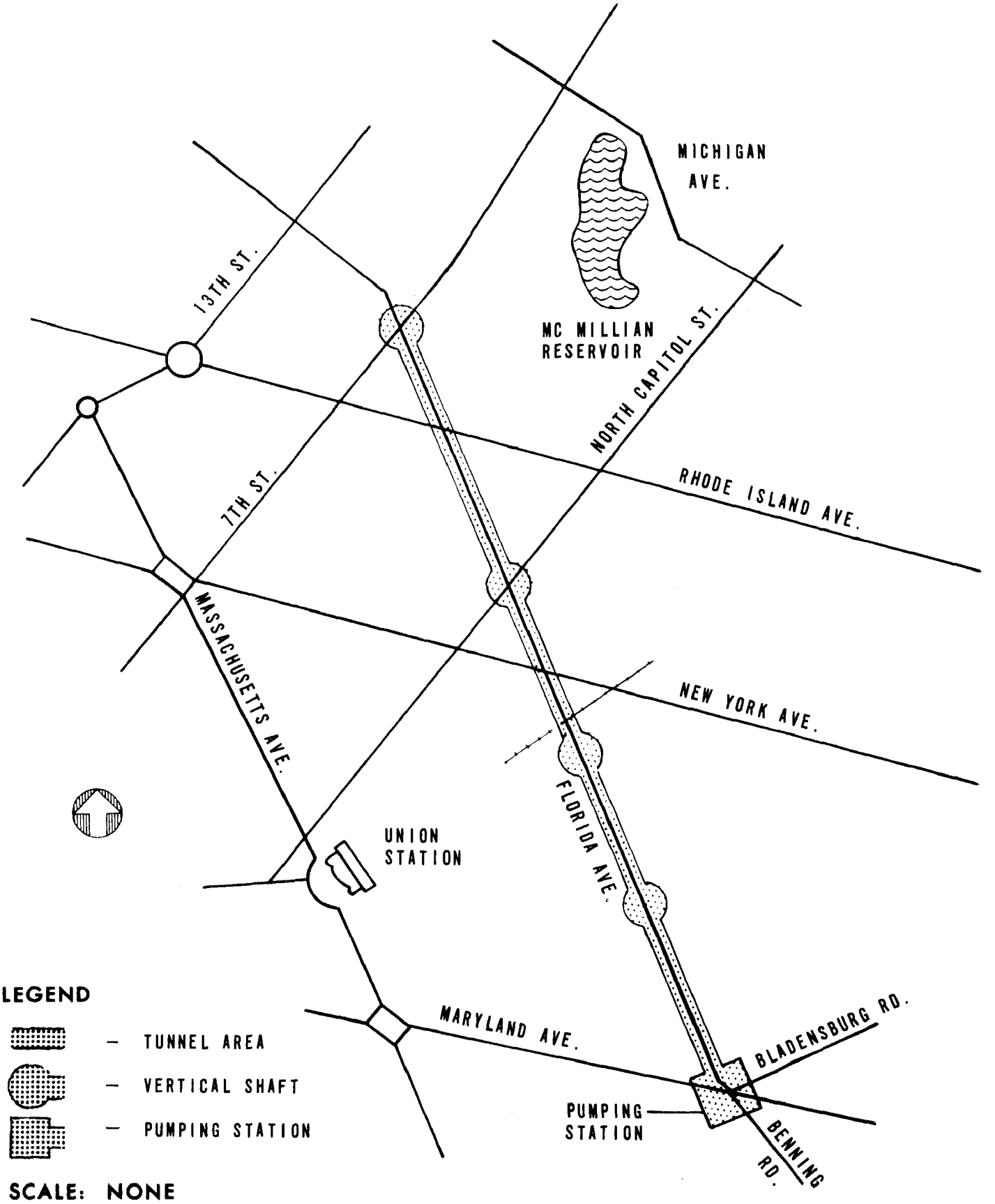

FIGURE B-2
GENERAL SCHEME VERTICAL SHAFT

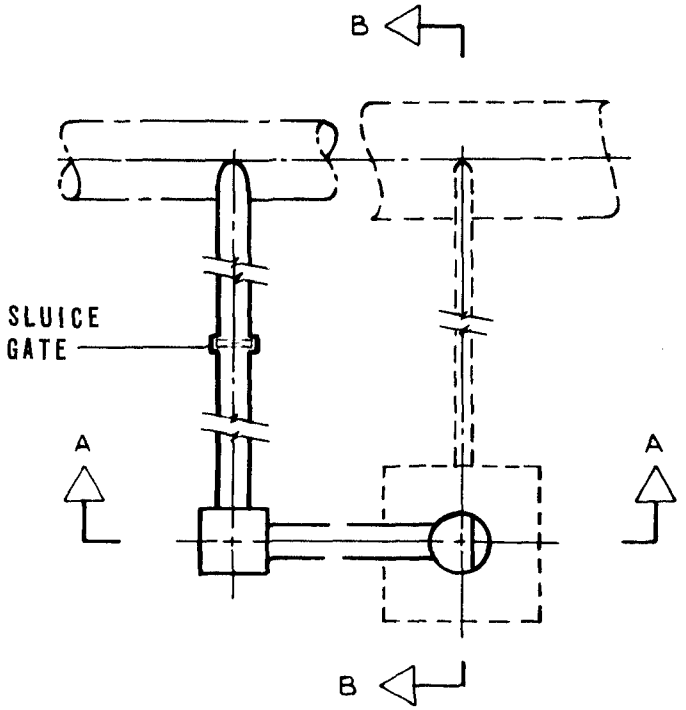

PLAN

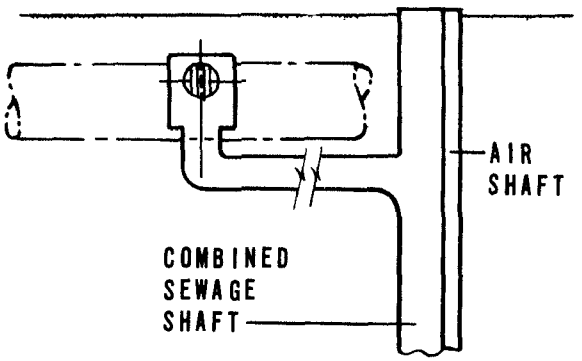

SECTION A-A

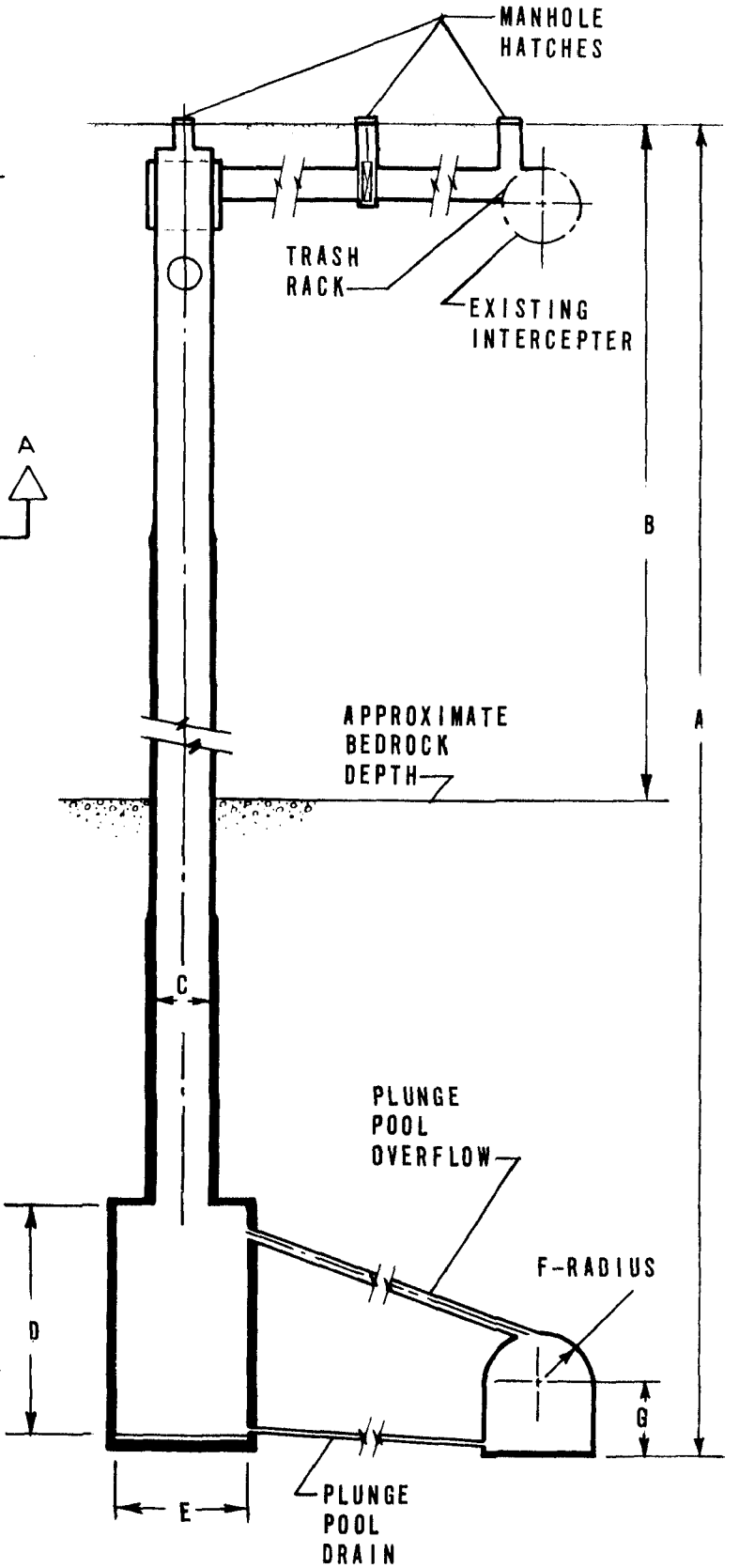

SECTION B-B

DIMEN.	LOC. 1	LOC. 2	LOC. 3	LOC. 4
A	356'	363'	367'	371'
B	0	110	170	220
C	12	15	15	12
D	60	64	61	81
E	32	40	40	42
F	15	15	15	15
G	17	17	17	17

APPENDIX C

PRELIMINARY SOIL AND FOUNDATION INVESTIGATION

The report of this investigation by Joseph S. Ward and Associates is annexed to this report as a separate volume. Significant portions of the above report have been excerpted and placed within the body of this report as required.

APPENDIX D

INVESTIGATION OF RAINFALL-RUNOFF RELATIONSHIPS

Methodology - Volume of Overflow

The volume of the surface runoff of rainfall from a particular area is determined by subtracting from the total amount of precipitation the losses due to interception by vegetation, infiltration into permeable soils, retention in surface depressions, and evaporation. Of these, infiltration and retention in depressions are the only losses of significance in urban drainage. Numerous runoff coefficients accounting for the combined effect of these losses have been widely reported; however, the use of these coefficients calls for extensive judgment because the coefficient will vary throughout the duration of the storm. It is more precise to account for these losses separately and to examine their variability through time.

The methodology employed to account for these losses involves the development of hyetographs. Intensity-duration-frequency relationships for the Washington, D.C. area have been formulated and plotted in a previous study using rainfall data collected during a 60-year period from 1894-1954. These relationships are defined in the following equation:

$$i_{avg} = \frac{a}{(t_d + b)^c} \tag{1}$$

where:

t_d = duration of storm corresponding to a period of maximum rainfall, minutes

i_{avg} = average intensity during particular duration, in/hr

a,b,c = constants for particular return frequencies

Using differential and integral calculus, the equation of the hyetograph is derived from equation (1) to be as follows:

$$i_b = a\left[\frac{1}{\left(\frac{t_b}{r} + c\right)^b} - \frac{b - \frac{t_b}{r}}{\left(\frac{t_b}{r} + c\right)^{b+1}}\right] \tag{2a}$$

$$i_a = a\left[\frac{1}{\left(\frac{t_a}{1-r} + c\right)^b} - \frac{b - \frac{t_a}{1-r}}{\left(\frac{t_a}{1-r} + c\right)^{b+1}}\right] \tag{2b}$$

where:

t_b = time before the peak intensity, minutes

t_a = time after the peak intensity, minutes

i_b = instantaneous intensity before the peak intensity, in/hr

i_a = instantaneous intensity after the peak intensity, in/hr

r = portion of any duration of maximum rainfall occurring before the peak intensity NOTE: $t_b = rt_d$, $t_a = (1-r)t_d$

a,b,c = constants from equation (1)

Essential to this study is an analysis of the consequences of the three-month rainfall; however, the amounts of rainfall occurring with a frequency interval of less than two years have not been determined in past studies for the Washington, D.C. area. To determine the three-month rainfall, an array was developed using partial duration series data on excessive precipitation collected by the U.S. Weather Bureau for the ten-year period 1960-1969. In this period, there were seventy-six storm events with precipitation values in excess of the minimum values of interest as defined by the U.S. Weather Bureau. For each storm event, the U.S. Weather Bureau listed the maximum precipitation occurring for specific durations (12 durations were listed, ranging from 5 to 180 minutes). The seventy-six storms were ranked for each of the twelve durations. Using the Weilbull formula[5], the three-month storm is defined as between the 40th and the 41st ranking, and precipitation values were selected accordingly from the array. An average intensity-duration-frequency equation was derived for the selected values, and for the a, b, and c constants of this equation of the hyetograph.

A study (17) of the storms occurring in the Chicago area showed that r in equation (2) has a weighted average value of 3/8. A detailed examination of twelve consecutive months of rainfall as recorded at the Washington National Airport Station indicates that a value of 3/8 is reasonable for the Washington, D.C. area. Hyetographs for the relevant storm frequencies were developed on the basis of this value and of the values for a, b, and c. As an example, Figure 1 in the main report is the hyetograph for the 5-year frequency storm.

---

[5] where: $Tr = \frac{N + 1}{m}$

Tr = return frequency
N = number of periods of record
m = position number of event ranked in order of descending magnitude

Research (18) indicates that the capacity which a soil exhibits for infiltration varies little with surface slope and depends primarily on soil porosity, ground cover, and antecedent rainfall. Infiltration capacity curves have been developed for various soil and surface conditions, and two of the mostly commonly used curves are shown in Figure 2 of the main report.

The capacity for infiltration is relatively high at the beginning of precipitation and decreases rapidly to a rather definite minimum value. During periods when the rate of precipitation is less than the infiltration capacity, all precipitation is infiltrated; when precipitation is greater than the infiltration capacity, excess runoff is produced in an amount equal to the difference between the precipitation rate and infiltration capacity. Consequently, an analysis of runoff requires the simultaneous examination of precipitation rates and infiltration capacities as they vary through the duration of the storm.

Figure 3 (of the main report) is a graph of the accumulated mass of rainfall and the accumulated mass of infiltration for residential type pervious surfaces versus time from beginning of significant rainfall. For storms in which the precipitation rate is initially less than the infiltration capacity, it is reasonable to assume the same amount of infiltration will occur as if the infiltration capacity was exceeded, but at some later time in the course of the storm. Therefore, the time of the start of excess is found by shifting the accumulated mass of infiltration curve along the time axis until it is tangent to the accumulated mass of rainfall curve. The actual mass infiltrated follows the trend of the accumulated mass of rainfall from zero time to the point of tangency, and from there it follows the offset curve of accumulated mass of infiltration up to the point when infiltration again equals the rate of precipitation. To define the latter point, the infiltration capacity curve is plotted with the hyetograph but at a time-offset equal to the offset of the accumulated mass of infiltration curve. The point at which infiltration again equals precipitation is defined as the second intersection of their curves. This procedure is illustrated in Figure 4 of the main report.

After the precipitation rate again drops below the infiltration capacity, the deficit is satisfied in part by infiltration from runoff traveling overland. It is conservative, but reasonable, to assume that for an urban area of moderate grade and intense development such as the Northeast Boundary Trunk Sewer basin, the time of overland travel on a pervious surface is so short that this type of infiltration is insignificant. On this basis, the rainfall is excess of infiltration is defined as the difference between the accumulated mass of rainfall curve and the actual accumulated mass infiltration curve at the point when the rate of precipitation equals for the second time the infiltration capacity. The rainfall in excess of infiltration is shown in Figure 3 of the main report.

In this study, the rainfall in excess of infiltration was determined for pervious surfaces characteristic of residential and commercial-industrial areas. It is assumed in this study that infiltration is negligible for impervious surfaces and that runoff from an impervious onto a pervious surface is insignificant, or at least the effect of such is negligible. A past study by the D.C. Department of Sanitary Engineering provides a sound basis for determining the area of pervious and impervious surfaces in the Northeast Boundary Trunk Sewer basin. In the study, the pervious and impervious areas of typical blocks of the city were reported as follows:

Block Type	Pervious	Impervious
Residential, single house	54.1 percent	45.9 percent
Residential, row house	35.8 percent	64.2 percent
Commercial, neighborhood	25.8 percent	74.2 percent

The overall surface characteristics of the Northeast Boundary Trunk Sewer basin were determined by assuming that zoning categories R-1 and R-2 correspond to the single house residential block type; R-3, R-4, and R-5 correspond to row house residential block type; C-1, C-2, C-M, and M correspond to neighborhood and commerical block type; park area is totally pervious; and C-3 and C-4 are totally impervious. On this basis, the surface of the drainage area is 57.8 percent impervious, 37.6 percent residential-type pervious, and 4.6 percent commercial-type pervious.

It should be noted that any hyetograph is asymptotic to the time axis. However, in this study the hyetograph was not extended beyond the point at which rainfall intensity is less than 0.2 inches/hour. For pervious surfaces, the minimum infiltration is greater than 0.2 inches/hour and there is no need to examine rainfall past this point. Nevertheless, prior to the peak of a storm the mass of rainfall preceding an intensity of 0.2 inches/hour may be significant. To account for this, it was assumed that this mass is equal to the volume of runoff discharging to the East Side Interceptor prior to the closure of the sluice gate. For impervious surfaces, the total amount of precipitation for each rainfall frequency examined was the 24-hour duration value read from the updated Washington, D.C. intensity-duration-frequency curves published by the Special Studies Branch of the Office of Hydrology of the U.S. Weather Bureau. These curves represent National Airport records for 1951-1969 combined with City Office records for 1896-1897 and for 1899-1950.

A significant volume of the rainfall in excess of infiltration is retained in surface depressions, and it either evaporates or infiltrates after the storm subsides. Observations made during periods of heavy rainfall for the flat topography of Chicago suggest that the overall average depth of depression storage is 0.25 inches on pervious areas and 0.06 inches on paved areas (19). In a widely accepted design manual (20), various investigators have observed that in urban areas of moderate grade the overall average depth of surface depressions is about 0.05

inches for impervious surfaces and about 0.10 inches for pervious surfaces. The values reported in the design manual were assumed to apply to the Washington, D.C. area and were subtracted from the mass of rainfall in excess of infiltration.

The application to a large drainage area of rainfall data collected at one point outside the area requires careful interpretation of two phenomena:

a. The difference in prevailing physical conditions at two separate, but proximate, locations may result in different extreme rainfall data.

b. Average depth of rainfall over a large area is less than maximum point rainfall.

As for the former, the atmospheric forces of extreme storms are greater than the local effects of terrain and thermal patterns in the Washington area, and there should be no difference in extreme rainfall data (i.e. intensity versus frequency) at two separate sites in the area. To account for the latter, a correction factor of 98 percent was extrapolated from the area-depth relationship used by the D.C. Department of Sanitary Engineering. The volume of runoff from the Northeast Boundary Trunk Sewer drainage basin is determined by multiplying the mass of rainfall (less abstractions) by the appropriate surface area, summing, and reducing by two percent to account for the depth-area relationship.

In addition to the Northeast Boundary Trunk Sewer, there are ten separate storm sewers which discharge directly into Kingman Lake. Any development of the lake for swimming will require their diversion, and it is only reasonable that they be diverted to the storage facility that would be constructed to contain overflow from the Northeast Boundary Trunk Sewer. Although the drainage area served by these sewers is outside of the Northeast Boundary Trunk Sewer drainage basin, the runoff conveyed by the sewers must be included in any design considerations. The drainage area served by the three sewers is 350 acres, and its surface is characterized as being 20 percent residential pervious and 80 percent impervious. The same methodology was used to determine the runoff from this area.

A significant volume of dry-weather sewage flow (DWF) is also included in the overflow from the Northeast Boundary Trunk Sewer. Examination of a 1957 study (21) indicated that storms with a return frequency interval of 1 year or more will each result in overflow with a duration of at least 10 hours, while the more frequent storms will have an overflow duration of approximately 6 hours each. These values were used along with a DWF of 27.4 mgd to determine the volume of sewage included in the combined overflow.

Results-Volume of Overflow

In review, there are three sources of overflow:

1. Storm water runoff from the Northeast Boundary Trunk Sewer,

2. Storm water runoff from the separate storm sewers adjacent to Kingman Lake, and

3. The dry-weather sewage flow.

The storm water runoff originates from impervious surfaces, pervious residential surfaces, and pervious industrial-commercial surfaces. The overflow volumes for a range of rainfall frequencies were determined using the discussed methodology. These results are shown in Figure 5 and Table 3 of the main report.

APPENDIX E

LITERATURE EVALUATION OF ALTERNATIVE WASTEWATER TREATMENT PROCESSES

Microstraining of Combined Sewer Overflows

The application of the Microstrainer to the removal of suspended solids has been field tested in Philadelphia by the Crane Company. Under a research grant from the FWPCA (Contract No. 14-12-136) (22), a pilot test unit was installed at a sewer outfall serving an 11-acre area on the western side of the City. The system was operated intermittently over a 9-month period in 1969.

The Microstrainer test unit consisted of a horizontal rotating drum, 5 feet in diameter and 3 feet in length, covered by a stainless steel woven-wire fabric. Raw water entered one end of the partially submerged drum to flow radially outward through the fabric. Suspended solids were retained on the inside of the fabric, which had openings of 23 microns on a side. As the drum rotated, dirty fabric emerged from the water and backwash jets flushed the retained solids from the fabric into an intercepting hopper suspended inside the drum. In a full-scale installation, the solids would be conveyed to a sewage treatment plant for disposal or handled in an on-site disposal system.

Suspended solids removal on the order of 65-95 percent (volatile suspended solids removal of 50-90 percent) appears feasible for this system. The paucity of data prevents a more definitive conclusion as to the solids removal capability of the Microstrainer under the operating conditions of this study. Data on the removal of BOD and fecal coliform bacteria were non-conclusive since increases in BOD and fecal coliform were observed as often as not.

The system was operated during a total of 26 storm events. During 17 of those events, the filtration rate was less than 10 gallons per minute per square foot of submerged screen surface area; six runs were made at rates of between 10 and 15 gpm/sq.ft. and three runs were made where the rate exceeded 15 gpm/sq.ft. (once each at 15.6, 27.2 and 46.0 gpm/sq.ft.). During those 9 runs at a rate of 10 or more gpm/sq.ft., the average suspended and volatile suspended solids removals were 76 and 69 percent, respectively, while the average effluent concentrations were 28 and 9 mg/L, respectively. Influent concentrations of suspended and volatile suspended solids were 195 mg/L and 34 mg/L, respectively. Influent BOD_5 averaged 245 mg/L.

Cost data has been developed by the Crane Company for a 10-mgd treatment plant experiencing forty overflow events per year and were based upon a flow rate of 45 gpm/sq.ft. of submerged filter. The capital cost of such a plant including equipment procurement, installation and building, but excluding cost of land and engineering fees was reported to be $79,500. Operating cost including maintenance, supplies, and replacement parts at 1 percent of capital cost has been set at $800 per year.

However, the use of a filtration rate of 45 gpm/sq.ft. as the basis of the cost analysis does not appear justified on the basis of the manufacturer's data since sixty-five percent of the runs were made at less than 10 gpm/sq.ft. and only one run was made at a rate greater than 30 gpm/sq.ft. Therefore, a flow rate of 10 gpm/sq.ft. would be a more reasonable design rate and the design capacity for a 50-mgd plant would be 22.5 times the capacity assumed by the Crane Company for their cost analysis. A reasonable cost scale-up would be approximately 60 percent of the capacity scale-up factor, or about 13.5 times this estimate.

On this basis, the capital cost estimate would be approximately $1,070,000, while the annual operating cost would be at a minimum of 1 percent of capital cost, or $10,700 per year. Estimates have also been made on the basis of $60,000 per Microstrainer unit and a requirement of seventeen units, each having a submerged surface area of 210 square feet. Capital cost, in this case, would then be $1,020,000 and the estimated operating cost would be $10,200 per year.

The firm of Cornell, Howland, Hayes and Merryfield (23), under contract with FWPCA, evaluated the applicability of Rotary Screen manufactured by SWECO, Inc., for primary treatment of combined sewer overflow. The rotary screening device is very similar in principle to the microstrainer, and utilizes a stainless steel wire screen. Otherwise, the equipment involved in this process is very different.

In this unit, raw water is fed into the top of the apparatus to discharge against a stationary distribution dome which changes the direction of flow from vertical to horizontal (radial). The feed water then strikes a rotating (60 rpm) 165-mesh collar screen at a velocity of approximately 11 feet per second. Most of the feed water (70-90 percent) penetrates the screen and is discharged as screened effluent to be disinfected outside the screening unit. The screens are cleaned by a hot solution of concentrated caustic (sodium hydroxide) being sprayed by high pressure nozzles for 30 seconds after a 4-1/2 minute screening cycle. The retained solids drop into a solids discharge pipe and are taken out of the system.

Tests were performed by the manufacturer under the FWPCA grant on both combined sewer overflow and undiluted raw sewage. The investigators describe the operating performance of their unit as comparable to primary clarification. Suspended solids removal of 34 percent was reported from an influent concentration of 122 mg/L leaving an effluent concentration of 87 mg/L. COD was reduced by 27 percent from an initial concentration of 300 mg/L in the feed water. Settleable solids of 5.7 mg/L were 98 percent removed. The test run which produced these results was terminated after 6 hours due to a screen failure.

The operating performance of the screen was concluded to be the limiting component of the entire unit. Ninety percent of the screen failures experienced in the study were due to hydraulic overloading; 10 percent were attributed to punctures and caused by objects contained in the feed water.

A cost analysis was developed for an automated 25-mgd treatment plant housed in a structure with lateral dimensions of 30 feet by 75 feet. Based on a throughput capacity of 130 gpm/sq.ft., the proposed plant would consist of ten 2.5-mgd screening units. The capital cost was estimated to be $560,000 including the design engineering fee and excluding land costs and costs for disinfection. The operation and maintenance cost, based on a screen life of 500 hours, was estimated to be $18,500/year. However, the manufacturer's operating data on the rotary screening device, does not support a life expectancy on the screen of more than 6-10 hours since the screen required replacement of their operation after a 6-hour run. Consequently, a screen-life of 500 hours seem highly optimistic and not a suitable basis for a cost analysis.

If a 6-10 hour life expectancy is assumed, the annual operating and maintenance cost would be more in the range of $200,000/year for the 25-mgd plant. By scaling the cost estimates up to a 50-mgd capacity plant, the capital cost would be approximately $1,000,000 and the annual operation/maintenance cost would exceed $400,000 per year.

In conclusion, the rotary screening device does not appear to be applicable at this time to this project due to two factors: 1) effluent quality would not meet the requirements of either a pretreatment or a final treatment facility; 2) the high capital and operating and maintenance cost would be prohibitive for the degree of removal obtained in the manufacturer's studies.

U-Tube Aeration

A U-Tube aerator consists of two basic components: a conduit to provide a vertical U-shaped flow path, and a device for entraining air or oxygen into the streamflow in the down-leg of the conduit. The conduit may be a circular or rectangular (cross section) tube in the shape of a U; or a pair of concentric pipes with flow downward through one and upward through the other; or a trench (e.g. immediately downstream from the crest of a weir or dam) with flow downward and under a dividing baffle wall to flow upward on the other side. The entrainment device is one of two types: aspirator, or compressor and diffuser. In either case, the air bubbles are carried along the down-leg of the tube because the water velocity exceeds their bouyant rising velocity.

The unique features of the U-tube process are fundamentally two-fold: both contact time and the dissolved oxygen deficit are increased and efficiently utilized. Increased pressures, controlled surface area, and turbulence all help to increase oxygen transfer efficiency both in terms of oxygen transferred per unit mass of water treated and oxygen transferred per unit of energy. In addition to being capable of operation under a positive, zero or negative head (by proper positioning of entrainment device), the U-tube system requires virtually no moving parts and requires no operating labor and little maintenance. The advantage of high transfer efficiency-low energy input requirement also serves to limit the process to aeration; i.e. the device is not an effective mixer.

The U-tube aeration process has a limited potential application in each of the three major retaining basins of the Kingman Lake Project. In the storage basin, aerobic conditions must be maintained. The dissolved oxygen requirements of the raw wastewater are such that the U-tube process would not be efficiently applied. Speece (24) noted that U-tube aeration would be most applicable to situations involving relatively low DO deficits, i.e. those situations in which conventional aeration systems are most poorly suited. The boating and fishing lake, with its relatively high DO requirements for fish life, appears to be suitable by this criterion. Mitchell and Lev have estimated the cost of post-aeration of treated (secondary) effluent for 10- and 100-mgd plants. The following cost data are interpolations from the data of Mitchell and Lev.

Year-round U-tube aeration of 5 mgd would cost approximately $2,600 per year and would require an initial capital outlay of $25,000. These data are based on the assumption of no available head, and therefore, include cost of pumps and power. In comparison, diffused aeration or mechanical aeration (of equivalent scale) would involve capital costs of $31,000 or $36,000, respectively. In the same order, annual operating costs would be $4,200 and $7,700.

Ozonation as a Unit Process for Treatment of Combined Sewer Overflows

Ozone has been proven capable of removing chemical oxygen demand (COD) and total organic carbon (TOC) from wastewater treatment plant effluents. Used as a disinfectant, ozone is both bactericidal and viricidal. It also has the ability to neutralize objectionable odors and to bleach colors from water. An advantage of ozone over chlorine is its ability to reduce chlorine demand and to circumvent the formation of objectionable tastes and odors (such as are produced by nitrogen trichloride during breakpoint chlorination in the presence of undecomposed urea). This feature may be of particular significance when the treated water is to be recycled.

There are three potential applications for ozonation in the Kingman Lake Project: 1) removal of dissolved organic materials; 2) disinfection; and 3) odor control.

The use of ozone as a tertiary treatment process has been studied by Air Reduction Company, Inc. (Airco) under a contract (No. 14-12-114) with the Federal Water Quality Administration (FWQA) (25). Given the task of developing an efficient contacting process, Airco found multi-stage, concurrent contacting helpful to the achievement of high ozone-utilization efficiency, which is the key to the economic feasibility of this process. Airco contends that the ozonation process can be automated for low-maintenance service.

As a tertiary treatment process, ozone was found in the Airco study to be competitive with activated carbon for waters containing less than about 35 mg/L COD. Such an effluent is anticipated from multi-media filtration following coagulation and sedimentation of combined sewer overflows. The

Airco study achieved COD reduction from 35 mg/L to less than 15 mg/L, and BOD_5 removals from 36 mg/L to less than 5 mg/L. This performance was accompanied by almost complete removal of color, odor, turbidity, bacteria (total removal), and surface active detergents. This degree of treatment required a total contact time of 60 minutes at an ozone dosage of 10 to 20 mg/L.

For disinfection purposes, ozone has both advantages and disadvantages in comparison with chlorine. Ozone is known to be more viricidal than chlorine. However, dissolved ozone decomposes rapidly in water, having a half-life of only 20 minutes. An ozone residual is, therefore, not available to ensure continued or residual protection from expected recontamination of bathing water. Any application on the swimming lake would, therefore, require additional or supplementary application of chlorine or iodine for the residual effect. Disinfection of fishing and boating water is a different application in that a residual effect (harmful to aquatic life) is undesirable. Thus, chlorine residual would necessitate removal, whereas the lack of ozone residual would be an advantage.

Odor control at the storage basin may be achieved by injecting ozone into the air over the enclosed basin at various vent points. Sufficient excess ozone would be available for this application from the disinfection unit. Ozonation generally involves high capital and operating costs and low labor and maintenance costs. The two major expense items are plant amortization and power costs.

Tertiary treatment for COD removal by ozonation would require a capital expenditure of $3,400,000 and an annual operating cost of $386,000 per year. Disinfection by ozone using air feed would cost $530,000 capital and $135,000 yearly for operation. Provision of a (chlorine) residual would add to these costs for initial disinfection. Odor control, in the absence of ozonation for COD removal, would cost on the order of $90,000 for an initial capital outlay, and yearly cost of operation would be approximately $20,000.

BIBLIOGRAPHIC:

ROY F. WESTON, Conceptual Engineering Report, Kingman Lake Project, FWQA Program No. 11023 FIX, October, 1970.

ABSTRACT:

This conceptual engineering study concerns the reclamation of combined sewer overflows and utilization of the reclaimed waters in a major water-oriented recreational facility for the District of Columbia. The investigation encompasses a comprehensive solution of environmental problems by proposing multi-use objectives and facilities.

Principal objectives of the project included: 1) evaluation of rainfall runoff relationships for sizing of storage and treatment plant capacities; 2) confirmation of treatment feasibility using filtration and an activated carbon process; and 3) development of sufficient data for preliminary design purposes.

ACCESSION NO.

KEY WORDS:

Activated Carbon

Adsorption

Combined Sewers

District of Columbia

Overflows

Pollution Abatement

Precipitation

Recreation Facilities

Water Storage

Water Reclamation

BIBLIOGRAPHIC:

ROY F. WESTON, Conceptual Engineering Report, Kingman Lake Project, FWQA Program No. 11023 FIX, October, 1970.

ABSTRACT:

This conceptual engineering study concerns the reclamation of combined sewer overflows and utilization of the reclaimed waters in a major water-oriented recreational facility for the District of Columbia. The investigation encompasses a comprehensive solution of environmental problems by proposing multi-use objectives and facilities.

Principal objectives of the project included: 1) evaluation of rainfall runoff relationships for sizing of storage and treatment plant capacities; 2) confirmation of treatment feasibility using filtration and an activated carbon process; and 3) development of sufficient data for preliminary design purposes.

ACCESSION NO.

KEY WORDS:

Activated Carbon

Adsorption

Combined Sewers

District of Columbia

Overflows

Pollution Abatement

Precipitation

Recreation Facilities

Water Storage

Water Reclamation

BIBLIOGRAPHIC:

ROY F. WESTON, Conceptual Engineering Report, Kingman Lake Project, FWQA Program No. 11023 FIX, October, 1970.

ABSTRACT:

This conceptual engineering study concerns the reclamation of combined sewer overflows and utilization of the reclaimed waters in a major water-oriented recreational facility for the District of Columbia. The investigation encompasses a comprehensive solution of environmental problems by proposing multi-use objectives and facilities.

Principal objectives of the project included: 1) evaluation of rainfall runoff relationships for sizing of storage and treatment plant capacities; 2) confirmation of treatment feasibility using filtration and an activated carbon process; and 3) development of sufficient data for preliminary design purposes.

ACCESSION NO.

KEY WORDS:

Activated Carbon

Adsorption

Combined Sewers

District of Columbia

Overflows

Pollution Abatement

Precipitation

Recreation Facilities

Water Storage

Water Reclamation

Laboratory studies not only demonstrated process feasibility, but showed the need for including flocculation and sedimentation for removal of minute particles, together with chlorine and iodine addition for maximum disinfection. The recommended storage/treatment plan provides for a 175 million gallon storage basin, a 50 million-gallon-per-day reclamation facility and two 46-acre swimming and boating lakes.

Cost effectiveness (Cost/Benefit Ratio) of the project, as envisioned, has been indicated to be 1.6 at an estimated total project cost of $45,200,000, and an estimated annual operating cost of $1,777,000. Implementation of the proposed plan would not only provide a least-cost alternative over single-purpose projects to attain identical objectives, but would also reduce the annual pollution now discharged by the Northeast Boundary Trunk Sewer by approximately 99 percent.

This report was submitted in fulfillment of Program No. 11023 FIX under Contract No. 14-12-829 between the Federal Water Quality Adminstration and Roy F. Weston, Inc.

Laboratory studies not only demonstrated process feasibility, but showed the need for including flocculation and sedimentation for removal of minute particles, together with chlorine and iodine addition for maximum disinfection. The recommended storage/treatment plan provides for a 175 million gallon storage basin, a 50 million-gallon-per-day reclamation facility and two 46-acre swimming and boating lakes.

Cost effectiveness (Cost/Benefit Ratio) of the project, as envisioned, has been indicated to be 1.6 at an estimated total project cost of $45,200,000, and an estimated annual operating cost of $1,777,000. Implementation of the proposed plan would not only provide a least-cost alternative over single-purpose projects to attain identical objectives, but would also reduce the annual pollution now discharged by the Northeast Boundary Trunk Sewer by approximately 99 percent.

This report was submitted in fulfillment of Program No. 11023 FIX under Contract No. 14-12-829 between the Federal Water Quality Adminstration and Roy F. Weston, Inc.

Laboratory studies not only demonstrated process feasibility, but showed the need for including flocculation and sedimentation for removal of minute particles, together with chlorine and iodine addition for maximum disinfection. The recommended storage/treatment plan provides for a 175 million gallon storage basin, a 50 million-gallon-per-day reclamation facility and two 46-acre swimming and boating lakes.

Cost effectiveness (Cost/Benefit Ratio) of the project, as envisioned, has been indicated to be 1.6 at an estimated total project cost of $45,200,000, and an estimated annual operating cost of $1,777,000. Implementation of the proposed plan would not only provide a least-cost alternative over single-purpose projects to attain identical objectives, but would also reduce the annual pollution now discharged by the Northeast Boundary Trunk Sewer by approximately 99 percent.

This report was submitted in fulfillment of Program No. 11023 FIX under Contract No. 14-12-829 between the Federal Water Quality Adminstration and Roy F. Weston, Inc.

1 Accession Number	2 Subject Field & Group	SELECTED WATER RESOURCES ABSTRACTS INPUT TRANSACTION FORM

5 Organization

ROY F. WESTON, Inc., West Chester, Pennsylvania

6 Title

CONCEPTUAL ENGINEERING REPORT: KINGMAN LAKE PROJECT,

10 Author(s)	11 Date	12 Pages	15 Contract Number
Neijna, Michael S. Woldman, Michael L. Buckingham, Phillip L. Coleman, Ronald E. Simons, John L.	October, 1970	149 p.	FWQA 14-12-829
	16 Project Number FWQA Program No. 11023 FIX		21 Note

22 Citation

23 Descriptors (Starred First)

*Filtration, *Flow Measurement, *Rainfall-Runoff Relationships, *Recreational Facilities, *Underground Storage, Rainfall Intensity, Depth-Area-Duration Analysis, Storm Runoff, Overflow, Geology, Organic Loading, Pollutants, Standards, Boating, Fishing, Swimming, Wastewater Treatment, Activated Carbon, Disinfection, Storage Capacity, Sewers, Tunnel Design, Technical Feasibility, Annual Costs, Capital Costs, Cost-Benefit Analysis

25 Identifiers (Starred First)

*Combined Sewers

27 Abstract

This conceptual engineering study concerns the reclamation of combined sewer overflows and utilization of the reclaimed waters in a major water-oriented recreational facility for the District of Columbia. The investigation encompasses a comprehensive solution of environmental problems by proposing multi-use objectives and facilities. Principal objectives of the project included: 1) evaluation of rainfall runoff relationships for sizing of storage and treatment plant capacities; 2) confirmation of treatment feasibility using filtration and an activated carbon process; and 3) development of sufficient data for preliminary design purposes. Laboratory studies not only demonstrated process feasibility, but showed the need for including flocculation and sedimentation for removal of minute particles, together with chlorine and iodine addition for maximum disinfection. The recommended storage/treatment plan provides for a 175 million gallon storage basin, a 50 million-gallon-per-day reclamation facility and two 46-acre swimming and boating lakes. Cost effectiveness (Cost/Benefit Ratio) of the project, as envisioned, has been indicated to be 1.6 at an estimated total project cost of $45,200,000, and an estimated annual operating cost of $1,777,000. Implementation of the proposed plan would not only provide a least-cost alternative over single-purpose projects to attain identical objectives, but would also reduce the annual pollution now discharged by the Northeast Boundary Trunk Sewer by approximately 99 percent.

Abstractor John L. Simons

Institution ROY F. WESTON, Inc.

WR;102 (REV. OCT. 1968)
WRSIC

SEND TO: WATER RESOURCES SCIENTIFIC INFORMATION CENTER
U.S. DEPARTMENT OF THE INTERIOR
WASHINGTON, D.C. 20240

☆GPO 820-466

Continued from inside front cover....

11022 --- 08/67	Phase I - Feasibility of a Periodic Flushing System for Combined Sewer Cleaning
11023 --- 09/67	Demonstrate Feasibility of the Use of Ultrasonic Filtration in Treating the Overflows from Combined and/or Storm Sewers
11020 --- 12/67	Problems of Combined Sewer Facilities and Overflows, 1967, (WP-20-11)
11023 --- 05/68	Feasibility of a Stabilization-Retention Basin in Lake Erie at Cleveland, Ohio
11031 --- 08/68	The Beneficial Use of Storm Water
11030 DNS 01/69	Water Pollution Aspects of Urban Runoff, (WP-20-15)
11020 DIH 06/69	Improved Sealants for Infiltration Control, (WP-20-18)
11020 DES 06/69	Selected Urban Storm Water Runoff Abstracts, (WP-20-21)
11020 --- 06/69	Sewer Infiltration Reduction by Zone Pumping, (DAST-9)
11020 EXV 07/69	Strainer/Filter Treatment of Combined Sewer Overflows, (WP-20-16)
11020 DIG 08/69	Polymers for Sewer Flow Control, (WP-20-22)
11023 DPI 08/69	Rapid-Flow Filter for Sewer Overflows
11020 DGZ 10/69	Design of a Combined Sewer Fluidic Regulator, (DAST-13)
11020 EKO 10/69	Combined Sewer Separation Using Pressure Sewers, (ORD-4)
11020 --- 10/69	Crazed Resin Filtration of Combined Sewer Overflows, (DAST-4)
11024 FKN 11/69	Storm Pollution and Abatement from Combined Sewer Overflows-Bucyrus, Ohio, (DAST-32)
11020 DWF 12/69	Control of Pollution by Underwater Storage