United States
Environmental Protection
Agency

Industrial Environmental Research
Laboratory
Research Triangle Park NC 27711

EPA-600/7-78-184b
September 1978

EPA

Environmental Assessment Data Base for Coal Liquefaction Technology:

Volume II. Synthoil, H-Coal, and Exxon Donor Solvent Processes

Interagency Energy/Environment R&D Program Report

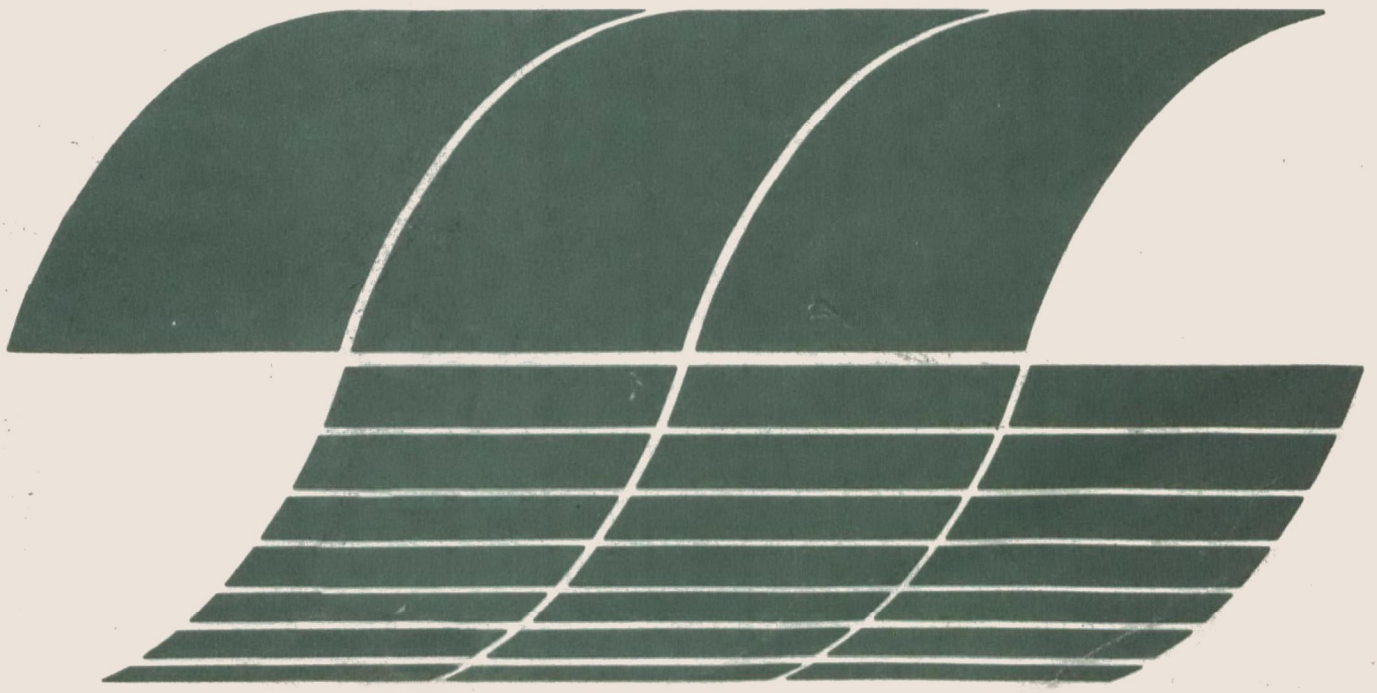

RESEARCH REPORTING SERIES

Research reports of the Office of Research and Development, U.S. Environmental Protection Agency, have been grouped into nine series. These nine broad categories were established to facilitate further development and application of environmental technology. Elimination of traditional grouping was consciously planned to foster technology transfer and a maximum interface in related fields. The nine series are:

1. Environmental Health Effects Research
2. Environmental Protection Technology
3. Ecological Research
4. Environmental Monitoring
5. Socioeconomic Environmental Studies
6. Scientific and Technical Assessment Reports (STAR)
7. Interagency Energy-Environment Research and Development
8. "Special" Reports
9. Miscellaneous Reports

This report has been assigned to the INTERAGENCY ENERGY-ENVIRONMENT RESEARCH AND DEVELOPMENT series. Reports in this series result from the effort funded under the 17-agency Federal Energy/Environment Research and Development Program. These studies relate to EPA's mission to protect the public health and welfare from adverse effects of pollutants associated with energy systems. The goal of the Program is to assure the rapid development of domestic energy supplies in an environmentally-compatible manner by providing the necessary environmental data and control technology. Investigations include analyses of the transport of energy-related pollutants and their health and ecological effects; assessments of, and development of, control technologies for energy systems; and integrated assessments of a wide range of energy-related environmental issues.

REVIEW NOTICE

This report has been reviewed by the participating Federal Agencies, and approved for publication. Approval does not signify that the contents necessarily reflect the views and policies of the Government, nor does mention of trade names or commercial products constitute endorsement or recommendation for use.

This document is available to the public through the National Technical Information Service, Springfield, Virginia 22161.

EPA-600/7-78-184b

September 1978

Environmental Assessment Data Base for Coal Liquefaction Technology: Volume II. Synthoil, H-Coal, and Exxon Donor Solvent Processes

by

C. Leon Parker and Dewey I. Dykstra, Editors

Hittman Associates, Inc.
9190 Red Branch Road
Columbia, Maryland 21045

Contract No. 68-02-2162
Program Element No. EHE623A

EPA Project Officer: William J. Rhodes

Industrial Environmental Research Laboratory
Office of Energy, Minerals, and Industry
Research Triangle Park, NC 27711

Prepared for

U.S. ENVIRONMENTAL PROTECTION AGENCY
Office of Research and Development
Washington, DC 20460

ABSTRACT

This report was prepared as part of an overall environmental assessment program for the technology involved in the conversion of coal to clean liquid fuels. The program is being directed by the Fuel Process Branch of the Environmental Assessment and Control Division of the Industrial Environmental Research Laboratory at Research Triangle Park, North Carolina. The two volumes of this report plus the Standards of Practice Manual (SPM) for the Solvent Refined Coal Liquefaction Process, EPA-600/7-78-091, represent the current data base for the environmental assessment of coal liquefaction technology. Volume I, Systems for Fourteen Liquefaction Processes, provides a summary of pertinent information about 14 of the prominent coal liquefaction systems now under development. It provides a brief process description, a diagram of the system, and a list of the materials entering and leaving the system. The processes required to produce clean liquid fuels from coal are divided into discrete operations. Each of these operations is then further divided into discrete modules, with each module having a defined function and identifiable raw materials, products, and discharge streams. Volume II, Detailed Discussion of Synthoil, H-Coal, and Exxon Donor Solvent Processes, is an environmental characterization report covering three selected coal liquefaction systems. It provides documentation and evaluation of existing environmentally significant data.

Environmental characterization for the three systems - Synthoil, H-Coal, and Exxon Donor Solvent (EDS) - includes an integrated multimedia assessment of the discharges to the environment from conceptualized 7,950 m^3 (50 kbbl) per day systems. Estimations are given for the raw waste streams, treatment and control processes, treated waste stream discharges, and the effects of these discharges on the environment.

Conclusions:

The carbon-containing residues resulting from process phase separations represent a major area for potential environmental problems. With the exception of the solid carbon-containing residues resulting from phase separation operations, established treatment and control technology exists for the removal of most major waste components such as sulfur dioxide, hydrogen sulfide, phenols, and ammonia. However, the efficiency of this technology to the control of coal liquefaction waste streams must be tested.

There has been less attention addressed to the trace organic and inorganic compounds, many of which are toxic or are suspected of adverse biological activity (carcinogenic, mutagenic, teratogenic). There is a major need for quantification of coal liquefaction environmental discharges through actual sampling and analysis of multimedia waste streams. The analysis should be centered on the determination of known toxic and hazardous chemicals.

Both process economics and environmental concern indicate the need for further work in the use and control of these wastes. A difficult environmental or health characterization area is the assessment of the effects of coal

liquefaction products and wastes on workplace personnel. This workplace assessment suffers from the dual handicap of undefined plant discharges and the lack of sufficient human health information.

CONTENTS

Abstract ii
Figures. vii
Tables xi
Acknowledgment xix
Executive Summary. xx

1. Introduction 1
2. Technology Assessments and Comparisons . . . 4
   Introduction. 4
   Present process status. 5
   Comparison of processes 9
   Evaluation of processes 16
   Treatment and control needs 19
3. The Synthoil Process 28
   Introduction. 28
   Process description 29
   Description of process modules. 38
4. The H-Coal Process 65
   Introduction. 65
   Process description 66
   Description of process modules. 75
5. The Exxon Donor Solvent Process. 108
   Introduction. 108
   Process description 109
   Description of process modules. 118
6. Common Operations and Processes. 147
   Introduction. 147
   Coal preparation. 148

Hydrogen generation process 164
Oxygen generation process 174
Steam and power generation processes . . 177
Cooling towers 180
Raw water treatment 182
Product and by-product storage 184
7. Treatment and Control Technology 186
Introduction 186
Air pollution control technology 190
Wastewater treatment and control technology 215
Environmental discharges after application of treatment and control technology 237
8. Environmental Effects After Treatment 243
Introduction 243
Coal composition and wastes 248
Quantities and composition of process and nonprocess waste discharges 257
Factors influencing environmental distribution 302
Biological cycling 321
Biological impacts 338
Estimated effects on contacted ecosystems 393

References 404
Appendices
A. SI (Metric) Conversion Factors 441
B. Sieve Series 444
C. SI Prefixes 445

FIGURES

Number		Page
1	Process alternatives for hydrogenation systems . . .	xxii
2	Overall synthoil process flow schematic	30
3	Synthoil process flow diagram - hydrogenation module	40
4	Synthoil hydrogenation module process and waste streams	42
5	Synthoil process flow diagram - gas separation module	48
6	Synthoil gas separation module process and waste streams	49
7	Synthoil process flow diagram - solids separation module	53
8	Synthoil char de-oiling process flowsheet	54
9	Synthoil solids separation module process and waste streams	56
10	Synthoil process flow diagram - acid gas removal process	61
11	Synthoil acid gas removal process and waste streams	63
12	Overall process flow schematic for a conceptual H-Coal plant operating in the fuel oil mode . .	68
13	H-Coal process flow diagram - hydrogenation module	77
14	H-Coal reactor	80
15	H-Coal hydrogenation module process and waste streams	82

FIGURES (continued)

Number		Page
16	H-Coal process flow diagram - gas separation module	85
17	H-Coal gas separation module process and waste streams	87
18	H-Coal process flow diagram - solids separation module	90
19	H-Coal solids separation module process and waste streams	92
20	H-Coal process flow diagram - fractionation module	96
21	H-Coal fractionation module process and waste streams	97
22	H-Coal process flow diagram - acid gas removal process	102
23	H-Coal acid gas removal process and waste streams	105
24	Exxon Donor Solvent coal liquefaction process schematic	110
25	EDS process flow diagram - slurry preparation and hydrogenation module	120
26	Tetralin as hydrogen donor	122
27	EDS slurry preparation & hydrogenation module process and waste streams	123
28	EDS process flow diagram - gas separation module	126
29	EDS gas separation module process and waste streams	127
30	EDS process flow diagram - solids separation module	129
31	EDS solids separation module process and waste streams	131

FIGURES (continued)

Number		Page
32	EDS process flow diagram - hydrotreating module	134
33	EDS hydrotreating module process and waste streams	136
34	EDS process flow diagram - fractionation module	138
35	EDS fractionation module process and waste streams	139
36	EDS process flow diagram - acid gas removal process	144
37	EDS acid gas removal module process and waste streams	145
38	Process schematic - coal preparation module	150
39	Synthoil process and waste streams from dry coal preparation	155
40	H-Coal process and waste streams from dry coal preparation	156
41	Exxon Donor Solvent process and waste streams from coal preparation	157
42	Hydrogen generation using Koppers-Totzek Process (K-T brochure)	167
43	Hydrogen generation module with acid gas removal process and waste streams	168
44	Oxygen generation facilities (American Air Linde, Inc.)	175
45	Steam generation with coal-fired boilers	178
46	Cooling water facilities	181
47	Raw water treatment	183
48	Two views of a typical cyclone	193
49	Commonly used filter types	194
50	Electrostatic precipitator	196

FIGURES (continued)

Number		Page
51	Venturi scrubber schematic	198
52	Surface area of a packed bed scrubber	199
53	Typical impingement scrubber design	199
54	Typical spray chambers	200
55	Benfield acid gas removal process	202
56	Selexol acid gas removal process	204
57	Claus sulfur recovery process	208
58	Stretford sulfur recovery process	210
59	Beavon tail gas cleanup process	212
60	SCOT Process	213
61	Schematic of corrugated plate interceptor oil-water separator	221
62	Flow scheme for phenol extraction - Phenosolvan Process	223
63	Two-Stage all distillation process for ammonia separation	226
64	Wastewater treatment with activated carbon	232
65	Particulate emissions from coal preparation and handling	236
66	Application of control and treatment technology to coal liquefaction process wastewaters	240
67	Effect of carbonizing temperature on composition of tar (laboratory retort; medium caking coal: 86 percent carbon)	286
68	Potential environmental interactions between a town, coal mine, and conversion plant	394
69	Plant, mine and town areas (shown in approximately correct size relationship)	395

TABLES

Number		Page
1	Gaseous Discharges from Coal Liquefaction Systems	xxiv
2	Aqueous Discharges from Coal Liquefaction Systems	xxv
3	Residue and Solid Waste Discharges from Coal Liquefaction Systems	xxvi
4	Comparison Between Petroleum Crude, Coal Tar, and Syncrude from Liquefaction	xxxi
5	Comparison of Fuels Resulting from Two Liquefaction Modes of Operation with Petroleum Crude	xxxi
6	State of Development in Coal Liquefaction	6
7	Plans for Future Efforts in Coal Liquefaction	8
8	Comparison of Coal Liquefaction Technologies by Process Modules	12
9	Coal Liquefaction Technology Process Conditions	17
10	Comparison of Coal Liquefaction Technologies by Potential Environmentally Significant Effluents	18
11	Potential Organic-Compound Pollutants	20
12	Potential Inorganic Pollutants	21
13	Potential Pollutant Sources	26
14	Control Approaches	27
15	Material Inventory - Synthoil process	33
16	Overall Material Balance-Synthoil Process	36

TABLES (continued)

Number		Page
17	Heating Value of Selected Products and Materials in the Synthoil Process	37
18	Synthoil Hydrogenation Module Process and Waste Streams	43
19	Light Oil Composition - Synthoil Process	44
20	Major Structural Types in Heavy Oil from Synthoil Process	45
21	PAH-Compounds in Synthoil Oil	45
22	Organic Sulfur Compounds in the Synthoil Products of Coal Hydrogenation	46
23	Synthoil Gas Separation Module Process and Waste Streams	50
24	Synthoil Solids Separation Module Process and Waste Streams	57
25	Analysis of Residues from Pyrolysis of Centrifuged Solids - Synthoil Process	58
26	Analysis of Aromatics in Heavy Oil Product from Pyrolysis of Centrifuged Solids Synthoil Process	58
27	Trace Elements in the Centrifuged Residues - Synthoil Process	59
28	Synthoil Acid Gas Removal Process and Waste Streams	64
29	Material Inventory for the H-Coal Process	70
30	Overall Material Balance-H-Coal Process	74
31	Heating Value of Products and Materials Utilized in the H-Coal Process	78
32	Composition by Weight Percent of a Typical Fuel Gas Utilized in the H-Coal Process	79
33	H-Coal Hydrogenation Module Process and Waxte Streams	83

TABLES (continued)

Number		Page
34	Catalyst Characteristics	84
35	H-Coal Gas Separation Module Process and Waste Streams	88
36	H-Coal Solids Separation Module Process and Waste Streams	93
37	H-Coal Fractionation Module Process and Waste Streams	99
38	Composition of H-Coal Products by Boiling Point Fractions	101
39	Overall Product Inspections of H-Coal Liquids (C_4 and Greater) Derived from Illinois No. 6 Coal	103
40	H-Coal Acid Gas Removal Process and Waste Streams	106
41	Material Inventory-Exxon Donor Solvent Process	113
42	Illinois No. 6 Coal Analysis	115
43	Overall Material Balance - EDS Process	116
44	Heating Value of Products and Materials in the EDS Process (Flow Rates from Table 41)	117
45	EDS Slurry Preparation and Hydrogenation Module Process and Waste Streams	124
46	EDS Gas Separation Module Process and Waste Streams	128
47	EDS Solids Separation Module Process and Waste Streams	132
48	EDS Hydrotreating Module Process and Waste Streams	140
49	EDS Fractionation Module Process and Waste Streams	141
50	EDS Product Analyses	142

TABLES (continued)

Number		Page
51	EDS Acid Gas Removal Process and Waste Streams	146
52	Comparison of Dry Versus Wet Coal Cleaning Processes	151
53	Comparison of the Process Requirements for Coal Preparation	154
54	Run-of-Mine (ROM) Illinois No. 6 Coal Analysis	159
55	Average Ash Analysis of Illinois No. 6 Coal	159
56	Typical Trace Element Composition of Illinois No. 6 Coal	160
57	Characteristics of Coal Pile Runoff	161
58	Fuel and Flue Gas Compositions from the Coal Preparation Module	163
59	Synthoil Hydrogen Generation Module Process and Waste Streams	169
60	H-Coal Hydrogen Generation Module Process and Waste Streams	170
61	Exxon Donor Solvent Hydrogen Generation Module Process and Waste Streams	171
62	Utilization of Liquefaction Residues	173
63	Waste Streams from H-Coal Synthoil and EDS Processes	187
64	Potential Control Technology for Air Emissions from Coal Liquefaction Processes	190
65	Characteristics of Particulate Control Systems	191
66	Operating Characteristics of Sulfur Recovery and Tail Gas Cleanup Processes	205
67	Potential Control Technology for Coal Conversion Wastewater	216
68	Acid Gases Before and After Treatment	237

TABLES (continued)

Number		Page
69	Wastewater Characterization Before and After Treatment	238
70	Commonly Determined Trace Elements in Coal (ppm)	249
71	Trace Elements in Coal That Are Not Commonly Determined (ppm)	251
72	Summary of Trace Elements in Coal	252
73	Concentration (ppm) of Elements in Various Coal-Associated Waste Products	255
74	Trace Elements in Coal Liquefaction Waste Products Which Are Not Commonly Determined (ppm)	256
75	Concentrations of Elements in Various Receivers of Effluents	258
76	Concentration (ppb) of Organic Compounds in Various Effluents and Receivers of Effluents	260
77	Leaching Characteristics of H-Coal Solid Waste	261
78	Element Concentration Ratios - Solid Waste: Feed Coal and Product Oil/Feed Coal	262
79	Concentration of Potential Organic Pollutants in the Wastewater Effluent from the Synthoil Process, Compound Concentration (ppm)	267
80	Oxidation of Various Carcinogens by Activated Sludges	268
81	Chemical Composition of Equilibrium Aqueous (1:1 Wt/Vol) Extracts from Fly Ash	269
82	Inorganic Elements in the Ash from Lurgi Gasifier and the Mineral Residue from the H-Coal Process Utilizing Illinois No. 6 Coal	272
83	Conversion Catalysts	275
84	Polynuclear Hydrocarbon Concentrations - Units A and B (Micrograms Per GJ Input)	276
85	Chemical Waste Characteristics of Coal Pile Drainage (ppm)	278

TABLES (continued)

Number		Page
86	Shawnee Pond Data	280
87	Shawnee Disposal Demonstration Input Sludge Analysis Record	280
88	Comparisons of Products and Process Parameters of Coal Liquefaction Plants and Similar Industries	282
89	Inspection of Products from Illinois No. 6 and Wyoming Subbituminous Coals	288
90	Composition of Condensable Compounds from Coal Gas	291
92	Chemical Analyses of Petroleum	293
92	H-Coal Product Composition	293
93	Major Structural Types in Heavy Oil and Asphaltene Fractions from Synthoil Product	294
94	PAH Compounds in Synthoil Samples	294
95	PAH in COED Samples	294
96	Estimation of PAH Concentrations in Coal-Derived Materials	295
97	Polynuclear Hydrocarbon Content of Particulate Matter Emitted by Incineration and Open-Burning Sources	296
98	Quantitative Data for Methyl Chrysenes in a Coal Liquefaction Product	297
99	Trace Element Composition in Various Feed Coals and Resultant Distribution After a Laboratory Liquefaction Process in an Autoclave	298
100	Estimate of Sulfur Levels in Combined Liquid and Solids Products from Liquefaction Processes.	299
101	Distribution of Sulfur in Petroleum Fractions	300
102	Organic Sulfur Compounds in Synthoil Product	301

TABLES (continued)

Number		Page
103	Boiling Points of Selected Elements Associated with Coal - °C	303
104	Leachability of Inorganic Elements from Coal Refuse and Spoil Piles	313
105	Solubility of Polynuclear Aromatic Hydrocarbons in Water	314
106	Physiochemical and Related Data for Metals	316
107	Interactions of Selected Inorganic Elements in Soils	322
108	Routes of Absorption and Excretion for Various Elements	327
109	Bioconcentration Factors for Various Elements in Various Groups of Organisms	333
110	Environmental Distribution of Specific PAH	338
111	Toxicity Potential and Potential for Bioaccumulation of Elements in Process Streams	342
112	Elements Which Exceed Recommended Water Quality Levels Utilizing a Ten Percent Solution of Lurgi Ash or H-Coal Residue (Concentrations in ppb)	344
113	Adverse Effects of Elements on Animals	346
114	Adverse Effects of Several Organic Compounds and Elements on Humans	347
115	Human Toxicity and Threshold Limit Values of Some Potential Pollutants from Coal Conversion Processes	348
116	General Toxic Effects of Elements to Plants, Animals, and Microorganisms	352
117	Standards and Acceptable Levels of Trace Elements	358
118	Reduction of Toxic Effects of One Trace Element by Another	361

TABLES (continued)

Number		Page
119	Adverse Effects for Selected Organic Compounds Potentially Emitted by Liquefaction Plants	363
120	Most Sensitive Organisms to Various Organic Chemicals	364
121	Summary of Environmental Information on Classes of Inorganic Coal Conversion Effluents	373
122	Unadjusted Ratios of Predicted to Observed LD_{50} Values of 350 Pairs of Chemicals Mixed 1:1 by Volume	374
123	Known or Suspected Carcinogens Which May Be in the Effluent Streams of Coal Liquefaction Plants	378
124	Specificity of Carcinogenic Activity	381
125	Aquatic Toxicity of PAH	385
126	Temperature Range of Carbonizing Chambers and Excess of Lung Cancer Reported	388

ACKNOWLEDGEMENTS

This report was prepared by the staff of Hittman Associates, Inc., Columbia, Maryland, under the direction of Mr. Wayne Morris, Program Manager.

For their contributions and assistance, our appreciation is extended to the following members of Hittman Associates' Technical Staff:

Vincent Di Pasquale
David Dow
John Duck
Homer Hopkins
Efim Livshits
Kathleen McKeon
Subhash Patel
John Robbins
Anthony Shemonski
Kevin Shields
Carolyn Thompson
Earl Weir

EXECUTIVE SUMMARY

The three coal liquefaction processes given environmental characterization in this report - H-Coal, Exxon Donor Solvent, and Synthoil - have similar products and wastes within the estimation accuracy allowed by available information. These products and wastes are dictated in general amount and composition by:

(1) Ash and inert residues in the feed coal

(2) Sulfur, oxygen, and nitrogen content of the feed coal

(3) Operations and auxiliary processes such as coal preparation; generation of needed hydrogen, oxygen, steam, and electricity; and by-product recovery

(4) Treatment and control technology used for waste treatment in all media

(5) Treatment and control technology in all media waste generation (e.g., sludges from biological treatment of wastewaters and wastes from sulfur dioxide removal technologies)

(6) Operating conditions for the process

(7) Treatment, use, and disposal options for residues, chars, bottoms, and other solid or high-boiling fractions.

In general, the factors above are expected to have more influence on the environmental discharges, impacts, and needed safeguards than the specific liquefaction process involved.

Figure 1 shows the general modular diagram for hydrogenation coal liquefaction systems. This diagram applies to the three systems covered in this report, and the Solvent Refined Coal System, all of which use hydrogenation technology.

For the purposes of this report, the three coal liquefaction systems have been divided into two portions:

(1) General operations and processes which may be expected to be common to all three systems

(2) Operations and processes specific to each system

The division above makes it possible to discuss specific operations and processes individually and in detail while the general operations and processes can be covered in one discussion common to all three systems.

General operations, processes, and facilities include coal preparation; heat and power generation; cooling water provision; hydrogen and oxygen generation; storage for raw materials; waste treatment and control installations; and personnel and process-related buildings, storage, and transportation facilities. Environmental discharges, with the

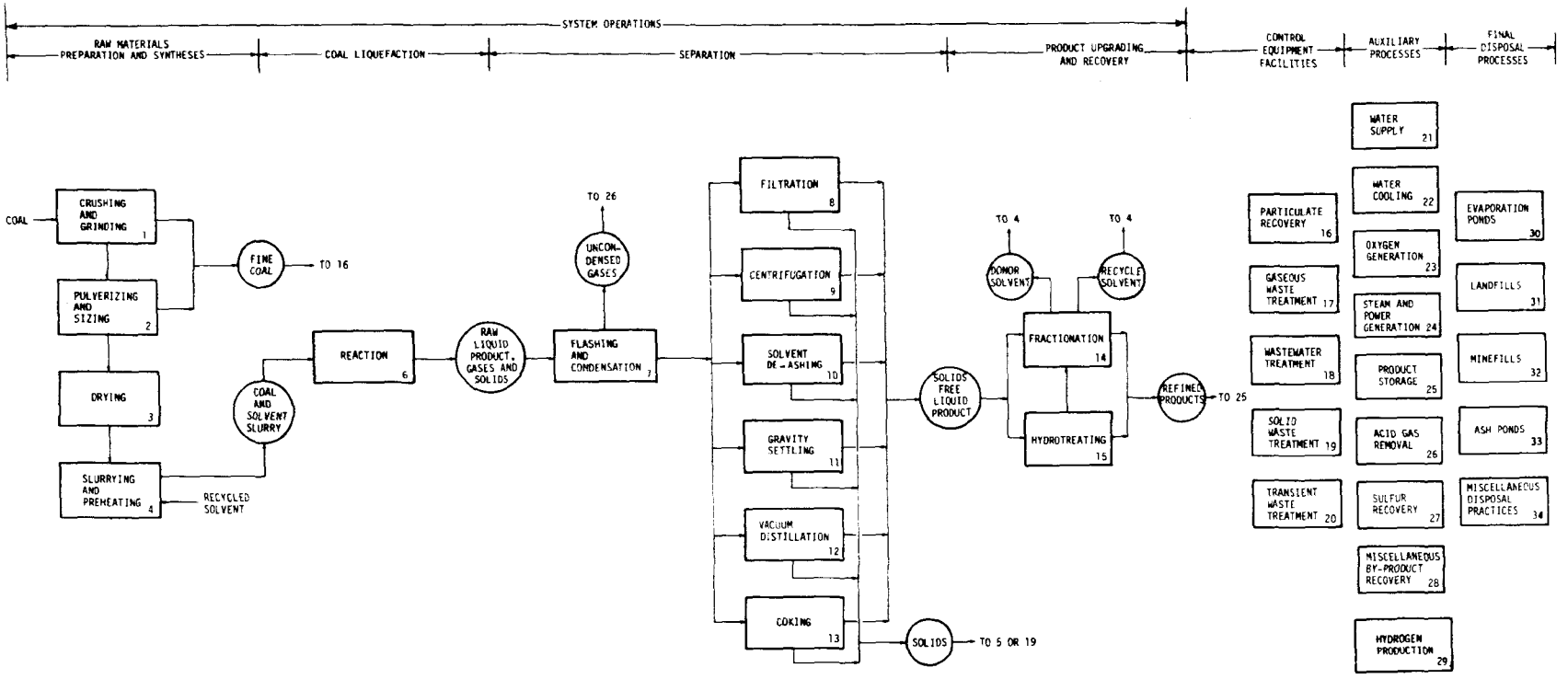

Figure 1. Process alternatives for hydrogenation systems

possible exception of hydrogen generation, can be estimated directly from similar installations in other industries.

Operations and processes specific for each system include hydrogenation, phase separations, and acid gas treatment. Other operations and processes will be present for specific system variations. The product and waste stream discharges from this portion of the system were not estimated from a similar facility, since there is none. Instead, product and waste stream discharges for this portion of the system have been estimated from information available as of September 1977 for bench-scale, PDU, and pilot plant units.

The estimated raw and treated waste discharges for 7,950 m^3 (50 kbbl) per day conceptualized systems using the three liquefaction processes covered in this report are summarized in Tables 1, 2, and 3.

Gaseous emissions from coal liquefaction processes can be estimated reasonably well for the major contaminants. Most of the major contaminants of the process gas stream such as hydrogen sulfide, ammonia, and carbon dioxide have to be largely removed as part of processing requirements. Therefore, it is estimated that these components will be reduced to low levels in the gaseous emissions, as shown in Table 1. Whether these levels are sufficiently low to avoid environmental or health problems is under study through the EPA.

Process wastewater, from sour gas scrubbing, acid condensates, and other sources for the studied processes, is estimated roughly as 3,785 m^3 (1 mgal) per day. The estimated

TABLE 1. GASEOUS DISCHARGES FROM COAL LIQUEFACTION SYSTEMS (EXTRACTED FROM SECTIONS 3,4, & 5)

For Conceptualized 7,950 m^3 (50 kbbl) per day plants

Source +*	Process											
	Synthoil				H-Coal				EDS			
	Raw wastes		After treatment**		Raw wastes		After treatment**		Raw wastes		After treatment**	
	Metric tons/day	(tons/day)	Metric tons/day	(tons/day)	Metric tons/day	(tons/day)	Metric tons/day	(tons/day)	Metric tons/day	(tons/day)	Metric tons/day	(tons/day)
Acid gas (process)												
Total	1,662	(1,832)	1,169	(1,289)	1,201	(1,325)	659	(727)	854	(941)	553	(610)
H_2S	623	(687)		2-10ppm***	680	(749)		2-10ppm***	300	(331)		2-10ppm***
NH_3	5.7	(6.3)	5.7	(6.3)	0.5	(0.6)	0.5	(0.6)	7.5	(8.3)	7.5	(8.3)
CO_2	988	(1,090)	988	(1,090)	493	(544)	493	(544)	541	(597)	540	(596)
Hydrocarbons	42	(46)	42	(46)	20	(22)	20	(22)	3.9	(4.3)	3.9	(4.3)
H_2O	2.4	(2.7)	133	(147)	8.6	(9.5)	145	(160)	N.A.		N.A.	
Acid gas (hydrogen production)												
Total	8,530	(9,404)	8,395	(9,255)	8,932	(9,847)	8,789	(9,690)	6,245	(6,885)	6,146	(6,776)
H_2S	133	(147)		2-10ppm***	140	(154)		2-10ppm***	98	(108)		2-10ppm***
NH_3	0.9	(1)	0.9	(1)	0.9	(1)	0.9	(1)	0.6	(0.7)	0.6	(0.7)
CO_2	8,346	(9,201)	8,346	(9,201)	8,738	(9,633)	8,738	(9,633)	6,110	(6,736)	6,110	(6,736)
SO_2	0.2	(0.23)	****		0.2	(0.24)	****		0.15	(0.17)	****	
HCN	2	(2.2)	trace		21	(2.3)	trace		1.5	(1.6)	trace	
N_2	48	(53)	48	(53)	50.8	(56)	50.8	(56)	35.4	(39)	35.4	(39)
NO_x	trace		trace		trace		trace		trace		trace	
Flue gas (heat & power)												
Total	N.A.		N.A.		N.A.		N.A.		N.A.		N.A.	
SO_2	376	(414)	18.7	(20.7)	N.A.		N.A.		N.A.		N.A.	
NO_x	63.6	(70.2)	N.A.		N.A.		N.A.		N.A.		N.A.	

+ Until thorough environmental sampling and analyses of all streams have been performed, these lists will not be complete.
* Emissions from coal preparation, fugitive emissions from leaks and spills, and other miscellaneous atmospheric discharges have not been quantified.
** Acid gas streams are combined before treatment.
*** Released as SO_2, after flaring.
**** Released as SO_2, after flaring; quantities not available.
N.A.- Not available.

TABLE 2. AQUEOUS DISCHARGES FROM COAL LIQUEFACTION SYSTEMS (EXTRACTED FROM SECTIONS 3, 4, & 5)

For Conceptualized 7,950 m^3 (50 kbbl) per day plants

Source+	Process											
	Synthoil				H-Coal				EDS			
	Raw wastes		After treatment**		Raw wastes		After treatment**		Raw wastes		After treatment**	
	Metric tons/day	(tons/day)	Metric tons/day	(tons/day)	Metric tons/day	(tons/day)	Metric tons/day	(tons/day)	Metric tons/day	(tons/day)	Metric tons/day	(tons/day)
Sour water (process)												
Total (including water)	3,556	(3,920)	3,411	(3,760)	4,557	(4,913)	4,154	(4,580)	1,974	(2,176)	1,776	(1,958)
H_2S	10.9	(12)		0.15ppm	175	(193)		0.15ppm		N.A.		0.15ppm
Oil												
Phenols	9	(10)		0.1 ppm	23.6	(26)		0.1 ppm	18	(20)		0.1 ppm
NH_3	125	(138)		10 ppm	103	(114)		10 ppm	180	(198)		10 ppm
Hydrogen generation**												
Clarifier overflow	235	(259)		N.A.	419	(462)	419	(462)	172	(190)		N.A.
Other wastewater	1,150	(1,268)		N.A.	1,204	(1,327)	1,204	(1,327)	841	(927)		N.A.
Cooling tower blowdown												
Total	621	(685)	621	(685)	563	(621)	563	(621)		N.A.		N.A.
Coal preparation												
Total	*	*	----	-----	*	*	-----	------	11,000**	(12,127)**		N.A.
Water	-----	------	----	-----	------	------	-----	------	7,109	(7,837)		N.A.
Tailings	-----	------	----	-----	------	------	-----	------	3,828	(4,220)		N.A.
Coal pile*** runoff	63.5	(70)	63.5	(70)	63.5	(70)	63.5	(70)	63.5	(70)	63.5	(70)

+ Until thorough environmental sampling and analyses of all streams have been performed, these lists will not be complete.

* Using dry coal preparation.

** Using water technique for extensive coal preparation.

*** Rainfall estimate (based on Illinois rainfall).

****Koppers-Totzek process described in Section 7.

N.A. - Not available

Table values are those developed in Sections 4 through 8.

TABLE 3. RESIDUE AND SOLID WASTE DISCHARGES FROM COAL LIQUEFACTION SYSTEMS (EXTRACTED FROM SECTIONS 3,4, & 5)

For Conceptualized 7,950 m^3 (50 kbbl) per day plants

Source +	Process					
	Synthoil		H-Coal		EDS	
	Metric tons/day	(tons/day)	Metric tons/day	(tons/day)	Metric tons/day	(tons/day)
Residues (process)*						
Total	206	(227)	1,444	(1,592)	2,106	(2,332)
Organic	98	(108)	722	(796)	1,445	(1,593)
Ash	108	(119)	722	(796)	661	(729)
Hydrogen generation						
Total ash sludge**	3,526	(3,887)	1,889	(2,082)	2,600	(2,866)
Process related	1,620	(1,786)	1,116	(1,230)	689	(760)
Ash from added coal	495	(546)	none		362	(399)
Water	1,411	(1,555)	773	(852)	1,548	(1,707)
Heat & power generation						
(Boiler ash)	557	(614)	none		none	
SO_2 scrubber sludge	4,744	(5,230)		use fuel gas		
Treatment/control wastes	N.A.		N.A.		N.A.	
Coal preparation						
Total	1,279***	(1,410)***	1,007***	(1,110)***	7,175****	(7,910)****
Dry refuse	1,270	(1,400)	998	(1,100)	1,451	(1,600)
Wet refuse and tailings	N.A.		N.A.		5,715	(6,300)
Dust particulates	9	(10)	9	(10)	9	(10)

+ Until thorough environmental sampling and analyses of all streams have been performed, these lists will not be complete.

* Based on excess from that needed for hydrogen generation. See Section VII for details. Does not include spent catalyst and other miscellaneous solid wastes. Specific to Sections 4, 5, and 6 coals.

** Includes ash from the process residue, ash from the make-up coal and quench water.

*** Using dry coal preparation, removal of debris only.

**** Using water techniques for extensive coal preparation. See Section 7 for rationale.

N.A. Not available.

waste load before and after treatment is given in Table 2. Some raw wastes, such as hydrogen sulfide and ammonia, present in the process gas streams may be removed by existing technology. The major unknown factor for process gas streams and emissions is the effect of volatile or particulate trace contaminants specific to coal liquefaction processes on both the composition of the discharges and the conceptualized treatment and control technology performance. The presence and amount of volatile metals; metallic compounds such as carbonyls, particulates, organics; and other possible trace contaminants in gaseous process streams and emissions have not been determined. Furthermore, the presence and amount of these trace contaminants will depend on other factors such as treatment and control technologies used, leaks and spills, and process design. The potential hazard from these emissions is a matter of grave concern.

Conceptualized treatment for process wastewater involves oil separation, phenols extraction, and ammonia stripping to remove these components and is followed by biological treatment and carbon adsorption. The technology most often used for removing soluble organics from wastewater is biological treatment. This technology biodegrades some of the organics but others go through the system unchanged. Carbon adsorption or another treatment technology may be needed to remove these residual organics.

The oils, phenols, ammonia and biodegradable portions of the process wastewater streams may be expected to be removed to the approximate levels given in Table 2. The refractory and trace pollutants that will go through the conceptualized liquid treatment system, or require use of other or additional treatment technology, still need to be

defined. Based on very limited information and rough approximations discussed in Section 7, both refractory organics and inorganic trace elements remaining after treatment may be below current or projected regulatory limits for these materials. However, this is not meant to dismiss any concern regarding potential hazards. Exact status needs to be determined by sampling and physical, chemical, and biological evaluations.

Cooling tower blowdown from the 7,950 m^3 (50 kbbl) per day conceptualized processes is roughly estimated at 568 m^3 (150,000 gal) per day. In addition to the chemicals added for corrosion and biological growth control, leaks and other sources of contamination by the process streams are possible. Conventional treatment technologies used at coal-fired steam electric plants or other such facilities (e.g., refineries) should be applicable to handling blowdown if process contamination is not too severe. Here again there is concern for the potential hazards, and their extent should be determined. Significant wastewater, approximately 1,514 m^3 (400 kbbl) per day, is also generated in the hydrogen generation module. Table 2 summarizes these waterborne wastes and the major pollutants involved.

Flue gas from power generation is the major nonproduct discharge from coal liquefaction systems. According to the aforementioned SPM (EPA 600/7-78-091), an 18,200 metric ton (20,000 tons) per day SRC plant has an estimated flue gas output of 12,000 metric tons (13,150 tons) per day. Residues and solid waste constitute additional nonproduct discharges from the system. The amounts of carbon-containing components in the solid wastes and residues depend on the conceptualized processes employed. For a 7,950 m^3 (50 kbbl) per day system, all three liquefaction processes of this report have approximately 4,536 metric tons (5,000 tons)

per day of residue containing a mixture of high-boiling organics and inorganic materials. To date, no one has reported actually using this residue for any purpose. The most prevalent concept is to pyrolyze the residue to remove additional liquid product, leaving a carbon-containing mixture of char and inorganic inerts. The carbon-containing mixture is then used as fuel in the hydrogen generation module. The nature of these discharges has a significant impact on the expected environmental effects. Using the ash as an example, if the organic component of the residues from the phase separation operation has been removed by subsequent combustion in a furnace or gasifier, the remaining ash may be expected to be similar to that for coal-burning furnaces, and the problems of ash disposal would be expected to be similar. If significant organic material remains in the waste, then it must be considered potentially hazardous to human health, and extra disposal precautions would have to be taken. This might involve incineration, secure landfilling, or other applicable technology.

Treatment of liquefaction process carbon-containing solid wastes and residues presents a process development challenge that appears to need additional attention. Significant improvements of product yields may be possible through pyrolysis or other technologies. Combustion of the solid waste to generate hydrogen, steam, fuel gas, or other products is a possibility. Presently, however, this solid waste must be considered as potentially hazardous to human health.

In addition to the carbon-containing solid wastes and residues resulting from phase separation and hydrogen generation operations and processes, large quantities of sludges (see Table 3) may also be generated by sulfur dioxide treatment and control processes. Sludge will also be

generated from physical and biological wastewater treatment processes.

Coal liquefaction products themselves are a source of significant concern. Table 4 shows a comparison of petroleum, coal tar, and liquefied coal products. Coal tar and coal liquefaction products contain 85 and 73 weight percent aromatic and cyclic hydrocarbons, respectively, while petroleum has only 35 weight percent. The remaining 65 percent of petroleum is aliphatic hydrocarbons. The aromatic hydrocarbon content, which is significantly higher in coal tar and liquefied coal products than in petroleum, is the source of the most biologically active (carcinogenic, mutagenic, teratogenic) compounds. Therefore, leaks, spills, handling, transportation, storage, and use of products may well require attention similar to coal tar chemicals and other known biologically active substances.

For some compounds, coal tar is not a good model. The reported benzo(a)pyrene (a known carcinogenic material) level in syncrude, is closer to that in petroleum than in coal tar. There is a definite need for independent analytical data on the level of known toxic substances in coal liquefaction products.

Liquefaction products vary with the envisioned end use. For example, SRC products are primarily intended as fuel for plants generating electricity. As such, the main emphasis has been on removal of sulfur and any other feed coal components that would cause problems in meeting current regulations. Operating in the SRC-I mode, solids product is made. More stringent hydrogenation and molecular breakdown of the feed coal can be achieved, however, to give liquid fuels (SRC-II mode). Like the SRC process, the three processes of this report may be modified to give a range of

TABLE 4. COMPARISON BETWEEN PETROLEUM CRUDE, COAL TAR, AND SYNCRUDE FROM LIQUEFACTION

Category	Liquefaction syncrude (1,2) (approx. wt %)	Petroleum crude (3,4,5,6) (approx. wt %)	Coal tar (5,7,8,9) (approx. wt %)
Nonaromatic	25	65	7
Aromatic (other than below)	33	35	85
PAH* and hetrocyclics	40		
Phenols	2	----	1-5.0
Sulfur	0.5	0.5	1.0
Nitrogen	0.2	1.0	1.2
Benzo(a)pyrene	0.005	0.003	0.2-2.0

*PAH = polynuclear aromatic hydrocarbons

TABLE 5. COMPARISON OF FUELS RESULTING FROM TWO LIQUEFACTION MODES OF OPERATION WITH PETROLEUM CRUDE (WT PERCENT OF MAF* COAL)

	Illinois coal		
Normalized product distribution	Low-sulfur fuel oil (1)	Synthetic crude (1)	Petroleum crude (6,10)
C_1-C_3 hydrocarbons	6	12	1
C_4-400°F distillate	14	19	20
400-650°F distillate	22	31	30
650-975°F distillate	20	21	35
975°F + residual oil	34	11	14
Unreacted ash-free coal	8	6	--

*Moisture and ash-free basis.

different products. Table 5 compares the compositions of H-Coal process products for two modes of operation to that of petroleum crude. At relatively mild hydrogenation conditions, the H-Coal process low-sulfur fuel oil of Table 5 has 42 weight percent of unreacted coal and bottoms residue. At more severe hydrogenation conditions, the H-Coal process synthetic crude (Table 5) has only 17 weight percent unreacted coal and bottoms residue and is beginning to resemble petroleum crude in its product boiling point distribution. Therefore, it is necessary to know the involved processing mode before environmental discharges can be determined. Oftentimes the mode and conditions of process operation for the process will have more influence on the environmental discharges than the selection of liquefaction process itself.

In line with earlier discussion on available technology to remove or control wastes such as hydrogen sulfide, sulfur dioxide, ammonia, and phenols, the most critical concerns over environmental potential effects are with the lesser-volume waste and product components such as trace elements and biologically active organics. This is partially true because while some attention is being addressed to the high-volume pollutants, neither the presence nor the effects of these lesser-volume substances can be quantified at this time. Section 8, however, is devoted to a detailed discussion of current knowledge regarding their possible presence, known behavior, and potential for environmental impact. On the basis of very limited information, it appears that the environmental effects of discharges from coal liquefaction complexes will lie between those from petroleum refineries and those from coal tar facilities.

A difficult environmental or health characterization area is the assessment of the effects of coal liquefaction

products and wastes on workplace personnel. Since some environmental discharges will also be potential problems of workers, coordination of programs by various groups is important. This workplace assessment suffers from the dual handicap of undefined plant discharges and the lack of sufficient human health data to predict their effects even in the instances where some definition is possible. Section 8 represents an attempt at partial definition of the expected environmental effects resulting from a conceptualized commercial coal liquefaction facility. Overall assessment indicates that extensive attention will need to be given to minimizing leaks, spills, and other fugitive emissions which can affect the worker and the environment.

To supplement this environmental or health characterization study, it is recommended that the following investigative priority be established:

(1) Quantify process wastewater streams and their composition, using the control assay procedure approach of IERL/RTP methodologies. Laboratory experiments should first be run on samples of these streams for such simple tests as oil separation, suspended solids removal, soluble organics, phenol extraction, and carbon adsorption. Analysis should then be made for the oil, water, and solid phase compositions, particularly for trace elements and biologically active organics.

(2) Similarly quantify gas stream compositions both before and after treatment. Special attention should be given primarily to trace components while also obtaining data on major constituents such as hydrogen sulfide, ammonia, and carbon dioxide.

(3) Determine product, solid waste, and residue compositions. Analysis should be primarily aimed at known toxic and hazardous chemicals using the MEGs list (11).

(4) Assemble all known information, plus the results of (1), (2), and (3) above, to form a data base and model for determining plant discharges to the environment.

(5) Supplement information present in MEGs with other known information on the toxicological properties of identified product and waste constituents (11).

(6) Perform environmental assessment of coal liquefaction processes, based on information collected in (1) through (5) above.

SECTION 1

INTRODUCTION

The purpose of this report is to establish a technical base that is expert in the environmental aspects of the coal liquefaction technology. The report describes the necessary technical process information and emphasizes the environmental considerations. It includes flow diagrams, equipment descriptions, and input and output of operations for all streams including intermittent discharges, by-products, and emissions. It also includes product yields, energy efficiencies, material inventories, and balances.

On the basis of preliminary prioritization studies (see pg. 4), four coal liquefaction processes have been selected for detailed environmental study in subsequent phases of the contract. These four processes are Solvent Refined Coal (SRC), H-Coal, Synthoil, and Exxon Donor Solvent (EDS). Since initiating this study, events have occurred which indicate Synthoil may not be developed to a larger scale; however, since work was already completed on this process, the information is presented here.

The Solvent Refined Coal process is being covered in a separate report (SRC Standards of Practice Manual). The other three processes are covered in this environmental characterization report. Coverage includes process and material balance descriptions for each; definition of products

and wastes, auxiliary processes such as coal preparation, and treatment and control technology; environmental effects of process effluents; and technology assessments and comparisons.

Environmental characterization of product and waste discharges from coal liquefaction facilities can only be estimated at this time. Since there is no commercial-sized installation, expected discharges for such installations must be extrapolated from bench-scale equipment, process development unit, and pilot plant findings. In addition to being subject to scale-up extrapolations, discharge estimates are also hampered because most available data centers on the process modules that are essential to coal liquefaction and product recovery and not on waste treatment, control, or utilization. In most cases, these waste-related modules have neither been defined nor incorporated in PDU and pilot plant facilities. Another factor hampering accurate estimates of process discharges is the virtual absence of information on the quantitative composition of the product and waste streams as related to environmental effects. There is a lack of performance data from operating facilities.

In the context of the above restrictions, this report provides documentation and evaluation of existing data prior to more exhaustive subsequent studies in environmental assessment reports (EARs) and standards of practice manuals (SPMs).

The basis used to estimate and quantify product and waste discharges was to conceptualize 7,950 m^3 (50 kbbl) per day commercial installations for the H-Coal, EDS, and Synthoil coal liquefaction processes and discuss their environmental

effects. The data input was that available as of September 1977. With the rapidly evolving data base and technology development expected from coal liquefaction operations during the next 1 to 2 years, it is anticipated that periodic updating and expansion of this environmental characterization report will be needed.

It is also anticipated that coal liquefaction plants will be integrated industrial complexes similar to present petroleum refineries and petrochemical installations. In addition to the basic coal liquefaction process itself, other large operations and processes such as coal cleaning and preparation, hydrogen and fuel gas generation, heat and power generation, oxygen generation, waste recovery, treatment and control installations, fractionations, chemical production, and storage and handling facilities will be included. It is hoped that this report will show the areas of potential environmental discharge problems and the challenges and opportunities for their solution.

SECTION 2

TECHNOLOGY ASSESSMENTS AND COMPARISONS

INTRODUCTION

A data base from existing literature has been established for prioritization and environmental characterization of systems in the technology of coal liquefaction. Few original sources were found where environmental factors were addressed, especially in the areas of waste treatment and control installations. For any continuation of the assessments and comparisons, it thus becomes necessary to conceptualize major portions of processes. Some similarity of wastes and discharge streams has therefore been imposed because of the meager existing data. This report provides an evaluation of the more prominent schemes for coal liquefaction, with greater emphasis on the Synthoil, H-Coal, and Exxon Donor Solvent processes.

Because limited resources preclude the environmental evaluation of all the processes identified in the literature, four were selected as the best possibilities for evaluation. They include the Solvent Refined Coal (SRC) Process in addition to the three named above. The SRC process evaluation is contained in a Standards of Practice Manual. Criteria used for the selection of the four processes include some sixteen factors ranging from the stage of development to the hazard potential of residual emissions.

Since work began on this study, the schedule for development of the Synthoil Process has been interrupted and development may not be resumed. However, because the material was already assembled and because the Synthoil Process is representative of the several processes in its category, the information is included in this report.

PRESENT PROCESS STATUS

State of Development

Overall Status--

Table 6 provides information regarding the current status of coal liquefaction processes. Development of most of these is partially sponsored by the United States Department of Energy (DOE). The only pilot plants now in operation are the SRC units, one at Ft. Lewis, Washington, and the other at Wilsonville, Alabama. There are no demonstration plants now in operation. The only commercial coal liquefaction plant currently operational is in the Sasol Fischer-Tropsch complex in South Africa.

Processes Selected for Study--

Bench-scale operations have been performed for the Synthoil process. Analyses of product and waste products have been made. A PDU designed for the Synthoil process is nearing completion, but technology other than Synthoil will be utilized for its operation.

For the H-Coal process, operations have been conducted in bench-scale and PDUs. A 544-metric ton per day pilot plant is under construction at Catlettsburg, Kentucky (12).

TABLE 6. STATE OF DEVELOPMENT IN COAL LIQUEFACTION

Status	Specific process							
	Synthoil (12)	H-Coal (12)	EDS (12)	SRC (12)	Bergius (12)	Costeam (14)	COED (14)	Conoco/DOE $ZnCl_2$ (12)
Demonstrated scale*	0.45	2.7	0.9	45	2040	Lab	33	Lab
Development plan*	Continued evaluation on bench scale	544	227	Evaluation of SRC-II	Completed	Evaluation	Completed	PDU
Availability	?	1978	1981	1980	Now	?	Now	1980
Applicability	(i.)(g.)(h.)	(i.)(g.)(h.)	(i.)(h.)	(i.)(g.)	(l.)(j.)(k.)	(g.)	(i.)(l.)	(l.)
Waste treatment/ control demonstration	No	No	No	Yes	Unknown	No	No	No
Commercial status	No	No	No	No	Yes	No	No	No
Type of process	(a.)	(a.)	(e.)	(b.)	(a.)	(b.)	(c.)	(a.)

Status	Clean Coke (12)	Toscoal (15)	Occidental Research Corporation (ORC) (12)	Fischer-Tropsch (13)	Supercritical Gas Extraction (SGE) (16)	Methanol Synthesis
Demonstrated scale*	0.45	22.5	3.2	6000	Lab	Completed
Development plan*	?	?	225	Completed	Evaluation	Completed
Availability	?	?	?	Now	?	Now
Applicability	(g.)(k.)	(i.)(h.)	(i.)	(k.)(g.)(h.)(i.)(j.)	(k.)(i.)(j.)	(l.)(j.)(k.)
Waste treatment/ control demonstration	No	No	No	Yes	No	?
Commercial status	No	No	No	Yes	No	Yes
Type of process	(c.)	(c.)	(c.)	(d.)	(f.)	(d.)

(a.) Catalytic liquid phase hydrogenation
(b.) Noncatalytic liquid phase hydrogenation
(c.) Pyrolysis & hydrocarbonization
(d.) Catalytic synthesis
(e.) Donor Solvent
(f.) Extraction
(g.) Electric utility fuel production
(h.) Industrial fuel production
(i.) Synthetic crude production
(j.) Domestic fuel production
(k.) Industrial chemical production
(l.) Transportation fuel production

* Nominal capacity in metric tons per day

Studies of process variables have been made for the Exxon Donor Solvent system during operation of a PDU (12). Little has been published on this proprietary technology.

The SRC pilot plants are in operation, and the Ft. Lewis facility provided fuel for a combustion test in June 1977 in a conventional steam generation boiler.

Plans For Future Effort

Overall Plans--

Table 7 provides information regarding future plans for coal liquefaction development projects.

Funding for the four processes selected for study currently totals $258 million, which far outweighs any other identified coal liquefaction expenditure. These are accumulated costs plus the costs expected to complete projected plans through 1980 (12).

The next pilot plant expected to become operational is the H-Coal installation scheduled for FY 1978. The next operational pilot plant after that will probably be the Exxon Donor Solvent installation planned for operation in FY 1980 (12).

Sasol-II, a large commercial Fischer-Tropsch Process plant in South Africa, is scheduled to begin operation in 1980 (17).

Plans For The Selected Processes--

For the Synthoil process, bench-scale operations are continuing; however, the 9.1-metric ton per day PDU now nearing completion will definitely not be used for the

TABLE 7. PLANS FOR FUTURE EFFORTS IN COAL LIQUEFACTION

Status	Specific process							
	Synthoil (12)	H-Coal (12)	EDS (12)	Bergius (12)	SRC-II (12)	Gastech (14)	COED (14)	Conoco/DOE $ZnCl_2$ (12)
Funding sources:								
Government	100%	4/5	1/2		100%			7/8
Industry	----	1/5	1/2	----	----	----	----	1/8
Present funding								
$ x 10^6	27.9	179	12.7	0	62.1	?	0	6.4
Type of process:								
Proprietary	----	----			----	----	-----	-----
Govt. funded	----	----	-----	----				
Scale-up underway	No	Pilot plant under construction	No	No	No	?	No	PDU under construction
Scale-up planned	No	No	Design pilot plant	No	No	?	No	No
Operational status:								
Active	Active	Active	Active		Active	Active		Active
Inactive				Inactive			Inactive	
Future plants	Lab studies	Pilot plant operation	Pilot plant operation	None	Pilot plant operation thru FY80	None	None	PDU operation thru FY80

Status	Clean coke (12)	Toscoal (12)	ORC (12)	Fischer-Tropsch (17)	Methanol Synthesis	Supercritical Gas Extraction (16)
Funding sources:						
Government	7/10	----	100%	The South African Coal, Oil & Gas Corp. Ltd. (SASOL)	None	National Coal Board (GB)
Industry	3/10					Catalytic, Inc.
Present funding						
$ x 10^6	11.8	Unknown	3.8	1.5 billion +	Unknown	Unknown
Type of process:						
Proprietary						
Govt. funded	----	----	-----	-----	----	British Govt.
Scale-up planned	No	No	No	Yes	No	No
Scale-up underway	No	No	No	Yes	No	No
Operational status						
Active	Active		Active	Active		
Inactive		Inactive			Inactive	Inactive
Future plans	Development studies	None	Development studies	A new 14-million ton/yr plant	None	Unknown

Synthoil process (personal communication from DOE). At this time, it appears that no future scale-up or pilot plant activity will be forthcoming.

Operation of the 544-metric ton per day H-Coal pilot plant is scheduled for the period FY 78 through 1980 (12).

A 227-metric ton per day Exxon Donor Solvent process pilot plant is planned for construction at Baytown, Texas (12). Operation is scheduled for FY 80 to 82.

The SRC pilot plant is scheduled for operation through FY 80 (12).

The H-Coal, SRC, and EDS pilot plants should offer the best sources for environmental assessment of coal liquefaction plant discharges within the next 2 to 3 years.

COMPARISON OF PROCESSES

Overall Modular Analysis

Types of Processes--

All liquefaction processes achieve the objective of producing liquids by yielding a material having a higher hydrogen content than coal. Hydrogen is present in coal at a level of about 5 percent. In high-Btu gas it is roughly 25 percent. Fuel oils contain 9 to 11 percent hydrogen and gasoline contains about 14 percent.

In general, liquefaction processes offer several advantages over gasification of coal. Overall thermal efficiency is usually higher, and, as indicated above, hydrogen requirements on a weight percent basis are much

lower than in gasification. Liquid fuels have much higher mass and energy densities than fuel gases. These advantages should cause more rapid development and commercialization of new liquefaction rather than new gasification processes.

Currently, approximately 20 coal liquefaction processes are in various stages of development by industry and federal agencies. The major categories of coal liquefaction technology can be identified as follows:

- Hydrogenation, Category 1
- Pyrolysis and Hydrocarbonization, Category 2
- Catalytic Synthesis, Category 3
- Donor Solvent, Category 4
- Extraction, Category 5

Each of these categories includes several processes.

In Category 1, the crude liquid from the initial reaction is suitable for utility fuel after desulfurization and may be used where production costs and environmental concerns, rather than specific fuel requirements, have priority. Upgrading by hydrotreating (further hydrogenation) is required to produce higher quality fuels. Synthoil and H-Coal are catalytic hydrogenation processes wherein the hydrogen is introduced directly to the liquefaction zone in the presence of the catalyst. SRC is also a direct hydrogenation process but no catalyst is added (although constituents in the coal may act as a catalyst). The donor solvent processes are so called because a major part of the hydrogen is supplied to the liquefaction zone via the

solvent material, which gives up its hydrogen for use in the liquefaction process.

Pyrolysis and hydrocarbonization processes, Category 2, also yield a crude liquid which requires hydrotreating. Such treatment also reduces sulfur, nitrogen, and oxygen.

Varying amounts of carbon remain unreacted as a char, depending upon the process. In some processes, the char is separated from the product and used to generate hydrogen via the steam-carbon reaction. Other processes produce such a high proportion of char that it must be considered by-product fuel. Synthesis gas is used in place of hydrogen in several processes. Synthesis gas is a mixture of hydrogen and carbon monoxide in varying proportions and can be generated via the reaction of carbon with oxygen and steam. Carbon for this purpose may be obtained from fresh coal feed, from carbonaceous residues produced by the process itself, or a combination of the two. Synthesis gas is used in catalytic synthesis processes, Category 3, to produce liquid fuels and chemicals without additional input of coal. Category 4 processes use a hydrogenated solvent which "donates" hydrogen to the liquefaction reaction in donor solvent processes. Category 5 processes remove fuel liquids from the coal via extractants.

Process Modules--

Table 8 compares coal liquefaction technologies in terms of ten common process operations and processes. Four of the ten processes or modules are used in all of the fifteen processes listed. These four are: coal preparation, separation, gas cleaning, and auxiliaries. Twelve of the fifteen processes use the hydrogen/synthesis gas generation module. Hydrogenation is used in ten processes, fractionation is used in nine, pyrolysis in five, catalytic synthesis

TABLE 8. COMPARISON OF COAL LIQUEFACTION TECHNOLOGIES BY PROCESS MODULES (18)

Specific Process	Module or process										
	Coal preparation	Hydrogenation	Pyrolysis/ hydrocarbonization	Hydrotreating	Catalytic synthesis	Phase separation	Fractionation	Gas cleaning	Hydrogen/synthesis gas generation	Auxiliaries	Similarities to other processes*
Synthoil	+	+	-	-	+	+	-	+	+	+	7
H-Coal	+	+	-	-	+	+	-	+	+	+	7
Bergius	+	+	-	-	+	+	+	+	+	+	8
SRC-I	+	+	-	-	-	+	-	+	+	+	6
SRC-II	+	+	-	-	-	+	+	+	+	+	7
COSTEAM	+	+	-	-	-	+	-	+	+	+	6
COED	+	-	+	+	-	+	+	+	+	+	8
SGE	+	-	-	+	-	+	+	+	-	+	6
Coalcon	+	-	+	-	-	+	+	+	+	+	7
Clean Coke	+	+	+	+	-	+	+	+	+	+	9
TOSCOAL	+	-	+	-	-	+	-	+	-	+	5
ORC	+	-	+	+	-	+	-	+	-	+	6
F-T Synthesis	+	+	-	-	+	+	+	+	+	+	8
Donor Solvent	+	+	-	+	-	+	+	+	+	+	8
Methanol Synthesis	+	+	-	-	+	+	+	+	+	+	8
	15	10	5	5	5	15	9	15	12	15	106

(+) - indicates module or process is in the system
(-) - indicates module or process is not in the system
* - for discussion see text, page 11.

in five, and hydrotreating in at least five. The combination of ten modules and fifteen processes provides for 150 possible similarities. Actual similarities amount to 106.

Comparison of the Selected Processes

Solvent Refined Coal Process--

This process, noncatalytic hydrogenation, was initially designed with the objective of producing a low-sulfur solid fuel suitable for use in coal-fired electric generating plants. The sulfur content is reduced during hydroliquefaction so that burning of the product in conventional utility boilers emits less sulfur dioxide. It was hoped that this would eliminate the necessity for flue gas scrubbing to remove sulfur dioxide. As evidenced by its solidification after cooling, the molecular structure of the coal is affected less in the SRC-I process than in any of the other selected technologies. The SRC-I process also is conceptually the most simple. Coal is dissolved, the sulfur and other undesirable components are extracted, and the modified coal is recovered in solid form. This concept uses mild hydrogenation conditions, and, since the final product is solid SRC, fractionation is not required to obtain different products. Usable products are recovered by phase separations.

More recently, however, the SRC process has been operated in a modified mode identified as SRC-II. It produces liquid fuel. This requires more stringent modification of the coal molecules and brings the process into closer comparison with the other three priority processes which also produce liquid fuel.

The SRC process is the only selected process developed through the pilot plant stage. The pilot plant includes waste treatment and control facilities. Therefore, at this

time, it offers the best source for assessment of the discharges of a coal liquefaction process to the environment.

Materials issuing from this process include products which can be either solid or liquid fuel or both, ash and mineral matter, hydrocarbon gases, waste liquids (oil and water), spent catalyst, sulfur, ammonia, coal dust, tar, blowdown, and sludges from auxiliary operations.

Synthoil Process--

From its conception the Synthoil process, a catalytic hydrogenation, was designed to produce liquid fuel. A fair amount of information is available for this process and the wastes and products formed (9). The major problem with conducting an environmental assessment of this process is that only relatively small-scale equipment has been used and except for the heart of the process (hydrogenation units, phase separators, etc.), little work has been performed. Treatment and control modules, auxiliary processes, and other nonproduct-oriented process portions as presented in this report are concepts only. Since the PDU will not use Synthoil technology, inclusion of this technology as a selected process may need future reevaluation.

Materials issuing from the coal by this method of processing include sulfur, ammonia, ash, carbonaceous residue, coal dust, tar, waste liquids (oil and water), spent catalyst, blowdown, and sludges from auxiliary operations.

H-Coal Process--

The H-Coal process, catalytic hydrogenation, also produces liquid fuel. More data and information for this process and the wastes and products formed should be avail-

able within the next two years when the pilot plant begins operation. It will have waste treatment facilities.

It is anticipated that materials issuing from the processing of coal by the H-Coal system will include crude oils, residues, ash, sulfur, ammonia, spent catalyst, waste liquids (oil and water), coal dust, tar, blowdown, and sludges from auxiliary operations.

Exxon Donor Solvent Process--

This process differs from the other three in that it uses hydrogen transferred from the solvent to the coal as a major source of hydrogen for liquefaction of the coal. The donor solvent is hydrogenated catalytically and then stripped of hydrogen in the liquefaction reactor in cyclic fashion. Whenever possible, the Exxon Donor Solvent process uses technology developed in the petroleum industry. There is little information available, however, on the details of the process, products, or wastes.

This process is expected to produce crude oil, hydrocarbon gas, naphtha, sulfur, residue, ammonia, coal dust, tar, spent catalyst, spent solvent, waste liquids (oil and water), blowdown, and sludges from auxiliary processes.

Emissions Treatment and Control Technology

As expressed in the introductory statements of this section, the current literature data base compiled for this study shows a lack of useful information on the environmental aspects of coal liquefaction. Information required for the identification of more than general areas of treatment and control technology is nonexistent. Problems associated with the development of the process aspects of

liquefaction have apparently been sufficient to occupy the full attention of those engaged in this field.

EVALUATION OF PROCESSES

Similarities and Differences

Table 9 provides additional detailed information for comparison on the basis of process conditions within the main process module. The reactor temperatures for two of the four processes, Synthoil and SRC, are in the 450°C to 480°C range, while the other two, H-Coal and Exxon Donor Solvent, are somewhat lower, in the 370°C and 380°C range. Comparing reactor pressures, three processes have pressures in the 10 to 20 MPa range while the Synthoil process is somewhat higher at 29 MPa. Since reaction products are controlled by operating conditions such as temperature, pressure, residence time, and free radical concentrations, it is interesting to note the similarities of at least two of the pertinent variables. Residence time and hydrogen-to-coal ratios would also be valuable for estimating product compositions where analytical data are not available, but these have not been included, usually because of a lack of readily available information necessary for their calculation. More detailed studies on product and waste composition as a function of operating variables should include these parameters.

Pollution Potential

A great many organic and inorganic categories and classes of substances may be contained in the output streams listed in Table 10 and in the generalized listings of

TABLE 9. COAL LIQUEFACTION TECHNOLOGY PROCESS CONDITIONS (18)

Specific process	Reactor temperature °C	Reactor pressure MPa	Phase
Synthoil	450	29	L,S,G*
H-Coal	370	20	L,S,G
Bergius	430	69	L,S,G
SRC-I	480	10	L,S,G
SRC-II	457	20	L,S,G
COSTEAM	400	28	L,G
COED	870	0.06	S,G
Coalcon	560	4	L,S,G
TOSCOAL	540	0.1	L,S,G
Occidental Research Corp.	500	14	L,S,G
Fischer-Tropsch	340	2.9	L,G
Exxon Donor Solvent	380	18	L,S,G
Supercritical Gas Extraction	400	10	S,G
Methanol Synthesis	425	31	L,G

*L = liquid, S = solid and G = gaseous

products, by-products, and wastes in Sections 4 through 6. These substances are either known or suspected as emissions from coal or oil processing. Currently the list consists of (12):

	Categories	Classes	Substances
Organics	26	45	350
Inorganics	59	--	300
	85	45	650

TABLE 10. COMPARISON OF COAL LIQUEFACTION TECHNOLOGIES BY POTENTIAL ENVIRONMENTALLY SIGNIFICANT EFFLUENTS* (18)

Effluent	Specific Process												
	Synthoil	H-Coal	Bergius	SRC	COSTEAM	COED	COALCON	Clean Coke	TOSCOAL	OCR	Fischer-Tropsch	Donor Solvent	Methanol Synthesis
Ammonia	+	+	+	+		+	+	+		+		+	+
Synthetic oil	+	+	+	+	+	+	+	+	+	+	+	+	+
Methanol											+		+
Sulfur	+	+	+	+	+	+	+	+	+	+	+		
Ash	+	+		+		+	+	+	+		+		
Carbonaceous residue	+	+	+	+	+	+		+	+	+		+	
Hydrocarbon gases	+	+	+	+	+	+	+	+	+	+	+	+	+
Tar	+	+	+	+	+	+				+	+	+	+
Spent catalyst	+	+	+	+		+	+				+	+	+
Spent MEA	+											+	
Waste liquids, oil & water	+	+	+	+	+	+	+	+	+	+	+	+	+
Blowdown & sludge from:													
• power plant	+	+	+	+	+	+	+	+	+	+	+	+	+
• water treatment	+	+	+	+	+	+	+	+	+	+	+	+	+
• cooling tower	+	+	+	+	+	+	+	+	+	+	+	+	+
Spent solvent		+				+						+	
Dust from coal	+	+	+	+	+	+	+	+	+	+	+	+	+
Tar acids								+		+			+
Organic chemicals								+			+		
Gasoline								+			+		
Flue gas									+	+	+		
Naphtha											+	+	
Totals	14	14	12	13	10	14	11	15	11	13	16	15	13

*Only those output streams common to two or more of the specific processes are listed.

Table 11 lists the organic categories and Table 12 lists the inorganic categories. The hazard potential of approximately 216 specific materials has been addressed (20). Of this number, 140 are relatively nonhazardous, 37 are hazardous, 24 are very hazardous, and 15 are most hazardous to human health.

In liquefaction the various constituents in the coal feed could form potential pollutants. With such an array of possibilities, it becomes very important to determine the fates of known hazardous materials. Such materials as sulfur, oxygen, nitrogen compounds, and other minor or trace elements may be converted to materials that are soluble in the oil or water, may remain with the gas, may be deposited on the catalyst, or may remain associated with the ash, residue or mineral matter. Compounds such as arsine, HF, and similar materials may be formed. Much of the nitrogen in the coal may appear as ammonia which can be removed by scrubbing with water, but amines may also form and appear in the water layer. Phenolic and other oxygenated compounds will probably be present.

TREATMENT AND CONTROL NEEDS

Solids Disposal

More work is needed to define methods of disposal that do not create problems due to leaching of acids, organics, metals, or sulfur. Leachates could contaminate natural water. Existing information and technologies on ash and sludges from boiler, power plant, and other conventional combustion facilities will be useful for this purpose.

TABLE 11. POTENTIAL ORGANIC-COMPOUND POLLUTANTS (21)

Category	Class
1 - Aliphatic hydrocarbons	Alkanes and cyclic alkanes
	Alkenes, cyclic alkenes, and dienes
	Alkynes
2 - Alkyl halides	Saturated alkyl halides
	Unsaturated alkyl halides
3 - Ethers	Ethers
4 - Halogenated ethers	Halogenated ethers
5 - Alcohols	Primary alcohols
	Secondary alcohols
	Tertiary alcohols
6 - Glycols, epoxides	Glycols
	Epoxides
7 - Aldehydes, ketones	Aldehydes, ketones
8 - Carboxylic acids & derivatives	Carboxylic acids with additional function groups
	Amides
	Esters
9 - Nitriles	Nitriles
10 - Amines	Primary amines
	Secondary amines
	Tertiary amines
11 - Azo compounds, hydrazine, & deriv.	Azo compounds, hydrazine, & deriv.
12 - Nitrosamines	Nitrosamines
13 - Mercaptans, sulfides & disulfides	Mercaptans
	Sulfides, disulfides
14 - Sulfonic acids, sulfoxides	Sulfonic acids
	Sulfoxides
15 - Benzene, substituted benzene hydrocarbons	Benzene, substituted benzene hydrocarbons
16 - Halogenated aromatic hydrocarbons	Halogenated aromatic hydrocarbons
17 - Aromatic nitro compounds	Aromatic nitro compounds
18 - Phenols	Monohydrics
	Dihydrics, polyhydrics
	Hydroxy compounds with fused rings
19 - Halophenols	Halophenols
20 - Nitrophenols	Nitrophenols
21 - Fused aromatic hydrocarbons & derivatives	Fused aromatic hydrocarbons & derivatives
22 - Fused non-alternant polycyclic hydrocarbons	Fused non-alternant polycyclic hydrocarbons
23 - Heterocyclic nitrogen compounds	Pyridine & substituted pyridines
	Fused 6-membered ring heterocycles
	Pyrrole & fused ring derivatives of pyrrole
	Nitrogen heterocycles containing addition hetero atoms
24 - Heterocyclic oxygen compounds	Heterocyclic oxygen compounds
25 - Heterocyclic sulfur compounds	Heterocyclic sulfur compounds
26 - Organometallics	Alkyl or aryl organometallics
	Sandwich type organometallics
	Metal porphyrins & other chelates

TABLE 12. POTENTIAL INORGANIC POLLUTANTS (20)

Group	Category	Element	Group	Category	Element
1A	27	Lithium	VIIA	57	Chlorine
	28	Sodium		58	Bromine
	29	Potassium		59	Iodine
	30	Rubidium	IIIB	60	Scandium
	31	Cesium		61	Yttrium
IIA	32	Beryllium	IVB	62	Titanium
	33	Magnesium		63	Zirconium
	34	Calcium		64	Hafnium
	35	Strontium	VB	65	Vanadium
	36	Barium		66	Niobium
IIIA	37	Boron		67	Tantalum
	38	Aluminum	VIB	68	Chromium
	39	Gallium		69	Molybdenum
	40	Indium		70	Tungsten
	41	Thallium	VIIB	71	Manganese
IVA	42	Carbon	VIII	72	Iron
	43	Silicon		73	Ruthenium
	44	Germanium		74	Cobalt
	45	Tin		75	Rhodium
	46	Lead		76	Nickel
VA	47	Nitrogen		77	Platinum
	48	Phosphorus	IB	78	Copper
	49	Arsenic		79	Silver
	50	Antimony		80	Gold
	51	Bismuth	IIB	81	Zinc
VIA	52	Oxygen		82	Cadmium
	53	Sulfur		83	Mercury
	54	Selenium	IIIB	84	Lanthanides
	55	Tellurium		85	Actinides
VIIA	56	Fluorine			

In addition, adequate controls are needed with regard to the potential dust nuisance and washing away of particulates. In many cases the material may be suitable for landfill with revegetation. Although there is already substantial background on this subject, specific information is needed on each coal and for each specific location in order to allow thorough planning to ensure that the disposal will be environmentally sound.

Liquefaction

In the liquefaction operation it is important to determine more about the fate of various constituents in the coal feed such as sulfur, oxygen, and nitrogen compounds, and other minor or trace elements.

In order to clarify environmental aspects, considerable additional information is needed on the formation of critical minor and trace compounds. The identity and amount for each of these should be determined since it can have a major effect on the selection of cleanup and disposal methods on the oil, water, and gas streams, as well as solid wastes.

Gas Cleaning

Desirable objectives for an acid gas removal process include: (a) effective removal of all forms of sulfur to yield a stream with a high sulfur concentration suitable for processing in a Claus sulfur plant, (b) effective CO_2 removal while producing a vent stream satisfactorily low in sulfur and pollutants, (c) low utility and energy consumption, (d) no waste streams that present a disposal problem (22). Amine scrubbing, proposed for use with the Synthoil and Exxon Donor Solvent processes, is not effective on carbonyl

sulfide, while contaminants such as cyanide interfere with regeneration of the scrubbing liquid. Hot carbonate systems do remove carbonyl sulfide, but it is often difficult to provide a highly concentrated stream of H_2S to send to the sulfur plant. In addition, the CO_2 stream vented to the atmosphere may contain too much sulfur. Adsorption and oxidation systems are often ineffective on carbonyl sulfide. In any event they do not remove CO_2 as required, and additional processing is needed. The available systems for acid gas removal have very high utility requirements, causing a significant loss in thermal efficiency for conversion of coal to clean fuel products. In addition there is often a waste stream of chemical scrubbing medium which may be difficult and expensive to dispose of. Systems based on physical solvents such as methanol appear to give a CO_2 vent stream that is excessively high in combustibles such as hydrocarbons and CO (22).

Wastewater Treatment

The need for a simple, effective method to clean up sour water for reuse is common to most fossil fuel conversion operations. Sour water generally contains sulfur compounds, ammonia, H_2S, phenol, thiocyanates, cyanides, and traces of oil. These are usually present in too high a concentration to directly route to biological oxidation, but their concentration is often too low to make recovery attractive. Particulates, if present, further complicate the processing of sour water. Usual techniques for cleanup include sour water stripping to remove H_2S and ammonia, and in addition, extraction may be required to remove phenols and similar compounds. Such operations require large amounts of electricity and, therefore, have a large effect on overall thermal efficiency.

Wastewater is discharged as cooling tower blowdown. Detailed study of the requirements for cleaning this water will be needed. Makeup water will contain dissolved solids including sodium and calcium salts. Calcium salts may be precipitated during the water treating operation to form a sludge which can be disposed with the other waste solids, but the fate of the sodium salts in the makeup water requires future study. These will leave with the blowdown from the cooling tower. If the concentration of dissolved solids is too high to allow discharging, then some suitable method of disposal will have to be worked out.

Trace Elements

Information is needed on the amount of trace elements vaporized and what happens to them, where they separate out and in what form, so that techniques can be devised for recovery or disposal. Specific information in this respect is needed for each coal and for each coal conversion process since operating conditions differ. In some cases, the trace elements may tend to recycle within the system and build up in concentration. The toxic nature of many of the volatile elements should be given careful consideration from the standpoint of emissions to the environment, as well as for protection of personnel during plant operation and maintenance. Carcinogenicity of polynuclear aromatic and other compounds present in trace amounts or formed during startup or upsets should also be evaluated. Clarification is needed regarding potential problems associated with trace elements in various plant effluents, such as spent catalyst from liquefaction and shifting or chemical purge streams from acid gas removal, tail gas cleanup, and stack gas scrubbing (22).

Protection of personnel, especially during maintenance operations, should be given careful attention. It will require additional information about the fate of trace elements. For example, toxic elements that vaporize in the gasifier may condense in equipment such as piping and exchangers. They could create hazards during cleaning operations (22).

Summary

In general it appears that each specific plan will require its own evaluation of environmental effects and control measures.

A list of potential pollutant sources is presented in Table 13. A list of examples of control approaches has been drawn up and is presented in Table 14. These approaches do not involve research and development of new ideas but rather the application of existing techniques.

TABLE 13. POTENTIAL POLLUTANT SOURCES (21)

Coal storage & handling	Separation/cleaning/treatment
- Windblown dusts	- Gas cleaning
- Water runoff	- Catalyst/sorbent regeneration
- Leakage and venting	- Claus plant
- Open conveyors	- Vents and flares
- Transport liquids	- Particulate collectors
- Vehicular transport	- Tar oil/water separators
	- Waste water treatment
	- Leaks
Coal preparation	- Cleaning agents and additives
- Coal drying	
- Grinding, pulverizing	Products and by-products
- Particulate collection	
- Coal washing	- Hydrotreating
- Pretreatment steps	- By-product recovery
- Vents	- Handling and storage
	- Utilization
Main process module	
	Waste disposal
- Raw material feed mechanism	
- Chemical/physical transformations	- Flyash, ash, and slag
- Leakage and venting	- Spent catalyst
- Flue gas	- Residues
	- Ponds
	- Landfills
	- Piles
	- Sludges

TABLE 14. CONTROL APPROACHES (21)

- Gas treatment
  - Mechanical collection
  - Electrostatic precipitators
  - Filters (fabric, granular, etc.)
  - Liquid scrubbers/contactors (aqueous, inorganic, organic)
  - Condensers
  - Solid sorbents (mol sieves, activated carbon)
  - Incineration (direct and catalytic)

- Liquids treatment
  - Settling, sedimentation
  - Precipitation, flocculation, sedimentation
  - Centrifugation and filtration
  - Evaporation and concentration
  - Distillation, flashing
  - Liquid-liquid extraction
  - Gas-liquid stripping
  - Neutralization
  - Biological oxidation
  - Wet thermal oxidation
  - Activated carbon absorption
  - Ion exchange system
  - Cooling tower (wet & dry)
  - Chemical reaction and separation

- Solids treatment
  - Fixation
  - Recovery/utilization
  - Processing/combustion
  - Chemical reaction and separation
  - Oxidation/digestion
  - Physical separation (specific gravity, magnetic, etc.)

- Final disposal
  - Pond lining
  - Deep well reinjection
  - Burial and landfill
  - Sealed-container storage
  - Dilution
  - Dispersion

- Process modifications
  - Feedstock change
  - Stream recycle

- Combustion modification
  - Flue gas recycle
  - Water injection
  - Staged combustion
  - Low excess air firing
  - Optimum burner/furnace design
  - Alternate fuels/processes

- Fuel cleaning
  - Physical separation (specific gravity, surface properties, magnetic)
  - Chemical refining
  - Carbonization/pyrolysis
  - Liquefaction/hydrotreating (HDS, HDN, demetallization)
  - Gasification/separation

- Fugitive emissions control
  - Surface coatings/covers
  - Vegetation
  - Leak prevention

- Accidental release technology
  - Containment storage
  - Flares
  - Spill cleanup techniques

SECTION 3

THE SYNTHOIL PROCESS

INTRODUCTION

The Synthoil coal liquefaction process involves catalytic hydrogenation of slurried coal. It is aimed specifically toward the conversion of high sulfur coals into nonpolluting, low sulfur liquid fuels for the electric utility industry (24).

Development of the Synthoil process was initiated by the U.S. Bureau of Mines in 1969 at the Pittsburgh Energy Research Center (PERC). Currently, the work is being managed by DOE. The initial work on the process used a reactor with an internal diameter of 8 mm in a bench-scale plant that processed 2.3 kg of slurry per hour. Experimental work was carried out on various coals, such as Pittsburgh Seam, Indiana No. 5, Middle Kittanning, Ohio No. 6, and Kentucky Homestead mine. All were satisfactorily converted to low sulfur fuel oil (24).

To demonstrate the broad applicability of the process, a 0.46-metric ton per day unit was constructed that used a reactor of 28.2 mm internal diameter made of two lengths of 4.4-m interconnected stainless steel pipes. The operations were carried out on various types of coal at reactor pressures of 14.2 and 28.4 MPa at 450°C. High yields of low sulfur and low ash fuel oil were obtained (25).

At the lower reactor pressure (14.2 MPa), the calorific value and yield of product oil were lower, hydrogen consumption was lower, and the sulfur and ash content of the product oil were higher than that of the oil produced at 28.2 MPa (26).

The overall design package for the 9.1-metric ton per day PDU was completed during the second quarter of 1975 by Foster Wheeler Energy Corporation, Livingston, New Jersey, which is also responsible for the construction management of the unit. This unit is expected to start operation in 1978. Laboratory research has been conducted on the Synthoil Process by Sandia Laboratories, Argonne National Laboratory, Battelle Memorial Institute, and Exxon Research and Engineering Company.

At this time, the only available information for the Synthoil process comes from the 0.46-metric ton per day bench-scale unit. Since this unit consists only of a reactor, gas separation devices, and a centrifuge for solids-liquid separations, process modules such as hydrogen production, and treatment and control can only be conceptualized, and the design for the 7,950-m^3 per day commercial facility is based on data from the bench-scale unit.

PROCESS DESCRIPTION

Overall Process and Operating Conditions

Figure 2 depicts the overall flow pattern for the Synthoil process, including both process and waste streams (27).

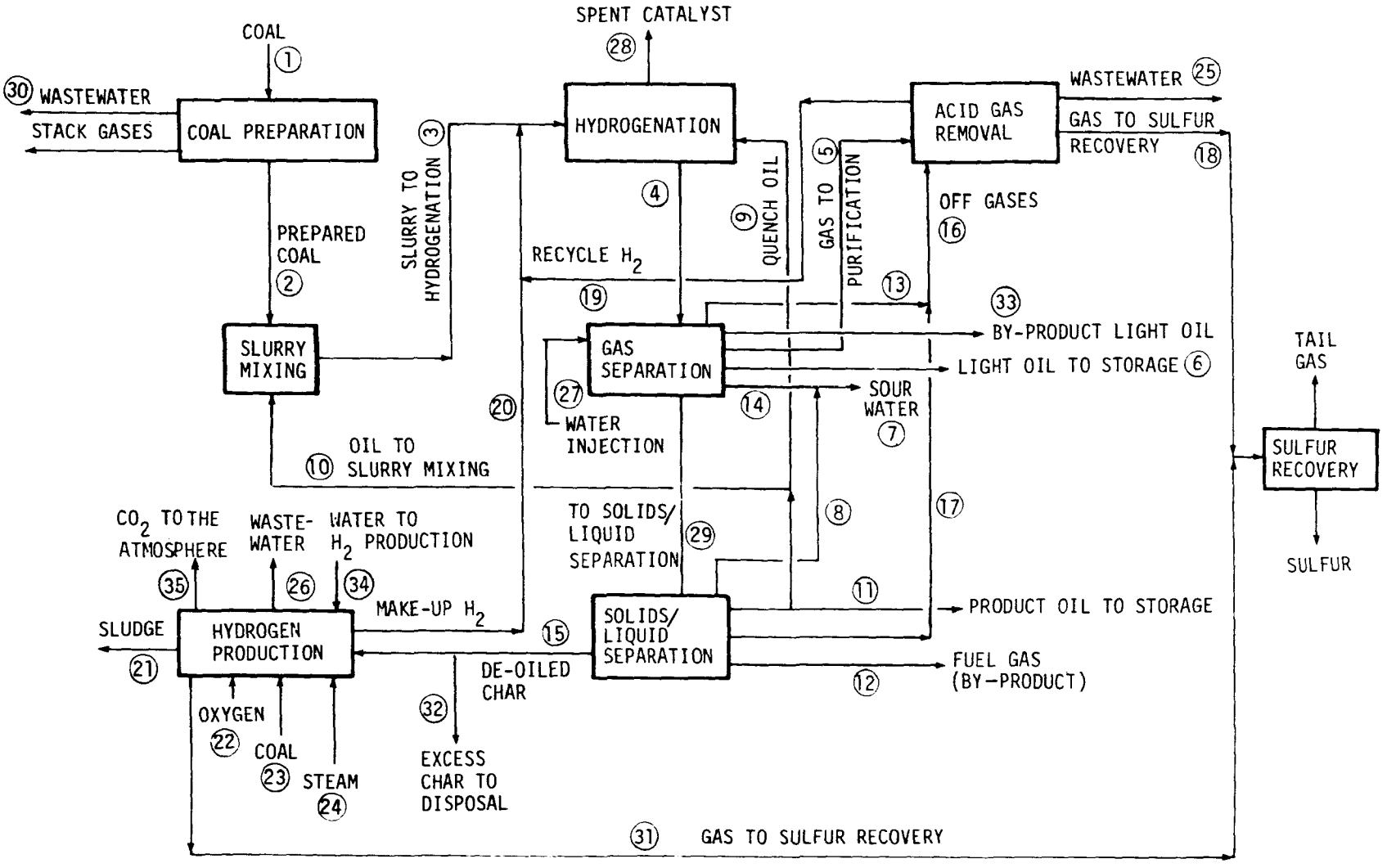

Figure 2. Overall synthoil process flow schematic (27).

In the coal preparation module, the coal is crushed, pulverized, and dried. In some cases it may also be washed. The processed coal, of 70-mesh screen size, is mixed with recycled oil to form a coal-oil slurry. The slurry is then mixed with preheated hydrogen and passed through a preheating system and into the reactor. The effluent from the reactor is a mixture of gases, liquids, and solids. This mixture passes through a series of pressure-reducing receivers where the gases are separated. The remaining liquid and unreacted solids enter a centrifuge where most of the oil is separated and sent to product storage and recycling. The oily char from the centrifuge passes through a char deoiling process where the mineral residue is stripped of most of the remaining oil via multihearth pyrolysis. Some fuel gas by-product is also produced when the mineral residue is pyrolyzed. The remaining oil, along with the remaining mineral residues, is sent to the hydrogen production module.

The gases, separated by flashing in the hot high pressure flash drums, enter cold high pressure flash drums where light oil and water are further separated from the gas. Light oil is sent to the cold low pressure flash drums and from there to the recontact tower and product storage. In the recontact tower, the recycle portion of the light oil absorbs light hydrocarbons from the gases entering the gas purification module for recycling. After the light hydrocarbons are removed, the hydrogen-rich gas passes through acid gas removal treatment and is sent, together with the make-up hydrogen, to the hydrogenation module.

Numerous waste streams are produced in the Synthoil process. The gases separated from the oil are directed to a gas purification system where they are cleaned and recycled. Wastewater streams are directed to by-product recovery and

then to the wastewater treatment facilities. Sludges and ash from hydrogen production are usually transported to landfills and minefills, respectively. Auxiliary facilities consist of steam and power generation, raw water supply, cooling towers, product and by-product storage, and oxygen generation. Each of these facilities also generates waste materials.

Overall Material Balance

The material balance for this process is based on the use of run-of-mine (ROM) coal from western Kentucky. The free moisture content of the coal is 7 to 10 percent before drying and 0.5 percent after drying. The following is the analysis of the coal after pulverizing and drying (27):

Component	wt (percent)
C	60.72
H	4.77
N	1.19
S	5.45
O	11.37
Ash	16.5
	100.00

The liquid product from the Synthoil process consists of heavy and light species of fuel oil. Physical characteristics of heavy oil produced in the bench-scale unit are (27):

Specific gravity at 15.6°C = 1.04
Viscosity at 25°C = 4500 SSU
Viscosity at 82°C = 102 SSU

TABLE 15. MATERIAL INVENTORY - SYNTHOIL PROCESS (27)

Stream description	coal	Prepared coal	Slurry to hydrogenation	Reactor effluent	Gas to purification	Light oil product	Sour water	Sour water	Quench oil	Oil to slurry mixing
Number*	1	2	3	4	5	6	7	8	9	10
Composition										
Coal	25,183	15,041	15,037							
Water		82	82	1,731	10		3,412	30.8		
Oil			27,228	44,633	265	1,545	9.4	0.2	8,080	27,228
Residue			842	4,440					252	843
Gases				12,763	11,247	1.0	137	0.2		
Total	25,183	15,123	43,189	63,567	11,522	1,546.0	3,558.4	31.2	8,332	28,071

Stream description	Product oil	Fuel gas (by-product)	Off gas	Sour water No. 1	Char	Off gas composite	Off gas	Gas to sulfur recovery	Recycle H_2	Make-up H_2
Number*	11	12	13	14	15	16	17	18	19	20
Composition										
Coal										
Water			0.1	3,381		0.3	0.2	2.4	8.2	
Oil	6,111		0.1	9.2					254	
Residue	138				3,208					
Gases		661	768	136.7		842	12.0	1,680.5	10,377	1,378
Total	6,249	661	768.2	3526.9	3,208	842.3	12.2	1,682.9	10,639.2	1,378

Stream description	Sludge	Oxygen	Coal to H_2 production	Steam	Wastewater from acid gas removal	Wastewater from H_2 production	Water injection (into gas stream)	Spent catalyst	Effluent from gas separation	Wastewater from coal preparation
Number*	21	22	23	24	25	26	27	28	29	30
Composition										
Coal			2,987							
Water	1,411		15		9.6	1,385	1,727		31	
Oil									46,072	
Residue	2,116								4,441	
Gases		3,514							12.2	
Total	3,527	3,514	3,002	4,990	9.6	1,385	1,727	N.A.**	50,556.2	N.A.**

*Refers to Figure 2. Based on an output of 7,950 m^3 of Synthoil per day. All values are in metric tons/day.

**Not available.

(continued)

TABLE 15. (continued)

Stream description	Acid gas from H_2 production	Excess char to disposal	By-product light oil	Water to H_2 production	CO_2
Number*	31	32	33	34	35
Composition					
Coal					
Water				1,341	
Oil		21	1,135		
Residue		369			
Gases	8,532		1.8		1,002
Other	9.2				
Total	8,541.2	390	1,136.8	1,341	1,002

*Refers to Figure 2. Based on an output of 7,950 m^3 of Synthoil per day. All values are in metric tons/day.

Typical properties of light oil produced are (27):

API gravity	= 30-40°API
Initial boiling point	= 38°C
Normal boiling point	= 177 to 193°C

In addition, liquid and gas by-products of unknown qualities are produced in the process. The gaseous by-product is assumed to consist mostly of hydrogen and methane. The liquid by-product is expected to have characteristics similar to those of the light oil produced. These by-products may be used internally in the plant for power generation, steam production, other thermal conversion, or may be sold as fuels.

Table 15 presents a material inventory for the Synthoil process, including coal feed for hydrogenation and hydrogen production, products and by-products, and major waste streams before treatment. Waste streams leaving the plant after treatment as well as materials recovered from the wastes are discussed and quantified in Section 8. The design of the 9.1-metric ton per day pilot plant served as a basis for scale-up of the process and waste streams (27). Both the material balance for the pyrolysis of centrifuged residue and the steam requirements were taken from the conceptual design of the 7,950-m^3 per day commercial plant (28). Some modifications are based on the results of laboratory studies of the Synthoil process.

A material balance is shown in Table 16.

TABLE 16. OVERALL MATERIAL BALANCE-SYNTHOIL PROCESS* (27)

Input		Output	
Material	Metric tons per day	Material	Metric tons per day
Coal to hydrogenation	15,123	Heavy fuel oil	6,248 (6,267 m^3)
Coal to hydrogen production	3,002	Light oil	1,546 (1,682 m^3)
		Liquid by-product	1,137
Coal to steam and electricity production	3,480	Sour water from the process	3,397
Oxygen	3,514	Wastewater from hydrogen production	1,385
Cooling water make-up	23,043	Sludge from hydrogen production	3,526
Process water injection	1,727	Excess char from the solid-liquid separation	390
Steam	4,990	Phenols	9
Water requirements for hydrogen production	1,341	Sulfur	712
		Ammonia	125
Boiler feedwater	390	Waste gas (including evaporation and drift)	27,599
Total	56,610		
		Cooling water blowdown	621
		Miscellaneous wastes (including wastes from steam and power generation)	9,915
		Total	56,610

*Based on a production rate of 7,950 m^3/day.

Material and Energy Considerations

Process Material Yields--

The product yield in unit weight of product oil plus light oil per unit weight of coal prepared for liquefaction is 0.52. The yield based on total coal (including utility needs) used is 0.31.

Process Thermal Efficiency--

The thermal efficiency* serves as a means of measuring the effectiveness of the process for making clean fuels from coal. The process thermal efficiency is defined as:

$$\frac{\text{The heating value of all clean products (joules)}}{\text{The heating value of coal to the reactor + the heating value of make-up gas (joules)}}$$

$$= \frac{253 + 63\ (TJ)}{394 + 73\ (TJ)} = \frac{316\ (TJ)}{467\ (TJ)} \times 100 = 68\%$$

The data in Table 17 indicate the heating values for products and materials used in the Synthoil process.

TABLE 17. HEATING VALUE OF SELECTED PRODUCTS AND MATERIALS IN THE SYNTHOIL PROCESS (26,28)

Input	Metric TPD	MJ/kg	TJ/day
Coal	21,605	26.5	563
Output			
Product oil	6,248	40.5	253
Light fuel oil	1,546	40.5	63
Liquid by-product	1,137	40.5	46
By-product gas	729	51.2	37

*This calculation is a first law thermodynamics efficiency. It considers only heat quantity values.

Overall Thermal Efficiency--

The overall thermal efficiency permits an estimate of the overall heat utilization as the result of the process and required auxiliary operations. The overall thermal efficiency is defined as:

$$\frac{\text{The heating values of the products + the heating values (joules) of the combustible by-products}}{\text{The heating values of all raw materials consumed by the process and auxiliary facilities (joules)}}$$

$$= \frac{399\ (TJ)}{563 + 11.2\ (TJ)} \times 100 = 70\%$$

Heat consumed in the direct fired heaters and preheaters throughout the process is assumed to be 2 percent of total coal feed energy input (26), or 11.18 TJ.

DESCRIPTION OF THE PROCESS MODULES

The Synthoil process can be divided into several modules, each of which serves a specific function in the overall process. This division serves a dual purpose in this report:

- It facilitates comparison of different liquefaction processes and eliminates redundant description of interchangeable modules;
- It facilitates identification and classification of waste streams originating in the process and selection of control and treatment technologies.

The following modules and processes have been identified in the Synthoil process:

- hydrogenation
- gas separation
- solids separation

Auxiliary processes include hydrogen generation, acid gas removal, steam generation, raw water supply, oxygen generation, by-product recovery, and wastewater treatment facilities.

The modules above, with the exception of auxiliary facilities, are discussed in the following subsections of the report. Auxiliary facilities are discussed in Section 6. Gas separation and solids-liquid separation are two arbitrarily selected parts of one operation - separation of the phases.

Hydrogenation Module

A simplified description is presented herein to illustrate the operations in the hydrogenation module, shown in Figure 3. The prepared slurry of slurried coal and solvent is pumped into the preheater and reactor at a working pressure of 32.06 MPa. Make-up hydrogen, added to the recycle gas, makes up the reactor feed gas. The reactor feed gas is split into two streams (27).

About 20 percent of the reactor gas is introduced into the slurry feed at the outlet of the slurry feed pump. The other 80 percent of the reactor gas is heated first by heat exchange with reactor effluent and then by a fired heater to about 563°C. The combined gas and slurry stream is then heated to about 232°C, well below the plastic range of slurry, by heat exchange with the reactor effluent. The two streams are then mixed to bring the resultant mixture quickly through the plastic range of slurry to 382°C, and

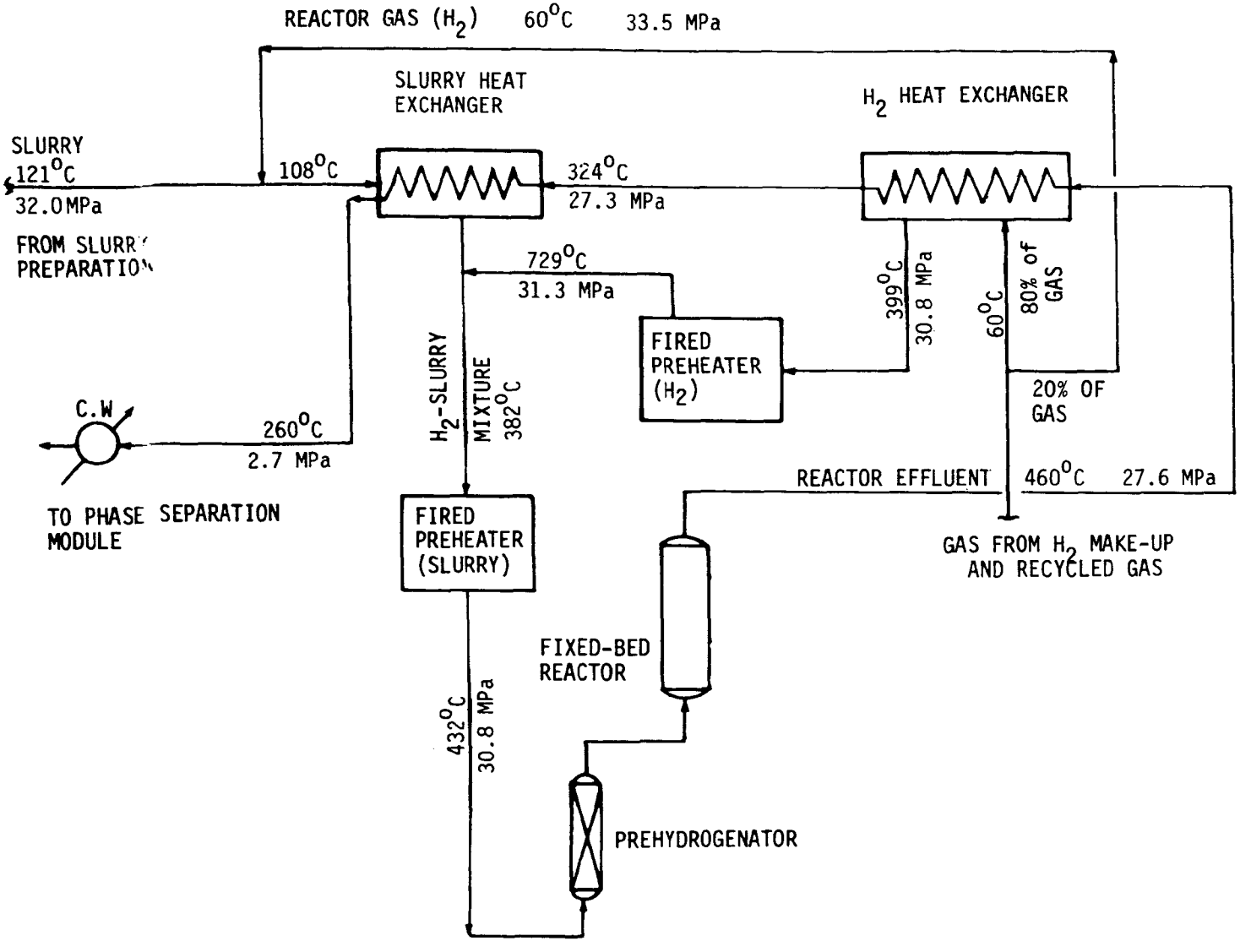

Figure 3. Synthoil process flow diagram -hydrogenation module (27)

the mixture is further heated in the reactor feed heater to the reaction temperature, 432°C (460°C maximum) (27).

From the reactor feed heater the mixture flows to the prehydrogenator, a drum packed with inert cylinders, and then through the reactor. The reactor consists of four beds (each with a maximum depth of 15 feet) of hydrogenation catalyst. Each catalyst bed is housed in a separate vessel. Used in the reactor is a Co-Mo catalyst on an alumina support (1/8 x 1/8 in. pellets of Harshaw 0402T). In the reactor, part of the sulfur, oxygen, and nitrogen compounds in the coal are hydrogenated, and organic coal constituents are simultaneously hydrogenated into a less viscous liquid. Flow through the prehydrogenator and the reactor is upward. Quench oil is injected between the prehydrogenator and the reactor and between reactor catalyst beds to control bed inlet temperatures and limit the overall temperature rise across the reactor to 23°C (27).

Heat in the reactor effluent is recovered by heat exchange with reactor gas and then with feed slurry plus 20 percent reactor gas in separate heat exchangers. Reactor effluent can also be switched, using swing elbows, to go through the reactor effluent bypass cooler instead of the heat recovery exchangers when heat recovery is not used. Reactor effluent is then further cooled and flows into the hot high pressure separator, where the gas in the reactor effluent is separated from the liquid and solids (27).

Process and Waste Streams--

Module streams are shown in Figure 4. Stream constituents are quantified in Table 18. While the hydrogenation module has no direct continuous discharge to the environment, the materials of environmental significance which

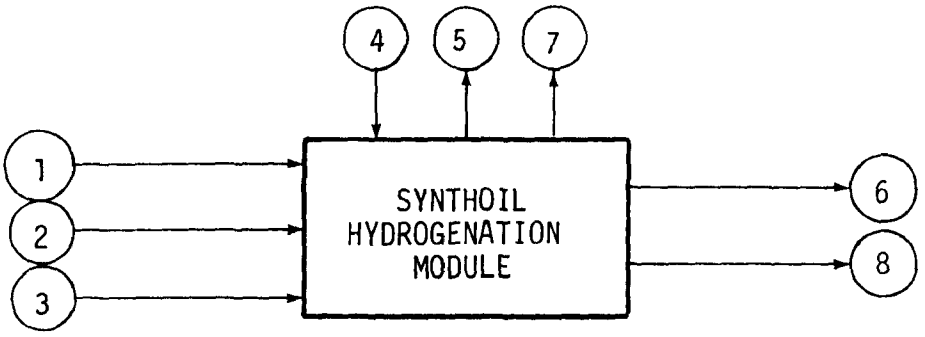

STREAM	METRIC TONS PER DAY
1. SLURRY	43,194
2. QUENCH OIL	8,332
3. RECYCLE GAS	10,639
4. MAKE-UP H_2	1,378
5. FLUE GASES	NOT QUANTIFIED
6. REACTOR EFFLUENT	63,537
7. VAPOR LEAKAGE	NOT QUANTIFIABLE
8. TRANSIENT SPILLS	NOT QUANTIFIABLE

Figure 4. Synthoil hydrogenation module process and waste streams

appear in subsequent or downstream modules are formed or released from the coal during hydrogenation.

Most of the nitrogen and sulfur in the coal are largely hydrogenerated to ammonia and hydrogen sulfide. The liquid hydrocarbon product from the hydrogenation module contains a wide range of organic compounds acknowledged to be hazardous to the environment. Analyses of the compounds identified in light species from the Synthoil process are given in Table 19.

TABLE 18. SYNTHOIL HYDROGENATION MODULE PROCESS AND WASTE STREAMS (EXTRACTED FROM TABLE 15)

Stream*	Metric tons per day
1. Slurry of coal and recycle oil	
Coal	15,041
H_2O	82
Oil	27,227
Residue	842
	43,192
2. Quench oil	
Oil	8,080
Residue	252
	8,332
3. Recycle gas	
H_2O	8.2
H_2	4,910
HC	5,171
CO	290
CO_2	5.6
Oil (light)	254
	10,638.8
4. Make-up gas (H_2)	
H_2	603
CO	603
CO_2	137
N_2	35
	1,378
6. Reactor effluent	
H_2O	1,731
Hydrocarbons	5,781
H_2S	625
NH_3	132
H_2	4,910
CO	291
CO_2	994
Oil	44,633
Solids	4,440
	63,537

*Refer to Figure 4.

TABLE 19. LIGHT OIL COMPOSITION - SYNTHOIL PROCESS (29)

FRACTION I*		FRACTION III*		FRACTION IV*	
Compound(s)	Weight (%)	Compound(s)	Weight (%)	Compound(s)	Weight (%)
cyclohexane	3.9	cyclohexane	0.1	benzene	0.3
n-heptane	1.9	methylcyclohexene	.3	2-pentanone	.2
methylcyclohexane	6.5	3 or 4-methylcyclohexene	.6	toluene	8.0
2-methylheptane	1.4	toluene and 1-methylcyclohexene	1.4	3-hexanone	.2
2,4-dimethylhexane	1.4	1,2-dimethylcyclohexene	.7	unknown	.6
n-octane	5.7	1-ethylcyclohexene	.5	dimethylhexane	4.7
dimethylcyclohexane	10.6	n-propylbenzene	3.4	phenol plus a C_3-benzene	4.9
n-nonane	9.2	isopropylbenzene	8.9	indan	5.1
isopropylcyclohexane	9.0	C_4-benzene	3.9	cresol plus methylindan	6.3
trans-bicyclo 4.3.0 nonane	2.6	indan and propyltoluene	13.2	cresol	9.5
n-decane	6.1	1-methylindan	4.0	methylindan	2.7
cis-bicyclo 4.3.0 nonane	5.5	5-methylindan	3.8		
trans-decalin	1.2	4-methylindan	2.7	xylenol plus methylindan	2.6
n-butylcyclohexane	3.4	tetralin	6.0	xylenol plus tetralin	7.7
methylbicyclo 4.3.0 nonane	3.4	1,6-dimethylindan	1.9	xylenol	3.8
n-undecane + cis decalin	5.1	naphthalene	.8	naphthalene	5.5
methyldecalin	2.4	2-methyltetralin	2.5	2-methylnaphthalene	2.6
methyldecalin	.7	C_6-benzene	1.3	1-methylnaphthalene	1.0
n-dodecane	.9	6-methyltetralin	4.0	C_2-naphthalene	.5
n-tridecane	.1	2-methylnaphthalene	2.1	C_2-naphthalene	.3
ethyldecalin	.3	1-methylnaphthalene	.8	C_2-naphthalene	.6
n-tetradecane	trace	ethylnaphthalene	1.3	biphenul	.2
(balance unidentified)	81.3	dimethylnaphthalene	1.2	dibenzofuran	.1
		dimethylnaphthalene	.7	biphenylmethane	.2
		dimethylnaphthalene	.9	tetrahydrocarbazole	.3
		C_3-naphthalene	.5	methyltetrahydrocarbazole	.2
		C_4-naphthalene	.2	methyltetrahydrocarbazole	.3
		C_4-naphthalene	.2	(balance unidentified)	68.4
		tetrahydrophenanthrene or tetrahydroanthracene	.1		
		(balance unidentified)	68.0		

*The light oil was separated into fractions by chromatography. Fraction I constituted 44% of the oil while Fractions II, III, and IV were 9, 28 and 19 percent, respectively.

NOTE: Fraction II contained only saturated components similar to those detected in Fraction I and, therefore, is not shown.

Table 20 lists major structural types identified in the heavy oil fraction from the Synthoil process, while Table 21 shows concentrations of polynuclear aromatic hydrocarbons in the product oil.

TABLE 20. MAJOR STRUCTURAL TYPES IN HEAVY OIL FROM SYNTHOIL PROCESS (30)

Structural types*	Percent
Alkylbenzenes	11
Indenes	7
Indans	9
Naphthalenes	6
Acenaphthylenes	12
Biphenyls	21
Anthracenes; phenanthrenes	6
Phenylnaphthalenes	5
4-rings, peri-condensed	5
4-rings, cata-condensed	3
5-rings, peri-condensed	4
5-rings, cata-condensed	1
6-rings, peri-condensed	1
Phenols	9

*Including alkyl derivatives.

TABLE 21. PAH-COMPOUNDS IN SYNTHOIL OIL (31)

Compound	Concentration in ppm
phenanthrene	413
benzo(a)anthracene	18
benzo(a)pyrene	41

Table 22 lists organic sulfur compounds identified in the products of hydrogenation of Kentucky and Indiana coals.

TABLE 22. ORGANIC SULFUR COMPOUNDS IN THE SYNTHOIL PRODUCTS OF COAL HYDROGENATION (31)

	Indiana #5 coal		Kentucky coal	
	Mol. form	Identification[1]	Mol. form	Identification[1]
Light oil	C_8H_6S	Benzothiophene	C_5H_6S	Methylthiophene
	C_9H_8S	Methylbenzothiophene	$C_6H_{10}S$	Diallysulfide
	$C_{10}H_{10}S$	Dimethylbenzothiophene	$C_6H_{10}S$	Diallysulfide
Product oil	C_5H_6S	Methylthiophene	$C_{14}H_8S$	Benzo def dibenzothiophene
	$C_8H_{10}S$	Tetrahydrobenzothiophene	$C_{16}H_{10}S$	Naphthobenzothiophene
	$C_{11}H_{10}S$	Benzylthiophene	$C_{17}H_{12}S$	Methylnaphthobenzothiophene
	$C_{12}H_8S$	Dibenzothiophene	$C_{20}H_{12}S$	Dinaphthothiophene
	$C_{13}H_{10}S$	Methyldibenzothiophene	$C_{21}S_{14}$	Methyldinaphthothiophene
	$C_{14}H_8S$	Benzo def dibenzothiophene		
	$C_{16}H_{10}S$	Naphthobenzothiophene		
	$C_{17}H_{12}S$	Methylnaphthobenzothiophene		
	$C_{20}H_{12}S$	Dinaphthothiophene		
Asphaltenes	Spectrum not well resolved		$C_{16}H_{10}s$	Naphthobenzothiophene
			$C_{20}H_{12}S$	Dinaphthothiophene

[1]Based upon molecular formula determined by high-resolution mass spectrometry. Other isomeric forms possible in some instances.

Gas Separation Module

Module Description--

The gas separation module separates light hydrocarbons and other gaseous products from the reactor effluent. In it, lighter oils and sour water are also separated. This is achieved in a series of pressure and temperature-reducing flashing and condensing steps. Figure 5 depicts the flow of process streams through the module and shows the interconnections.

Reactor effluent flows into the hot high pressure separator where a portion of gas is separated, cooled, and sent to the cold high pressure separator. Water injected into this gas stream scrubs out some ammonia and hydrogen sulfide and leaves the cold high pressure separator as sour water. The overhead gas from the cold high pressure separator still contains environmentally significant components which are partially removed in the light ends absorber, a packed bed tower.

In the light oil stripper, Figure 5, most of the ammonia, hydrogen sulfide, and other environmentally significant components are stripped out of the light oil and sent to acid gas removal. Sour water is removed from the bottom of the light oil decanter. Light oil from the light oil decanter is directed to the product storage; however, it may require hydrotreatment to remove sulfur compounds. Off gases from this unit contain significant amounts of H_2S, NH_3, and other environmentally significant components.

All off gases from this module are routed to acid gas removal. Three units produce sour water which is routed to wastewater treatment.

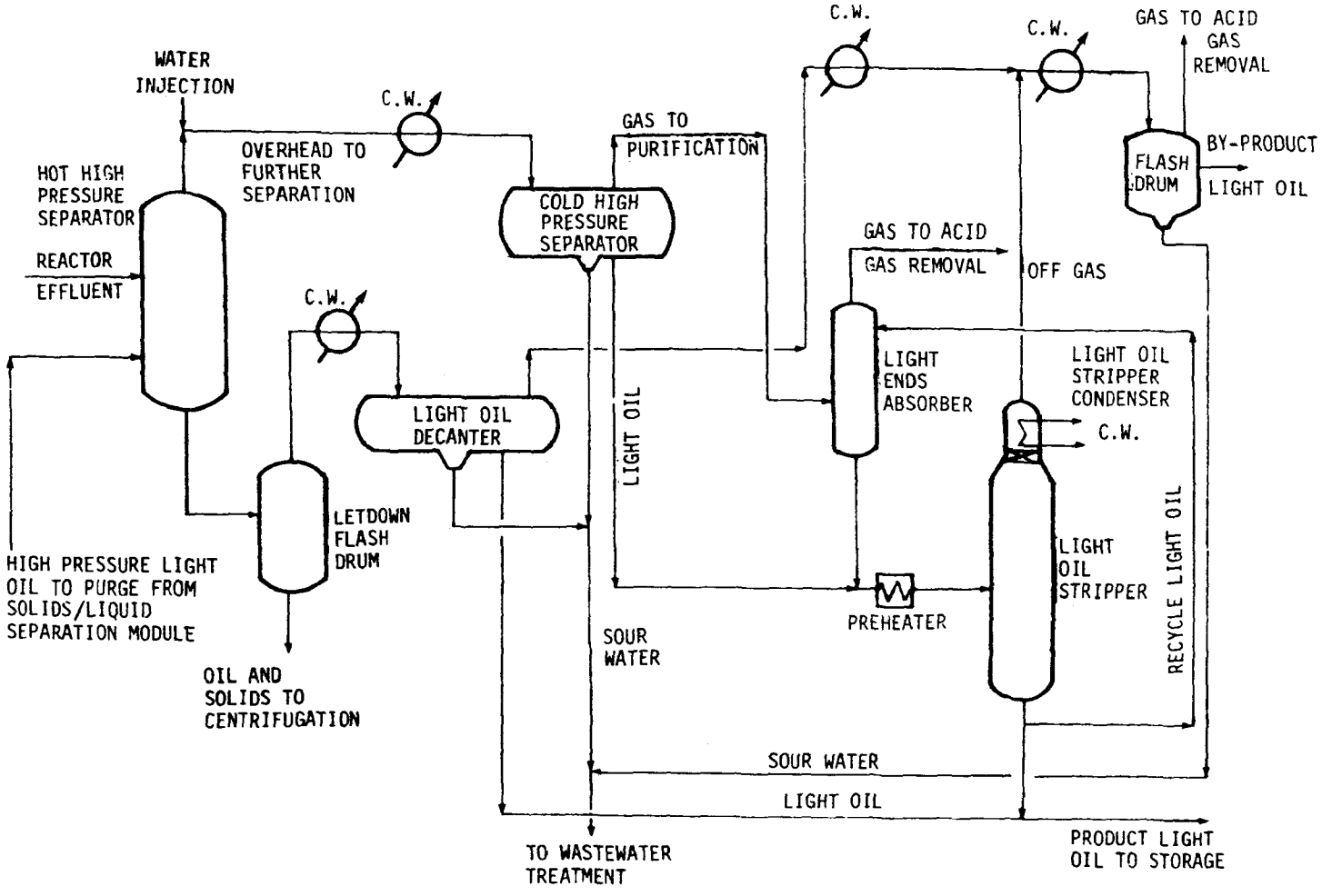

Figure 5. Synthoil process flow diagram - gas separation module (27)

Process and Waste Streams--

Module streams are shown in Figure 6. Stream constituents are quantified in Table 23. The only continuous wastewater stream leaving the module is the combined sour water which comes from the bottom streams of the cold high pressure separator, light oil decanter, and flash drum. This sour water will contain H_2S, NH_3, and soluble oil compounds (see waste streams, Table 23).

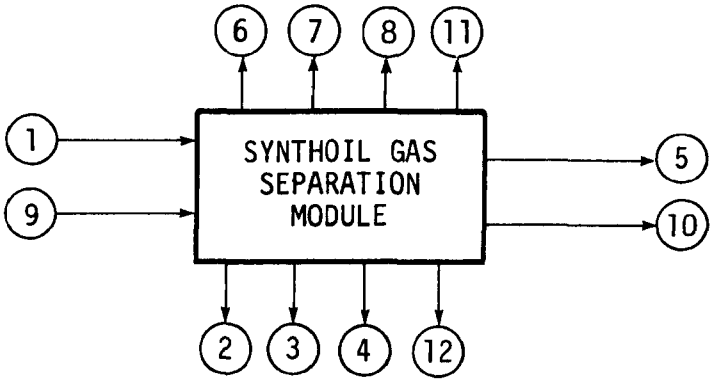

	STREAM	METRIC TONS PER DAY
1.	REACTOR EFFLUENT	63,537
2.	OIL AND SOLIDS TO SEPARATION	50,555.3
3.	SOUR WATER	3,526.3
4.	PURGE OIL FROM SOLIDS-LIQUID-SEPARATION	3,759.0
5.	LIGHT OIL TO STORAGE	1,546.0
6.	FLUE GASES	NOT QUANTIFIED
7.	OFF GASES TO ACID GAS REMOVAL	768
8.	PARTIALLY PURIFIED GAS TO ACID GAS REMOVAL	11,522.1
9.	WATER INJECTION	1,727.0
10.	BY-PRODUCT LIGHT OIL	1,136.8
11.	VAPOR LEAKAGE	NOT QUANTIFIABLE
12.	TRANSIENT SPILLS	NOT QUANTIFIABLE

Figure 6. Synthoil gas separation module process and waste streams

TABLE 23. SYNTHOIL GAS SEPARATION MODULE PROCESS AND WASTE STREAMS (EXTRACTED FROM TABLE 15)

Stream*	Metric tons per day
1. Reactor effluent	
H_2O	1,731
Hydrocarbons	5,781
H_2S	625
NH_3	132
H_2	4,910
CO	291
CO_2	994
Oil	44,633
Solids	4,440
	63,537
2. Oil and solids to solids separation module	
H_2O	31
Oil	46,072
Solids	4,440
Hydrocarbons	8.2
H_2S	4.1
	50,555.3
3. Sour water	
H_2O	3,381
H_2S	11
NH_3	125.1
Oil (phenols)	9.2
	3,526.3
4. Purge oil	
Oil	3,759
5. Light oil to storage	
Oil	1,545
H_2S	1
	1,546
7. Off gases to acid gas removal	
H_2O	0.1
H_2	128.6
H_2S	183
NH_3	3.6
HC	453
	768.3

(continued)

TABLE 23 (continued)

Stream*	Metric tons per day
8. Partially purified gas to acid gas removal	
H_2O	10.3
H_2	4,781.7
H_2S	425.5
HC	4,750.7
NH_3	3.0
CO	291.2
CO_2	994.5
Light oil	265.2
	11,522.1
9. Water injection	
H_2O	1,727
10. By-product light oil	
Oil	1,135
H_2S	1.8
	1,136.8

*Refer to Figure 6.

Table 19 showed the expected composition of light oil product from the Synthoil process. Compounds that may be in the sour water stream are phenol, cresols, and xylenols. All are slightly soluble in water. They will comprise most of the estimated 9.4 metric tons per day oil species discharged with the sour water. Small amounts of other constituents of the light oil may be emulsified in the sour water.

Organic sulfur compounds identified in the light oil from the Synthoil process are methylthiophene, diallylthiophene and diallylsulfide (when Kentucky coal was hydrogenated). Diallylsulfide is slightly soluble in water, and only trace amounts of it may be discharged with the sour water.

Since all of the off gases are sent to the acid gas removal, there are no continuous gas emissions to the atmosphere from this module. Hydrocarbon vapor leakage and accidental spills are two potential intermittent emission sources.

Flue gas from the preheater should be environmentally clean, since the fuel gas produced in the solids-liquid separation module is used. This gas consists of hydrogen and methane with minor amounts of impurities.

Solids Separation Module

Module Description--

The purpose of the solids separation module is to separate the undissolved coal and mineral matter from the coal liquefaction product. The first process in the module is a centrifuging to remove suspended particles of mineral matter and partially reacted coal from the liquid product. The solids that are separated by centrifuging are permeated with oil. To recover this oil, the solids are pyrolyzed at temperatures of about 149°C in a second process.

Both processes were successfully tested on the bench-scale unit and in laboratories. Appreciable quantities of oil, amounting to as much as 53 weight percent of the solids on an ash-free basis, were recovered by pyrolyzing. Figure 7 represents an overall flowsheet for the module, while Figure 8 shows the equipment and technological procedures employed in the pyrolyzing.

Liquid and solids from the bottom of the letdown flash drum are sent to the centrifuge, where oily char is separated from oil and sent to the char de-oiling process (see Figure 7). This oily char is fed to the multiple hearth roaster

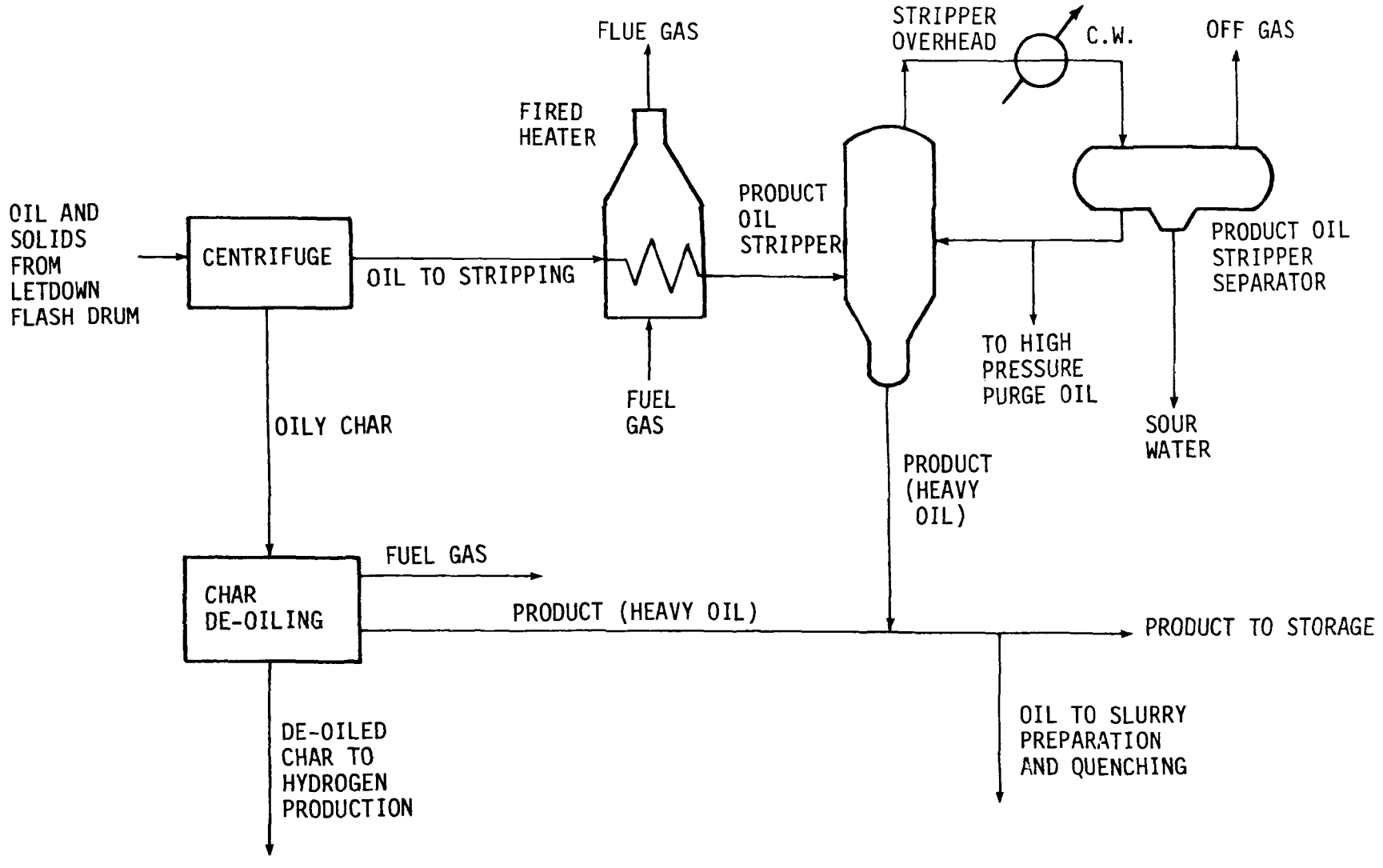

Figure 7. Synthoil process flow diagram - solids separation module (27)

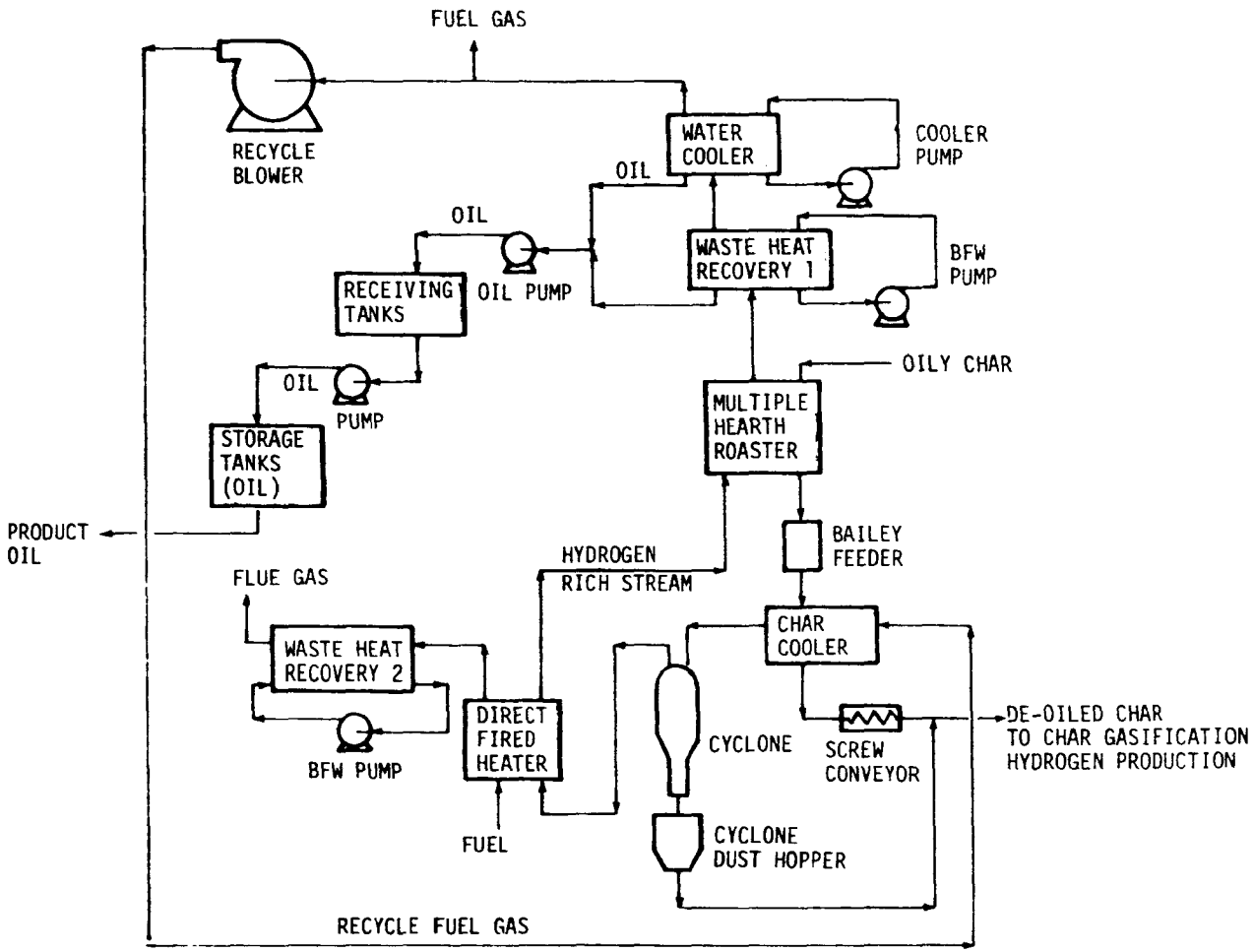

Figure 8. Synthoil char de-oiling process flowsheet (28)

where oil is separated (complete separation of oil is assumed). As shown in Figure 8, recycled fuel gas (by-product) is used to cool the de-oiled char.

Oil separated by centrifugation is pumped through a preheater to the product oil stripper. About 20 percent of the oil is vaporized in the preheater. This vapor-liquid mixture enters the product oil stripper. The vapor rising within the stripper is cooled and partially condensed by the refluxed liquid.

The vapor leaving the stripper contains water, H_2S, ammonia, and light oil vapors. This vapor is cooled and sent to the product oil stripper separator, where condensed light oil is sent back to the product oil stripper (part of it is taken off as purge oil). Condensed water is removed from the bottom as sour water. Off gases from the separator are sent to acid gas removal.

Process and Waste Streams--

There are three continuous waste streams generated in the module: sour water from the product oil stripper separator, excess de-oiled char, and flue gases from the preheaters. Figure 9 shows the module input-output streams. Table 10 gives the stream constituents.

The sour water composition is expected to be similar to that of the sour water generated in the phase separation module, because it is separated from the same type of light oil as in the product stripper separation (Table 23). Hence, discussion of the composition of sour water from phase separation is applicable to this stream.

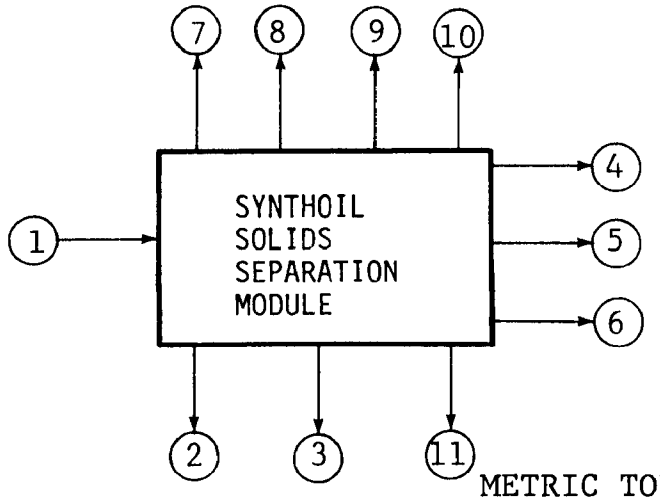

STREAM		METRIC TONS PER DAY
1.	OIL AND SOLIDS FROM GAS SEPARATION	50,555.3
2.	CHAR TO HYDROGEN PRODUCTION	3,392.0
3.	SOUR WATER	31.2
4.	PRODUCT OIL	6,249.0
5.	OIL TO SLURRY PREPARATION AND QUENCHING	36,403.0
6.	PURGE OIL	3,749
7.	FLUE GASES	NOT QUANTIFIED
8.	OFF GAS TO ACID GAS REMOVAL	12
9.	FUEL GAS	661
10.	VAPOR LEAKAGE	NOT QUANTIFIABLE
11.	TRANSIENT SPILLS	NOT QUANTIFIABLE

Figure 9. Synthoil solids separation module process and waste streams

From the total of 3392 metric tons per day of char leaving the module after cooling (Table 24), 3002 metric tons per day is used in the hydrogen production.

TABLE 24. SYNTHOIL SOLIDS SEPARATION MODULE PROCESS AND WASTE STREAMS (EXTRACTED FROM TABLE 15)

Stream*	Metric tons per day
1. Oil and solids from gas separation	
H_2O	31
Oil	46,072
Solids	4,440
Hydrocarbons	8.2
H_2S	4.1
	50,555.3
2. Char to H_2 production	
Solids	3,208
Oil	184
	3,392
3. Sour water	
H_2O	30.8
NH_3	trace
H_2S	0.2
Oil and phenols	0.2
	31.2
4. Product oil to storage	
Oil	6,111
Residue	138
	6,249
5. Oil to slurry preparation and quenching	
Oil	35,308
Residue	1,095
	36,403
6. Purge oil	3,759
8. Off gas to acid gas removal	
H_2O	0.2
Hydrocarbons	8.2
H_2S	3.9
	12.3
9. Flue gas	661

*Refer to Figure 9.

Excess char at the rate of 370 metric tons per day is disposed of as solids waste. The ultimate analysis of this char is given in Table 25.

TABLE 25. ANALYSIS OF RESIDUES FROM PYROLYSIS OF CENTRIFUGED SOLIDS - SYNTHOIL PROCESS (32)

Component	Ultimate analysis percent
Hydrogen	2.5
Carbon	34.5
Nitrogen	0.4
Sulfur	8.7
Ash	54.3

The char is contaminated with traces of remaining heavy oil and tars. Analysis of aromatics in heavy oil product from pyrolysis of centrifuged liquids is given in Table 26.

TABLE 26. ANALYSIS OF AROMATICS IN HEAVY OIL PRODUCT FROM PYROLYSIS OF CENTRIFUGED SOLIDS SYNTHOIL PROCESS (32)

Structural type	Percent of total
Benzenes	10.0
Naphthalenes	12.3
Anthracenes, phenanthrenes	5.7
Acenaphthylenes, fluorenes	8.5
Phenylnaphthalenes, methylene phenanthrene	3.6
4-ring cata-condensed, benzofluorenes	2.3
4-ring peri-condensed, benzofluorenes	3.6
Indenes	10.2
Acenapthalenes, biphenyls	12.6
Indans, tetralins	15.7
Phenols	12.6
Dihydric phenols	3.1

Table 27 shows expected concentration of some trace elements in the centrifuge residues. Since the volatility of these elements at the temperature of pyrolysis is negligible, it is assumed that most of these trace elements will be discharged with the char from pyrolysis.

TABLE 27. TRACE ELEMENTS IN THE CENTRIFUGED RESIDUES - SYNTHOIL PROCESS (33)

Element	Concentration ppm by weight
Cr	84
Mn	180
Ni	53
Cd	1
Pb	18

Previous Tables 20 through 22 give some expected structural types of organic compounds in heavy oil separated in the centrifuge, organic sulfur compounds in the products from the Synthoil process, and concentrations of PAH compounds in the product (heavy) oil.

Acid Gas Removal Process

Process Description--

The gas separation module and the solids separation module generate gases contaminated with hydrogen sulfide, ammonia, carbon dioxide, and small amounts of carbon disulfide, and carbonyl sulfide. These substances are formed from the hydrogenation of phenols, aromatic amines, mercaptans, and sulfides naturally present in the parent coal. Reaction of the coal and hydrogen yields these contaminant gases along with more saturated hydrocarbon molecules (desired product). In the acid gas removal process most of the carbon disulfide, carbon dioxide, and carbonyl sulfide

are removed from the gas stream, leaving a purified gas which can be recycled into the reactor.

Figure 10 presents a schematic flow diagram of the acid gas removal process. The process consists of a number of parallel process trains, each train carrying out a similar function. A representative train is shown.

A gas stream entering the process would be pumped to the amine absorber. The gas stream is passed counter currently through a 15 to 20 percent solution of monoethanolamine (MEA) in the amine absorption tower. Hydrogen sulfide and carbon dioxide, present along with trace amounts of carbon disulfide and carbonyl sulfide, form complexes with the MEA as described by the following reactions:

(1) $HOCH_2CH_2NH_2 + H_2S \rightleftharpoons HOCH_2CH_2NH_3HS$

(2) $HOCH_2CH_2NH_2 + CO_2 \rightleftharpoons HOCH_2CH_2NH_3CO_3$

(3) $HOCH_2CH_2NH_2 + CS_2 \longrightarrow HOCH_2CH_2NH_2CS_2$

(4) $HOCH_2CH_2NH_2 + COS \longrightarrow HOCH_2CH_2NH_2COS$

Only reactions 1 and 2 are reversible. The absorption process is essentially insensitive to the partial pressures of acid gases. Removal efficiencies have been found to be approximately 99.6 percent for H_2S and 88 percent for CO_2.

The MEA absorbent is regenerated by thermal decomposition at elevated temperatures. Only H_2S, CO_2, and NH_3 can be desorbed in this manner, with CS_2 and COS forming nonregenerable compounds with the amine. Off gas from the amine regenerator, containing most of the H_2S, CO_2, and NH_3, is sent to sulfur recovery.

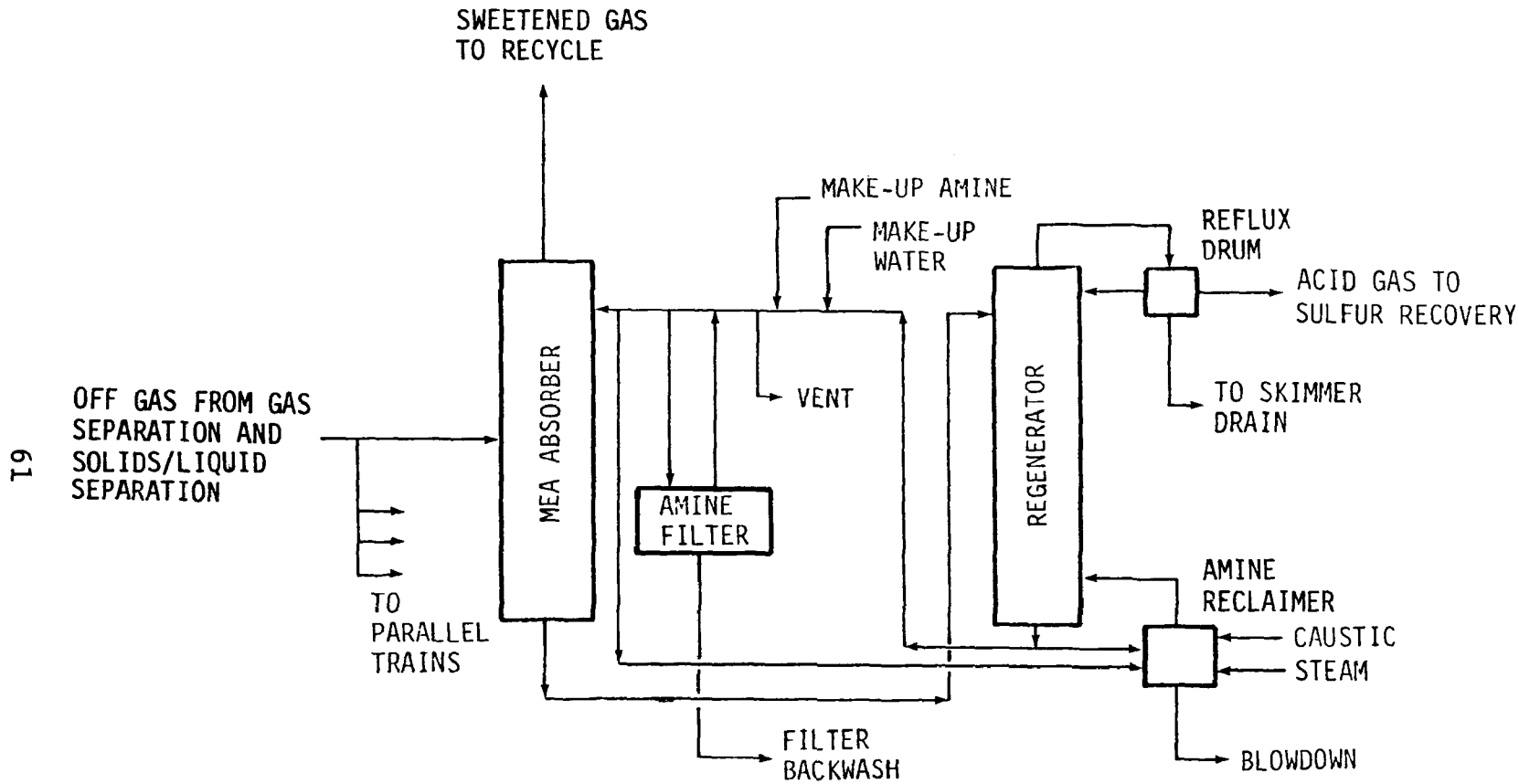

Figure 10. Synthoil process flow diagram - acid gas removal process (27)

The nonregenerable organic complexes are removed by a purge stream from the reclaimer. Caustic added to the reclaimer to precipitate metals also forms non-volatile salts with the amine complexes which are discharged as blowdown. Pure MEA is distilled off the reclaimer and recycled to the regeneration unit.

Process and Waste Streams--

Process and waste streams entering and leaving the acid gas removal process are shown in Figure 11. Stream constituents are quantified in Table 28.

The major wastewater stream is the blowdown from the amine regenerator. An intermittent wastewater stream is backwash from the amine filter in the acid gas removal unit. Frequency of backwash will depend on the flow rate and solids content of the amine stream. Accidental spills will also be a source of intermittent wastewater generation.

Wastewater from gas purification will contain substantial amounts of dissolved and suspended hydrocarbons, monoethanolamine, suspended solids, sodium salts of monoethanolamine and carbon disulfide or carbonyl sulfide compounds, metals, ammonia, and other minor constituents. Large quantities of caustic, ammonia, and amine will result in an alkaline wastewater.

Atmospheric emissions will consist of gas leakage from sumps and storage vents, and fugitive emissions during maintenance operations. The nature of the emission will depend on the source of leak; therefore, no attempt has been made to quantify specific constituents. All volatile constituents appearing in Table 28 are potential atmospheric contaminants.

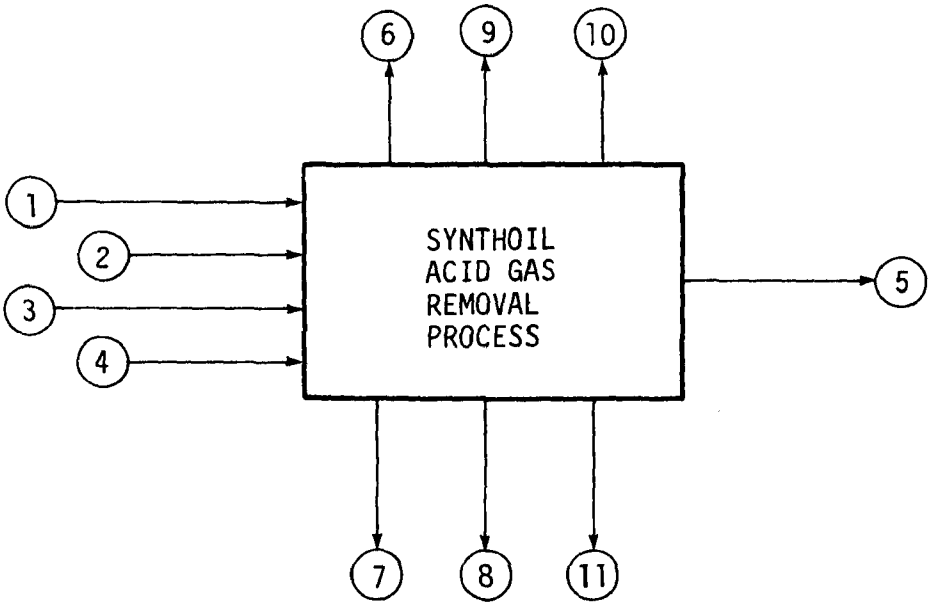

	STREAM	METRIC TONS PER DAY
1.	GAS TO PURIFICATION	12,301.8
2.	MAKEUP WATER	7.3
3.	ADDITIVES	2.0
4.	STEAM	NOT QUANTIFIED
5.	ACID GAS	1,682.9
6.	PURIFIED RECYCLE GAS	10,639
7.	PURGE	9.0
8.	FILTER BACKWASH WATER	NOT QUANTIFIED
9.	VENT GASES	NOT QUANTIFIED
10.	VAPOR LEAKAGES	NOT QUANTIFIABLE
11.	TRANSIENT SPILLS	NOT QUANTIFIABLE

Figure 11. Synthoil acid gas removal process and waste streams

TABLE 28. SYNTHOIL ACID GAS REMOVAL PROCESS AND WASTE STREAMS (EXTRACTED FROM TABLE 15)

Stream*	Metric tons per day
1. Gas to purification (combined streams - gas separation and from solids separation)	
H_2O	10.2
H_2	4,910
H_2S	613
NH_3	6.6
CO	291
CO_2	994
Hydrocarbons	5,212
Oil (light & vapor)	265
	12,301.8
2. Make-up water to amine system	7.3
3. Additives to amine system	
Monoethanolamine (MEA)	1.3
Polyrad 1110 A (corrosion inhibitor)	0.006
Oleyl alcohol (anti-foam)	0.02
Sodium hydroxide	0.6
	1.926
5. Acid gas to sulfur recovery	
H_2S	612
NH_3	6.6
H_2O	2.4
Hydrocarbons	72
CO	0.9
CO_2	989
	1,682.9
6. Purified gas (recycle)	
H_2O	8.2
H_2	4,910
Hydrocarbons	5,171
CO	290
CO_2	5.6
Oil (light & vapors)	254
	10,638.8
7. Purge from amine regenerator	
H_2O	7.3
Sulfates	0.3
Monoethanolamine	0.7
NaOH	0.7
	9.0

*Refer to Figure 11.

SECTION 4

THE H-COAL PROCESS

INTRODUCTION

The H-Coal process is a catalytic hydroliquefaction process developed by Hydrocarbon Research, Inc. (HRI), for converting coal to liquids and fuel gas. The feasibility of the process has been demonstrated on two 11 to 45-kg per day bench-scale units and on a 2.7-metric ton per day PDU. Thus far, research has indicated that the process can produce a synthetic crude which can be further refined to gasoline and furnace oils by conventional methods. This mode avoids the troublesome operation of filters and centrifuges by using vacuum distillation for product recovery. Alternatively, the process can produce a fuel oil with 0.5 percent sulfur, naphtha with less than 0.2 percent sulfur, and a fuel gas. While the latter mode of operation uses less severe operating conditions and a significantly reduced hydrogen consumption, it has proven more costly because of the need to remove unconverted coal and ash from the residuum and heavy oil via centrifugation. Depending upon the feed coal type and process operating conditions, the process may convert up to 96 percent of the organic matter in coal to gaseous and liquid products (34).

Fourteen coal types have been tried up to this point, and all have been satisfactorily converted by the H-Coal

process. The coal types examined include eastern, midwestern, and western bituminous coals; western subbituminous coals; lignites from Texas and North Dakota; and brown coal from Australia. The total experience with processing these coal types, in bench-scale and PDUs, over the past twelve years, represents more than seven years of cumulative process development experience (34).

The H-Coal process is now undergoing its next stage of development, a pilot plant to be constructed in Catlettsburg, Kentucky. This plant will be capable of processing a nominal 544 metric tons per day of coal with an output of some 1,289 m^3/day of fuel oil or 181 metric tons per day for 112 m^3/day of synthetic crude. Phase I or "design" of the H-Coal facility is essentially complete at this time. The "construction" phase is underway. It is anticipated that construction will be completed in 1978 and that the plant will operate until 1980. Design and construction funding is shared by the Department of Energy and participating industrial organizations.

PROCESS DESCRIPTION

Overall Process and Operating Conditions

The commercial H-Coal facility described in this report is a hypothetical plant designed to produce a nominal 7,950 m^3/day of liquid product by the fuel oil mode of operation, in which severity is increased no further than that needed to liquefy the coal with a minimum of hydrogen.

An overall process flow schematic is depicted in Figure 12. It shows the interconnections between the various modules.

For the H-Coal process, coal is first dried to less than 2 percent moisture and ground to less than 20 mesh. The dry pulverized coal is then mixed with a slurrying oil containing a solids-liquid slurry recycle and a distillate recycle stream. The weight ratio of coal to slurry oil is about 1:2.

The coal is hydrogenated in an ebullated bed catalytic reactor at a pressure of 20.7 MPa and a temperature of 450°C. Internal mixing is provided to maintain the catalyst in an ebullated state.

Material Balances

The material balances for this report were based on a dry, pulverized coal input of 17,347 metric tons per day of Illinois No. 6 coal. The coal was assumed to have the following ultimate analysis.

Component	Ultimate analysis weight - percent
C	71.0
H	5.2
N	1.0
O	9.0
S	4.5
Ash	9.3

It was assumed that 91 percent of the organic matter in coal was converted into liquid and gaseous products. Bench-scale and PDU operations have shown that conversion may be as high as 96 percent.

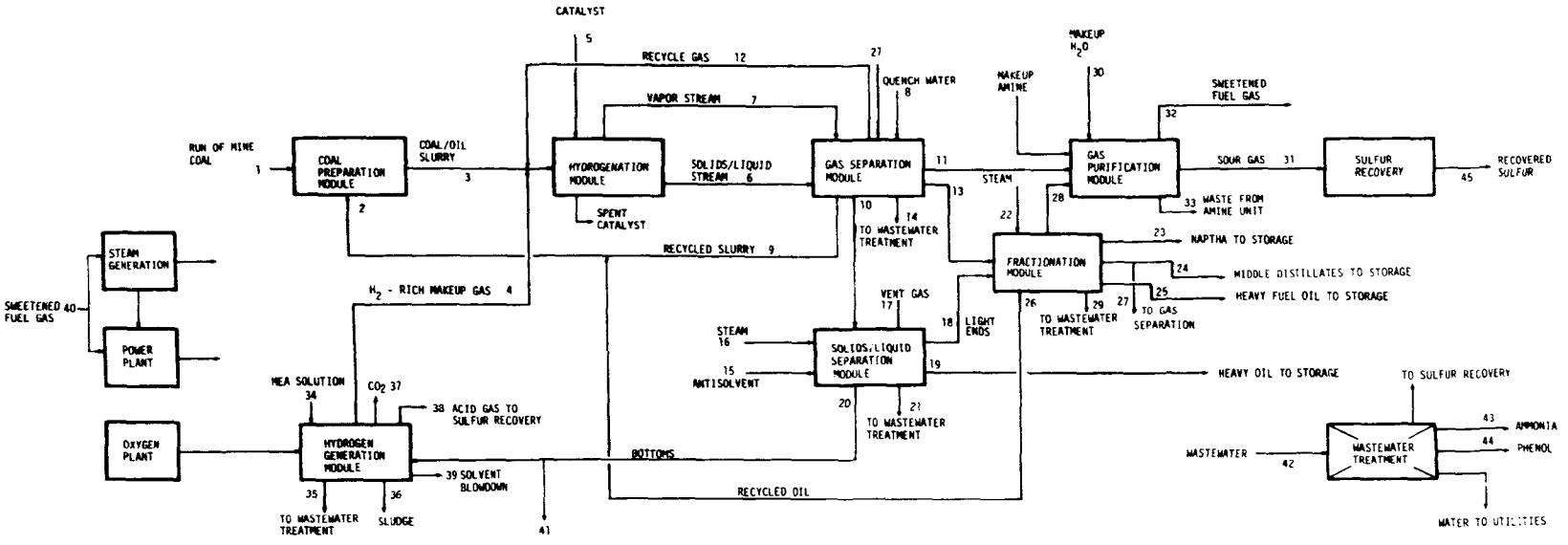

Figure 12. Overall process flow schematic for a conceptual H-coal plant operating in the fuel oil mode (35)

The H-Coal commercial evaluation prepared by Fluor Engineers (35) was used extensively in preparation of the mass balances for this report. In addition, data presented by Johnson et al. (34), Kang and Kydd (36), and OCR (37) from bench-scale and PDU studies were utilized.

Table 29 gives the quantities in tons per day of various components to be found in input, process and discharge streams for a conceptualized 7,950 m^3/day H-Coal process. The stream numbers correspond to the process streams depicted in Figure 12.

The data in Table 29 cover those streams which are generated in the process modules and in by-product recovery. Waste and process streams generated in auxiliary facilities are quantified in Section 7 and are also enumerated in Figure 12. Available data did not permit quantification of particulates which are emitted from the process gas streams. Organics that are discharged in sour water effluents could not be characterized from available data with much certainty. This area is further addressed in Section 8.

Material and Thermal Efficiency

The overall material and utility balance is depicted in Table 30. Coal, oxygen, and water are the only raw materials required in the process for the conversion of coal to liquid products. Fuel gases produced in the process together with a portion of the heavy oils and solids are adequate to supply all the energy demands of the system except for the start-up; natural gas or LPG may be needed then. Makeup water is the only utility which will be required from an outside source.

TABLE 29. MATERIAL INVENTORY FOR THE H-COAL PROCESS (33)*

Stream description	Feed coal	Recycled slurry	Coal/oil slurry	Makeup gas	Catalyst added	Solids-liquid slurry	Reactor vapors	Quench H_2O	Solids-liquid to recycle	Solids-liquid to separation	Acid gas	Recycle gas
Number*	1	2	3	4	5	6	7	8	9	10	11	12
Composition												
H_2				631.4		186.9	795.8				146.0	836.0
N_2				29.0		6.4	52.2				17.2	41.3
CO				631.4		122.5	643.6				257.4	507.2
CO_2		1.5	1.5	142.9		156.0	468.8		1.5	0.7	386.6	109.4
H_2S		2.4	2.4	0.5		110.7	616.0		1.4	0.7	459.5	42.5
NH_3						23.6	80.7		Trace	0.1	0.4	
$C_1 - C_3$ gas						671.3	1,737.3				1,321.01	999.9
H_2O						384.6	1,214.7	1,563.2	0.2	1.7	18.4	3.2
C_4		2.1	2.1			84.4	204.1		2.1	0.8	133.5	23.0
C_5 - 205°C***		164.4	164.4			863.4	708.0		164.2	57.6	0.8	1.8
204-260°C***		866.8	866.8			789.3	417.8		447.4	146.5		
260-525°C***		23,914.0	23,914.0			24,942.0	4,881.7		13,694.0	5,488.6		
Above 525°C		8,207.7	8,207.7			11,481.6			8,207.7	3,273.6		
Ash		1,536.9	1,536.9			3,006.3			1,445.1	1,561.2		
Unreacted Coal	17,400	1,145.8	18,493.2			2,537.6			1,236.5	1,301.1		
Other					8.5							
Total	17,400	35,841.6	53,189.0	1,435.2	8.5	45,366.6	11,820.7	1,563.2	25,200.1	11,832.6	2,729.31	2,574.3

* Based on a production rate of 7,950 m^3 of fuel oil per day, all values are in metric tons/day.
** Refers to Figure 12.
***Denotes boiling point upper range for product mix.

(continued)

TABLE 29 (continued)

Stream description	Product oil to fractionation	Sour H_2O	Makeup antisolvent	Steam	Vent gas	Light ends to fractionation	Heavy oil to storage	Heavy bottoms	Waste water	Steam	Naphtha to storage	Middle distillates to storage	Heavy Fuel oil to storage
Number*	13	14	15	16	17	18	19	20	21	22	23	24	25
Composition													
H_2	0.7												
CO	1.5												
CO_2	8.3	118.4			0.6	0.1					0.1	0.2	
H_2S	48.1	174.5			0.5	0.2					0.5	0.2	
NH_3	0.18	103.7			0.1								
C_1 - C_3 gas	88.0												
H_2O	2.3	3,136.9		638.7	0.1	1.1			639.3	383.0			
C_4	139.5				0.6	0.2					53.9		
C_5 - 205°C	1,336.2	11.5				57.2	0.3		1.0		1,378.8	3.9	
204-260°C	609.8	3.1				141.1	4.4		1.0		85.9	384.6	93.0
260-525°C	10,638.4	2.7				1,626.3	2,489.2	1,371.0	1.1				1,753.1
Above 525°C							1,840.4	1,433.0	0.3				
Ash							4.3	1,556.9					
Unreacted Coal							2.9	1,298.2					
Other			44.5 (Decane)			16.7 (Decane)	0.3 (Decane)	27.5 (Decane)			16.5 (Decane)	0.2 (Decane)	
Total	12,873.98	3,550.8	44.5	638.7	1.9	1,842.9	4,341.8	5,686.6	642.7	383.0	1,535.7	389.1	1,846.1

(continued)

TABLE 29 (continued)

Stream description	Recycle oil	Makeup oil to gas separation	Acid gas	Sour H_2O	Makeup water	Sour gas to sulfur recovery	Sweetened fuel gas	Waste from amine unit	MEA solution
Number*	26	27	28	29	30	31	32	33	34
Composition									
H_2			0.7				146.7		
N_2							17.2		
CO			1.5				258.8		
CO_2			8.1	0.1		374.9	17.4		
H_2S			47.3	0.4		504.7	1.8		
NH_3			0.2			0.5			
C_1 - C_3 gas			87.7			20.0	1,388.4		
H_2O			4.5	381.5	2.9	8.6	17.3	3.4	
C_4			75.4				198.5		
C_5 - 205°C				0.8					
204 - 260°C	198.8			0.5					
260 - 525°C	10,441.8	77.7		1.2					
Other								0.8 (Mea, Polyrad)	0.9 (Mea, Polyrad)
Total	10,640.6	77.7	225.4	384.5	2.9	908.7	2,046.1	4.2	0.9

(continued)

TABLE 29 (continued)

Stream description	Sour water	Sludge from clarifier	CO_2 from acid gas removal	Acid gas to sulfur recovery	Solvent blowdown	Fuel gas to utilities	Excess bottoms not sent to gasifier	Water to wastewater treatment	Ammonia recovered	Phenol recovered	Sulfur recovered
Number*	35	36	37	38	39	40	41	42	43	44	45
Composition											
H_2						145.6					
N_2/Argon				50.5		17.1					
CO						256.7					
CO_2			1,048.7	8,738.9		17.3		118.5			
H_2S				139.5		1.8		174.9			
NH_3				1.0				103.7	103.6		
C_1 - C_3 gas						1,378.9					
H_2O	1,203.8	772.9				17.2		5,631.5			
C_4						197.2					
C_5 - 205°C								13.3			
204 - 260°C								4.9			
260 - 525°C							340.9	5.0			
Above 525°C							336.0	0.3			
Ash/slag							393.9				
Unreacted Coal		1,159.4		5.4			320.1				
Other				2.3 (SO_2, NO, HCN)	5.0					20.7 (Phenol)	1,639.6 (Sulfur)
Total	1,203.8	1,932.3	1,048.7	8,937.6	5.0	2,031.8	1,390.9	6,052.1	103.6	20.7	1,639.6

TABLE 30. OVERALL MATERIAL BALANCE FOR THE H-COAL PROCESS (EXTRACTED FROM TABLE 29)

Inputs		Outputs	
Material	Metric tons/day	Material*	Metric tons/day
Coal to reactor	17,400	Heavy oil (39,176.0 bbd)	6,598
Oxygen to gasifier	3,552	Naphtha (10,834.0 bbd)	1,540
Water to process	2,593	Fuel gas for export	14.2
Water to utilities	24,984	Treated wastewater	5,361.5
Total	48,529	Water from blowdown	1,701.0
		Sludge from hydrogen production	1,932.3
		Heavy bottoms not used in gasifier	1,444.2
		Phenols	20.7
		Sulfur	639.6
		Ammonia	103.6
		Waste gas**	28,707.9
		Clarifier overflow	419.1
		Miscellaneous wastes	45.9
		Total	48,528.0

* Output materials include 91.5 metric tons/day of fuel gas of which 77.3 tons/day are used for power and steam generation.

**Waste gas included evaporation and drift from the cooling tower, tail gases, vent streams, etc.

Process Material Yields--

Utilizing the data in Table 30, material yields of the process can be calculated. The yield of heavy oil in unit weight per unit weight of coal is 6,598/17,400 = 0.38. If

Overall Thermal Efficiency--

The overall thermal efficiency permits an estimate of the overall heat utilization as the result of the process and required auxiliary operations. Conceptual designs for a commercial facility indicate that the plant will be completely self-sufficient, including all utilities except makeup water. The overall thermal efficiency is defined as:

$$\frac{\text{The heating values of the products + the heating values of the combustible by-products (joules)}}{\text{The heating values of all raw materials consumed by the process and auxiliary facilities (joules)}}$$

$$= \frac{0.74 + 62.0 + 270.3\ (TJ)}{477.6\ (TJ)} \times 100 = 70\%$$

Nearly all of the fuel gas produced in the process is utilized by the plant for fuel gas and electricity production. Only 0.74 MJ of fuel gas is considered a product or by-product.

DESCRIPTION OF THE PROCESS MODULES

The following modules and processes are considered to be inherent to the H-Coal process:

- Hydrogenation
- Gas Separation
- Solids Separation
- Fractionation

- Auxiliaries include coal preparation; acid gas removal; the generation of hydrogen, oxygen, steam and electric power; raw water treatment; product storage; solid, liquid, and gaseous waste treatment; cooling towers; by-product recovery; and sulfur recovery.

Auxiliaries are discussed in Sections 6 and 7.

The operating units in each module are based upon a conceptualized design. Undoubtedly some units will be modified before the commercial facility is completed as a result of new methods for improving process efficiency and pollution control.

Coal Hydrogenation

Module Description--

Figure 13 is a flow diagram of the H-Coal hydrogenation module. Coal hydrogenation for a 7,950 m^3/day H-Coal facility requires a total of six parallel reactors, each with its own feed heater and hydrogen heater for independent temperature control (35).

In the H-Coal process, the coal-oil slurry resulting from coal preparation is brought to reactor pressure and mixed with a portion of the makeup hydrogen. The slurry is then preheated and charged with the required hydrogen to each reactor. Hydrogenation is accomplished in an ebullated bed reactor using a cobalt-molybdate catalyst. The operating conditions are a pressure of 20.68 MPa and a temperature of 454°C. The reaction zone temperature can be kept nearly constant by controlling the temperatures of the incoming streams, which may be 66-93°C lower than the temperature in the reactors. At these conditions, more than 90 percent of

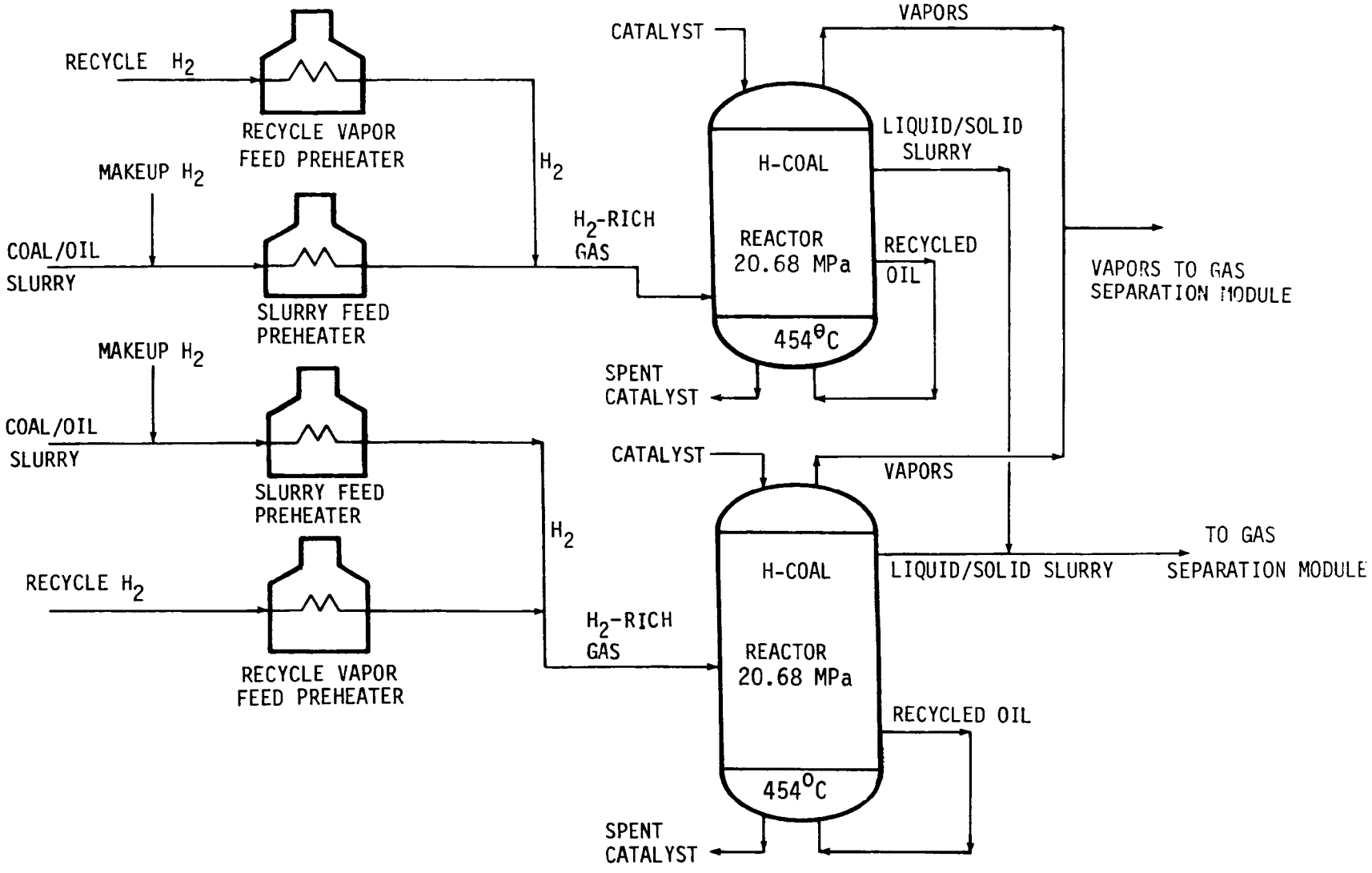

Figure 13. H-Coal process flow diagram - hydrogenation module (35)

naphtha is included the yield is (6,598 + 1,540)/17,400 = 0.47.

Process Thermal Efficiency--

The thermal efficiency* serves as a means of measuring the effectiveness of the process for making clean fuels from coal. The process thermal efficiency is defined as:

$$\frac{\text{The heating value of all clean products (joules)}}{\text{The heating value of coal to the reactor + the heating (joules) value of the makeup gas}}$$

$$= \frac{106.6 + 69.1 + 277.6\ (TJ)}{477.6 + 93.6\ (TJ)} \times 100 = 79\%$$

The data in Table 31 indicate the heating values for products and materials used in the H-coal process.

TABLE 31. HEATING VALUE OF PRODUCTS AND MATERIALS UTILIZED IN THE H-COAL PROCESS (35)

Input	Metric tons/day**	MJ/kg	TJ/day
Dry coal to reactor	17,400	27.45	477.6
Fuel gas for power and steam generation	2,032	51.98	105.6
Make-up gas from gasifier	1,440	64.97	93.6
Output			
Fuel gas***	2,046.1	51.98	106.6
Naphtha	1,541	44.88	69.1
Heavy fuel oil	6,598	42.08	277.6

* This calculation is a first law thermodynamics efficiency. It considers only heat quantity values.
** From Table 29.
***Only 0.74 TJ/day of fuel gas are exported. The process fuel gas is used for steam and power generation.

the carbon in coal is converted to liquid and gaseous products. A detailed picture of the ebullated bed reactor is shown in Figure 14.

The hydraulics of the reactor are such that the catalyst bed occupies a well-defined portion of the reactor at the base, above which a catalyst-free zone of liquids, solids, and gases exists. As a result it is possible to remove and add catalyst without shutting down the reactor.

Two separate outlet streams discharge from the hydrogenation module to the gas separation module, as is shown in Table 32. The compositions of the vapor stream and the liquid/solids slurry leaving the reactor are quantified in Table 29 as streams 7 and 6, respectively.

TABLE 32. COMPOSITION BY WEIGHT PERCENT OF A TYPICAL FUEL GAS UTILIZED IN THE H-COAL PROCESS (35)

Fuel gas produced in acid gas removal process	
H_2	7.2% (by weight)
N_2	0.8
CO	12.6
CO_2	1.0
H_2S	0.1
Hydrocarbons	77.5
H_2O	0.8
	100%
Typical flue gas discharged from process heaters	
N_2	75.7% (by weight)
H_2O	6.9
O_2	5.2
CO_2	12.2
SO_2	0.007
NO_x	Trace
	100%

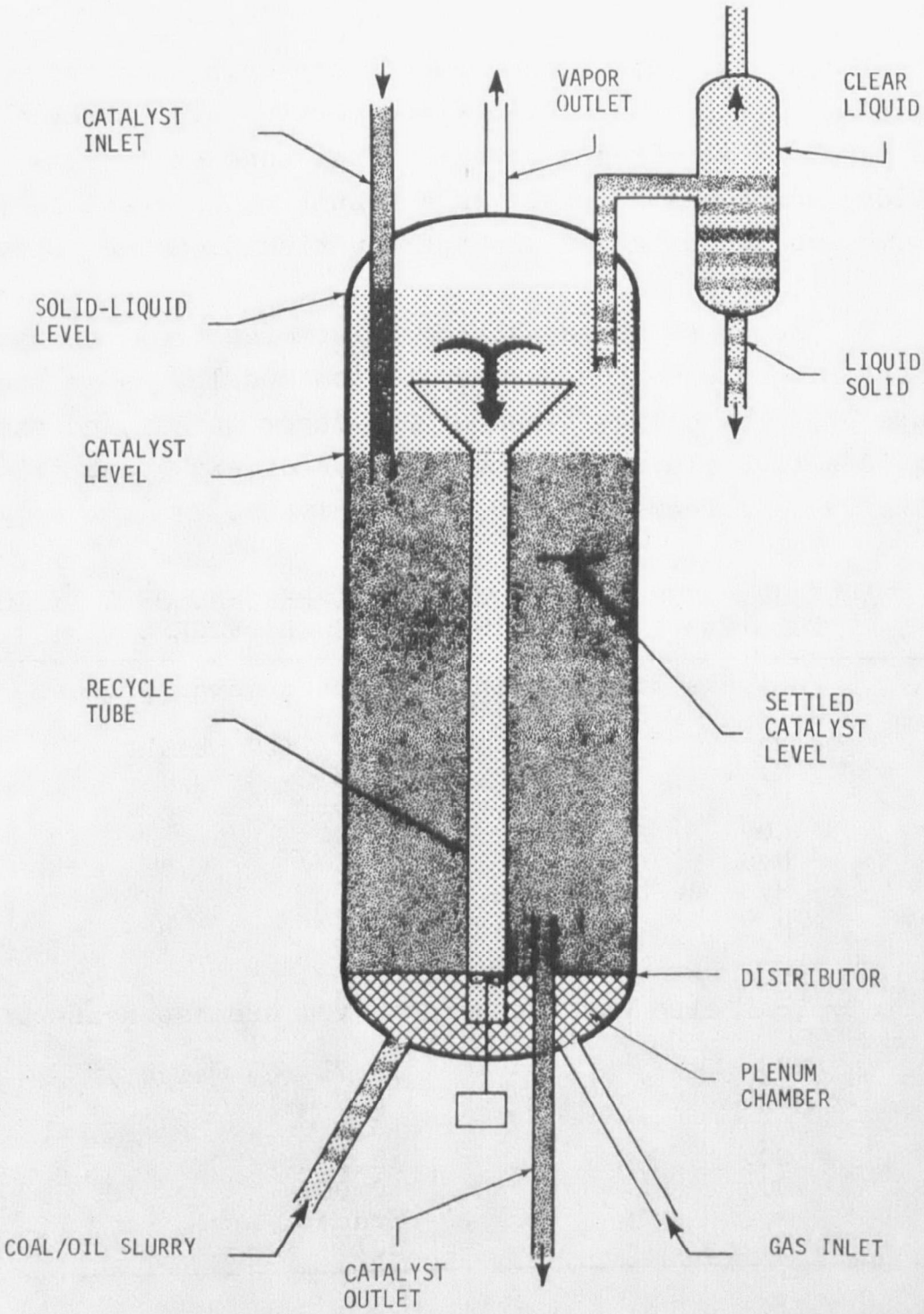

Figure 14. H-Coal reactor (36)

The vapor stream contains a large percentage of the light hydrocarbons, hydrogen sulfide, ammonia, carbon monoxide, carbon dioxide, and water vapor. This stream leaves the top of the reactor, essentially devoid of solids and heavy oils. The solids-liquid slurry contains the unconverted coal and the ash. It passes up through the catalyst bed and also leaves the top of the reactor.

Process and Waste Streams--

Modular influent and effluent streams are shown in Figure 15. Most of the hydrocarbons which make up the gaseous and liquid products are formed in this module. Potential pollutants may be converted to other forms that are suitable for removal. Only one continuous waste stream, the flue gas from the preheaters, is discharged from the hydrogenation module. There is also the possibility of hydrocarbon vapor leakage from the reactor and transient spills. It is noted in Table 33 that the fuel gas utilized is the sweetened fuel gas produced in the gas purification module. A typical flue gas is also depicted. The weight percent of the various components found in the fuel gas and flue gas is quantified. Table 33 gives the process and waste stream constituents for the hydrogenation module.

While the catalyst is not discharged continuously, it is replaced at the rate of 8.48 metric tons per day. This is in agreement with bench-scale studies, which have shown that greater than 1,043 kilograms of coal per kilogram of catalyst can be processed without affecting process efficiency or quality of the product (36). The characteristics of the cobalt-molybdate catalyst are listed in Table 34. Analyses of spent catalyst indicate that some metallic contaminants are deposited on the catalyst. Whether such contaminants adversely affect the process is questionable (36).

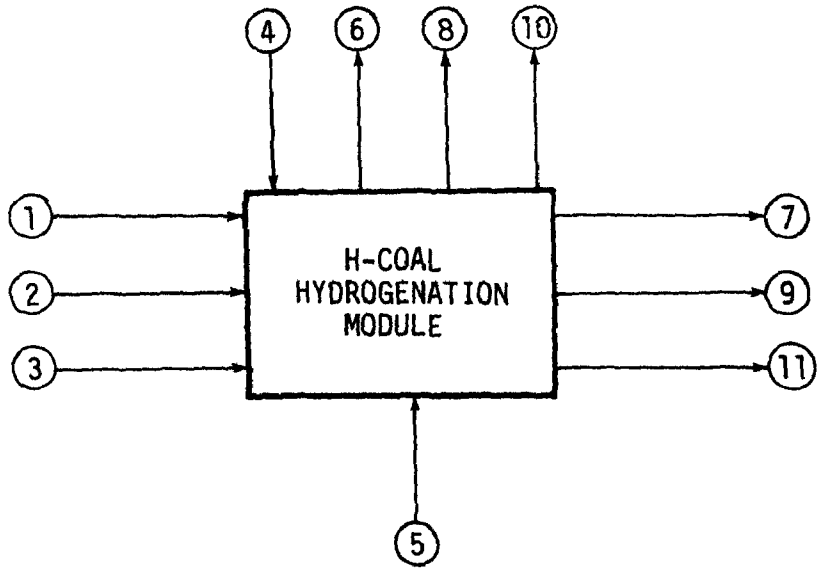

	STREAM	METRIC TONS PER DAY
1.	COAL/OIL SLURRY	53,187.7
2.	CATALYST	8.5
3.	SYNTHESIS GAS FROM HYDROGEN PRODUCTION	1,435.2
4.	RECYCLED H_2 RICH GAS	2,564.3
5.	FUEL GAS AND AIR	421.8 + 7,770.3
6.	REACTOR VAPORS	11,820.6
7.	REACTOR SOLIDS/LIQUID SLURRY	45,366.4
8.	FLUE GAS	8,192.1
9.	SPENT CATALYST	8.5
10.	VAPOR LEAKAGE	NOT QUANTIFIABLE
11.	TRANSIENT SPILLS	NOT QUANTIFIABLE

Figure 15. H-Coal hydrogenation module process and waste streams

TABLE 33. H-COAL HYDROGENATION MODULE PROCESS AND WASTE STREAMS (EXTRACTED FROM TABLE 29)

Stream No.*		Metric tons per day
6	Reactor vapor stream	
	H_2	795.8
	N_2	52.2
	CO	643.6
	CO_2	468.8
	H_2S	616.0
	NH_3	80.7
	H_2O	1,214.7
	Hydrocarbons	7,948.8
	Solids	0.0
		11,820.6
7	Reactor solid-liquid slurry	
	H_2	186.9
	N_2	6.4
	CO	122.5
	CO_2	156.0
	H_2S	110.7
	NH_3	23.6
	H_2O	384.6
	Hydrocarbons	38,831.9
	Solids	5,543.9
		45,366.4
9	Spent catalyst	
	Cobalt-molybdate catalyst	8.48

*Stream numbers correspond to those numbers in Figure 15. Streams 1 through 5 are input streams. They are not quantified in this table, but may be found in Table 29.

TABLE 34. CATALYST CHARACTERISTICS (37)

Physical properties of fresh catalyst	1.6 mm diameter extrudates
	12.7 mm maximum length
	15% MoO_3
	3% CoO on alumina
	(SiO_2 on alumina may also be present)
Composition of spent catalyst	Spectrographic composition range from benzene washed sample
Al, Ti	10 - 100%*
Mo, Fe, B, Co	1 - 10%
V, Si, Ca	0.1 - 1%
Ni, Cr, Mg, Sn	0.01 - 0.1%
Cu, Mn, Ag, Zn	0.01%

*Alumina levels between 10 and 100 percent would be expected insofar as the catalyst is alumina based; this is not a contaminant from the coal. Likewise, cobalt, molybdate, and silica are components of the catalyst, and not contaminants.

Gas Separation Module

Module Description--

The gas separation module is shown in Figure 16. The feed streams to the gas separation module include both the vapor stream from the reactor and the solids-liquid slurry from the reactor. The gas separation module then separates fuel gas from the reaction mixture. Gas separation also provides a hydrogen-rich stream for recycle to the reactor. This module also yields a solids-free oil for fractionation, the slurry stream for recycle back to the reactor, and the

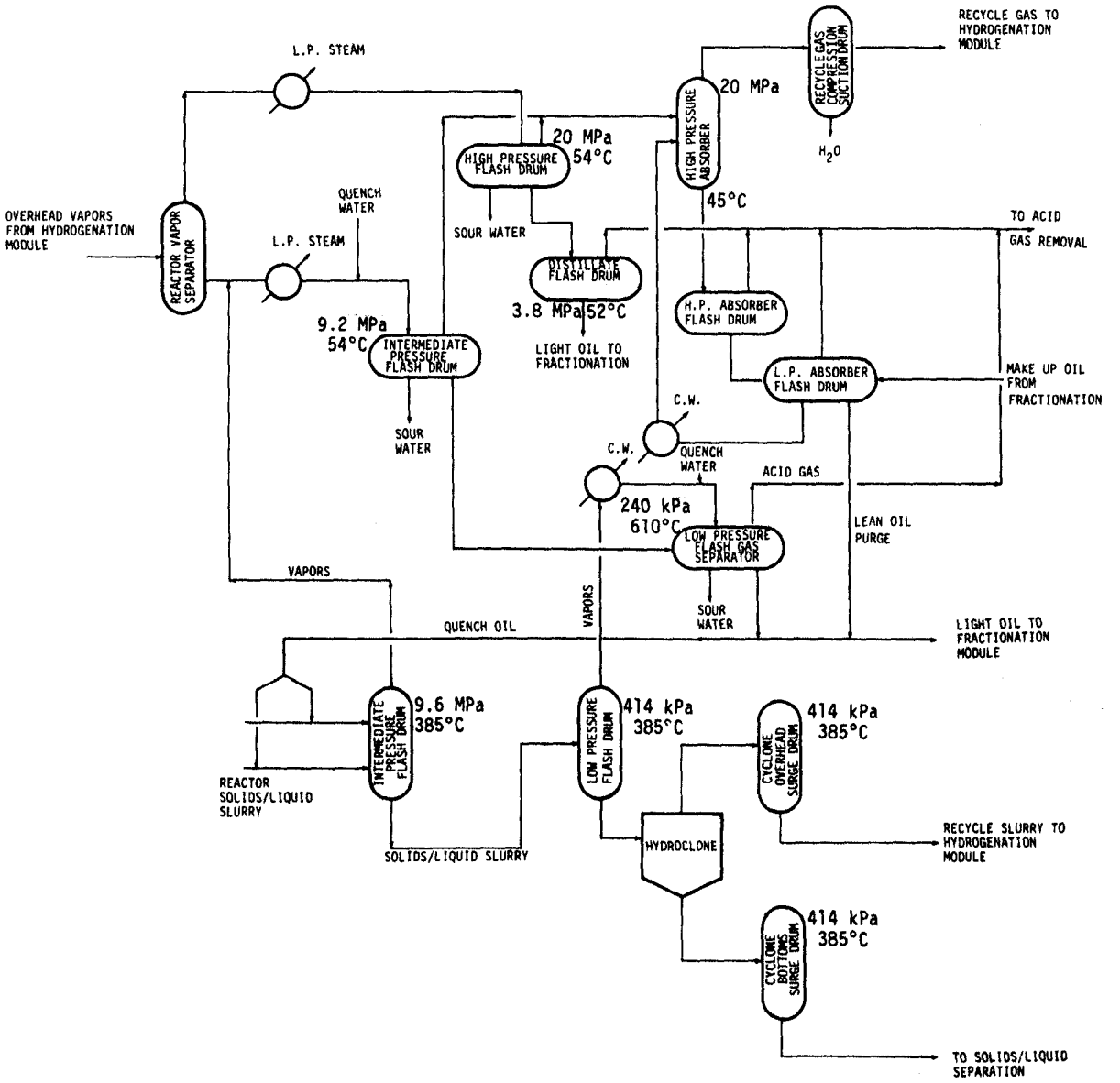

Figure 16. H-Coal process flow diagram - gas separation module (35)

slurry stream which contains the net unreacted coal and ash. The latter is sent to the solids-liquid separation module. The gases from the high pressure absorber flash drum, the low pressure absorber flash drum, the low pressure flash gas separator, and the distillate flash drum are all diverted to the gas purification module for cleanup.

The solids-liquid slurry leaving the low pressure flash drum is fed to a series of hydroclones to concentrate the solids. Hydroclone overhead is recycled back to the reactor in order to maintain a specified concentration of residuum (524^{+}°C) material in the reactor effluent. The overhead is substantially reduced in solids. Bench-scale data has served as the basis for obtaining the desired quantity of residuum to be recycled. By reducing the quantity of distillates recycled and utilizing the heavy residuum recycle stream, the yield of residuum produced in the reactor is decreased (36). The ratio of residuum to distillates in the recycle slurry is determined by the need for a low residuum yield without a high solids buildup in the reactor, which could cause unstable operating conditions. Hydroclone bottoms are sent to the solids-liquid separation module.

Quench water used in the flash drums emerges as sour water streams bearing ammonia and hydrogen sulfide.

Process and Waste Streams--

The process and waste streams from the gas separation module are denoted in Figure 17. Constituents of the process and waste streams of the gas separation module are shown in Table 35. The process streams from this module include three recycle streams: the hydrogen-rich stream recycled to the reactor, the hydroclone overhead slurry recycled to the slurry mix tank, and a quench slurry entering the phase separation module. The acid gas streams

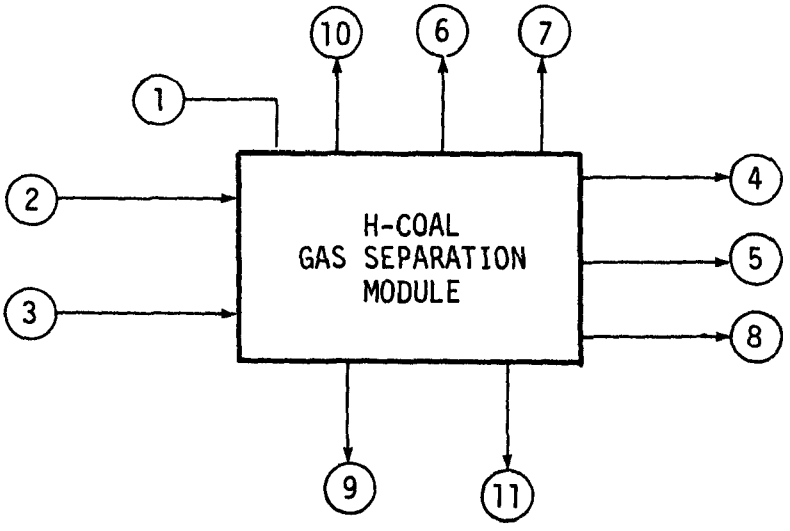

	STREAM	METRIC TONS PER DAY
1.	REACTOR VAPORS	11,820.6
2.	REACTOR SOLIDS-LIQUID SLURRY	45,366.4
3.	QUENCH WATER	1,563.2
4.	SOLIDS-LIQUID TO RECYCLE	25,199.98
5.	SOLIDS-LIQUID TO SOLIDS SEPARATION MODULE	11,832.69
6.	ACID GAS TO GAS PURIFICATION MODULE	2,711.26
7.	H_2 RICH GAS TO RECYCLE	2,564.3
8.	PRODUCT TO FRACTIONATION	12,872.98
9.	SOUR WATER	3,551.1
10.	VAPOR LEAKAGE	NOT QUANTIFIABLE
11.	TRANSIENT SPILLS	NOT QUANTIFIABLE

Figure 17. H-Coal gas separation module process and waste streams

TABLE 35. H-COAL GAS SEPARATION MODULE
PROCESS AND WASTE STREAMS (EXTRACTED FROM TABLE 29)

Stream*		Metric tons per day
4	Solids-liquid recycle stream	
	CO_2	1.5
	H_2S	1.4
	H_2O	0.18
	Hydrocarbons	22,515.3
	Solids	2,681.6
		25,199.98
5	Solids-liquid slurry to solids separation module	
	CO_2	0.7
	H_2S	0.7
	NH_3	0.09
	H_2O	1.7
	Hydrocarbons	8,967.2
	Solids	2,862.3
		11,832.69
6	Acid gas to gas purification module	
	H_2	146.0
	N_2	17.2
	CO	257.4
	CO_2	368.6
	H_2S	459.5
	NH_3	0.36
	H_2O	18.4
	Hydrocarbons	1,443.8
		2,711.26

(continued)

TABLE 35 (continued)

Stream*		Metric tons per day
7	H_2-Rich gas to recycle	
	H_2	836.0
	N_2	41.3
	CO	507.2
	CO_2	109.4
	H_2S	42.5
	NH_3	999.9
	H_2O	3.2
	Hydrocarbons	24.8
		2,564.3
8	Product oil to fractionation	
	H_2	0.7
	CO	1.5
	CO_2	8.3
	H_2S	48.1
	NH_3	0.18
	H_2O	2.3
	Hydrocarbons	12,811.9
		12,872.98
9	Sour water	
	CO_2	118.4
	H_2S	174.5
	NH_3	103.7
	H_2O	3,136.9
	Hydrocarbons	17.6
		3,551.1

*Stream numbers correspond to number in Figure 17, Streams 1 through 3 are input stream to the module and consequently are not included in this table. They may be found in Table 29.

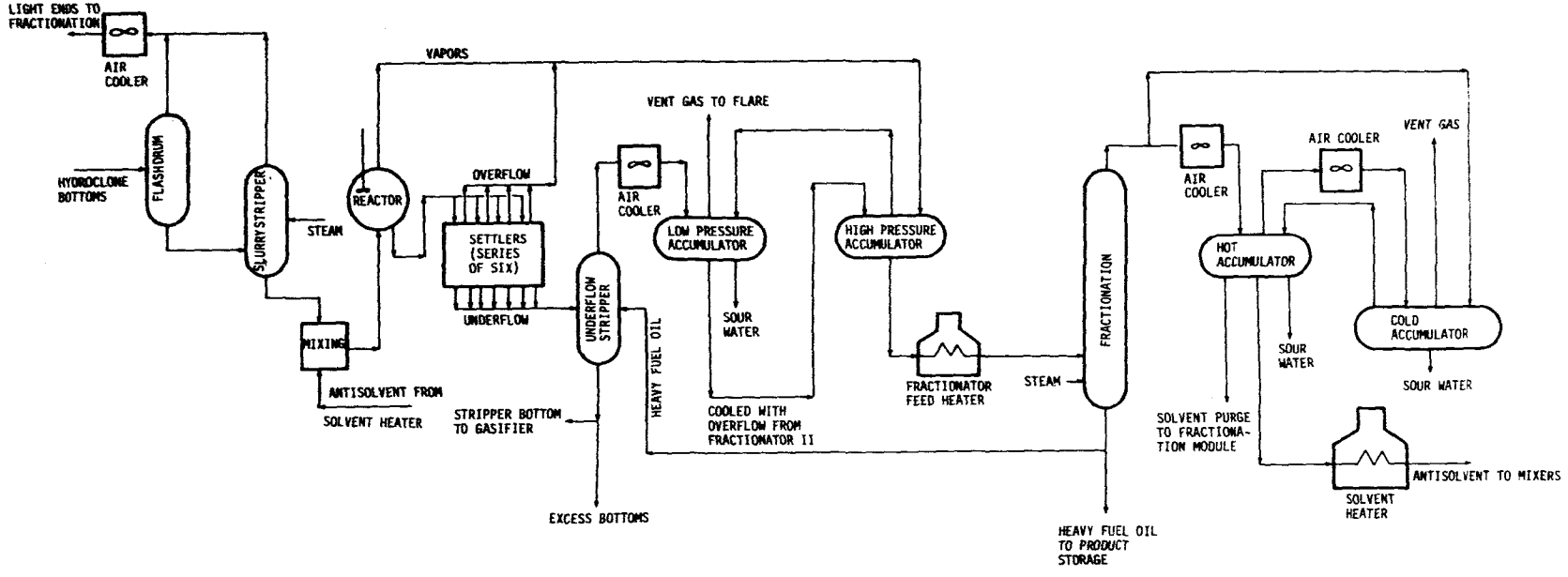

Figure 18. H-coal process flow diagram -solids separation module (35)

and the sour water streams are laden with contaminants and are sent to the gas purification module and to wastewater treatment, respectively. Other process streams include: hydroclone bottoms to solids-liquid separation and a product oil stream routed to fractionation. Two additional transient sources of emissions from this module are hydrocarbon vapor leakage and accidental spills.

Solids Separation Module

Module Description--

The solids separation module is designed to recover the heavy hydrocarbon fractions from the unreacted coal and ash. Feed to this module is the underflow from hydrocloning. The module flow diagram is shown in Figure 18. Equipment in this area consists of flash drums, pumps, stripping and fractionating columns, accumulators, air cooled heat exchangers, direct-fired heaters, reactors and settlers.

Process and Waste Streams-

The input-output diagram for the solids separation module is shown in Figure 19. The resultant liquid streams from this module include the heavy product oil, the anti-solvent which is largely recovered for recycling, and a small naphtha stream sent to the fractionation module. The vent gas from the low pressure accumulator is flared. Process and waste stream constituents are given in Table 36.

The sour water stream generated in this module contains only trace quantities of ammonia and hydrogen sulfide. It also contains an unquantified amount of emulsified oils. Consequently, the COD of this waste stream cannot be specified.

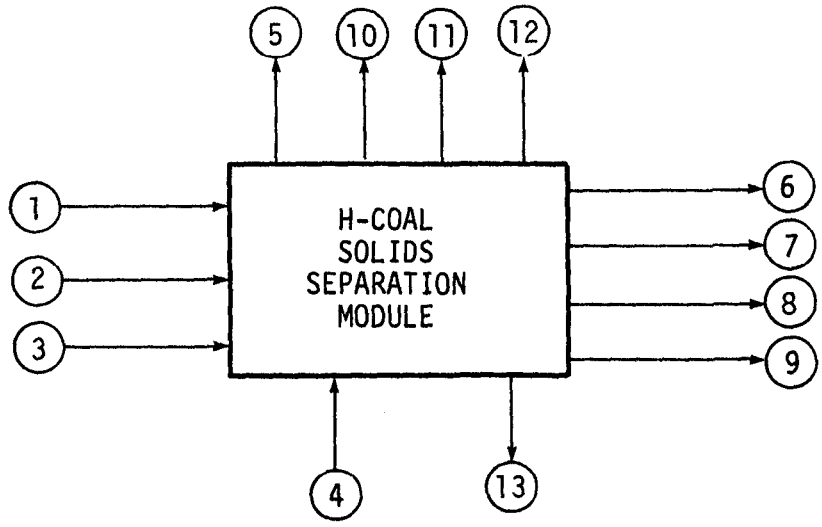

	STREAM	METRIC TONS PER DAY
1.	SOLIDS-LIQUID FROM GAS SEPARATION	11,832.7
2.	STEAM	638.7
3.	MAKE-UP ANTISOLVENT	44.5
4.	FUEL GAS & AIR	1,073.3
5.	VENT GAS	1.88
6.	LIGHT ENDS TO FRACTIONATION	1,842.9
7.	HEAVY FUEL OIL TO STORAGE	4,341.8
8.	HEAVY BOTTOMS TO GASIFIER	4,265.5
9.	SOUR WATER	642
10.	FLUE GAS	1,073.2
11.	HEAVY BOTTOMS NOT UTILIZED BY GASIFIER	1,421.0
12.	VAPOR LEAKAGE	NOT QUANTIFIABLE
	TRANSIENT SPILLS	NOT QUANTIFIABLE

Figure 19. H-Coal solids separation module process and waste streams

TABLE 36. H-COAL SOLIDS SEPARATION MODULE PROCESS AND WASTE STREAMS (EXTRACTED FROM TABLE 29)

Stream*		Metric tons per day
5	Vent gas	
	CO_2	0.6
	H_2S	0.5
	NH_3	0.09
	H_2O	0.09
	Hydrocarbons	0.6
		1.8
6	Light ends to fractionation module	
	CO_2	0.1
	H_2S	0.2
	H_2O	1.1
	Hydrocarbons	1,841.5
		1,842.9
7	Heavy fuel oil to storage	
	Hydrocarbons	4,334.6
	Solids	7.2
		4,341.8
8	Heavy bottoms to gasifier	
	Hydrocarbons	2,124.5
	Solids	2,141.0
		4,265.5
9	Sour water	
	H_2O	639.3
	Hydrocarbons	3.4
		642.7

(continued)

TABLE 36 (continued)

Stream*		Metric tons per day
11	Heavy bottoms not used in gasifier	
	Hydrocarbons	707.0
	Solids	714.0
		1,421.0

*Stream numbers refer to number in Figure 19 and do not include input streams 1 through 4. Information on these streams is given in Table 29.

The solids-containing residuum fraction generated in the fuel oil mode of the H-Coal process has been a subject of research at HRI for a number of years. The conceptual design for a commercial plant (35) suggests that some 5,400 metric tons per day of an approximate 50 percent solids residue could be utilized as feed for the hydrogen plant. Our calculations have shown that roughly 75 percent of this stream could be utilized to produce the hydrogen required for the process. The details of the Texaco Partial Oxidation Process, which HRI intends to use in the hydrogen production module, are proprietary. Consequently, an alternative method for producing hydrogen has been utilized in the report. Should operational data prove that the Texaco Partial Oxidation Process can utilize the entire nominal 5,400 metric tons per day, an alternative means for disposing of or utilizing the solids-containing residue will not be required.

If the remaining 25 percent of the solids-containing residue is not needed for hydrogen production, it is con-

ceivable that the excess gas could be utilized as fuel gas. A second possibility is that the heavy oil may be recovered from the solids, increasing the net product yield of the plant. As a third way to handle the remaining heavy bottoms, they could be sent to flakers and cooled to ambient temperature on a steel belt by indirect heat exchange using cooling water. The material then would be stored for disposal (38).

Flaked residuum will be generated in the Catlettsburg pilot plant. Plans are to analyze it for chemical and physical properties. The tests will suggest possible resource values of the residue and also its leachability (38).

Fractionation Module

Module Description--

The fractionation module separates a combined feedstock into fuel gas, naphtha, middle distillates, and heavy distillates and stabilizes the naphtha fraction. The module is depicted in Figure 20. Equipment in this area consists of fractionating and stripping columns, heat exchangers, direct-fired heaters, pumps, feed tanks and accumulators.

Process and Waste Streams--

The input-output diagram for the fractionation module is shown in Figure 21. The major waste streams from this module are the sour water generated in the naphtha stabilizer feed drum, the fuel gas from the heater, and the acid gas stream sent to the gas purification module. The sour water generated in this module is a steam ejector condensate and will have a significant COD. Hydrocarbon vapor leakage, though not a constant source of pollution, will be responsible for transient emissions. The liquid effluent streams from fractionation are sent to product storage or are used

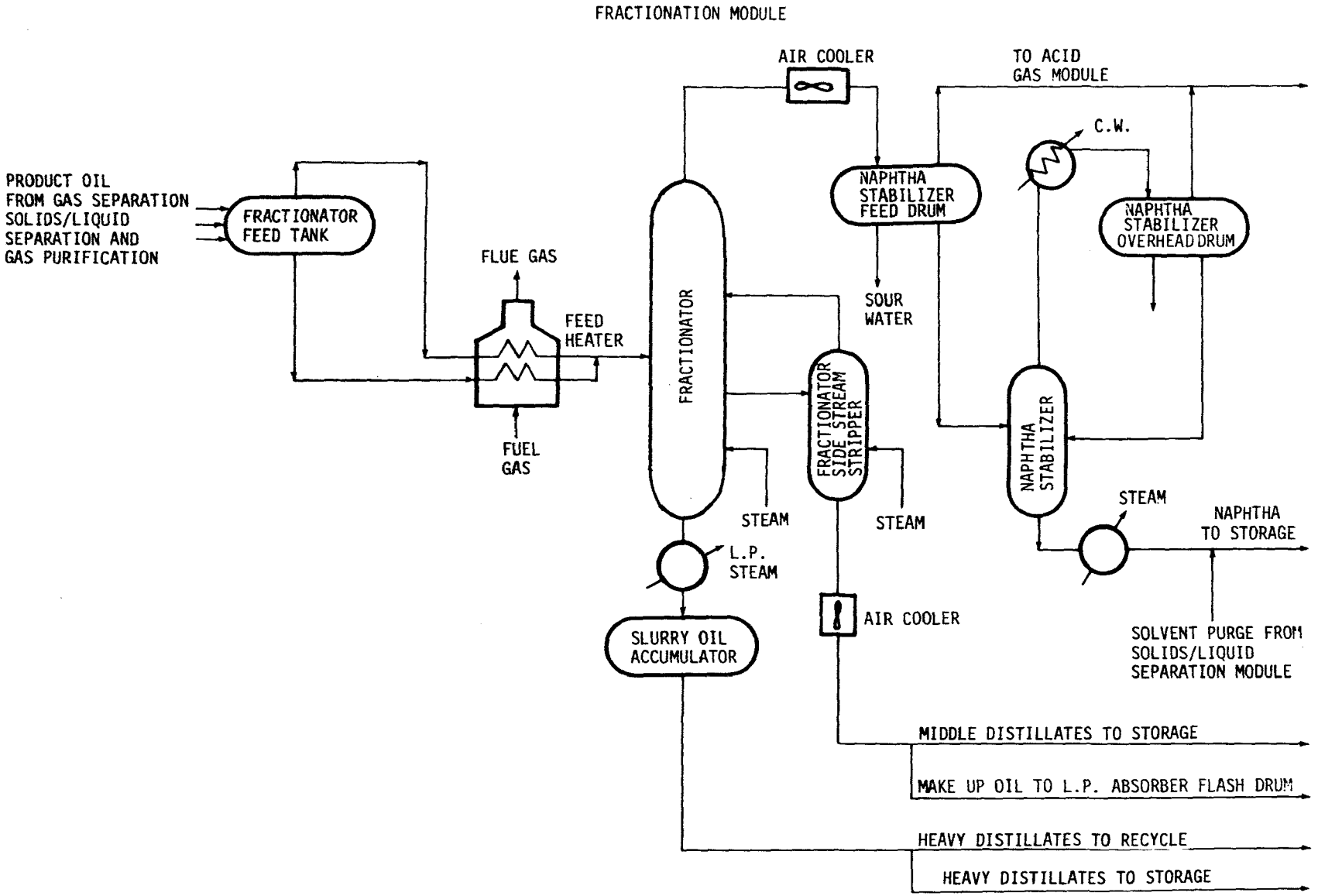

Figure 20. H-Coal process flow diagram - fractionation module (35)

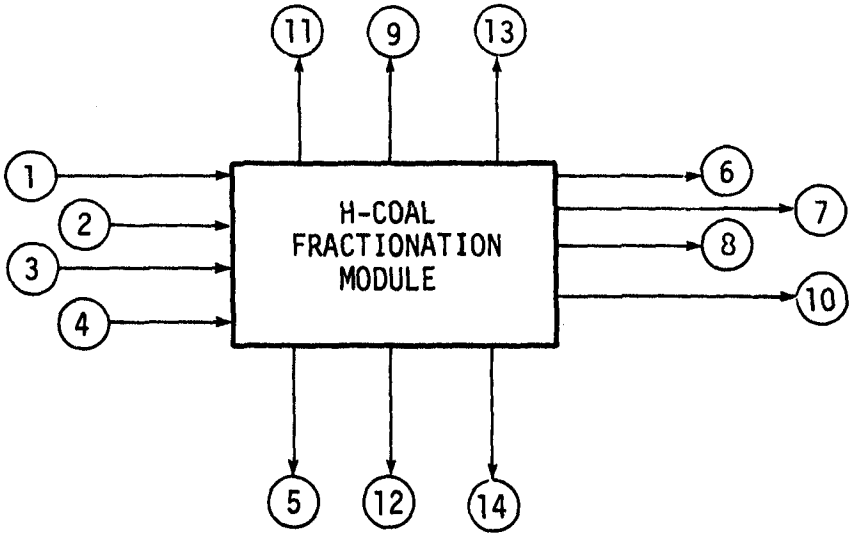

	STREAM	METRIC TONS PER DAY
1.	LIGHT AND MIDDLE OILS FROM GAS SEPARATION	12,873.0
2.	LIGHT AND MIDDLE OILS FROM SOLIDS-LIQUID SEPARATION	1,842.9
3.	STEAM	383.0
4.	FUEL GAS + AIR	1,638.4
5.	NAPHTHA TO PRODUCT STORAGE	1,535.64
6.	MIDDLE DISTILLATES TO PRODUCT STORAGE	388.96
7.	HEAVY FUEL OIL TO STORAGE	1,846.1
8.	RECYCLE HEAVY FUEL OIL	10,697.7
9.	ACID GAS	230.26
10.	SOUR WATER	384.59
11.	FLUE GAS	1,638.4
12.	MAKEUP OIL TO GAS SEPARATION MODULE	77.7
13.	VAPOR LEAKAGE	NOT QUANTIFIABLE
14.	TRANSIENT SPILLS	NOT QUANTIFIABLE

Figure 21. H-Coal fractionation module process and waste streams

in the process as recycled oil streams. The quantity of the product oils which is lost in transient spills and leaks cannot be quantified. The process and waste stream compositions from the fractionation module are given in Table 37.

The composition of product oils from the H-Coal process has been determined, although this analysis was not available for the boiling point fractions as they have been shown in the mass balances for this report. Table 38 shows the composition of product oils for a 204 to 343°C fraction and for a 343 to 493°C fraction at similar operating conditions (36). Product inspection obtained from continuous flow, bench-scale operations for Illinois No. 6 coal is shown in Table 39 (34).

Gas Purification Module

Module Description--

The purpose of the gas purification module is to remove hydrogen sulfide and carbon dioxide from the gaseous input streams and to produce a sweetened fuel gas for process and utility use. Figure 22 presents a schematic flow diagram of the gas purification module. The module consists of a number of parallel process trains, each train carrying out a similar function. A representative process train is shown.

The gas separation module and, to a lesser extent, the fractionation module generate gases contaminated with hydrogen sulfide, carbon dioxide, and traces of ammonia. Small quantities of carbonyl sulfide and carbon disulfide may be present, but these gases could not be quantified from available data. Hydrogen sulfide and ammonia are formed under the reducing conditions of the reactor, while carbon dioxide

TABLE 37. H-COAL FRACTIONATION MODULE PROCESS AND WASTE STREAMS (EXTRACTED FROM TABLE 29)

Stream*		Metric tons per day
5	Naphtha to product storage	
	CO_2	0.09
	H2S	0.45
	Hydrocarbons	1,535.1
		1,535.64
6	Middle distillates to product storage	
	CO_2	0.18
	H_2S	0.18
	Hydrocarbons	388.6
		388.96
7	Heavy fuel oil to product storage	
	Hydrocarbons	1,846.1
		1,846.1
8	Recycle heavy fuel oil	
	Hydrocarbons	10,697.7
		10,697.7
9	Acid gas to gas purification module	
	H_2	0.73
	CO	1.45
	CO_2	8.1
	H_2S	47.2
	NH_3	0.18
	H_2O	9.5
	Hydrocarbons	163.1
		230.26

(continued)

TABLE 37 (continued)

Stream*		Metric tons per day
10	Sour H_2O	
	CO_2	0.73
	H_2S	0.36
	H_2O	381
	Hydrocarbons	2.5
		384.59
12	Makeup oil to absorber in gas separation module	
	Hydrocarbons	77.7
		77.7

*Stream numbers refer to streams in Figure 21, module input streams are not included.

TABLE 38. COMPOSITION OF H-COAL PRODUCTS BY BOILING POINT FRACTIONS (37)

Composition of 400-650°F Fraction

Saturated Compounds

Component	wt %
n-paraffins	4.8
i-paraffins	1.7
Monocycloparaffins	14.0
Dicycloparaffins	7.9
Tricycloparaffins	2.6
	31.0

Unsaturated Non-Aromatics

Component	wt %
Monocycloparaffins	4.3
	4.3

Aromatic Compounds

Component	wt %
Alkyl Benzene	12.6
Indans & Tetralins	30.8
Indenes	5.7
Naphthalene	0.2
Napthalenes	3.5
Acenaphthenes	6.2
Tricyclics (C_nH_{2n-18})	0.4
	59.4

Phenols

Component	wt %
108 (MW)	0.04
122	0.52
136	0.98
150	0.38
164	0.07
178	0.01
	2.00

Non-Hydrocarbon

wt %
3.30

Composition of 650-919°F Fraction

Saturated Compounds

Component	wt %
Paraffins	1.4
Monocycloparaffins	3.1
Bicycloparaffins	0.6
Tricycloparaffins	0.7
Tetracycloparaffins	0.4
Pentacycloparaffins	0.2
Hexacycloparaffins	0.1
Phenyls	0.3
	6.8

Unsaturated Non-Aromatics

Component	wt %
Paraffins	0.0
Monocycloparaffins	0.5
Bicycloparaffins	0.3
Tricycloparaffins	0.2
Tetracycloparaffins	0.2
Pentacycloparaffins	0.1
Hexacycloparaffins	0.1
Phenyls	0.2
	1.6

Aromatic Compounds

Component	wt %
Alkyl Benzene	3.0
Indans & Tetralins	0.5
5-ringed Compounds	3.5
Napthalenes	21.5
Phenanthrenes	28.1
Chrysenes	8.6
Benzphenanthrenes	5.2
Pyrenes	5.9
	76.3

Phenols

Component	wt %
Undefined	1.5

Non-Hydrocarbon

wt %
13.8

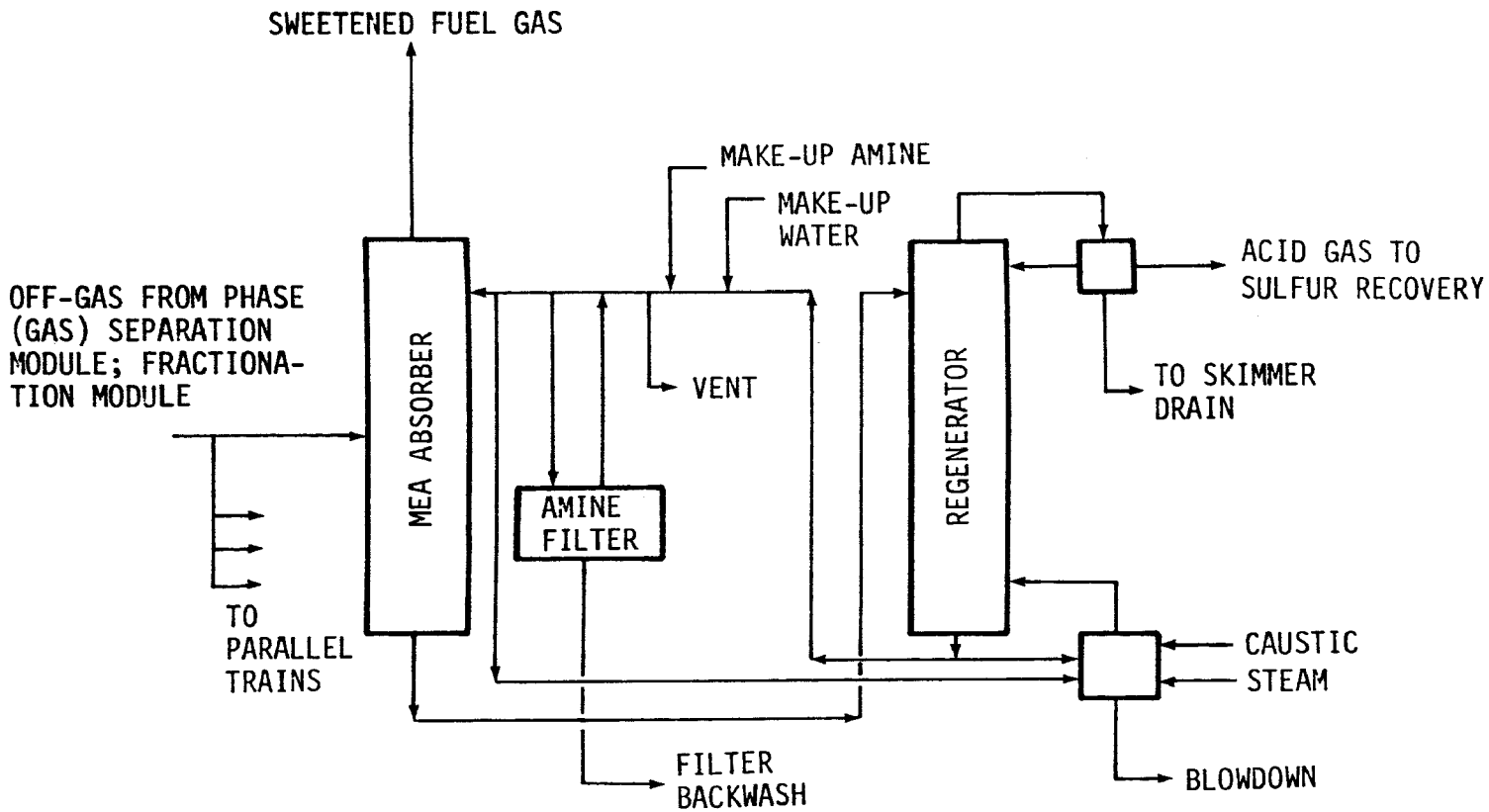

Figure 22. H-Coal process flow diagram - acid gas removal process (35)

TABLE 39. OVERALL PRODUCT INSPECTIONS OF H-COAL LIQUIDS (C_4 AND GREATER) DERIVED FROM ILLINOIS NO. 6 COAL (34)

IBP Cuts	API Gravity	Sulfur, %
IBP-204°C	27.1	0.1
204-316°C	15.4	---
343-524°C	-4.4	0.5
524°C	-16.6	---

is generated almost exclusively in the gasifier supplying the hydrogen-rich makeup gas.

Generally, a gas stream entering the module would first be pumped to the acid gas removal section, consisting of an amine absorber and regenerator. The gas stream is passed counter-currently through a 15 to 20 percent solution of monoethanolamine in the absorption tower. Hydrogen sulfide and carbon dioxide form complexes with the MEA as described by the following reactions:

(1) $HOCH_2CH_2NH_2 + H_2S \rightleftharpoons HOCH_2CH_2NH_3HS$

(2) $HOCH_2CH_2NH_2 + CO_2 \rightleftharpoons HOCH_2CH_2NH_3CO_3$

(3) $HOCH_2CH_2NH_2 + CS2 \longrightarrow HOCH_2CH_2NH_2CS_2$

(4) $HOCH_2CH_2NH_2 + COS \longrightarrow HOCH_2CH_2NH_2COS$

Only reactions 1 and 2 are reversible. Removal efficiencies have been found to be approximately 99.6 percent for hydrogen sulfide and 88 percent for carbon dioxide (39).

The MEA absorbent is regenerated by thermal decomposition at elevated temperatures. Only hydrogen sulfide and carbon

dioxide can be desorbed in this manner, with carbon disulfide and carbonyl sulfide forming non-regenerable compounds with the amine. Off-gas from the amine regenerator, containing almost all of the hydrogen sulfide and carbon dioxide, is sent to sulfur recovery.

The non-regenerable organic complexes are removed from the reclaimer by a purge stream. Caustic added to the reclaimer to precipitate metals also forms non-volatile salts with the amine complexes that are discharged as blowdown. Pure MEA is distilled off the reclaimer and recycled to the regeneration unit.

The sour gas contains nearly all the hydrogen sulfide and carbon dioxide. It is routed to the sulfur recovery unit. The product, sweetened fuel gas, is routed to process and auxiliary units to be used as fuel gas.

Process and Waste Streams--

Process and waste streams entering and leaving the gas purification module are shown in Figure 23. Stream constituents are quantified in Table 40. The wastewater streams are the blowdown from the amine regenerator and the backwash from the amine filter in the acid gas removal unit. Frequency of backwash will depend on the flow rate and solids content of the amine stream. Accidental spills will also be a source of intermittent wastewater generation.

Atmospheric emissions will consist of gas leakage from sumps and storage vents, and fugitive emissions during maintenance operations. The nature of the emission will depend on the source of leakage; therefore, no attempt has been made to quantify specific constituents.

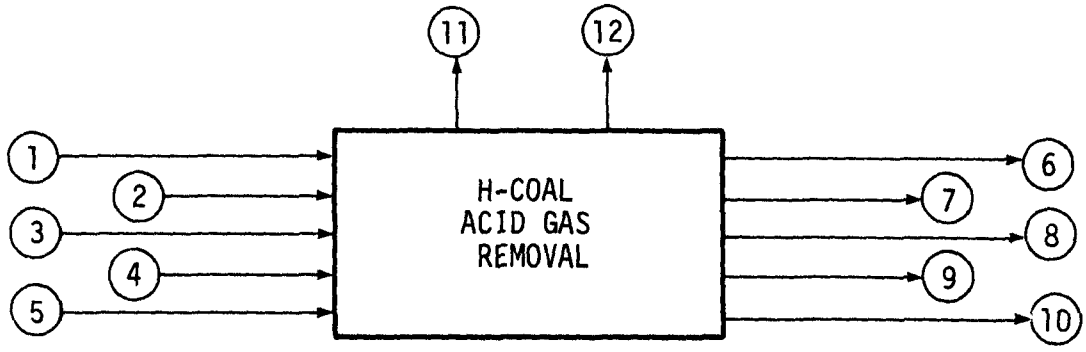

	STREAM	METRIC TONS PER DAY
1.	OFF-GAS FROM GAS SEPARATION MODULE	2,729.2
2.	OFF-GAS FROM FRACTIONATION MODULE	225.3
3.	STEAM	NOT QUANTIFIED
4.	MAKE-UP WATER TO THE AMINE SYSTEM	2.9
5.	MAKE-UP ADDITIVES	0.84
6.	ACID GAS TO SULFUR RECOVERY	908.65
7.	SWEETENED FUEL GAS	2,046.1
8.	WASTEWATER FROM ACID GAS REMOVAL	4.2487
9.	FILTER BACKWASH WASTEWATER	NOT QUANTIFIED
10.	VAPOR LEAKAGE	NOT QUANTIFIABLE
11.	TRANSIENT SPILLS	NOT QUANTIFIABLE
12.	VENTS FROM STORAGE AND SUMP FACILITIES	NOT QUANTIFIED

Figure 23. H-Coal acid gas removal process and waste streams

TABLE 40. H-COAL ACID GAS REMOVAL PROCESS AND WASTE STREAMS (EXTRACTED FROM TABLE 29)

Stream*		Metric tons per day
6	Acid gas to sulfur recovery	
	CO_2	374.9
	H_2S	504.7
	NH_3	0.45
	Hydrocarbons	20.0
	H_2O	8.6
		908.65
7	Sweetened fuel gas	
	H_2	146.7
	N_2	17.2
	CO	258.8
	CO_2	17.4
	H_2S	1.8
	Hydrocarbons	1,586.9
	H_2O	17.3
		2,046.1
8	Waste from acid gas removal	
	H_2O	3.4
	MEA	0.53
	NaOH	0.31
	Corrosion inhibitor	.0027
	Anti-foam (oleyl alcohol)	.006
		4.2487

*Stream numbers correspond to numbers in Figure 23. Streams 1-5 are input streams and are quantified in Table 29. Streams 9-11 have not been quantified.

The composition in weight percent of the C_1-C_3 gas produced is, according to bench-scale data (37):

Methane	29 to 36
Ethane	25 to 34
Propane	33 to 38

The olefin content of the C_1-C_3 gas products is very low. Ethylene content is near the limit of detection (approximately 0.2 weight percent of coal). Propylene content is also low, with the average yield being about 0.05 weight percent of coal.

The C_4 fraction contains 10 to 20 percent isobutane, with the remainder being straight chain compounds. Roughly 15 to 20 percent of the straight-chain C_4 fraction was olefinic in bench-scale units, while only 5 to 15 percent was olefinic in the 3 ton per day PDU. Presumably, this reflects the ability of the PDU to hydrogenate recycled butane in the recycle hydrogen-rich gas stream.

SECTION 5

THE EXXON DONOR SOLVENT PROCESS

INTRODUCTION

The Exxon Donor Solvent (EDS) process is a noncatalytic* coal liquefaction process that produces a versatile combination of fuel gases, light and heavy naphthas, kerosine, diesel oil, and fuel oils. The yields can be varied according to the desired end-products. Most of the process research data is limited to the utilization of Illinois No. 6 bituminous coal. However, studies are in progress to obtain operational data on Wyoming subbituminous coals and lignites.

The first phase of Exxon's research, in the period 1966 to 1973, resulted in the development of a basic process flow sheet and the determination of the general operating parameters. The second phase began in 1973 and is ongoing. Its goals are to define the optimum operating conditions and process module arrangements for the process (40).

The third phase began in July 1977, with the decision to build a 227 metric-ton per day pilot plant. The plant will be located in Baytown, Texas, and is scheduled for completion by early 1980. Additional research is underway

*Non-catalytic for liquefaction; catalysts are used for saturating solvent and upgrading products.

utilizing the existing 22.7 and 45.4-kg per day Recycle Coal Liquefaction Units (RCLU) and the 0.91 metric-ton per day Coal Liquefaction Pilot Plant (CLPP) to gather necessary process data for the scaled-up pilot plant design (41).

PROCESS DESCRIPTION

Overall Process and Operating Conditions

EDS process development is entering the pilot plant stage. Thus, a complete process description is unavailable. Using other liquefaction processes as a guide, a conceptualized 7,950-m^3 per day plant for donor solvent liquefaction has been designed based on information in references 40 and 42.

The process schematic of the hypothetical facility is shown in Figure 24. In the EDS process, coal is dried to 2 percent moisture and ground to minus 8 mesh. The prepared coal is mixed with donor solvent recovered from the process, at approximately 2 parts solvent to one part coal on a weight basis. The slurry is mixed with hydrogen-rich gas from the hydrogen generation module, preheated, and sent to the hydrogeneration reaction vessel.

Coal has been liquefied over a range of temperatures and pressures. For this study the liquefaction module is assumed to operate at 450°C and 12.5 MPa. This reaction produces a mixture of gaseous, liquid, and solid products which require further processing.

Gas separation operations receive the raw hydrogenation products. Noncondensible gases are removed and sent to the gas purification module. Light naphtha is condensed and

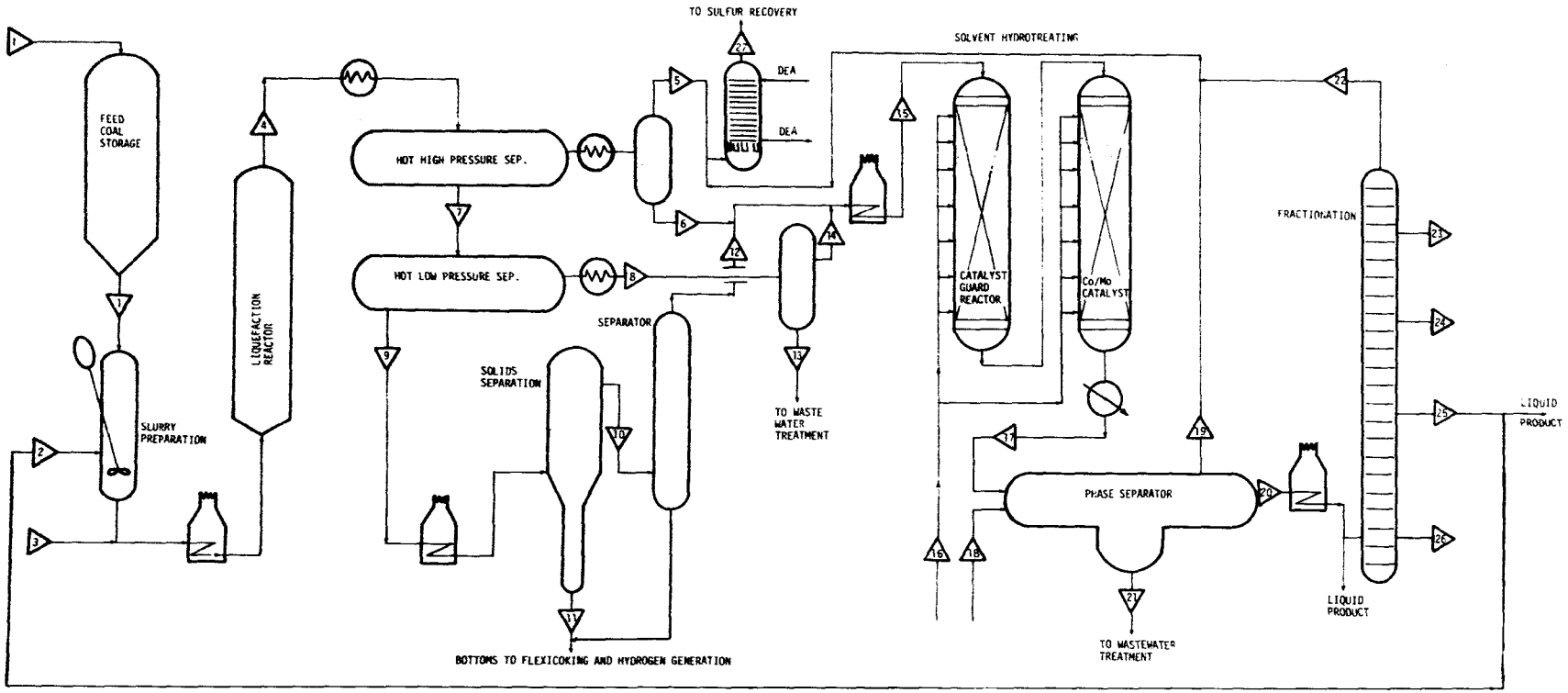

Figure 24. Exxon donor solvent coal liquefaction process schematic (40)

sent to the hydrotreating module. This high pressure separation operation occurs at 250°C and 12.5 MPa. Heavier liquids and solids are sent to a low pressure separator operating at around 200°C and 101 kPa. This separator removes heavy naphthas and water. Heavy naphtha is sent to the hydrotreating module. The water, possibly containing some ammonia and phenolic compounds, is sent to the wastewater treatment facilities. Heavier liquid products and solids pass from the low pressure separator to the solids separation module.

A vacuum distillation unit, operating at 370°C and 3.3 kPa, removes solids from the heavy hydrocarbon liquids, thereby preparing them for hydrotreating. The solids consist of ash, char, and heavy tar residues. Utilization and disposal options for the bottoms from vacuum distillation are discussed in Section 6.

Heavy liquids from the solids-liquid separation are combined with the naphthas from gas separation and preheated. The preheated stream enters the hydrotreating module. Hydrotreating regenerates the donor solvent which provides most of the hydrogen in the hydrogenation. Further upgrading of the liquid products also is performed in this module. The hydrotreated product is separated into three phases: a gas phase which is removed and sent to the gas purification module, an aqueous phase which is sent to the wastewater treatment facilities, and the hydrotreated product liquids which are sent to the fractionation module or product storage.

Fractionation separates the mixture of liquids into useful products by distillation. Fractions are collected at specified boiling point ranges. The solvent needed for liquefaction is recycled from this point to slurry preparation.

The excess solvent is sent to product storage. Overhead gas from fractionation is sent to the gas purification module along with the gases from the hydrotreating and gas separation modules.

Gas purification separates the feed gas into a highly concentrated acid gas stream and a sweet gas stream. The sweet gas has a significant heating value and may be used on-site as fuel. Acid gases are sent to sulfur recovery operations with acid gases from the hydrogen generation module and wastewater treatment operations. In addition to hydrogen sulfide, ammonia and phenols also are present in process wastewaters. These constituents are recovered by stripping and extraction processes, respectively.

Auxiliary facilities are needed to provide steam, electric power, and makeup hydrogen-rich gas for the process. They will be located in the liquefaction complex. Auxiliary facilities are discussed in detail in Section 7.

Overall Material Balance

Table 41 is a compilation of all EDS process stream flow rates in metric-tons per day. The stream numbers in Table 41 correspond with the stream numbers shown in Figure 24.

Table 42 gives the proximate, ultimate, and ash analysis of Illinois No. 6 coal. These coal characteristics were applied to the feed coal assumed in the material balances of the hypothetical 7,950-m^3/day EDS facility described in Figure 24 and Table 41.

Table 43 gives an overall material inventory.

TABLE 41. MATERIAL INVENTORY-EXXON DONOR SOLVENT PROCESS*

Stream description	Feed coal	Donor solvent	Makeup gas	Hydrogenation products	Overhead gases	Light naphtha	Raw liquid product	Separator product	Heavy liquids and solids	Heavy liquids
Number**	1	2	3	4	5	6	7	8	9	10
Composition										
Coal (2% moisture)	14,385									
Donor solvent		28,199		28,199			28,199		28,199	28,199
H_2			34	34	34					
C_1			41	131	131					
C_2				46	46					
C_3				27	27					
C_4				18	18					
Light naphtha				292		292				
Heavy naphtha				1,321			1,321			
Kerosine				2,183			2,183	2,183	2,183	2,183
Diesel oil				2,543			2,543		2,543	2,543
Fuel oil				1,069			1,069		1,069	1,069
Heavy fuel oil				277			277		277	277
Tar residue				1,787			1,787		1,787	172
Char				1,339			1,339		1,339	
Ash				1,351			1,351		1,351	
H_2O				1,817			1,817	1,817		
H_2S			trace	310	310					
NH_3				141	141					
N_2			7	8	7					
TOTALS	14,385	28,199	82	42,893	714	292	41,886	4,000	38,748	34,443

Stream description	Bottoms residue	Hydrotreater feed	Waste water (2)	Heavy naphtha	Total feed to hydrotreater	Makeup gas	Hydrotreated product	Water	Gas to purification	Feed to fractionation
Number**	11	12	13	14	15	16	17	18	19	20
Composition										
Donor solvent		28,199			28,199		28,199			28,199
H_2						408	34		34	
C_1						501	516		516	
C_2							20		20	
C_3							43		43	
C_4							11			11
Light naphtha					292		700			700
Heavy naphtha				1,321	1,321		2,268			2,268
Kerosine		2,183			2,183					
Diesel oil		2,543			2,543		4,932			4,932
Fuel oil		1,069			1,069					
Heavy fuel oil		277			277		43			43
Tar residue	1,615	172			172					
Char	1,339									
Ash	1,351									
H_2O			1,585				91	91		
H_2S							39			
NH_3						0.4	39			
N_2							24		24	
TOTALS	4,305	34,443	1,585	1,321	36,056	909.4	36,959	91	637	36,153

(continued)

TABLE 41 (continued)

Stream description	Wastewater	Gases to purification	Light naphtha	Heavy naphtha	Middle distillate	Heavy fuel oil	Fuel gas***
Number**	21	22	23	24	25	26	27
Composition							
Donor Solvent					28,199		
H_2							67
C_1							326
C_2							66
C_3							71
C_4		11					29
Light naphtha			700				
Heavy naphtha				2,268			
Kerosine					4,932		
Diesel oil						43	
Heavy fuel oil	18						
Phenolics	18						
H_2O	181						
H_2S	39					trace	
NH_3							
N_2						31	
TOTALS	256	11	700	2,268	33,131	74	559

* Calculated from data in (40,42-44).
** Refer to Figure 24.
***Contains approximately 298 metric tons per day of combustible hydrocarbons.

All flowrates in metric tons per day based on a production rate of 7,950 m^3 per day.

TABLE 42. ILLINOIS NO. 6 COAL ANALYSIS* (42)

Proximate analysis

	As received	Dry
Moisture	16.5	---
Ash	8.0	9.58
Volatile	35.24	42.21
Fixed carbon	41.79	50.05
Sulfur	3.50	4.19
Alkalies as Na_2O	0.15	0.18
Higher heating value, Mega joules/kg	24.9	29.8

Ultimate analysis

	As received	Dry
Moisture	16.50	---
Carbon	58.17	69.67
Hydrogen	4.22	5.05
Nitrogen	1.54	1.84
Chlorine	0.18	0.22
Sulfur	3.50	4.19
Ash	8.00	9.58
Oxygen	7.89	9.45

Ash Analysis - ignition basis

Phosphorous as P_2O_5	0.11
Silica, SiO_2	43.82
Ferric oxide, Fe_2O_3	24.69
Alumina, Al_2O_3	17.19
Titanium, TiO_2	0.88
Lime, CaO	4.96
Magnesia, MgO	1.02
Sulfur trioxide, SO_3	4.29
Potassium oxide, K_2O	1.61
Sodium oxide, Na_2O	1.21
Undetermined	0.22

*% by weight

TABLE 43. OVERALL MATERIAL BALANCE - EDS PROCESS
(EXTRACTED FROM TABLE 41)

Inputs		Outputs	
Material	Metric tons/day	Material	Metric tons/day
Coal to process	14,384.8	Hydrogen	67.0
Coal to H_2 generation	2,198.6	Fuel gases C_1-C_4	270.3
Coal to utilities	3,628.7	Light naphtha	700.7
Donor solvent	28,199.6	Heavy naphtha	2,267.8
Oxygen	2,571.4	Middle distillate	4,932.3
Hydrogen	441.5	Heavy fuel oil	43.0
Process water	91.0	Bottoms (char, ash, tar, residue)	4,476.5
	51,515.6	Wastewater	1,748.7
		Ammonia	179.6
		Phenol	17.7
		Hydrogen sulfide	383.6
		Donor solvent	28,199.6
		Miscellaneous wastes, blowdowns, and sludges	8,228.8
			51,515.6

Material and Energy Considerations

Process Material Yields--

The product yield in unit weight of products (middle distillate plus heavy naphtha) per unit weight of coal is 0.50 using values shown in Table 43. The coal requirement for steam and electrical power generation is estimated to be 3600 metric tons per day. If this is added to the coal used in the process, the yield is 0.40.

Process Thermal Efficiency--

The process thermal efficiency* is defined as:

$$\frac{\text{The heating value of products (joules)}}{\text{The heating values of coal feed and make-up gas (joules)}} \times 100\%$$

$$= \frac{133.3 + 209.5\ (TJ)}{428.7 + 62.6 + 4.46\ (TJ)} \times 100\% = \frac{342.8\ (TJ)}{495.8\ (TJ)} \times 100\% = 69.1\%$$

Heating values assumed are shown in Table 44.

TABLE 44. HEATING VALUE OF PRODUCTS AND MATERIALS IN THE EDS PROCESS (FLOW RATES FROM TABLE 41)

Input	Metric TPD	MJ/kg	TJ/day
Coal	14,384.8	29.8	428.7
Hydrogen	441.5	141.9	62.6
Carbon monoxide	441.5	10.1	4.46
Output			
Fuel gas	270.3	52.0	14.1
Naphthas	2,968.5	44.9	133.3
Middle distillate and heavy fuel oil	4,975.3	42.1	209.5

Overall Thermal Efficiency--

The overall thermal efficiency is defined as:

$$\frac{\text{The heating values of products and combustible by-products (joules)}}{\text{The heating values of all raw materials consumed by the process and auxiliary facilities (joules)}} \times 100\%$$

*This calculation is a first law thermodynamics efficiency. It considers only heat quantity values.

$$= \frac{342.8 + 14.1\ (TJ)}{602.3 + 12.0\ (TJ)} \times 100$$

$$= \frac{356.9\ (TJ)}{614.3\ (TJ)} \times 100 = 58\%$$

Process heat requirements are assumed to be two percent of the heating value of the total coal feed = (0.02)(602.3 TJ/day)
= 12.0 TJ/day

By comparison with the H-Coal process thermal efficiency of 70%, 58% seems to be too low. However, two factors may explain this difference. First, EDS uses additional coal for H_2 generation. If it were assumed that the char and tar could be used, this might help to increase thermal efficiency. The other factor is the difference between the heating values of the coal feed for the two processes.

DESCRIPTION OF THE PROCESS MODULES

To simplify discussions of process operations, the EDS process is considered to consist of modules, each of which performs specific functions. The primary modules of the EDS process are:

- Slurry preparation and hydrogenation
- Gas separation
- Solids separation
- Hydrotreating
- Fractionation

These five modules, supplemented by the necessary auxiliary facilities to provide material and energy inputs to the systems, represent the EDS process. Brief discussions of

each module, relating them to the other modules as well as the overall process, are provided.

Slurry Preparation and Hydrogenation Module

Module Description--

Figure 25 shows a flow diagram for this module. Within the hydrogenation module, coal and hydrogen are reacted under conditions of elevated temperature and pressure. The hydrogenation reaction increases the overall hydrogen-to-carbon ratio. Complex organic compounds contained in coal are converted to simpler, lighter compounds. Many of the new compounds are liquids at ambient temperature and pressure.

Using a donor solvent to supply hydrogen permits effective operation at milder conditions than in processes which use gaseous hydrogen alone or with a catalyst. The reactor used in the EDS process operates at about 450°C and 12.4 MPa. The mild conditions permit selecting construction materials that may result in less expensive equipment costs compared to other liquefaction processes (40).

Feed coal at minus 2.38 mm and 2 percent moisture content is continuously mixed with hydrogenated donor solvent at a ratio of 2 parts solvent to 1 part coal by weight. The donor solvent is a recycled process product in the middle distillate boiling range of 200 to 230°C IBP and consists of a complex mixture of aromatic hydrocarbons. The coal/donor solvent slurry is injected with hydrogen to improve the flow characteristics of the mixture and improve the yield efficiency of the liquefaction module.

The slurry is preheated before proceeding to the liquefaction reactor. Studies are currently in progress to

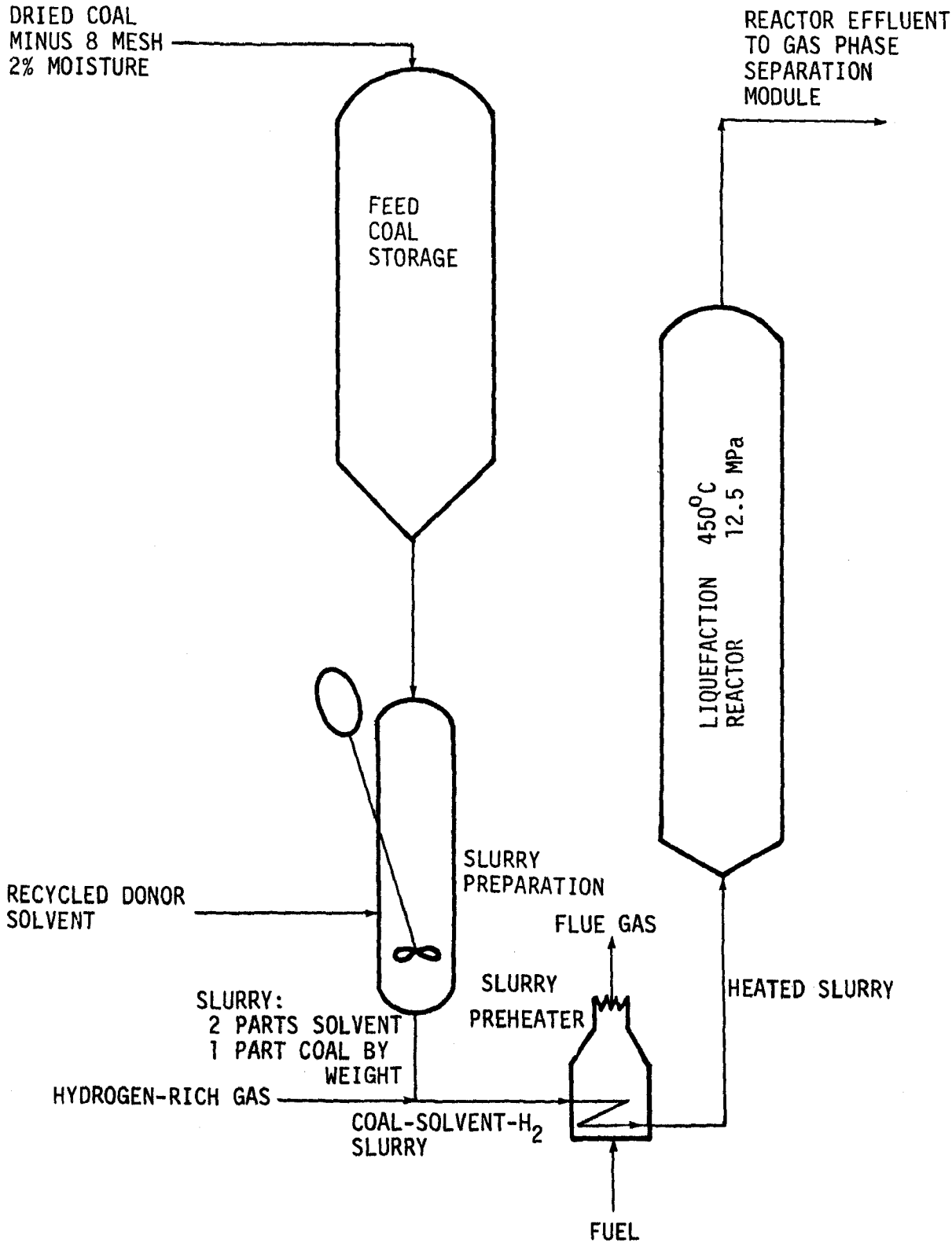

Figure 25. EDS process flow diagram - slurry preparation and hydrogenation module (40)

determine the relative merits of preheating the hydrogen and slurry separately versus preheating the combined hydrogen-slurry mixture. Following preheating, the hydrogen-slurry mixture is fed into the liquefaction reactor.

The configuration of the liquefaction reactor is proprietary, and little information about it has been published. It is thought to be a tubular reactor design. The use of a hydrogen donor solvent in the liquefaction reactor in place of molecular hydrogen is the primary difference between the EDS process and the other liquefaction processes. The donor solvent materials are well known and comprise aromatic hydrocarbons which are partially hydrogenated, generally having one or more of the nuclei at least partially saturated. Several examples of such materials are tetralin, dihydronaphthalene, dihydroalkylnaphthalenes, dihydrophenanthrene, dihydroanthracene, dihydrochrysenes, tetrahydropyrenes, tetrahydrochrysenes, tetrahydrofluoranthene, and other hydrogenated polynuclears. Of particular value are the hydrophenanthenes and hydroanthracenes. These materials are obtained directly from distillation of the process stream.

In donor solvent hydrogenation, the donor molecule transfers hydrogen atoms to a coal fragment. Figure 26, using tetralin as an example, illustrates what happens to the donor and a hypothetical coal fragment. The spent donor solvent (in this case, naphthalene) travels through the process as a component of the product stream. When the product stream undergoes hydrotreating (a second hydrogenation to upgrade the product), the spent solvent is regenerated. The fraction of the product stream containing most of the regenerated donor solvent is distilled off and recycled to the reaction.

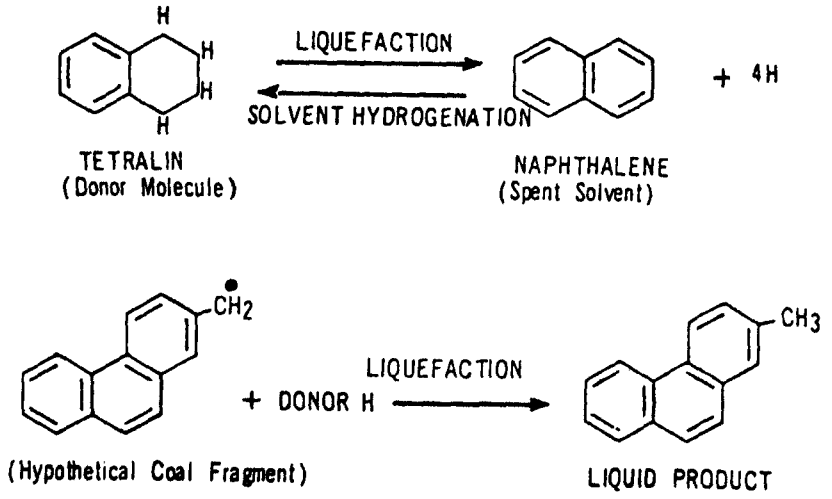

Figure 26. Tetralin as hydrogen donor (42)

Further design work is in progress on the liquefaction reactor. A two-stage liquefaction process is being investigated. Two-stage liquefaction is a process in which bottoms (residue) from the coal liquefaction reactor are charged with fresh solvent and hydrogen to a second liquefaction reactor. Bench-scale studies and preliminary RCLU work indicate that this technique will increase liquefaction yields. This increased conversion is greater than would be expected from the additional residence time of the residue in the first-stage reactor. The reactor products leaving the first-stage liquefaction reactor are stripped with hydrogen at 204°C to separate 80 to 90 percent of the spent donor solvent and coal liquids from the residue. The residue with fresh solvent and hydrogen passes to the second-stage liquefaction reactor for further processing.

Process and Waste Streams--

In addition to the hydrogenation reactor, other hardware being developed by Exxon for the EDS process is proprietary. Detailed drawings for the purpose of illustration

are not available. Figure 27 shows the process and waste streams for the module. Where possible, process stream flow rates are quantified in Table 45.

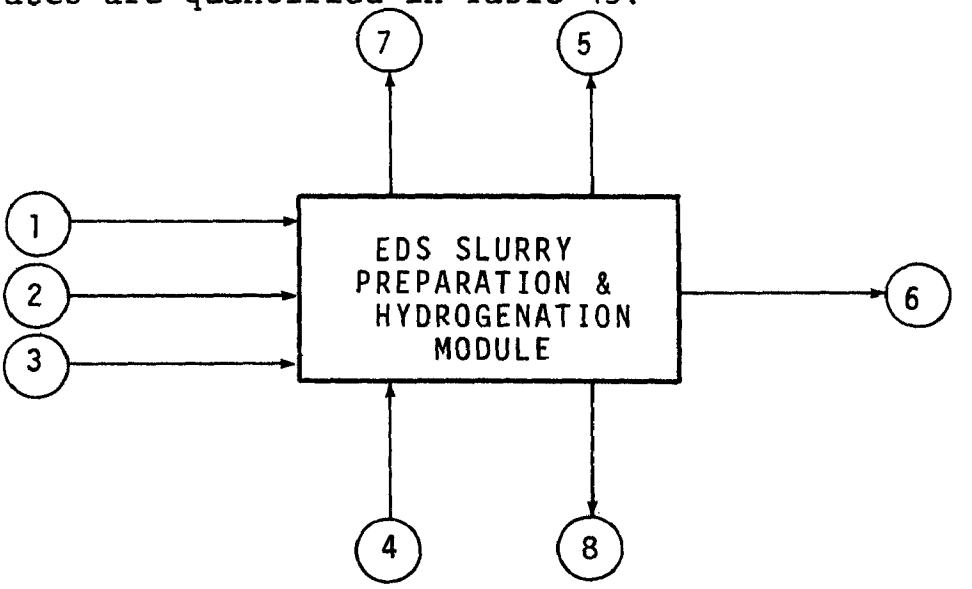

STREAM		METRIC TONS PER DAY
1.	FEED COAL	14,385
2.	DONOR SOLVENT	28,199
3.	HYDROGEN	82
4.	PREHEATER FUEL	NOT QUANTIFIED
5.	PREHEATER FLUE GAS	NOT QUANTIFIED
6.	HYDROGENATION PRODUCTS	42,892
7.	VAPOR LEAKAGE	NOT QUANTIFIABLE
8.	TRANSIENT SPILLS	NOT QUANTIFIABLE

Figure 27. EDS slurry preparation & hydrogenation module process and waste streams

TABLE 45. EDS SLURRY PREPARATION AND HYDROGENATION MODULE PROCESS AND WASTE STREAMS (EXTRACTED FROM TABLE 41)

	Stream*	Metric tons per day
1.	Feed coal	14,385
2.	Donor solvent	28,199
3.	Make-up hydrogen H_2-34, C_1-41, N_2-8	82
4.	Reactor effluent	42,892
	donor solvent-28,199; H_2-34; C_1-C_4-222	
	light naphtha-292; heavy naphtha-1,321	
	kerosine-2,183; diesel oil-2,543; fuel oil-1,069	
	heavy fuel oil-277; tar & char-3,126; ash-1,351	
	H_2O-1,817; H_2S-310, NH_3-141; N_2-7	

*Refer to Figure 27.

Hydrogenation in the liquefaction reactor liberates organic sulfur, nitrogen, and oxygen by a substitution reaction involving the fragmentation of the carbon polymeric structure of the coal and the replacement of sulfur, nitrogen, and oxygen with hydrogen. The products of the reaction consist of lower molecular weight hydrocarbons, hydrogen sulfide, ammonia, and water.

Gas Separation Module

Module Description--

The gas phase separation module takes the raw product of the hydrogenation module and begins the series of operations which remove undesirable components in the raw product

and upgrade the product into a useful, saleable commodity.

Figure 28 depicts the flow of process streams through the module and shows the interconnections.

The raw product from the reactor contains gaseous, liquid, and solid components. This product stream is separated into components in the two-stage gas separation module. The first stage operates at 250°C and 12.4 MPa. It removes the gas phase and light naphtha as one stream. This stream is cooled, and the light naphtha is separated out in a flash drum. Hydrogen, fuel gases, hydrogen sulfide, ammonia, carbon monoxide, carbon dioxide, and some water vapor remain.

The product slurry liquids proceed from the first-stage to the second stage hot low pressure separator, operating at 202°C and 101.3 kPa pressure. This stage removes the naphtha (boiling point 70 to 202°C) and water from the product slurry. The heavy naphtha and water stream are cooled and separated in a flash drum. The crude coal naphtha may contain up to 15 weight percent phenolic compound, depending on the percent yield of heavy naphtha in the liquefaction product.

Process and Waste Streams--

Figure 29 shows the process and waste streams for this module. Stream constituents are quantified in Table 46. The only continuous wastewater stream leaving this module is that from the Stage II flash drum. It will contain traces of H_2S, NH_3, phenolics, cresols and phenols, and other hydrocarbons.

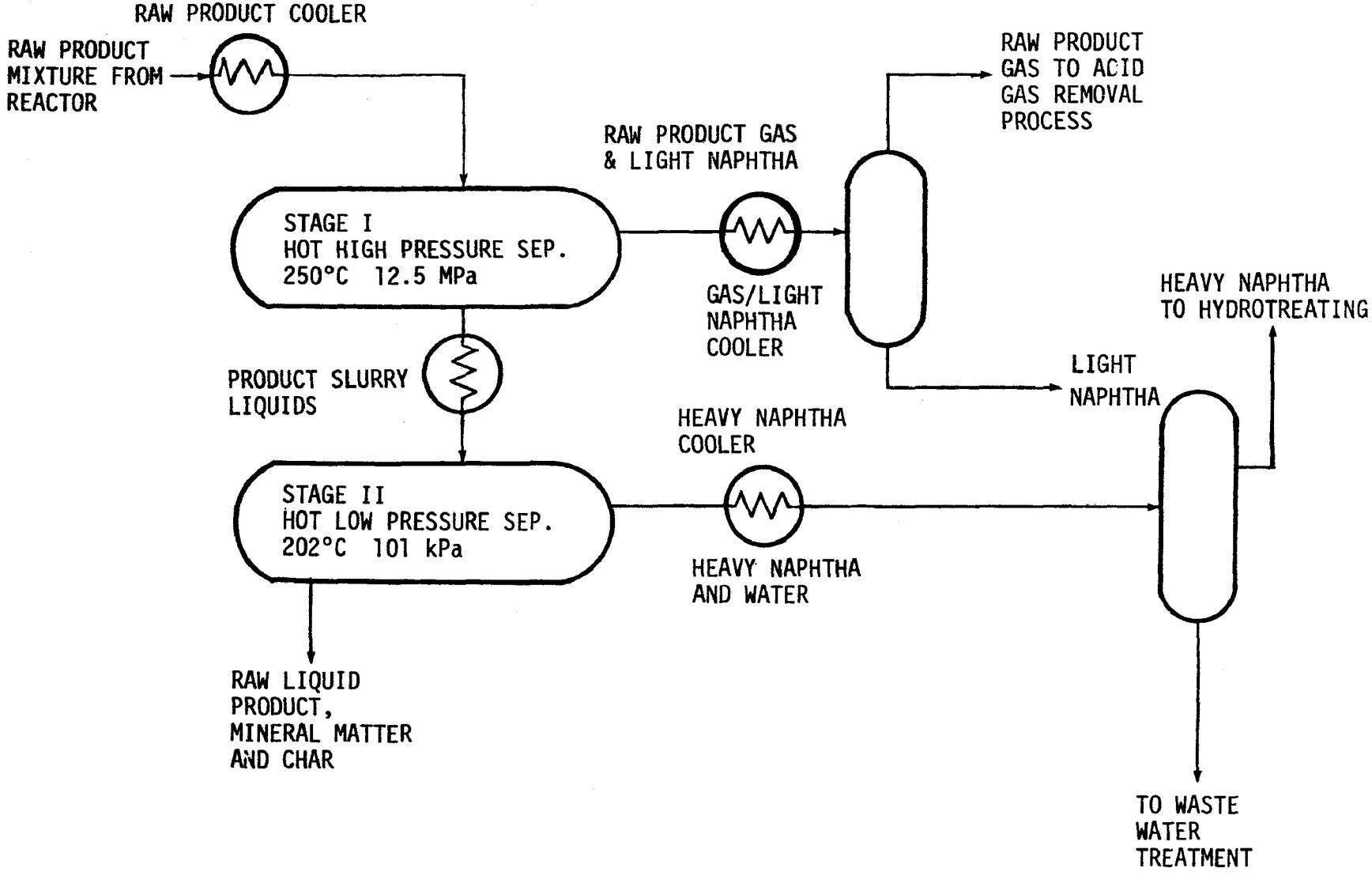

Figure 28. EDS process flow diagram - gas separation module (40)

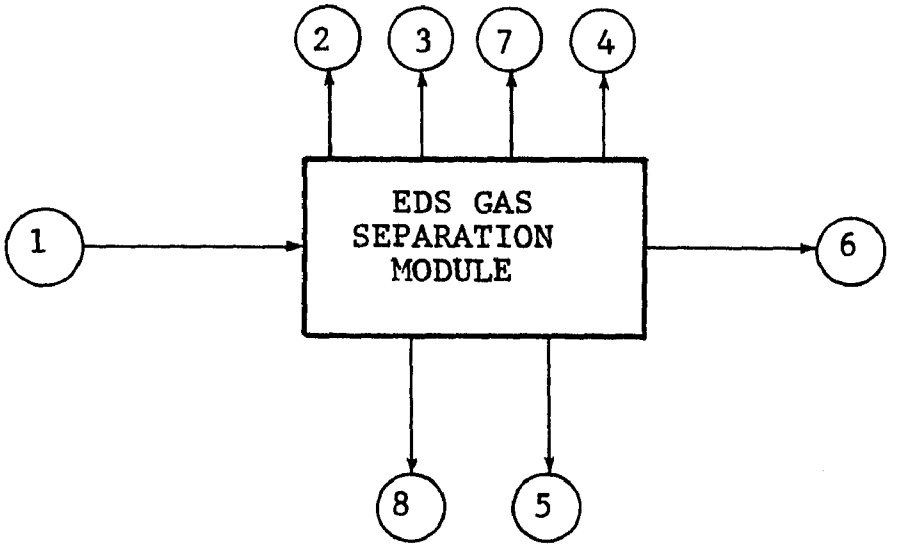

STREAM		METRIC TONS PER DAY
1.	HYDROGENATION PRODUCTS	42,653
2.	ACID GAS TO GAS CLEANING	714
3.	LIGHT NAPHTHA TO HYDRO-TREATING	292
4.	HEAVY NAPHTHA TO HYDRO-TREATING	1,321
5.	WASTEWATER	1,585
6.	SOLIDS-LIQUID TO SEPARATION	34,444
7.	VAPOR LEAKAGE	NOT QUANTIFIABLE
8.	TRANSIENT SPILLS	NOT QUANTIFIABLE

Figure 29. EDS gas separation module process and waste streams

TABLE 46. EDS GAS SEPARATION MODULE
PROCESS AND WASTE STREAMS (EXTRACTED FROM TABLE 41)

	Stream*	Metric tons per day
1.	Hydrogenation products	42,653
2.	Acid gas	714
	H_2-34, C_1-C_4-222, H_2S-310, NH_3-141, N_2-7	
3.	Light naphtha	292
4.	Heavy naphtha	1,321
5.	Wastewater	1,585
6.	Process stream to solids-liquid separation module	34,445
	donor solvent-28,193; kerosine-2,183; diesel fuel-2,543; fuel oil-1,069; heavy fuel oil-277; tar residue-180	
		81,010

*Refer to Figure 29.

There are no continuous gas emissions to the atmosphere from this module. All off gases are sent to acid gas removal. Vapor leakage and spills are two potential intermittent emission sources.

Solids Separation Module

Module Description--

The solids phase separation module removes suspended solids materials such as unreacted coal, mineral matter, and char. The resulting raw liquid product is suitable feed for the hydrotreating module. Figure 30 depicts the flow of process streams through the module and shows the interconnections. In the EDS process, solids separation is performed

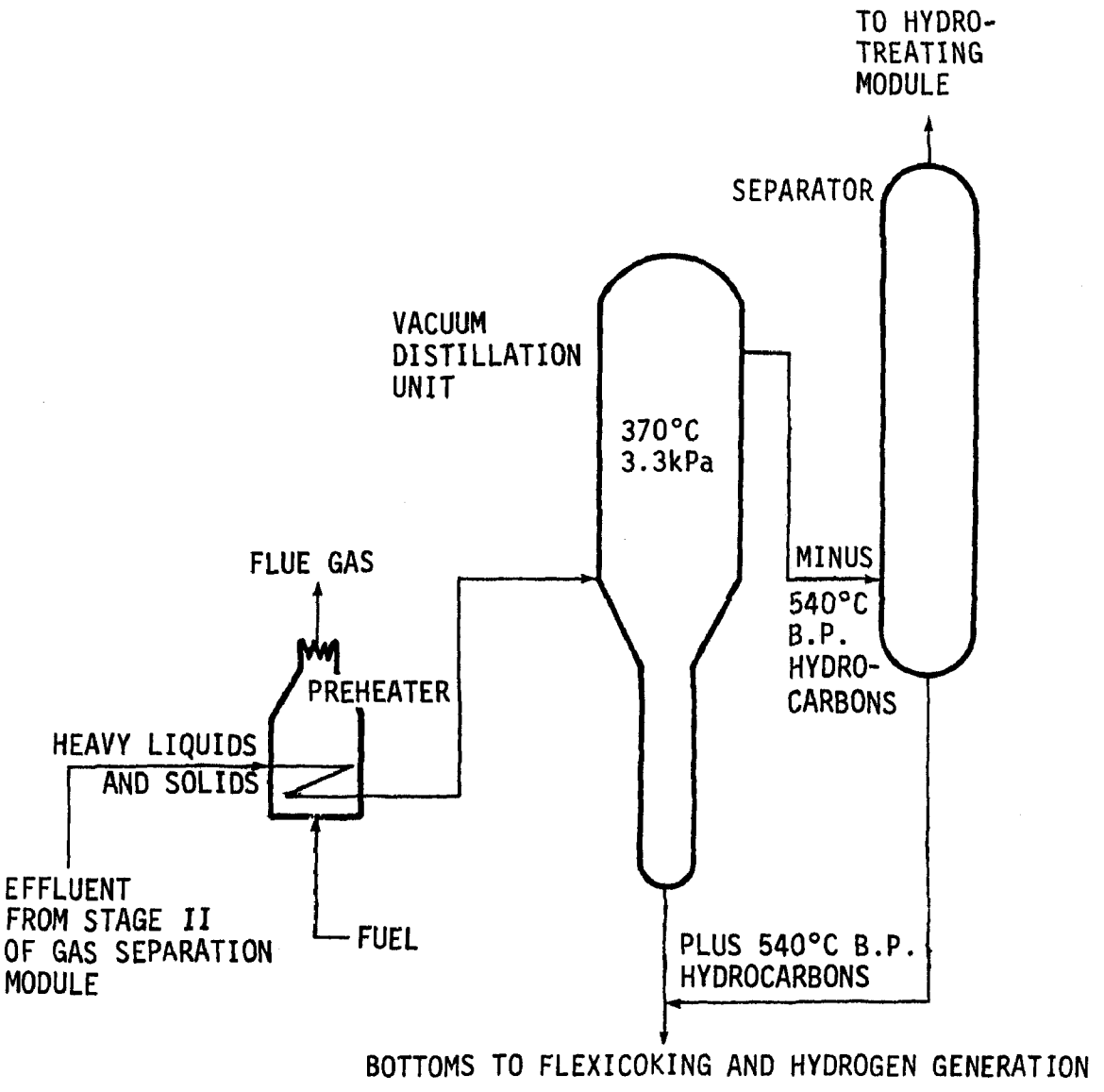

Figure 30. EDS process flow diagram - solids separation module (40)

by a vacuum distillation unit. The liquid from the low pressure flash separator passes through a preheater and into the vacuum still. The still operates at 370°C in the flash zone. Operating pressure is low: 3.3 kPa. Hydrocarbons with boiling points below 540°C are volatilized and sent to a separator, leaving bottoms product consisting of the suspended solids, and a residue of hydrocarbons with boiling points greater than 540°C.

Some hydrocarbons with boiling points greater than 540°C do exit the vacuum still. The separator collects them, and they are combined with the vacuum still bottoms. Lighter hydrocarbon liquids pass from the separator to the hydrotreating module.

The gas-liquid phase from vacuum distillation is returned to atmospheric pressure and the heavy oils are separated by flashing at 370°C. Depending on product needs, the heavy oils can be sent to storage, recycled for further processing, or combined with the overhead flash stream and sent to solvent hydrotreating. The overhead flash stream with or without recombined heavy oils is mixed with both the light naphtha fraction from the first-stage phase separator and the heavy naphtha from the second-stage separator. The combined product streams are preheated to 380°C and sent to solvent hydrotreating. It should be noted that the spent donor solvent is present in the product stream from the solids separation module.

Process and Waste Streams--

A diagram of the solids separation module with all input and output streams is shown in Figure 31. Stream constituents are quantified in Table 47. The waste streams are flue gas and solids residue or bottoms from the vacuum distillation unit.

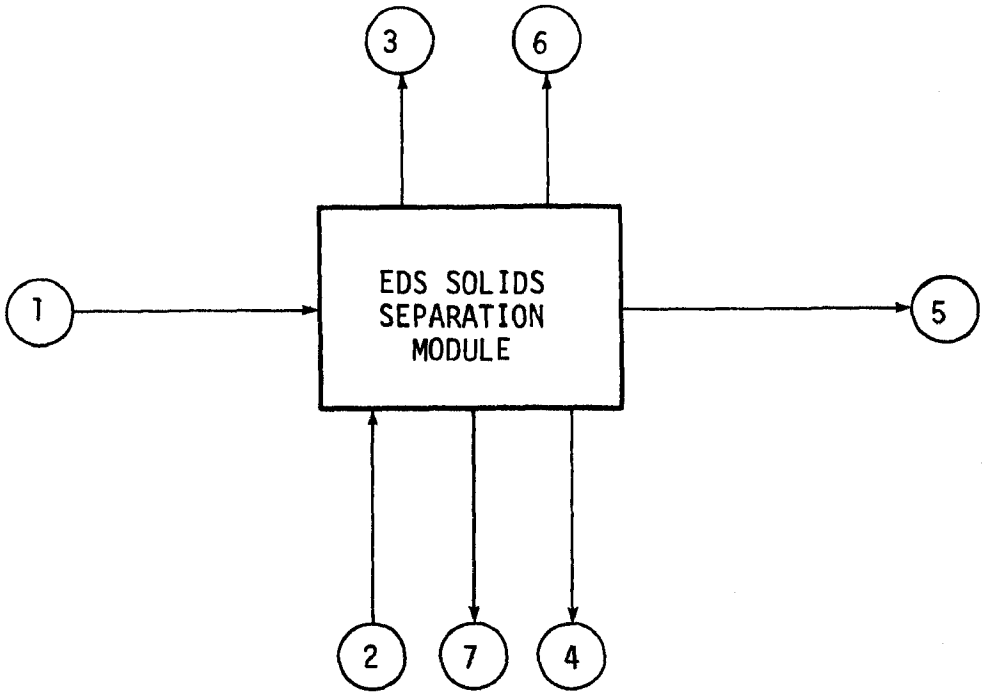

	STREAM	METRIC TONS PER DAY
1.	HEAVY LIQUIDS & SOLIDS FROM GAS SEPARATION	38,748
2.	FUEL TO PREHEATER	NOT QUANTIFIED
3.	PREHEATER FLUE GAS	NOT QUANTIFIED
4.	SOLIDS RESIDUE	4,305
5.	TO HYDROTREATING	34,443
6.	VAPOR LEAKAGE	NOT QUANTIFIABLE
7.	TRANSIENT SPILLS	NOT QUANTIFIABLE

Figure 31. EDS solids separation module process and waste streams

TABLE 47. EDS SOLIDS SEPARATION MODULE PROCESS AND WASTE STREAMS (EXTRACTED FROM TABLE 41)

Stream*		Metric tons per day
1. Heavy liquids-solids		38,748
4. Solids residue		
Tar residue	1,615	
Char	1,339	
Ash	1,351	4,305
5. Products to hydrotreating		
Donor solvent	28,199	
Kerosine	2,183	
Diesel oil	2,543	
Fuel Oil	1,069	
Heavy fuel oil	277	
Tar residue	172	34,443.0

*Refer to Figure 31

The bottoms product has some energy content, recoverable by methods including gasification and pyrolysis. Exxon is currently developing a proprietary process to recover energy from the bottoms product of the vacuum still. This process is called flexicoking.

Although used commercially in the petroleum industry, flexicoking is still in the design and development stage for use on coal liquefaction bottoms products. However, estimates indicate a maximum yield of liquid and gas products of 40 weight percent of bottoms, exclusive of the inorganic ash component. In this report the remaining coke, containing an estimated 40 to 50 weight percent ash, is mixed with coal and used for hydrogen generation. Hydrogen is generated by simultaneously mixing carbon monoxide with oxygen and shifting carbon monoxide and steam to carbon dioxide and

hydrogen as illustrated below.

$$(1)\quad 2C + O_2 \longrightarrow 2\ CO$$
$$(2)\quad CO + H_2O \longrightarrow H_2 + CO_2$$

Hydrotreating Module

Module Description--

In the hydrotreating module, liquid hydrocarbons react with hydrogen at elevated temperatures and pressures. Some of the nitrogen, oxygen, and sulfur in the liquid fuels are converted to ammonia, water, and hydrogen sulfide, respectively. In the case of the EDS process, hydrotreating has an additional function. The donor solvent, which provides hydrogen for reaction with coal, is resaturated with hydrogen and recycled to the hydrogenation module.

A flow diagram of the hydrotreating module is shown in Figure 32. Liquid hydrocarbons pass through a preheater to an initial catalyst guard reactor. The guard reactor permits deposition of coke, which can cause plugging problems in the main hydrotreating reactor. Hydrogen is injected along the length of both reactors for temperature control. The two reactors commonly operate at 380°C and 12.5 MPa.

The final choice of catalyst has not been made. However, commercially available hydrogenation catalysts have been tested by Exxon in three bench-scale hydrogenation units over a range of temperatures, pressures, space velocities, and hydrogen treater rates. Partially hydrogenated creosote oil at 200 to 370°C simulates the spent solvent in the EDS process.

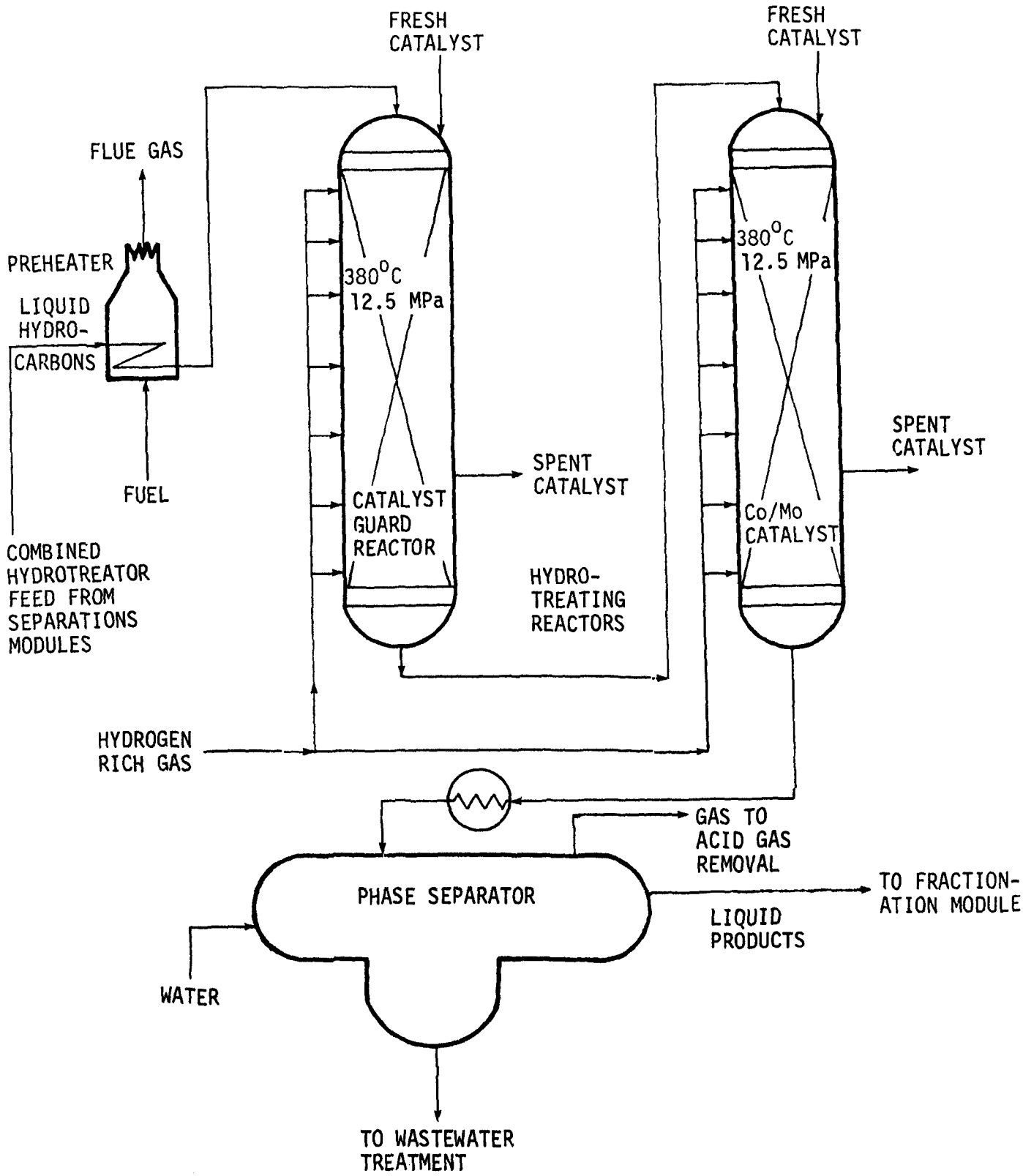

Figure 32. EDS process flow diagram - hydrotreating module (40)

Current data indicate that the nickel/molybdenum (NiMo) catalysts possess about twice the hydrogenation activity of the cobalt/molybdenum (Co/Mo) catalysts. In addition, the hydrogenation activity of Co/Mo catalysts is significantly increased by the addition of sulfur (about 0.5 weight percent H_2S of liquid feed) to the feedstock. For the bench-scale runs, carbon disulfide or butanethiol is added to the hydrogenated feedstock at the start of each process run to produce hydrogen-sulfide gas which converts the metal catalyst from the oxide to the more active sulfide form. Removal of this sulfur "spike" resulted in higher desulfurization activity, although the denitrogenation, deoxygenation, and hydrogenation activities were significantly reduced. Addition of the sulfur "spike" restored the lost activities. The above effects were also observed to a lesser degree with the Ni/Mo catalyst.

These findings suggest that recycling some hydrogen sulfide with the hydrogen-rich gas to the EDS process solvent hydrotreater will increase catalyst activity and thus reduce the required hydrotreater size and cost. Studies are currently underway to test the effects of recycling on hydrogen donor solvent under operational conditions. Additional data will be required to establish the effects of higher levels of carbon dioxide and ammonia in the hydrotreater reactor on the catalyst activity and life.

Process and Waste Streams--

Figure 33 shows the process and waste streams for the hydrotreating module. The streams are quantified in Table 48. Light hydrocarbons, hydrogen sulfide and, possibly, ammonia are formed in the hydrotreating module. Preheater flue gas is another waste stream of the hydrotreating module. The hydrotreater effluent is sent to a phase separation vessel, such as an oil-water separator. Three phases

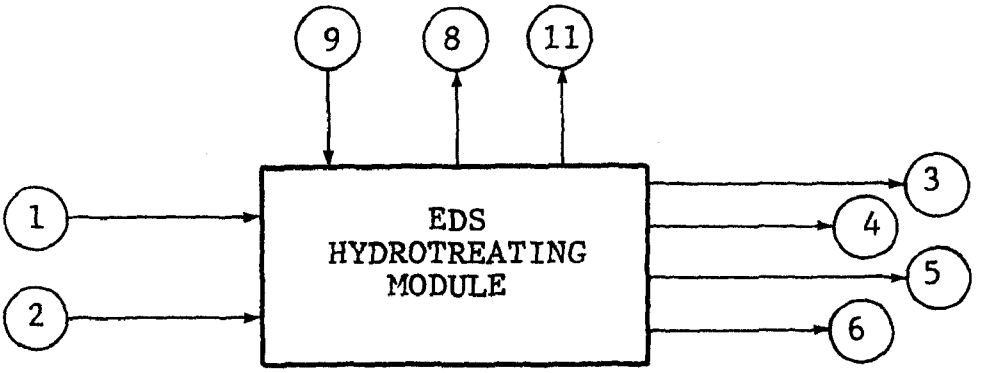

	STREAM	METRIC TONS PER DAY
1.	COMBINED HYDROTREATER FEED FROM SEPARATIONS MODULES	35,765
2.	MAKEUP HYDROGEN-RICH GAS TO HYDROTREATERS	933
3.	WATER TO HYDROTREATER PRODUCTS SEPARATOR	91
4.	GAS TO GAS CLEANING	710
5.	WASTEWATER	220
6.	LIQUID PRODUCTS TO FRACTIONATION	36,148
7.	FUEL TO PREHEATER	NOT QUANTIFIED
8.	PREHEATER FLUE GAS	NOT QUANTIFIED
9.	FRESH CATALYST	NOT QUANTIFIED
10.	SPENT CATALYST	NOT QUANTIFIED
11.	VAPOR LEAKAGE	NOT QUANTIFIABLE
12.	TRANSIENT SPILLS	NOT QUANTIFIABLE

Figure 33. EDS hydrotreating module process and waste streams

exit the separator. The first phase is noncondensible gases which are sent to the gas cleaning module. The second phase is wastewater removed from the bottom of the separator. This water contains some dissolved organics and ammonia. The third phase consists of hydrocarbon liquids removed from the oil-water separator above the water-organic phase boundary. The hydrocarbons are pumped to the preheater of the fractionation module. A spent catalyst waste stream will be generated periodically.

It should be noted that process research, development, and design work is not yet in the final stage. Catalyst studies are being performed to determine which catalyst type is best. After phase separation, part of either the liquid or gaseous effluent (or both) may be recycled to the hydrotreating module. Additional study is required to determine the optimum processing scheme for the hydrotreating module.

Fractionation Module

Module Description--

The fractionation module refines raw synthetic oil from hydrotreating into fractions of specified boiling ranges, just as natural crude petroleum is fractioned in existing refinery operations. Figure 34 is a flow diagram for the fractionation module.

Process and Waste Streams--

A diagram of the module with all input and output streams is shown in Figure 35. The hydrotreated syncrude is preheated and fed to a distillation column. The fractionation process should yield the following products: overhead gases (C_1 to C_4), light and heavy naphthas, a middle oil (which includes the donor solvent), and a heavy fuel oil. Part of the middle oil stream is returned to the process for

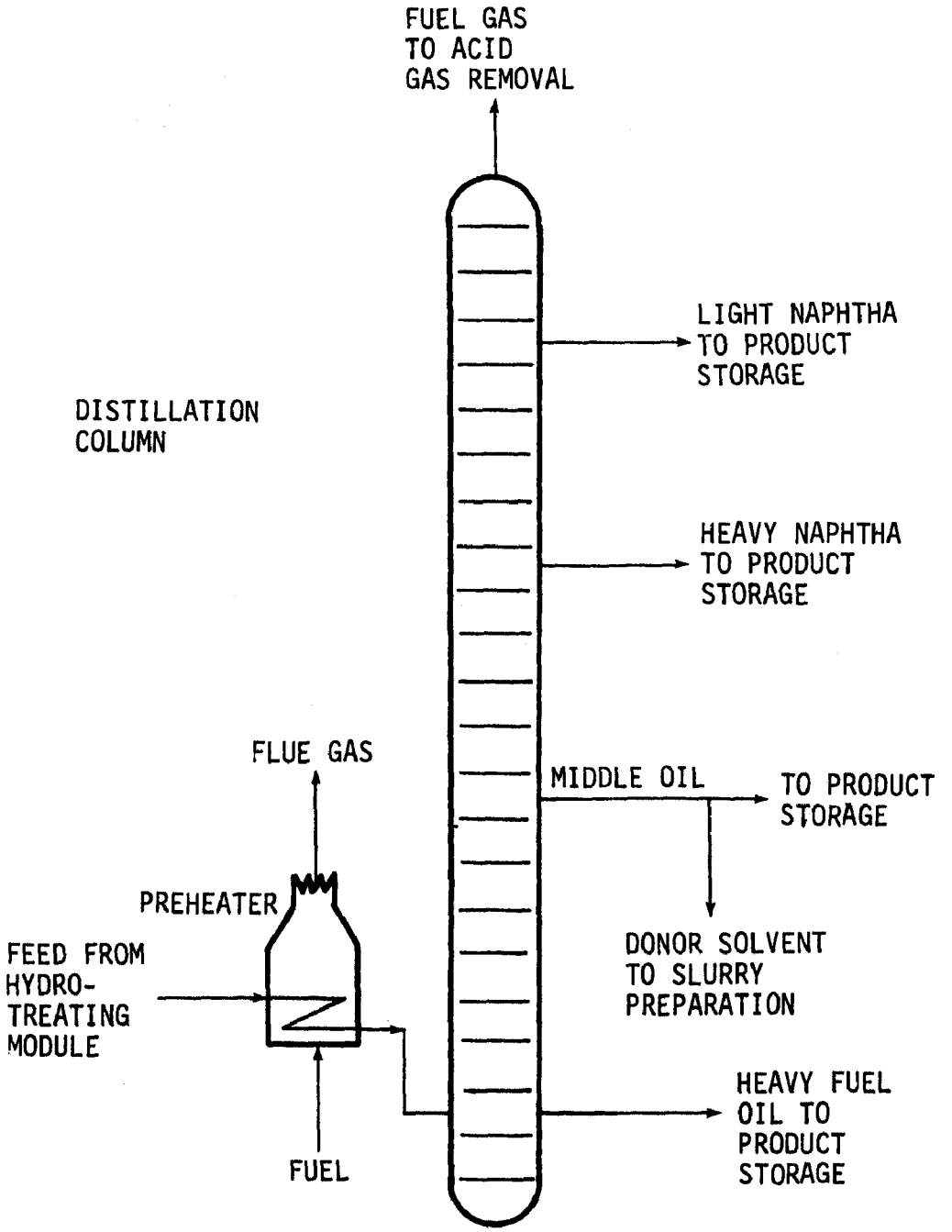

Figure 34. EDS process flow diagram - fractionation module (40)

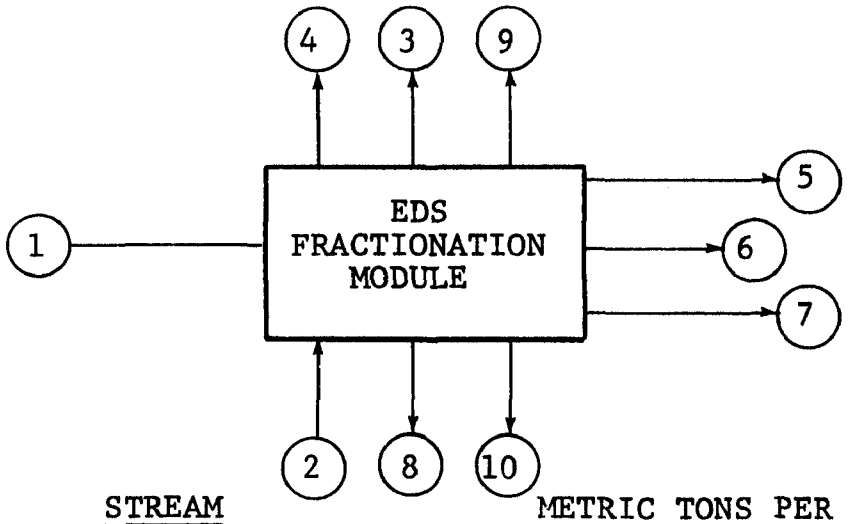

STREAM		METRIC TONS PER DAY
1.	FEED FROM HYDROTREATING MODULE	36,148
2.	PREHEATER FUEL	NOT QUANTIFIED
3.	PREHEATER FLUE GAS	NOT QUANTIFIED
4.	FUEL GAS	11
5.	LIGHT NAPHTHA	655
6.	HEAVY NAPHTHA	2,268
7.	MIDDLE OIL	32,219
8.	HEAVY FUEL OIL	43
9.	VAPOR LEAKAGE	NOT QUANTIFIABLE
10.	TRANSIENT SPILLS	NOT QUANTIFIABLE

Figure 35. EDS fractionation module process and waste streams

TABLE 48. EDS HYDROTREATING MODULE PROCESS AND WASTE STREAMS (EXTRACTED FROM TABLE 41)

	Stream*		Metric tons per day
1.	Combined hydrotreater feed from phase separations modules		35,765
2.	Makeup hydrogen-rich gas to hydrotreaters		933
3.	Water to hydrotreater products separator		91
4.	Gas to gas cleaning module		710
5.	Wastewater		220
6.	Liquid products to fractionation module		36,148
	donor solvent	28,194	
	C_4	11	
	light naphtha	655	
	heavy naphtha	2,268	
	diesel oil	4,932	
	heavy fuel oil	43	

*Refer to Figure 33.

hydrogenation. The light hydrocarbon overhead stream is sent to the acid gas removal module. Other fractions are sent to product storage. These streams are quantified in Table 49. Product characteristics are summarized in Table 50. Preheater flue gas is the only waste stream generated during normal system operations. However, abnormal wastes, such as leaks and spills can be serious, especially during

TABLE 49. EDS FRACTIONATION MODULE PROCESS AND WASTE STREAMS (EXTRACTED FROM TABLE 41)

	Stream*	Metric tons per day
1.	Feed from hydrotreating module	36,148
4.	Gas to gas purification module	11
5.	Light naphtha to product storage	655
6.	Heavy naphtha to product storage	2,268
7.	Middle oil (approximately 85% recycled to hydrogenation module as donor solvent; remainder to product storage)	32,219
8.	Heavy fuel oil to product storage	43

*Refer to Figure 35.

TABLE 50. EDS PRODUCT ANALYSES (42)

	Heavy Naphtha*		Fuel Oil	
	Raw Liquid	Hydrotreated Liquid	Raw Liquid	Hydrotreated Liquid
Nominal Boiling Range, °C	70/200	70/200	200/540	200/540
Distillation, 15 to 5°C:				
10 wt. %	106	92	247	239
50 wt. %	180	157	368	347
90 wt. %	199	182	433	412
Density, g/cu. cm	0.87	0.80	1.08	1.01
Elemental Analysis, wt. %				
C	85.60	86.80	89.40	90.80
H	10.90	12.90	7.70	8.60
O	2.82	0.23	1.83	0.32
N	0.21	0.06	0.66	0.24
S	0.47	0.005	0.41	0.04
Higher Heating Value,				
Mega joules/kg	42.6	44.9	39.8	42.1

*Excludes C_6/70°C Naphtha Cut

startup and shutdown and during periods of maintenance. At such times all fugitive materials, including products, can be considered environmentally significant wastes.

Acid Gas Removal Module

Module Description--

This module separates acid gases (H_2S and CO_2) from noncondensible hydrocarbons. The resulting sweet gas is acceptable as fuel gas. The acid gas stream is a suitable feed for sulfur recovery operations. The diethanolamine (DEA) acid gas removal process has been selected for application to the EDS process in this study. A flow schematic of the DEA process is shown in Figure 36. Gas is fed to the absorber. The DEA solution absorbs hydrogen sulfide and carbon dioxide. Sweetened gas exits the top of the absorber. The DEA solution is passed to a regenerator which causes release of the acid gases from the solution. Regenerated DEA is returned to the absorber. The DEA process is capable of reducing the hydrogen sulfide content of the sweetened gas to a few ppm by volume. A block diagram of the acid gas removal module showing module input and output streams is shown in Figure 37.

Process and Waste Streams

DEA solution blowdown is the major process waste stream. Acid gases are sent to primary sulfur recovery operations. Process and waste streams are quantified in Table 51.

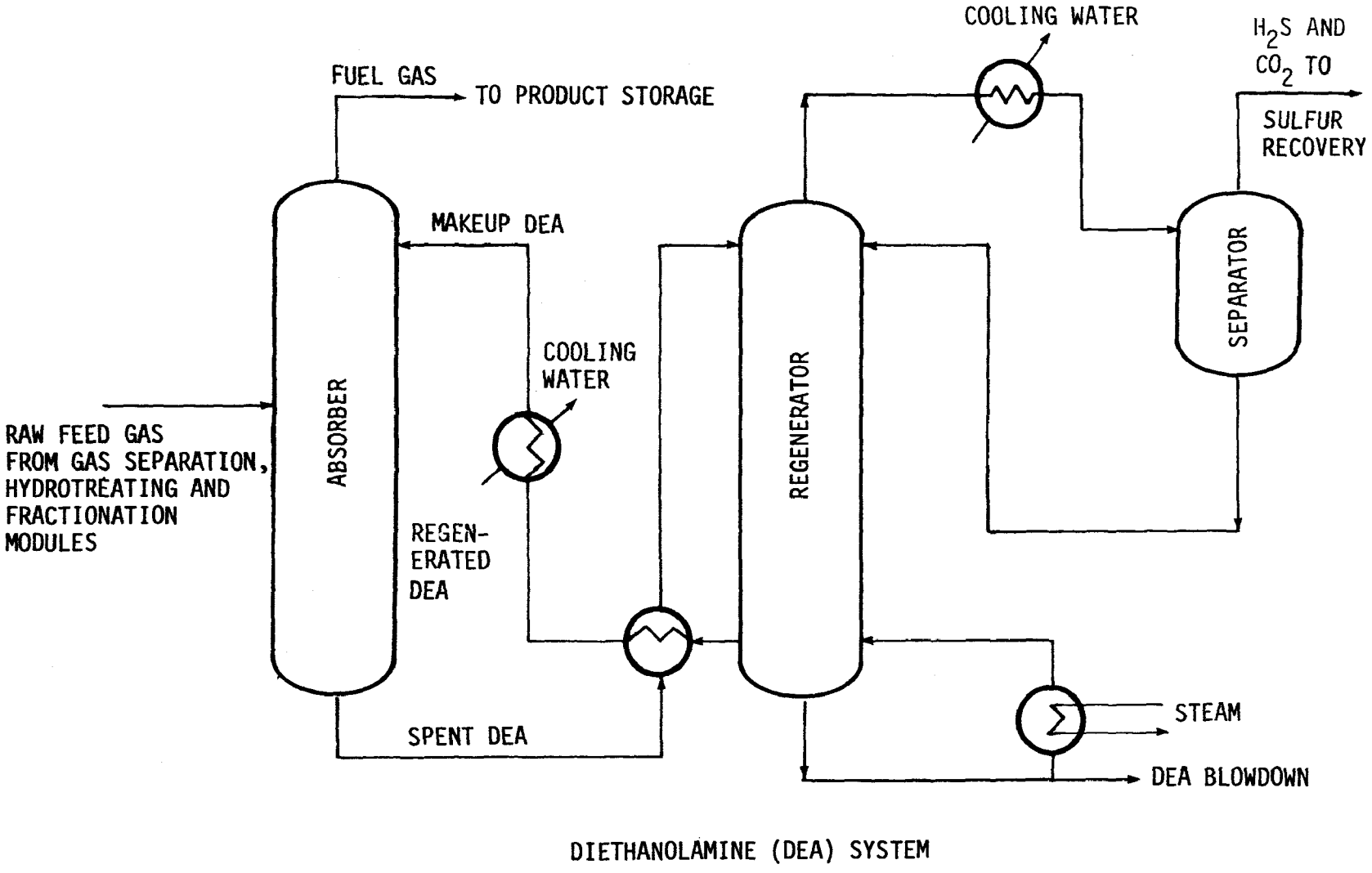

Figure 36. EDS process flow diagram - acid gas removal process (40)

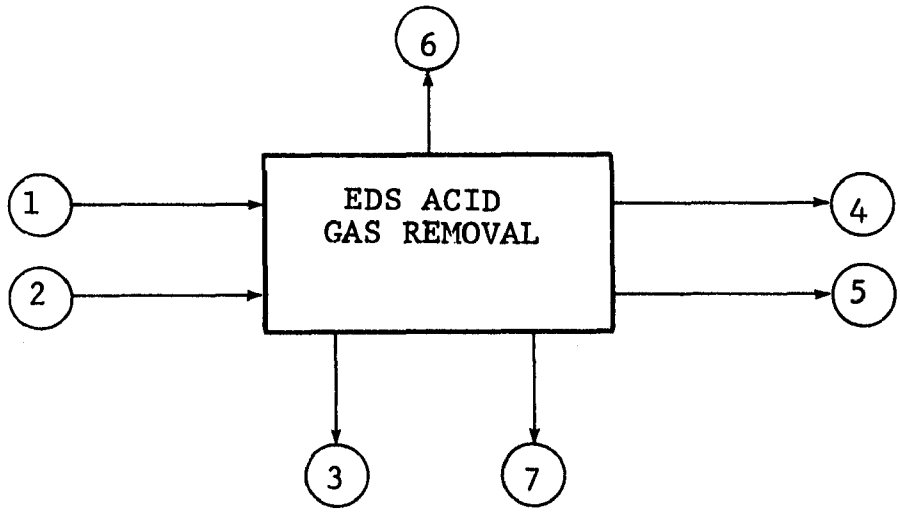

STREAM		METRIC TONS PER DAY
1.	RAW GAS	1,437
2.	MAKE-UP DEA SOLUTION	NOT QUANTIFIED
3.	DEA SOLUTION BLOWDOWN	NOT QUANTIFIED
4.	ACID GAS TO SULFUR RECOVERY	847
5.	FUEL GAS TO STORAGE	590
6.	VAPOR LEAKAGE	NOT QUANTIFIABLE
7.	TRANSIENT SPILLS	NOT QUANTIFIABLE

Figure 37. EDS acid gas removal module process and waste streams

TABLE 51. EDS ACID GAS REMOVAL PROCESS AND WASTE STREAMS (EXTRACTED FROM TABLE 41)

	Stream*	Metric tons per day
1.	Acid gas streams from gas separation, hydrotreating and fractionation modules	1,437
2.	Makeup DEA solution	
3.	DEA solution blowdown	
4.	Acid gas to sulfur recovery**	847
5.	Fuel gas to storage	590

*Refer to Figure 37

**Does not include acid gas treated in hydrogen generation module.

SECTION 6

COMMON OPERATIONS AND PROCESSES

INTRODUCTION

Many of the operations and processes for coal liquefaction are common to all of the three systems covered in this report. These common elements include:

- Coal preparation
- Hydrogen generation
- Oxygen generation
- Steam and power generation
- Cooling towers
- Raw water treatment
- Product and by-product storage

All of the abovementioned, with the exception of hydrogen generation, are given a general treatment in this discussion since only scale-up or scale-down is required for them to be directly applicable to each liquefaction process; however, hydrogen generation, warrants more detailed discussion since it uses liquefaction residues as a raw material; and the carbon, hydrogen, and ash content of these residues varies with each process.

Even though the common operations and processes are presented as separate entities, some of them can be considered

part of the liquefaction operations and probably will be when large-scale plants are built. This is particularly true of hydrogen generation, where it is almost certain that no single hydrogen generation process will be used for all liquefaction systems. Each liquefaction system will most likely develop its own method of hydrogen generation based on individual needs and variables.

COAL PREPARATION

Coal preparation is an established, reliable technology that is in full-scale commercial use in coal-fired power plants. Minor modifications in the module may be made in order to meet the feed requirements of various coal liquefaction processes (e.g., the maximum mesh size below which the coal is pulverized or the maximum moisture content of the coal). Major simplification of the module occurs if a specific liquefaction process does not require coal cleaning with water and can utilize dry processing. However, the more extensive water cleaning procedures are detailed in the following material balances. Major coal liquefaction process waste reductions also occur if the initial coal cleaning takes place outside the plant or at the mine.

The major objectives of coal preparation in a process plant are: 1) sizing coal to meet specific particle size limitations, and 2) drying coal to the specified moisture content. In its basic form, coal preparation includes dry processes, water processes, and dense media processes. Presently, these coal preparation processes rely almost entirely on the difference in the specific gravity between mineral materials and coal as the basic principle by which coal is separated from refuse. One exception is the commonly used Bradford Breaker. This unit relies on the

difference in hardness between rock and coal for its operation. The hard rock does not tend to break and is discharged through the end of the breaker drum and discarded (45).

The more general case, which also includes separation of refuse material and heavy media beneficiation, is described in this section. Dense medium separations include coal preparation processes which clean raw coal by immersing it in a fluid having a density between those of clean coal and reject. As there is a general correlation between ash content and specific gravity, it is possible to achieve the required degree of removal of ash-forming impurities from a raw coal by regulating the specific gravity of the separating fluid. Such processes are utilized when the most rigorous degree of coal beneficiation is desired and can be justified economically. In general, the feed requirements for the coal liquefaction processes do not necessitate the elaborate and expensive dense media coal preparation (45).

The coal preparation module shown in Figure 38 and detailed in this report utilizes water as the primary cleaning medium, in conjunction with a jig-hydrocyclone circuit. Approximately 60 to 70 percent of the pyritic sulfur can be removed during this kind of processing (46). The resulting reduction in mineral and sulfur content is lower than that achieved by heavy media cleaning, but is greater than that resulting from dry methods of sizing and cleaning.

When the liquefaction process does not require significant reduction in ash or sulfur content of the feed coal, dry processing the coal is an alternative to be considered. Table 52 lists some of the general advantages and disadvantages of utilizing water in coal preparation in comparison to dry processes.

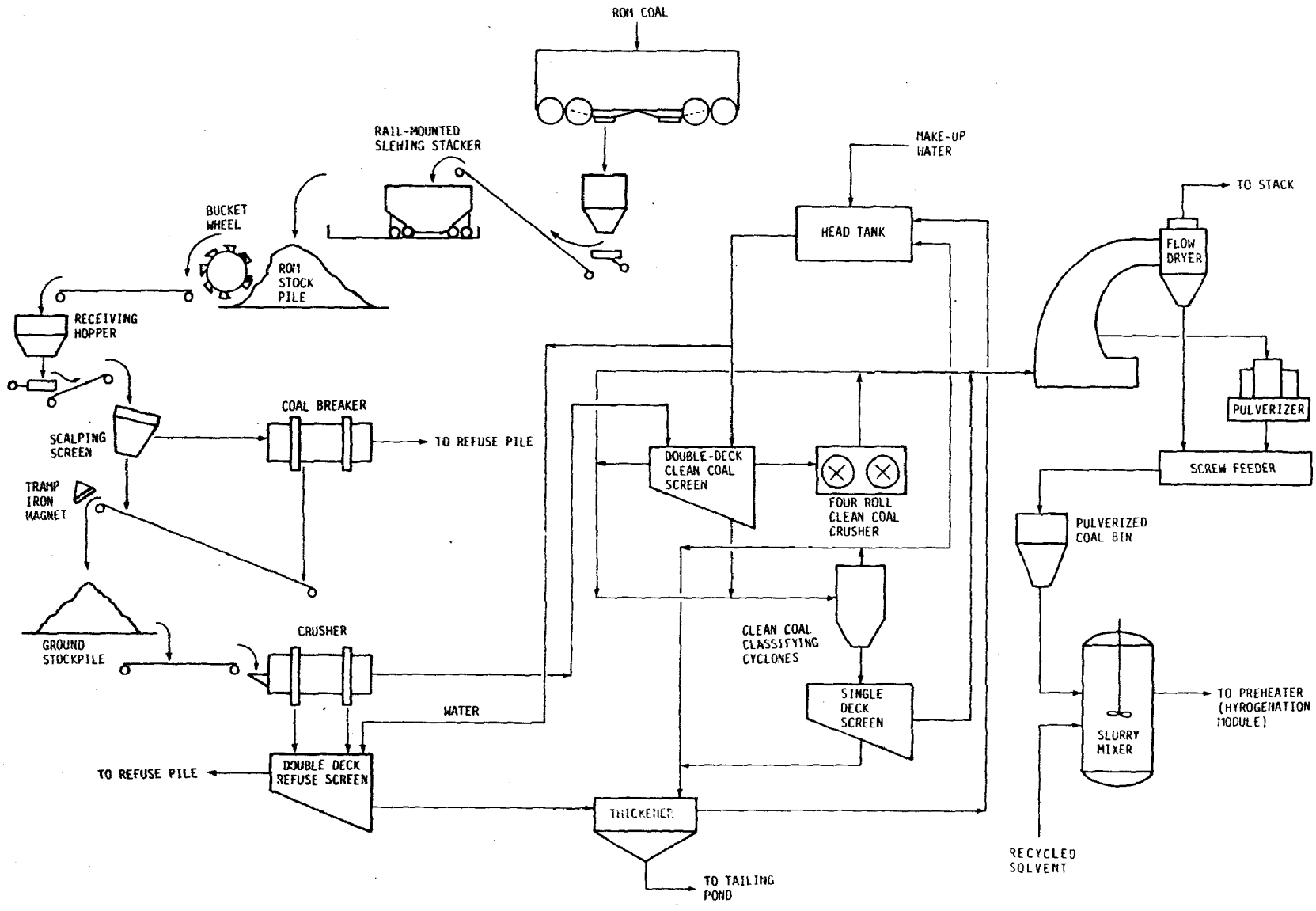

Figure 38. Process schematic - coal preparation module (47)

TABLE 52. COMPARISON OF DRY VERSUS WET COAL CLEANING PROCESSES (45)

	Wet processing	Dry processing
Ash remaining in coal	7%	15%
Pyritic sulfur	reduced 60-70%	Slight reduction
Loss of carbon (heat)	greater	less
Loss of mineral content	greater	less
Thermal energy required for drying	greater	less
Dust particulates	less	greater
Water effluents	greater	less

Process Description

Figure 38 presents a schematic flow diagram of coal preparation facilities. Only the major pieces of equipment are shown. The module receives run-of-mine (ROM) coal and processes it into a feed size suitable for slurry preparation (approximately minus 841 μ). The module can be divided into a number of process steps, i.e., receiving, reclaiming, and rotary breaking; storage, crushing, drying and pulverizing, and slurry mixing. Each step is discussed under separate subheadings. Quantities given under the subheadings are for a 7,950 m^3/day coal liquefaction plant.

Coal Receiving--

ROM coal is dumped from railroad cars into a hopper below rail level. ROM coal can also be received from mine trucks. A vibratory feed transfers the coal from the hopper to a belt conveyor, which in turn transfers it to a rail-mounted slewing stacker. The slewing stacker may move along

the length of a belt, forming a stockpile on one or both sides of the belt. The stockpile will hold 86,000 metric tons of ROM coal, while the stockpiling system will handle up to 1,200 metric tons of ROM coal per hour. This stockpile does not represent total storage capacity, since minus 7.6 cm coal (after reclaiming and crushing) is also stored.

Reclaiming and Rotary Breaking--

Reclaiming coal from the ROM stockpile is accomplished by a bucketwheel system feeding a transverse conveyor to one or two belt conveyors. A transverse conveyor takes the coal from either of the conveyors and delivers it to a 300-ton capacity receiving hopper. The reclaiming system will handle up to 1,200 metric tons of coal per hour. Coal is discharged to a 150 cm reciprocating plate feeder onto a 120 cm belt-driven conveyor, fitted with a magnet to remove tramp iron. The coal is conveyed to a 7.6 cm scalping screen, which separates out oversize coal (plus 7.6 cm) and allows broken coal (minus 7.6 cm) to pass through. The oversize coal is charged to a rotary coal breaker, where it is crushed to less than 7.6 cm. Oversize refuse present in ROM coal is separated. The broken coal is placed on a 120 cm belt conveyor, where it is combined with the undersize coal from the scalping screens and discharged to a 9,100 metric ton storage pile (45,47).

Storage Pile--

Two storage piles are incorporated into the coal preparation module: the ROM stockpile and the broken coal working storage of about 95,000 metric tons of coal. The ROM stockpile represents 30 to 45 days' supply; and, possibly, up to 120 days' supply will be maintained for insurance against interruptions such as labor negotiations. A polymer coating may be applied to the stockpile to minimize oxidation.

Most rainfall coming in contact with such a coating will run off, while only a small percentage will infiltrate. The working storage represents about 2 to 3 days of live storage.

Drying and Pulverizing--

Coal is withdrawn from the minus 7.6 cm ground coal storage pile and conveyed to the washing plant, where a series of jigs, screens, centrifuges, cyclones, and roll crushers clean the coal and reduce it to minus 3.2 cm. Oversize refuse is separated from the coal stream and returned to the mine for disposal. Wet fine refuse is pumped to settling ponds. The clean minus 3.2 cm inch coal is then dried in a flow dryer and reduced in pulverizers.

The pulverized coal is suitable for slurry feed mixing. The size to which the coal is pulverized and the maximum recommended moisture content of the dried coal vary with the liquefaction process. Table 53 shows a comparison of such parameters for the three processes under consideration in this report. Variation in the requirements of the process feed coal could make alternate methods of coal preparation more desirable. For example, the Synthoil process will operate on ROM coal with up to 20 percent ash. Mineral matter in the ROM coals varies with seam and mining methods. Currently, however, most eastern coals, after preliminary mine-mouth cleaning to remove mine debris, contain 12 to 20 percent ash. Such coals could be processed without ash reduction and without water cleaning. Adequate coal preparation would therefore consist of rotary breaking (with removal of rock and tramp iron), crushing and pulverizing to the required mesh size (70 percent minus 0.074 mm), and drying with a stream of hot combustion gas.

TABLE 53. COMPARISON OF THE PROCESS REQUIREMENTS FOR COAL PREPARATION (EXTRACTED FROM SECTIONS 3, 4 AND 5)

	Synthoil	H-Coal	Exxon Donor Solvent
Size of pulverized coal	70% < 74μm 100% < 250 μm	<841 μm	<595 μm
Moisture content of dried pulverized coal	0.5%	2%	1%
Ash content of dried pulverized coal used for process descriptions	16.5%	9.3%	9.5%
Maximum ash with which process will operate	20%	not reported	not reported
Description of coal used	Western Kentucky	Illinois No. 6	Illinois No. 6

Slurry Mixing--

The dried pulverized coal is transferred by conveyer to the coal/solvent tank where it is mixed with the solvent. The resultant slurry, with a weight ratio of approximately 1.8 metric tons of solvent per ton of coal, is then pumped to the preheater.

Process and Waste Streams--

Process and waste streams present within the coal preparation module are designated with respect to the unit operations within the module, as shown in the block flow diagrams for the three priority processes (Figures 39, 40, and 41). The process and waste streams for the Synthoil dry coal preparation are given in Figure 39.

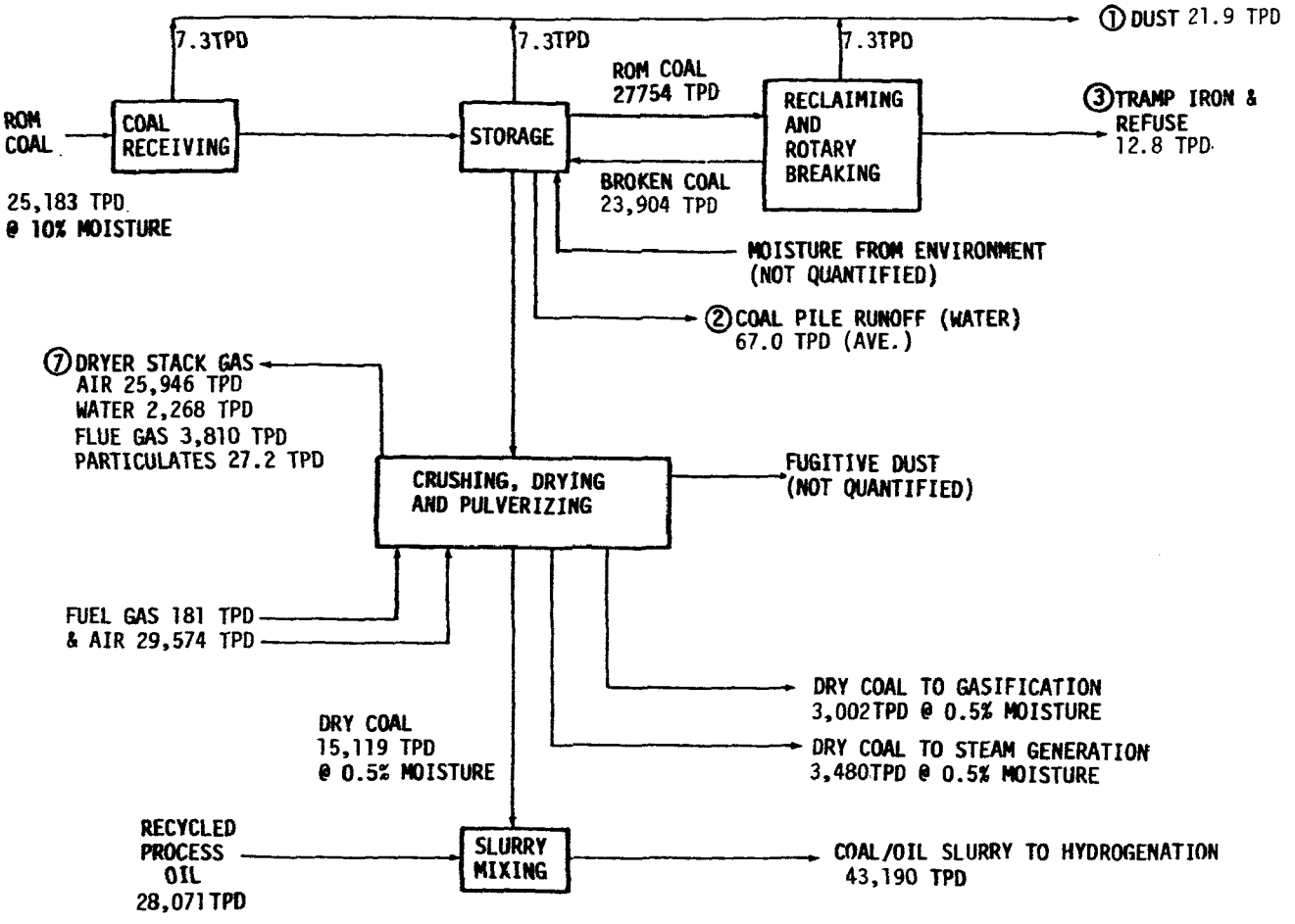

Figure 39. Synthoil process and waste streams from dry coal preparation (see Table 53 for coal description)

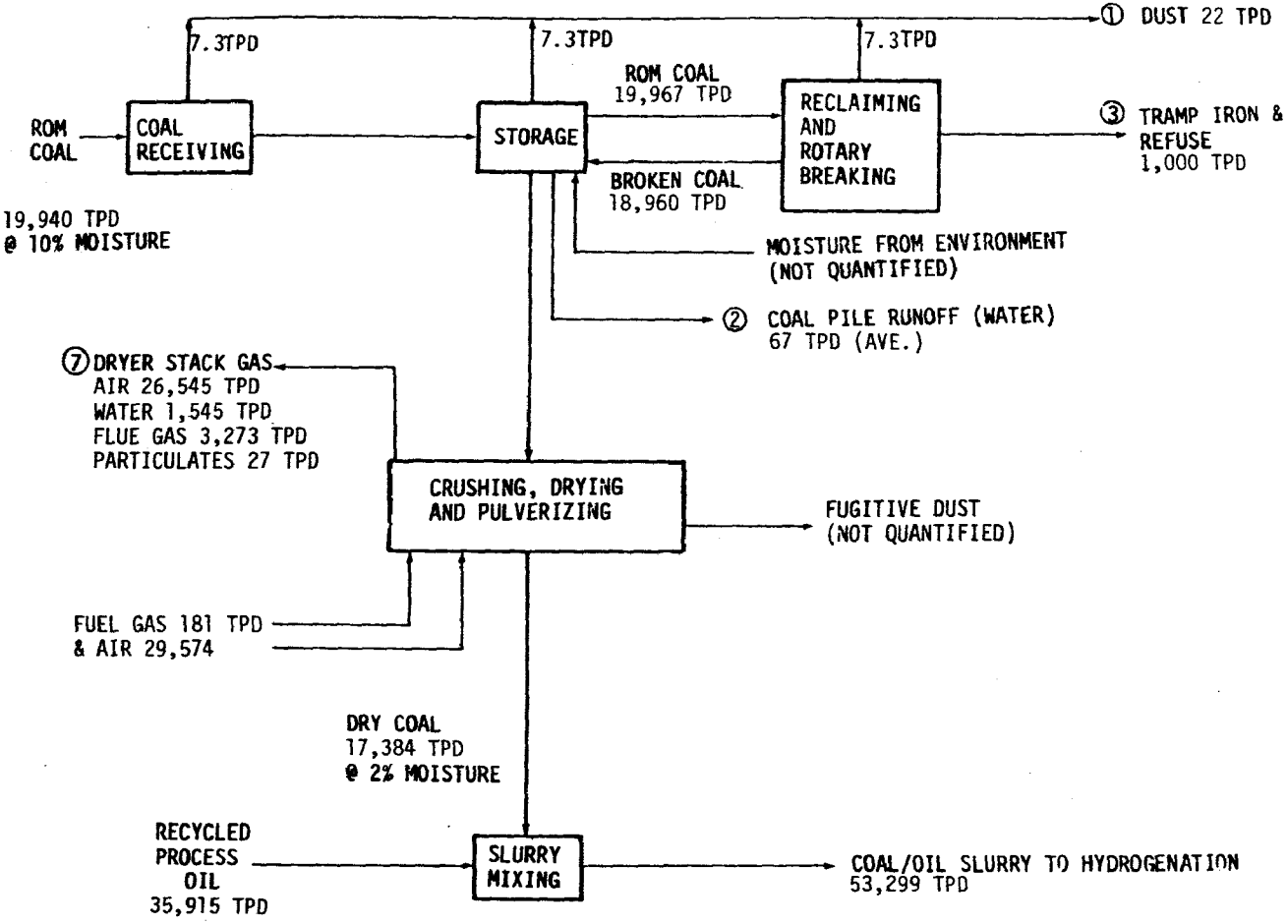

Figure 40. H-Coal process and waste streams from dry coal preparation (see Table 53 for coal description)

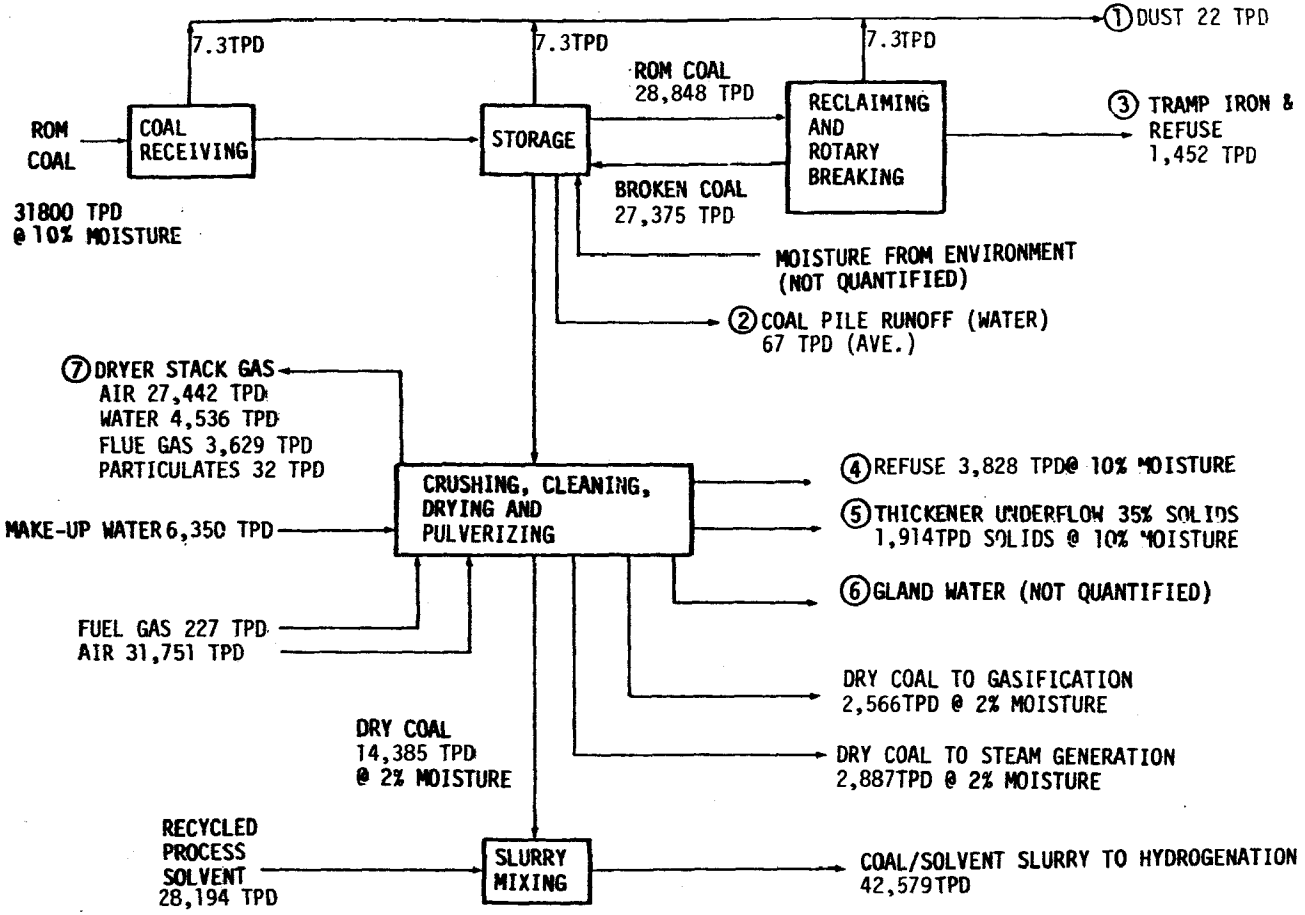

Figure 41. Exxon Donor Solvent process and waste streams from coal preparation (see Table 53 for coal description)

Potentially, the H-Coal process also can operate with a minimum of coal cleaning, and under certain conditions does not require coal washing. The process and waste streams of the dry coal preparation which meet the process requirements of H-Coal process are shown in Figure 40.

The water processing presented in the Exxon Donor Solvent module shown in Figure 41 represents a "worst case" situation with regard to potential environmental effluents from coal preparation. If water is eliminated as an integral part of the coal cleaning, the associated problem of controlling the aqueous effluents is substantially reduced. With dry processing, however, particulate discharge to the environment would be elevated in importance and would require extensive controls.

Waste streams that have been numbered in the block flow diagrams (Figures 39, 40, and 41).

Dust from coal receiving, storage, reclaiming, and crushing--Coal dust is generated during transfer of coal from shipping to receiving bins, and during storage (wind action), conveying, stacking, reclaiming, and crushing operations. Dust is composed of coal particles, typically from 1 to 100 microns, with composition similar to that of the parent coal. Proximate and ultimate analyses of a typical Illinois No. 6 seam coal can be found in Table 54, while an ash analysis is presented in Table 55. A trace element analysis for Illinois No. 6 coal is given in Table 56. Dust generated from the operations above has been estimated at approximately 22 metric tons per day for a 18,200-metric ton per day plant (47).

TABLE 54. RUN-OF-MINE (ROM) ILLINOIS NO. 6 COAL ANALYSIS (47)

Proximate analysis (weight percent):	
Moisture	2.70
Ash	7.13
Volatile matter	38.47
Fixed carbon	51.70
Heating value	29.8 MJ/kg
Ultimate analysis (weight percent):	
Carbon	70.75
Hydrogen	4.69
Nitrogen	1.07
Sulfur	3.38
Oxygen	10.28

TABLE 55. AVERAGE ASH ANALYSIS OF ILLINOIS NO. 6 COAL (46)

Component	Percent of ash
SiO_2	44.4
Al_2O_3	21.0
Fe_2O_3	22.1
TiO_2	1.1
P_2O_5	0.1
CaO	5.2
MgO	1.0
Na_2O	0.5
K_2O	2.0
SO_3	1.7

Coal pile runoff--Coal pile runoff is generated from rainfall and the infiltration waters that come into contact with the stored coal. The resulting leachate may contain oxidation products of metallic sulfides and is frequently acidic, with relatively high concentrations of suspended and dissolved solids, sulfate, iron, calcium, and other coal constituents. The quantity and concentration of coal pile runoff water generated is dependent on the type of coal

TABLE 56. TYPICAL TRACE ELEMENT COMPOSITION * OF ILLINOIS NO. 6 COAL (48)

Name	Symbol	Number of individual analyses	Arithmetic mean	Geometric mean	Unbiased standard deviation	Range	Number of "less than" values
Aluminum	Al	44	13,500.0	13,200.0	3,070.0	10,000-30,400	
Antimony	Sb	44	0.98	0.67	1.03	0.20-4.9	
Arsenic	As	44	5.9	4.1	6.9	1.0-32.0	
Barium	Ba	29	111.0	78.0	135.0	5.0-750.0	
Beryllium	Be	44	1.5	1.4	0.69	0.70-3.9	
Boron	B	35	135.0	126.0	48	34-230	
Bromine	Br	44	15.0	13.0	7.9	1.8-52.0	
Cadmium	Cd	25	4.0	0.69	13.3	0.50-65.0	
Calcium	Ca	44	7,690.0	6,480.0	5,000.0	2,100-26,700	
Cerium	Ce	29	13.0	12.0	5.8	4.4-27.0	
Cesium	Cs	29	1.2	1.1	0.60	0.60-3.6	
Chlorine	Cl	44	1,600.0	900.0	1,600.0	100-5,400.0	
Chromium	Cr	44	20.0	18.0	10.0	7-60	
Cobalt	Co	44	6.6	5.9	3.1	2.5-15	
Copper	Cu	44	13.0	13.0	4.0	6.0-26	
Dysprosium	Dy	29	1.0	1.0	0.26	0.57-1.8	
Europium	Eu	29	0.25	0.24	0.065	0.19-0.40	
Fluorine	F	44	63.0	61.0	18.0	42.0-120.0	
Gallium	Ga	44	3.1	3.0	0.67	1.6-4.5	
Germanium	Ge	44	5.6	3.7	5.3	20-26	10
Hafnium	Hf	29	0.52	0.48	0.21	0.20-1.1	
Indium	In	29	0.14	0.12	0.058	0.10-0.23	11
Iodine	I	29	1.9	1.6	1.2	1.0-5.8	8
Iron	Fe	44	18,600.0	17,600.0	5,900.0	4,500-35,000	
Lanthanum	La	29	7.0	6.8	2.0	4.3-12.0	2
Lead	Pb	44	27.0	14.0	37.0	1.10-210.0	2
Lutetium	Lu	29	0.08	0.07	0.027	0.02-0.15	
Magnesium	Mg	44	510.0	490.0	160.0	200-1,110	
Manganese	Mn	44	53	44	34	13-180.0	
Mercury	Hg	44	0.18	0.16	0.10	0.04-0.52	
Molybdenum	Mo	44	9.2	7.3	6.0	1.0-29.0	1
Nickel	Ni	44	22.0	21.0	8.0	12-42.0	
Phosphorous	P	44	45.0	33.0	44.0	10.0-260	5
Potassium	K	44	1,700.0	1,700.0	270.0	1200-2400	
Rubidium	Rb	29	16.0	15.0	6.7	7.0-42.0	
Samarium	Sm	29	1.2	1.1	0.58	0.78-3.8	
Scandium	Sc	44	2.6	2.6	0.67	1.4-4.1	
Selenium	Sc	44	2.2	2.0	1.2	1.2-7.7	
Silicon	Si	44	26,800.0	26,400.0	4,945.0	18,900-46,300	
Silver	Ag	11	0.03	0.03	0.01	0.02-0.06	
Sodium	Na	44	660.0	510.0	460.0	150-2,000	
Strontium	Sr	29	36	31	24.0	10.0-130.0	2
Tantalum	Ta	29	0.16	0.15	0.063	0.10-0.30	
Thallium	Tl	24	0.67	0.59	0.32	0.12-1.3	
Thorium	Th	29	2.2	2.1	0.66	1.2-3.8	
Tin	Sn	16	4.7	0.94	9.0	0.40-30	10
Terbium	Tb	24	0.17	0.15	0.098	0.04-0.45	
Titanium	Ti	44	700.0	640.0	170.0	500.0-1,500	
Tungsten	W	29	0.70	0.55	0.52	0.04-2.1	
Uranium	U	29	1.6	1.3	1.0	0.50-4.5	2
Vanadium	V	44	33	31	9.7	17.0-55.0	
Ytterbium	Yb	29	0.54	0.51	0.16	0.27-0.89	
Zinc	Zn	44	420.0	120.0	990.0	13.0-5,300	
Zirconium	Zr	35	52.0	46.0	28.0	16.0-120.0	

*Compositions in ppm

used; history of the pile; and the rate, duration, frequency, and pH of precipitation. An analysis of runoff from two coal piles is presented in Table 57.

TABLE 57. CHARACTERISTICS OF COAL PILE RUNOFF (49)

Parameter	Concentration* Plant J	Plant L
Acidity (total) as $CaCO_3$	1,700	270
Chemical oxygen demand	240	350
Conductance, S/cm	2,400	2,100
Dissolved solids (total)	3,200	1,500
Hardness, as $CaCO_3$	600	980
pH, unit	1.2	0.023
Suspended solids (total)	500	810
Turbidity, JTU	300	---
Aluminum	190	---
Arsenic	0.01	0.009
Barium	---	0.1
Beryllium	---	0.01
Cadmium	0.001	0.006
Calcium	240	350
Chromium	0.001	0.006
Copper	0.56	0.18
Iron	510	830
Lead	0.01	0.023
Magnesium	1.2	0.023
Mercury	0.0002	0.027
Nickel	1.7	0.32
Selenium	0.03	0.003
Silicon (dissolved)	91	---
Sodium	---	4.1
Sulfate	2,600	---
Titanium	1	---
Zinc	3.7	1.0

*Concentration in ppm unless otherwise indicated

Assuming a runoff coefficient (fraction of rainfall which will run off the working storage pile rather than permeate it) of 0.7, the daily mass flow rate of coal pile

runoff waters (67 metric tons per day) has been calculated based on the average annual rainfall for Illinois (1.08 m) and the area of the working coal storage (32.4 km^2).

Refuse from reclaiming and rotary breaking--Refuse from the reclaiming and crushing operations is composed chiefly of tramp iron, slate, and coal, and was assumed for material balance purposes to be 5 percent of ROM coal. With the exception of tramp iron, these materials are naturally present in the coal seam. The particle size is greater than three inches.

Refuse from pulverizing and drying--Refuse from pulverizing and drying is generated after screening with the double-decker refuse screen. This stream contains slate, coal, and the water added during screening. Both aforementioned refuse streams are stockpiled before being removed to the mine for burial. The discarded refuse was assumed to be 13.3 percent of the ROM coal which, together with a 6.7 percent discard in the tailing pond (2:1 ratio), constitutes a 20 percent decrease in ROM coal.

Wastewater--Wastewater is generated from a number of unit operations, and has a combined flow of 10,940 metric tons per day. The suspended solids loading is approximately 1,914 metric tons per day which corresponds to a concentration of 35 percent suspended solids. The wastewater is expected to contain a substantial quantity of coal-derived organic constituents prior to wastewater treatment.

Gland water--Gland water is generated from leaks in the piping system. Hence, it has not been quantified. It may contain substantial concentrations of particulate and organic matter. Gland water may be collected in sumps and pumped to treatment.

Gaseous emissions from drying--This waste stream carries 4,536 metric tons per day of moisture, which has been removed from the ground coal during drying. Significant concentrations of coal-derived organics are also expected to be present in this stream. Particulate concentration is expected to be low and subject to control. Flue gas from drying is composed of carbon dioxide, water, nitrogen, and oxygen, with minor amounts of carbon monoxide and unreacted hydrocarbons. The composition of a typical fuel gas and the resultant flue gas is shown in Table 58.

TABLE 58. FUEL AND FLUE GAS COMPOSITIONS FROM THE COAL PREPARATION MODULE (47)

Flue gas to flow dryer	227 metric tons/day
Combustion air	4,536 metric tons/day
Flue gas from flow dryer	4,763 metric tons/day

Composition by weight % of typical fuel gas used in flow dryer

H_2	7.2%
N_2	0.8
CO	12.6
CO_2	1.0
H_2S	0.1
HC	77.5
H_2O	0.8
TOTAL	100%

Composition by weight % of typical flue gas discharged from flow dryer

N_2	75.7%
H_2O	6.9
O_2	5.2
CO_2	12.2
SO_2	0.007
TOTAL	100%

HYDROGEN GENERATION PROCESS

Currently developed pilot plants use natural gas to generate hydrogen. Obviously a full-scale plant could not afford such a luxury.

Most conceptions of full-scale plants envision the generation of hydrogen by the gasification of the carbon-rich residue left over from the liquefaction step. This residue, because of its physical properties and high ash content, may need to be mixed with coal before gasification. Gasification processes that are suited for the production of hydrogen from this residue or residue/coal mixture include the BIGAS, Texaco Partial Oxidation, and the Koppers-Totzek. The Koppers-Totzek process was selected for use in this study for several reasons:

- Unlike the Texaco Partial Oxidation and the BIGAS processes, the Koppers gasifier is a proven commercial process (in continuous use since 1951). More operating data are available for the Koppers process than for any other.

- The Koppers process uses an entrained bed reactor, and has a high throughput, which minimizes the number of reactors that must be constructed.

- Due to the high reaction temperature, inert residues such as chars can be gasified.

- The process is simple and relatively clean; no tar, oils, or phenol is produced.

This is not to say that the Koppers process will actually be used in full-scale plants, or that plans are being made to use it for hydrogen generation. The process simply formed a convenient basis for estimating the types of waste products to be expected from gasifiers in general. The scope and size of this report do not justify a detailed comparison of the different available gasification processes.

Process Description

A flow diagram of a conceptualized Koppers-Totzek process is shown in Figure 42. Numerous pollution control devices are used to purify the hydrogen gas stream prior to its distribution, including acid gas removal, which may be a separate system from that used for removal of acid gases from the main liquefaction process stream. The gasifier operating conditions are 1830 to 1930°C and 101 kPa.

A mixture of hydrogen, carbon monoxide, carbon dioxide, hydrogen sulfide, water, and other trace gases leave the gasifier. Approximately 50 percent of the slag produced in the gasifier is carried along with the product gas. The remainder drops to the bottom of the gasifier where it is water quenched. The high temperature gasifier product gas produces steam in a waste heat boiler prior to entering a venturi scrubber. Cooling water is introduced into the scrubber to remove more than 99 percent of the remaining slag from the product gas.

The scrubber slag slurry is then mixed with the slag from the gasifier, and the resulting mixture is concentrated in a clarifier prior to removal to a landfill. The bulk of the water from the clarifier is recycled to the scrubbers. Clarifier overflow is sent to the cooling tower circuits.

The gas is then water quenched to remove impurities such as acids, ammonia, hydrogen sulfide, carbon dioxide, and additional entrained slag. The sour water stream is sent to wastewater treatment.

The quench tower effluent stream is further processed by the water gas shift. Temperatures and pressures in the shift reactor are expected to range from 340 to 370°C and 0.96 to 9.6 MPa, tending to increase the amount of hydrogen present in the product gas stream. Shifting is aided by a catalyst.

A knockout drum, operating at reduced pressure after use of the shift converter, causes water vapor and other condensable vapors to drop out of the gas stream. An amine scrubbing process removes both hydrogen sulfide and carbon dioxide from the product gas stream. Should entrained particulates still be present in the gas stream, they will be removed by the amine scrubber and will exit in the blow-down stream. Product gas from the MEA unit is sent to another MEA unit to remove additional carbon dioxide, thereby increasing the hydrogen concentration of the final product gas. Figure 42 combines both MEA units into one symbol.

The acid gases removed from the process are sent to the sulfur recovery unit. The CO_2 removed in the MEA units is vented to the atmosphere. The clean product gas is then compressed and distributed.

Process and Waste Streams

Figure 43 shows overall process and waste streams. Material inventories for these streams are given in Tables 59, 60, and 61 for the Synthoil, H-Coal, and EDS processes,

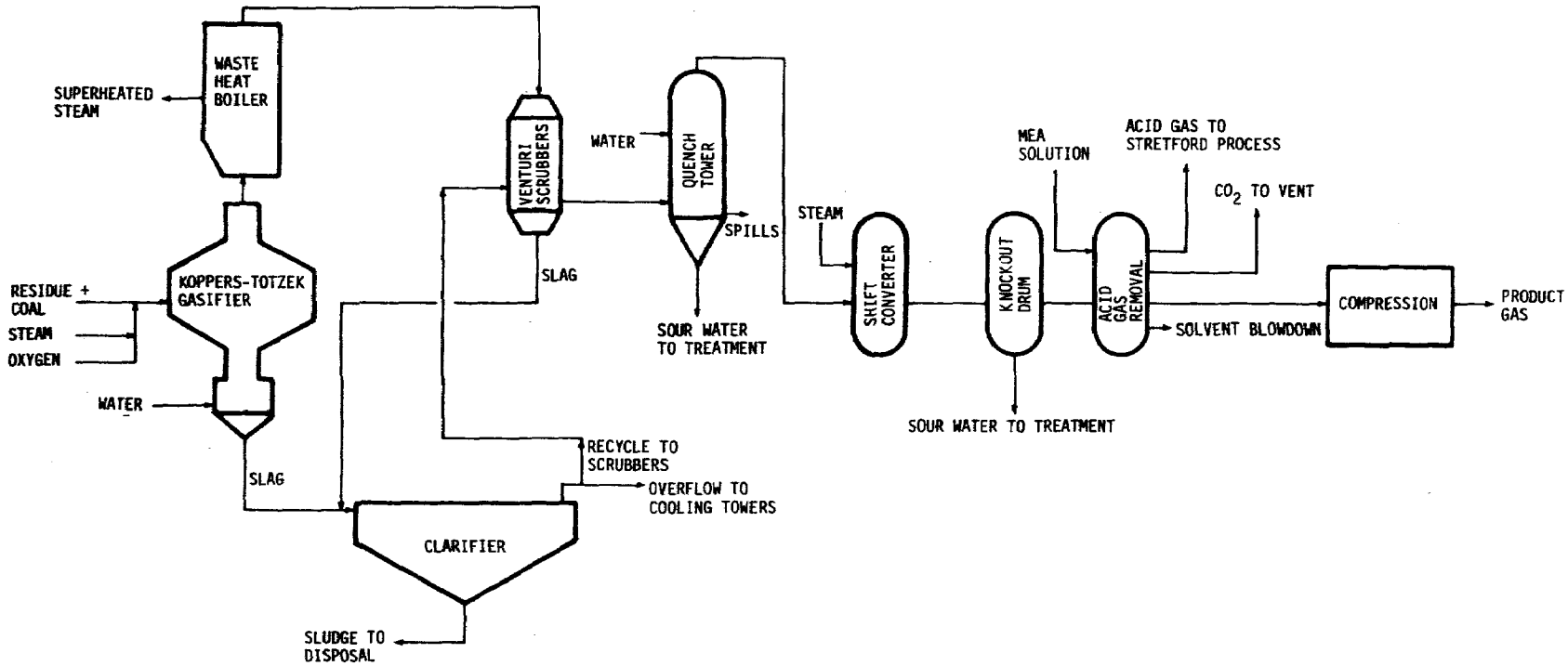

Figure 42. Hydrogen generation using Koppers-Totzek Process (K-T brochure)

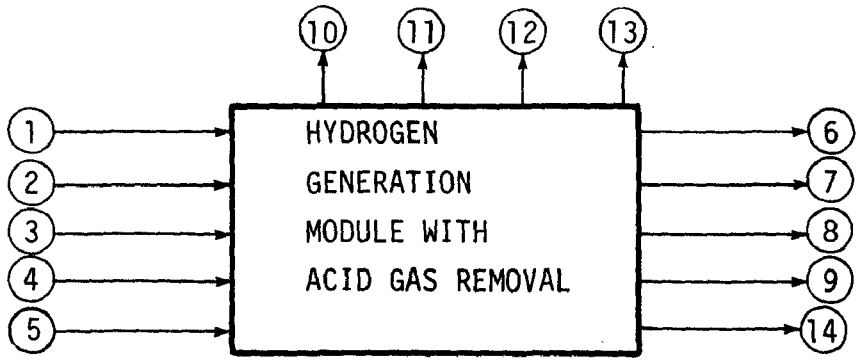

		METRIC TONS PER DAY		
	STREAM	SYNTHOIL	H-COAL	EDS
1.	RESIDUE & COAL	6,004	4,266	4,394
2.	OXYGEN	3,514	3,540	2,572
3.	STEAM	4,991	6,321	3,683
4.	WATER	1,340	873	982
5.	MEA SOLUTION	1	1	1
6.	SLUDGE	3,527	1,932	2,581
7.	SOUR WATER	1,150	1,204	841
8.	BLOWDOWN	5	5	4
9.	CLARIFIER OVERFLOW	235	419	172
10.	ACID GAS	8,432	8,932	6,246
11.	CO_2	1,001	1,049	733
12.	PRODUCT GAS	1,377	1,405	1,376
13.	VAPOR LEAKAGE	NOT QUANTIFIABLE		
14.	TRANSIENT SPILLS	NOT QUANTIFIABLE		

Figure 43. Hydrogen generation module with acid gas removal process and waste streams

TABLE 59. SYNTHOIL HYDROGEN GENERATION MODULE PROCESS AND WASTE STREAMS (EXTRACTED FROM TABLE 15)

Stream		Metric Tons Per/Day
1	Residue	3,002
	Coal	3,002
		6,004
2	Oxygen	3,514
3	Steam	
	To gasifier	631
	To shift converter	4,360
		4,991
4	Water	
	To gasifier slag quench	1,063
	Water scrub quench	273
	In MEA solution	4
		1,340
5	MEA solution	
	MEA	0.858
	Polyrad	0.004
	Alcohol	0.011
		0.873
6	Sludge from clarifier	
	Water	1,411
	Solids	2,116
		3,527
7	Sour water	
	Quench operation	274
	Knockout drum	876
		1,150
8	Solvent blowdown	4.8
9	Clarifier overflow	235
10	Acid gas	
	H_2S	33.3
	CO_2	8,347
	SO_2	0.21
	HCN	1.99
	NO	0.008
	NH_3	.91
	N_2	48.2
		8,431.6
11	CO_2 from acid gas removal	1,001
12	Product gas	
	H_2	603
	CO	603
	N_2	34.3
	CO_2	136
	H_2S	0.536
		1,376.8

TABLE 60. H-COAL HYDROGEN GENERATION MODULE PROCESS AND WASTE STREAMS (EXTRACTED FROM TABLE 29)

Stream		Metric Tons Per/Day
1	Residue	4,266
2	Oxygen	3,540
3	Steam	
	To gasifier	1,756
	To shift converter	4,565
		6,321
4	Water	
	To gasifier slag quench	582
	Water scrub quench	287
	In MEA solution	4.1
		873.1
5	MEA solution	
	MEA	0.90
	Polyrad	0.004
		0.012
		.92
6	Sludge from clarifier	
	Water	773
	Solids	1,159
		1,932
7	Sour water	
	Quench operation	287
	Knockout drum	917
		1,204
8	Solvent blowdown	5.03
9	Clarifier overflow	419
10	Acid gas	
	H_2S	139.5
	CO_2	8,739
	SO_2	0.22
	HCN	2.08
	NO	0.008
	NH_3	.95
	N_2	50.51
		8,932.2
11	CO_2 from acid gas removal	1,049
12	Product Gas	
	H_2	631
	CO	631
	N2	142.9
	CO_2	0.5
		1,405.4

TABLE 61. EXXON DONOR SOLVENT HYDROGEN GENERATION MODULE PROCESS AND WASTE STREAMS (EXTRACTED FROM TABLE 41)

Stream		Metric Tons Per/Day
1	Residue and coal	
	Residue	2,197
	Coal	2,197
		4,394
2	Oxygen	2,572
3	Steam	
	To gasifier	3,191.7
	To shift converter	3,191.7
		6,383.4
4	Water	
	To gasifier slag quench	778.3
	Water scrub quench	200.4
	In MEA solution	2.9
		981.6
5	MEA Solution	
	MEA	0.628
	Polyrad	0.0029
	Alcohol	0.0079
		0.6388
6	Sludge from clarifier	
	Water	1,032
	Solids	1,549
		2,581
7	Sour water	
	Quench operation	200.4
	Knockout drum	640.9
		841.3
8	Solvent blowdown	3.51
9	Clarifier overflow	172.0
10	Acid gas	
	H_2S	97.5
	CO_2	6,110.4
	SO_2	0.15
	HCN	1.45
	NO	0.0057
	NH_3	0.664
	N_2	35.32
		6,245.5
11	CO_2 from acid gas removal	733.1
12	Product gas	
	H_2	441.5
	CO	416.5
	N_2	25.1
	CO_2	100.2
	H_2S	393
		1,376.3

respectively. The inventories for the Synthoil process were based on 603 metric tons per day of product hydrogen, 631 metric tons per day for the H-Coal process, and 442 metric tons per day for the EDS process.

The degree to which the liquefaction residues are amenable to gasification was a major consideration in setting the stream compositions. The Koppers Company is currently investigating this question, but results are not yet available. A major problem with gasifying liquefaction residues is that the mineral matter content of the residue may be too high to permit satisfactory operation of the gasifier. For operating under these conditions, a one-to-one mixture of coal and residue has been suggested (50).

Another problem stems from the possibility of using pyrolysis or coking to recover oil from the Synthoil and EDS residues. Oil recovery would significantly reduce the carbon content of the residue while raising its ash content. It has been assumed that the EDS and Synthoil residues will need to be mixed with coal, while the H-Coal residue, because of its high carbon content (70.2 percent), and relatively low ash content (27.3 percent), can be gasified by itself.

The numbers presented were obtained by extrapolating figures from References 47, 51, and 52. Steam and oxygen requirements for the gasifier were calculated by performing a carbon and hydrogen mass balance around the gasifier. The carbon, hydrogen, and ash content of the Synthoil residue were taken from Reference 53, which gives an analysis of the residue after pyrolysis for 20 minutes at 305°C. Because of the lack of any information on the EDS coking operation, the EDS residue was assumed to have a composition similar to that of the Synthoil residue.

It should be noted that, for all processes, excess residue that cannot be gasified will need to be either disposed of by landfill or utilized for its heating value. Table 62 presents the quantities of residue and coal used for each process, and the quantities of residue left. Calculations for the EDS process assume that 50 weight percent of the tar in the residue will volatilize during the coking operation.

TABLE 62. UTILIZATION OF LIQUEFACTION RESIDUES

Process	Residue produced	Residue to gasifier	Coal to gasifier	Residue left	Reference
Synthoil	175	3002	3002	173	Table 15
H-Coal	5710	4226	0	1421	Table 29
Exxon Donor Solvent	4305	2197	2197	2107	Table 41

Values in metric tons per day

Several water and gaseous waste streams are discharged during the process. They are as follows:

- Sour water streams are discharged continuously from the knockout drum and quench tower. These streams may contain ammonia and oils, with the quench tower waste containing higher quantities. Both of these streams are directed to treatment.

- Hydrogen sulfide and carbon dioxide are discharged from an acid gas removal unit to the Stretford process. Other impurities such as sulfur dioxide,

hydrogen cyanide, nitrous oxides, and ammonia are also discharged along with the hydrogen sulfide and carbon dioxide. The MEA solvent blowdown from this operation either may be distilled to recover chemicals, or it may be disposed of by incineration.

- Spent catalyst is occasionally discharged from the shift converter to a regeneration operation.

- Slag, removed from the gasifier and venturi scrubbers, is concentrated in a clarifier for disposal. Water is recirculated from the clarifier to the venturi scrubbers, while excess clarifier overflow is returned to the cooling tower circuit.

- Other discharges from the hydrogen production area include hydrocarbon vapor leakage and spills in the vicinity of the quench tower.

OXYGEN GENERATION PROCESS

Process Description

Hydrogen production in all three liquefaction processes requires large quantities of oxygen which must be produced on site. A cryogenic air separation system, consisting of air compression, cooling and purification, air separation by distillation, and oxygen compression, is normally used to produce the oxygen at the conditions required. Figure 44 depicts a commercial air separation system (54).

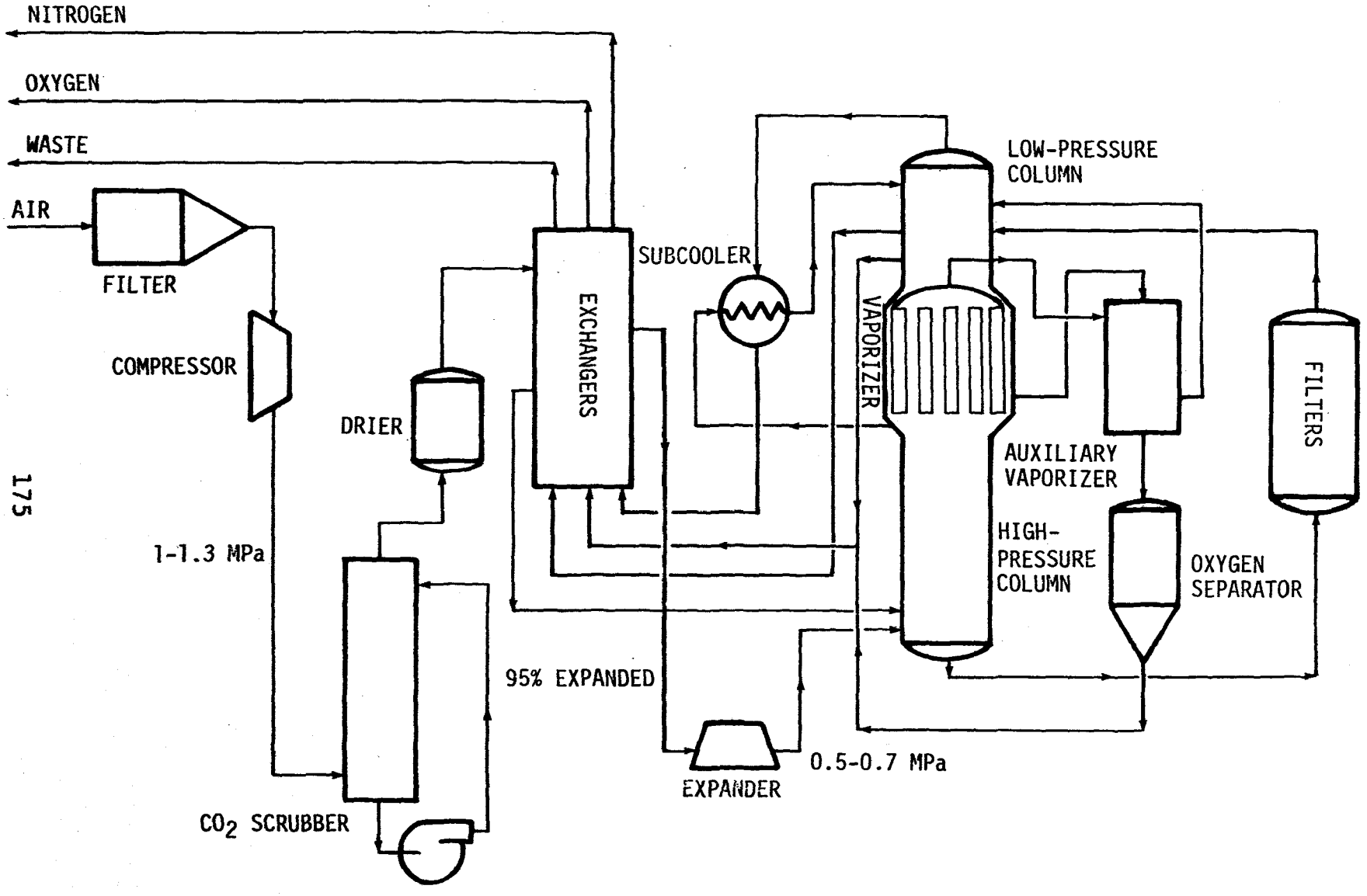

Figure 44. Oxygen generation facilities (American Air Linde, Inc.) (54)

The entering air is filtered, compressed, and scrubbed with MEA to remove CO_2 and dust. The purified air is cooled by heat exchange with the outgoing gaseous products (oxygen, nitrogen, and waste gas). Most of the air stream is then expanded causing the temperature to drop nearly to the dew point of the gas (-170°C). The cooled gas enters the combined liquefier-distillation chamber where the temperature is lowered to about -193°C and the liquid oxygen and nitrogen are separated. The products are returned to the heat exchanger. Most of the nitrogen is discharged as a waste product along with carbon dioxide, argon, xenon, radon, krypton, and water vapor. The purified oxygen is compressed, cooled, and forwarded to the gasifiers (54).

Process and Waste Streams

Only one waste stream, primarily containing nitrogen, is discharged from the oxygen production process. This stream is of the following composition:

Component	Weight percent
Nitrogen	98.0
Argon	1.3
Carbon dioxide	0.065
Hydrogen	0.013
Neon, xenon, krypton	0.065
Water	0.54

This waste gas will be discharged at a rate of about 3.2 metric tons per metric ton of oxygen produced. The average oxygen demand of the three liquefaction processes is 3,334 metric tons per day.

STEAM AND POWER GENERATION PROCESSES

Process Description

Large quantities of steam and electricity are required by the liquefaction processes. Electric power may be generated on site but, more likely, will be purchased. Steam will almost always be produced on-site. In the following discussion, it has been assumed that both steam and electricity will be produced at the site of the liquefaction plant.

Low pressure steam may be produced indirectly in waste heat boilers located throughout the plants. This reduces the volume of steam which must be produced and provides a means of cooling hot effluents from various unit operations. Although much of the low pressure steam requirements may be met in this manner, high pressure steam and some low pressure steam will need to be produced by a coal-fired boiler.

Most steam produced in the plant is condensed and recycled to the boilers in a closed circuit for reuse. In some instances, however, steam is introduced directly into reactor vessels where it becomes part of the process stream. Makeup water, therefore, must be continuously added to the steam generating facilities.

Typical steam and electrical power generation facilities are shown in Figure 45. Although separate boilers will be used for steam generation and electricity production, the process diagrams are the same except for the destination of the steam.

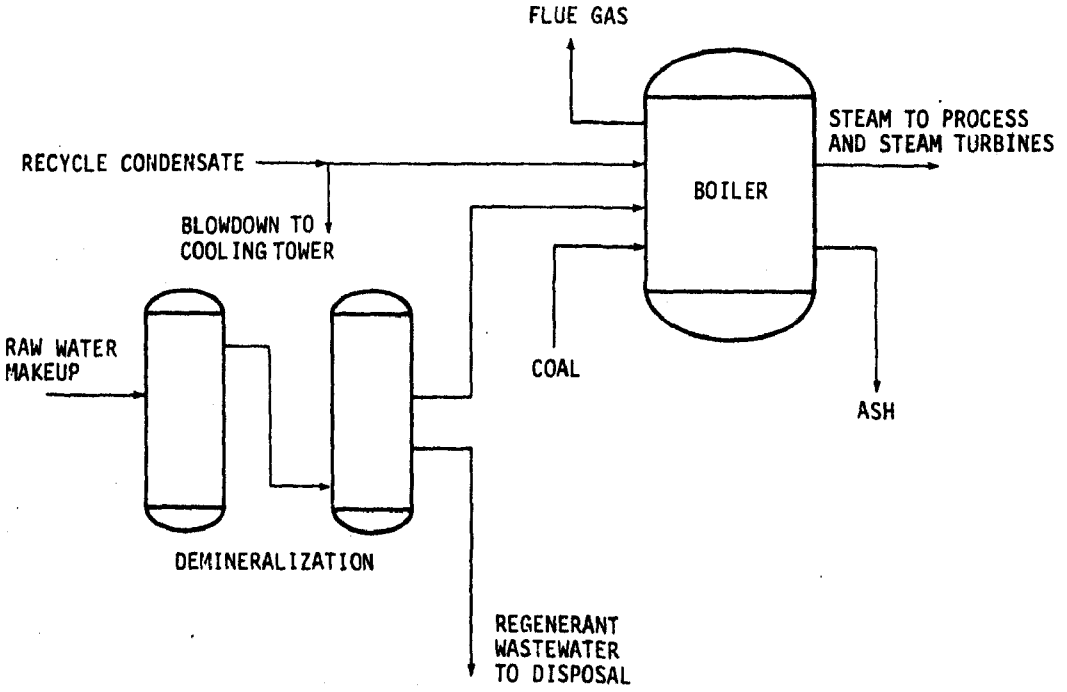

Figure 45. Steam generation with coal-fired boilers (55)

Process and Waste Streams

Since boiler water must be of high purity, raw makeup water is demineralized prior to entering the boiler water circuit. If needed to maintain relatively low concentrations of dissolved solids in the circuit, a blowdown stream is continuously discharged. This stream is directed to the cooling tower system. Blowdown rates are as much as 33 litres per metric ton of steam generated (55). High pressure boilers used for electricity generation will have higher blowdown rates than boilers used for process steam. Wastes from demineralizer regeneration range from 8 to 50 litres per metric ton of water treated (51), which is about 3 to 17 litres per metric ton of steam produced. Each liquefaction process requires approximately 725 metric tons of steam and an electrical generating capacity of about 360 TJ. This is a total requirement of about 980 metric tons of steam. Based on this steam production rate, boiler blowdown will be as much as 785 metric tons per day and demineralizer regeneration wastes will range from 195-1180 metric tons per day.

The major waste streams from steam and electricity production are flue gases, fly ash, and bottom ash. If feed coal is burned to produce steam and power, these streams will be relatively large, since all three processes use high sulfur and ash coals. Assuming that the coal heating value is 26 MJ/kg, 725 metric tons of steam per hour requires 2,510 metric tons of coal per day while 360 TJ of electricity requires 980 metric tons of coal per day. Assuming a sulfur and ash content for the dry coal of 5 percent and 10 percent respectively, 345 metric tons per day of sulfur dioxide and 348 metric tons per day of ash will be generated. If a lime scrubbing system is installed, an extrapolation of available

data (56) shows that 1,180 metric tons per day of sludge will be produced. It should be noted that in some instances it may be more desirable to burn the liquefaction product rather than coal. In this case, quantities of waste products will be drastically reduced.

COOLING TOWERS

Process Description

Cooling water is an essential component of a coal liquefaction plant in that it is continuously needed to maintain temperatures of vessels within the plant and to cool various process streams. Cooling towers provide a continuous supply of water suitable for cooling. In addition to the basic cooling tower structure, piping and other components, water treatment facilities are essential elements of the cooling tower system since the effective operation of towers can only be maintained by recirculating relatively clean water. A flow diagram of typical cooling water facilities system is shown in Figure 46.

Process and Waste Streams

Cooling water is directed from the cooling tower through closed piping to plant heat exchangers. Before recirculation back to the cooling tower, a portion of the cooling water is directed through a sidestream treatment operation (blowdown). This is incorporated into the process to maintain a constant level of dissolved solids in the recirculating cooling water stream. With sidestream treatment, typical blowdown rates are 3-5 percent of the makeup water rate. Side stream treatment facilities commonly used are reverse osmosis, electrodialysis, or ion exchange. The

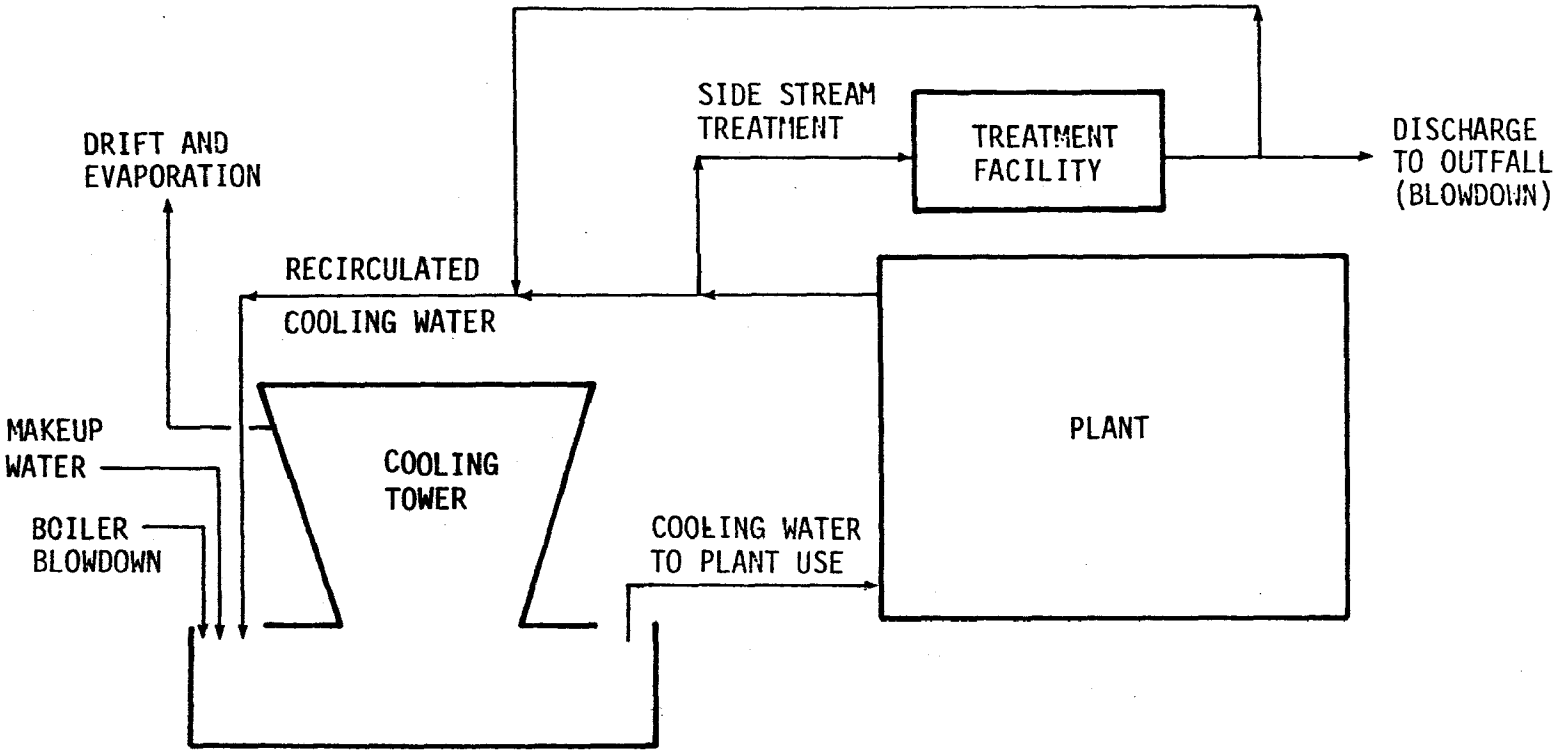

Figure 46. Cooling water facilities

wastewater from the treatment process is generally discharged.

Raw water is added to the cooling tower influent as makeup water. It replaces the water lost by evaporation, by cooling tower blowdown, and through leakage. Evaporation represents the most significant loss of cooling water in the system.

Based on 22,680 metric tons per day of cooling tower makeup, cooling tower blowdown will be approximately 1135 tons per day.* This waste will contain suspended solids, dissolved solids, biocides, and other trace metals. Evaporation may be taken as the difference between makeup and blowdown, or about 21,590 metric tons per day.

RAW WATER TREATMENT

Process Description

A continuous supply of water is needed in the liquefaction process as makeup water in the cooling towers and in boiler feedwater softening and demineralization operations. In addition, the Synthoil and H-Coal processes inject water for process needs. Water is also needed in the waste disposal treatment facilities and for potable and fire uses. Water usage is dependent upon the size of the plant, housekeeping practices, process operations, and pollution control technologies. A typical raw water treatment system is shown in Figure 47.

*Assuming 5% makeup.

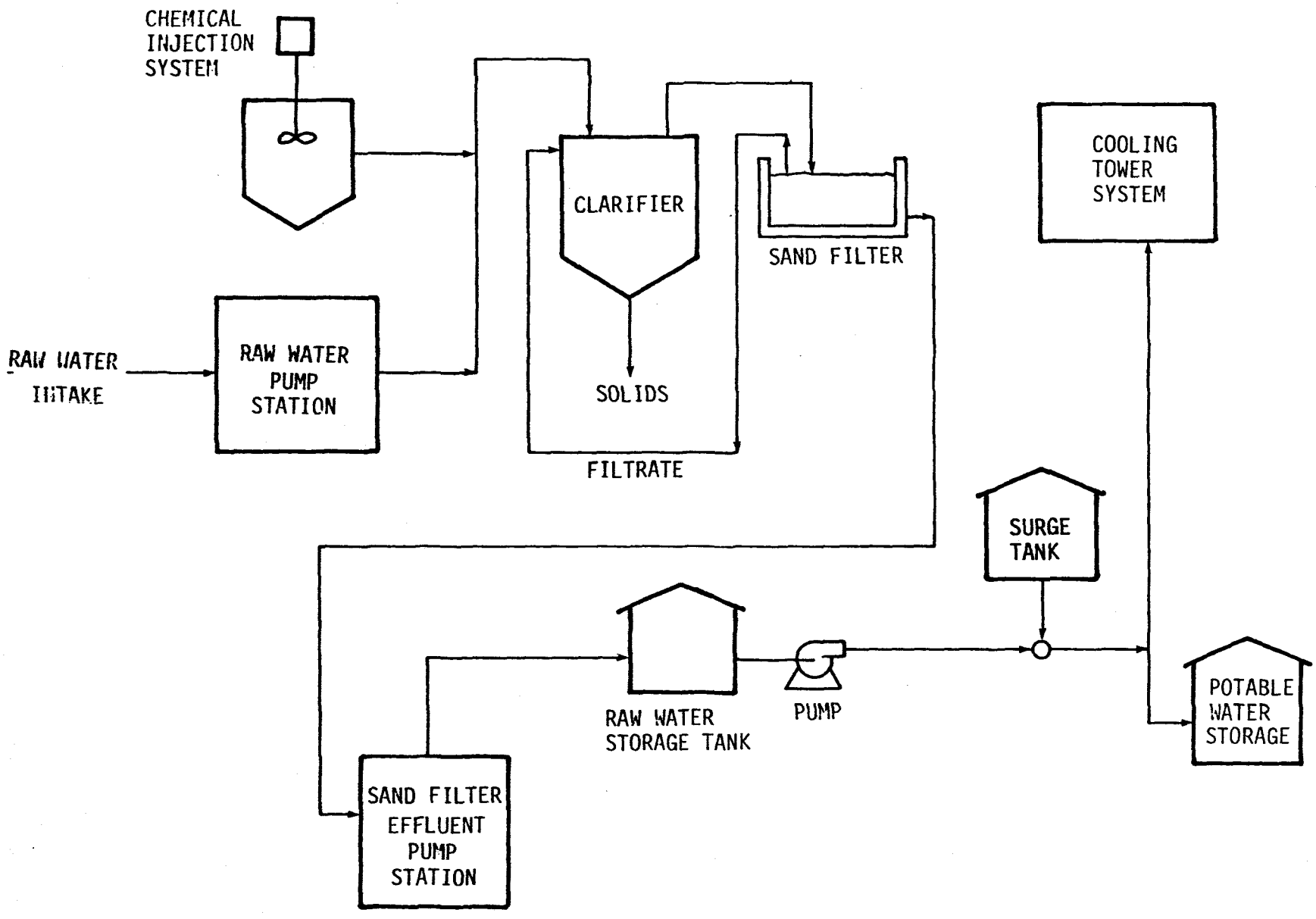

Figure 47. Raw water treatment

Process and Waste Streams

Raw water is pumped to a treatment plant after being screened to remove debris. Chemicals are then added to the raw water in a rapid mix chamber to aid in settling out suspended matter and heavy metals in subsequent flocculation, sedimentation, and filtration unit operations. Softening agents are also added in the rapid mix chambers. The water goes to sand filters and then to a clear well where it is lifted to a raw water storage tank. Water is pumped from the storage tank to the cooling towers and potable water storage area as needed. Chlorination injection facilities are located at the potable water storage.

The major waste stream discharged from the raw water treatment facility is sludge removed from the clarifiers. This sludge contains metal complexes, lime, carbonate compounds, suspended solids, and other trace compounds which were present in the raw water. The amount of lime and other chemicals added to the clarifier depends largely on the quality of the intake water. Consequently, the amount of sludge generated will vary significantly. A raw water typically found in the Midwest contains about 360 ppm of dissolved solids, 40 of suspended solids, and 240 ppm of hardness. About 10 metric tons of sludge will be produced for every thousand metric tons of this water that is treated. Based on typical water requirements of 27,200 metric tons per day for the liquefaction processes, about 272 metric tons per day of sludge can be expected.

PRODUCT AND BY-PRODUCT STORAGE

There are a number of products and by-products stored on-site including naphtha, fuel oils, sulfur, ammonia, and

phenols. Fuel gas is also produced but it does not need storage. As it is produced, it is sent directly to a gas pipeline grid for distribution or burned internally in direct-fired heaters in the liquefaction plants.

All storage tanks have gas vents which return hydrocarbon vapors to the gas purification area. This system prevents hydrocarbon vapor leakage in the storage area. No other emissions occur except in cases of accidents. Various by-products such as sulfur, ammonia, and phenols are removed from process waste streams, purified, and also sent to storage. Ammonia and phenols are stored in tanks, and sulfur is stored outdoors in piles.

SECTION 7

TREATMENT AND CONTROL TECHNOLOGY

INTRODUCTION

Treatment and control technologies are applied to either process or effluent streams of liquefaction processes. The objective is to permit the fullest utilization of all the recoverable products and by-products while controlling environmental pollution within acceptable levels. Because of them the Synthoil, H-Coal, and EDS coal liquefaction processes should be able to meet acceptable environmental performance criteria while converting coal to a convenient energy source.

The waste streams exiting the Synthoil, H-Coal, and EDS processes are shown in Table 63. The air emissions, wastewaters, and solid wastes are similar in that control technologies must be specified to control effluent components common to each of the processes. A brief description follows of the generalized waste types encountered, including common components requiring control.

TABLE 63. WASTE STREAMS FROM H-COAL, SYNTHOIL, AND EDS PROCESSES* (EXTRACTED FROM TABLES 15, 29, AND 41)

Stream	H-Coal	Synthoil	EDS
Sour water	5,780	4,710	1,805***
Solids residue & char	1,480	1,190	2,106
Flue gases	8,190	Not quantified	Not quantified
Sludge (slag or ash and water)	1,930	3,525	2,580
Acid gases	10,130	10,195	6,550
Spent catalysts	8	Not quantified	Not quantified
MEA solvent blowdown	Not quantified	15	Not quantified
Particulates (coal preparation)**	260	260	229

* All values are in metric tons per day and are extracted from the section dealing with the respective process.
** Before treatment
***Does not include sour water from hydrogen generation. This value should be considered as a rough estimate and may be at least twice as great when all sour water streams are identified.

Gaseous Emissions

- Emissions from coal preparation: Particulate emissions enter the atmosphere as a result of coal cleaning and sizing operations. Coal drying is performed by passing hot flue gas over the coal. The drying may result in volatilization of some light organic components of the coal. Additional particulate matter may become suspended in the flue gas.

- Raw product gas from hydrogenation generation: This gas, the raw product gas from the Koppers-Totzek gasifier, contains entrained particulates which should be removed prior to acid gas removal.

- Acid gases: Hydrogen sulfide is the primary constituent, although organic sulfur gases such as carbonyl sulfide and carbon disulfide may be present. Acid gases are generated in the gas separation and hydrogen generation modules and will be stripped from sour waters in the ammonia recovery units.

- Combustion gases from heaters, preheaters and boilers: These units burn fossil fuels to provide energy inputs to liquefaction process operations. Possible emissions requiring control include sulfur oxides, nitrogen oxides, carbon monoxide, and particulates, depending upon the fossil fuel type combusted.

- Miscellaneous emissions: This includes transient emissions during process startup or shutdown, leaks or other fugitive emissions, and process vents, such as the vent gases from solids-liquid separation in the H-Coal process.

Wastewater Effluents

- Wastewater from gas separation: The liquid product from the reactor is flashed in gas separators. The vapors released are condensed and a wastewater stream having dissolved ammonia, hydrogen sulfide, phenols, and light hydrocarbons is generated.

- Wastewater from solids separation: A wastewater stream contaminated mainly with light oil, some dissolved organics, and gases is generated from solids separation units.

- Wastewater from fractionation: Separation of liquid products is carried out by fractionation. Some light oils and hydrocarbons may enter the condensed water stream. Small amounts of hydrogen sulfide and ammonia will also be present.

- Wastewater from hydrogen generation: A mixture of coal and solids residue from solids separation is gasified in the Koppers-Totzek or an alternate gasifier. The gasifier operates at a high temperature which eliminates the presence of organics in the raw gas. The raw gas, however, is quenched with water which contains dissolved gases such as hydrogen sulfide and carbon dioxide.

Solid Wastes

Of the many waste streams rejected from various coal liquefaction modules, five basic types of solid wastes can be identified. These are particulate coal, ash and slag residues, char and other organic-containing residues, spent catalyst, and spent absorbents. Particulate coal is generated in the coal preparation module of each liquefaction process. Coal dust particles are generated in coal processing. Unreacted coal particles are present in the waste streams from process modules as well. Ash and slag residues consist primarily of metallic oxides, compounds of silicon, aluminum, calcium, iron, magnesium, titanium, sodium, potassium, and nickel. A variety of trace elements are present. Char and other organic residues, although conceptually utilized as fuel and to synthesize other process reactants, exit certain modules as waste. Spent catalyst is periodically discharged from modules utilizing them, as are spent absorbents from modules which use absorbents to protect catalysts from acid gases.

Control technologies themselves will generate solids waste streams, including limestone sludges from sulfur dioxide removal systems and water treatment sludges. Calcium sulfite and calcium sulfate are the primary components of limestone sludges. The wastewater sludges will consist primarily of coal tars, sand, coal fines, and water treatment by-products.

AIR POLLUTION CONTROL TECHNOLOGY

Table 64 lists some control technologies applicable to the treatment of emissions to air. Some of the technologies with possible application to coal liquefaction technology are discussed in the following subsections. Reference 57 provides a more complete listing of potential control technology.

TABLE 64. POTENTIAL CONTROL TECHNOLOGY FOR AIR EMISSIONS FROM COAL LIQUEFACTION PROCESSES (58)

Pollutant	Applicable control methods	Industry usage
Particulates	Mechanical methods	Extensive
	cyclones	Moderate
	multiclones	Moderate
	settling chambers	Moderate
	baffle chambers	Moderate
	impingement separators	Moderate
	Electrostatic precipitators	Common
	Fabric filters	Extensive
	Wet scrubbers	
	wet cyclones	Common
	venturi scrubbers	Common
	spray chambers	Common
	impingement scrubbers	Moderate
	packed bed scrubbers	Moderate
	fluidized bed scrubbers	Moderate

(continued)

TABLE 64. (continued)

Pollutant	Applicable control methods	Industry usage
Hydrogen sulfide	Primary sulfur recovery plant	Common
	Secondary sulfur recovery plant	Common
Sulfur dioxide	Wet scrubbing (with limestone)	Common
	Limestone injection	Moderate
Nitrogen oxides	Combustion modifications	Common
Hydrocarbons	Flares	Common
	Adsorption	Moderate

Particulate Control

Three particle collectors are applicable to coal liquefaction. They are mechanical collectors, wet collectors, and precipitators. These collector types are compared in Table 65. A description of each particulate control technology type is given in the following Table.

TABLE 65. CHARACTERISTICS OF PARTICULATE CONTROL SYSTEMS (59)

Collector type	Efficiency %	Minimum particle size, microns	Installed cost, $/km^3/sec*
Mechanical collectors			
Cyclones	65-95	5	0.19 - 0.24
Filters (bag house)			
high temperature	99	1	0.71 - 1.42
low-medium temperature	99	1	0.35 - 0.71

(continued)

TABLE 65. (continued)

Collector type	Efficiency %	Minimum particle size, microns	Installed cost, $/km^3/sec*
Electrostatic precipitators			
Single-stage	50-99.9	Submicron	0.35 - 1.18
Two-stage	75-99.9	Submicron	0.59 - 1.65
Wet collectors			
Spray chambers	80+	10	0.12 - 0.24
Venturi scrubbers	80-95+	0.8	0.24 - 0.94**
			0.47 - 1.42***

* Standard cubic meters per second (measured at 15.6°C and 101.353 kPa)
** mild steel
*** stainless steel

Mechanical Collectors--

Cyclones--Cyclones remove particulates by centrifugal force generated by spiraling gas flow. A typical cyclone schematic is shown in Figure 48.

Mechanical simplicity and low energy requirements are the primary advantages of cyclones. The primary disadvantage lies in limited collection ability. Cyclones are usually impractical for collecting particles with diameters less than five microns. Collection efficiency increases with gas velocity, specific gravity of particles, and inlet load. Viscosity changes in gases reduce efficiency with increased temperature.

Filters--Fabric filters, or bag houses, have been used to control dust particles in the mining industry throughout the Twentieth century. Figure 49 shows a typical bag house. Bag houses are a highly efficient, moderately priced way to control particules.

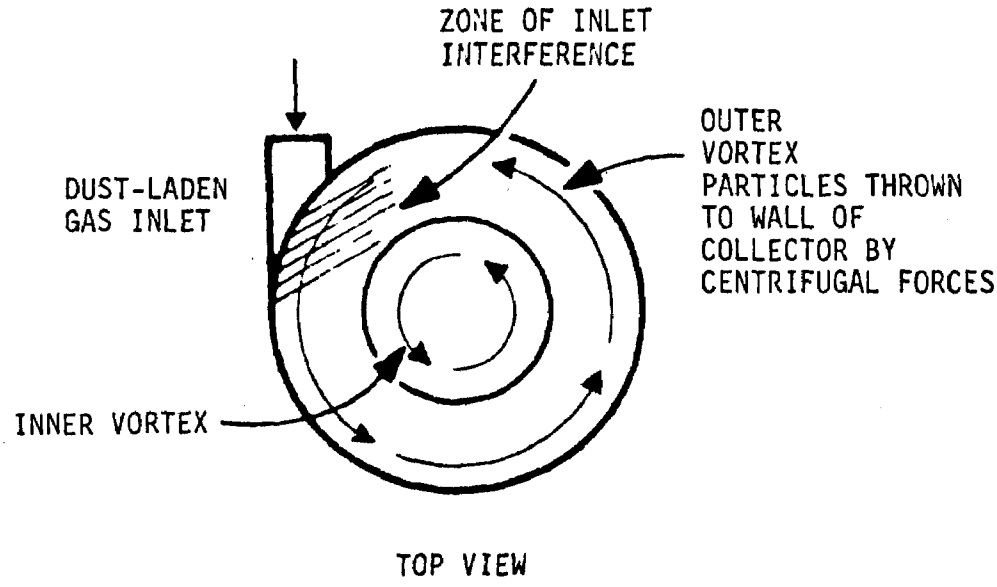

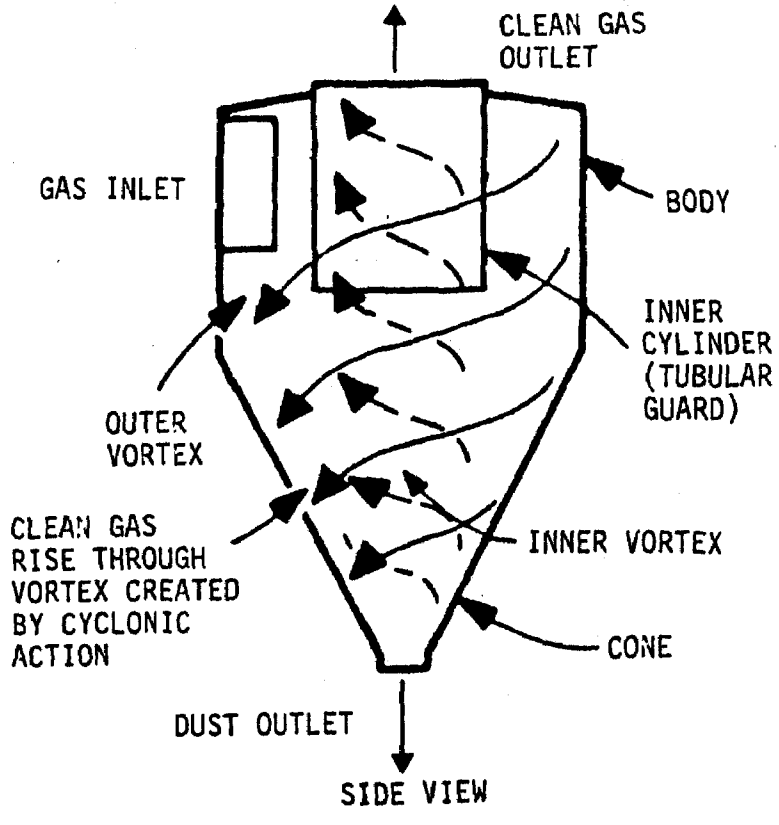

Figure 48. Two views of a typical cyclone (59)

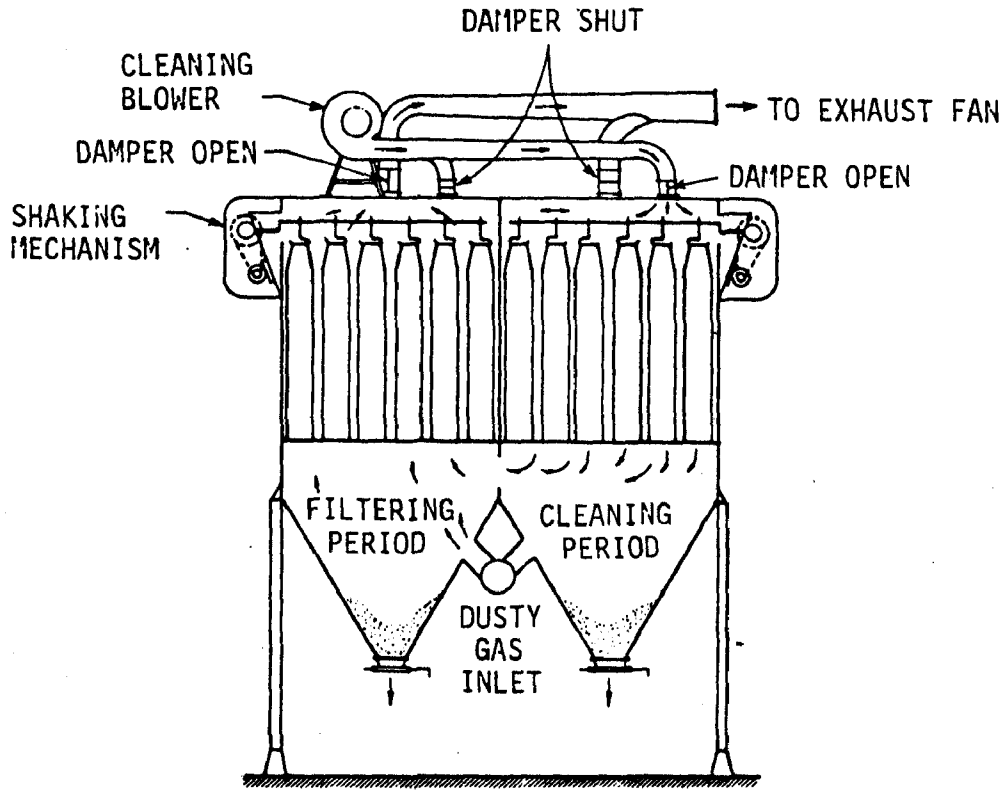

BAG FILTER

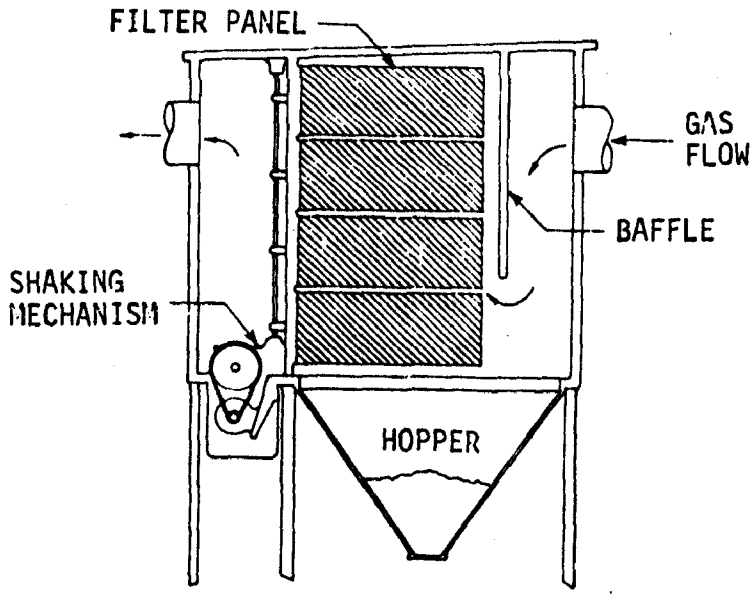

PANEL OR ENVELOPE FILTER

Figure 49. Commonly used filter types (59)

Filter use has spread to a variety of industries. Filters remove particulates by interception and inertial collection. Filters must periodically be cleaned of built up filter cake to maintain filter resistance. Filters are more effective than cyclones in controlling smaller sized particles but are unsafe for high temperature (greater than 260°C) applications (60).

Electrostatic Precipitator--

Electrostatic precipitators remove suspended particulates from gases by utilizing electrical effects. The particulate-laden gas is passed between oppositely charged electrodes. The particulates are ionized while passing through the electrical field. A collecting electrode, of opposite charge, attracts and collects the ionized particles. Periodically, the collected particles are neutralized and removed from the system. Figure 50 shows a typical electrostatic precipitator.

Electrostatic precipitators are high-efficiency collectors. Furthermore, submicron-sized particles can be collected. Although operating costs are relatively low, one disadvantage of the electrostatic precipitator is a high initial capital investment. Its large space requirement is another disadvantage.

Wet Collectors--

These devices utilize liquids, usually water or oil, to collect entrained particulates. Particulate removal by wet collectors employs one or more of the mechanisms of interception, impingement, gravity, diffusion, electrostatic forces, and temperature gradients. These collectors can be generally characterized as high efficiency, high energy means of particulate removal. Wet scrubbers and spray chambers are the most common wet collector types.

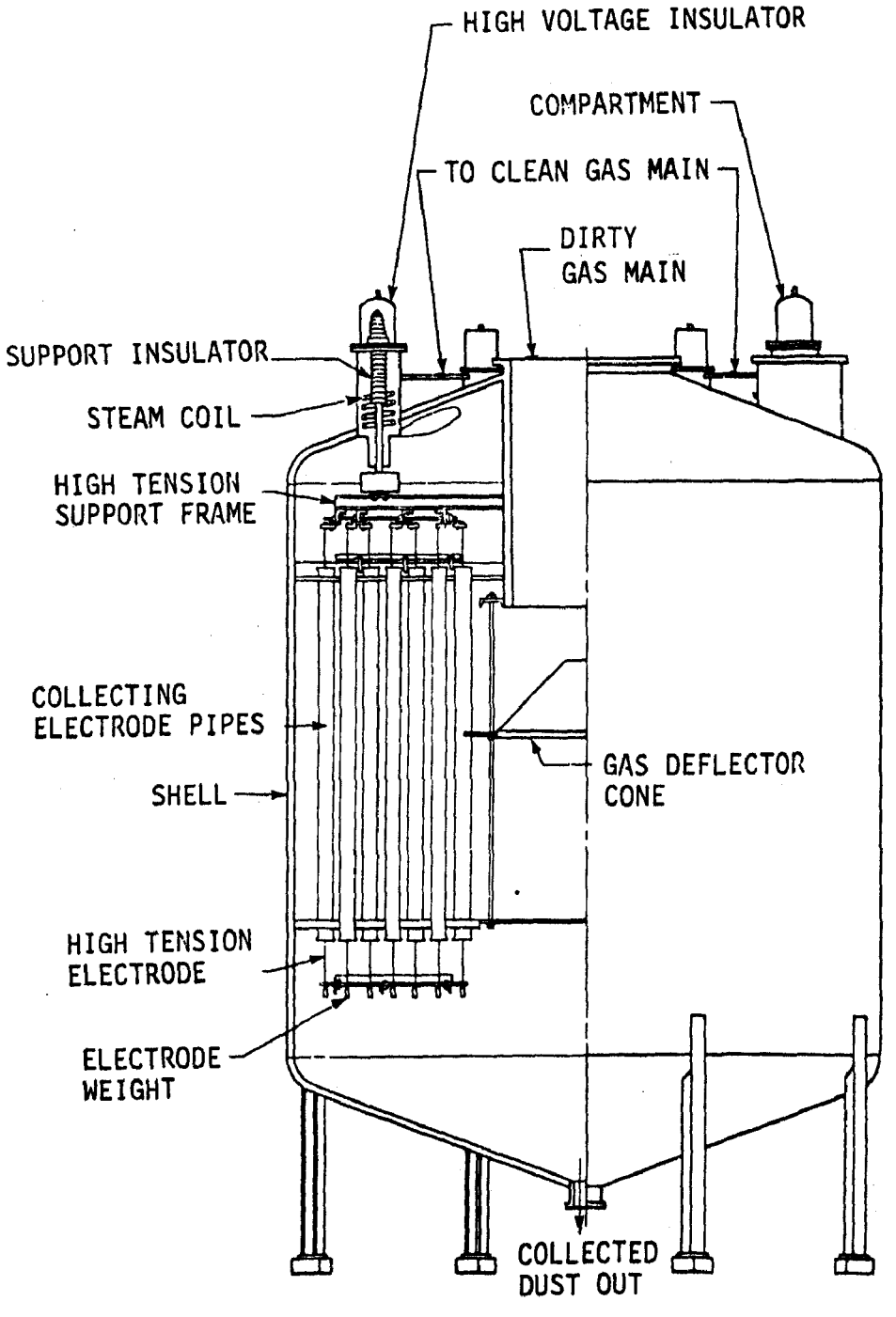

Figure 50. Electrostatic precipitator (59)

Wet scrubbers--The term, wet scrubber, defines a large segment of wet collectors. Among the various wet scrubbers are venturi, surface area, and impingement, shown respectively in Figures 51, 52 and 53. The venturi scrubbers are among the most common. In the venturi section, particle-laden gas is wetted. At the venturi throat, gas flow velocity is greatly increased, which produces a shearing force which atomizes the wet liquor. Impacted liquid droplets and particulates, and subsequent agglomeration of the droplets due to gas deceleration, remove entrained solids. The agglomerated particulate liquor droplets are collected in the bottom of the scrubber. The gas then passes through a packed bed section where final particulate removal is accomplished by countercurrent liquor flow. Collection efficiency increases when either the energy input or liquor-to-gas ratio is increased. Proper design allows collection of submicron-sized particles.

Spray chambers--Spray chambers are generally designed for collecting particles greater than five microns. Proper design minimizes pressure drops. As a result, high collection efficiency is possible at low operating costs.

Nozzles within the spray chamber atomize water droplets which collect particulates the same way a venturi scrubber does. Agglomerated droplets settle, then exit the bottom of the chamber while the clean gas rises and exits from the top of the chamber. Three typical spray chambers are shown in Figure 54.

Acid Gas Removal

All liquefaction processes will generate acid gases in the gas separation module. These acid gases are associated with hydrogen which does not react to form hydrocarbons, and

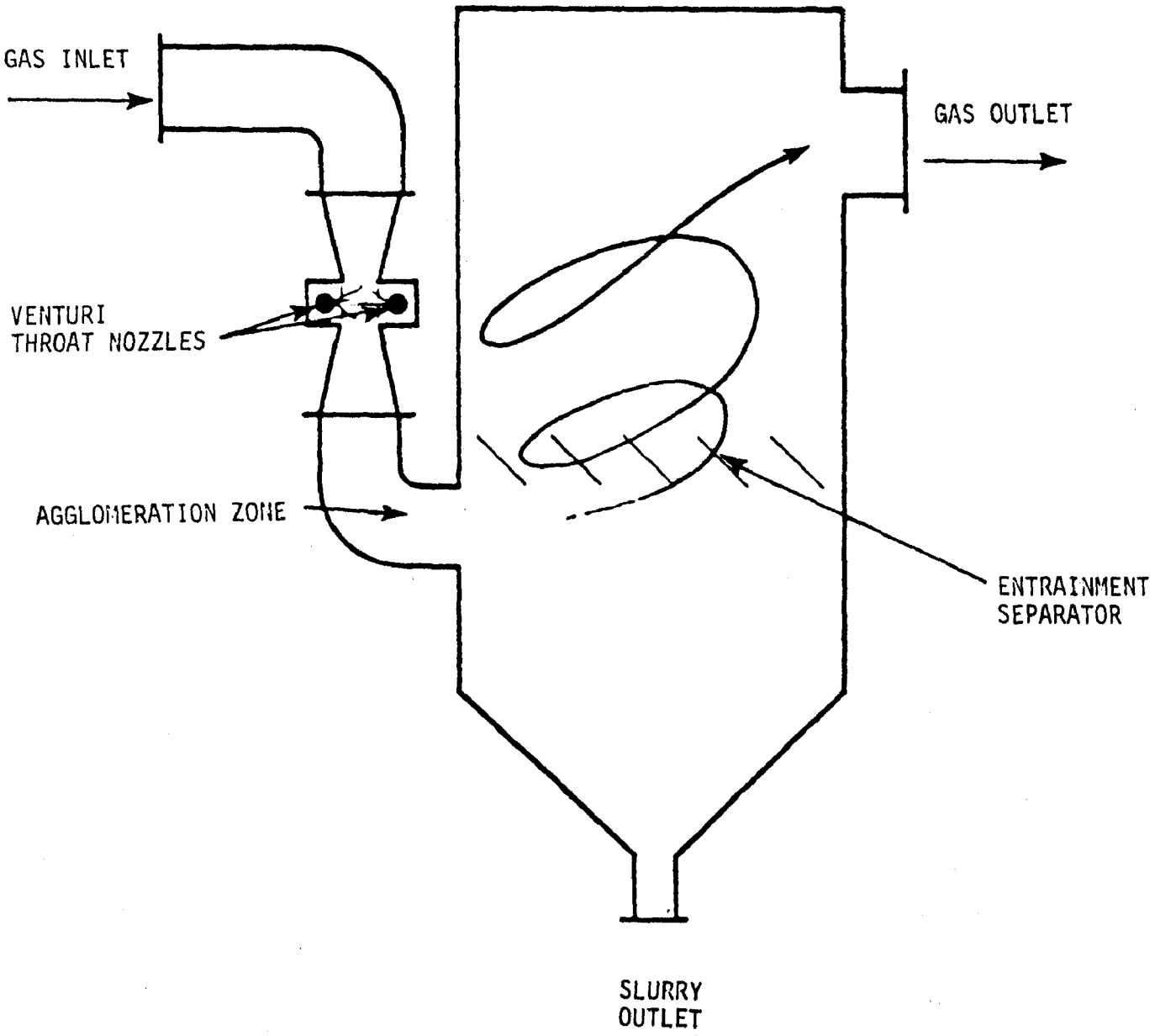

Figure 51. Venturi scrubber schematic (59)

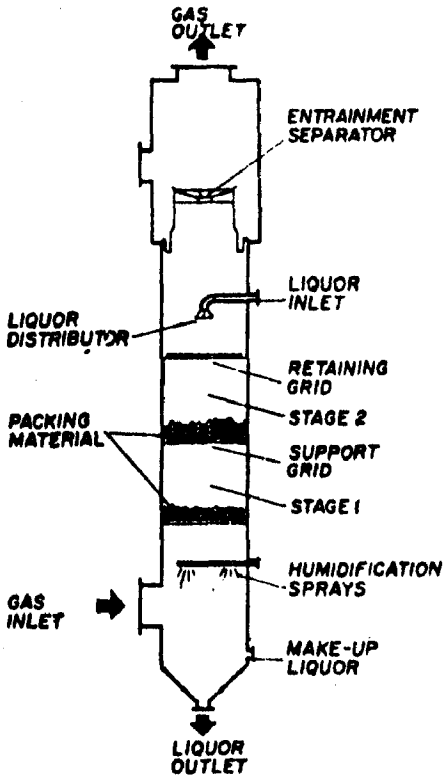

Figure 52. Surface area of a packed bed scrubber (61)

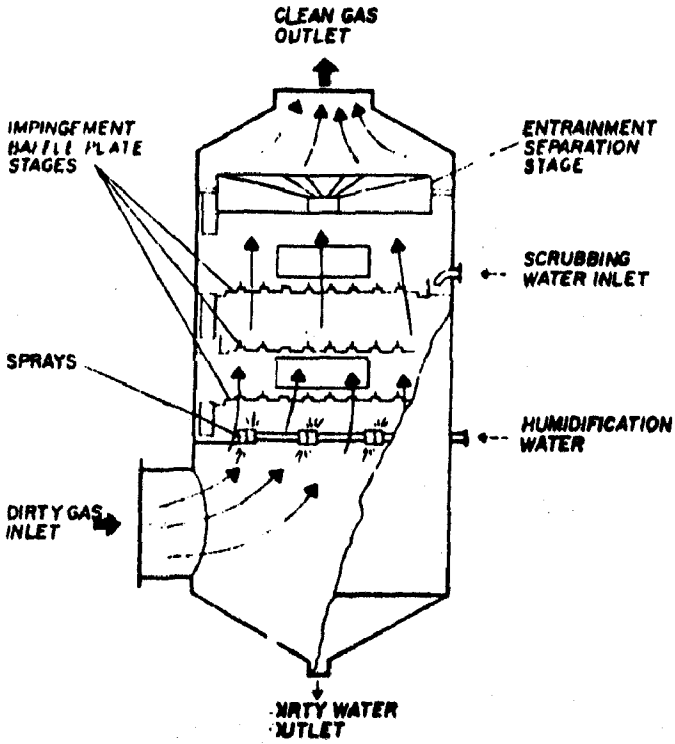

Figure 53. Typical impingement scrubber design (61)

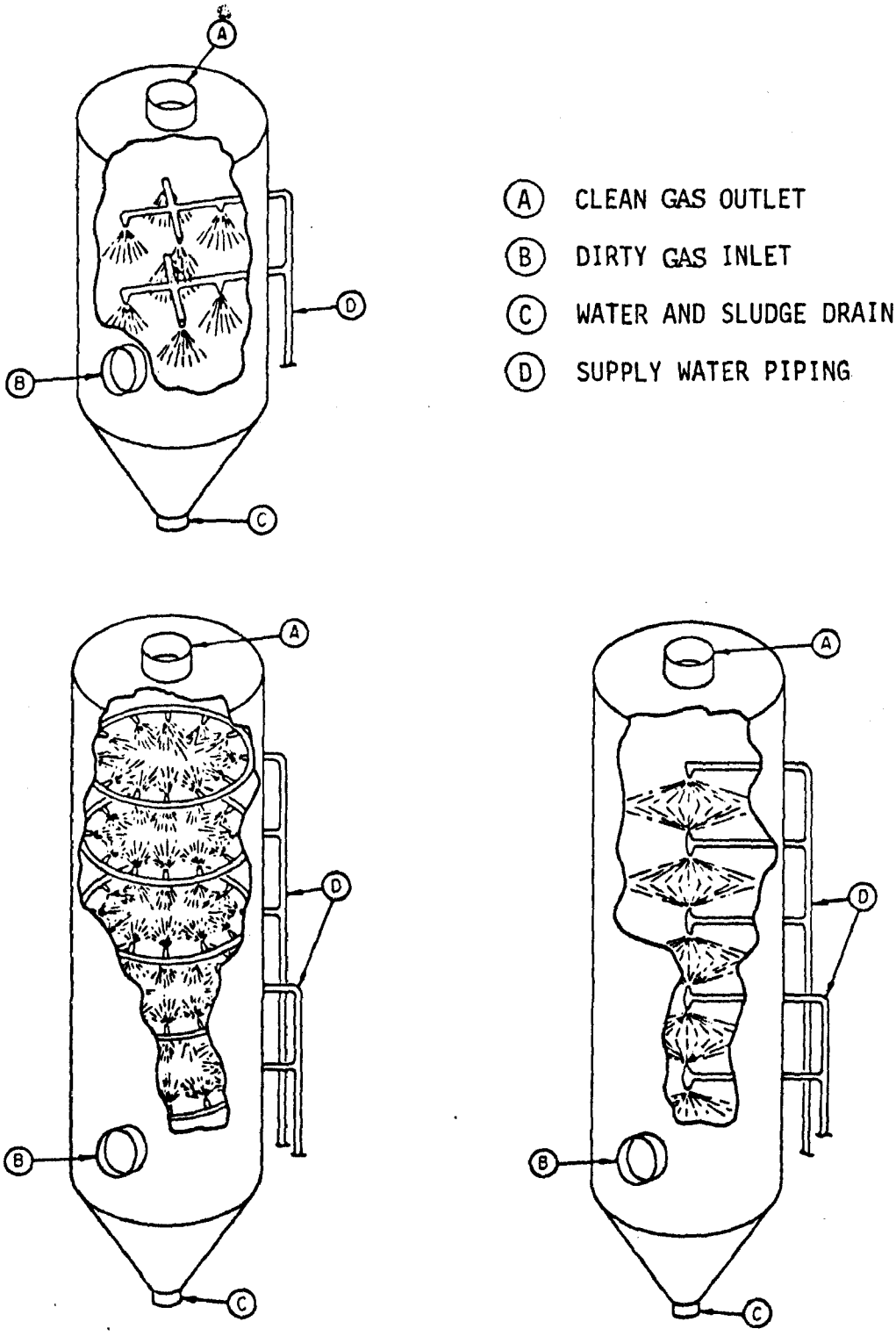

Figure 54. Typical spray chambers (59)

carbon monoxide which is produced in the hydrogenation reactors. The recovery of hydrogen is essential since the economics of the liquefaction process are partly governed by hydrogen requirements and its costs. The Multimedia Environmental Assessment (MEA) acid gas removal process has been applied in each of the three coal liquefaction processes of this report. However, a number of other candidate acid gas removal processes exist which should be given consideration before finalizing any design for a commercial coal liquefaction facility. Among those processes are the following (developers in parentheses):

- ADIP (Shell Development Company)
- Benfield (The Benfield Corporation)
- Purisol (American Lurgi Corporation)
- Rectisol (American Lurgi Corporation)
- Selexol (Allied Chemical Corporation)
- Sulfinol (Shell Development Company)

Overviews of the Benfield and Selexol processes are presented for comparison with MEA process operations.

Benfield Process--

The Benfield process uses hot potassium carbonate as a sorbent in removing acid gas constituents. A number of Benfield units are used commercially for sweetening natural gas and substitute natural gas. The Benfield process has also been used in a medium-Btu coal gasification plant in Westfield, Scotland, thereby demonstrating its applicability to coal conversion processes, including acid gas cleanup, in coal liquefaction.

Figure 55 is a flowsheet of the Benfield process. Raw gas is fed to an absorber column and contacted with a potassium

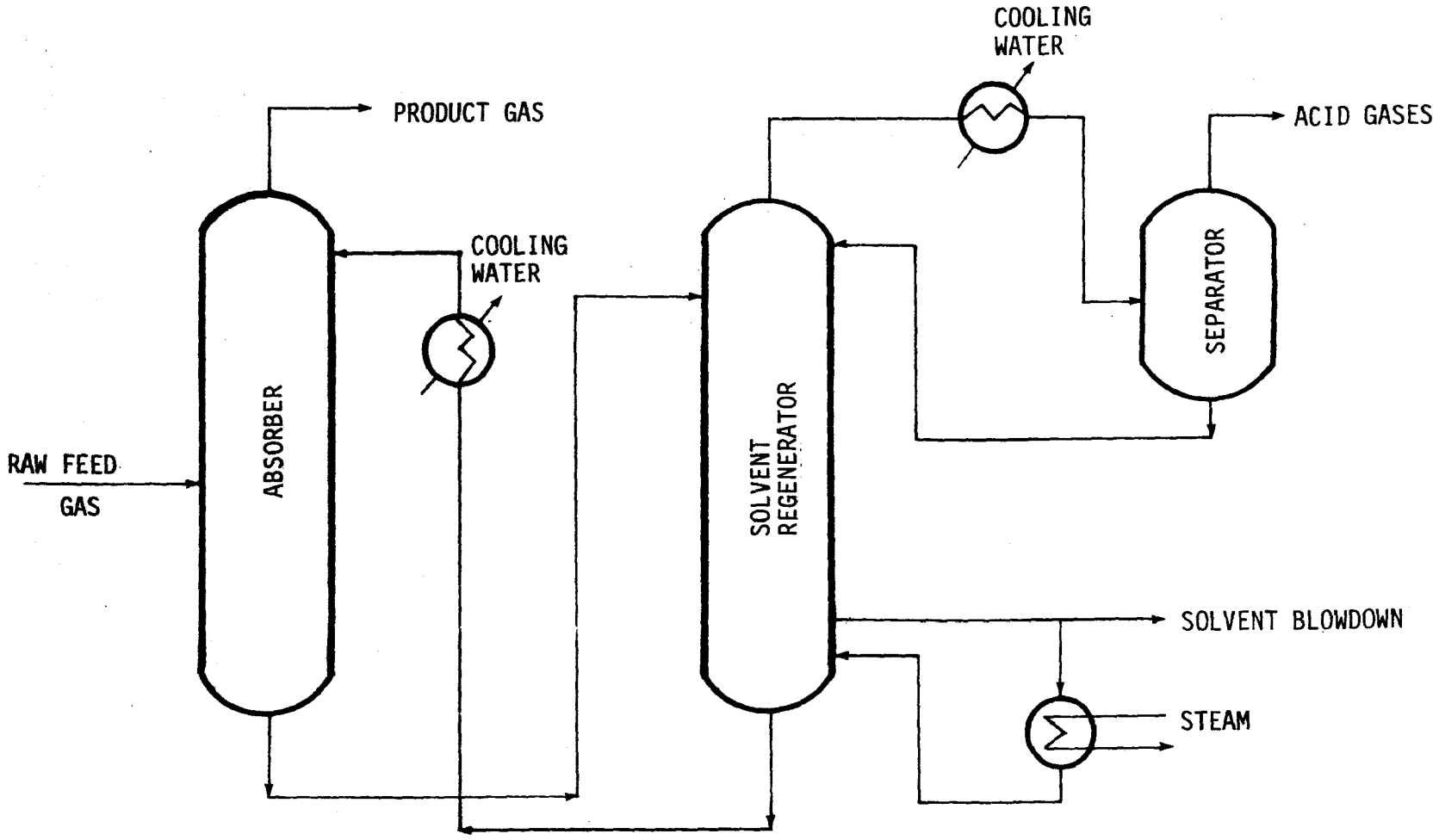

Figure 55. Benfield acid gas removal process (62)

carbonate solvent containing proprietary Benfield additives. The absorber typically operates at around 120°C and 4 MPa, although operating pressures approaching 14 MPa are acceptable. Purified gas exits the top of the absorber. The rich potassium carbonate solvent solution, with absorbed carbon dioxide, hydrogen sulfide, and organic sulfur species, is lowered to approximately atmospheric pressure and fed to an air absorber tower where absorbed gases are released. The lean solvent is then recycled to the absorber. The acid gas is sent to sulfur recovery.

The maximum control efficiency claimed for the process is that product gases of 2 ppm hydrogen sulfide by volume can be achieved. In addition the hot potassium carbonate solvent is effective in removing hydrogen cyanide. It may be present in appreciable quantities in coal liquefaction processes.

Selexol Process--

The Selexol process has been used in commercial gas purification operations. The process is considered applicable to coal conversion operations, although such applicability has not yet been demonstrated.

A flow diagram of the process is shown in Figure 56. Polyethylene glycol dimethyl ether is the Selexol solvent. Raw gas contacts the Selexol solvent in an absorber which operates at about 4°C and 6.8 MPa. The solvent removes hydrogen sulfide, carbon dioxide, and, if present, organic sulfur compounds such as carbon disulfide, carbonyl sulfide, and mercaptans. Product gas exits the top of the absorber. A combined stripper/separator regenerates the solvent and added gas, after passing through the separator, is ready for sulfur recovery. The final separator treatment minimizes solvent losses.

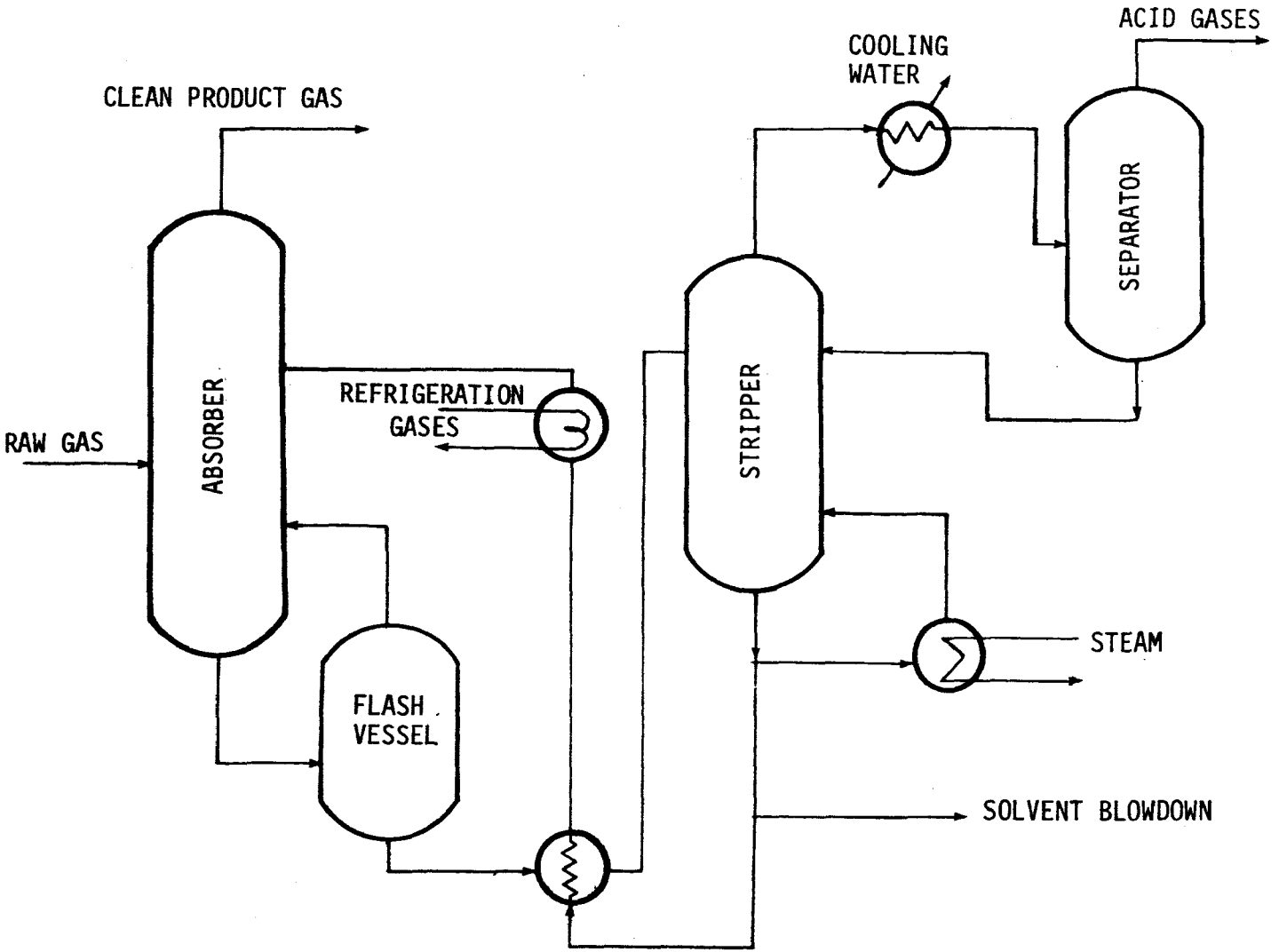

Figure 56. Selexol acid gas removal process (62)

The Selexol process can reduce the level of H_2S in the product gas to around 5 ppm by volume. It is not designed to treat gas with low acid gas concentrations. Typical feed contains 60 ppm H_2S. Although the Selexol solvent is expensive, its low vapor pressure minimizes solvent losses (62).

Sulfur Recovery and Tail Gas Cleanup--

The treatment of acid gases to separate hydrogen-rich gas from them can be done by one of the many processes that are currently employed in the petrochemical industry. The acid gas removal processes also furnish proper feed to the sulfur recovery process. Sulfur can be recovered from hydrogen sulfide either in the elemental form or as sulfuric acid. If the Claus sulfur recovery process is used, its tail gas will also need treatment to limit the emission of sulfur compounds. Table 66 describes the operating characteristics of sulfur recovery and tail gas cleanup processes most likely to be integrated in coal liquefaction facilities. The Claus and Stretford processes are described in this section. They are the two major sulfur recovery processes currently in use. The tail gas cleanup processes which are discussed are the Beavon and the Shell Claus Off-Gas (SCOT) treating processes.

TABLE 66. OPERATING CHARACTERISTICS OF SULFUR RECOVERY AND TAIL GAS CLEANUP PROCESSES (59)

	Sulfur recovery		Tail gas cleanup	
	Claus	Stretford	Beavon	SCOT
Sulfur removal efficiencies				
H_2S	90-95%	99.9%	99.9%	99.8%
COS/CS_2	90%	NR*	98%	98%
R-SH	95%	NR*	NR*	NR*
Hydrocarbons	90%	NR*	NR*	NR*

(continued)

TABLE 66. (continued)

	Sulfur recovery		Tail gas cleanup	
	Claus	Stretford	Beavon	SCOT
Secondary pollutants				
Gases	Yes	No	Yes	No
Liquids	No	No	Yes	Yes
Solids	Yes	No	No	No
Recovery as elemental sulfur	Yes	Yes	Yes	No
Required energy/material inputs				
Electricity	No	Yes	Yes	Yes
Steam	No	Yes	Yes	Yes
Cooling water	No	Yes	Yes	No
Chemical additives	Yes	Yes	Yes	No
Fuel gas	No	No	Yes	Yes

*NR denotes efficiency not reported

Claus process--In the early 1880's, English chemist C.F. Claus discovered that elemental sulfur could be recovered from hydrogen sulfide gas when it was mixed with air and oxidized over iron or bauxite catalysts at elevated temperatures. Around 1937, I.G. Farben devised two modifications of the original direct oxidation scheme. The first, split flow, involved precombustion of one-third of the hydrogen sulfide gas to sulfur dioxide, followed by reaction over bauxite catalysts with the rest of the hydrogen sulfide stream. The second variation was called straight through. It consisted of noncatalytic partial oxidation of 60 percent of the hydrogen sulfide to elemental sulfur, followed by conversion of hydrogen sulfide in the remaining flue gas in

a catalytic reactor. Both Farben improvements reduced exothermic heat evolution in the catalytic reaction stage, the major drawback to the direct oxidation mode.

Among the more recent process modifications are sulfur recycling and sulfur condensation. Sulfur recycling is used when feed streams contain insufficient hydrogen sulfide to maintain reaction temperature. Product sulfur is burned to generate sulfur dioxide gas and makeup heat. Sulfur condensation is used to increase efficiency. Elemental sulfur is condensed and removed between Claus stages to maintain reaction equilibrium conditions favoring increased sulfur formation in subsequent stages. The process modification selected depends on the particular application of the process, specifically the hydrogen sulfide content of the gas to be treated. Figure 57 illustrates a typical present-day Claus configuration.

The Claus process, proven and commercialized, has several advantages. It recovers sulfur in elemental form, which may provide income from sale of the recovered by-product. The process also effectively reduces concentrations of organic sulfur gases as well as hydrogen sulfide. Tail gas from the Claus plant contains one to three percent of a mixture of H_2S, SO_2, COS, CS_2, and elemental S vapor and liquid. The primary disadvantage of the Claus process is its ineffective treatment of low hydrogen sulfide feed gases. Feed gases containing below 10 to 15 mole percent hydrogen sulfide cannot supply the reaction heat required to maintain process temperature (58).

Stretford process--The Stretford process, developed by Peabody Engineering (62), has been used commercially to purify coke oven gas and to remove hydrogen sulfide from

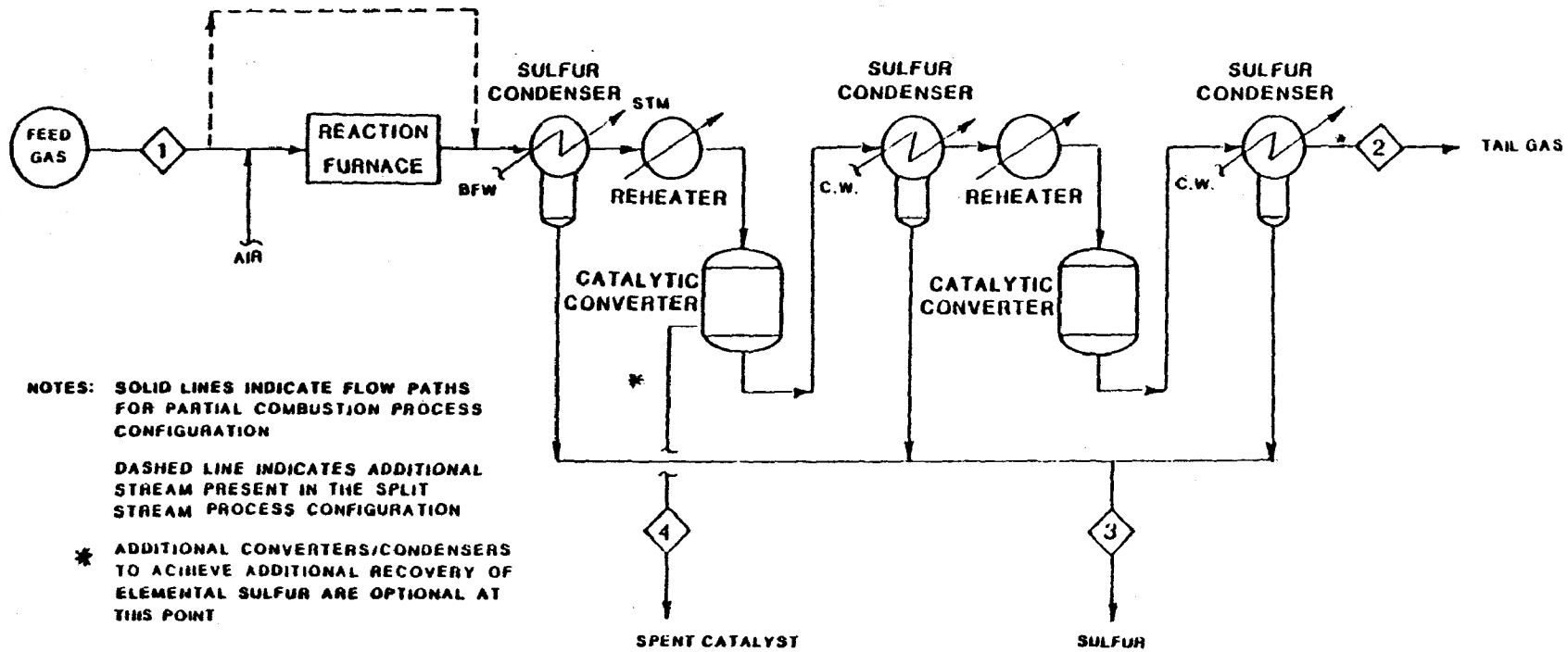

Figure 57. Claus sulfur recovery process (62)

natural gas. In this process, hydrogen sulfide reacts with sodium carbonate solution to form sodium bicarbonate and sodium hydrosulfide. Catalytic sodium vanadate solution reacts with the NaHS to form elemental sulfur. Air blowing with sodium anthraquinone disulfonate (ADA) regenerates the sodium vanadate catalyst. The ADA is regenerated by oxidation. The reaction sequence is:

1) $H_2S + Na_2CO_3 \longrightarrow NaHS + NaHCO_3$

2) $4NaVO_3 + 2NaHS + 2H_2O \longrightarrow Na_2V_4O_9 + 2S + 4NaOH$

3) $Na_2V_4O_9 + 2NaOH + H_2O + ADA \longrightarrow 4NaVO_3 + 2ADA$ (reduced state)

4) $2ADA$ (reduced state) $+ O_2 \longrightarrow 2ADA + H_2O$

Reaction 1) occurs in the absorber, 2) and 3) in the hold tanks, and 4) in the oxidation tank. Figure 58 shows a typical Stretford process configuration.

The Stretford Process can reduce the hydrogen sulfide content of the exiting tail gas to less than 1 ppm by volume. Chemical requirements are low. The Stretford process is limited to feed gases of 15 percent hydrogen sulfide or less. Overloading or low pH feeds can result in nonregenerable thiosulfate formation. Additionally, Stretford is ineffective in removing organic sulfur compounds.

Beavon process--This process, named for D.K. Beavon, was developed by the Ralph M. Parsons Company. Final exit gas concentrations in the range of 40 to 80 ppm sulfur (as SO_2) have been reported for the process.

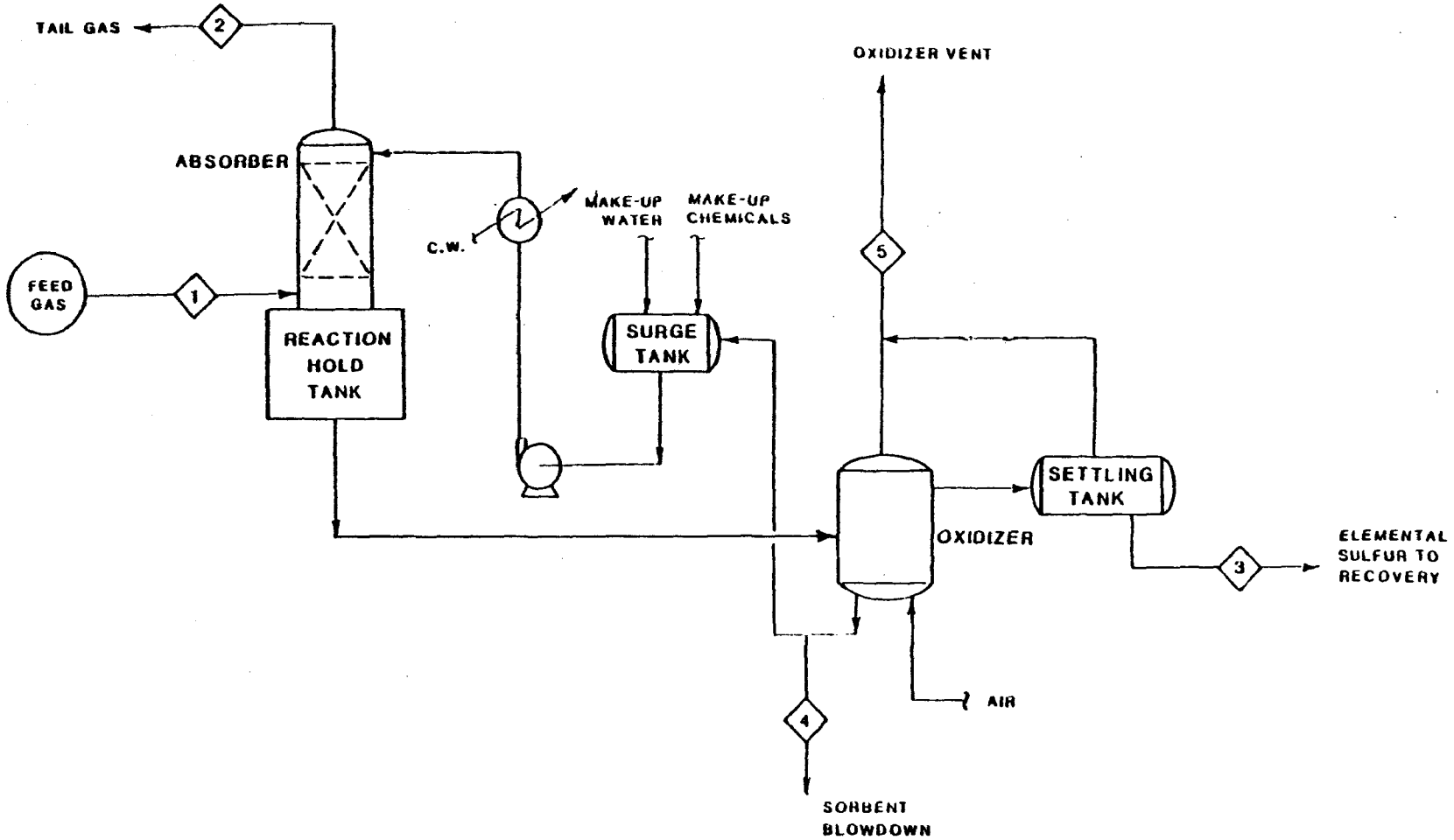

Figure 58. Stretford sulfur recovery process (62)

In the Beavon Process, entering tail gas is mixed with hot flue gas. The gas is passed through a catalytic reactor containing a cobalt-molybdate catalyst. Sulfur compounds are hydrogenated to form hydrogen sulfide. The gas is then cooled. Water vapor condenses, leaving a cool, dry gas. The gas is then passed to a Stretford section where hydrogen sulfide is converted to elemental sulfur. The process flow sheet is shown in Figure 59.

The Beavon Process effectively recovers sulfur from carbonyl sulfide and carbon disulfide as well as from hydrogen sulfide. It also recovers sulfur in its elemental form. The process condensate may require further treatment prior to discharge.

SCOT Process--The SCOT Process, developed by the Shell Development Company, catalytically converts organic sulfur to hydrogen sulfide and removes it with a special scrubbing system.

Figure 60 shows a simplified SCOT process flow chart. The catalytic reactor converts organic sulfur to hydrogen sulfide according to the following reactions:

$$COS + H_2O \longrightarrow H_2S + CO_2$$

$$CS_2 + 2H_2O \longrightarrow 2H_2S + CO_2$$

Sulfur dixoide and free sulfur react as follows:

$$SO_2 + 3H_2 \longrightarrow H_2S + 2H_2O$$

$$S + H_2 \longrightarrow H_2S$$

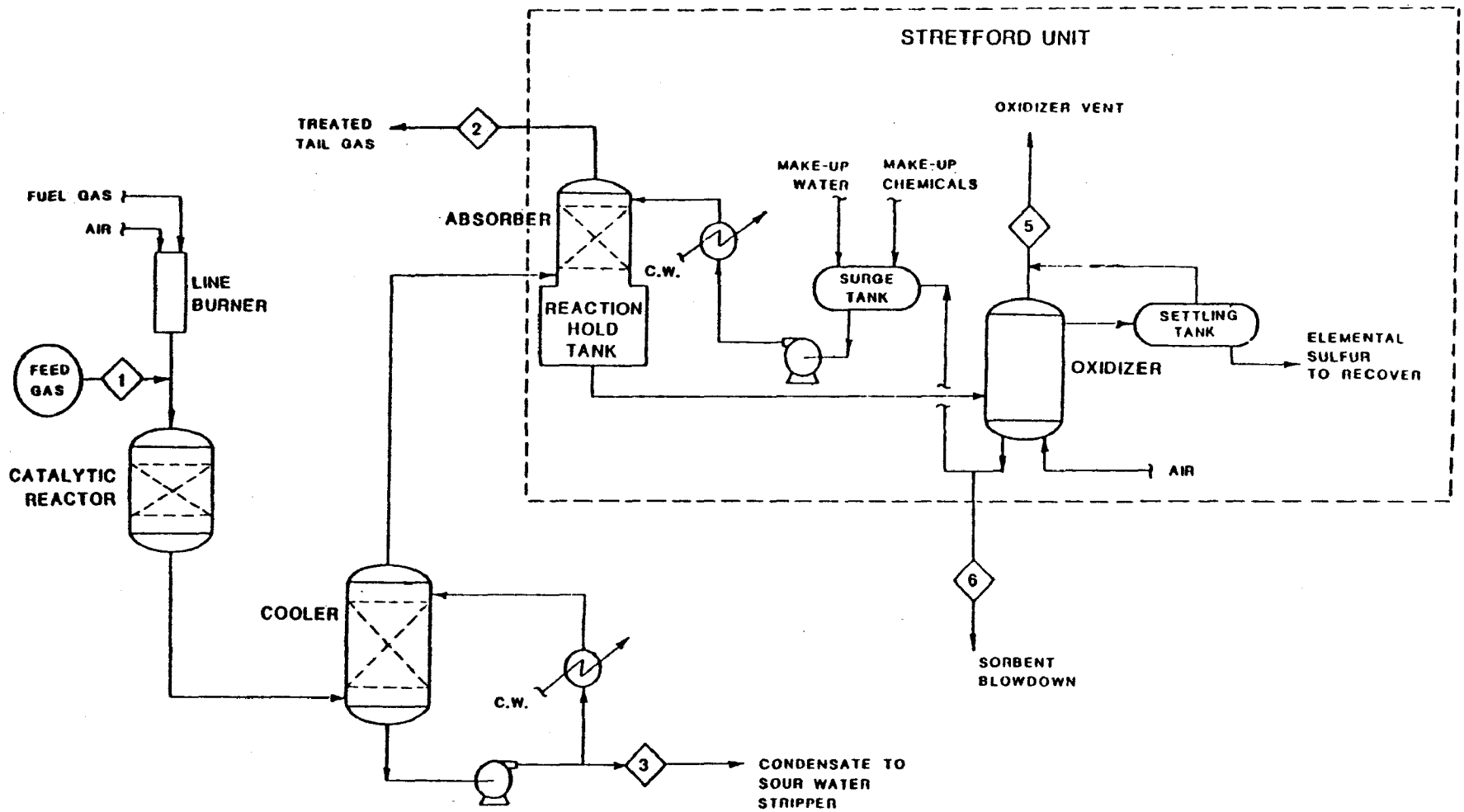

Figure 59. Beavon tail gas cleanup process (62)

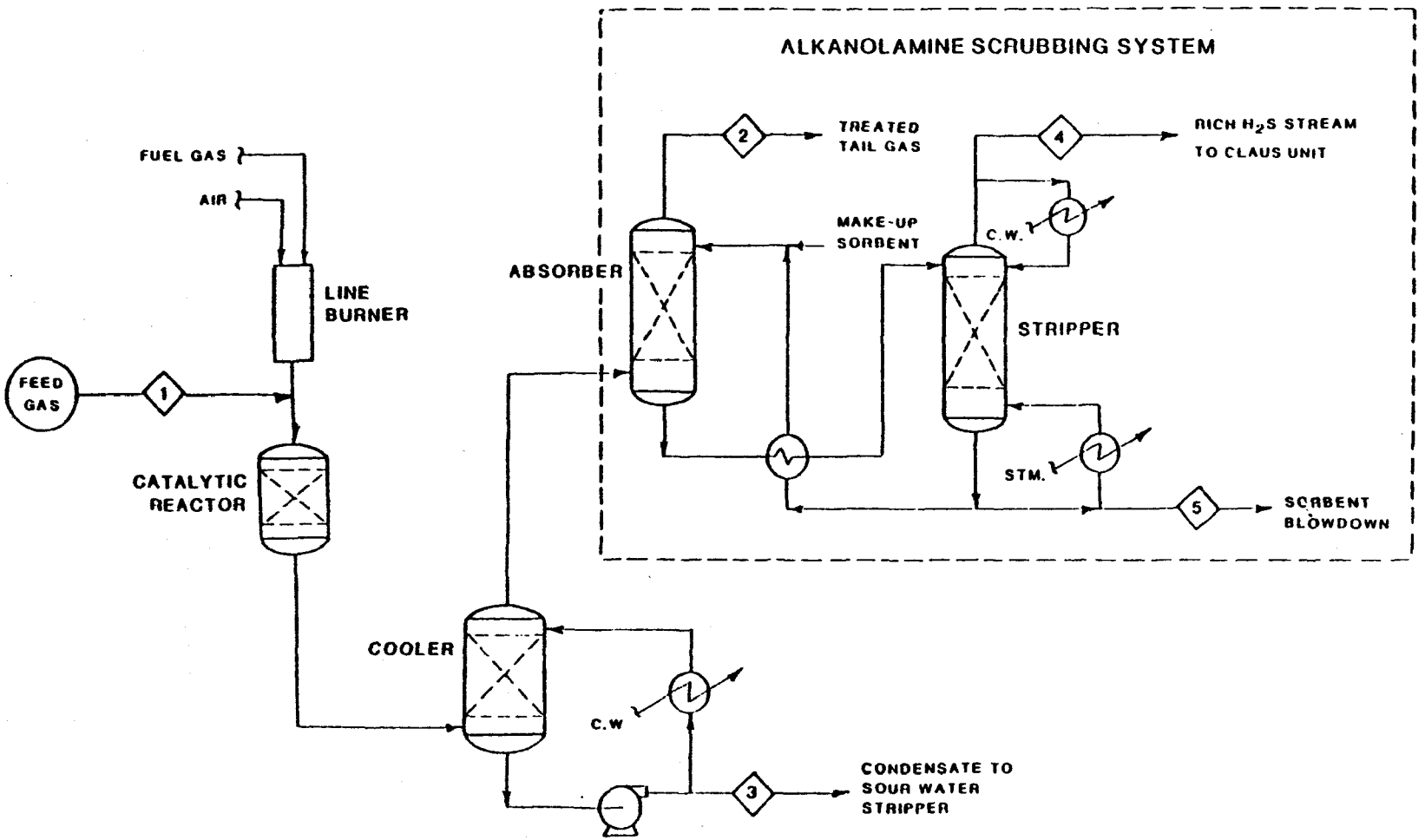

Figure 60. SCOT Process (62)

Alkanolamine scrubbing removes the hydrogen sulfide from the tail gas stream. The hydrogen sulfide can be recovered in a stripper and recycled to the sulfur recovery process. Reports indicate that treated tail gases have a total sulfur content of 200 to 500 ppm by volume. The SCOT process requires additional fuel gas to provide reducing gas and heat for the reactor section. The equipment utilized is proven and removal efficiencies higher than reported are theoretically possible.

NO_x Control--

Control of oxides of nitrogen, nitrous oxide (N_2O), nitric oxide (NO), and nitrogen dioxide (NO_2) is a problem without a well-defined solution. Thermal NO_x, the combustion product of molecular nitrogen, is formed in every combustion system using air. Additionally, combustion of fuel-bound nitrogen compounds converts them to NO_x.

Several approaches have been considered to control thermal NO_x formation. All are combustion modifications, contrived to reduce NO_x formation by temperature or equilibrium control. Reduction in combustion zone temperature, combustion zone residence time, or excess air, as well as premixing of air with fuel, water injection, flue gas recirculation, staged combustion, and modified combustor geometry are all being studied to determine their potential to reduce NO_x emissions. Reduced turbine efficiency is generally associated with such modifications.

Controlling fixed NO_x from fuel-bound nitrogen is of greater interest when considering combined gas and steam (COGAS) cycle power generation. In COGAS systems utilizing

low temperature cleanup processes, water scrubbing can remove most of the fuel-bound nitrogen. Currently no high temperature cleanup process is capable of removing combined nitrogen constituents from fuel gas. Research efforts have investigated, without success, the possibility of using Fe_2O_3 catalyst to decompose ammonia, the primary source of fuel-bound NO_x, into molecular nitrogen and hydrogen. Such a composition increases the overall N_2 content.

WASTEWATER TREATMENT AND CONTROL TECHNOLOGY

Water requirements for coal conversion plants are high. Wastewater streams are generated from gas separation, solids separation, and fractionation modules, and from the acid gas removal process. Raw gas from the gasifier in the hydrogen generation module is scrubbed with water, and this results in a wastewater stream. Some of the pollutants in the wastewaters include hydrogen sulfide, carbon dioxide, hydrocarbons, phenols, ammonia, cyanides, and acidic or basic substances. All wastewater streams may not need the same treatment since the complete overall wastewater treatment depends on characteristics of each individual wastewater stream. The principal difference among the various liquefaction processes, as far as the wastewater treatment is concerned, is the chemical characteristics of the process condensates generated in the phase separation module. The concentration of pollutants in the wastewaters will vary for all processes. Treatment of wastewater effluents can be accomplished by a great number of processes. However, in order to select and implement an efficient waste management program, it is necessary to evaluate the control and treatment techniques against specific factors applicable to each case. Table 67 is a list of control techniques for potential pollutants from coal conversion plants. The table contains, for various

TABLE 67. POTENTIAL CONTROL TECHNOLOGY FOR COAL CONVERSION WASTEWATER (63)

Pollutant	Treatment method	Limitations	Applicable concentration range, ppm	Level after removal, ppm	Industry usage
Hexavalent chromium	Reduction to chromium^{+3} (III) with SO_2, $NaHSO_3$ or $FeSO_4$ at pH below 3 followed by precipitation at pH 8.5-9.5	Reduction is not complete. Rate depends on pH, reducing agent and contact time.	100-500	0.05-1	Common
	Adsorption on anion exchanger	Recovery process	200	0.05	Moderate
	Evaporative recovery	Recovery process	500		Not practiced
Cyanide	Oxidation to cyanate with chlorine at pH above 10		100-1000		Not practiced
	Oxidation to cyanate with chlorine at pH above 10 followed by acid hydrolysis to CO_2 and N_2 at pH 2-3	Increases total dissolved solids and treatment costs		0.1	Moderate
	Decomposition to CO_2 and N_2 via cyanate with chlorine at pH 8-8.5	Toxic cyanogen chloride may be liberated, a large excess of chlorine is required.	100-1000	Complete removal	Common
	Electrolytic decomposition to CO_2 and N_2 via cyanate at 200°F	Interference by sulfate	1000	0.1-0.4 after 7-18 days	Common
	Ozonation	Only partial decompostion to CO_2 and N_2	100-1000	Complete removal	Moderate
	Storage of waste at ambient temperature	Incomplete treatment	100-1000	70-90% after 4-8 days	Coking industry
	Precipitation as ferro ferricyanide with iron salt	Incomplete treatment	100-1000	0.5-12.3	Not practiced
	Adsorption on activated carbon	Incomplete treatment	100-1000	0.6-1.4	Not practiced
	Biological treatment		100	70-90% removal	
	Oxidation with hydrogen peroxide to cyanate (Kastone process)	Proprietary information	100-1000		

(continued)

TABLE 67. (continued)

Pollutant	Treatment method	Limitations	Applicable concentration range, ppm	Level after removal, ppm	Industry usage
Fluoride	Precipitation with lime as calcium fluoride at pH 11	Slow rate of precipitation	720	10-20	Common
	Coagulation by alum	Applicable only to low hardness water	20	1	Not practiced
	Adsorption on hydroxylapatite bed	Presence of chlorine increases cost of bed regeneration	20	0.5-1.5	Water treatment
	Adsorption on aluminum saturated cation exchanger	Expensive	20		Not practiced
	Adsorption on activated alumina bed	4% of bed is lost in each regeneration cycle	20	1	Not practiced water treatment technology
Iron (11)	Oxidation to Fe^{+3} by aeration followed by precipitation as $FE(OH)_3$ at pH 7			Below 0.5	Common
	Oxidation to Fe^{+3} by chlorine followed by precipitation as $Fe(OH)_3$ at pH 7			0.5	Moderate
	Deep well disposal				Steel industry
Tar and Oil	Gravity separation	Does not remove emulsion		60-99% of floated oil	Common
	Centrifugation				Common
	Heating				Not practiced
	Precoat Filtration			5-20	Common
	Coagulation or de-emulsification with chemicals, followed by air flotation or settling	Addition of alum forms sludge which is diff-cult to dewater		50-90%	Common

(continued)

TABLE 67. (continued)

Pollutant	Treatment method	Limitations	Applicable concentration range, ppm	Level after removal, ppm	Industry usage
	Biological treatment			15	Common
pH Control	Neutralization with chemicals	Cost depend on buffer capacity of waste		Neutral pH	Common
Phenols	Benzene-caustic dephenolization process		500	210-240	Common
	Counter-current extractor (Chemizon process)		500	100	Common
	Pulsed column extractors		500	30	Common
	Phenosolvan dephenolization (Lurgi)		500	4.5-10	Common
	IFAQOL dephenolization (Carl Still)		500	40	Common
	Light oil extraction (Koppers)		1500	10-30	Common
	Incineration		7000	Complete	Not practiced
	Oxidation ditch		50-500	99%	Common
	Trickling filter		50-500	98%	Common
	Activated sludge		50-500	99%	Common
	Oxidation with ozone	Expensive when waste contains more than 5 mg/l	50	0.35	Limited usage
	Activated carbon bed		50	0.005	Common
	Oxidation with chlorine		50		Common
Dissolved Solids	Concentration and evaporation		to 100,000	Complete removal	Common

(continued)

TABLE 67. (continued)

Pollutant	Treatment method	Limitations	Applicable concentration range, ppm	Level after removal, ppm	Industry usage
	Reverse osmosis		1,000-2,000	50-95%	Increasing
Suspended Solids	Sedimentation			90-95%	Extensive
	Chemical coagulation			95-99%	Moderate
	Filtration			95%	Extensive
Ammonia	Stripping at pH of 10-11	Water adsorbs CO_2-may lead to scale formation		50-90%	Extensive
	Biological nitrification	Nutrient may be required	1250	2	Extensive
	Ion exchange			80-95%	Not practiced
Chloride	Deep well injection		60	Ultimate disposal	Moderate
	Evaporation ponds	Limited by geographical location and land availability		Complete removal	Extensive
Sulfide	Biological oxidation to sulfate			Complete oxidation	
Thiocyanate	Biological oxidation	Excess ammonia lower efficiency		90%	Moderate
	Ion exchange	Excess ammonia lower efficiency		90%	Not practiced

treatments, a brief description, limitations, the applicable concentration range efficiency, and the extent of industrial usage. It should be emphasized, however, that many of the methods listed have been developed specifically for product recovery and, as such, are not applicable to control of pollutants present in the wastewater in low concentrations.

Oil-Water Separation

The wastewaters from gas separation and solids separation units will be combined and sent to a gravity separator. The lighter oil layer which floats on the top is removed and sent to storage. The heavier aqueous layer, which contains dissolved organics along with ammonia and hydrogen sulfide, is sent to phenol extraction. A schematic of a corrugated plate interceptor oil-water separator is shown in Figure 61. The control effectiveness, process advantages, and process disadvantages of the oil-water separator are given below:

Control Effectiveness

- Removes oils with 60-99% efficiency
- Removes solids with 10-50% efficiency

Process Advantages

- Simple and effective way to remove nonemulsified oils and solids from wastewater
- Low energy consumption
- High reliability

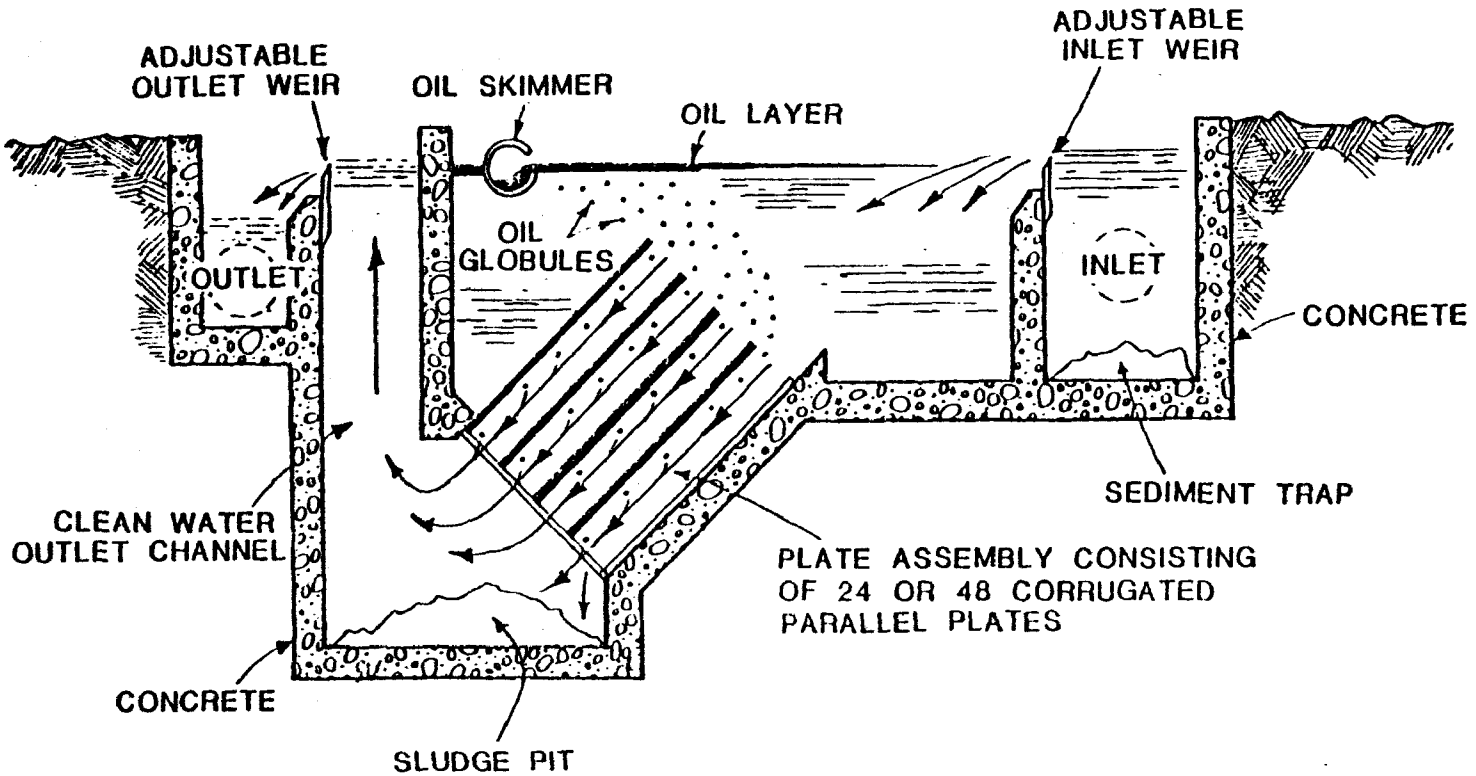

Figure 61. Schematic of corrugated plate interceptor oil-water separator (62)

Process Limitations

- Requires large amounts of space
- Effluent streams require further control
- Only effective for separation of nonemulsified oils

Other Alternatives

- Air flotation
- Gravity separation plus air flotation
- Filtration
- Centrifuging
- Filtration or centrifuging plus heating

Phenol Extraction

Removal of phenols from wastewater streams is generally done by liquid-liquid extraction. The most applicable process will probably be the Phenosolvan process which has been used for all Lurgi process plants. The flow scheme for the Phenosolvan process is shown in Figure 62. The liquid is mixed with an organic solvent (isopropyl ether) in an extractor in order to dissolve the phenol. The phenol solvent mixture is collected and fed to solvent distillation columns where crude phenol is recovered as the bottom product and the solvent as the overhead product. The solvent is then recycled to extractors after removing some of the

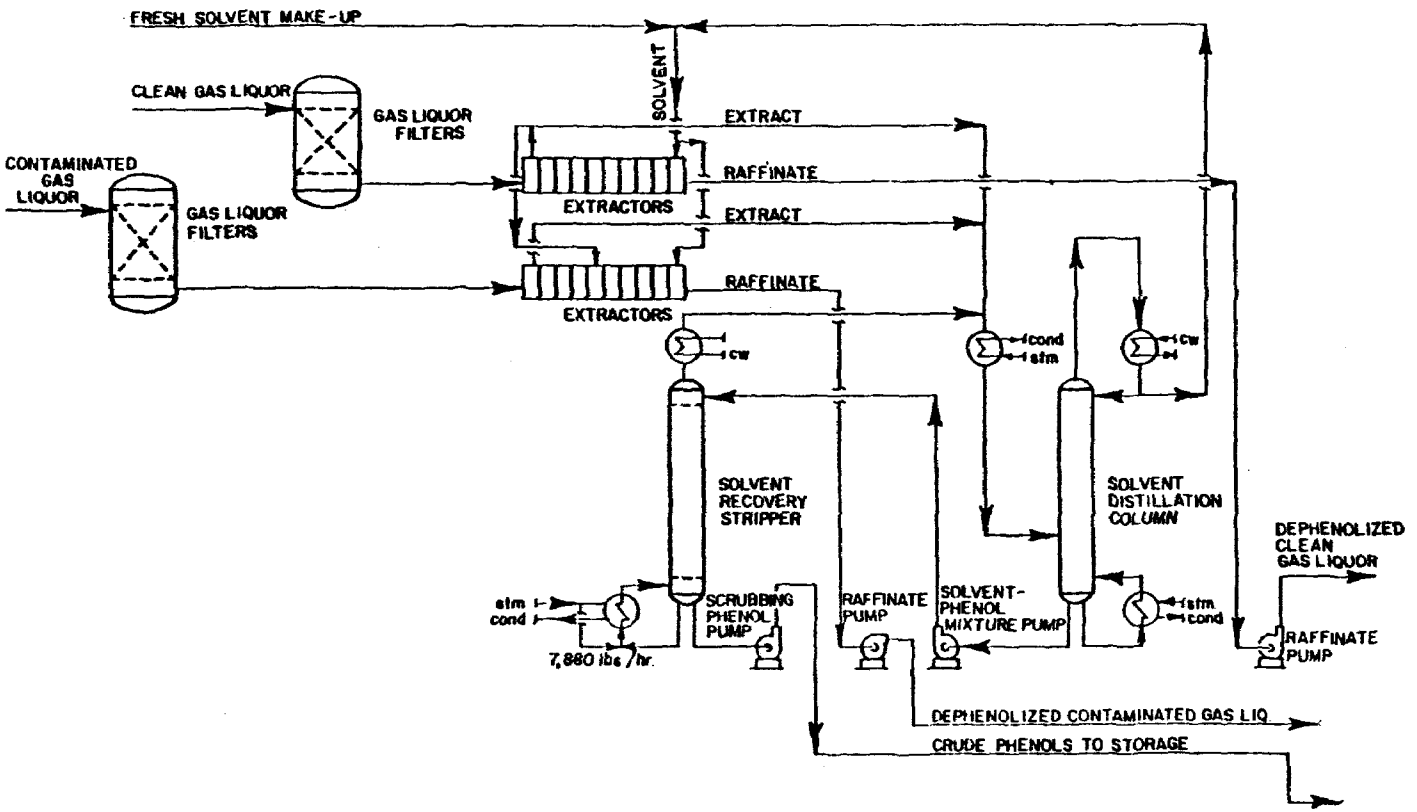

Figure 62. Flow scheme for phenol extraction - Phenosolvan Process (62)

the water. The raffinate is stripped with fuel gas to remove traces of solvent which were picked up in the extraction step. The fuel gas is scrubbed with crude phenol product to recover the solvent. Finally, the phenol solvent mixture is distilled in the solvent recovery stripper to produce the crude phenol product, and the solvent is recycled to the extraction step. The solvent-free raffinate is heated and steam stripped to remove carbon dioxide, hydrogen sulfide, and ammonia (62).

The control effectiveness, process advantages, and process limitations are as follows:

Control Effectiveness

- 99.5% removal of monohydric phenols
- 60.0% removal of polyhydric phenol
- 15.0% removal of other organics

Process Advantages

- General - economically attractive technique for phenol removal and recovery
- Specific - solvent has:
  - Relatively low volatility
  - Low solubility in water
  - High distribution coefficient

Process Limitations

- Solvent is soluble enough in water to require its recovery

- Initial process investment is substantial.

Alternative Processes

- Absorption, counter-current liquid extraction
  - Benzene or light process
  - Tricresyl phosphate process
  - Holley-Mott Process (horizontal flow)
  - Lowenstein Low Process
- Adsorption on solid media
- Vapor phase dephenolization
- Ion exchange resins

Ammonia Recovery

Dephenolized wastewaters and the wastewaters from purification units and the hydrogen generation module are combined and sent to the ammonia recovery unit. The first step in the treatment of the sour water is to selectively remove the acid gases H_2S and CO_2. Ammonia can be tied up with the water by controlling the pH. If the pH is about 5, almost all the ammonia will be tied up as a salt, and only acid gases will be stripped off. The Phosam-W process and the Two-Stage All Distillation process are generally for ammonia recovery. The Two-Stage All Distillation process is described in the following subsections.

Two-Stage All Distillation Process

A flow diagram for the Two-Stage All Distillation process is shown in Figure 63. The control effectiveness, process

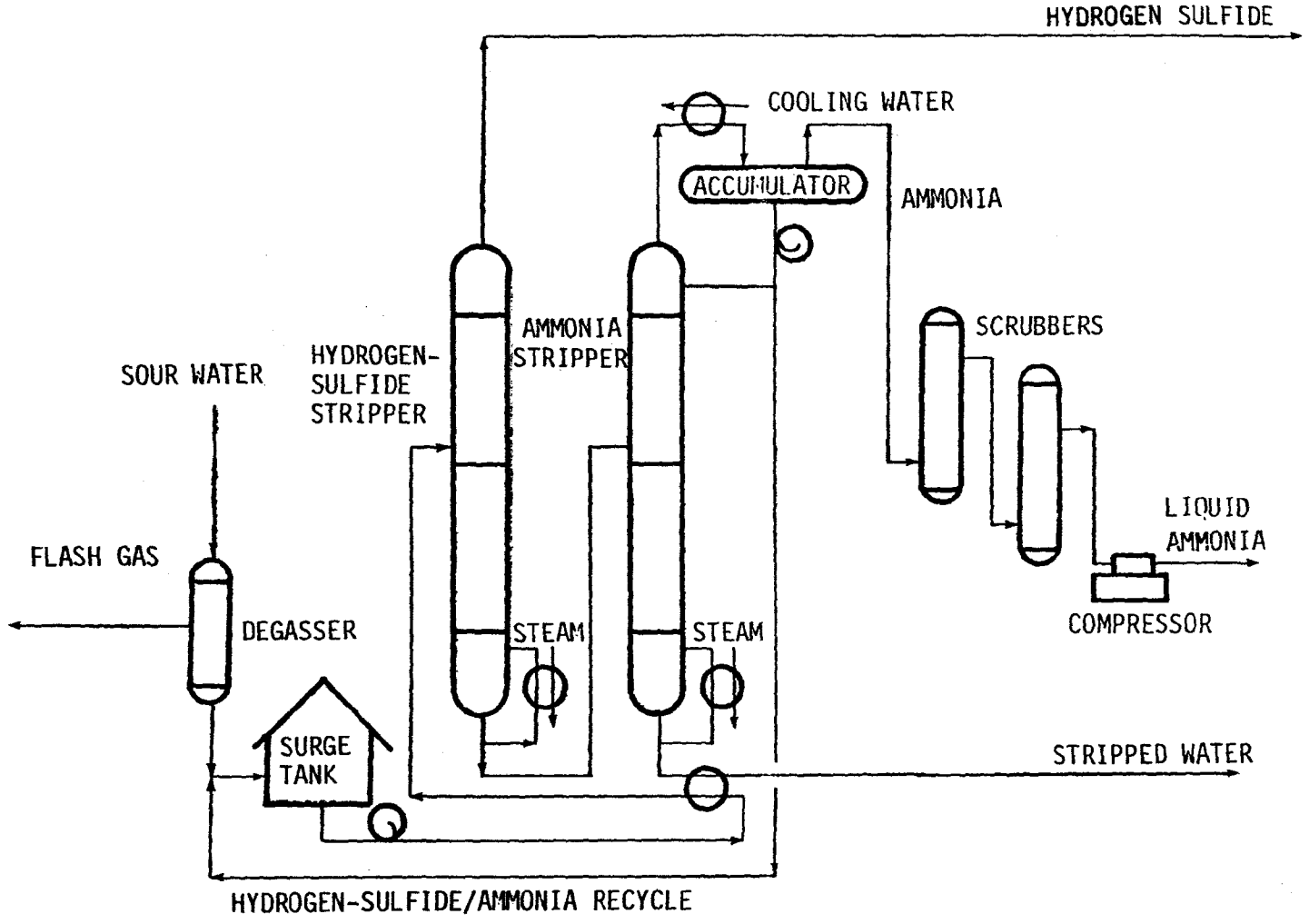

Figure 63. Two-Stage all distillation process for ammonia separation (2)

advantages, and process limitations are as follows:

- Control Effectiveness

  Depends upon process operation; however, typical results are as follows:

  - Stripped water is 99.9% water by wt.
  - NH_3 in stripped water is only 50 ppm.
  - H_2S in stripped water is only 10 ppm.

- Process Advantages

  - Does not require high pressure as does refinery equipment
  - Facilitates the recovery of H_2S and NH_3 for further processing as by-products
  - Already proven in commercial applications
  - Capital and operating costs are moderate
  - Can utilize previously existing equipment

- Process Limitations

  - Process is proprietary, and a royalty must be paid for its use
  - Discharge streams require further environmental control

Biological Oxidation

In biological treatment of wastewater, dissolved and colloidal organic matter are subjected to action by bacteria and other microorganisms. Organic matter is removed from water by conversion, partly to carbon dioxide and partly to a settled organic sludge consisting mostly of dead and live microorganisms which have fed on the organic matter. Various biological treatment systems can be used to degrade the organics in wastewaters from coal conversion processes. A feed of nearly constant characteristics can eliminate the upsets due to shock loads or abrupt changes in composition. Constant load is essential for treating high-strength wastewaters by biological means. For coke plant wastewaters it has been recommended that a storage capacity equal to five or more days of feed liquor be provided for equalization.

The effectiveness of various methods, the process selectivity factors, and the advantages and limitations of biological oxidation processes are given below (62):

Effectiveness of Methods

	Range of % removal					
	Sulfides	BOD	COD	Suspended solids	Oil	Phenols
Activated sludge	97-100	88-90	60-85			95-99+
Trickling filters	-	60-85	30-70	50-80	50-80	
Waste stability ponds (Aerobic)	-	40-95	30-65	20-70	50-90	
Aerated lagoons	95-100	75-95	60-85	40-65	70-90	90-99
Cooling tower oxidation (air stripping)	-	90+	90+			99.9
Thiocyanates	70% removed by all processes					

Process Sensitivity

- Temperature: Biological oxidation of dissolved organics is optimum in the temperature range of 15-40°C. In this range, as the temperature increases so does the amount of dissolved organics which are oxidized. However, when the maximum temperature is exceeded the microorganisms are adversely affected and the stability of the biological oxidation process is upset.

- pH: The pH level of the waste stream influences the efficiency of biological oxidation. The optimum pH level is 7.0; when the pH is below 5.5 or above 9.5, the microorganisms cannot exist. The pH level also influences the efficiency of thiocyanate removal.

- Presence of oxygen: Oxygen is required for oxidation of organics in the waste stream. The greater the amount of O_2 available, the more able the process is to resist shock organic loadings.

- Organic and hydraulic loading: Biological oxidation is highly dependent upon both organic and hydraulic loadings. As the organic loading increases, the total amount of organic material oxidized increases, however, the percent of total material oxidized decreases. The optimum feed-to-microorganism ratio is 0.2 - 0.5:1.0. An excessive hydaulic loading results in a foaming of trickling filters and a decrease in efficiency of biological oxidation.

- Heavy metals: The presence of heavy metals can have an adverse effect on the efficiency of the biological oxidation process, particularly if a rapid change in their concentration occurs.

Process Advantages

- Effectively reduces the BOD and phenol level in industrial wastewater
- Has wide applicability to industrial applications and has been proven in several applications
- Comparatively inexpensive water treating process
- Removes some amounts of trace metals, ammonia, and cyanides that may be present in waste (small when compared to phenol)

Process Limitations

- Highly sensitive to pH levels
- Highly sensitive to presence of heavy metals
- Strongly influenced by organic and hydraulic loadings; consequently, susceptible to operational upsets
- In instances where ponds and lagoons are used, large tracts are required
- Highly dependent on oxygen supply

- Requires the presence of nutrients (62)

Activated Carbon Adsorption

Carbon adsorption could be utilized as a tertiary treatment method for polishing the effluent water from the biological treatment system. Some organics, such as cyanides, may not be completely destroyed by the biological treatment. Also, if a specific wastewater stream has a high concentration of cyanides and trace elements that are harmful to microorganisms, this water should be treated directly by activated carbon adsorption. A flow schematic of activated carbon adsorption is shown in Figure 64. The control effectiveness and process advantages and disadvantages are as follows (62):

Control Effectiveness--

Adsorption has performed so well in removing dissolved organics from wastewater streams that it is normally used when a water of high quality is desired. Adsorption has exhibited the following removal efficiencies:

- Phenol - 99%
- COD - 81%
- Cyanide - 1%

Process Advantages

General - Adsorption makes it economically possible to purify streams that contain only small amounts of impurities that would otherwise be impossible to clean.

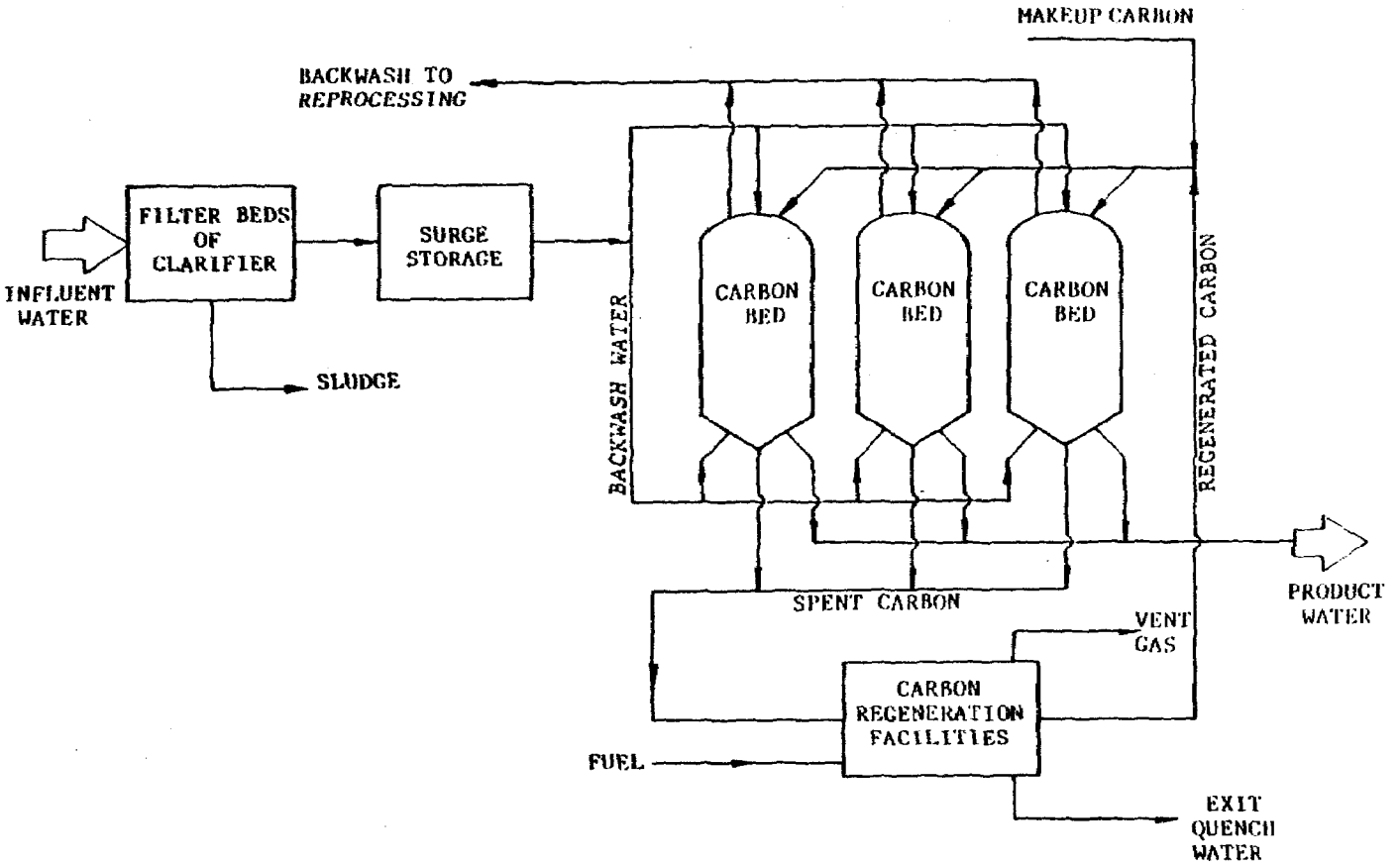

Figure 64. Wastewater treatment with activated carbon (62)

Specific

- Adsorption has high ability to reduce impurity concentration at ambient conditions
- Adsorption is not affected by slight temperature change, fluctuations in organic loading, or toxicity
- Adsorption has wide applicability to many industrial wastewater problems
- Adsorption is not upset by fluctuations in hydraulic rates

Process Disadvantages

- Adsorption does not facilitate recovery of adsorbed dissolved organics; consequently, regeneration of the adsorbent is necessary
- Regeneration of adsorbent generates aqueous and gaseous streams that may require further control
- Regeneration of adsorbent may not be complete; therefore, the removal efficiency of the adsorbent may decrease with time
- High operating costs are sustained due to frequent regeneration of adsorbent

Solids Waste Controls

Solids waste controls by coal liquefaction will involve various technologies, including:

- Pyrolysis
- Incineration
- Recovery and use
- Land disposal
- Landfilling
- Pond storage
- Chemical fixation

Pyrolysis--

The solids waste removed from the phase separation module of the three coal liquefaction systems described in this report includes large quantities of carbon containing tars and other high-boiling residues. Process economics require that these residues be pyrolyzed, or otherwise treated, to recover additional liquid product. Multimedia and other style furnaces have been utilized or suggested for this purpose.

Incineration--

The carbon-containing residues, both before and after pyrolysis, still contain sufficient carbon content to make removal through some combustion process economically and environmentally desirable. The most commonly suggested combustion or incineration method is to use these residues for hydrogen production.

Recovery and Use--

Recovery of by-products such as sulfur, phenol, and ammonia, and regeneration of spent catalysts serve as examples of process wastes that may be converted into useful products. Processes for sulfur, phenol, and ammonia have been covered in preceding sections. Catalyst regeneration is specific to the process involved.

Land Disposal--

One of the most economical methods of solids waste disposal is to put it on surface land, or in mine pits or other existing underground cavities. Mining, smelting, and fertilizer industries which have large quantities of solids waste use this technique. It is anticipated that coal liquefaction systems will also use this approach.

Landfilling--

Landfilling ranges in costs and complexity from simple to secured categories. Simple landfilling consists of placing the solids waste in a prepared pit and covering it with soil. Secured landfilling involves impervious pit liners, monitoring the pit area for leachate, drainage provisions, pit covers, indexing the waste location, perpetuity maintenance, and other factors which increase landfilling costs by at least an order of magnitude.

Pond Storage--

Solids waste which is naturally waterborne (such as suspended solids) or can be handled in this fashion (such as mine tailings) is often settled and stored in ponds. Ash is a particular solids waste that is so handled. Since ash will probably be a major solids waste from the hydrogen generation, it is anticipated that pond storage will be a control technology utilized in coal liquefaction.

Chemical Filtration--

Various processes have been developed for changing liquid or slurry wastes into less water soluble solids. Hazardous and toxic wastes such as radioactive residues, some chemicals, and biologically active substances, have been controlled in this fashion. The costs for this technology normally limit its range of usefulness.

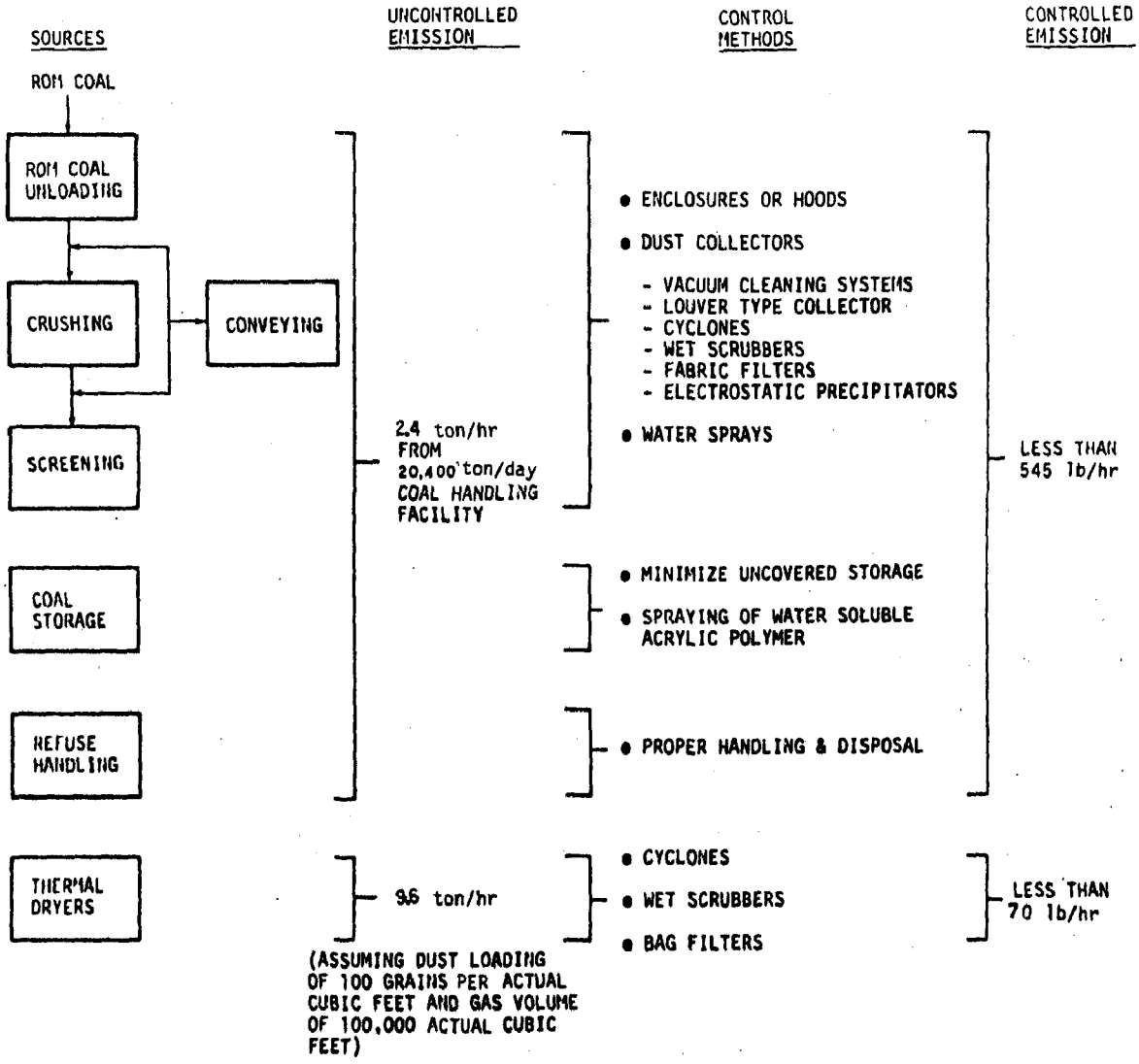

Figure 65. Particulate emissions from coal preparation and handling (61)

ENVIRONMENTAL DISCHARGES AFTER APPLICATION OF TREATMENT AND CONTROL TECHNOLOGY

Presently there are no environmental standards for coal conversion plants. However, establishing environmental standards seem inevitable. New standards will be set for hazardous or environmentally dangerous constituents from conversion plants with emphasis on health effects, land use, and geography. These standards will probably be based on the existing standards for petrochemical, coke manufacturing, and power plants. They will most likely add to the need for treatment and control of wastes. Although the identification of multimedia waste streams for coal liquefaction processes is necessary for estimating environmental discharges, it is the after-treatment discharges that have environmental significance. This section gives estimates of these environmental discharges.

Air Emissions

Table 68 shows estimated acid gas emissions for the three processes of this report. Particulate emissions from coal preparation and handling are given in Figure 65. Emissions from other portions of the systems, such as steam and power generation, will add additional emissions.

TABLE 68. ACID GASES BEFORE AND AFTER TREATMENT**
(EXTRACTED FROM SECTIONS 4, 5 & 6)

Component	Synthoil		H-Coal		EDS	
	Before	After	Before	After	Before	After
H_2S	757	2-10* ppm	819	2-10* ppm	398	2-10* ppm
H_2O	2.4	133	8.6	145	---	70
NH_3	6.6	6.6	1.5	1.5	8.2	8.2
Hydrocarbons	41.4	41.4	20	20	3.9	3.9

(continued)

TABLE 68. (continued)

	Synthoil		H-Coal		EDS	
	Before	After	Before	After	Before	After
CO	1.0	1.0	---	---	---	---
CO_2	9,336	9,336	9,232	9,232	6,652	6,652
N_2	48.3	48.3	51	51	35.2	35.2
SO_2	0.1	*	0.22	*	0.15	*
HCN	1.99	trace	2.1	trace	1.5	trace
NO_x	trace	trace	trace	trace	trace	trace
Total feed	10,195	9,566	10,134	9,449	8,000	6,769
Sulfur recovered	716		775		377	

* Released as SO_2 after flaring.
**Values in metric tons per day except where otherwise indicated.

Wastewater Effluents

Figure 66 shows the application of control and treatment technology to coal liquefaction system wastewaters. Table 69 gives the sour water characterization before and after treatment for the H-Coal, Synthoil, and EDS systems. Other wastewater discharges from coal storage and preparation, steam and power generation, cooling tower blowdowns, and raw water treatments are covered elsewhere in the report.

TABLE 69. WASTEWATER CHARACTERIZATION BEFORE AND AFTER TREATMENT *(EXTRACTED FROM SECTIONS 4,5 & 6)

Component	H-Coal		Synthoil		EDS	
	Before	After	Before	After	Before	After
H_2	4,155	4,155	3,411	3,411	1,776	1,776
CO_2	118	Completely Removed	---	---	---	---
H_2S	175	<0.15 ppm	11	<0.15 ppm	Not quantified	<0.15 ppm
NH_3	104	10 ppm	125	10 ppm	180	10 ppm

(continued)

TABLE 69. (continued)

Component	H-Coal		Synthoil		EDS	
	Before	After	Before	After	Before	After
Phenols }	24	<0.1 ppm	9.4	<0.1 ppm	17.7	<0.1 ppm
Oils }		<5 ppm		<5 ppm		<5 ppm
Recovered by-products	24		9.3		14	
Phenols & oils	24		9.3		14	
Ammonia	104		104		173	

*Values in metric tons/day except where otherwise noted.

Solids Waste

The solids waste includes various constituent materials. Ash consists of a variety of metallic oxides and trace element compounds. Coal and char particles contain organic and mineral materials. Elemental sulfur may be generated as solids waste from hydrogen sulfide control technologies. Limestone sludges, primarily calcium sulfite and calcium sulfate, may be alternately generated. Zinc sulfide, the primary constituent of spent sulfur guard reactor absorbents, also may be present as will spent catalyst from applicable processes. Wastewater treatment sludges, a mixture of coal tar residues, sand, coal fines, and treatment by-products may also contain untreated quantities of phenols, ammonia, cyanides, and other potentially hazardous materials (62).

About 25 percent of the raw coal input is disposed of as waste. For a coal conversion plant processing 18,500 metric tons per day of prepared coal, the coal refuse will amount to 4,650 metric tons per day. The coal refuse consists of waste coal, slate, carbonaceous and pyritic shales, and clay associated with a coal seam. There are two basic types of coal refuse: coarse and fine. The coarse refuse is

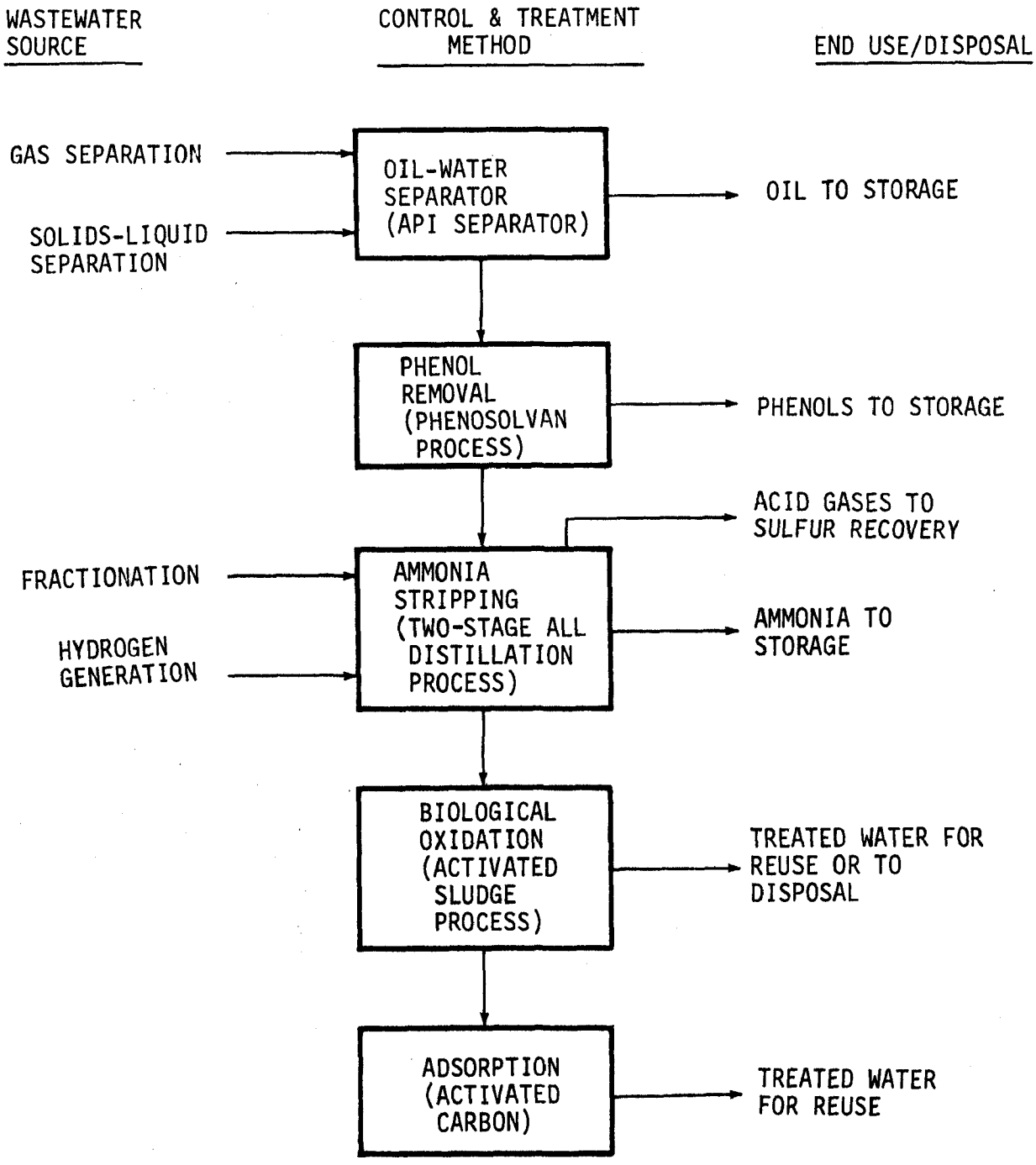

Figure 66. Application of control and treatment technology to coal liquefaction process wastewaters (59)

separated mainly by crushing the lump coal to a smaller size; the fine refuse is mainly separated from the thickeners as underflow and impounded by settling ponds. The coarse refuse is normally disposed of in an embankment (62). Chemical analysis must be utilized to identify the specific composition of solids waste materials and to determine the concentration of these materials. If necessary, the environmental impacts of some materials may need to be determined. In effect, all leachable materials present in concentrations exceeding environmentally acceptable standards should be identified.

The problems associated with solids waste disposal must be resolved to reach the desired goal of minimized environmental degradation. Landfilling and minefilling techniques will require additional sophistication to confidently prevent contamination of the surrounding area. Undesirable ash constituents can re-enter the environment as a result of groundwater leaching. Little is known of the fate of landfilled trace elements, spent catalysts, or spent absorbents. Upon identification of hazardous leachable materials present in solids waste, leaching studies may be needed to determine the alternatives available to minimize detrimental environmental effects. Impervious liners may be used as a physical means of preventing groundwater percolation. They, in turn, prevent leaching. Chemical stabilization, to render leachable constituents insoluble or inert, may be a necessary control method in some instances. A combination of physical and chemical control methods may be the required technique (62).

Subsidence, the gradual settling of landfill materials, is another problem. In some cases, compacted wastes reduce subsidence effects, allow more waste disposal per unit

volume of storage space, and reduce permeability of landfilled wastes. Compacted wastes have fewer leaching problems, and are currently under consideration as a means of improving solids waste disposal techniques. More information is needed regarding the subsidence and compaction properties of the bulk solids waste generated by liquefaction processes.

Although no secondary wastes are anticipated after landfilling, light hydrocarbon gases may be generated due to reaction of organic materials present. Furthermore, combustible materials may generate gases as well as cause underground fires. Unsuspected or undetected materials may undergo groundwater leaching. Periodic sampling and analysis of landfill materials and surroundings will be required to determine if secondary wastes are generated and, if necessary, to develop control technology modifications which will prevent the generation of such wastes (62).

SECTION 8

ENVIRONMENTAL EFFECTS AFTER TREATMENT

INTRODUCTION

In general, the pollution expected from a coal liquefaction plant differs from the pollution expected from a coal combustion plant in that the reducing atmosphere of the liquefaction plants should give off pollutants in their reduced rather than their oxidized state. In addition, coal liquefaction synthetic oil products differ from those for a petroleum refinery in that they will probably have more aromatic condensed ring and carcinogenic substances than the natural crude oil products. These will be important aspects for users and handlers of such products to remember. The potential hazards remain to be determined.

Air pollutants from coal liquefaction processes and auxiliary operations may result from flue gas emissions, fugitive emissions, uncondensed gases, evaporation from the wastewater storage and biotreatment ponds, and emissions from coal cleaning and preparation. All of these may be possible sources of particulates and volatilized organic and nonorganic compounds. Ash will be cleared from the gaseous effluents mainly during treatment and control operations, and only residual particulates will be left.

Flue gas emissions may include carbon monoxide, ammonia, and unburned hydrocarbons as well as nitrogen and sulfur oxides. Fugitive emissions may include wind-blown dust from the coal piles; dust from the coal drier, cyclones, and screening and washing fines; dust from the stacker-reclaimer; coal conveyors, waste fines transfer, waste storage, reactor charging, ash discharging; pipe and valve leaks in liquid waste transfer; evaporation from liquid waste storage, waste dust and ash transfer, waste dust and ash storage, or sulfur pile storage. Fugitive emissions from the grinding, pulverizing, and drying of coal include particulates and hydrocarbon vapors. The vent stream from acid gas removal contains sulfur and combustibles. Evaporation from storage ponds and biotreatment ponds contains phenols and other wastes. The cooling towers are a source of heat and mists. Cooling towers can also be a source of atmospheric emissions of pollutants picked up from leaks of sour water, oil streams, and acid gas wastes.

Some offensive odors may originate in the vicinity of the coal conversion plant. Also, when the plant is closed for cleaning, some odors not normally detected may become apparent, since parts of the plant, which normally operate as a sealed system, may be open to the outside air.

Coal conversion plants use and produce large quantities of water, which become either a component of gas and wastewater streams from process and auxiliary operations, vapor evaporated to the atmosphere, or a component of sludge or moist wastes. There are several sources of pollutants for the process water circulating throughout the plant. These include blowdowns, nonoily filter backwash, stormwater effluent, ash and fly ash contacts, treatment ponds, and possible product or process spillage or leakage.

Outside storage of coal at or near the site will be necessary to assure continuous plant operation. Coal is stored either in active piles or storage piles. Active coal piles are open, and contact with air and moisture results in sulfuric acid from oxidation of the metal sulfides in the coal. The precipitation seeps into the coal piles. When rain falls on these piles, the acid is washed out and eventually winds up in the coal pile runoff. Storage piles are sometimes sprayed with a tar to seal their outer surface. In such cases, the precipitation runs down the side of the pile.

The waterborne wastes may contain phenols; sulfur; nitrates; trace metals; ammonia; cyanides; trace amounts of carboxylic acids; significant amounts of acetic acid; light hydrocarbons including benzene, toluene, and xylene; alkylated benzenes; naphthalene; fatty acids; phenols; cresols; thiocyanates; alkyl substituted phenols and napthols; suspended particulates; dissolved solids, tars, oil, ash, dust; and floor scrubbing detergents. While phenols are anticipated to provide the bulk of the organic load in the aqueous effluents from the process itself, they also are the most easily removed. Thiophenes, on the other hand, are produced in smaller quantities, but the removal efficiency by wastewater treatment is unknown. The polycylic aromatic hydrocarbons (PAH) are expected to compose the smallest fraction of the organic load with a wide range of expected removal efficiencies. In general, the removal efficiency for PAH by biodegradation is inversely proportional to the molecular weight of the compound; the greater the number of rings, the more difficult the removal.

Land-destined wastes include excess residue, quenched ash, sulfate sludges from the power plant scrubbers, elemental sulfur (if it is not sold), spent catalyst, effluent water biotreatment sludge, sanitary sewage biotreatment sludge, water clarifier sludge, the mine and associated coal preparation by-products (mainly tailings), and community and related industrial wastes.

A typical biological oxidation system will produce large amounts of cellular material in the form of sludge which must be disposed of, for example, by landfilling or incineration. This may introduce some pollutants, particularly trace elements, into the atmosphere and waterways. The sludge from the biological oxidation unit may also create odor problems.

Coal tars and derivatives have a long history of carcinogenicity including occupational cancer among chimney sweeps in London in the late 1700s, recognition of carcinogenicity of coal tar, and occurrence of cancer among coke plant workers. Direct hydrogenation of coal to produce coal liquids has particular potential for producing environmentally and occupationally troublesome materials.

The very structure of coal, and the hydrogenating conditions used for liquefaction, indicate that more polycyclic compounds will be formed than found, for example, in petroleum products. The coal liquefaction products will be more analogous to coal tar industry products than to petroleum products. In general, many of the polycyclic compounds are known to be carcinogenic and therefore potentially more hazardous to the environment than the aliphatic hydrocarbons that constitute most of the petroleum fractions.

Several known inorganic carcinogenic substances (e.g., nickel, arsenic, etc.) will also be present in coal liquefaction products and waste products. These inorganics may appear either as volatile or particulate emissions, contaminants of coal chemicals, and/or components of the carbonization residue.

Inorganic trace elements in the waste products of coal liquefaction may be present in several chemical forms. The biological origin of coal indicates that porphyrin-type compounds may be present and may survive the liquefaction process. Porphyrins are important carriers of vanadium and nickel in crude oil. The relatively high partial pressures of carbon monoxide may also result in the formation of traces of carbonyls, especially in the cases of the transition series metals. Nickel, iron, and cobalt carbonyls are the most significant carbonyls in the petroleum industry. With the exception of ferrocene, Metallocenes (metal atoms sandwiched between two aromatic rings), if formed, will probably decompose, especially in the cases of nickel, chromium, vanadium, tantalum, molybdenum, and tungsten. Some metals form arene carbonyls (metal atoms sandwiched between an aromatic ring system and carbon monoxide) which may be more stable than their metallocene counterparts and must be considered as one of the most likely types of organometallics to be found in coal liquids. The possible presence of metal alkyls must not be overlooked. Several metal and metalloid elements form relatively stable organic hydrides of the general formula R_nMH_{4-n} where R represents an organic group, M represents a metal, and H represents hydrogen. These hydrides may be formed in the reducing atmosphere of the liquefaction process and, once formed, are relatively stable. The possibility that metal chelates (with phenolic OH, carboxylic acid, and amine acid groups) may be present should be considered.

The discussion of the effects of sulfur and nitrogen oxides is limited, since these compounds are essentially associated with fossil-fuel combustion and would not be expected to be formed in the reducing atmosphere of the coal liquefaction processes.

One aspect of coal liquefaction that does have potential for significant sulfur and nitrogen emissions is the plant combustion of fuel for power and steam generation. High-sulfur bituminous coal may be used without processing as the fuel source for steam generation. Considerable controls would be required to reduce sulfur oxides emission to levels acceptable for meeting present pollution standards for similar industries.

COAL COMPOSITION AND WASTES

Coal is a complex organic material including inorganic trace metals and metallic compounds, bound nitrogen and sulfur, inert earth-like gangue, and high molecular weight carbon-containing matrices. Tables 70 and 71 give typical concentrations of various elements in coal. The numbers in parentheses are the range of data. The data of Table 72 summarize the data in Tables 70 and 71, providing some statistical treatment.

Tables 73 and 74 give the concentrations of elements that have been found in various coal-associated waste products. References to "filtered aqueous COED effluent dryer stage liquor" and "filtered aqueous COED effluent product separator liquor" in Tables 73 and 74 refer to aqueous effluents of a single experimental run of a coal conversion plant. The

TABLE 70. COMMONLY DETERMINED TRACE ELEMENTS IN COAL (PPM)

Reference	64	65	66	67	68											
Element	53 Coals from the Eastern Interior Region	51 Coals from the Northern Great Plains Region	73 Coals from the Appalachian Region	Washington State Univ. Study	West Virginia	Penn.	East Ky.	Ala.	Va.	Tenn.	Ill.	West Ky.	Ind.	Mont.	Wyo.	New Mex.	Ariz.
Aluminum (Al)																	
Antimony (Sb)				3.2±1.3													
Arsenic (As)				8.02±0.3	9	16	6	13	10	9	6	7	7	<6	1	2	2
Barium (Ba)				366±35	77	70	79	110	99	120	49	44	31	380	170	270	39
Beryllium (Be)	2.5	1.5	2.5		1.2	0.8	1.5	0.74	1.1	0.58	1.3	1.4	1.7	1.5	2.4	0.94	0.97
Boron (B)	96	116	25		20	15	19	30	13	24	81	70	85	60	36	43	49
Bromine (Br)				21.4±0.7													
Cadmium (Cd)											2.9			<0.1	0.46	<2.6	<0.54
Calcium (Ca)																	
Cesium (Cs)																	
Chlorine (Cl)				1020±90													
Chromium (Cr)	20	7	13	21±2	19	24	19	19	20	19	29	18	19	3	5.8	11	9.7
Cobalt (Co)	3.8	2.7	5.1	6.1±0.4	17	18	15	18	14	13	15	16	24	7.7	5.2	15	
Copper (Cu)	11	15	15		11	13	11	14	13	11	8.3	8.8	9.7	3.2	4.4	5.9	4.9
Europium (Eu)				0.33±0.04													
Fluorine (F)					70	90	30	90	50	120	59		50	70	160	160	70
Gallium (Ga)	4.1	5.5	4.9														
Germanium (Ge)	13	1.6	5.8														
Hafnium (Hf)				0.74±0.08													
Iodine (I)																	
Iron (Fe)				8920±40													
Lathanum (La)	5.1	9.5	9.4	11.9±0.5													
Lead (Pb)					4.9	5.2	4	3.7	6.1	4.9	33	6.4	7.2	4.8	0.61	4.7	3.9
Lithium (Li)					44	64	78	75	34	36	45	16	24	27	19	16	19
Magnesium (Mg)																	
Manganese (Mn)					21	21	26	19	42	23	73	19	26	57	14	19	9.7
Mercury (Hg)					0.12	0.20					0.18		0.08	0.07	0.05	0.08	0.05
Molybdenum (Mo)	4.3	1.7	3.5		6.2	9.8	5.2	11	8.3	7.8	8.8	7.4	5.2	4.8	2.2	2.0	0.97
Nickel (Ni)	15	7.2	14	21±3	18	20	16	17	22	16	25	16	33	3.3	4.1	8.1	4.9
Phosphorus (P)																	
Potassium (K)				3300±1100													
Rubidium (Rb)				23±2													
Scandium (Sc)				3.98±0.38													
Selenium (Se)				3.66±0.4	3.4	3.7	3.1	5.1	4.4	4.9	2	3.1	4	3	0.8	2.0	2.1
Silicon (Si)																	
Sodium (Na)				424±19													
Strontium (Sr)				142±20													
Sulfur (S)																	
Tantalum (Ta)				0.33±0.05													
Thurium (Th)				3.3±0.2													
Tin (Sn)	1.3	0.9	0.4		1.5	1.1	4.6	2.2	2.3	1.8	2.6	2.5	0.74	1.1	1.4	1.9	0.97
Titanium (Ti)	450	591	390	1135±56													
Uranium (U)																	
Vanadium (V)	35	16	21	40±5	30	33	29	31	33	34	35	32	35	12	15	25	9.7
Yttrium (Y)	7.7	13	14														
Zinc (Zn)					17	22	15	22	23	23	140	48	73	42	37	19	9.7
Zirconium (Zr)	44	59	7.6		63	68	60	56	44	45	88	77	100	77	39	110	39

(continued)

TABLE 70. (continued)

Reference	67				68			69		70	71	
Element	Many U.S. Coals	Utah Coal	Penn. Coal	NBS Standard	Illinois Basin	Appalachian Coal Fields	Western U.S.	B Seam Emma Mine Utah	Lower Dekoven Seam, Will Scarlett Mine, Ill.	Mining City Seam, Jerry Mine, Kentucky	Illinois	Forty-eight Coals from the Eastern and Southwestern Interior Region
Aluminum (Al)					12,000 (4,300-30,000)	17,000 (11,000-31,000)	10,000 (3,100-22,000)				13,000	
Antimony (Sb)		1.52	0.48	3	1.3 (0.1-8.9)	1.6 (0.25-7.7)	0.58 (0.18-3.5)				5	
Arsenic (As)	5	0.828	34.9	8	14 (1.0-120)	25 (1.8-100)	2.3 (0.34-9.8)				14	
Barium (Ba)	500			360	100 (5-750)	200 (72-420)	500 (160-1,600)					
Beryllium (Be)					1.7 (0.5-4.0)	1.3 (0.23-2.6)	0.46 (<0.10-1.4)	0.4	0.8	0.2	2	1.1
Boron (B)					110 (12-230)	42 (5.0-120)	56 (16-140)	12	25	7	102	33
Bromine (Br)		8.07	36.1	20	13 (0.6-52)	12 (0.71-26)	4.7 (0.50-25)				15	
Cadmium (Cd)		16.2	2.89		2.2 (<0.1-65)	0.24 (<0.10-0.60)	0.18 (<0.10-0.60)	0.2	4	1.4	3	
Calcium (Ca)	10,000	<2,000	4,300		6,700 (100-27,000)	4,700 (900-26,000)	17,000 (4,400-38,000)				8,000	
Cesium (Cs)		0.11	1.78		1.4 (0.5-3.6)	2.0 (0.40-6.2)	0.42 (0.02-3.8)					
Chlorine (Cl)				950	1,400 (100-5,400)	1,700 (100-8,000)	300 (100-1,300)				1,400	
Chromium (Cr)	10	4.13	38.4	20	18 (4.0-60)	20 (10-90)	9.0 (2.4-20)	25	25	<1.5	14	13
Cobalt (Co)	5	1.02	6.0	6	7.3 (2.0-34)	9.8 (1.5-33)	1.8 (0.60-70)	25	12	4	10	4.6
Copper (Cu)	15	5.85	23.2		14 (5.0-44)	18 (5.1-30)	10 (3.1-23)	12	25	7	15	11
Europium (Eu)				0.3	0.26 (0.1-0.87)	0.52 (0.16-0.92)	0.20 (0.07-0.80)					
Fluorine (F)					67 (29-140)	89 (50-150)	62 (19-140)				60	
Gallium (Ga)	7				3.2 (0.8-10)	5.7 (2.9-11)	2.5 (0.80-6.5)				3	2.0
Germanium (Ge)	5				6.9 (<1.0-43)	1.6 (<0.10-6.0)	0.91 (<0.10-3.0)				7	5.9
Hafnium (Hf)				0.8	0.54 (0.13-1.5)	1.2 (0.58-2.2)	0.78 (0.26-1.3)					
Iodine (I)					1.7 (<0.24-14)	1.7 (<0.33-4.9)	0.52 (<0.20-1.0)					
Iron (Fe)	10,000	2,890	24,300	8,700	20,000 (4,500-41,000)	15,000 (5,000-26,000)	5,300 (3,000-12,000)				20,000	
Lathanum (La)	10	9.7	14.9	10	6.8 (2.7-20)	15 (6.1-23)	5.2 (1.8-13)					8.5
Lead (Pb)					32 (<0.8-220)	5.9 (<1.0-18)	3.4 (<0.70-9.0)	<0.02	<0.02	<0.02	35	
Lithium (Li)												
Magnesium (Mg)	<2,000	<1,000	<10,000	4,400	500 (100-1,700)	600 (200-1,500)	1,400 (300-3,900)				500	
Manganese (Mn)	5	1.42	28.2		53 (6.9-210)	18 (2.4-61)	49 (<1.4-220)	12	125	4	50	
Mercury (Hg)	0.012	0.05	0.73		0.2 (0.03-1.6)	0.20 (<0.05-0.47)	0.09 (0.02-0.63)				0.2	
Molybdenum (Mo)	5	1.65	3.73		8.1 (<0.3-29)	4.6 (<0.10-22)	2.1 (<0.10-30)	0.08	12	4	8	3.1
Nickel (Ni)	15	121	4,480	20	21 (7.6-68)	15 (6.3-28)	5.0 (1.5-18)	12	25	4	20	14
Phosphorus (P)					64 (<10-340)	150 (15-1,500)	130 (10-510)				70	
Potassium (K)	1,000	2,800	5,000	3,300	1,700 (400-5,600)	2,500 (600-6,800)	500 (100-3,200)				1,600	
Rubidium (Rb)	100	<5	28.8	23	19 (<2.0-46)	22 (9.0-63)	4.6 (<0.30-29)					
Scandium (Sc)	5	1.43	5.89	3.9	2.7 (1.2-7.7)	5.1 (1.6-9.3)	1.8 (0.50-4.5)					
Selenium (Se)	3	10.4	7.2	3	2.2 (0.4-7.7)	4.0 (1.1-8.1)	1.4 (0.40-2.7)				2	
Silicon (Si)					24,000 (5,800-47,000)	28,000 (10,000-63,000)	17,000 (3,800-47,000)				25,000	
Sodium (Na)	2,000	10,300	1,900	420	500 (--2,000)	400 (100-800)	1,400 (100-6,000)	5,000	2,500	150	500	
Strontium (Sr)				150	35 (<10-130)	130 (28-550)	260 (93-500)					
Sulfur (S)					36,000 (5,600-64,000)	23,000 (5,500-50,000)	7,600 (3,400-19,000)					
Tantalum (Ta)				0.3	0.15 (0.07-0.3)	0.33 (0.12-1.1)	0.15 (0.04-0.33)					
Thorium (Th)				3	2.1 (0.71-5.1)	4.5 (1.8-9.0)	2.3 (0.62-5.7)					
Tin (Sn)					3.9 (<0.2-51)	2.0 (<0.20-8.0)	1.9 (<0.10-15)				5	1.3
Titanium (Ti)				1,100	600 (200-1,500)	900 (500-1,600)	500 (200-1,300)	75	400	450	700	250
Uranium (U)	1	1.07	2.03		1.5 (0.31-4.6)	1.5 (0.40-2.9)	1.2(<0.30-2.5)					
Vanadium (V)	25			40	32 (11-90)	38 (14-73)	14 (4.8-43)	12	50	4	30	18
Yttrium (Y)												7.4
Zinc (Zn)	50	19.0	42.9		250 (10-5,300)	25 (2.0-120)	7.0 (<0.30-17)	25	125	<0.05	270	108
Zirconium (Zr)					47 (12-130)	45 (8.0-88)	33 (12-170)				70	

TABLE 71. TRACE ELEMENTS IN COAL THAT ARE NOT COMMONLY DETERMINED (PPM)

	Average (Range)							
Reference	48			67		68		
Element	Illinois Basin	Appalachian Coal Fields	Western U.S.	Utah	Penn.	Wyo.	New Mex.	Ariz.
Cerium (Ce)	14 (4.4-46)	25 (11-42)	11 (2.8-30)					
Dysporsium (Dy)	1.1 (0.5-3.3)	2.3 (0.74-35)	0.63 (0.22-1.4)					
Gold (Au)				0.03	0.06			
Indium (In)	0.16 (<0.01-0.63)	0.23 (0.13-0.37)	0.10 (<0.01-0.25)					
Lutetium (Lu)	0.09 (0.02-0.44)	0.22 (0.04-0.40)	0.07 (<0.01-0.43)					
Samarium (Sm)	1.2 (0.4-3.8)	2.6 (0.87-4.3)	0.61 (0.56-2.2)					
Silver (Ag)	0.03 (0.02-0.08)	0.02 (0.01-0.06)	0.03 (0.01-0.07)					
Tellurium (Te)						0.025	0.03	<0.02
Terbium (Tb)	0.02 (0.04-0.65)	0.34 (0.06-0.63)	0.21 (0.06-0.58)					
Thallium (Tl)	0.66 (0.12-1.3)							
Tungsten (W)	0.82 (0.04-4.2)	0.69 (0.22-1.2)	0.75 (0.13-3.3)					
Ytterbium (Yb)	0.56 (0.27-1.5)	0.83 (0.18-1.4)	0.38 (0.13-0.78)					

TABLE 72. SUMMARY OF TRACE ELEMENTS IN COAL (FROM TABLES 70 AND 71)

Element	Number of samples	Arithmetic mean	Geometric mean	Standard deviation	Standard error of the mean	Range
Aluminum	4	13000	12,761	2900	1500	10,000-17,000
Antimony	8	2.1	1.6	1.5	0.5	0.48-5
Arsenic	22	9.4	6.5	8.1	1.7	0.8-34.9
Barium	19	188	131	158	36	31-500
Beryllium	24	1.3	1.1	0.6	0.1	0.2-2.5
Boron	24	49	37	34.	7.	7-116
Bromine	8	16	14	10	3	4.7-36.1
Cadmium	14	2.6	1.1	4.1	1.1	0.1-16.2
Calcium	7	7500	6200	4900	1800	2000-17000
Cesium	5	1.1	0.75	0.84	0.37	0.11-2.0
Chlorine	6	1100	990.	490	200	300-1700
Chromium	29	16	14	8.4	1.6	1.5-39.4
Cobalt	28	10	8.0	6.6	1.2	1.02-25
Copper	27	12	11	5.2	1.0	3.2-25
Europium	5	0.32	0.31	0.12	0.054	0.2-0.52
Fluorine	16	81	74	37	9	30.-160
Gallium	9	4.2	3.9	1.7	0.56	2.0-7
Germanium	9	5.3	4.0	3.7	1.2	0.91-13
Hafnium	5	0.81	0.79	0.24	0.11	0.54-1.2
Iodine	3	1.3	1.1	0.68	0.39	0.52-1.7
Iron	9	13000	11000	7400	2500	2890-24300

(continued)

TABLE 72. (continued)

Element	Number of samples	Arithmetic mean	Geometric mean	Standard deviation	Standard error of the mean	Range
			Concentrations in ppm			
Lathanum	12	9.5	9.0	3.3	0.95	5.1-15
Lead	20	8.3	2.6	11	2.5	0.02-35
Lithium	13	38	33	22	6.1	16-78
Magnesium	8	2600	1400	3300	1200	500-10,000
Manganese	23	31	21	28	5.8	1.42-125
Mercury	15	0.15	0.10	0.17	0.04	0.012-0.73
Molybdenum	27	5.2	3.9	3.2	0.61	0.08-12
Nickel	29	170	17	830	150	3.3-4480
Phosphorus	4	104	97	43	22	64 -150
Potassium	9	2400	2000	1400	460	500-5000
Rubidium	8	28	19	30	11	4.6-100
Scandium	8	3.7	3.4	1.6	0.57	1.43-5.89
Selenium	22	3.6	3.1	2.1	0.44	0.8-10.4
Silicon	4	23500	23000	4700.	2300	17000-28000
Sodium	12	2100	1100	2900	840	150-10300
Strontium	5	140	120	80	36	35-260
Sulfur	3	22000	18000	14000	8200	7600-36000
Tantalum	5	0.25	0.24	0.094	0.042	0.15-0.33
Thorium	5	3.0	2.9	0.95	0.43	2.1-4.5

(continued)

TABLE 72. (continued)

Element	Number of samples	Arithmetic mean	Geometric mean	Standard deviation	Standard error of the mean	Range
			Concentrations in ppm			
Tin	19	1.8	1.6	1.0	0.24	0.4-4.6
Titanium	12	600	510	310	90	75-1135
Uranium	6	1.4	1.3	0.38	0.16	1 -2.03
Vanadium	26	27	24	11	2.2	4 -50
Yttrium	3	12	11	3.4	1.9	7.7-14
Zinc	23	57	27	73	15	<0.05-270
Zirconium	20	59	52	24	5.4	7.6-110
Cerium	3	17	16	7.4	4.3	11-25
Dysporsium	3	1.3	1.2	0.86	0.50	0.63-2.3
Gold	2	0.045	0.042	0.021	0.015	0.03-0.06
Indium	3	0.16	0.15	0.065	0.037	0.10-0.23
Lutetium	3	0.13	0.11	0.081	0.047	0.07-0.22
Samarium	3	1.5	1.2	1.0	0.59	0.61-2.6
Silver	3	0.027	0.026	0.0058	0.0033	0.02-0.03
Tellurium	3	0.025	0.025	0.0050	0.0029	<0.02-0.03
Terbium	3	0.19	0.11	0.16	0.093	0.02-0.34
Thallium	4	0.375	0.34	0.21	0.10	<0.02-0.66
Tungsten	3	0.75	0.75	0.065	0.038	0.69-0.82
Ytterbium	3	0.59	0.56	0.23	0.13	0.38-0.83

TABLE 73. CONCENTRATION (PPM) OF ELEMENTS IN VARIOUS COAL-ASSOCIATED WASTE PRODUCTS

Reference	72	73,74					67	75	
Element	West Virginia coal refuse	Anthracite ash	Low-volatile bituminous ash	Medium-volatile bituminous ash	High-volatile bituminous ash	Lignite ash	Coal liquefaction "fly ash"	Filtered aqueous COED effluent-dryer stage-liquor	Filtered Aqueous COED effluent-product separator-liquor
Aluminum (Al)	>25,000							0.3	3.0
Antimony (Sb)							6.9±0.5	0.003	0.007
Arsenic (As)							60.7±2.4	0.2	0.04
Barium (Ba)		866	740	896	1253	5027	2700±200	0.02	0.02
Beryllium (Be)	0.2-3	9	16	13	17	6		<0.0005	0.001
Boron (B)		90	123	218	770	1010		1.0	1.0
Cadmium (Cd)	0.25-1.0							<0.003	0.01
Calcium (Ca)	50-2000								
Chromium (Cr)	3-25	304	221	169	193	54	128±5	0.03	0.6
Cobalt (Co)	3-25	81	172	105	64	45	41.8±1.3	0.005	0.5
Copper (Cu)	12-50	405	379	313	293	655		0.02	5.0
Gallium (Ga)	3-25	42	41		40	23		<0.005	<0.005
Germanium (Ge)		<20	<20					0.005	0.001
Hafnium (Hf)							7.0±1.1	<0.005	<0.001
Iron (Fe)	7500-41,000						6.25±0.2	15.0	790.0
Lathanum (La)		142	110	83	111	62	82±2	<0.001	0.05
Lead (Pb)	20-150	81	89	96	183	60		0.003	1.0
Magnesium (Mg)	500-8000							1.0	50.0
Manganese (Mn)	65-1300	270	280	1432	120	688	496±12	0.003	15.0
Nickel (Ni)	25-250	220	141	263	154	129		0.03	10.0
Potassium (K)	500-1200						1.72±0.00		
Rubidium (Rb)							125±10	0.005	0.06
Scandium (Sc)	3-25	61	50	56	32	18	27.3±1.0	<0.001	<0.001
Silicon (Si)	>25,000								
Silver (Ag)	0.3-2.5	<1	<1	<1	<1	<1		<0.005	<0.005
Sodium (Na)	150-375						3200±300		
Strontium (Sr)		177	818	668	1987	4660	1700±300		
Tantalum (Ta)							1.67±0.13	≤0.1	≤0.1
Thorium (Th)							2.54±1.5	<0.001	≤0.01
Tin (Sn)		962	92	75	171	156		<0.005	0.1
Titanium (Ti)	300-3000						7400±300	0.05	0.3
Vanadium (V)	25-250	248	278	390	249	125	235±15	0.003	0.02
Ytterbium (Yb)		8	10	9	10	4		<0.003	<0.005
Yttrium (Y)	3-25	106	152	151	102	51			
Zinc (Zn)	30-85		231	195	310			0.2	5.0
Zirconium (Zr)	3-25	688	458	326	411	245		0.01	0.1

TABLE 74. TRACE ELEMENTS IN COAL LIQUEFACTION WASTE PRODUCTS WHICH ARE NOT COMMONLY DETERMINED (PPM) (75)

Element	Filtered aqueous COED effluent dryer stage liquor	Filtered aqueous COED effluent product separator liquor
Gold	<0.005	<0.5
Bismuth	<0.002	0.07
Bromine	<0.005	0.05
Cerium	<0.001	<0.01
Cesium	<0.005	<0.005
Dysprosium	<0.003	<0.005
Europium	<0.003	<0.005
Mercury	<0.003	0.007
Indium	<0.001	<0.003
Iridium	<0.003	<0.003
Lithium	<0.003	<0.003
Lutetium	<0.003	<0.005
Molybdenum	0.05	0.5
Niobium	<0.003	<0.005
Neodymium	<0.003	<0.003
Polonium	<0.0005	<0.001
Praseodymium	<0.001	≤0.05
Radium	<0.01	<0.01
Selenium	0.003	0.3
Samarium	<0.003	<0.003
Terbium	<0.003	<0.003
Tellurium	<0.003	<0.003
Thallium	<0.003	<0.003
Uranium	0.003	0.01
Tungsten	0.002	0.03

"dryer stage liquor" is the condensate from the drying of coal. The "product separator liquor" is water produced during the hydrogenation process.

Table 75 gives the background levels or "normal" concentration ranges of various elements in the environment which can be used to estimate whether the increased input of the elements resulting from the coal liquefaction will significantly increase the levels in the environment. Unfortunately, these tables are based on general data and cannot be used to indicate definite effects at specific sites.

Table 76 gives the concentration of various organic compounds found in different effluents and receivers. It can be used in a manner similar to Table 75 with similar restrictions. The presence and distribution of each individual pollutant in the air, water, land-destined wastes, or product are discussed below.

Table 77 shows factors for various elements which can be used to estimate the expected concentration of the element in the coal-associated waste product or the amount leached per day if the concentration in the coal or the amount in the associated receiving body of water or stream is known.

Table 78 provides information on 13 elements regarding their relative concentrations in the feed coal, product oil, and solids waste from liquefaction processing.

QUANTITIES AND COMPOSITION OF PROCESS AND NONPROCESS WASTE DISCHARGES

An attempt is made to quantify the various wastes from auxiliary processes discharged after receiving commonly

TABLE 75. CONCENTRATIONS OF ELEMENTS IN VARIOUS RECEIVERS OF EFFLUENTS

Element	Igneous rock (ppm)	Soils (ppm)	Fresh water (ppm)	Sea water (ppm)	Air ($\mu g/m^3$)	Marine plants (ppm)	Land plants (ppm)	Marine animals (ppm)	Land animals (ppm)	References
Aluminum	82,000	10,000-300,000	0.24	0.01	<3	60	0.5-4000	10-50	4-100	76,77
Antimony	0.2	2-10	$1.3\text{-}9.8\times10^{-4}$	$2.1\text{-}5.1\times10^{-4}$	<0.004	0.016-0.260	0.06	0.006-0.011	0.006	76
Argon	3.5		0.6	0.6	9300					76
Arsenic	1.8	0.1-40	0.000003-267	0.002-0.03	< 0.01	0.7-142.0	0.01-31.9	0.005-150	≤0.1-0.8	76,77,78,79
Barium	425	100-3000	0.054	0.000001-0.03		23-30	14-4000	0.2-3	0.75	76,77
Beryllium	2.8	0.01-40	0.00001-0.0012	$6\text{-}20\times10^{-7}$	<0.0001	0.001-0.66	0.01-2.00	0.01-0.36	<0.0003-0.002	76,79
Bismuth	0.17			1.7×10^{-5}			0.06	0.04-0.3	<0.004	76
Boron	10	2-100	0.013	4.6		120	50	20-50	0.5	76
Bromine	2.5	1-10	0.2	65		740	15	60-1000	6	76
Cadmium	0.2	0.01-0.7	<0.005-0.012	1.1×10^{-4}	5-20	0.4	0.04-0.5	0.01-151.6	≤0.5	76,77,78,79
Calcium	41,500	7000-500,000	15	400	< 2	10,000-300,000	18,000	1500-350,000	200-85,000	76
Cerium	60	50		4×10^{-4}			320		≤0.03	76
Cesium	1	0.2-25	2×10^{-4}	5×10^{-5}		0.07-0.39	0.01-22		0.064	76,77,80
Chlorine	130	100	3.9-2,019	19,000-20,000	1.2	4700	2000	5000-90,000	2800	76,79
Chromium	100	5-3000	0.0001-0.050	5×10^{-5}	<0.002	1-6	0.18-224	0.2-108	0.075	76,77,79,80
Cobalt	25	1-40	9×10^{-4}	2.7×10^{-4}	$<7\times10^{-4}$	0.7-12	0.04-2.8	0.5-5	0.03	76,78,80
Copper	55	2-100	<0.001-0.01	0.003	< 0.02	11	0.5-56	0.73-2208	2.4	76,79
Fluorine	625	30-300	0.09	1.3	<0.01	4.5	0.5-40	2	150-1500	76
Gallium	15	0.4-300	<0.001	3×10^{-5}		0.5-1	0.06	0.15-0.5	<0.006	76,77
Germanium	5.4	1-50		7×10^{-5}				0.3		76
Hafnium	3	3-6		$<8\times10^{-6}$		<0.4	<0.01		0.04	76
Helium	0.008			6.9×10^{-6}	5.2					76
Iron	56,300	1360-550,000	0.67	0.01	< 3	200-3370	50-1420	400	160	76,80
Lanthanum	30	1-5000		1.2×10^{-5}		0.05-10	0.085-370	0.1	0.001-0.27	76
Lead	12.5	2-200	<0.001-0.890	0.00002-0.0081	0.2	6.7-8.4	2.7	0.1-42	0.2-2	76,77,79
Lithium	20	7-200	0.0011	0.18		5.4	0.1	1	<0.2	76,77
Magnesium	23,300	600-6000	4.1	1350	<1	5200	3200	5000	1000	76
Manganese	950	100-4000	0.012	0.002	<0.01	53	630	1-60	0.02	76
Mercury	0.08	0.01-180	8×10^{-5}-4.0	3×10^{-5}-12.2		0.03	0.01-10.68	0.005-1.57	0.008-67.9	76,77,79
Molybdenum	1.5	0.2-5	3.5×10^{-4}	0.01	< 0.0005	0.45	0.9	0.6-2.5	<0.2	76

(continued)

TABLE 75. (continued)

Element	Igneous rock (ppm)	Soils (ppm)	Fresh water (ppm)	Sea water (ppm)	Air ($\mu g/m^3$)	Marine plants (ppm)	Land plants (ppm)	Marine animals (ppm)	Land animals (ppm)	Reference
Neodymium	28					5	≤460	0.5		
Nickel	75	6-40	0.01	<0.001-0.130	<0.002	3-17	0.05-134	0.03-25	0.8	14
Niobium	20			$1x10^{-5}$			0.3	<0.001-300		76,77,79
Phosphorus	1050	650	0.005	0.07		3500	2300	4000-18,000	17,000-44,000	76
Polonium	$2x10^{-10}$									76
Potassium	20,900	400-30,000	2.3	380		52,000	14,000	5000-30,000	7400	76
Praseodymium	8.2					5	≤46	≤0.5		76
Radium	$9x10^{-7}$	$8x10^{-7}$	$3.9x10^{-10}$	$6x10^{-11}$		$9x10^{-8}$	10^{-9}	$0.7-15x10^{-8}$	$7x10^{-9}$	76
Radon	$4x10^{-13}$		$1.7x10^{-15}$	$6x10^{-16}$						76
Rubidium	90	5-100	0.0015	0.12		7.4-47	1-115	20	17	76,77,80
Samarium	6						0.0055-23	0.04-0.08	0.01	76
Scandium	22	0.5-9		$4x10^{-6}$		0.07-0.45	0.001-3.3		$6x10^{-5}$	76,80
Selenium	0.05	0.05-12.0	0.0001-9	0.00005-0.00011		0.84	0.2	0.5-4	1.7	76,77,80
Silicon	281,500	330,000	6.5	3	<4	1500-20,000	200-5000	70-1000	120-6000	76
Silver		0.01-0.09	$1x10^{-6}$-260	$1x10^{-6}$-19.6		0.01-2.42	0.02-2.7	$1x10^{-4}$-83.6		76
Sodium	23,600	750-7500	6.3	10,500	1.1	33,000	1200	4000-48,000	4000	76
Strontium	375	300	0.08	8.1		260-1400	26	20-500	14	76,77
Tantalum	2			$<2.5x10^{-6}$				410		76
Tellurium	0.001						2-25			76
Thallium	0.45	0.1	<0.001-0.130	$<1.4x10^{-5}$-0.0130					<0.4	76,77,79
Thorium	9.6	5	$2x10^{-5}$	$5x10^{-5}$			0.45	0.003-0.03	0.003-0.2	76,80
Tin	2	2-200	$4x10^{-5}$	0.003	<0.01	1-17	<0.3	0.2-20	0.15	76,77
Titanium	5700	5000	0.0086	0.001	<0.01	12-80	1	0.2-20	<0.2	76,77
Tungsten	1.5	1		0.0001		0.035	0.07	0.0005-0.05	0.00025-0.005	76
Uranium	2.7	1	0.001	0.003			0.038	0.004-3.2	0.013	76
Vanadium	135	100	0.001	0.002	<0.001	2	1.6-3.5	0.14-2	0.15	76,77
Ytterbium	3						<0.0015-23	0.02	$1.2x10^{-4}$	76
Yttrium	33	50		$3x10^{-4}$			<0.6-830	0.1-0.2	0.04	76
Zinc	70	10-805	0.0003-5	0.001-0.0500	<0.07	38-150	1-840	0.5-1500	160	76,79,80
Zirconium	165	300	0.0026	$2.2x10^{-5}$		≤20	0.64	0.1-1	<0.3	76

TABLE 76. CONCENTRATION (PPB) OF ORGANIC COMPOUNDS IN VARIOUS EFFLUENTS AND RECEIVERS OF EFFLUENTS (79)

Compound	Industrial effluent	Municipal effluent	Natural waters	Drinking water supplies	Finished drinking water
Acenapthene	+		1.7		
Fluoranthene	+	0.352-16.35	0.140-0.360	0.026-0.169	0.015-0.090
Isophorone	275 metric tons/yr				<0.02
Ethylbenzene	12,300 metric tons/yr			+	+
Toluene	691,800 metric tons/yr. (40-280 ppb)	<1-150		+	<0.1-0.7
Benzene	87,000 metric tons/yr	<0.2-40	18-40	+	<0.1-0.3
Phenol	24,235 metric tons/yr (43,300-4,347,000 ppb)	ca. 100	<1.3-360		
Naphthalene	252 metric tons/yr (780-32,000 ppb)	3-50		1.0-1.4	
Benzidine	0.0045-140 ppb	<0.1	<0.2		<0.2

+ = detected but not quantified.

TABLE 77. LEACHING CHARACTERISTICS OF H-COAL SOLID WASTE (81)*

	Argon				Air			
	pH Value				pH Value			
Element	11.31	8.50	5.53	2.30	8.83	8.16	5.01	3.14
Aluminum	8.7×10^{-5}	2.9×10^{-5}	8.7×10^{-5}	3.3×10^{-4}	1.7×10^{-4}	$< 2.9\times10^{-5}$	$< 2.9\times10^{-5}$	3.2×10^{-4}
Antimony	< 0.3	<0.3	<0.3	<0.3	<0.3	< 0.3	< 0.3	< 0.3
Arsenic	< 0.67	<0.67	<0.67	<0.67	<0.67	< 0.67	< 0.67	< 0.67
Barium	$< 2.5\times10^{-3}$	$<2.5\times10^{-3}$	$<2.5\times10^{-3}$	$<2.5\times10^{-3}$	$<2.5\times10^{-3}$	$< 2.5\times10^{-3}$	$< 2.5\times10^{-3}$	$< 2.5\times10^{-3}$
Beryllium	$< 5.6\times10^{-3}$	$<5.6\times10^{-3}$	$<5.6\times10^{-3}$	$<5.6\times10^{-3}$	$<5.6\times10^{-3}$	$< 5.6\times10^{-3}$	$< 5.6\times10^{-3}$	$< 5.6\times10^{-3}$
Boron	3.7×10^{-2}	4.1×10^{-2}	4.3×10^{-2}	5.0×10^{-2}	3.7×10^{-2}	4.3×10^{-2}	3.9×10^{-2}	4.5×10^{-2}
Cadmium	0.075	0.075	0.075	0.075	0.075	0.075	0.075	0.075
Calcium	1.7×10^{-2}	2.0×10^{-2}	5.4×10^{-2}	6.2×10^{-2}	1.4×10^{-2}	2.2×10^{-2}	4.8×10^{-2}	6.3×10^{-2}
Chlorine	7.8×10^{-2}	7.0×10^{-2}	7.5×10^{-2}	6.4×10^{-2}	7.5×10^{-2}	7.1×10^{-2}	6.7×10^{-2}	7.5×10^{-2}
Chromium	$< 7.3\times10^{-4}$	$<7.3\times10^{-4}$	$< 7.3\times10^{-4}$	1.8×10^{-3}	$< 7.3\times10^{-4}$	$< 7.3\times10^{-4}$	$< 7.3\times10^{-4}$	1.1×10^{-3}
Cobalt	< 0.022	<0.022	< 0.022	< 0.022	< 0.022	< 0.022	< 0.022	< 0.022
Copper	$< 3.6\times10^{-3}$	$<3.6\times10^{-3}$	$< 3.6\times10^{-3}$	$< 3.6\times10^{-3}$	$< 3.6\times10^{-3}$	$< 3.6\times10^{-3}$	$< 3.6\times10^{-3}$	$< 3.6\times10^{-3}$
Fluorine	7.0×10^{-3}	1.2×10^{-2}	8.5×10^{-3}	8.4×10^{-3}	1.0×10^{-2}	1.2×10^{-2}	6.0×10^{-3}	8.6×10^{-3}
Iron (total)	$< 4.2\times10^{-6}$	$<4.2\times10^{-6}$	2.7×10^{-4}	3.8×10^{-3}	$< 4.2\times10^{-6}$	$< 4.2\times10^{-6}$	5.9×10^{-4}	1.3×10^{-3}
Lead	$< 3.0\times10^{-3}$	$<3.0\times10^{-3}$	4.7×10^{-3}	6.0×10^{-3}	$< 3.0\times10^{-3}$	$< 3.0\times10^{-3}$	6.0×10^{-3}	7.8×10^{-3}
Magnesium	7.1×10^{-4}	9.5×10^{-4}	3.6×10^{-3}	4.7×10^{-3}	5.9×10^{-4}	7.1×10^{-4}	3.2×10^{-3}	4.7×10^{-3}
Manganese	$< 2.6\times10^{-4}$	5.2×10^{-4}	2.2×10^{-2}	3.5×10^{-2}	$< 2.6\times10^{-4}$	1.3×10^{-3}	2.4×10^{-2}	3.3×10^{-2}
Molybdenum	< 0.03	<0.03	< 0.03	< 0.03	< 0.03	< 0.03	< 0.03	< 0.03
Nickel	$< 3.3\times10^{-3}$	$<3.3\times10^{-3}$	$< 3.3\times10^{-3}$	1.2×10^{-3}	$< 3.3\times10^{-3}$	$< 3.3\times10^{-3}$	$< 3.3\times10^{-3}$	$< 3.3\times10^{-3}$
Potassium	4.8×10^{-4}	6.0×10^{-4}	8.0×10^{-4}	1.0×10^{-3}	5.6×10^{-4}	5.6×10^{-4}	8.4×10^{-4}	1.1×10^{-3}
Silicon	$< 2.5\times10^{-5}$	$<2.5\times10^{-5}$	$< 2.5\times10^{-5}$	$< 2.5\times10^{-5}$	$< 2.5\times10^{-5}$	$< 2.5\times10^{-5}$	$< 2.5\times10^{-5}$	7.6×10^{-5}
Sodium	1.1×10^{-2}	1.1×10^{-2}		1.5×10^{-2}	1.1×10^{-2}	1.1×10^{-2}	1.2×10^{-2}	1.5×10^{-2}
Strontium	6.7×10^{-3}	8.7×10^{-3}	1.3×10^{-2}	1.6×10^{-2}	6.7×10^{-3}	8.0×10^{-3}	1.1×10^{-2}	1.7×10^{-2}
Sulfate	0.109	0.110	0.118	0.123	0.109	0.114	0.248	0.161
Thallium	< 0.2	<0.2	< 0.2	< 0.2	< 0.2	< 0.2	< 0.2	< 0.2
Tin	< 2	<2	< 2	< 2	< 2	< 2	< 2	< 2
Titanium	$< 5.9\times10^{-4}$	$<5.9\times10^{-4}$	$< 5.9\times10^{-4}$	$< 5.9\times10^{-4}$	$< 5.9\times10^{-4}$	$< 5.9\times10^{-4}$	$< 5.9\times10^{-4}$	$< 5.9\times10^{-4}$
Vanadium	< 0.02	<0.02	< 0.02	< 0.02	< 0.02	< 0.02	< 0.02	< 0.02
Zinc	2.8×10^{-4}	2.8×10^{-4}	1.7×10^{-3}	1.1×10^{-2}	1.4×10^{-4}	1.4×10^{-4}	8.5×10^{-4}	3.8×10^{-3}

*The values in Table 77 are ratios of the element concentration in the supernatent liquor of a 10% aqueous slurry of H-Coal solid waste to the element concentration in the sediment or precipitate. The slurry was adjusted daily to the pH shown until the pH remained constant. This took about 3 months. Only then was the supernatent concentration measured. Atmosphere in the sample container was either argon or air as shown.

TABLE 78. ELEMENT CONCENTRATION RATIOS - SOLID WASTE: FEED COAL AND PRODUCT OIL/FEED COAL (82)

Element	Ratios	
	Solid residue/ feed coal	Product oil/ feed coal
Beryllium	4.6(2.0-10.0)	$6.5(1.0\text{-}125)\times10^{-3}$
Boron	4.6(2.1-6.0)	$7.2(4.3\text{-}12.5)\times10^{-3}$
Cadmium	1.6(1.0-2.5)	
Chromium	2.2(1.0-3.2)	$2.3(0.8\text{-}4.1)\times10^{-3}$
Cobalt	2.6(0.5-5.0)	$2.4(0.83\text{-}4.8)\times10^{-3}$
Copper	3.8(2.1-5.7)	$1.4(1.2\text{-}1.7)\times10^{-3}$
Manganese	8.2(2.1-20.0)	$5.9(1.0\text{-}12.5)\times10^{-3}$
Molybdenum	4.2(3.3-5.0)	$4.2(0.0\text{-}8.3)\times10^{-4}$
Nickel	2.8(0.4-5.0)	$7.7(3.2\text{-}12.5)\times10^{-3}$
Sodium	2.9(0.2-5.3)	$2.7(1.0\text{-}6.0)\times10^{-3}$
Titanium	1.8(0.5-2.8)	$2.8(0.11\text{-}6.7)\times10^{-2}$
Vanadium	5.0(2.1-10.0)	$3.7(1.0\text{-}5.0)\times10^{-3}$
Zinc	2.0	$2.9(1.0\text{-}4.8)\times10^{-3}$

available treatment methods. Quantities and compositions are discussed in the multimedia context - airborne, waterborne, and solids waste emanating from the H-Coal, Synthoil, and EDS processes. The auxiliary processes include sulfur recovery, oxygen and hydrogen generation, water treatment and utility plants, and water cooling. An attempt is also made to characterize the major contaminants in liquefaction products and by-products.

Process Related Wastes, After Treatment

Essentially all materials entering the coal liquefaction plant may be accounted for in the final products or in the gas, liquid, or solids effluents. Because the liquefaction process development is in its early stages, however, detailed balances are not possible. These balances would give the quantity and chemical composition of the various inorganic and organic contaminants that may be discharged into, and ultimately interact with, the biotic and abiotic environments. Instead, the aim has been to make order of magnitude estimates and, wherever possible, state estimates as a range of values.

Airborne Wastes - Process Related--

The main point source for discharging process-related airborne wastes is in the tail gas streams from the sulfur recovery plant. Detailed composition of these streams is given in Section 7 (Table 66). Trace quantities of carbonyl sulfide (0.01 to 0.04 mole percent), and carbon disulfide (0.01 to 0.05 mole percent) could also be present (82).

Process-related flue gases are not likely to be a major source of airborne pollutants if by-product fuel gas is used in the preheaters and for process heat. This gas is purified

by acid gas treatment and is relatively free of contaminants. If the preheaters are coal-fired, pollution control technology would most likely be needed to meet regulatory standards for new coal-fired stationary sources.

Waterborne Wastes - Process Related--

Efficiencies for removing pollutants from wastewaters were discussed in Section 7 and are very useful for the quantification of contaminants entering water and land environments around coal liquefaction plants. In spite of the very efficient removal of some organics, such as phenols, from wastewaters in biological oxidation treatment ponds, multi-ring aromatic compounds, including the simplier polycyclics such as naphthalene, will likely pass undegraded through the biotreatment plant. Furthermore, substituting nitrogen or sulfur heteroatoms in multi-ring compounds or the alkylation of benzene retards microbial oxidation rates (33,84). Similarly, monohydric phenols are more fully degraded than polyhydric compounds. The polyaromatic phenols would be expected to be degraded even more slowly (83). Thus, both microbial oxidation and adsorption of organics to sediment appear highly dependent upon molecular size, with adsorption being significant only for compounds of two rings or higher (83).

Table 72 gave mean concentrations of trace elements in a number of U.S. coals. One distribution of selected elements (85) shows that most will be found in the process residues and in the final product. Based on the initial concentration of selected trace elements in the feed coal, the percentage discharged in the scrubber effluent from the Synthoil bench-scale unit is shown below (85):

Element	Cu	Cr	Mn	Ni	Cd	Pb
percent of initial concentration in the feed coal	2.7	2.1	0.04	0.3	3.1	14

Calculations using these data and the arithmetic average initial concentrations of elements for the coal given in Table 72 show that the concentration of these elements in the sour water from the Synthoil process is:

Element	Cu	Cr	Mn	Ni	Cd	Pb
Concentration (ppm)	0.3	0.3	0.01	0.5	0.08	1.2

Some of this metal content, along with the sludges generated, will be removed in the biological treatment system. Whether the residual metal content in the process wastewater will still be high enough to require treatment cannot be determined at this time. Analysis of process wastewaters is needed. Based on the concentrations above, the quantities of the trace elements discharged with 3,785 m^3/day of process related wastewater will be:

Element	Cu	Cr	Mn	Ni	Cd	Pb
Quantity discharged (kg per day)	1.1	1.1	0.04	1.8	0.3	4.4

Besides the trace inorganic elements present in the wastewater as a result of their concentration in the feed coal, minute quantities of inorganic gases formed in the

process would be dissolved in the wastewater discharged after treatment. After stripping and wastewater treatment, concentrations of hydrogen sulfide and ammonia are assumed to be less than 10 ppm and 2 ppm respectively. Thus, for 3,785 m^3/day of wastewater discharged, total hydrogen sulfide and ammonia discharged with the process related wastewater are less than 0.04 and 0.006 metric tons per day, respectively.

Organic compounds (mostly phenols) will be present in the wastewater as dissolved and emulsified components, primarily of the lighter portion of the product oil. Tables 19 and 37 show the constituents of the lighter fractions of the product oils from the Synthoil and H-Coal processes. The only conclusive data on the presence of specific organics in the process wastewater before and after treatment is available for the phenolics. All other organics are usually categorized as oil and grease (86). For this report, treatment by stripping, and biological oxidation and carbon adsorption is assumed. From Reference 65 and calculations in Section 8 (Table 69), residual concentrations of phenolics in the wastewater discharged after treatment will be about 0.1 ppm; that is, 0.04 kg lbs for each 3,785 m^3 of wastewater discharged.

Table 79 gives residual concentrations in the effluent from the wastewater treatment of selected constitutents of the light fraction of the Synthoil product. The assumptions for the columns are that 10, 20, or 40 ppm of light oil passes unchanged through the treatment system. Table 79 indicates that individual nonpolar aromatic compounds in wastewater will generally be present in less than 1 ppm concentration. Also, treatment should make the actual concentrations of these

TABLE 79. CONCENTRATION OF POTENTIAL ORGANIC POLLUTANTS IN THE WASTEWATER EFFLUENT FROM THE SYNTHOIL PROCESS, COMPOUND CONCENTRATION (PPM) (29)

Compound	Total Light Oil 10 ppm*	20 ppm*	40 ppm*
Benzene	0.1	0.2	0.4
n-dodecane	0.03	0.06	0.12
Naphthalene	0.01	0.02	0.04
Toluene	0.15	0.3	0.6
n-propylbenzene	0.01	0.02	0.04
Indan and propyltoluene	0.36	0.72	1.44
Isopropylbenzene	0.2	0.4	0.8

*This amount of oil is assumed to pass unchanged through the treatment system.

compounds much lower. Again, analytical results are required for wastewater samples to pinpoint organic composition and content more accurately.

In addition to light oil organics, it is likely that known polycyclic carcinogens may be present at ppb levels. Table 80 shows the extent of the oxidation of some of these materials. Data are given as a percentage of the amount of compound originally present which was degraded by three different activated sludges after 144 hours. These data suggest that biodegradation is not uniform and cannot be depended upon to reduce the level of any specific compound in the effluent streams. Also, the oxidation of any one compound does not necessarily imply that the carcinogenic activity has been reduced. In some cases, metabolic oxidation of PAH in other systems has been known to increase the carcinogenic potential; in others, it has decreased the potential (87).

A typical biological oxidation system will produce large amounts of cellular material in the form of sludge

TABLE 80. OXIDATION OF VARIOUS CARCINOGENS BY ACTIVATED SLUDGES* (87)

Compound	Ashland City	Nashville	Franklin	Mean
β-Propiolactone	55.9	T	T	18.6
Thiourea	T**	T	5.7	1.9
Ethylcarbamate	T	T	T	0.0
2-Thiouracil	T	12.8	6.2	6.3
4-Ethoxyphenylurea	T	9.4	20.6	10.0
Benzidine	T	T	1.9	0.6
4,4'-Dihydroxy[*a,b*]diethylstilbene	T	T	5.0	1.7
2-Naphthylamine	T	T	T	0.0
4,4'-Bis(dimethylamino)benzophenone	0.6	4.9	4.5	3.3
p-Phenylazophenol	T	T	T	0.0
p-Phenylazoaniline	T	T	T	0.0
9,10-Dimethylanthracene	0.0	19.5	1.6	7.0
1,2-Benzanthracene	0.3	2.1	1.6	1.3
7-Methyl[1,2]benzanthracene	0.4	3.1	T	1.2
9,10-Dimethyl[1,2]benzanthracene	0.5	12.7	0.5	4.6
1,2,5,6-Dibenzanthracene	T	7.9	0.9	2.9
3,4-Benzopyrene	1.7	2.7	6.1	3.5
1,2,4,5-Dibenzpyrene	T	1.8	T	0.6
20-Methylcholanthrene	T	9.3	4.4	4.6
2-Nitrofluorene	T	13.7	12.4	8.7
2-Fluorenamine	T	T	T	0.0
N-2-Fluorenylacetamide	T	6.3	12.3	6.4
7,9-Dimethylbenz[*c*]acridine	T	4.1	T	1.4
7,10-Dimethylbenz[*c*]acridine	T	4.3	1.1	1.8
Dibenz[*a,h*]acridine	0.7	4.6	T	1.8
Dibenz[*a,j*[acridine	T	4.7	T	1.6

* The sludges were allowed to contact the carcinogen for 144 hours and the percentage of theoretical oxygen demand calculated by the following formula:

$$\%TOD = \frac{O_2 \text{ uptake substrate} - O_2 \text{ uptake control}}{TOD} \times 100$$

**Toxic, i.e., O_2 uptake control was greater than O_2 uptake substrate, indicating that the substrate was inhibitory or lethal to the sludge organisms.

which must be disposed of, for example, by incineration (84). This may introduce some pollutants, particularly trace elements, into the atmosphere. Also, the sludge from the biological oxidation unit may create odor problems (84).

Thiophenes appear in smaller quantities than phenols. The efficiency of their removal by wastewater treatment is unknown. The PAH are expected to compose the smallest quantity of the organic load with a wide range of removal efficiencies expected. In general, the removal efficiency is inversely proportional to the molecular weight of the compound; the greater the number of rings the more difficult the removal.

In addition to pollutants in process wastewater, waterborne discharges to the environment could also be present through leaching of disposed residues, ashes, and bottoms. Some indication of the equilibrium concentrations of 14 inorganic elements in aqueous extracts of fly ash (1:1 wt/vol) is presented in Table 81. The equilibrium concentrations of the various elements shown are rather innocuous, except for fluoride's 5 ppm.

TABLE 81. CHEMICAL COMPOSITION OF EQUILIBRIUM AQUEOUS (1:1 WT/VOL) EXTRACTS FROM FLY ASH* (CONCENTRATIONS IN PPM) (88)

Chemical	Concentration	Chemical	Concentration
Ca	632	Mn	0.04
Na	41.25	Cu	0.03
K	8.2	Zn	0.025
Al	11	Mo	0.02
B	3	Hg	0.0005
F	4.7	Cd	0.005
		As	0.0002
		Se	0.002

*Collected in a cyclone precipitator in the stack of the Corette Plant of the Montana Power Co. in Billings, Montana.

Solid Wastes--

Carbonaceous solid wastes emanating from coal liquefaction processes generally require some treatment before disposal. For example, the char and heavy oil residuals may be sent to gasification and converted either to fuel gas or to hydrogen-rich gas. The residual mineral matter can then be sent to the ash pond. In lieu of this, the heavy residuum plus char may be treated (e.g., flaked) and disposed of in a suitable landfill. Excess oil may be recovered from the residuum before disposal of the waste. Whichever approach is used, the heavy residuum plus chars cannot go directly to landfill without prior treatment, since they are considered to contain potentially hazardous organic and inorganic substances.

Other process-related solid wastes include coal dusts and fines (particulates) from cyclone separators, fabric filters, and electrostatic precipitators; mineral debris from coal processing; mineral residues from water processing; spent catalyst and water treatment chemical residues; ash and fly ash; and slags (82). Solid wastes of major importance to coal conversion processes include the ash, filter cake, particulates, and spent catalyst. Waste gypsum sludge (the lime-limestone mixture used in tail gas scrubbing) will be about 2.5 times the normal coal ash disposal tonnage. Possible uses for the ash and sludge combination wastes from tail gas scrubbing are as mineral aggregates or as pozzolana (82).

Ash--Ash from the conversion process may be either dry (as fly ash and particulates), melted (as slag), or softened (self-agglomerates) (89). The daily output of ash from a coal conversion plant producing about 7,950 m^3/day of oil will range between 1,600 and 3,600 metric tons per day. Ash composition will vary, depending upon the origin and rank of the coal

and the operating conditions in the conversion process. Major ash constituents include SiO_2 (46 percent), Al_2O_3 (26 percent) and Fe_2O_3 (18 percent). As shown in Table 82, numerous inorganic elements may appear in coal ash. They include mercury, cadmium, selenium, fluorine, arsenic, copper, lead, and thallium.

Particulate matter (e.g., soot and fly ash) is reported to be environmentally significant as adsorption sites for PAH (82). Leachates of coal ash comprise a significant source of trace metal contaminants. This source was discussed and shown in Tables 77 and 81. Radioactive uranium and thorium are known to occur in fly ash but pose no health hazard. However, recovered fly ash may contain large quantities of alpha-emitting radionuclides which could have adverse health effects if the necessary precautions are not taken during disposal (82).

Mineral matter, such as ash or slag, would be generated in large quantities in all liquefaction facilities. The following chart indicates that the sources and quantities (metric tons per day) may differ substantially.

Stream	Synthoil	H-Coal	Exxon Donor
Process ash (not sent to hydrogen generator)	108.0	393.7	661.3
Ash from hydrogen generation	2,115.6	1,159.4	1,548.6
Ash from utilities	556.1	none (use fuel gas)	not specified

Note: The above numbers are from Section 7 and represent those from conceptualized 7,950 m^3/day commercial plants using carbon-containing residues for hydrogen generation.

TABLE 82. INORGANIC ELEMENTS IN THE ASH FROM LURGI GASIFIER AND THE MINERAL RESIDUE FROM THE H-COAL PROCESS UTILIZING ILLINOIS NO. 6 COAL (89)

Element		Concentration (ppm)	
Name	Symbol	Lurgi	H-Coal
Aluminum	Al	108,121	17,253
Antimony	Sb	4.2	1.2
Arsenic	As	3	1.5
Barium	Ba	950	40
Beryllium	Be	12	1.8
Boron	B	355	300
Bromine	Br	<1.0	6.7
Cadmium	Cd	<1.6	<0.4
Calcium	Ca	16,652	7,862
Cerium	Ce	140	16
Cesium	Cs	11	1.7
Chlorine	Cl	100	1,000
Chromium	Cr	212	27.5
Cobalt	Co	34	4.45
Copper	Cu	57	14
Europium	Eu	1.9	0.69
Fluorine	F	<10	100
Gallium	Ga	2.6	4.6
Germanium	Ge	7.0	4.9
Gold	Au	<0.001	
Hafnium	Hf	6.1	0.86
Iron	Fe	143,780	23,662
Lanthanum	La	47	9.8
Lead	Pb	45	32
Lithium	Li	42	
Lutecium	Lu	1.5	0.024
Magnesium	Mg	3,739	844
Manganese	Mn	1,859	77
Mercury	Hg	0.05	
Molybdenum	Mo	30	6.4
Nickel	Ni	89	21
Phosphorus	P	87	44
Potassium	K	14,611	2,490
Rubidium	Rb	162	16
Samarium	Sm	10	2.3
Scandium	Sc	29	4.1
Selenium	Se	<1	
Silicon	Si	229,946	39,641
Silver	Ag	<0.4	0.16
Sodium	Na	1,929	619
Strontium	Sr	370	30
Sulfur	S		18,000
Tantalum	Ta	1.1	0.17
Tellurium	Te		<0.1
Thallium	Tl	4.6	1.7
Thorium	Th	21	3.5
Tin	Sn		0.6
Titanium	Ti	6,295	1,019
Tungsten	W	1.5	4.4
Uranium	U	17	5.7
Vanadium	V	184	33
Ytterbium	Yb		1.0
Yttrium	Y	2.9	
Zinc	Zn	400	71
Zirconium	Zr	170	41

Ash generation is significantly lower in the H-Coal process because fuel gas is used for utilities, and residue is substituted for coal in hydrogen generation.

From burning of solid fuel, combustion wastes consist of fly ash and slag or bottom ash. In coal-fired power plants and utility boilers, the slag is roughly 30 percent of the total ash and is almost completely recovered from the bottom of the boiler. About 99.5 percent of the remaining fly ash is assumed to be retained by pollution abatement equipment (89).

In general, trace elements tend to partition and concentrate themselves during combustion as follows:

- Class I. Elements that are not volatilized in the combustion zone, but instead form a rather uniform melt that becomes both fly ash and slag. These elements include Al, Ba, Ca, Ce, Co, Eu, Fe, Hf, K, La, Mg, Mn, Rb, Sc, Si, Sm, Sr, Ta, Th, and Ti (89).

- Class II. Elements that are volatilized on combustion, and condense or adsorb on the fly ash as the flue gas cools, leading to depletion from the slag and concentration in the fly ash. These elements include As, Cd, Cu, Ga, Pb, Sb, Se, and Zn (89).

- Class III. Elements that remain almost completely in the gas phase. These elements include Hg, Cl, and Br (89).

Some elements in coal could not definitely be assigned to either Class I or II on the basis of the data obtained in the study (89).

Filter cake--Filter cake is produced in the solids-liquid separation module of some liquefaction processes. Combustion of the filter cake produces a slag that requires disposal to landfill or minefill.

Spent catalysts--Catalysts can be discharged as spent catalyst, lost through abrasion and escape into the ash, or become incorporated into product streams as ultrafine particulate matter (90). Typical catalysts are cobalt-molybdate and nickel-tungsten. A general list is shown in Table 83 (82). The most severe catalyst losses are for dolomite in the CO_2 Acceptor process reported to be two percent of the input (91). Replacement catalyst for an H-Coal process pilot plant was reported to be about 0.05 percent of the charged initial weight (90).

Auxiliary Process Wastes

Airborne Wastes--

The airborne wastes from auxiliary operations include coal preparation discharges, wastes from the hydrogen and oxygen plants, stack gases and particulates from the utility boiler after stack gas cleanup, and moist cooling tower drift (22). As shown in Section 7, Figure 38, dusts generated from the coal receiving, coal storage and coal beneficiation units amount to about 32 metric tons per day. The waste stream from the oxygen generation plant consists largely of inert nitrogen and noble gases. Hydrogen generation facility wastes are discussed in detail in Section 6.

PAH concentrations in fly ash collectors at a coal-fired power plant are shown in Table 84; the PAH are considered to be products of the incomplete combustion of coal. The first seven compounds are of interest in that several are considered

TABLE 83. CONVERSION CATALYSTS (82)

Catalysts	Use
0* Activated carbon	Purification
0 Iron oxide	Purification
* Methanol	Purification
* Propylene carbonate	Purification
+ Sodium carbonate	Purification
+ Potassium carbonate	Purification
* Amines	Purification
Monethanolamine	Purification
Diethanolamine	Purification
Diglycolamine	Purification
0 Zinc oxide	Purification
Cobalt-molybdenum	Shift conversion, liquefaction (hydrotreating), purification
0 Limestone-dolomite	Sulfur recovery
+ Molten salt	
Nickel	Methanation or liquefaction
Vanadium	
0 Dolomite	Purification
Bauxite	Sulfur recovery
Iron	Shift conversion or liquefaction
* Isopropyl ether	Phenol recovery
* *n*-Methyl-2-pyrrolodine	Purification
* Dimethyl ether polyethylene glycol	Purification
K_3AsO_3	Liquefaction
Tungsten	Liquefaction
Zinc chloride	Liquefaction
* Sodium sulfite	Purification
Co-Mo/SiO_2-Al_2O_3	Liquefaction
Sulfoxide	Sulfur recovery
Chelated iron salt	Sulfur recovery
Nickel-tungsten	Liquefaction (hydrotreating)
Ruthenium	Methanation

*Not catalysts as used
+ Enter into chemical reaction
0 Primarily (if not exclusively) adsorbents

TABLE 84. POLYNUCLEAR HYDROCARBON CONCENTRATIONS - UNITS A AND B* (MICROGRAMS PER GJ INPUT) (92)

Compound	Unit A** Test No. 1 Full load b	a	Test No. 2 Full load b	a	Test No. 3 Full load b	a	Unit B Test No. 1 Partial load b	a	Test No. 2 Partial load b	a	Unit B Test No. 3 Full load a
Fluoranthene	341	NA	171	190	NA	180	303	360	1422	72	209
Pyrene	133		123	171		114	171	209	749	64	114
Benzo(a)pyrene	47		21	17		17	54	48	379	114	17
Anthanthrene	15								30		
Benz(a)anthracene						35	44			95	
Benzo(ghi)perylene							18		142	72	
Benzo(e)pyrene							31	36	218	68	
Coronene									4		
Anthracene									91		
Phenanthrene									701	19	
Perylene									58	3	

* A and B refer to operating steam generating units.
**Units A and B produced 453.6 Mg steam at 13.1 MPa and 538°C, coal-fired power plant.

b = before fly-ash collectors a = after fly-ash collectors
NA - No analysis due to loss of sample. A blank indicates that the component was not detected in the sample.

to be carcinogenic. According to Cuffe et al. (92), fly ash collectors can effectively remove 85 to 90 percent of the particulates, and essentially the same efficiency was seen in the removal of common trace and heavy metal compounds such as Ba, Be, Fe, Pb, Cr, Cu, Sn, Sb, Mn, Ni, Mo, V, Ti, Zn and Co.

As discussed in Section 7, the airborne wastes emanating from the steam and power generation units will discharge 345 metric tons per day of sulfur dioxide and traces of NO_2 before treatment. This is based on the use of 3,480 metric tons per day of coal for steam and electricity production, and the assumption that the sulfur content was 5 percent. Evaporation from the cooling tower was estimated at about 21,600 metric tons per day, assuming that the cooling tower makeup was 22,700 metric tons per day (see Section 7).

Waterborne Auxiliary Process Wastes--

Coal pile drainage--Chemical wastes and inorganic elements characteristic of coal pile drainage are shown in Table 85. Amount of drainage depends on area rainfall. Composition of the drainage depends on factors such as coal composition and whether or not the pile is covered.

Hydrogen generation wastewater--The hydrogen generation facilities for a 7,950 m^3/day coal liquefaction plant will have approximately 1,500 m^3/day of wastewater, roughly similar in composition to the liquefaction process wastewater. In actual practice, wastewater streams from the liquefaction process and hydrogen generation will probably be combined and treated.

TABLE 85. CHEMICAL WASTE CHARACTERISTICS OF COAL PILE DRAINAGE (PPM) (68)

Characteristic	n*	Arithmetic mean	Geometric mean	Standard deviation	Standard Error of the mean	Range
Alkalinity	8	20.0	0.0	28.1	9.9	0-36.41
BOD	4	3.3	0.0	4.7	2.4	0-10
COD	5	820	615	434	194	85-1,099
Total solids	6	11,200	5,070	17,000	6,900	1,330-45,000
Total dissolved solids	7	12,600	3,600	17,000	6,500	247-44,050
Total suspended solids	7	830	340	1,140	430	22-3,302
Ammonia	5	0.69	0.00	0.82	0.37	0-1.77
Nitrate	5	1.31	0.93	0.94	0.42	0.3-2.25
Phosphorus	2	0.72	0.53	0.69	0.48	0.23-1.2
Turbidity	5	200	32	270	120	2.77-505
Acidity	5	9,900	216	13,700	6,000	8.68-27,810
Total hardness	4	800	430	840	420	130-1,850
Sulfate	8	6,900	2,200	8,800	3,100	133-21,920
Chloride	4	130	19	240	118	3.6-481
Aluminum	2	1,000	990	260	190	825-1,200
Chromium	6	2.7	0.0	6.4	2.6	0.0-15.7
Copper	4	2.1	2.0	0.9	0.4	1.6-3.4
Iron	9	10,900	4	30,800	10,300	0.06-93,000
Magnesium	2	130	124	60	42	89-174
Zinc	7	5.9	1.0	8.9	3.3	0.006-23
Sodium	3	890	630	630	370	160-1,260
pH	11	4.4	4.0	2.1	0.6	2.8-7.8

*n = number of samples.

Solid Nonprocess Wastes--

Mining waste and coal preparation tailings--Approximately 18,000 metric tons per day of coal will be cleaned of rock, pyritic sulfur, and other wastes. In addition, as much as 50 percent of the mine extract in an underground mine may be waste. While there is little problem with backfilling strip-mining wastes into the mined area, underground backfilling is hazardous and costly.

Ash--The largest quantities of ash are generated in hydrogen generation and in the utilities. The quantities of auxiliary process ash generated were discussed previously in the process solid waste subsection. Once ash has been buried in a landfill or the coal mine, its constituent elements and compounds may leach into groundwater.

Flue gas desulfurization sludge--Removal of sulfur dioxide from flue gases is a support service required for all coal liquefaction processes via their steam and electric power generation facilities and for direct-fired heaters. Removal methods include at least two processes which result in a waste sludge by-product. The sludge, composed mainly of calcium sulfite, calcium sulfate, and water, is dewatered to about 50 percent solids, and then is transferred to settling ponds. Often a portion of the fly ash will be mixed with limestone scrubber sludge in order to make the mixture easier to handle (93).

As can be seen in Table 86, the solids content varies with scrubber type. Table 87 shows the sludge composition following the treatment designated in Table 88. Ponds A and D represent untreated sludge samples. Treatment with the Dravo, IUCS, and Chemfix processes represent chemical fixation methods. Differences in the sludges are more likely to manifest themselves in leachate compositions (93).

TABLE 86. SHAWNEE POND DATA (93)

Pond designation	Scrubber type	Sludge absorbent/source	Solids content, wt%	Treatment contractor
A	Venturi/spray tower	Lime/filter cake	46	Untreated
B	Turbulent contact absorber	Limestone/clarifier underflow	38	Dravo
C	Venturi/spray tower	Lime/centrifuge cake	55	IU conversion systems
D	Turbulent contact absorber	Limestone/clarifier underflow	38	Untreated
E	Turbulent contact absorber	Limestone/clarifier underflow	38	Chemfix

TABLE 87. SHAWNEE DISPOSAL DEMONSTRATION INPUT SLUDGE ANALYSIS RECORD (93)

	Pond "A"*		
Sample date	9-23-74	Not given	10-5-74
Liquor analysis:**			
pH	8.80	8.35	7.95
Total akalinity		61	
Chloride	3,604	4,600	4,833
Conductivity	10.0	12	12.4
Dissolved solids	7,110	8,560	9,460
Sulfate	974	1,525	1,488
Arsenic		0.024	
Boron		44.0	
Calcium	1,980	2,100	2,675
Lead		0.49	
Magnesium	313	290	212
Mercury		<0.0001	
Selenium		0.005	
Sulfite	64	4.3	32
Sodium	56		79
Solids analysis:***			
Total solids	15.7		24.3
Calcium sulfite	46.5		38.6
Calcium sulfate	11.8		14.1
Calcium carbonate	3.4		3.9
Fly ash	42.5		46.9

(continued)

TABLE 87. (continued)

	Pond "D"*				
Sample date	10-3-74	10-21-74	1-15-75	Not given	2-5-75
Liquor analysis: (mg/l)					
pH	9.05	8.80	7.80	8.21	7.15
Chloride	2,694	2,765	1,560	1,450	1,843
Conductivity	4.9	5.2	3.05	5.7	5.35
Dissolved solids	6,400	6,845	3,010	5,852	3,700
Sulfate	1,491	1.700	2,253	2,500	2,484
Arsenic				.24	
Boron				90	
Calcium	1,780	1,920	917	1,100	1,330
Lead				.26	
Magnesium	253	262	395	255	332
Mercury				<0.0001	
Selenium				0.040	
Sulfite	48	72	24	16	24
Sodium	56	58	41		42
Solids analysis: (wt.%)					
Total solids	36.5	37.2	33.3		
Calcium sulfite	30.4	33.1	30.9		
Calcium sulfate	14.5	17.7	16.6		
Calcium carbonate	31.8	19.7	16.9		
Fly ash	37.9	34.7	38.3		

	Pond "E"*	Pond "C"*		Pond "B"*
Sample date	Not given	4-6-75	4-23-75	4-13 and 4-15-75
Liquor analysis:				
pH	9.43	8.35	7.75	7.08
Chloride	2,450	2,871	5,566	2,375
Conductivity		6.4	10.0	5.43
Dissolved solids	5,960	6,980	11,010	6,140
Sulfate	1,175	1,672	1,578	1,368
Calcium		1,995	3,275	1,368
Magnesium		165	309	387
Sulfite		72	88	120
Solids analysis:				
Total solids		25.1	22.2	40.6
Calcium sulfite		40.8	38.5	31.8
Calcium sulfate		12.5	15.4	18.6
Calcium carbonate		3.6	3.8	20.9
Fly ash		46.1	46.5	34.8

* See Table 86
** All liquor concentrations in ppm
***All solids analyses in weight percent

TABLE 88. COMPARISONS OF PRODUCTS AND PROCESS PARAMETERS OF COAL LIQUEFACTION PLANTS AND SIMILAR INDUSTRIES (EXTRACTED FROM SECTIONS 2 THROUGH 9)

	Synthoil	H-Coal	Exxon Donor	Data from other liquefaction processes	Petroleum refining	By-Product coking	Gasification
Process temperature	460°C	454°C	450°C	450°C	50°C*	1500°C	1850°C
Reactor pressure	27.6 MPa	20.7 MPa		12.4 MPa	345 kPa	103 kPa	103 kPa
Ash % in feed	16.5	9.3	9.6			8.0	
Ash % in product oil	0.1		0.0				
Nitrogen % in feed	1.2	1.0	1.84		0.1	1.5	1.4
Nitrogen % in oil			Naptha Oil 0.06 0.24				
Sulfur % in feed	5.5	4.5	4.2		0.5	1.0	3.5
Sulfur % in gas		0.1			0.01		
Sulfur % in light oil	0.2	0.1	0.005		0.1	0.1	
Sulfur % in heavy oil	0.4	0.5	0.04		1.0		
Sulfur % char, tar or residuum	8.7	7.2			2.5		2.7
Benzo(d)pyrene % in oil	0.004			0.005	0.003	0.2-2.0	
Product distribution				Table 5	Table 5	Figure 53	
Metric tons/day based on 7,950 m^3 barrels							
Gas	662	2050	590				
Light oil	1542	Naphthas 1542	Naphthas 2966				
Liquid by-product	1134	Middle distilate 390	Middle distilate 4935				
Heavy oil	6250	6187	53				
Char, tar or residuum	(extra)390	5688	4309				
Table Nos.	16	30	43	5**	5,91**	Figure 53,90	
Composition tables							
General composition	93	89,92					
Crude oil analysis							
Fuel gas analysis		32					
Light oil analysis	19	89	Naphthas 50				
Heavy oil analysis	22,24,93	89	Oil 50				
Residue analysis	25-27,93						
Carcinogenic compounds				98,123			
PAH analysis	26,94			96			
Trace elements				99			
Sulfur analysis	22	39		91,92			

*Atmospheric distillation 30-60°C (138-414 kPa)
Thermal cracking conditions 480-603°C (4.1-6.9 MPa)
Hydrotreating 314-427°C (0.7-20.7 MPa)

**Data not based on 7,950 m^3/day production.
No entries mean data was either not available, not applicable, or not included in reference reports.

On the basis of sulfate sludge generated in support of gasification facilities, a reasonable estimate has been made of the quantities of sludge to be formed in support of liquefaction facilities. A BI-GAS gasification plant utilizing 0.6×10^6 kg/hr of steam and 42 MW of electricity will cause the generation of 484 metric tons per day of spent limestone sludge through the operation of its utility power plant (93). Considering the utility requirements for the coal liquefaction processes under study, this figure may represent the average quantity of sludge generated for all the processes.

Bio-Pond sludge--Twenty-seven metric tons per day of bio-pond sludge is expected to be generated. This amount is nominal, compared to the total volume of solids waste generated by a conversion plant. However, the bio-pond will treat phenols, ammonia, cyanides, COD, thiocyanates, and other environmentally significant wastes, so proper disposal of the sludge is imperative. When the sludge has formed and has been removed from the pond, it will contain coal tars, sand, coal fines, and bio-treatment by-products. Prior to disposal, it will probably be de-oiled and either air-dried or centrifuged.

Water treatment sludge--The water clarification unit may treat water containing chemicals from some of the cyclic processes within the plant. The sludge produced will contain some of these chemicals, as well as lime and settled suspended solids.

Products and By-Products Composition

In evaluating the potential environmental impact of coal liquefaction processes, it is important to consider not only the wastes but the product as well. Product streams

are important because their components can be potential environmental pollutants. Components of the products (gases, tars, and oils) may appear in the waste streams from incomplete product or by-product recovery. Hydrocarbons may be emitted to the atmosphere via incomplete combustion; through leaks in hydrocarbon storage vessels; from aqueous effluents of cooling streams; during slurry mixing; or by emissions of flue gases from coal, char, and oil combustion.

The various liquefaction processes generally produce products consisting of a gas, light and heavy oils, tars, and char. The proportion and composition of these products are affected by variations in the conversion operating conditions such as temperature and pressure, hydrogen input, and catalyst, as well as by the constituents in the coal feed. The interaction and impact of all such variables on the product character is beyond the scope of this work; however, the effect of varying any one particular parameter may be discussed generally. Comparison of liquefaction process conditions to those utilized by other industries, such as coking, can also be examined in terms of the resulting product and its potential hazard to man and the environment. A summary of comparisons among processes and products of various fuel conversion and fuel processing industries is given in Table 88.

Table 88 is a summary of data contained in Sections 2 to 8 of this report. The sources of these data are given (via table numbers) where the data originally appeared. The proportion of products distilling off at various fractionation temperatures varies with the conditions mentioned above. The product distribution among gas, light oil, heavy oil, tars, and chars of the processes under examination is

given in Table 88. Generalizing from the data gives the product distributions roughly as: gas, 2 to 10 percent; light oil, 10 to 25 percent; middle oil, 5 to 50 percent; and heavy oil, 1 to 45 percent. Such wide variation in product fractions from the different processes illustrates the versatility of coal liquefaction technology and the complexity of assessing its potential environmental impact.

In addition to variation in the amounts of product fractions, there are variations in the composition of products. The lower boiling fractions consist of products suitable for gasolines, while the higher boiling fractions can be utilized as fuel oils. Analyses of product types from the liquefaction processes are also summarized in Table 88.

One conversion condition that significantly influences the distribution and composition of products is the process temperature. The temperature-composition relationship is illustrated by comparison of high-temperature tars (such as those produced in by-product coking) and the low-temperature tars (produced by process temperatures of less than 500°C). The process temperature affects the proportion of various types of products (gas, light oil, tars, and coke). This is illustrated in Figure 67 (94). The chemical composition of such products also changes with temperature. The tars produced at low temperatures vary widely in composition with the nature of the coal and the specific carbonization equipment that is, the temperature program, residence time, and maximum temperature (95). Such variables compound the problem of quantitatively characterizing liquid fuels from coal liquefaction. The one outstanding chemical characteristic that can be cited for low-temperature tars is the small amount of any individual compound, a situation common

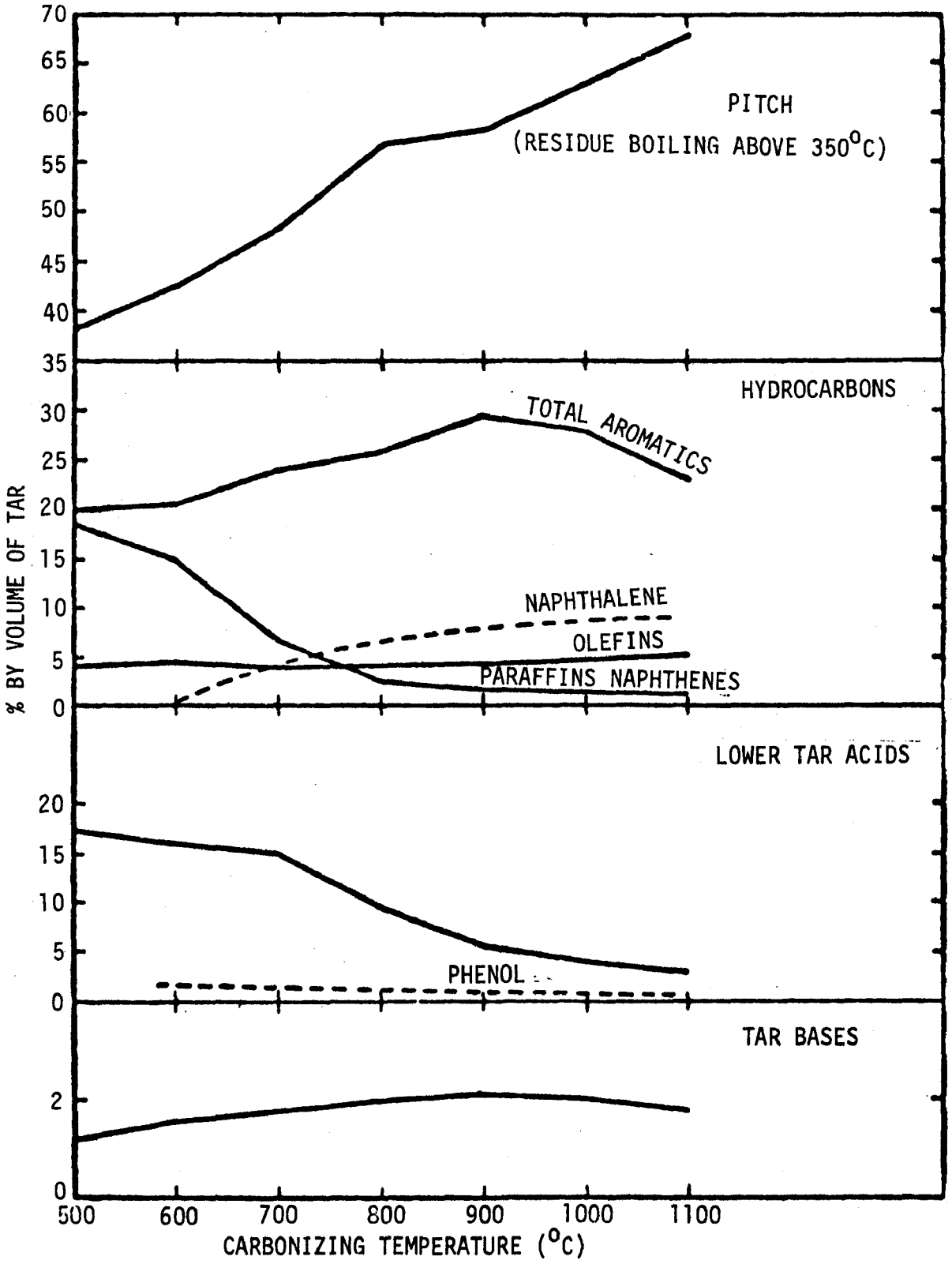

Figure 67. Effect of carbonizing temperature on composition of tar (laboratory retort; medium caking coal: ~86 percent carbon) (94)

to petroleum and shale oil, but completely different from coke-oven tars in which a single compound like naphthalene can account for as much as 10 percent of the tar. With low-temperature tars it is rare for any one compound to constitute as much as one percent of the tar (96). Analysis of the constituents found in various fractions of liquefaction products have been presented in Tables 16, 19, 21, 22, 26, 38, and 42. By comparing coal liquefaction products with crude petroleum and coal tar, the potential hazard of liquefaction oils can be assessed relative to that of the other liquid fuels. Semiquantitative analysis of fuel products from the H-Coal process is shown in Table 89 (97).

Varying the pressure of the reactor also influences the nature of the products. The effect of increasing or decreasing the reactor pressure was demonstrated with the Synthoil process by comparing the product variation when the conversion pressure was run at 14.2 MPa versus the results obtained with 28.4 MPa. The product variation for the two reactor pressures indicated that the higher pressure caused an increase in yield and in heating value. The higher pressure was also accompanied by an increase in hydrogen consumption. The product from the higher pressure operation had a lower sulfur content than the product from the lower pressure operation. Ash yield was higher with the lower pressure operations (24). The effect of changing the operating conditions by increasing reactor space velocity in the H-Coal process greatly reduces consumption of hydrogen per ton of coal processed. This results in a fuel oil product instead of a synthetic crude. The various fractions resulting from the two modes of operation were given in Table 5.

The rank and origin of the coal feed influence the product yield, distribution, and composition. Table 89

TABLE 89. INSPECTION OF PRODUCTS FROM ILLINOIS NO. 6 AND WYOMING SUBBITUMINOUS COALS (97)

Compound	Component	Weight percent		Total weight percent	
	C_4 - 204°C fraction	A	B	A	B
Saturated compounds	nC_4	0.10	0.20		
	iC_5	0.20	0.20		
	nC_5	0.69	0.88		
	C_6 - C_{12}	11	13.42		
				11.99	14.70
Alkyl benzenes	C_6 - C_{12}	17.55	14.16		
				17.55	42.91
Saturated naphthenes	Monocycloparaffins	42.64	36.82		
	Dicycloparaffins	8.50	6.09		
	Tricycloparaffins	0.19			
				51.33	16.66
Unsaturated naphthenes	Monocycloparaffins	5.32	7.71		
	Dicycloparaffins	4.98	7.28		
	Tricycloparaffins	0.90	1.67		
				11.20	14.16
Other compounds	Indans	6.44	5.11		
	Naphthalenes	0.59	0.79		
	Phenols (mol. wt) - 108, 122, 136, 150	1.0	1.71	7.93	7.61
Olefins, diolefins, etc.	C_6		0.02		4.24
	C_8 - C_{11}		4.22	100.00	100.3
	204-343°C fraction				
Saturated compounds	n-paraffins	4.8	8.8		
	i-paraffins	1.7	2.1		
	Monocycloparaffins	14.0	7.5		
	Dicycloparaffins	7.9	2.7		
	Tricycloparaffins	2.6	1.1		
				31.0	22.2
Unsaturated nonaromatic	Monocycloparaffins	4.3	4.5		
				4.3	4.5
Aromatic compounds	Alkyl benzenes	12.6	6.7		
	Indans & tetralins	30.8	23.2		
	Indenes	5.7	8.7		
	Naphthalenes	0.2			
	Naphthalenes	3.5	12.3		
	Acenaphthenes (C_nH_{2n-14})	4.0	12.7		
	Acenaphthenes (C_nH_{2n-16})	2.2	1.7		
	Tricyclics (C_nH_{2n-18})	0.4	0.5		
				59.6	65.8
Other compounds	Phenols (mol. wt) - 108, 122, 136, 150, 164, 178	2.0	2.8		
	Other nonhydrocarbons	3.10	4.7		
				5.10	7.5
				100.00	100.0

(continued)

TABLE 89. (continued)

Compound	Component	Weight percent		Total weight percent	
	343-493°C fraction	A	B	A	B
Saturated compounds	Paraffins	1.4	7.2		
	Monocycloparaffins	3.1	1.4		
	Bicycloparaffins	0.6	0.4		
	Tricycloparaffins	0.7	0.6		
	Tetracycloparaffins	0.4	0.5		
	Pentacycloparaffins	0.2	0.3		
	Hexacycloparaffins	0.1	0.3		
	Phenyls	0.3			
				6.8	11.1
Unsaturated nonaromatic	Paraffins	0.0	0.6		
	Monocycloparaffins	0.5	0.7		
	Bicycloparaffins	0.3	0.1		
	Tricycloparaffins	0.2			
	Tetracycloparaffins	0.2			
	Pentacycloparaffins	0.1			
	Hexacycloparaffins	0.1	0.1		
	Phenyls	0.2			
				1.6	1.5
Other compounds	Alkyl benzenes	3.0	0.2		
	Indans and/or tetralins	0.5			
	Other aromatics[a]	72.8	74.0		
	Phenolic compounds	1.5	0.6		
	Other nonhydrocarbons	13.8	12.6		
				91.6	87.4
				100.00	100.0

A Illinois No. 6 coal

B Wyoming subbituminous coal

[a]An approximate breakdown of aromatic-type compounds is:

Component type	A Millimoles per 100 g	B Millimoles per 100 g
Naphthalenes	93.4	91.7
Phenanthrenes	91.1	116.7
Chrysenes	21.9	26.1
1-2 Benzanthracenes	14.6	15.2
3-4 Benzphenanthrenes	15.4	19.2
Pyrenes	5.1	5.1
5-Ring compounds		

illustrates the product variation as a result of using Illinois No. 6 and Wyoming subbituminous coal (97).

A major concern with regard to the effect of process temperatures on product composition is that higher temperatures tend to produce greater quantities of compounds known or suspected to be carcinogenic. Such information is significant in assessing the potential hazard of coal liquefaction products in comparison to other fuels and chemical source materials such as petroleum crude and coal tars. It has been observed that coal tars produced at higher temperatures are far more carcinogenic than those produced at lower temperatures. Studies have shown that carcinogenic agents were formed in very small amounts below 450°C, increased rapidly between 450 and 560°C, and continued to increase at a lower rate over the range 560 to 1250°C (94,98). This increase in carcinogenicity is generally considered to be a result of the increase in PAH with the increase in temperature. An illustration of the increase in aromatic (and potentially in the PAH compounds) with higher process temperatures is shown in Table 90; the composition of condensable compounds from coal gas is compared when the source is a high-temperature coke oven versus a low-temperature retort. The oil from low-temperature carbonization resembles that of crude petroleum in being highly paraffinic whereas that derived from coke oven gas is predominantly aromatic. Epidemiology studies reveal a greater incidence of cancer among coke plant workers than for the general population of the same area. No increased cancer incidence was found among petroleum refinery workers.

As an example of an industrial chemical concentration, benzo(a)pyrene (BaP), a well-studied carcinogen in coal tar, has been found in coal liquefaction products at much lower concentration than has been noted for coal tar. Analyses of

TABLE 90. COMPOSITION OF CONDENSABLE COMPOUNDS FROM COAL GAS* (99)

	Coke** oven	Low-temperature retort***
Mono-olefins	1.64	16.26
Dienes	2.48	1.36
Cyclo-olefins	5.37	9.55
Paraffins	0.34	46.53
Naphthenes	0.21	8.00
Aromatics	85.26	15.56
Indene	1.13	0.15
Carbon disulfide	0.40	0.06
Thiophenes	0.67	0.66
Other compounds	2.50	1.87

* Percent by volume

** Coke ovens generally operate at temperatures around 1500°C

***Less than 500 or 600°C

various oils have determined BaP levels for coal tar; coal liquefaction oil, and petroleum of 0.2 to 2.0 percent, 0.005 percent, and 0.003 percent, respectively (100,101). The carcinogenic significance of the similar BaP levels for petroleum crude and coal liquefaction oil versus the much higher level in coal tar has not been demonstrated in laboratory animal studies. That is, the carcinogenic potential of the product oil or coal tar as a whole has not been shown to be directly correlated with the level of any one individual

carcinogen. Such studies are underway and are expected to elucidate this area. Whether the relatively low process temperatures of coal liquefaction actually produce fewer specific carcinogens in the fuel product than are formed at higher temperatures in similar products from the coking industry has not been determined.

Data on the chemical compositions of petroleum- and coal-derived products are given in Tables 91 through 96. Table 91 gives the chemical analyses of four petroleum crudes by the categories of aromatic, naphthalene, and paraffin, with similar data for H-Coal products given in Table 92. The analytical data illustrate the relatively low aromatic content of crude oils in comparison to that found in the liquefaction product oils, as well as the general tendency to have larger percentages of aromatic compounds in the higher boiling fractions. Table 93 gives the comparison between the compound structural types found in heavy oil and asphaltene fractions of Synthoil product, and illustrates the general pattern of the higher boiling fractions having a greater percentage of PAH. Tables 94, 95, and 96 give estimates of PAH concentrations in various coal-derived materials. These PAH levels in liquefaction product oil can be compared to the levels found in particulate matter emitted by incineration and open burning. Generally, the levels of the PAH compounds determined for Synthoil product were in the range of those found for the emitted particulates from some commercial incinerators as shown in Table 97.

TABLE 91. CHEMICAL ANALYSES OF PETROLEUM* (6)

	1. Grozny ("high paraffin"), 45.3 per cent at 411°C			2. Grozny ("paraffin-free upper level"), 40.9 percent at 411°C			3. Oklahoma (Davenport), 64 percent at 411°C			4. California (Huntington Beach), 34.2 percent at 411°C		
Fraction °C	Aromatic	Naphthene	Paraffin	Aromatic	Naphthene	Paraffin	Aromatic	Naphthene	Paraffin	Aromatic	Naphthene	Paraffin
60-95	3	25	72	4	31	65	5	21	73	4	31	65
95-122	5	30	65	8	40	52	7	28	65	6	48	46
122-150	9	35	56	13	52	35	12	33	55	11	64	25
150-200	14	29	57	21	55	24	16	29	55	17	61	22
200-250	18	23	59	26	63	11	17	31	52	25	45	30
250-300	17	22	61	35	57	8	17	32	51	29	40	31

*All values given in weight percent

TABLE 92. H-COAL PRODUCT COMPOSITION (97)

Component	204-343°C fraction (weight percent)	343-492°C fraction (weight percent)
Saturated nonaromatics	31.0	6.8
Unsaturated nonaromatics	4.3	1.6
Aromatics	59.4	76.3
Phenols	2.0	1.5
Nonhydrocarbon	3.3	13.8

TABLE 93. MAJOR STRUCTURAL TYPES IN HEAVY OIL AND ASPHALTENE FRACTIONS FROM SYNTHOIL PRODUCT* (102)

Structural types**	Total heavy oil	Total asphaltene
Alkylbenzenes	11	9
Indenes	7	4
Indans	9	2
Naphthalenes	6	2
Acenaphthylenes	12	8
Biphenyls	21	11
Anthracenes; phenanthrenes	6	4
Phenylnaphthalenes	5	6
4 rings, pericondensed	5	11
4 rings, catacondensed	3	9
5 rings, pericondensed	4	15
5 rings, catacondensed	1	5
6 rings, pericondensed	1	10
Phenols	9	4

* by percent
**Includes alkyl derivatives

TABLE 94. PAH COMPOUNDS IN SYNTHOIL SAMPLES (103)

Compound	Concentration (ppm)
Phenanthrene	413
Benzo(a)anthracene	18
Benzo(a)pyrene	41

TABLE 95. PAH IN COED SAMPLES (103)

Sample type	Concentration (ppm) Benzo(a)pyrene	Concentration (ppm) Benzo(a)anthracene
Product separator liquor	8.0	
Drier liquor	9.3	
Syncrude	51	Trace
Unfiltered raw oil	107	42
Filtered raw oil	96	52

TABLE 96. ESTIMATION OF PAH CONCENTRATIONS IN COAL-DERIVED MATERIALS (104)

Component	Coal-Derived Material** A	B	C	D
	(ppm)			
Naphthalene	347	486	341	247
2-Methylnaphthalene	1325	1508	1070	1102
1-Methylnaphthalene	383	531	438	330
Azulene	ND*	30	7	28
Biphenyl	89	271	113	213
2, 6-Dimethylnaphthalene	328	338	220	224
1, 3-Dimethylnaphthalene	181	428	338	284
1, 5- and/or 2, 3-dimethylnaphthalene	202	254	165	169
Acenaphthalene	20	50	36	21
Acenaphthene	61	112	53	IR*
Fluorence	205	540	244	IR
9-Methylfluorence and/or octahydroanthracene	94	84	46	IR
9, 10-Dihydrophenathrene	IR	IR	36	IR
1-Methylfluorence	152	IR	IR	IR
Phenanthrene and/or 1,3,6-Trimethylnaphthalene	IR	IR	213	IR
2-Methylanthracene	245	131	21	68
1-Methylphenanthrene	107	16	IR	30
2-Phenylnaphthalene	IR	IR	22	IR
9-Methylanthracene	42	14	ND	15
1, 2-Dihydropyrene	ND	IR	37	IR
Fluoranthene	ND	IR	19	IR
Pyrene	IR	IR	73	IR
1, 2-Benzofluorene	ND	IR	29	IR
4-Methylpyrene	IR	IR	33	IR
1-Methylpyrene	IR	65	IR	IR
1, 2-Benzanthracene	21	IR	18	IR
Chrysene and/or triphenylene	35	40	12	61
Triphenylbenzene	47	56	ND	25

*ND - not detected; IR - incomplete resolution.

**Reference 104 identifies A and B as two "Coal-derived products" and C and D as two "different preproduct samples" from the process for making B.

TABLE 97. POLYNUCLEAR HYDROCARBON CONTENT OF PARTICULATE MATTER EMITTED BY INCINERATION AND OPEN-BURNING SOURCES* (105)

Source Number	Type of Unit	Sampling point	Group 1							Group 2			
			BaP	Pyrene	BeP	Perylene	BghiP	Anthanthrene	Coronene	Anthracene	Phenanthrene	Fluoranthene	BaA
			(mg/gram of particulate)										
	Municipal Incinerators												
20	226.8 metric ton/day Multiple chamber	Breeching (before settling chamber)	0.016	1.9	0.08				0.06			2.2	0.09
											9.8	2.5	
21	45.4 metric ton/day Multiple chamber	Breeching (before scrubber)	3.3	28	6.5		19		8.2				
		Stack (after scrubber)	0.15	3.6	0.97		1.1		1.1			5.5	0.26
	Commerical incinerators			-									
22	4.8 metric ton/day Single chamber	stack	58	350	49	3.3	98	7.1	23	51	150	240	5.0
23	2.7 metric ton/day Multiple chamber	stack	180	2600	180	36	540	45	130	53	62	2400	210
	Open-Burning												
24	Municipal refuse	In smoke plume	11	29	4.5					4.7		13	
25	Automobile tires		1100	1300	450	72	660	53	81	110	450	470	560
26	Grass clippings, leaves, branches		35	120	21		5.4			4.7		110	25
27	Automobile bodies		270	670	210	33	150	12	15	220	160	450	40

*A blank in the table for a particular compound indicates that it was not detected in the sample.

Other carcinogenic compound types which have been identified in coal liquefaction products are methyl chrysenes. Table 98 gives quantitative values found in product sample.

TABLE 98. QUANTITATIVE DATA FOR METHYL CHRYSENES IN A COAL LIQUEFACTION PRODUCT (106)

Compound	Concentration (ppm)
Chrysene	98
1-Methyl chrysene	--
2-Methyl chrysene	102
3-Methyl chrysene	106
4-Methyl chrysene	
5-Methyl chrysene	(19)*
6-Methyl chrysene	64
Total methyl chrysenes	272

*Estimation of maximum possible concentration of 4-plus 5-methyl chrysene.

The fate of trace metals during liquefaction is also of interest and concern. Table 99 illustrates the level of some key inorganic compounds in various coal feeds and their redistribution to residue and oil products from the liquefaction process. The major portion of the inorganics remains in the ash and residue, with generally less than one

TABLE 99. TRACE ELEMENT COMPOSITION IN VARIOUS FEED COALS AND RESULTANT DISTRIBUTION AFTER A LABORATORY LIQUEFACTION PROCESS IN AN AUTOCLAVE* (69)

	B	Co	V	Ni	Ti	Mo	Na	Pb	Zn	Mn	Cr	Cu	Cd	Be
1. Feed coal	12	25	12	12	75	tr.	5000	n.d.	25	12	25	12	0.2	0.4
Solid resuidue	25	12	25	5	150	25	1000	n.d.	50	25	25	25	0.5	0.8
Oil	0.15	0.12	0.06	0.15	5	0.08	5	0.02	0.12	0.05	0.05	0.02	--	0.0004
2. Feed coal	25	12	50	25	400	12	2500	n.d.	125	125	25	25	4	0.8
Solid residue	150	40	150	80	1100	40	8000	n.d.	---	300	80	90	4	2
Oil	0.12	0.01	0.25	0.08	6	0.01	2.5	n.d.	0.12	0.12	0.02	0.03	--	0.01
3. Feed coal	7	4	4	4	450	4	150	n.d.	n.d.	4	1.5	7	1.4	0.2
Solid residue	40	20	40	20	240	20	800	n.d.	100	80	20	40	2.7	2
Oil	0.03	0.004	0.004	0.03	0.5	n.d.	0.9	n.d.	0.05	0.05	0.05	0.01	--	0.0009

B Seam, King Mine, Utah, PSOC-239

1. Mineral matter, dry basis, 12.9%. High Vol. B. Total S, 0.52 (S_{pyr} 0.13) Ash content of oil, 150 ppm.

Lower Dekoven Seam, Will Scarlett Mine, Illinois, PSOC-284

2. Mineral Matter, 25%. High Vol. A. Total S, 5.2% (S_{pyr} 4.0) Ash content of oil, 250 ppm.

Mining City Seam, Jerry Mine, Kentucky, PSOC-221

3. Mineral Matter, 7.3%. High Vol. A. Total S, 3.9% (S_{pyr} 0.13) Ash content of oil, 90 ppm.

*Compositions in ppm

part per million of any element distributed in the product oil (69).

A primary concern with liquefaction of coal is reduction of the sulfur content of the fuel. Sulfur contamination in fuels is a significant environmental concern and has made the burning of coal unacceptable in many cases. Bituminous coals vary widely in sulfur content, ranging from roughly 1 to 5 percent by weight. The high sulfur coals expected to be utilized in coal liquefaction average about 4.5 percent sulfur. The sulfur content of crude petroleum is generally lower than that of coal, with an average level of 0.75 percent, varying from 0.20 to 3.70 percent. During the liquefaction process there is a redistribution of the sulfur, resulting in sulfur levels in the product oil of about 0.5 percent, with lesser percentages in the gases and light oils and progressively greater percentages in the heavier oils and tars. The estimated sulfur levels in various liquefaction solids and liquid streams from several coal conversion processes are detailed in Table 100. Sulfur redistribution during refining of petroleum crude is shown in Table 101.

TABLE 100. ESTIMATE OF SULFUR LEVELS* IN COMBINED LIQUID AND SOLIDS PRODUCTS FROM LIQUEFACTION PROCESSES (107)

Process	Original coal**	Liquid product	Solids	Combined product
Solvent refined coal	3.5-4.3	1.0	4.6-7.0	1.7-2.3
H-Coal	5.0	0.20	7.2	1.7
Consol	4.2	0.30	5.2	2.6
Bureau of Mines Hydrodesulfurization	3.0	0.31	2.1	0.8

* Percent by weight
**For bituminous coals

TABLE 101. DISTRIBUTION OF SULFUR IN PETROLEUM FRACTIONS (108)

Fuel gas	1.4
Claus off-gas	1.5
FCC regeneration	7.3
LPG	0
Gasoline	3.2
Kerosine & jet fuel	2.0
Diesel	9.2
No. 2 fuel oil	9.2
No. 6 fuel oil	23.3
Asphalt (finished)	13.9
Coke (equivalent)	8.0
Sulfur	27.7

Sulfur is in the product oils as various compounds. Table 102 illustrates the organic sulfur compounds in the products of coal hydrogenation and specifies the quantities of sulfur compounds found in various fractions of Synthoil oil.

TABLE 102. ORGANIC SULFUR COMPOUNDS IN SYNTHOIL PRODUCT (102,103)

m/e*	Molecular formula	Identification**
Light oil		
134	C_8H_6S	Benzothiophene
148	C_9H_8S	Methylbenzothiophene
162	$C_{10}H_{10}S$	Dimethylbenzothiophene
Heavy oil		
98	C_5H_6S	Methylthiophene
138	$C_8H_{10}S$	Tetrahydrobenzothiophene
174	$C_{11}H_{10}S$	Benzylthiophene
184	$C_{12}H_8S$	Dibenzothiophene
198	$C_{13}H_{10}S$	Methyldibenzothiophene
208	$C_{14}H_8S$	Benzo(def)dibenzothiophene
234	$C_{16}H_{10}S$	Naphthobenzothiophene
248	$C_{17}H_{12}S$	Methylnaphthobenzothiophene
284	$C_{20}H_{12}S$	Dinaphthothiophene

Sample or subfraction	Number of sulfur compounds observed in GLC profile
Synthoil oil	>40
Neutral PAH fraction	>20
3-membered rings PAH subfraction	>20
4-membered rings PAH subfraction	none
5-membered rings PAH subfraction	none

* This is a term used in mass spectrometry. It means mass per unit change.
**Based upon molecular formula determined by high-resolution mass spectrometry. Other isomeric forms are possible in some instances.

In summary, the products of coal liquefaction should be considered potentially hazardous, particularly the higher boiling fraction and residuum. The hazard of liquefaction products relative to that of crude petroleum and coal tar has not been established. However, it is believed that liquefaction oils will be less carcinogenic than coal tars, but more hazardous than petroleum crude. With regard to sulfur levels, liquefaction oils are within the range of that of refined petroleum products. Nitrogen levels in coal liquefaction oils are much higher than in petroleum products.

FACTORS INFLUENCING ENVIRONMENTAL DISTRIBUTION

Airborne Wastes

Physical-Chemical Characteristics--

Volatilization is the most important process for introducing small molecules into the atmosphere. Some of the emissions such as hydrogen sulfide and ammonia are gases at process temperatures. Others such as trace elements can be volatilized by the reducing conditions coupled with the high temperature and pressure which are characteristic of various coal liquefaction processes. Trace elements such as mercury can occur as a vapor in their elemental forms; others can be converted to volatile compounds such as hydrides of arsenic, antimony, selenium, chlorine and fluorine; or volatile carbonyls (iron, nickel, and cobalt) (84). Table 103 lists the boiling points under normal atmospheric pressure for selected trace metals either in their elemental state or in combinations. Depending upon such factors as the reactor configuration and bed type, type of coal utilized and pre-treatment procedures, type of coal feed system, and process operating conditions, the trace elements will leave the liquefaction unit either with the product, as part of the solids residue streams, or as a component of the gas stream.

TABLE 103. BOILING POINTS OF SELECTED ELEMENTS ASSOCIATED WITH COAL - °C (109)

Element	Elemental form	Hydride	Sulfide	Oxide
Aluminum	2057		1500 (subl.)	2980
Antimony	1380	-17.1 (gas)	1150	1550
Arsenic	615 (subl.)	-116.3 (gas)	565-707	457
Beryllium	2970			3900
Boron	2550	-92.5 (gas)		1860
Cadmium	767		980	900-1000
Chromium	2480			4000
Copper	2595			1800
Cesium	670		800	
Lead	1515			
Lithium	1317			1200 (at 80 kPa)
Mercury	357			
Nickel	2730			d.[a]600
Selenium	685	-41.5 (gas)		
Silver	1950			d.[a]300
Thallium	1457			1800
Vanadium	3000			
Zinc	907		1185 (subl.)	

[a]decomposes
NOTE: At atmospheric pressure unless noted otherwise.

Trace elements that occur in coal as aluminosilicates have very high vaporization temperatures and generally remain with the fly ash and slag. The current paucity of information makes it difficult to compute a mass balance for trace metals between the coal and gaseous, liquid, and solids process discharges.

If steam for the coal liquefaction process is generated in a coal-fired boiler, then trace elements may be volatilized either in the elemental state or as metal oxides. The appropriate boiling points are listed in Table 103. Elements such as arsenic, bromine, chlorine, cadmium, cesium, mercury, selenium, and zinc may be volatilized. Small quantities of these elements may escape the scrubber in the stacks. Other

possible sources of trace element contamination associated with coal liquefaction plants include chromates present in cooling tower blowdown, volatile fluorides in sour water, and chemical purges from acid gas removal which may contain arsenic and vanadium (84).

Organic compounds vary greatly in their volatility depending on their molecular weight and structure. Some are volatile and may be expected to become air emissions whenever present in waste streams; others, for reasons of polarity and/or high molecular weight, will not. Examples of some organic compounds found in coal liquefaction processes are given below.

Benzene--Benzene is a volatile compound (12.7 kPa at 25°C) and is readily transferred from water surfaces to the atmosphere (110). Mackay and Wolkoff (110) have calculated the evaporative half-life of benzene in water to be 37 minutes for one square meter of water at a depth of one meter.

Naphthalene--Previous studies indicate that naphthalene is readily volatilized from the aqueous phase to the atmosphere. One study observed as much as 50 percent of dissolved naphthalene to volatilize in four days (111). Volatilization rates in the environment will depend on a number of factors, such as air and water temperature, wind speed, and wave action.

Fluoranthene--Fluoranthene has a vapor pressure of 1.33 Pa at 25°C. Volatility studies have reported losses to the atmosphere of 36 percent after three weeks and 92 percent after one year (79).

Phenol--Phenol has a moderately low vapor pressure (130 Pa at 40.1°C). Due to its high solubility in water, it will remain in solution in natural waters under most conditions with low losses because of volatilization (79).

Polynuclear Aromatic Hydrocarbons (PAH)--The volatility of PAH compounds at 25°C is very low, ranging from 0.9 MPa for phenanthrene (three rings) to 20 MPa for coronene (seven rings). Therefore it is unlikely that significant amounts of these organic compounds will be discharged as vapor phase emissions. Also, the adsorption of PAH compounds to particles in either air or water reduces their activity and therefore makes it unlikely that significant quantities of these compounds will pass from the water to the air by codistillation (112).

Physical-Chemical Removal Processes--

Inorganic materials generally occur in the atmosphere as aerosols, adsorbed to particulate matter, or as particulate matter, and are removed from the atmosphere through rain or dry deposition. Atmospheric particles resulting from air pollution by heavy metals (lead, selenium, zinc, antimony, vanadium, arsenic, cesium, and chromium) generally have small diameters (0.1 to 1 μm) and are thus characterized by dry deposition velocities less than 0.7 cm/sec. Particles derived from soil or coal dust occur in larger diameters (1 to 100 μm) and consequently have dry deposition velocities greater than 0.7 cm/sec. In addition, air pollution usually obeys a power law of dilution by dispersion such that concentration decreases very rapidly away from the point source. For example, a smelting operation in Sudbury, Ontario yielded the following relationship (113):

$$y = ae^{-bx}$$

where y is the metal content of the soil (ppm)
x is the distance from the smelter (km)
a is a site specific constant related to the concentration at the source (ppm)
b is a site specific constant related to factors such as the inverse of stack height (km^{-1})

Using this type of relationship for metal concentration in surface soil, Pearson's (114) product moment correlation (r),* with 9 degrees of freedom was 0.771 for nickel (p less than 0.01), 0.934 for copper (p less than 0.001), 0.560 for cobalt (p less than 0.1), 0.609 for iron (p less than 0.05), 0.531 for zinc (p less than 0.1) and 0.653 for lead (p less than 0.05). The factor, "b", in the above equation ranges from 0.007 for zinc to 0.077 for copper. The "p" referred to above is the probability that the relationship found exists solely due to chance.

One consequence of the power law of pollutant dilution by dispersion is that the concentration increases exponentially toward the point source. A result is that flora appear to exhibit an ecological threshold response. In actuality, the flora exhibit a variety of sublethal effects related to the heavy metal distribution. Since the pollutant concentration is changing exponentially, the loss of a particular flora component from the community occurs over a relatively short distance from the pollution source.

*Pearson's product moment correlation is a common statistical test used to determine if two sets of data are correlated by some simple linear equation. In this case, the linear equation is lny = bx+a.

Vegetation alters the composition of aerosols by impaction and subsequent adsorption of heavy metals on floral surfaces. Precipitation is altered during contact with and partial adsorption or desorption and internal transport of pollutants by the flora through adsorption and leaching. Ultimately the soil and, secondarily, the floral biomass will be the repository of the heavy metals generated by coal liquefaction technologies.

The aerosols and larger particulate matter emanating from coal liquefaction plants can be altered by oxygen in the atmosphere or by photochemical reactions. For example, metallic antimony combines with oxygen to form antimony trioxide, which is then subject to photoreduction (115). Of the carbonyls formed under reducing conditions, octa(carbonyl)-dicobalt is unstable in air, iron carbonyl oxidizes rapidly in air, and nickel carbonyl oxidizes slowly in air. The carbonyls that are either unstable or rapidly oxidized in air probably will not pose an air pollution problem. Fly ash from the steam generation plant is likely to contain calcium oxide which reacts with water vapor to form calcium hydroxide. The latter, upon contact with the carbon dioxide in the atmosphere, will form either calcium carbonate or calcium bicarbonate. Metallic mercury has a vapor pressure of 0.16 Pa and a saturation concentration in air of 13.2 micrograms per cubic meter at 20°C (116). The atmosphere is the most important global transport path for mercury. The vapor pressure of selenium at room temperature is 1.2 Pa and thus it volatilizes fairly readily from soils, leaves of living plants, the lungs of animals, and water.

The dearth of information on the chemical form of the trace element pollutants that enter the atmosphere from coal liquefaction plants makes it difficult to describe the

removal mechanisms in detail. In past studies of smelting operations, organisms, usually higher plants or lichens, living adjacent to point sources of pollution have been used as indicators. Researchers have found it difficult to separate the influence of the acid moieties (sulfate, nitrate, or chloride) from that of the heavy metals on the distribution of indicators. The air pollution associated with coal liquefaction plants may pose the same type of problem.

Many aromatic constituents of coal conversion effluent streams are subject to photochemical oxidation under naturally occurring illumination. Carcinogenic PAH compounds such as benzo(a)pyrene and 1,2-benzanthracene are rapidly photo-oxidized in aqueous solutions containing a large amount of acetone, a singlet oxygen photosensitizer (83).

In the global atmosphere, most carbon monoxide is produced by hydroxyl radicals oxidizing methane that emanates from natural sources. The same hydroxyl radicals account for a large amount of global carbon monoxide loss. These two competing formation and destruction processes can account for the 0.1 year residence time of carbon monoxide estimated by radiocarbon measurement. While important in explaining the global balance, oxidation of carbon monoxide by hydroxyl radicals is insignificant in polluted atmospheres, being unable to compete with the much faster reactions of hydrocarbons with hydroxyl (117).

Aerated soil is capable of removing hydrocarbons from dilute auto exhaust. These hydrocarbons in the dilute auto exhaust include acetylene, ethylene, propene, butane, toluene, pentanes and 42 other gases. The percentage of these individual gases is unknown (118).

Benzene, toluene, naphthalene, and other compounds may be removed from the atmosphere and enter the hydrosphere by various means; possibilities are washout in rain, dry deposition, or direct diffusion into the water surfaces. Such atmospheric removal systems are believed to contribute significantly to hydrospheric contamination by these compounds (79).

Waterborne Wastes

Physical-Chemical Characteristics--

For inorganic elements, a key factor affecting the aqueous environmental fate is the leachability of trace metals from coal piles, tailing wastes, and gasification-liquefaction ashes. The interaction of the released trace elements in the receiving water systems depends on such factors as the redox potential, alkalinity, suspended and dissolved solids concentrations, biogeochemical cycling, and bottom sediment characteristics. These characteristics are site specific in and only very general statements can be made regarding their influence.

Since most of the trace elements are associated with the solids waste products rather than the liquid or gaseous products, a number of workers have conducted laboratory studies on the leachability of trace elements from various kinds of solids associated with the coal liquefaction process. The results of such studies are also a function of experimental conditions such as method of sample preparation, method of leaching (batch or column-reflux), solids-liquid ratio, particle size distribution, temperature and pH conditions, sample composition, time for leaching, and origin of solid material. Inasmuch as the information on the holding pond treatment for these solids is not well defined at

present, the laboratory studies can only provide a range of postulated impacts of coal liquefaction-associated solids on receiving waters.

The concentrations of the constituents in water after contact with the piles of storage coal are not well known. They are presumed to be a function of the type of coal, extent of exposure to local climatic conditions, acidity of rainfall, temperature within the pile, and length of contact time between the water and coal. The runoff water from eastern coal piles is likely to be acidic due to the interaction of water with the sulfur oxides originally present in the coal or formed by the action of atmospheric oxygen with other sulfur-containing compounds in the coal. This interaction will result in the formation of sulfuric and sulfurous acids. The runoff from western coal will probably be less of a problem in this regard, since western coals usually contain less sulfur, and the receiving land and waters are usually slightly alkaline which will tend to neutralize the acidic components.

In addition to coal piles, the huge quantities of residue which will be produced from liquefaction plants will also be potential sources of leachates. The leachability of the constituents of H-Coal liquefaction residue at varying pHs is illustrated in Table 77. This table shows that the leaching of aluminum from H-Coal residue under argon increases with a decrease in pH from 5.53 to 2.30. The leaching of calcium and lead from H-Coal residue under air increases with a decrease in pH. Under both anaerobic and aerobic conditions, magnesium, potassium, strontium, and silicon are more readily leached from H-Coal residue at lower pH.

This same pH range has little effect on the leachability of boron, cadmium, chlorine, chromium, fluorine, sodium, sulfur, aluminum (under aerobic conditions only), and silicon (under anaerobic conditions only). Under anaerobic conditions with the indicated change in pH, the amount of iron leached increases by a factor of more than 900, manganese by a factor of more than 130, and zinc by a factor of about 40. In this same experiment under aerobic conditions, the factors are 300, more than 120, and 27, respectively.

From Table 77, we can estimate that waters in contact with H-Coal residue for a long period of time under anaerobic conditions will be likely to contain more than one percent of the concentration of the solids residue of boron, cadmium, calcium, chlorine, fluorine, manganese (only if the water has a pH less than 5.5), nickel (if the pH of the water is 2.3), sodium, strontium (pH less than 5.5), sulfur (as sulfate), and zinc (pH less than 2.3). Under aerobic conditions, the list is essentially unchanged except that nickel and zinc are deleted. One would expect these elements to be found in runoff water from the H-Coal solids residue.

For most studied runoff from coal piles and associated solids, the COD is higher than the BOD which suggests that much of the organic matter is refractory in nature. Fortunately, the soluble carbonates leached from the tailings, coupled with the high pH of groundwater in mining areas, tend to precipitate heavy metals, thereby reducing their potential impact. In addition, hard water generally diminishes the toxicity of many heavy metals. However, the humic acids and small aromatic compounds possess a capability for complexing heavy metals, thereby facilitating their mobilization into a soluble phase. It is presumed that in most freshwater

receiving bodies carbonate and/or hydroxide equilibria will dominate organic complexation reactions (119).

Solids formed during liquefaction are referred to as char, and much of this material is cycled to the hydrogen generation unit which produces slag and ash as solids residues. The slag will be transported directly to a landfill, while the ash passes through a clarifier or settling pond after which the ash is dewatered prior to its disposal. The gasification condensate and sour water from the liquefaction-gasification are processed in some of the following steps to remove potential toxigenic, mutagenic, teratogenic, and carcinogenic substances. The steps include tar-oil-water separation, phenol extraction, ammonia stripping, activated carbon treatment, pH adjustment, and biological oxidation. Much of the treated water produced is recycled while some will be released into the environment (120).

The interplay of these factors is reflected by the wide range of values in Table 104, showing the concentrations (in ppm) of various elements, the conductivity (in μ5), the pH, and the acidity of several samples ("n") of runoff from coal refuse and spoil piles in different areas of the eastern United States.

Table 105 gives the solubility of various polynuclear aromatic hydrocarbons in water. Some of the PAH are significantly water soluble (up to greater than 30 ppm) and could be expected to present definite pollutant and treatment and control problems.

TABLE 104. LEACHABILITY OF INORGANIC ELEMENTS FROM COAL REFUSE AND SPOIL PILES* (121)

	n**	Arithmetic mean	Geometric mean	Standard deviation	Standard error of the mean	Range
Acidity***	32	6572		8396	1484	7-34300
pH	32	3.2	3.1	1.0	0.2	2.1-6.9
Conductivity	26	5863	4035	4636	909	640-16500
Sulfate	32	6899		9432	1667	310-40500
Iron	32	1961	333	2799	495	1-13500
Aluminum	23	231	59	331	69	1-1014
Manganese	26	58	27	102	20	3-545
Calcium	16	236	188	130	32	30-450
Magnesium	16	199	135	192	48	26-680
Sodium	13	183	87	230	64	14-780
Potassium	12	12	7	12	3	1-42
Zinc	11	1.8	0.8	2.0	0.6	0.1-7.2
Copper	3	0.16	0.16	0.02	0.01	0.14-0.18
Nickel	7	0.9	0.8	0.6	0.2	0.25-1.7

* Taken from different areas of the eastern U.S.
**Number of samples
***Acidity as ppm $CaCO_3$

TABLE 105. SOLUBILITY OF POLYNUCLEAR AROMATIC HYDROCARBONS IN WATER (122,123,124)

PAH compound	Experimental conditions	Solubility (ppb)
Phenanthrene	Shaking crystals in distilled water for 3 months at 25°C	1,600
1,2-Dibenzanthracene		10
Pyrene		175
Anthracene		75
Chrysene		6
Naphthacene		1.5
1,2,-5,6-Dibenzanthracene		0.6
2-Methylnaphthalene	Standard hydrocarbons dissolved in hexane added to doubly distilled water or artificial sea water and shaken for 12 hours at 25°C.	24,500
Naphthalene		31,300; 22,000 (dw) (sw)
Biphenyl		7,450; 4,760 (dw) (sw)
Acenaphthene		3,470
Phenanthrene		1,070; 710 (dw) (sw)
Mixtures of Naphthalene and Phenanthrene (Solubility of Phenanthrene)		1,060
Mixtures of Biphenyl and Phenanthrene		910
Mixtures of Acenaphthene and Phenanthrene		1,010
Mixtures of 2-Methylnaphthalene and Phenanthrene		800
Mixtures of Naphthalene and Acenaphthene and Phenanthrene (Solubility of Phenanthrene)		1,010
Phenanthrene	Nephelometric Method at 27°C (Crystals of hydrocarbons added)	1,600
4,5-Methylphenanthrene		1,100
Fluoranthene		240
Pyrene		165
Anthracene		75
9-Methyl-1,2-Benzanthracene		66
11-Methyl-1,2-Benzanthracene		55
10-Methyl-1,2-Benzanthracene		55
1,2-Benzanthracene		11
6-Methylchrysene		65
5-Methylchrysene		62
Chrysene		1.5
5,6-Dimethylchrysene		25
5-Methyl-3,4-benzopyrene		0.8
3,4-Benzopyrene		4
20-Methylcholanthrene		1.5
Cholanthrene		3.5
Picene		2.5
Perylene		< 0.5
Naphthacene		1.0
1,2,7,8-Dibenzanthracene		12
1,2,5,6-Dibenzanthracene		0.5
9,10-Dimethyl-1,2-benzanthracene		43
10-Amyl-1,2-benzanthracene		0.8
10-Ethyl-1,2-benzanthracene		45

Physical-Chemical Removal Processes--

When trace elements are transported to receiving water bodies, they can be removed by sediment-water interactions, geochemical interactions, storage in biological tissues, and conversion by metabolic processes. In the abiotic compartments of ecosystems, trace elements are present in dissolved, colloidal, or particulate form. Generally, except for iron, the colloidal component represents a small fraction of the total trace element load transported. For small streams the dissolved component is usually predominant, while rivers flowing over flat, flood-plain regions contain a major fraction in the suspended solids.

Table 106 presents, for aquatic systems, the solubility products of the major geochemical reactions that control the solubility of trace elements. Under reducing conditions, the formation of highly insoluble sulfides controls the equilibrium concentrations of dissolved trace elements. According to Bowen (76), the order of solubility products of the sulfides is antimony, mercury, copper, lead, cadmium, cobalt, nickel, zinc, iron, manganese, tin, magnesium and calcium. The smaller the solubility product, the more insoluble the precipitate is and the lower is the equilibrium concentration of the dissolved, reduced species of the element.

Several other factors influence physical-chemical removal. Under oxidizing conditions, the soluble concentration is controlled by the anion with the lowest solubility product, other factors being constant. The stability constants between the trace element and potential inorganic or organic complexing agents also influence the equilibrium concentration. For organic chelates, stability decreases in the following order: mercury, copper, nickel, lead, cobalt and zinc,

TABLE 106. PHYSIOCHEMICAL AND RELATED DATA FOR METALS (77)

Metal	Electro-negativity	Ionic potential	Solubility product constant (K_{SP})[c]								Stability constant (log K)[c]
			CO_3^{2-}	OH^-	HPO_4^{2-}	PO_4^{3-}	S^{2-}	SO_4^{2-}	AsO_4^{2-}	SeO_3^{2-}	
Antimony	1.82	3.95(3)*	—	10^{-41}(3)	—	—	10^{-93}(3)	—	10^{-16} (Al(3))	10^{-5} (Ca)	—
Arsenic	2.20	1.35(3)	—	—	—	—	—	—	10^{-18} (Ca)	10^{-5} (Mg)	—
Barium	0.97	1.49(2)	10^{-8}	10^{-1}(2)	10^{-29}(2)	—	—	10^{-10}(2)	10^{-20} (Mg)	10^{-31} (Fe(3))	7.8(1)
Beryllium	1.47	5.72(2)	—	10^{-20}(2)	—	10^{-38}(2)	—	—	10^{-20} (Fe(3))	10^{-7} (Mn(2))	—
Bismuth	1.67	3.12(3)	—	10^{-30}(3)	—	10^{-23}(3)	10^{-91}(3)	—	10^{-29} (Mn(2))	—	1.4(3)
Cadmium	1.46	2.16(2)	10^{-14}	10^{-13}(2)	—	10^{-32}	10^{-28}(2)	—	—	—	16.6(2)
Cesium	0.86	0.60(1)	—	—	—	—	—	—	—	—	—
Chromium	1.56	4.77(3)	—	10^{-19}(2), 10^{-30}(3)	—	10^{-23}(3)	—	—	—	—	—
Gallium	1.82	4.84(3)	—	—	—	—	—	—	—	—	20.3(3)
Germanium	2.02	7.55(4)	—	—	—	—	—	—	—	—	—
Lead	1.55	1.67(2)	10^{-14}(2)	10^{-15}(2)	10^{-9}(2)	10^{-42}(2)	10^{-28}(2)	10^{-8}(2)	—	—	18.3(2)
Lithium	0.97	1.47(1)	10^{-1}	—	10^{-1}(1)	—	—	—	—	—	2.8(1)
Mercury	1.44	1.82(2)	10^{-16}(2)	10^{-25}(2)	10^{-13}(2)	—	10^{-53}(2)	—	—	—	21.8(2)
Nickel	1.75	2.90(2)	10^{-9}(2)	10^{-15}(2)	—	10^{-30}(2)	10^{-20}(2)	—	—	—	18.6(2)
Niobium	1.23	7.25(5)	—	—	—	—	—	—	—	—	—
Palladium	1.35	1.67(2)	—	—	—	—	—	—	—	—	18.5(2)
Rubidium	0.89	0.88(1)	—	—	—	—	—	—	—	—	—
Scandium	1.20	4.10(3)	—	—	—	—	—	—	—	—	—
Selenium	2.48	8.00(4)	—	—	—	—	—	—	—	—	—
Silver	1.42	0.80(1)	10^{-11}(1)	10^{-8}(1)	—	10^{-18}(1)	10^{-50}(1)	—	—	—	7.3(1)
Strontium	0.99	1.79(2)	10^{-9}(2)	10^{-1}(2)	10^{-28}(2)	10^{-27}(2)	—	—	—	—	8.6(2)
Tellurium	2.01	5.72(4)	—	—	—	—	—	—	—	—	—
Thallium	1.44	0.68(1)	—	10^{-1}(1), 10^{-43}(3)	—	—	10^{-23}(1)	—	—	—	22.5(3)
Tin	1.72	5.64(4)	—	10^{-28}(2)	—	—	10^{-26}(2)	—	—	—	—
Titanium	1.32	5.88(4)	—	—	—	—	—	—	—	—	17.3(3)
Vanadium	1.45	8.48(5)	—	10^{-15}(2), 10^{-34}(3) 10^{-23}(5)	—	10^{-24}(3)	—	—	—	—	12.7(2) 25.9(3) 18.1(5)
Zirconium	1.22	5.06(4)	—	10^{-52}(4)	10^{-18}(4)	—	—	—	—	—	29.9(4)

*Numbers in parenthesis are the valence states for the elements.

cadmium, iron, manganese, magnesium, and calcium (79). Chelation tends to increase the soluble concentration of a trace element over that which would prevail without chelation. For a simple equilibrium between dissolved and particulate forms of copper, for example, the soluble concentration under aerobic conditions is a function of the degree of

solubility of copper carbonate and the stability of the complexes formed with carbonate and hydroxide ions, amino acids, humic acids, polyphosphate and nitrilotriacetic acid moieties from anthropogenic discharges. Copper is also adsorbed to sediments and suspended particulate matter (especially clays).

The partitioning of a trace element between different solids and dissolved phases is a function of a variety of environmental factors that can only be effectively dealt with on a site-specific basis. Even at a specific site, the form of an element is important in determining its environmental fate. This is illustrated by the affinity of trivalent chromium for attachment to particulate matter, while hexavalent chromium remains primarily in solution.

There are also synergisms of interest. The uptake by bottom sediment can interact with other factors to reduce the amount of trace elements in solution. For example, a study of Irwin Creek in North Carolina demonstrated that the arsenic concentration was 1000 ppm at the discharge, but had been decreased to 10 ppm at the first sampling station due to sediment uptake and microbial production of volatile organoarsines (125,126).

Ammonia, when added to water, is strongly sorbed to particulates and colloidal particles. This is especially true in alkaline waters with a high humate content. Ammonium nitrate loss from ponds is believed to result primarily from denitrification of nitrate in the bottom sediments and volatilization of ammonia across the air-water interface (127).

Certain compounds have distinct characteristics making them good candidates for removal by physical-chemical processes. Studies indicate that naphthalene may be slightly concentrated in bottom sediments (by one to two orders of magnitude) (128,129). However, it is generally agreed that naphthalene is not significantly taken up from bottom sediments by macroorganisms (130). The main route of uptake seems to be from the water surrounding the organisms.

Adsorption onto soils and sediments is more pronounced for the larger multi-ring, organic compounds. Centrifugable solids in natural waters accumulate polycyclic aromatic hydrocarbons (PAH) several thousand-fold over the levels found in water on a weight:weight basis (83,131). The multi-ring compounds include those containing nitrogen, phosphorous, or sulfur in addition to carbon and hydrogen and are referred to as the heterocyclic group (a PAH subgroup).

PAH compounds, in general, are readily adsorbed onto a wide variety of particulate matter (132,133). Studies of the photodecomposition of benzo(a)pyrene adsorbed onto calcium carbonate in aqueous solutions demonstrated that the process is a first order decay reaction that is accelerated by higher light intensity, temperature, and oxygen levels. The decomposition reaction under the experimental conditions employed was independent of pH and ionic strength (133).

While adsorption is more pronounced for larger multi-ring compounds, volatilization is most important as a removal mechanism for relatively nonpolar small molecules (i.e., 1- and 2-ring compounds) (83). Microbial degradation is undoubtedly a major mechanism for compound removal in sediments, although levels found in river bottoms and

degradation rates measured in soils each suggest that polycyclic compounds may possess turnover times of months or years (83).

Solids Waste and Residues

Physical-Chemical Characteristics--

The major route of disposal for solids waste from coal liquefaction plants will involve utilization of landfills either for direct disposal or for disposal of solids removed from settling ponds. The leachability of trace elements from various solids residue generated during coal liquefaction or its auxiliary has already been discussed. In a landfill operation the physical characteristics of the solid residue are important in influencing such parameters as water permeability, compaction, moisture content, and specific weight. The dearth of information on the quantities and physical characteristics of the solids residue generated during coal liquefaction makes analysis difficult at present. The characteristics of the soil in the landfill play an important role in influencing erodibility and the capacity of the soil for confining potentially toxic chemicals to the landfill. For example, the three-layer aluminosilicate clays (smectities) can absorb much more water and have a higher ion exchange capacity than the two-layer aluminosilicate clays (kandites).

Physical-Chemical Removal Processes--

Inorganic ions and organic molecules are needed for forming soluble complexes. Much higher levels of these agents are available in soil than in water. Also the microbial populations in soil are much denser than those found in most aquatic systems. The grazing activities of

the soil fauna keep the microbial populations in an active state of growth and physiological activity.

The inorganic and organic complexing reactions greatly increase the soluble concentration of trace metals in the soil. This may be offset somewhat by the activities of the soil microflora as they convert trace elements to a less available form through reduction or formation of sulfide ions under anaerobic conditions. On the other hand, those activities may facilitate the leaching of trace elements with subsequent passage into lower soil layers.

The soil particles themselves influence trace elements through their ion exchange capacity. Ion exchange occurs when the trace element is adsorbed and calcium, magnesium, or alkaline earth cations are released into the soil water. Soils have a much greater exchange capacity for cations than anions. This exchange capacity is exerted primarily by clay particles and organic colloids which tend to trap added trace elements in the surface layers of the soil. Trace metals with vacant "d" orbitals, such as copper, iron, zinc, manganese, and molybdenum, tend to be bound to soil organic matter. The movement of the trace elements is a function of cation exchange, water flow rate, pH, Eh, migration of soil fractions, and existing concentration of that trace element in the soil.

Certain precipitation reactions occur at the surfaces of solids phases in the soil and are difficult to separate from adsorption reactions. For example, cobalt and nickel may form hydrous oxides on the surface of iron hydrous oxides or clay particles. For magnesium in the soil an equilibrium exists between water soluble magnesium (II), exchangeable magnesium (II), colloidal hydrated magnesium

oxide or magnesium dioxide and inert magnesium dioxide. The divalent form of magnesium is soluble in acid soils, while the tetravalent form can be hydrated and reduced (either chemically or biologically) to the insoluble oxide at pH above 7.5 (134). As a consequence, for trace elements such as magnesium and nickel, acidic soils make more of the element available to plants.

Table 107 presents a compilation of some of the biotic and abiotic factors influencing the environmental transport of trace elements in soils. The key factors are the availability of trace elements for uptake and potential bioaccumulation by plants, ability of trace metals to travel through soil to groundwater, and immobilization of trace metals in surface layers of soil from which it can be transported to nearby ecosystems by surface runoff, erosion, or wind-blown dust. Most non-point pollution sources can be attributed to the transport of contaminated sediments. Most cationic trace metals are immobilized in soil and are present in concentrations which would not pose a threat of groundwater contamination unless they are methylated, but the anionic groups pose a potential hazard. A theoretical study of the potential impact of a coal gasification plant on the trace element levels in the surrounding soil after a 40-year period of operation identified copper, mercury, molybdenum, and tin as elements whose endogenous soil levels would be greatly exceeded (78).

BIOLOGICAL CYCLING

This section will consider the biological cycling of trace elements and organic compounds from effluents and

TABLE 107. INTERACTIONS OF SELECTED INORGANIC ELEMENTS IN SOILS

Table : Interactions Of Selected Inorganic Elements In Soils

Element	Microbial oxidation - reduction	Bound by soil organic matter	Solubilized by acid production or chelation	Poor soil drainage increases availability	Reference
Zinc		+ (a)	+		76
Vanadium	+			+	76,77
Thallium			+		76
Tellurium	+				76
Tin		+		+	76,77
Selenium	+	+			76
Nickel			+	+	76,77
Molybdenum	+	+			76
Mercury			+		76
Manganese	+	+ (a)			76
Magnesium		+ (a)			76
Lead		+	+		76
Iron	+		+		76
Iodine	+	+			76
Germanium		+			76
Chromium	+				76
Copper		+	+		76
Cobalt			+	+	76,77
Cadmium		+	+		76
Calcium		+(a)			76
Bromine		+			76
Aluminum			+		76
Arsenic	+		+		76
Sulfate	+	_(b)			76
Nitrate	+	–			76
Borate		–		+	76,77
Phosphate		+	+		76

(a) Relatively easy to leach from soil organic matter.
(b) Sulfate, nitrate and borate apparently are not bound by soil organic matter.

emissions of coal conversion facilities. Little is known about the potential hazards to the general public from coal conversion processes. The potential effects of processing oil and coal have been summarized as follows:

> Fugitive losses were identified as the major source of emissions in the refinery. The compositions of the fugitive emissions are difficult to quantify. Among the four assessed coal and oil processes, coking is the most offensive one. Coal gasification is likely to produce equally dangerous materials as the coke plant, but they will probably be somewhat more contained than coke oven emission. The environmental impact of coal liquefaction is not well defined. However, the liquefaction products will probably be more hazardous than crude oil products, and their refining and utilization will be worse offenders than the corresponding petroleum operations. (135).

There is evidence that aqueous wastes from coal conversion may contain appreciable amounts of phenols, organosulfur, and other organic compounds as well as some heavy metals. Also, the ash produced from coal conversion will be greater than from petroleum refining. Yet there is essentially no information available about the effects of chronic, low-level exposure to such materials. There is no clear information about the potential effects of chronic exposures to the products and effluents from coal conversion technology on the health of the general public (136). The following discussions illustrate the multitude of potential biological cycling and impacts of these products and effluents.

Trace Elements

Uptake, Metabolism and Excretion--

Microorganisms--Some compounds of antimony (137), arsenic (138,139), lead (140), mercury, molybdenum, nickel,

selenium, silver, sulfur, titanium, vanadium, and zinc (76,79), or the elements themselves are subject to microbial metabolism and undergo oxidation, reduction, methylation, and/or demethylation. The methylated forms are highly toxic, cross membrane barriers with relative ease, and are more likely to become airborne because they are more volatile than the elements themselves (79). Microbial action also can affect the availability of many elements in soils and waters. Silicate minerals are attached by the organic acid liberated by Bacillus siliceus (76). Organic water fermented by bacteria in the absence of oxygen can dissolve considerable amounts of cobaltous oxide, cupric oxide, ferric oxide, manganese dioxide, molybdenum trioxide, lead dioxide, and zinc and smaller amounts of chromium trioxide, nickel monoxide, titanium dioxide, and vanadium pentoxide (76).

The kind and rate of microbial metabolism depends, in part, on the chemical form of the trace element. For example, alkylation of inorganic lead salts is considered a very difficult reaction mechanism in view of the instability of the postulated first intermediate, monomethyl lead salt. However, the conversion of lead nitrate and lead chloride to Me_4Pb (tetramethyl lead) was reported for a mixed bacterial culture from Lake Ontario (141). No such transformation was detected with lead hydroxide, lead cyanide, lead oxide, lead bromide, or lead palmate. The methylation of trimethyl lead acetate (Me_3PbOAc) to volatile tetramethyl lead (Me_4Pb) is, in contrast, a fairly simple transformation for bacteria (142).

In the laboratory, bacterial methylation activity is frequently higher under anaerobic conditions than under aerobic conditions. However, in natural fresh water the

reverse seems to be true. In sediments, where anaerobic conditions are more likely to occur, hydrogen sulfide, ubiquitous in the natural environment under anaerobic conditions, combines with mercury to form insoluble mercuric sulfide. Thus, under aerobic conditions in fresh water, methylation rates are likely to be higher than under anaerobic conditions, where the formation of mercuric sulfide binds mercury and hinders methylation (134).

Invertebrates--The amount of pollutant taken up by bottom dwellers is a function of the type of sediment to which the pollutant is absorbed. For example, a laboratory study of the uptake of sediment-bound heavy metals by the clam, Macoma balthica, (143), showed the clams could take up silver most effectively from synthetic calcite (calcium carbonate) and maganese oxides. Silver adsorbed to synthetic calcite was the only sediment for which the organism exhibited tissue silver levels with a bioconcentration factor greater than one (dry tissue/dry sediment ratio ranged from 3.7 to 6.1). The uptake of silver from amorphous iron oxides was greater for freshly prepared precipitates than those which had been aged for 16 to 24 hours. The lowest silver uptake occurred from biogenic calcium carbonate and organic detritus. The uptake of sediment-bound silver was greater than that for zinc or cobalt. However, the heavy metal uptake from sediment-bound metals is generally lower than that observed for soluble metal forms (143).

The rate of uptake of metallic compounds may be strongly influenced by temperature. Fowler and Benayoun (141) observed a 400 percent increase in the rate of cadmium uptake in shrimp over a 26-day period at 22°C as opposed to 8°C. On the other hand, mussels were not affected by the change in temperature.

Vertebrates--Table 108 gives the approximate amount of various elements absorbed and excreted by various routes. These data are based on laboratory experiments with a number of mammal as well as human studies. Since the absorption of trace elements depends on many factors, the numbers in Table 108 are only indicative of general trends.

The absorption of an element depends upon its chemical form. In general, univalent cations readily diffuse across the gut wall, become more or less uniformly distributed in the soft tissues, and are fairly rapidly eliminated in urine. Divalent cations appear to be much less readily absorbed across the gut wall. It is still uncertain how efficiently major elements such as calcium and magnesium are absorbed, since the reverse process may take place lower down in the gut. Once absorbed, most divalent cations concentrate in bone, and are relatively slowly eliminated in the urine and feces. The affinity for bone is greatest for those ions most closely resembling calcium. Thus barium, lead, and strontium are notable bone-seekers; but copper, cobalt, and nickel diffuse into the soft tissues, and a sizeable percentage is excreted in the urine. Polyvalent cations diffuse still less readily across the gut wall and remain in the fecal material. It should be noted, however, that the extent of absorption across the intestinal wall can be profoundly modified by other components of the diet. Well-known examples include the effects of Vitamin D on calcium absorption, of sulfate on barium and molybdenum absorption, and of aluminum on the absorption of phosphate (76).

In addition to the information contained in Table 108, lead and zinc cross gills; arsenic, mercury, nickel, selenium, and thallium cross the skin but lead does not; zinc crosses

TABLE 108. ROUTES OF ABSORPTION AND EXCRETION FOR VARIOUS ELEMENTS

Element	Excreted in feces	Excreted in urine	Absorbed in lung	Intestinal absorption	Cross placental barrier	Reference
Antimony	+	≥ 10%	+	5-70% (little as III or V)		76,79,144,145
Arsenic	+	≥ 10%	+	5-70%		76,146,140,147
Beryllium	largely		+	poor (< 5%)		76,79
Boron		+	+	> 70%		76
Bromine		+	+	> 70%		76
Cadmium	largely		+	poor (< 5%)	+	146,148,149
Chlorine		+	+	> 70%		76
Chromium	+	+		> 70%		149
Cobalt		≥ 10%		5-70%		76
Copper		≥ 10%	+	5-70%		148,76,150
Fluorine		+	+	> 70%		76
Iodine		+	+	> 70%		76
Lead	largely	+	primarily	poor (5-10%)	+	76,148,146
Mercury	predominant	≥ 10%	50-100%	5-70%	+	76,148,146,151,149,152
Nickel		≥ 10%	+	5-70%		76,146,148,153,154
Phosphorus		≥ 10%	+	5-70%		76
Ruthenium	largely		+	< 5%		76
Selenium		50-80%	+	35-85%		146,79,155
Sulfur		≥ 10%	+	5-70%		76
Tellurium		+	+	> 70%		76
Thallium	+	+			limited	76,79,74,156
Tin	largely		+	5-70%		76
Vanadium	+	+		> 70%		76
Zinc	largely	+	+	< 5%		76,148,77,157

the entire body surface of fish; and mercury and nickel are excreted in the perspiration. Aluminum, americium, bismuth, cerium, gallium, gold, indium, iron, lanthanum, manganese, niobium, palladium, platinum, plutonium, polonium, protactinium, ruthenium, scandium, tantalum, titanium, yttrium, and zirconium all are poorly absorbed from the intestine (less than 5 percent) and largely excreted in the feces. Five to 70 percent of the barium, calcium, radium, strontium, and tin is absorbed from the intestine; these elements are mostly excreted in the feces. Five to 70 percent of the cobalt, copper, magnesium, silicon, sulfur, and uranium is absorbed from the intestine with at least 10 percent of these elements being excreted in the urine. More than 70 percent of the germanium, molybdenum, nitrogen, silver, and tungsten is absorbed from the intestine. Germanium, nitrogen (greater than 10 percent), silver, tungsten, molybdenum, rubidium, osmium, and sodium are excreted in the urine (76).

Plants--

Through a comprehensive literature search, Vaughan et al. (78) have determined that metal ions absorbed from the soil by plants basically become either chemically reactive, relatively unreactive, or capable of remobilization.

Elements which are chemically reactive remain concentrated in the roots and require an ion carrier to maintain mobility. They show a log profile from root to shoot tip. This accumulation may result from an exchange of the free ion to cell wall fragments. Elements included in this group are chromium, lead, selenium, tellurium, thorium, and vanadium.

The relatively unreactive ions become uniformly distributed in the plant via the transpirational stream. The mobile ions generally accumulate in leaves and to a lesser extent in stem and reproductive tissues. These elements include silver, arsenic, beryllium, cobalt, copper, manganese, radium and zinc.

A few nonmetabolic ions such as cadmium and nickel appear to be phloem mobile or capable of remobilization. These ions tend to accumulate in seeds and fruit during plant senescence.

The absorption of a trace element by plants is also influenced by the presence of other trace elements. For example, zinc and aluminum slightly inhibited beryllium absorption, whereas magnesium had no influence, and dinitrophenol enhanced beryllium absorption (103).

Bioconcentration--

Bioconcentration refers to the ability of an organism to accumulate a pollutant above the ambient level. This phenomenon may result from an energy-requiring, active transport mechanism by which the organism concentrates a micronutrient from the environment. However, the phenomenon also occurs if the pollutant is sequestered in the organism. This sequestration may result from chemical reactions (for example with protein sulfhydryl groups) or physical phenomenon (for example, a lipophylic compound dissolving in high lipid tissue and thus removing itself from the aqueous excretion process). Higher aquatic organisms such as fish can incorporate arsenical compounds and metabolize them, yielding high-molecular weight lipid material (139).

When soil concentrations of essential micronutrients such as manganese, zinc, cobalt, copper, and molybdenum are

increased, plants continue to accumulate them, sometimes to toxic levels. Nonessential elements such as cadmium or nickel may also be bioaccumulated. The uptake of nonessential elements may be affected in part by the fertility of the soil and, ultimately, by the general nutrition of the plant. In a series of sand culture experiments, corn plants grown with insufficient levels of phosphate accumulated 5 to 10 times more added lead (as lead nitrate) than did plants grown with sufficient phosphate levels. Phosphate-sufficient plants also were less sensitive to the lead that was accumulated. Lead was added in high enough quantities to insure that decreased accumulation was not just the effect of lead phosphate precipitation (68).

Other conditions such as plant growth period, age, or water stress may affect uptake of trace elements, and plant rooting characteristics are likely to be important as well. For example, most of the acetic acid-soluble lead, cadmium, and zinc were found in the upper 3 cm of heavily polluted soils near a large lead and zinc smelting complex; and in these soils, plants with shallow, spreading roots are probably exposed to more toxic concentrations than deeper rooting species. Also, plants with greater root surface area generally have more potential for uptake (68).

Unfortunately, the bioconcentration ratio, even for a single plant species is not constant, but is a function of the available (total, extractable, or soluble soil fraction) pollutant level in the soil. The bioconcentration level generally increases with decreasing soil concentration. The bioconcentration also depends on the uptake (minus the amount lost) and, hence, is subject to all the variables discussed previously. In addition, uptake rate appears to reach a maximum in those experiments with sufficient data to plot saturation kinetics.

The bioconcentration factors for animals are also functions of the difference between uptake and elimination and are subjected to all the factors affecting uptake discussed previously.

Weir (79), using the data of Mason and coworkers (158) on mercury uptake by the oyster, Hermione hystrix, calculated the following relationship between the bioconcentration factor (which ranged from 441 to 1230) and the water concentration, which ranged from 10 to 100 ppt:

$$y = 1300-9.4x \quad (r=0.982)$$

where y = the bioconcentration factor (concentration in the oyster/concentration in the water)

x = Concentration in the water (ppt)

z = Pearson's product moment correlation (discussed previously)

Again, Weir (79) used data of Mason and coworkers (158) on the bioconcentration factors of fathead minnows, Pimephales promelas, exposed to methylmercury concentrations ranging from 0.015 to 0.240 ppb. The bioconcentration factors ranged from 45 to 98 and followed the following formula:

$$y = 19.4 - 18.7 \ln x \quad (r=0.997)$$

where: y = the bioconcentration factor (concentration in the fish/concentration in the water)

x = concentration in the water (ppb)

These two equations demonstrate that bioconcentration factors are not constant with differing water concentrations but are related to the water concentrations in relatively complex ways (158).

Table 109 gives ranges of bioconcentrations found for several classes of organisms. These ranges are broad because different species are considered and the bioconcentration factors are functions of the several variables discussed previously. In addition to these variables, bioconcentration factors are functions of inorganic and organic water chemistry and food web dynamics (148). Bioconcentration is a complex process dependent to a great extent on the organism in addition to the physiochemical parameters such as competing ions, ligands, complexes, colloidal suspensions, pH, and temperature. Before the use of bioconcentration factors can be relied upon, careful consideration must be given to the species involved, its growth and nutrient requirements, feeding habits, and metabolism in various environments.

Several elements show no consistent ability to bioconcentrate. For them sediments contained higher content than detrital eaters while detrital eaters and herbivores contained higher concentrations than carnivores. The elements are lead (148,167,171), selenium (148), copper (172), chromium (173), arsenic (79), cadmium (174,148,175), and nickel (176,177,178).

Organics

Uptake, Metabolism, and Excretion--

Microorganisms--Hydrocarbon uptake by microbes is explained by several theories, the most plausible of which is the "micelle" theory. Micelles, which are thought to be surface-active agents produced by microorganisms, solubilize the hydrocarbon drops to an optimal size for microbial pinocytosis. Mixed hydrocarbons (e.g., oil) are first attacked in the n-alkane range. Such selective attacks may cause PAH enrichment of aged mixture samples (87).

TABLE 109. BIOCONCENTRATION FACTORS FOR VARIOUS ELEMENTS IN VARIOUS GROUPS OF ORGANICS

Element	Microorganisms including single-celled algae, fungi, bacteria	Aquatic plants (including marine plants) including the kale, *Brassica oleraced*	Nonaquatic nonagronomic plants	Agronomic plants	Marine invertebrates	Freshwater invertebrates	Marine vertebrates	Freshwater vertebrates	References
Aluminum	1550-25000		0.01						76,78,77
Antimony	50	27-127		0.13-1.46	5	10	40	1	76,78,79
Arsenic	200-71000	50-71000	0.03	0.37-1.23	9-64,100	80-480	38-12,150	1-333	76,77,78,79,68,148,125
Barium	108-260		0.11						76,77,78
Beryllium	1000-1500		0.03	2-16	200	10	200	2	76,77,78,79
Bismuth							15	15	78
Boron	6.6								76
Bromine	2.8				1		1		76
Cadmium	12500	1000-1620	5.3	0.21-1.47	10-250,000	200-30600	3000	30-2000	76,79,77,78,159,148 160,161
Calcium	0.5-10	13-265							76
Cerium		7100	0.5						76,77,78
Cesium	1-100	480	0.03						76,77,78
Chlorine	0.062-1.0	38							76
Chromium	0.5-17000	695-10,000	0.000-0.082	0.01-250	0.1-2000	20-3000	200-400	20-200	76,79,77,78,68,162
Cobalt	277-4600	4425	0.0-0.1	0.019-87	1000	200	100	20	76,77,78,68,162
Copper	100-17000	275	1000	0.02-90	50-10,000	1000	667	200	76,77,78,79,68
Fluorine	0.86				1		1		76
Gallium	4200-12000		0.04						76,77,78
Germanium	15-200		0.25		15,700	33	3300	3300	76,77,78
Iodine	1200-10000	370							76
Iron	2000-140,000	120-4935							76
Lathanium	8300								76
Lead	360-70,000		0.04-2.3	0.44-12	1000-3500	100	300	300	76,77,78,79,163,68,164
Lithium	8		1						76,77,78
Magnesium	0.59-0.96	17			1				76,77,78
Manganese	750-9400	100-100,000	3000	0.41-3	100-10,000	40,000	600	100	76,77,78,68,134

(continued)

TABLE 109. (continued)

Element	Microorganisms including single-celled algae, fungi, bacteria	Aquatic plants (including marine plants) including the kale, *Brassica oleracea*	Nonaquatic nonagronomic plants	Agronomic plants	Marine invertebrates	Freshwater invertebrates	Marine vertebrates	Freshwater vertebrates	References
Mercury	196-42000	12-5915	0.05-42.8	0.009-26.2	1-33,300	100-100,000	1670	45-70,000	76,77,78,79,68,148
Molybdenum	11-1700		0.42-900	55-582	10	10	10	10	76,77,78
Nickel	140-1700	260-1700	0.014-1500	0.008-331	0.08-1000	100	100	100	76,77,78,79,165,166,167 168
Niobium	450-1000	7640	0.11						76,77,78
Phosphorus	10,000-15,000	1600-5480							76,77,78
Potassium	3-50	115							76
Radium	100-4500			84.6-1787	100	250	50	50	76,77
Rubidium	5-50	1230	0.02						76,77,78
Scandium	1500-2600		0.001						76,77,78
Selenium	**2290-7230**	**0.5-2000**	**1-1000**	**0.05-10**	**1000**	**167**	**4000**	**30-167**	**77,78,79,68**
Silicon	**120-17000**								76
Silver	6-250,000				1-200,000	0.7-1,400		0.7->700	76
Sodium	0.14-1.0	19					1		76,79
Strontium	1.0-44	475	0 09						76,77,78
Tellurium				0.64-4.60	100,000	75		400	76,77,78
Thallium	50				10.9-15,000	15,000	10,000	10,000	77,78
Thorium	10		0.004-0.18		2000	500	10,000	30	76,79,78
Tin	92-2900		0.09	0.0003-0.25	1000	1000	3,000	3,000	76,77,78
Titanium	3000-20,000		0.001						76,77,78
Tungsten	87			2.3-24	30	10	30	1200	76,77,78
Uranium	10								76,78
Vanadium	250-1900		0.008	0.011-2.65	50	3000	10	10	76
Yttrium	100-1000	6680							76,77,78,169,170
Zinc	100-208,000	41-2830	40	0.31-39.0	549-260,000	125-16,400	1050-35,400	39-2400	76
Zirconium	350-3000	6230	0.03-1.56	1.4					76,77,78,79
									76,77,78

In general, phenols are subject to rapid microbial degradation while monoaromatics undergo moderate microbial degradation (83). PAH, aromatic amines, and thiophenes are degraded by microbes at very slow rates if at all (83). Acenapthene, anthracene, phenanthrene, diaminobenzene, 1,2-benzanthracene, 1,2,5,6-dibenzanthracene, naphthol, pyridine, and thiosulfate, but not nitrobenzene, are subject to microbial metabolism (79,87).

The following polychlorinated biphenyls have been degraded by at least one bacterial strain: biphenyl, 3,4,3-trichlorobiphenyl, 2,4-dichlorobiphenyl, 2,3,4-trichloro-biphenyl, 3,4-dichlorobiphenyl, 2,3-dichlorobiphenyl, 2,3,2-trichlorobiphenyl, and 4,4-dichlorobiphenyl (87). Naphthalene, anthracene, phenanthrene, diaminobenzene, 1,2-benzanthracene, and 1,2,5,6-dibenzanthracene are subjected to microbial degradation (103) as are pyridine, 4-carboxyl-1-methyl-pyridinium chloride, 3-methyl pyridine and thiophene (87).

The following polychlorinated biphenyls are known to be refractory to at least one strain of microbes known to degrade other polychlorinated biphenyls. They may also be refractory to microbial degradation in the environment. The list includes 2,4,6-trichlorophenol, 2,4,2-tetrachlorobiphenyl, 2,4,6,2-tetrachlorobiphenyl, 2,3,4,5,2,3-hexachlorobiphenyl, 2,3,2- and 2,3,4-trichlorobiphenyl (87).

Specificity by some microorganisms has been noted. A one- or two-atom change in some n-alkanes can mean the difference between total or no bacterial degradation. For example, Pencillium spinulosum, Fusarium oxysporum, and Aspergillus niger all grow on n-dodecane, but not on n-decane, whereas Aspergillus athecius grows on n-tetradecane, but not on n-tridecane.

Co-metabolism is an important process used by microorganisms for degradation of oil hydrocarbons. Cyclohexane is broken down after co-metabolic transformation by one of two Pseudomonas strains, each of which is unable to metabolize it independently. Alkylbenzenes having a methyl- or ethyl-side chain can only be metabolized by co-metabolism.

Plants--Studies in southern California on PAH levels in Valencia oranges reported that 1 to 12 percent of the 3-methyl-cholanthrene; 1,2,6,7-dibenzanthracene; 3,4-benzopyrene; and anthracene penetrated into the rinds of the orange and had half-lives of 120 to 200 days in the field. Most of the PAH compounds found in the air were rapidly degraded (half-life of 1 to 2 days) and did not penetrate into the oranges. No evidence was found of translocation into twig tissue (179).

Invertebrates--Whereas PAH are readily metabolized by fish, crabs, and zooplankton (Daphnia), shellfish apparently are unable to degrade these compounds. Therefore, PAH may accumulate to an extensive degree in the tissues of oysters, clams, and other edible shellfish.

Vertebrates--The enzyme system primarily responsible for PAH metabolism is a multicomponent, microsomal-bound system of mixed-function oxidases (oxygenases), of which aryl hydrocarbon hydroxylase (AHH) is the most important. It is well established that these enzymes may either inactivate or activate the PAH to more carcinogenic, teratogenic, or mutagenic forms.

Gehrs gives information which indicates that the bioaccumulation factor of PAH increases by an order of magnitude for each 50- to 60-unit molecular weight increase (136).

This is reasonable since an increase in molecular weight should increase the lipid solubility relative to the water solubility, which should increase the bioaccumulation factor (180). However, these data are as yet too preliminary for serious consideration as absolutely demonstrating that this phenomenon is indeed occurring in this system.

Laboratory animal studies indicate that many PAH are poorly absorbed from the gastrointestinal tract. When incorporated into the diet or when administered in a single dose to the rat, many PAH are excreted unchanged. Although there is a distribution of values, only naphthalene, phenanthrene, and acenaphthene are not excreted directly.

Carcinogenic PAH such as benzo(a)pyrene and its metabolites are excreted largely in the feces through the biliary system and appear only sparingly in the urine. In studies using mice, the rate of excretion of PAH varied according to the compound; for example, $t_{1/2}$ was 1-3/4 weeks for benzo(a)-pyrene and 12 weeks for dibenzo(a,h)anthracene, and carcinogenicity of the compound was directly proportional to the retention time (136).

Aromatic hydrocarbons are highly lipophilic and readily penetrate cells. Repeated topical application of PAH dissolved in solvent to the skin of mice and rabbits caused systemic effects, indicating that the PAH are absorbed percutaneously. Pathological changes were observed in the blood, spleen, lymph nodes, and bone marrow. Similarly, Stowell and Maas found that 3-methylcholanthrene, repeatedly painted on the backs of mice, produced inflammation of the liver, kidneys and lungs in addition to other systematic changes (146).

Transport Paths and Rates--

There are no comprehensive studies in the literature on the distribution of any PAH compound in the water, sediment, and in various trophic levels within the biota. This is a prerequisite for a discussion of transport paths and rates. The Clipperton Lagoon study (181) gives a crude picture of the environmental distribution of 3,4-benzopyrene and perylene based on sparse sampling. Table 110 presents an overview of this study:

TABLE 110. ENVIRONMENTAL DISTRIBUTION OF SPECIFIC PAH (181)

Component	Benzopyrene (ppb)	Perylene (ppb)
Water	1.6	3.05
Plankton	7.3	2.7
Aquatic plants	376	71.6
Intertidal crustaceans	536	856
Fish - skin	0.5 - 4	1.7 - 5
- muscle	13.6 - 26	25 - 30
Littoral fringe grass	71.5	219
Terrestrial plant	trace	trace
Terrestrial crustacean	119	288

BIOLOGICAL IMPACTS

The information in this section addresses potential hazards and their influences. There are a number of materials including phenols, PAH, organosulfur compounds, organometallic compounds, and inorganic elements and compounds to which the plant personnel and the general population (both human and nonhuman) living in the vicinity of the plant will be exposed. What follows is a discussion of the health effects of some specific compounds to which such populations will be exposed. Unfortunately, little is known about the synergistic and antagonistic effects of materials in the complex mixtures

produced during the conversion processes. Also, very little is known about the long-term effects of low- or medium-level exposure to such materials and mixtures.

Medical surveillance and epidemiological studies will certainly be desirable. As long as coal conversion is in the pilot plant stage the number of exposed individuals will be too small to allow detection of any but the most obvious and ubiquitous effects. Heavy reliance should be placed on laboratory tests, in any case, to avoid unnecessary exposure of industrial personnel.

Effects of low levels of materials released during coal conversion and during the use of its products will be the principal concern for the general public. Concern will address acute and chronic effects, carcinogenicity, mutagenicity, and possibly teratogenicity. Major reliance must be placed on extrapolation from laboratory data to man. However, despite the difficulties imposed by the expected low levels of hazardous substances, epidemiological and clinical studies of groups of individuals, especially those located near coal conversion plants, may be of importance. This is particularly true because the complexity of the products, or the possible interactions between products, and the low level of the individual effects may make it difficult to really duplicate the situation in the laboratory. As for the industrial workers, the polycyclic hydrocarbons would appear to be at least one hazard of interest, but knowledge is too limited to be sure that other materials may not be even more hazardous to the general public.

Trace Elements

Rationale for Selection of Potentially Toxic Trace Elements--

In view of the fact that at least 65 of the natural elements have been found in coal, it would be fruitful to concentrate attention on those elements which will be found in toxic concentrations. Synergistic and antagonistic effects may make such an approach inadequate. Moreover, physical-chemical parameters play a very significant part in determining toxic effects in that these parameters determine the environmental location and concentration to which the animal will be exposed.

A technique called multimedia environmental goals (MEGs) is currently being developed by Cleland and Kingsbury (11). The MEGs are based on a very thorough literature search and represent concentrations which should not be environmentally harmful. Separate MEGs are derived for waste streams and environmental compartments (air, water, and soil). At the time of writing this report, the MEGs are not at a stage where they can be used to accomplish their purpose. Source Analysis Models (SAMs) are a series of techniques which utilize part of the MEGs, the Minimum Acute Toxicity Effluent (MATE) to identify waste streams and individual components of waste streams which are relatively more severe and may cause environmental damage (182). Part of the SAMs is called the Degree of Hazard (Health) and Degree of Hazard (Ecological). These values are simply the concentrations in the particular waste stream divided by the MATE based on health effects or the MATE based on ecological effects. For example, we know (from Table 111) that the concentration of aluminum in condensate from coal drying is 300 ppb. The MATE for aqueous effluent streams for aluminum based on health effects is 80,000 ppb, while the MATE based

on ecological effects is 1,000 ppb. Thus, the Degree of Hazard (Health) is 0.00375 and the Degree of Hazard (Ecological) is 0.3. These Degrees of Hazard are less than one, which indicates that the concentration in the waste stream is less than the MATE. Since the MATE is that MEG value which indicates the concentration in the waste stream which should not cause environmental harm, a Degree of Hazard of one or less indicates that this particular component is not likely to have a significant environmental effect, while a Degree of Hazard greater than one indicates that significant environmental effect is to be expected. The Degrees of Hazard for several trace elements in several effluent streams of coal liquefaction processes have been calculated and are shown in Table 111. Unfortunately, at the time of writing this report, not enough information was available to do a complete SAM/IA analysis (182). In the absence of available SAMs, the rationale for choosing those inorganics which may prove toxic is based upon very limited process data. In choosing those elements which have a potentially toxic effect in coal conversion facilities, the following data may be considered:

- Table 111 indicates the toxicity potential and potential for bioaccumulation of elements detected in process wastewater from a COED plant. The potential toxicity of elements in process streams was evaluated by dividing the observed concentration in effluents by the lowest concentration found in the literature to be toxic to freshwater biota regardless of species. Elements were classified as having low, medium, or high potential for biological impact if the ratio of effluent concentration to toxic concentration ranged between 1 to 10, 11 to 100, and >100, respectively. The potential

TABLE 111. TOXICITY POTENTIAL AND POTENTIAL FOR BIOACCUMULATION OF ELEMENTS IN PROCESS STREAMS

	COED process streams										
	Condensates from coal drying			Process water			H-Coal process water				
Reference	76	184	184	76	184	184	87	184	184	76	76
Element	Conc. (ppb)	Degree of hazard (health)	Degree of hazard (ecological)	Conc. (ppb)	Degree of hazard (health)	Degree of hazard (ecological)	Conc. (ppb)	Degree of hazard (health)	Degree of hazard (ecological)	Potential toxicity	Potential bioaccumulation
Aluminum	300	0.00375	0.3	3000	0.0375	3.0*	2500	0.03125	2.5	Medium	Medium
Arsenic	200	0.8	4.*	40.	0.16	0.8				Low	
Barium	1000	0.2	0.4	1000	0.2	0.4				Low	
Bismuth	< 2	$< 3.3 \times 10^{-4}$	--[a]	70	0.01						
Cadmium	< 3	< 0.06	< 0.3	10	0.2	1.0	800	16*	80.*		
Cobalt	< 5	< 0.007	< 0.02	500	0.7	2.0*	1400	1.9*	5.6*	Medium	Medium
Chromium	30	0.12	0.12	600	2.4*	2.4*	100	0.4	0.4	High	High
Copper	20	0.004	0.40	500	0.1	10.	400	0.08	8.*	Low	High
Iron	15000	---[a]	--[a]	790000	---[a]	---[a]	1.2	---[a]	---[a]	High	High
Germanium	5	5.9×10^{-4}	--[a]	10	0.001	---[a]					Low
Mercury	3	0.3	0.12	7	0.7	0.28	700	70*	2.8*	High	Medium
Magnesium	1000	0.01	0.01	50000	0.56	0.57	700	0.007	0.008	Low	Low
Manganese	3	0.012	0.03	15	0.06	0.15				Medium	High
Nickel	50	0.2	0.5	500	0.002	0.005	2520	11.*	25.*	High	High
Lead	3	0.012	0.06	1000	4.*	20.*	2900	12.	58.	High	High
Selenium	< 3	< 0.06	< 0.12	300	6.*	12.*					High
Tin	5	0.003	--[a]	100	0.07	---[a]					High
Titanium	50	5.6×10^{-4}	0.06	300	0.02	0.37	1000	0.01	1.2*		Medium
Zinc	200	0.008	2.*	5000	0.2	50*				High	High
Sum of degree of hazards		1.8	8.4		15.	100		110.	184.		

*This number is greater than 1 indicating possible environmental hazards.

[a]MATEs not available.

for bioaccumulation was evaluated by the method of Dawson (76). Hence, this represents a worst case situation (i.e., untreated, undiluted process water, and lowest toxic concentration). Comparative raw process water for an H-Coal PDU plant indicates that the process waste streams may not be comparable.

- Table 112 shows the solubility of metals as 10 percent solutions of a Lurgi ash and an H-Coal residue (81). Of approximately 60 chemical constituents measured in the raw Lurgi ash and H-Coal residue, about 31 were found to be present at concentrations that could present a potential hazard. The remainder were present at such low levels that, even if completely soluble, they would pose no particular problem. Of the 31 that were a potential problem, 16 were found to be in forms soluble enough to exceed recommended water quality levels in some samples at pH values between 3 and 8. These 16 constituents are listed in Table 112. Seven of the constituents--Al, Cr, Co, Cu, F, Fe, and Zn--exceeded the recommended levels in water only under certain pH conditions, generally when the pH was quite acid. The other nine constituents--B, Ca, Cd, K, Mn, NH_4, Pb, SO_4, and Sb--exceeded the recommended levels in all Lurgi ash solutions over the pH range 3 to 9. These nine constituents are thought to represent the highest potential pollution hazard. Discharges of the 16 constituents listed in Table 112 at the levels found in this study could cause some environmental degradation and require some form of wastewater treatment. A 10 percent ash concentration is far more concentrated than what would be observed, as has been shown

TABLE 112. ELEMENTS WHICH EXCEED RECOMMENDED WATER QUALITY LEVELS UTILIZING A TEN PERCENT SOLUTION OF LURGI ASH OR H-COAL RESIDUE (CONCENTRATIONS IN PPB) (81)

Element	LURGI ash solubility						H-Coal residue solubility						Recommended levels (concn)
	pH=3			pH=8			pH=3			pH=8			
	Concn.	Degree of hazard (Health)	Degree of hazard Ecological	Concn.	Degree of hazard (Health)	Degree of hazard Ecological	Concn.	Degree of hazard (Health)	Degree of hazard Ecological	Concn.	Degree of hazard (Health)	Degree of hazard Ecological	
Aluminum	13200	1.65*	132.*	500	0.00625	0.5	5500	0.069	5.5*	500	0.00675	0.5	100
Antimony	600	0.08	3.*	200	0.027	1.							
Boron	5500	0.12	0.22	4000	0.085	0.16	13600	0.29	0.54	13000	0.28	0.52	750
Calcium	570000	-[a]	-[a]	290000	-[a]	-[a]	497000	-[a]	-[a]	175000	-[a]	-[a]	50000
Cadmium	60	1.2*	6.0*	20	0.4	2.0*							10
Chromium	120	0.48	0.48	20	0.08	0.08							50
Cobalt	190	0.25	0.76	100	0.13	0.4							50
Copper	750	0.15	15.*	10	0.002	0.2							200
Fluoride							860	-[a]	-[a]	1150	-[a]	-[a]	1000
Iron	560000	-[a]	-[a]	60	-[a]	-[a]	31500	-[a]	-[a]	100	-[a]	-[a]	300
Potassium	26000	0.87	0.60	42000	1.4*	0.98							5000
Manganese	3800	15.2*	38.*	450	1.8*	4.5*	2680	10.7*	26.8*	40	0.16	0.4	50
Ammonia	11000	4.4*	220.*	17000	6.8*	340.*	8000	3.2*	160.*	6000	2.4*	120.*	20
Lead	200	0.8	4.*	100	0.4	2.*	250	1.	5.*	100	0.4	2.0*	30
Sulfate	338000	-[a]	-[a]	820000	-[a]	-[a]							250000
Zinc	17000	0.68	170*	120	0.0048	1.2*	270	0.0108	2.7*	10	0.0004	0.1	200
Sum Degree of Hazard		26.	590.		11.	350.		15.	200.		3.2	120.	

*These numbers are greater than 1 and, therefore, constitute an environmental hazard according to the SAM methodology.

[a]The MATEs for this element have not been determined, hence calculation of the Degree of Hazard using SAM methodology is not possible.

by the dilute discharges from ash ponds. Hence, this is, again, a worst case situation and is only a basis for choosing the potential hazardous compounds.

- Minimal information is available on those elements which volatilize from coal liquefaction facilities. On the basis of data from coal-fired steam and electric plants, bromine, iodine, gallium, mercury, selenium, and lead are thought to have significant gas phase components (83). Low concentrations of gallium and iodine in coal give these compounds a low pollution potential.

Effects--

Several adverse effects of various elements on animals and humans can be found in Tables 113 and 114. The data in Table 115 are taken from Talmage (146) and show threshold limit values and toxic effects of potential pollutants from coal conversion plants. The values are based upon accidental poisonings, occupational exposures, attempted suicides or epidemiological studies; hence, they are based on heterogenous populations in sometimes ill-defined situations.

The extrapolation of data such as these to the environment is complicated because the pollutants tend to interact. Also bioconcentration tends to expose the organism to a higher concentration than would be expected. The interaction of the various factors is difficult to predict.

The fact that the effects of trace elements are species-specific and can vary with environmental conditions make assessment of these effects on ecosystems difficult. This is complicated by the fact that laboratory-determined values

TABLE 113. ADVERSE EFFECTS OF ELEMENTS ON ANIMALS

Element	Reduces animal growth	Teratogenic	Cardiovascular pathology	Lesions of the brain and spinal cord	Hepatic lesions	Cumulative	Eye pathology	Carcinogenic potential	Adverse effect on reproduction	Cocarcinogenic potential	Pulmonary potential	Hypertension	Renal pathology	Skin pathology	Skeletal pathology	Dental pathology	Gastrointestinal pathology	Shortens life span	Weight loss	Blood pathology	Inhibition of enzyme systems	Greater percentage of protein/animal	ODT activity stimulated	Gill damage	Abnormal behavior	Mutagenicity	Skeletal muscle pathology	Reticuloendothelial system pathology	React with SH groups of proteins	Interferes with immunological systems	References
Antimony		-	+	+									+				+	+	+	+					+	+	+	+	+		76
Copper	+	+	+	+	+	-	+	+	+		+		+	+			+	+	+	+	+	+	-		±				+		76,162,148,183-194,147
Chromium								+	+	+	+		+						+	+		+	+			+					76,148,162,195-203
Lead	+	+	+	+		+		+	+		+		+		+				+	+	+	+	+		+	+					76,197,148,162,204-206
Beryllium	+				+			+	+		+		+		+			+	+	+											76,148,162,209-213
Arsenic		+	+	+	+		+		+				+		+		+		+			-	-		+		+		+		76,148,197,162,79,214-217
Cadmium	+	+	+	+	+			+	+	+	+	+	+	+	+	+	+	+	+	+	+	+	+	+	+	+			+	±	162,197,148,149,218-223
Cobalt								+											+			+	+			+					197,148,162,186
Iron								+		+									+			+	-			+					197,162
Nickel	+	+	+	+			+	+	+		+		+	+			±		+		+	+	-			+		±		+	197,148,76,162,178,224-237
Selenium		+		+	+	+		+	+		+		+	+	+	+	+		+	+	+				+		+	+	+	+	197,148,238-245
Thallium		+	+	+	+				+		+		+	+			+		+	+		±			±		+	+	±		246-258
Mercury		+	+	+		+			+		+		+				+		+			+	-		+	+			+		76,162,148,259-262
Zinc	+		+		+		+		+				+		+				+	+	+	+	+		+	+		+	+	+	148,79,162,263-266

TABLE 114. ADVERSE EFFECTS OF SEVERAL ORGANIC COMPOUNDS AND ELEMENTS ON HUMANS

Element	Functional nervous system abnormalities	Pathological blood changes	Carcinogenesis	Weight loss	Eye and respiratory tract irritation	Brain damage	Skin pathology	Renal pathology	Interferes with enzyme action	Pulmonary pathology	Hepatic pathology	Skeletal pathology	Gastrointestinal pathology	Dental pathology	Nausea	References
Benzene	+	+	+													267-277
Naphthalene		+	-													79,278-282
Isophorone					+											283-285
Ethylbenzene	+															79
Toluene	+					+										79,286,287
Antimony				+			+			+			+		+	79
Chromium			+[a]	+	+		+									76,197,146,198,199,288-290
Arsenic	+	+	+[a]		+		+		+	+	+		+		+	76,197,146,214,291-298,80
Beryllium	+	+	+	+	+		+			+	+	+	+			76,197,146,79,299-304
Cadmium	+	+	+	+		+	+	+	+	+	+	+	+			197,146,149,89,305-316
Cobalt			-													197
Iron			+													197
Nickel	+		+		+	+	+			+			+		+	197,146,76,178,317-320
Lead	+	+				+		+	+				+			148,321-322
Mercury	+	+						+	+				+	+	+	146,323-325
Vanadium					+											146
Selenium	+				+		+		+	+			+	+		146,326-327
Fluorine					+				+			+		+		146
Thallium	+					+		+		+	+		+		+	156,79
Zinc													+			79

[a]Not carcinogenic in laboratory animals, however.

TABLE 115. HUMAN TOXICITY AND THRESHOLD LIMIT VALUES OF SOME POTENTIAL POLLUTANTS FROM COAL CONVERSION PROCESSES (146)

Pollutant	Threshold limit values		Effects
	(ppm)	(mg/m^3)	
Elements			
Antimony		0.5	Dermatitis, keratitis, conjunctivitis, and nasal septum ulceration by contact fumes or dust
Arsenic		0.5	
Arsine	0.05	0.2	Dermatitis, bronchitis, skin cancer, gastrointestinal disturbances (arsenic); inhalation of arsine produces hemolysis; combines with sulfhydral enzymes and interferes with cellular metabolism; powerful poison by inhalation or ingestion
Barium		0.5	Skin and mucous membrane irritant; toxic by inhalation or ingestion; ingestion produces convulsions by changing cell membrane permeability, thus producing indiscriminate stimulation of all muscle cells
Beryllium		0.002	Highly toxic by inhalation; produces berylliosis, dermatitis, and conjunctivitis; suspected carcinogen
Boron oxide		10	Moderately toxic via ingestion, inhalation, and skin adsorption
Cadmium (dust and soluble salts)		0.2	
Cadmium oxide		0.05	Inhalation produces pulmonary emphysema hypertension, and kidney damage; ingestion produces gastrointestinal inflammation and liver and kidney damage; interferes with Zn and Cu metabolism; cadmium oxide — possible human carcinogen
Chromium			
Chromic acid, chromates		0.1	Dermatitis and ulceration of the skin and nasal sinuses; toxic by inhalation or ingestion; carcinogenic (incidence of lung cancer increased up to 15 times normal in workers exposed to dusty chromite, chromic oxide, and ores)
Cobalt (metal fume and dust)		0.1	Dermatitis; ingestion produces goiter
Copper (fume dusts and mists)		0.2	Skin and mucous membrane irritant; inhalation causes lung and gastrointestinal disturbances
Iron oxide fume		5	Contact fumes or inhalation produces conjunctivitis, choroiditis, retinitis, and siderosis
Pentacarbonyl		0.08	
Soluble salts		1	
Lead fumes and dusts		0.15	Cumulative poison, produces behavioral disorders, brain damage, convulsions, death

(continued)

TABLE 115. (continued)

Pollutant	Threshold limit values (ppm)	Threshold limit values (mg/m^3)	Effects
Manganese		5	Inhalation of dust or fumes produces a clearly characterized disease with progressive deterioration of the central nervous system
Mercury and mercuric compounds		0.01 - 0.1	Nephritis, gastrointestinal tract disturbances, nerve damage and death; depresses cellular enzymatic mechanisms by combining with (-SH) groups
Nickel (metal)		1	Dermatitis; probable nasal cavity and sinus carcinogen
Selenium (fumes and oxide fumes)		0.2	Gastrointestinal upset; respiratory tract and skin irritation; ingestion damages most organs (industrial "selenosis")
Tellurium fumes		0.1	Loss of appetite, garlic breath, liver
Thallium		0.1	Loss of hair, pains in extremities; route of uptake: ingestion or skin absorption
Tin			
Tin oxide		10	Inhalation produces benign pneumoconiosis
Organic compounds		0.1	
Inorganic compounds		2	
Vanadium (dust)		0.5	Conjunctiva and respiratory tract irritant
V_2O_5 fume		0.1	
Zinc oxide fume	5		Low toxicity; may cause dermatitis; respiratory tract irritant
Hydrocarbons			
Benzene	25	80	Inhalation produces dizziness, weakness, headache; large amounts cause central nervous system and bone marrow depression, fatty degeneration, and congestion of organs
Toluene	100	375	Produces slight bone marrow damage and central nervous system depression
Naphthalene	10	50	Dermatitis; eye irritant; hemolysis in susceptible individuals
Nitrogen and amino compounds			
Aniline	5	19	Most form methemoglobin and are skin and mucous membrane irritants; some produce kidney and liver damage and are central nervous system depressants
Toluidine	5	22	
Quinoline			
Benzidine			Skin sensitization; bladder tumors
β-Naphthamine			Bladder cancer

(continued)

TABLE 115. (continued)

Pollutant	Threshold limit values (ppm)	Threshold limit values (mg/m^3)	Effects
Phenol and derivatives Creosote Resorcinol Hydroquinone	Fatal doses depend on compound		Highly toxic by ingestion, inhalation or skin absorption; skin and mucous membrane irritants; poison to all cells directly by denaturing and precipitating cellular proteins
Gases			
Sulfur oxides			
Sulfur dioxide	5 (industrial exposure)	13	Combines with water to form corrosive acid; eye, skin, and mucous membrane irritant
Nitrogen oxides			
Nitric oxide	25	30	
Nitrogen dioxide	5	9	Corrosion and irritation of skin, eyes, digestive tract or lungs following ingestion or inhalation
Hydrogen sulfide	10	15	Irritant and anoxic effects; causes damage to the central nervous system; inhalation causes pulmonary edema
Carbon disulfide	20	60	Causes damage to the central nervous system, peripheral nerves and hemopoietic system; highly toxic by ingestion, inhalation, and skin absorption
Carbon dioxide	5000	9000	
Carbon monoxide	50	55	Inhalation produces tissue anoxia as a result of carboxyhemoglobin production
Carbonyl sulfide			Inhalation: decomposes to carbon dioxide and hydrogen sulfide
Mercaptans	20 - 250		Inhalation causes nausea and headache; high concentrations produce cyanosis and depression of cerebral function
Cyanides (HCN)	10	11	Increased respiration and cell paralysis; inhalation
(Salts)		5	produces lung congestion and dizziness; poisons by inhibiting cytochrome oxidase system for oxygen utilization in cells
Thiocyanates			Ingestion produces psychotic behavior and depressed cell metabolic activity
Hydrogen fluoride	3	2	Inhalation causes inflammation and necrosis of mucous membrane; skin contact produces severe burns
Fluorine	1	2	Acts as direct cellular poison by interfering with calcium metabolism and enzyme mechanisms
Hydrogen chloride	5	7	Forms corrosive acid; irritant and poison by inhalation and injection; irritant to mucous membrane of eyes and respiratory tract; produces pulmonary edema
Ammonia	25	18	Injures cells directly by alkaline caustic action; irritation of mucous membranes; highly irritant via inhalation or ingestion
Ozone	0.1	0.2	Pulmonary irritation and destruction from inhalation
Coal dust	Not established, respirable dust	2	Usually asymptomatic; produces pneumoconiosis and silicosis

for toxicity (for example, LC_{50}, LD_{50}, TLm) do not necessarily reflect the relative pollution potential of compounds. For example, the data of Wilkens (148) on the toxicity of several elements to Daphnia magua fit the following equations:

$$Y_{50\%} = 0.689 \times (-1865) \qquad r = 0.99961 \qquad p = < 0.001$$

and

$$Y_{16}\% = 0.456 \times (-1948) \qquad r = 0.99818 \qquad p = < 0.001$$

where: Y = level causing 50% or 16% reproductive impairment
x = LC_{50} of the individual metals
r = Pearson's product movement correlation
p = The chance that the observed correlation is due solely to chance.

This indicates that the LC_{50} is very useful in predicting the relative pollution potential of these 19 elements. However, the data of Katz (149) on LC_{50} and concentrations that impaired conditioned avoidance response showed, for arsenic, lead, mercury, and selenium on goldfish, no correlation with a linear equation (r = -0.426), a power curve (r = +0.460), an exponential curve (r = -0.033), or a logarithmic curve (r = +0.192). This indicates that the LC_{50} is useless in predicting the relative effect of these elements on this environmentally significant phenomenon.

Toxicity Levels--

The approximate toxicity of the trace elements is found in Table 116. In this table, "very toxic" indicates that the toxic effects are seen at concentrations below 1 ppm in nutrient solution of plants or microorganisms or water for

TABLE 116. GENERAL TOXIC EFFECTS OF ELEMENTS TO PLANTS, ANIMALS, AND MICROORGANISMS

Element	Plant toxicity	Animal toxicity	Microorganism toxicity	References
Aluminum (Al)	moderately to most plants	slightly		76,88
Antimony (Sb)	moderately	moderately very as hydride	moderately	76,79
Argon (Ar)	not	not		76
Arsenic (As)	moderately	highly, esp. AsH_3 to moderately, carcinogenic, teratogenic	moderately	76,79
Barium (Ba)	moderately	slightly		76
Beryllium (Be)	very to moderately	very - carcinogenic	very to moderately	76,79,162
Bismuth (Bi)	moderately	moderately in soluble form		76
Boron (B)	very to moderately	slightly	very to slightly	76,88,153,328
Bromine (Br)	Br_2: very Br^-: relatively harmless BrO_x: moderately	Br_2: very Br^-: relatively harmless, very as hydride	Br_2: very Br^-: relatively harmless	76
Cadmium (Cd)	very to moderately	very to moderately, cumulative in mammals very in fish and Daphnia magna	very to moderately	76,79,162
Calcium (Ca)	relatively harmless	relatively harmless	relatively harmless	76
Cesium (Cs)	relatively harmless	relatively harmless	relatively harmless	76

(continued)

TABLE 116. (continued)

Element	Plant toxicity	Animal toxicity	Microorganism toxicity	References
Chlorine (Cl)	relatively harmless as Cl^-, moderately to highly toxic as Cl_2, ClO^- or ClO_3^-	see plants Hydride: very	see plants	76
Chromium (Cr)	Cr(III): moderately Cr(IV): highly CR(VI): moderately	Cr(III): moderate to very; Cr(IV): very, carcinogenic; Cr(VI): very to moderately	very	76,79,84
Cobalt (Co)	very			76
Copper (Cu)	very to moderately	invertebrates: very to slightly; fish: very; mammals: slightly to moderately; tadpoles: very	very to slightly	76,84,328, 79,162,148
Fluorine (F)	moderately	very to moderately	moderately	76
Germanium (Ge)	slightly	slightly except as GeH_4 which is highly toxic in mammals		76
Hafnium (Hf)	slightly	slightly	slightly	76
Helium (He)	harmless	harmless	harmless	76
Iodine (I)	slightly	slightly very toxic as hydride		76,162
Iron (Fe)	moderately to slightly	slightly	slightly	76
Lanthanium (La)	slightly	slightly	slightly	76
Lead (Pb)	very - moderately	very to moderately, cumulative in mammals	very to slightly	76,79,328, 162,148

(continued)

TABLE 116. (continued)

Element	Plant toxicity	Animal toxicity	Microorganism toxicity	References
Lithium (Li)	slightly	slightly,teratogenic	slightly	76,77
Magnesium (Mg)	relatively harmless	relatively harmless	relatively harmless	76
Manganese (Mn)	moderately	moderately	moderately	76
Mercury (Hg)	very	very to moderately, cumulative	very	76,79,328
Molybdenum (Mo)	moderately to relatively harmless	moderately to slightly	moderately	76,162
Neodymium (Nd)	scarcely	scarcely	scarcely	76
Nickel (Ni)	very to moderately	invertebrates: very; fish: moderately to very mammals: moderately but $Ni(CO)_4$ is highly toxic and possibly carcinogenic	very to moderately	76,79,234, 329,154
Phosphorus (P)	phosphates are relatively harmless	white P_4 and PH_3 are highly toxic to mammals; phosphates are relatively harmless	phosphates are relatively harmless	76
Polonium (Po)		highly		76
Potassium (K)	relatively harmless	relatively harmless	relatively harmless	76
Praseodymium (Pr)	slightly	slightly	slightly	76
Radium (Ra)		the high toxicity to mammals is probably due to the radioactivity		76

(continued)

TABLE 116. (continued)

Element	Plant toxicity	Animal toxicity	Microorganism toxicity	References
Radon (Rn)		the high toxicity to mammals is probably due to the radioactivity		76
Rubidium (Rb)	scarcely toxic in the presence of K	see plants oxides: very	see plants	76
Samarium (Sm)	slightly			76
Scandium (Sc)	slightly	slightly	slightly	76
Selenium (Se)	moderately	very to moderately		76,148
Silicon (Si)	slightly	slightly, but large amounts in mammalian lung are harmful	slightly	76
Silver (Ag)	very to moderately	very	very to moderately	79,76,162
Sodium (Na)	relatively harmless	relatively harmless	relatively harmless	76
Strontium (Sr)	slightly	slightly		76
Tantalum (Ta)	slightly	slightly	slightly	76
Tellurium (Te)	moderately	very		76
Thallium (Tl)	moderately	very to moderately, cumulative	moderately	76,79,148
Thorium (Th)	slightly	slightly	slightly	76
Tin (Sn)	very	very as SnH_4		76
Titanium (Ti)	relatively harmless	relatively harmless	relatively harmless	76
Tungsten (W)	moderately	slightly		76

(continued)

TABLE 116. (continued)

Element	Plant toxicity	Animal toxicity	Microorganism toxicity	References
Uranium (U)	moderately	moderately	moderately	76
Vanadium (V)	moderately	moderately	moderately	76
Ytterbium (Yb)	slightly	slightly	slightly	76
Yttrium (Y)	slightly	slightly	slightly	76
Zinc (Zn)	moderately	fish: very to slightly; non-aquatic organisms: slightly	very to slightly	76,79,328, 162
Zirconium (Zr)	moderately	slightly		76

aquatic animals, and the dietary LD_{50} of animals occurs in the 1 to 10 mg/kg body weight. "Moderately toxic" indicates that the toxic effects appear at levels of 1 to 100 ppm in nutrient solutions for plants or microorganisms or water for aquatic animals or the LD_{50} for animals lies in the 10 to 100 mg/kg range. "Slightly toxic" indicates that toxicity is rarely seen in plants or microorganisms or aquatic animals, and the LD_{50} for animals occurs at a dietary level of 100 to 1000 mg/kg body weight. "Relatively harmless" indicates that the LD_{50} for animals is greater than 1000 mg/kg. More specific information is available in the references indicated. The toxicity refers to the toxicity of the element in a biological rather than a radiological sense, unless specified otherwise.

Obviously, elements or their compounds which are listed as "very toxic" in Table 117 should have very stringent guidelines. This should be reflected in the MEGs of these compounds. Analysis of the MEG methodology can be used to estimate the value of the MEG called the "Maximum Acute Toxicity Effluent" (MATE) and the value of the MEG called the "ambient level goal." Elements or their compounds listed as "moderately toxic" will probably eventually have an emission MATE greater than 4.5 $\mu g/m^3$, an effluent MATE greater than 67.5 $\mu g/m^3$, and a MATE for land-destined wastes greater than 0.135 ppm. The ambient level goal for those elements and their compounds listed as "moderately toxic" for air probably will be greater than 0.011 $\mu g/m^3$, for water greater than 0.16 ppb, and for soil greater than 0.0003 ppm. Elements and their compounds listed as "slightly toxic" will probably have emission MATEs greater than 45 $\mu g/m^3$, effluent MATEs greater than 675 ppb, and MATEs for land-destined wastes greater than 1.35 ppm. The ambient level goals for those elements and compounds listed as "slightly toxic" for air will probably be greater than 0.11

TABLE 117. STANDARDS AND ACCEPTABLE LEVELS OF TRACE ELEMENTS

Name	Drinking water standard (mg/l)	Standard as critical concentration in potable water (mg/l)	Maximum acceptable concentration for livestock drinking water (mg/l)	Estimated permissible concentration Air (mg/m^3)	Estimated permissible concentration Water (mg/l)	Acceptable level freshwater "critical concentration" (mg/l)	Acceptable level marine water "critical concentration" (mg/l)	Derived freshwater standards EPA proposed basis (mg/l)	Derived marine standards EPA proposed basis (mg/l)
Aluminum	0.01								
Antimony	0.05	0.05		1.2	0.007	0.20	0.003		0.04
Arsenic	0.05	0.01	0.2	0.005	0.05	0.02	0.002		0.002
Barium	1.0			1.	1.0				
Beryllium	1.0	1.0		0.01	0.004	0.100	0.02		0.01
Bismuth	0.1	0.1					0.002		
Boron	1.0			7.4	0.043				
Bromine	3.0								
Cadmium	0.01	0.01	0.05	0.12	0.010	0.00001	0.0004	0.0004-0.003[a]	0.0003
Chromium	0.05	0.02	1	0.12	0.05	0.005	0.00006	0.003	0.05
Cobalt	0.05	0.05	1	0.12	0.0007	0.100	0.003		
Copper	0.1	0.01	0.5			0.02	0.001	0.0005	0.001
Germanium	0.5	0.5		0.5	1.				
Lead	0.05	0.01	0.1	0.36	0.05	0.01	0.005	0.01	0.01
Magnesium	10			14	0.083				
Manganese	0.05	0.01		12	0.05	0.01	0.002		0.1
Mercury	0.002	0.002	0.001	1.3	0.0008	0.001	0.00005	0.0002	0.0002
Molybdenum	0.5	0.5		12	0.07	0.01	0.13		0.005
Nickel	0.05	0.05		0.24	0.0014	0.005	0.001	0.008	0.001
Radium		0.001							
Rubidium	5								
Selenium	0.01	0.01	0.05	0.5	0.01	0.001	0.002		0.0001
Silver		0.001		0.024	0.05	0.001	0.005		0.0005
Strontium				5.5	0.027				

[a] Soft water value - hard water value

(continued)

TABLE 117. (continued)

Name	Drinking water standard (mg/l)	Standard as critical concentration in potable water (mg/l)	Maximum acceptable concentration for livestock drinking water (mg/l)	Estimated permissible concentration		Acceptable level freshwater "critical concentration" (mg/l)	Acceptable level marine water "critical concentration" (mg/l)	Derived freshwater standards EPA proposed basis (mg/l)	Derived marine standards EPA proposed basis (mg/l)
				Air (mg/m^3)	Water (mg/l)				
Thallium		0.005				0.01	0.0001		0.005
Thorium		0.0005				0.01			
Tin	0.05	0.05							
Titanium	0.1			14	0.083				
Tungsten	100	100							
Uranium	0.5								
Vanadium	0.1	0.1	0.1	1.2	0.007	0.05	0.01		0.025
Zinc	5	0.05	25	9.5	5				
Zirconium	1								
Reference	149	78	78	330		78			

$\mu g/m^3$, for water probably greater than 1.6 ppb, and for land probably greater than 0.003 ppm. The emission MATEs for elements and their compounds listed as "relatively harmless" will probably be greater than 450 $\mu g/m^3$. The effluent MATEs will probably be greater than 6,750 ppb, and the MATEs for land-destined wastes will probably be greater than 13.5 ppm. The ambient level goals for those elements and their compounds listed as "relatively harmless" will probably be greater than 1.1 $\mu g/m^3$ for air, 160 ppb for water, and 0.03 ppm for land. Until more specific information is available, these numbers can be used as the basis for developing standards. When the actual MEGs are prepared, they will probably indicate that less stringent standards will be satisfactory. While Table 116 presents the range of toxicity levels for animals, plants, and microorganisms, Table 115 lists the threshold limit values on humans for several compounds likely to be present in coal conversion processes. It is obviously impossible on the basis of available data to determine the dietary intake of trace elements, or the contribution of liquefaction processes to these intakes.

Table 117 lists standards and acceptable levels of numerous trace elements found in liquefaction waste streams. Such standards need to be compared with discharges and runoff from treated wastes at various points distant from the source. Only then can we accurately assess the pollution potential from trace elements.

The toxicity data in Table 116 fails to take into account antagonistic or synergistic action between pairs of trace elements. Table 118 lists the reduction of toxic effects of one trace element by another. The problem of synergistic and antagonistic effects has been partly rectified by use of gross effluent components of effluent streams such as fly ash

TABLE 118. REDUCTION OF TOXIC EFFECTS OF ONE TRACE ELEMENT BY ANOTHER

Common Name	Scientific Name		Reference
Microbe	*Vibrio cholerae Ogawa*	Magnesium restored nickel inhibited acid production and glucose utilization	331
Plants		Nickel interferes with plant absorption of iron and sufficient iron reduces the phytotoxicity of nickel	77
		Selenium reduces the toxicity of cadmium and mercury	103
Rat	*Rattus sp.*	Copper addition overcomes zinc induced anemia and reduction of liver catalyse and cytochrome oxidase	79
Rat	*Rattus sp.*	Calcium and phosphorous overcome zinc's antagonistic effect on the deposition of calcium and phosphorous in bone	79
Freshwater algae	*Chlorella*	Toxicity of Ni eliminated by Na_2EDTA and reduced by zinc	332
Oats	*Avena saliva*	Both root and shoot weights were restored when the plants were exposed to nickel in the presence of magnesium or calcium	333
Freshwater algae	*Anacystis nidulans* *Anabaena variabilis* *Anabena doliolum*	In all three species, algae grown in media containing sulfur were less prone to the toxic effects	
Chicks		Addition of dietary copper or silver (1000 ppm) counteracted the toxic effects of 40 ppm dietary selenium	334
		Selenium to 5 ppm in diet has mildly protective action against toxic effects of lead.	335
Rats		Selenium and mercury are mutually antagonistic.	336
Hamsters		Sodium selenate reduces teratogenicity of injected cadmium if injected within 1/2 hour (both compounds at 2 ppm in mother. Sodium selenate not teratogenic at this concentration.)	244

or mine drainage waters. These studies lack the more carefully controlled studies of a single pollutant but may be more environmentally significant.

Organic Compounds

Organic compounds may affect organisms in a variety of ways and to different degrees. The hazard presented by such compounds may take such forms as subacute toxicity, acute toxicity, chronic toxicity, carcinogenicity, mutagenicity and teratogenicity. Some of these adverse effects are listed in Table 119 for selected compounds potentially emitted by liquefaction process plants. A plus sign (+) means the effect is observed. A minus sign (-) means the effect is not observed. Blank spaces are left when information is not available so that the reader can fill in the blanks as information becomes available.

Toxicity--The toxicity of coal liquefaction wastes and product oils is an important concern in determining the environmental impact of various liquefaction processes. Table 120 lists the toxic effects of various organic compounds to the "most sensitive organisms" found during a relatively thorough literature search. These acute toxicities cannot be used absolutely to predict chronic effects, partially because the toxicities themselves are functions of numerous variables but mainly because chronic effects usually occur at levels far below the level exhibiting the acute toxicity. The chronic effects may not even be accurately predicted by the acute effects, as is illustrated in Table 121. A most noteworthy case is the carcinogenic polynuclear aromatic compounds which have a low acute toxicity but a high carcinogenicity potential (83). In addition, acute toxicity tests

TABLE 119. ADVERSE EFFECTS FOR SELECTED ORGANIC COMPOUNDS POTENTIALLY EMITTED BY LIQUEFACTION PLANTS (79,146)

Compound	Acute toxic effect	Carcinogen	Reticuloendothelial system pathology	Gastrointestinal pathology	Reproductive system pathology	Hepatic pathology	Renal pathology	Respiratory system pathology	Hormonal pathology	Cocarcinogen	Mutagen
7, 12-Dimethylbenzo [a]anthracene	+	+++	+	+	+						+++
Benzo[a]pyrene	±	+									-or+
3-methylcholanthrene	±	+	+			+	+	+	+		-
Anthracene	-										
Dibenzo[a,h]anthracene		+									
n-dodecane		-								+	
Dodecylbenzene		-								+	
Decahydronaphthalene										-	
1-dodecanol										+	
1-phenyldodecane										+	
Phenols										+	
Formaldehyde										-	
Furfural										+	
Benzo[e]pyrene		-									-
3-hydroxybenzo[a]pyrene		-									±
Dibenzo[a,c]anthracene		-									-
Dibenzo[a,h]anthracene		±									±
B-naphthylamine		+									
Isophorone			+				+				
Benzene		+	+								
Ethylbenzene											
Acenaphthene							+				

Blank space = nothing found in available literature, reader can add information as it becomes available
+ = compound exhibits this characteristic
+++ = compound exhibits very potent effects of this characteristic
- = compound does not exhibit this characteristic

This table is designed to list the concentrations at which the biological effects have been observed with the most sensitive organisms studied. It does not indicate safe concentrations for these compounds since more subtle effects may not have been observed as yet nor does it attempt to list synergistic effects. This table does indicate concentrations which will definitely alter the environment.

This type of information will be used to help determine the MEGs and will be incorporated in the MEGs when they become available.

TABLE 120. MOST SENSITIVE ORGANISMS TO VARIOUS ORGANIC CHEMICALS (79)

Most Sensitive Marine or Estuarian Microorganisms
Acenaphthene: The red algae, *Antithamnion plumula*, showed a 3 percent growth inhibition in the sporelings at levels of 0.03 ppm (1.9×10^{-6} molal) (337).
Anthracene: The red algae, *Antithamnion plumula*, showed inhibition of growth by 20 percent when exposed to levels of 300 ppm (1.7×10^{-3} molal) (337).
Benzene: The algae, *Amphidinum carterae*, were inhibited by 0.001 ppm (1.3×10^{-8} molal) (338).
Chrysene: The red algae, *Antithamnion plumula*, showed stimulation of growth by 58 percent when exposed to 0.300 ppm (1.3×10^{-6} molal) (79).
Naphthalene: The bacteria, *Vibrio parahaemolyticus*, suffered 42 percent growth reduction at 5.8 ppm (4.5×10^{-5} molal) (339).
Toluene: The phytoplankton, *Skeletonema costatum* and *Cricosphaera carterae*, showed reduced growth at 20 ppm (2.2×10^{-4} molal) (340).

(continued)

TABLE 120. (continued)

Most Sensitive Freshwater Microorganisms

Benzene: The green algae, *Chlorella vulgaris*, showed inhibited growth at 25 ppm (3.2×10^{-4} molal) (341).

Naphthalene: The green flagellate, *Chylamydomonas angulosa*, lost photosynthetic capacity when exposed to more than 0.010 ppm (7.8×10^{-8} molal) (342).

Phenol: The green algae, *Chlorella vulgaris*, showed growth inhibition when exposed 0.01 ppm (1.1×10^{-7} molal) (343).

Most Sensitive Nonaquatic Microorganisms

Acenapthene: *Sordaria fimicola*, *Coniophora puteana*, and *Aspergillus kanagawaensis* all showed 100 percent inhibition of increase in colony diameter or cell number at 80,000 $\pm$ 20,000 ppm (0.52 [0.39-0.65] molal) (344).

3,4-Benzopyrene: The ciliate, *Tetrahymena pyriformis*, suffered complete clearing of colonies at 0.010 ppm (4.0×10^{-4} molal) (345).

Fluoranthene: The ciliate, *Tetrahymena pyriformis*, exhibited a medium inhibition at 0.100 (4.9×10^{-7} molal) and complete clearing at 0.200 ppm (9.9×10^{-7} molal) (346).

Isophorone: *Cryptococcus neoformans* suffered complete growth inhibition at 0.0025 ppm (1.8×10^{-8} moles/kg agar) (347).

Toluene: The bacteria, *Escherichia coli*, suffered decreased viability at 1.3 ppm (1.4×10^{-5} molal) (348).

(continued)

TABLE 120. (continued)

Most Sensitive Plants

Ethylene: Exposure of tomatoes and pepper plants, orchids and carnations to 0.1 ppm (3.6×10^{-6} moles/air) for a few hours affected flowers and caused epinasty and leaf abscission (349).

PAN ($CH_3[CO]O_2NO_2$): Exposure of spinach, romaine lettuce, and certain flowers to 0.03 ppm (2.5×10^{-7} moles/kg air) produced bronzing of the lower leaf surface (with the upper surface normal) and supressed growth. The younger leaves appeared more susceptible (349).

pH: The rooted macrophyte, *Lobelia dormanna*, when grown at pH 4.0 showed reduction of growth and oxygen production reduced 75 percent and the flowering period was delayed 10 days when compared to controls grown at pH = 4.3-5.5 (350).

Toluene: Tomatoes were irreversibly damaged by exposure to vapor containing 12 ppm (1.3×10^{-4} moles/kg vapor) for 15 minutes (351).

Most Sensitive Marine or Estuarian Invertebrates

Benzene: The marine grass shrimp, *Palaemonetes pugio*, showed a 96-hour LC_{50} of 27 ppm (3.5×10^{-4} molal) (352).

Isophorone: The brine shrimp, *Artemia salina*, showed a 24-hour TL_m of 430 ppm (3.1×10^{-3} molal) (353).

Phenol: The tidal pool copepod, *Tigriopus californicus*, showed a 48-hour LC_{40} of 0.5 ppm (5.3×10^{-6} molal) (354).

Toluene: The marine grass shrimp, *Palaemonetes pugio*, showed a 96-hour LC_{50} of 9.5 ppm (1.0×10^{-4} molal) (355).

(continued)

TABLE 120. (continued)

Most Sensitive Freshwater Invertebrates

Acridine: Water fleas, *Daphnia pulex*, showed a 24-hour LC_{50} of 4.8 ppm (2.7×10^{-5} molal) (79).

Benz(a)acridine: Water fleas, *Daphnia pulex*, showed a 24-hour LC_{50} of 0.4 ppm (1.7×10^{-6} molal) (79).

Benzene: The newt, *Molge vulgaris*, showed mitotic changes when exposed to 0.135 mg/g (1.73×10^{-3} moles/kg) (356).

Naphthalene: The brown shrimp, *Penaeus aztecus*, showed a 24-hour LC_{50} of 2.5 ppm (2.0×10^{-5} molal) (357,298).

pH: The amphipod, *Gammarus lacustris*, an important element in the diet of trout in Norwegian lakes where it occurs, is not found in lakes with pH less than 6.0. Experimental investigations have shown that the adults of this species cannot tolerate 24-48 hours of exposure to pH 5.0 (350).

Phenol: The freshwater snail, *Helisoma tuvolis*, showed inhibited oxygen consumption at 2 ppm (2.1×10^{-5} molal) (358).

Most Sensitive Marine Or Estuarine Fish

Benzene: The striped bass, *Monorone saxatilis*, showed a 96-hour LC_{50} of 0.0096 ppm (1.2×10^{-7} molal) and decreases in weight and percent fat 0.0031 ppm (3.9×10^{-8} molal) (359).

Naphthalene: Fingerling silver salmon were exposed to 3.2 ppm (2.5×10^{-5} molal). They showed a LT_{50} of less than 9.25 hours and a LT_{100} of less than 20.75 hours (360).

(continued)

TABLE 120. (continued)

Phenol: The anchlorie, *Stolephorus purpurenus*, showed a 12-hour TL_m of 0.51 ppm (5.4×10^{-6} molal) (361).

Most Sensitive Freshwater Fish

Benz(a)anthracene: Bluegills, *Lepomis macrochirus*, were exposed to 1 ppm (4.4×10^{-6} molal) for a period of 6 months. Eighty-seven percent of the animals died (79).

Benzene: The bluegill, *Lepomis macrochirus*, showed a 96-hour TL_m of 22.5 (95 percent confidence interval: 17.5-28.4) ppm [$2.9(2.2\text{-}3.6) \times 10^{-4}$ molal] (362).

Benzidine: The fathead minnow, *Pimephales promelas*, showed a 96-hour TL_m of 2 ppm (1.1×10^{-5} molal) (79).

Ethylbenzene: The bluegill, *Lepomis macrochirus*, showed a 96-hour TL_m of 32 ppm (3.0×10^{-4} molal) (211).

Naphthalene: The sheepshead minnow, *Cyprinodon variegatus*, showed a 96-hour LC_{50} of 2.4 ppm (1.9×10^{-5} molal) (357).

pH: The smallmouth bass, *Micropterus dolomieui*, walleye, *Stizostedion vitreum*, and burbot, *Lota lota*, stopped reproduction in the pH range of 6.0+ to 5.5 in acidic lakes of the La Cloche Mountains near Sudbury, Ontario. If the smallmouth bass and walleye are considered desired species, then the pH must be greater than 6 (363).

Phenol: The rainbow trout, *Salmo gairdnerii*, showed a 48-hour LC_{50} of 7.5 ppm (8.0×10^{-5} molal) in hard water (290 ppm $CaCO_3$) (79).

Toluene: The goldfish, *Carassius auratus*, showed a 96-hour LC_{50} of 22.8 (95 percent confidence interval: 17.0-30.0) ppm ($2.5[1.8\text{-}3.3] \times 10^{-4}$ molal) and a 720-hour LC_{50} of 14.6 (10.7-20.0) ppm ($1.6[1.2\text{-}2.2] \times 10^{-4}$ molal) (330).

(continued)

TABLE 120. (continued)

Most Sensitive Amphibians

Polynuclear Aromatic Hydrocarbons: Frogs, *Rana pipiens*, developed renal neoplasms after exposure to 0.3-0.5 mg (1.1-1.8x10^{-6} moles) of 1,2,5,6-dibenzanthracene (DMBA) while the same concentration of 3,4-benzpyrene (BP), 5,7-dimethyl-1, 2-benzacridine or 3-methylcholanthrene (3MC) was lethal to all treated frogs within 5 days. DMBA was more effective than 3MC or BP in producing supernumerary fins and notochords in *Bufo arenarum* tadpoles following chemical implantation (148).

Most Sensitive Bird

Carbon monoxide: Chickens showed reduced hatching when exposed to 425 ppm (0.015 moles/kg air) (117).

Most Sensitive Nonhuman Mammals

Acenapthalene: Mice, *Mus* sp., showed an oral LD_{50} of 2.1 g/kg (1.4x10^{-2} moles/kg) (364), and rats, *Rattus* sp., showed an i.p. LD_{50} of 600 $\pm$ 60 ppm (3.9[3.5-4.3]x10^{-3} moles/kg) (365).

Benzene: Laboratory Sprague-Dawley rats, *Rattus* sp., showed significant decreases in white blood cell count when subjected to the following combination of conditions:

65 ppm (8.3x10^{-4} moles/kg air) for 26 out of 39 days

47 ppm (6.0x10^{-4} moles/kg air) 180 out of 240 days for 7 hours/day.

No change in the white blood cell count was observed at 31 ppm (4.0x10^{-4} moles/kg air) for 7 hours/day 90 out of 126 days. Abnormalities of the lungs and spleen were noted (366).

Laboratory Osborne-Mendel rats, *Rattus* sp., showed an oral LD_{50} of 4080 (95 percent confidence interval: 3260-5100) ppm (5.2[4.2-6.5]x10^{-2} moles/kg) (367,368).

(continued)

TABLE 120. (continued)

Benzidine: In Sprague-Dawley rats, *Rattus* sp., 12 mg/rat (6.5×10^{-5} moles/rat) is carcinogenic (369).

Benzopyrene: Rats, *Rattus* sp., showed a significant increase in the number of resorbed or malformed fetuses when exposed to oral or subcutaneous administration of 1-5 mg ($0.4-2.0 \times 10^{-5}$ moles) of benzopyrene (79).

Carbon monoxide: Rats, *Rattus* sp., showed a decreased ability of the liver to metabolize 3-OH benzon-alpha-pyrene when exposed to 60 ppm (2.1×10^{-3} moles/kg air) carbon monoxide (117).

Pregnant rabbits, *Sylvilagus* sp., were exposed to 90 ppm (3.2×10^{-3} moles/kg air) for 30 days. Exposure during first pregnancy resulted in carbonmonoxyhemoglobin concentrations of 9 to 10 percent. Birth weight decreased 12 percent. Neonatal mortality increased from 4.5 percent in controls to 10 percent in exposed. Mortality during the following 21 days increased from 13 to 25 percent (117).

Carbonmonoxyhemoglobin levels as low as 2 percent in animals decreased the pO_2 of brain and liver (117).

1,2,5,6-Dibenzanthracene: Mice, *Mus* sp., showed 30 tumors in 67 animals when exposed to 30 to 40 micrograms ($1.1-1.4 \times 10^{-7}$ moles)/mouse (79).

Ethylbenzene: Rats, *Rattus* sp., showed toxic effects in the kidney and liver when exposed to repeated 7-hour inhalation exposure to 400 ppm (3.8×10^{-3} moles/kg air) over a period of 144 to 214 days (370).

Fluoranthene: Carworth-Wistar rats, *Rattus* sp., showed a 14-day oral LD_{50} of 2.0 mg/kg (9.9×10^{-6} moles/kg) (371).

Fly ash: Guinea pigs showed inflammatory lesions in the terminal bronchioles of the lung which were characterized as moderate hyperplasia of the epithelium when exposed to combination of fly ash (0.55 micrograms/cubic meter) and sulfuric acid aerosol (117).

(continued)

TABLE 120. (continued)

Gasoline: Mice, *Mus* sp., showed a significantly greater (p less than 0.05) incidence of lung tumors when exposed to 24-30 ppm unleaded gasoline in air (117).

Hydroquinone: ICR-JCL mice, *Mus* sp., showed a 6-day LD_{50} of 190 mg/kg(1.7×10^{-3} moles/kg) (79).

Hydroxyhydroquinone: ICR-JCL mice, *Mus* sp., showed a 6-day LD_{50} of 122 ppm (9.7×10^{-4} moles/kg) (79).

Isophorone: The laboratory rat, *Rattus* sp., showed a 14-day LD_{50} of 1.87 g/kg (0.014 moles/kg). Inhalation of 880 ppm (6.4×10^{-3} mole/kg air) for one hour caused serious organ damage. Rats died as a result of a 4-hour exposure to 1840 ppm (0.013 mole/kg air) but not at lower concentrations. Rabbits, *Sylvilagus* sp., showed a cutaneous LD_{50} of 1.50 mg/kg (1.1×10^{-5} moles/kg) (283,372).

Naphthalene: Rats, *Rattus* sp., showed an oral LD_{50} of 9.43 mg/kg (7.4×10^{-5} moles/kg) (373).

N-nitroso compounds: Repeated doses of 2×10^{-4} moles/kg body weight (circa 10 ppm for N-nitrosodimethylamine) have induced a high incidence of tumors in rodents within their lifetimes (79).

Phenol: ICR-JCL mice, *Mus* sp., showed a 6-day LD_{50} of 344 ppm (3.7×10^{-3} moles/kg) (79).

Potassium phenylsulfate: ICR-JCL mice, *Mus* sp., showed a 6-day LD_{50} of 1890 ppm (8.9×10^{-3} moles/kg) (79).

Pyrocatecol: ICR-JCL mice, *Mus* sp., showed a 6-day LD_{50} of 247 ppm (2.2×10^{-3} moles/kg) (79).

Sulfuric acid: Mice, *Mus* sp., showed a reduced physical clearance of radio-labelled streptococcus particles deposited in the nose and lungs when exposed to a concentration of 15 micrograms/cubic meter (3.7×10^{-3} ppm, 3.8×10^{-8} moles/kg air) (117).

(continued)

TABLE 120. (continued)

Toluene: Mice, *Mus* sp., showed decreased wheel turning activity after exposure to 1 ppm ($1.1x10^{-5}$ moles/kg air) (374), and Sprague-Dawley rats, *Rattus* sp., showed an LD_{50} of 9.43 ppm ($7.4x10^{-5}$ moles/kg) (178).

Humans, Homo Sapiens

Particulates: Increased mortality was demonstrated from chronic respiratory diseases and all causes when exposed to an average concentration of 100 micrograms/cubic meter for 2 years. In addition, exposure to 80 to 100 micrograms/cubic meter for 24 hours aggravated cardio-respiratory symptoms in healthy persons and in elderly patients with heart and lung disease as well as increasing asthma attacks in people with that application. Best judgement estimates of the threshold levels for increases in acute lower respiratory tract infections in children were 3 years of exposure to 102 micrograms/cubic meter (117).

Benzene: An increase in incidence of Hodgkin's Disease was shown after occupational exposure to 150-210 ppm (1.9-2.7 $x10^{-3}$ moles/kg air) for 1-28 years (117). Leukemia was also associated with occupational exposure to benzene over a 10-year period (117). Inhalation of 250-500 ppm ($3.2-6.4x10^{-3}$ moles/kg air) induced signs and symptoms of mild poisoning characterized by vertigo, drowsiness, headache, and nausea (375).

Ethylbenzene: One thousand ppm ($9.4x10^{-3}$ moles/kg vapor) induced transitory eye and respiratory tract irritation. Vertigo and dizziness developed at a level of 2000 ppm ($1.9x10^{-3}$ moles/kg air) (117).

are usually run on pure compounds precluding observation of possible synergistic effects. However, when lacking information on chronic effects, Table 120 can be used to indicate the level of compound for which an adverse environmental effect can definitely be expected.

TABLE 121. SUMMARY OF ENVIRONMENTAL INFORMATION ON CLASSES OF ORGANIC COAL CONVERSION EFFLUENTS (83)

Class	Acute toxicity	Chronic effects
Phenols	High	Low
Monoaromatics	Moderate	Low
Polycyclic aromatics	Low	High
Aromatic amines	Moderate	High (?)
Thiophenes	Moderate	High (?)

The significance of synergistic and antagonistic effects is illustrated in Table 122. The numbers in the table are the ratio of the predicted LD_{50} to the observed LD_{50} of various organic compounds when any two of the compounds are administered together in one solution. The predicted LD_{50} was calculated by assuming the toxicities to be additive, i.e., if the LD_{50} for compound A were 2 ppm and the LD_{50} for compound B were 1 ppm, the LD_{50} for 1:1 dilution of each by the other should be 1/2(2) + 1/2(1) = 1-1/2. A ratio greater than unity shows that the toxicity of one or both compounds is increased by the presence of the other. For example, a mixture of acetonitrile and acetone is much more toxic than either compound alone.

In this table, the term, Ucon, is the trademark for a series of polyalkane glycols and diesters. Tegital is the trademark for a series of nonionic and anionic surficants, and PEG is the abbreviation for polyethylene glycol. Cells have been used as an abbreviation for cellulose. Certain obvious trends have been observed relating toxicity to

TABLE 122. UNADJUSTED RATIOS OF PREDICTED TO OBSERVED LD50 VALUES OF 350 PAIRS OF CHEMICALS MIXED 1:1 BY VOLUME (376)

	Ucon LB250	Ucon 50HB260	Toluene	Tetrachlor	Tergitol XD	Propylene oxide	Propylene glycol	PEG 200	Phenyl cell.	Nitrobenzene	Morpholine	Isophorone	Formalin	Ethylene Glycol	Ethyl alcohol	Ethyl acrylate	Ethyl acetate	Dioxane	Diethan-olamine	Carbon tet.	Butyl ether	Butyl cell.	Aniline	Acrylo-nitrile	Aceto-phenone	Acetoni-trile
Acetone	0.53	0.50	1.33	1.83	0.83	0.44	0.88	0.99	0.65	1.47	0.77	1.62	1.81	0.45	0.86	1.08	0.91	1.16	0.98	1.28	0.95	1.08	0.87	1.17	1.19	[illegible]
Acetonitrile	1.12	1.73	2.33	2.02	1.54	0.55	2.27	1.23	0.75	0.85	0.96	1.30	1.46	0.86	0.85	1.05	0.67	3.15	0.74	0.64	1.00	1.06	0.81	1.17	3.31	
Acetophenone	0.45	0.63	1.84	3.28	0.87	0.50	0.67	0.62	0.66	0.98	1.01	0.51	2.15	0.78	1.57	0.85	1.43	1.06	0.58	2.22	1.29	1.49	0.76	0.49		
Acrylonitrile	1.00	0.96	1.40	1.47	1.56	0.50	0.76	0.88	1.08	0.82	0.45	1.04	0.55	1.08	1.00	0.86	1.27	0.73	0.23	1.12	0.80	1.12	0.74			
Aniline	0.54	0.89	0.75	0.92	0.78	0.60	0.71	1.12	0.75	1.32	1.32	0.58	0.31	0.60	0.71	0.54	0.83	0.90	0.67	1.02	0.97	0.70				
Butyl cell	0.92	0.88	1.39	1.55	0.73	0.64	1.30	1.49	0.50	0.85	1.10	0.77	1.35	1.12	1.21	0.89	1.10	0.79	0.64	1.70	1.39					
Butyl ether	0.53	1.34	0.59	2.76	1.18	0.56	0.67	0.80	1.06	1.28	0.92	0.74	2.32	0.71	0.74	0.83	0.90	0.83	0.92	1.67						
Carbon tetrachloride	0.62	0.83	1.51	1.74	0.57	1.08	0.78	1.16	1.11	1.47	2.22	1.97	0.46	0.56	1.09	0.78	0.41	1.21	1.17							
Diethanolamine	0.89	0.80	0.94	0.72	0.71	0.74	0.89	1.29	0.76	0.70	0.93	0.71	1.83	0.71	1.44	0.28	1.02	0.88								
Dioxane	0.70	0.40	0.90	2.83	0.60	0.70	0.51	0.54	0.86	1.39	0.69	0.88	1.41	0.54	0.61	1.10	0.70									
Ethyl acetate	0.72	0.87	0.53	1.31	0.39	1.22	1.15	0.71	0.75	0.97	0.76	1.14	2.70	0.58	0.72	0.98										
Ethyl acrylate	0.53	1.19	0.80	1.06	1.03	0.84	1.13	1.25	0.78	1.07	(f)	0.84	1.00	0.80	1.20											
Ethyl alcohol	0.62	0.96	1.56	1.52	1.12	0.37	0.97	0.66	0.88	0.97	1.18	1.29	1.78	0.24												
Ethylene glycol	0.64	0.69	0.99	0.75	0.73	0.54	0.43	0.82	0.54	1.07	0.47	0.77	1.02													
Formalin	1.36	0.84	2.02	1.38	1.90	0.63	1.38	0.70	1.10	1.20	0.93	0.85														
Isophorone	0.50	0.50	0.80	1.35	0.65	0.41	1.51	0.90	0.46	0.62	1.16															
Morpholine	1.15	1.18	5.09	2.51	1.18	0.43	0.93	0.63	0.56	0.86																
Nitrobenzene	1.26	0.99	0.78	0.82	0.92	0.87	1.00	0.72	1.12																	
Phenyl cell.	0.83	0.75	1.33	1.61	0.52	0.46	0.87	0.69																		
PEG 200	0.94	1.41	1.45	2.70	0.54	0.70	0.99																			
Propylene glycol	0.91	0.72	0.84	1.69	0.83	0.38																				
Propylene oxide	0.48	0.64	0.72	0.66	0.40																					
Tergitol XD	1.22	1.12	0.74	0.67																						
Tetrachlor	1.17	1.33	1.73																							
Toluene	0.64	0.94																								
Ucon 50HB260	1.06																									

molecular weight and molecular structure. In reviewing toxicity data on 1-, 2- and 3-ring aromatic hydrocarbons, Herbes (83) graphically showed a spread of data points to be two orders of magnitude between the most and least sensitive aquatic organisms. He also showed, above a molecular weight of approximately 90, a general 10-fold toxicity increase per 40 to 50 unit increase in molecular weight of PAH.

Comparison of data on benzene, toluene, and xylene suggests that methylation may decrease toxicity. No toxicity data are available for 4- and 5-ring PAH which may be too insoluble to produce acute effects in fish; indeed, anthracene, which is 20 times less soluble than phenanthrene, is not toxic to fish even in super-saturated solutions (83).

Toxicities of polyaromatic phenols have not been investigated; however, LC_{50} values for 1- and 2-ring phenols roughly parallel those of the aromatic hydrocarbon analogs, and presumably polyaromatic phenols would demonstrate similar behavior. As is true for monoaromatic hydrocarbons, methylation somewhat decreases toxicity. Increasing the numbers of hydroxyls also appears to decrease phenol toxicity, although a low LC_{50} range of hydroquinone may indicate high toxicity of polar substituents in the para position (83).

The effect of increasing molecular weight on toxicity of aromatic bases is marked. A 10-fold decrease in LC_{50} values appear to occur with 30-40 unit molecular weight increases. Primary and tertiary amines (e.g., aniline and pyridine) appear to be similar in toxicity. The lower range of LC_{50} values closely parallels arylamine concentrations observed in coking and other industrial effluents, which suggests that acute toxicities of both small and large aromatic amines may be of equal concern (83).

Acute effects of thiophenes (sulfur analogs of aromatic hydrocarbons) have not been studied sufficiently to permit generalizations. Thiophene is 33 percent more toxic to sunfish than is benzene, and thiophene and 2-methythiophene are more toxic to mammals than are the benzene analogs. Higher molecular weight thiophene compounds may also be correspondingly more toxic than polycyclic aromatic compounds (83).

The phenols, while high in acute toxicity, are low both in deleterious chronic effects and bioaccumulation potential. Considering this, plus the relatively high efficiency of their removal by wastewater treatment procedures and their rapid degradation by microbial systems, the phenols can be given a low priority rating for future environmental research. However, a spill of phenol from a producing plant into a Luxembourg river destroyed all of the aquatic flora and fauna in a zone containing 10 ppm phenol and 3 g/l sulfate where the spillage induced an oxygen deficit of 90 to 100 percent. In a zone which suffered a transient contamination of 3 to 10 ppm phenol and 2 to 3 g/l sulfate, damage was greatest to salmonid fish, but most other life forms did not show toxic effects (366).

Additive interactions have been demonstrated among such aqueous pollutants as phenol mixtures, metals, ammonia and phenol, and mixtures of ammonia, phenol, zinc, copper and cyanide. However, no interactions were found among phenol, ammonia, and zinc when the latter toxicant comprised greater than 74 percent of the total predicted toxicity. Results of experiments to test the synergism between resorcinol and 6-methylquinoline are contradictory (367).

Petrochemicals (including ethylbenzene) in high concentrations all cause similar symptoms in animals; immediate excitation and great activity followed by an anesthesia-like depression. Most of the petrochemicals studied showed a special affinity for nerve tissue and acted as narcotics in mammals (309).

Ethylene is the chief hydrocarbon gas that produces adverse effects at known ambient concentrations. Plants are more sensitive to ethylene than to other hydrocarbon gases.

Acetylene, propylene, and vinyl chloride all cause phytotoxicity symptoms resembling those of ethylene. But 60 to 500 times the ethylene concentration is required to produce comparable effects. Ranking according to toxicity are: ethylene, acetylene, propylene, vinyl chloride (117).

Carcinogenicity--

The potential carcinogenicity of coal liquefaction wastes, products, and by-products is a major environmental concern. The following section will briefly outline types of carcinogenic compounds which have been or may be associated with the coal liquefaction process and the factors influencing the carcinogenicity of such compounds.

The potential hazard of liquefaction waste discharge or product oil, when considered as a whole, will be evaluated in terms of laboratory data and epidemiological studies of coal liquefaction plants or industries utilizing similar technologies.

Coal liquefaction processes are known to produce carcinogenic compounds. The extent of carcinogenic hazard, however, has not been determined. Table 123 lists compounds, which may be present in coal liquefaction effluent streams or product oils and are known or suspected carcinogens.

Factors affecting carcinogenicity--Numerous factors interact to influence the carcinogenicity of a substance; even when analyses of the compounds present in a particular waste stream are available, it is difficult to predict the environmental impact of the waste stream as a whole. An example of the intricacy of various factors influencing carcinogenic potential of a compound can be illustrated with PAH. The carcinogenicity of polycyclic compounds to mammals is

TABLE 123. KNOWN OR SUSPECTED CARCINOGENS WHICH MAY BE IN THE EFFLUENT STREAMS OF COAL LIQUEFACTION PLANTS

Compound Type	Example	Reference
bicyclic compounds	benzidine	79
nitrosamines		368
nickel	nickel carbonyl	150,201,68
chromium	chronic trioxide or chromate salts	150
beryllium	beryllium oxide	150,201
arsenic	tricalcium arsenate	150,201
selenium	selenide sale	150,201
cobalt	cobalt sulfide	201
lead	lead chromate	201
zinc	zinc chromate	201
mercury	elemental mercury	201
cadmium	cadmium sulfide	150,201
anthracenes	anthracene and 9,10-dimethylanthracene	150,201
chrysenes	5-methyl cystein	201,150,79
benzanthracenes	benzo(a)anthracene	147,201,79,150,68
fluoranthene	benzo(j)fluoranthene benzo(b)fluoranthene	201,147,98,79
cholanthrenes	20-methylcholanthrene	201
benzopyrenes	benzo(e)pyrene and benzo(a)pyrene	201,79,150,147,68,137
dibenzopyrenes	dibenzo(a,l)pyrene, dibenzo(a,n)pyrene, dibenzo(a,i)pyrene, dibenzo(a,h)pyrene	201,150
mono- & dibenzacridines	dibenz(a,h)acridine	150,201
benzocarbazoles	7H-benzo(c)carbazole	201
dibenzocarbazoles	7H-benzo(c,g)carbazole	201
benzanthrones	benzo(a)anthrone and 7H-benz(d,e)xanthracene-7-one	150,201
aminozobenzenes	4-dimethylaminoazobenzene	150
acenaphthenes	acenaphthene	79
naphthylamines	alpha-naphthylamine beta-naphthylamine	150,98
fine particulates	sulfur, coke	150
amines	diethyl amines methylethyl amines	150
monoaromatic	benzene	150
pyrenes	cyclopenta(c,d)pyrene indeno(1,2,3-c,d)pyrene	98 135,150,147

dramatically altered by co-exposure to other aliphatic or aromatic hydrocarbons or to phenols (83,201). Concentrations which produce effects may be lowered by several orders of magnitude when present in combination with other organic compounds.

Such compounds which by themselves are not carcinogenic but which can promote multiplication of abnormal cells after initiation of the conversion of a normal cell to a latent tumor cell by a carcinogen are referred to as cocarcinogens. Some substances which are thought to have cocarcinogenic properties are phenols, long-chain hydrocarbons including cresols, nonionic detergents, phorbal, myristate, acetate, and anthralin (146,197). For example, coal tar itself is more carcinogenic than its known individual carcinogenic compounds, thus suggesting the presence of cocarcinogens in coal tars. In an experiment performed in 1967, Tye and Stemmer removed the phenols from coal tar, and observed that the carcinogenic activity of the resulting material was significantly decreased. In 1969 Conzelman discovered that the skin cancer-inducing activities of benzo(a)pyrene and benzo(a)anthracene were increased 1000 times when n-dodecane was used as the solvent. In 1970, Laskin and co-workers reported that inhaling benzo(a)pyrene alone did not produce lung cancer in rats, while inhaling both sulfur dioxide and benzo(a)pyrene did produce cancerous tumors (201).

The carcinogenic potential of certain PAH is greater in solvents such as n-dodecane and dodecylbenzene than in hydrocarbons of low molecular weight. Hydrocarbons which increase the rate of cancer induction by a carcinogen are capable of preconditioning the skin of mice to render it more responsive to subsequent applications of a carcinogen.

The accelerating solvents are effective promoters of carcinogenesis initiated by a single application of a carcinogenic material (146).

An unexpectedly high incidence of bronchogenic carcinomas in hamsters was induced by intratracheal injection of benzo(a)pyrene attached to iron oxide (146). The enhanced tumorigenicity of benzo(a)pyrene-iron oxide combinations may be due to a reduction in carcinogen clearance rate. Benzo(a)-pyrene proved to be a loosely bound soluble carcinogen, which left the carrier particles and entered the upper airway epithelial cells during clearance of the particles by mucous and ciliary action. Thus, mainly epidermal carcinomas of the major bronchi and trachea were produced (146).

Part of the confusion in predicting carcinogenic behavior is demonstrated in Table 124 which was taken from the report of Guerin and co-workers (94). This table demonstrates that a slight change in the chemical structure may alter the carcinogenic potential drastically. The carcinogenic benzo-(a)-pyrenes have one more fused benzene ring than noncarcinogenic pyrene (4 more carbons). The addition of a methyl group to chrysene can increase or decrease the carcinogenic activity depending on whether the methyl group is added in the 5- or the 6-ring position. The addition of a fused benzene ring to fluoranthene can increase or not affect the carcinogenic activity.

Examples of other situations in which the carcinogenic potential of a compound is altered are given below:

TABLE 124. SPECIFICITY OF CARCINOGENIC ACTIVITY (369)

Compound	Activity	Compound	Activity
Pyrene[1]	-	Fluoranthene[1]	-
Benzo(e)pyrene[1,2]	+	Benzo(b)fluoranthene[4]	++
Benzo(a)pyrene[2]	+++	Benzo(j)fluoranthene[4]	++
Chrysene	+	Benzo(k)fluoranthene[4]	-
5-Methylchrysene[3]	+++	Napthalenes[5]	-
6-Methylchrysene[3]	-	Benzo(g,h,i)perylene[1]	-

[1]Shown cocarcinogenic
[2,3,4]The compounds with the same numbers are stereoisomers
[5]Shown tumor promoting
Relative carcinogenicity: not carcinogenic (-), carcinogenic (+), moderately to very carcinogenic (++,+++).

All studies use mouse skin model except for tumor-promoting study of napthalenes.

- Seemingly minor structural differences can completely control bioactivity, e.g., catechol (1,2-dihydroxybenzene) is a potent cocarcinogen; (2) while resorcinol (1,3-dihydroxybenzene) is apparently inactive (94).

- One toxicological study has demonstrated that napthalene actually inhibits skin tumor production when applied together with benzo(a)pyrene on laboratory mice (282).

- The carcinogenic and mutagenic potential of N-nitrosopiperidines is blocked by a substituent in the alpha position (2,6-dimethyl; 2,2,6,6-tetramethyl). Substitution with a carboxyl group eliminated both mutagenic and carcinogenic activity. It seems that activation at the alpha position is necessary for both mutagenic and carcinogenic activity (103).

- Many polynuclear aromatic compounds are carcinogenic while others are not (370). Carcinogenic activity of coal tars was found to be concentrated in the rogen, arsenic, and sulfur. It was subsequently found that pyrolysis of hydrocarbons, such as isoprene and acetylene, in a hydrogen atmosphere produced carcinogenic coal tars (370).

- Some natural compounds apparently suppress the activity of PAH carcinogens. For example, Vitamin A has been shown to markedly reduce the incidence of respiratory tract tumors in hamsters when the animals were injected intratracheally with a mixture of benzo(a)pyrene and ferric oxide (a cancer promoter). Vitamin A is thought to act by inhibiting benzo(a)pyrene metabolic pathways, especially those proceeding through an epoxide intermediary. Like Vitamin A, selenium combined with Vitamin E significantly reduced the number of PAH-induced skin tumors in mice. Selenium may act as an antioxidant. A number of antioxidants as well as some weakly carcinogenic hydrocarbons have been shown to exhibit anticarcinogenic properties when applied with potent carcinogens (103).

Specific carcinogenic compounds--Possibly the most hazardous coal-derived compounds are PAH since many are known animal carcinogens or suspected human carcinogens. Although carcinogenicity in mammals is almost exclusively limited to 4-, 5-, and 6-ring polycyclics and some methylated derivatives, no definite structure-effect relationship has yet been determined. Moreover, the presence of N or S heteroatoms in basic polycyclic hydrocarbon structures has been demonstrated in different cases either to intensify or reduce carcinogenic effects. Because N- and S-containing polycyclic compounds are more water-soluble than the corresponding hydrocarbons, they may be present in effluents at greater levels than those of the polyaromatic hydrocarbons; their hazards may therefore equal or exceed those of non-substituted polycyclics.

Virtually nothing is known, however, of subacute interactions between compound classes at the low levels anticipated in effluents. Potential hazards exist for both aquatic organisms and human populations exposed through either water consumption or ingestion of fish and shellfish. The scarcity of information on carcinogenic and mutagenic effects of heteroatomic polyaromatic compounds, the potential interactions between compound classes, and the complete absence of information on effects of trace levels of all polycyclic compounds to aquatic organisms indicate the urgent need for research in these areas.

Aromatic amines are another class of aromatic carcinogens found in coal tars which have the potential of being formed in the liquefaction process. Amino azobenzenes and napthylamines have been specifically identified in coal tars, and benzidines and aminobiphenyls are suspected of being present (201). Di- and tri-aromatic hydrocarbons

(naphthalene, anthracene, phenanthrene) present in coal tars have not been shown to be carcinogenic. Coal tar hydrocarbons containing six or more fused benzene rings tend to be less active than pentacyclic hydrocarbons. One hexacyclic hydrocarbon known to be carcinogenic is dibenzo(a,h)-pyrene. Other 6- and 7-ring hydrocarbons in coal tars (anthanthrene, perylene, coronene) have been shown to be inactive, or at most, weakly carcinogenic (201).

Table 125 shows the chronic effects (including carcinogenesis) of several PAH on various aquatic organisms. Table 119 shows the acute and subacute effects of various PAH on animals. Benzene exposure has also been associated with leukemia and Hodgkin's Disease (79,117). Benzidine has been implicated as a cause of human bladder cancer (371-375).

Process Waste and/or Product Considered As a Whole--

Coal liquefaction studies--Laboratory animal studies have been performed to determine the carcinogenicity of liquefaction product oil. Several streams and products of the coal-hydrogenation process were painted on the skin of mice to test their carcinogenic effect. The light-oil stream and eight separate fractions of this stream were all without tumorigenic action. The light- and heavy-oil products were mildly tumorigenic, producing predominately papillomas. However, the streams boiling at higher temperatures, the middle oil, light-oil stream residue, pasting oil, and pitch product were all highly carcinogenic. The degree of carcinogenicity increased, and the length of the median latent periods decreased as boiling points rose. The median tumor- or cancer-latent period is the time necessary to reach a 50 percent tumor or cancer index. Tumor induction

TABLE 125. AQUATIC TOXICITY OF PAH (79)

Organism	Method	Chemical Used	Temp. (°C)	Exposure time (hours)	Dose administered	Number of deaths	Within	Effects produced	Within
Rana pipiens	Injection into Kidney	3,4-benzpyrene	14-16°	Single dose	0.3-0.5 mg	15/15	5 days		
		5,7-dimethyl-1,2-benzanthracene			0.3-0.5 mg	8/8	5 days		
		3-methylcholanthrene			0.3-0.5 mg	6/6	5 days		
		p-aminoazobenzene			0.3-0.5 mg	20/59	3 weeks	adeno-carcinoma in 23%	3 wks-7 months
		1,2,5,6-dibenzanthracene			0.3-0.5 mg	13/36	3 weeks	adenocar. in 26%	3 wks-7 months
Bufo arenacum	Implantation into tail subcutaneously	20-methylcholanthrene	—	Single dose	Not given (crystals)	—	—	Super-numerary fins in 1/38	16 days
		3,4-benzpyrene	—	Single dose	Not given (crystals)	—	—	Sup. fins in 1/62	26 days
		7,12-dimethylbenz(a) anthracene	—	Single dose	Not given (crystals)	—	—	Sup. fins in 5/50	20 days
Lepomis macrochirus	Flowthrough	benz(a)anthracene	—	6 months	1.0 ppm	87/100	6 months	—	—
Paracentrotus libidus	Static	7,12-dimethylbenz(a) anthracene	18-20°	48 hours	1×10^{-7} to 1×10^{-4} M	—	—	Develop-mental abnormali-ties in 70-100%	48 hrs.
		benzo (a) pyrene							

periods were only slightly delayed by dilution of the pasting oil, application of barrier creams, or applications of various washing methods (146).

In the absence of medical data, organic compounds with boiling points above 250°C should be handled with caution. In general, these are the compounds with the higher molecular weights, larger number of aromatic rings, lower water solubility, and higher potential for relative persistence and bioaccumulation in organisms (136).

The chemical composition of products from coal liquefaction processes suggests that they will exhibit considerable carcinogenicity. Benzo(a)pyrene concentrations ranged from 40 to 50 ppm in the coal-derived products as compared to 1 ppm for carcinogenic condensed tobacco smokes. Concentrations of PAH are usually 10 to 100 times the level found in smokes; and compounds of known tumor-initiating, tumor-promoting, and cocarcinogenic activity such as pyrene and alkylnaphthalene are present (369,376).

Observations at a large-scale coal liquefaction pilot plant at Institute, West Virginia, indicated that workers were exposed to a significant risk of cancer. The incidence of skin cancer in workmen exposed to the coal hydrogenation process was between 16 and 37 times greater than that of West Virginia or United States as a whole. Benzo(a)pyrene deposits on the skin of workers could often be traced to exposure to high concentrations of airborne oil fumes. Analysis of air samples for benzo(a)pyrene indicated that pitch treatment or solids removal operations contributed significantly to airborne contamination. Maintenance and repair operations often resulted in direct dermal contact with carcinogenic materials (197).

Laboratory studies of the product oils from other hydrogenation processes have also indicated carcinogenicity. Experimental studies were performed on Bergius oils and Fischer-Tropsch oils obtained from the experimental coal hydrogenation-liquefaction operation of the U.S. Bureau of Mines at Bruceton, Pennsylvania. All fractions were tested for carcinogenicity by repeated application to the skin of mice and rabbits and by intramuscular injection into the thighs of rats. Eight of nine fractions of the Bergius oil fractionation products were carcinogenic with the degree of carcinogenic potency generally increasing with the increasing boiling point. Fischer-Tropsch synthesis products were less carcinogenic than Bergius products and appeared to have a narrower species and tissue susceptibility spectrum (146).

Similar industry studies--Insight into the potential carcinogenic hazard of coal liquefaction processes can be gained by examining process variables of similar industries, including by-product coking and petroleum refineries. Some of the similarities and differences between these various industries and their respective products were discussed and are summarized in Table 88. Briefly, coal tars consist of volatiles driven off coal which have been heated to very high temperatures in the absence of air. By comparison, liquefaction processes utilize relatively low temperatures (less than 500°C), high pressures (13.8 to 27.6 MPa) and a hydrogen-enriched atmosphere. These differences in processes should be kept in mind when applying carcinogenic studies using coal tar to liquefaction processes.

The varying carcinogenic potential of different fuel conversion processes is demonstrated by a study of lung cancer incidence among coke oven workers having five or more years exposure. The data, shown in Table 126, suggest a

possible relationship between the type of coke, oven and coking temperature, and incidence of lung cancer. The indication is that higher temperature processes tend to produce a more potentially carcinogenic environment.

TABLE 126. TEMPERATURE RANGE OF CARBONIZING CHAMBERS AND EXCESS OF LUNG CANCER REPORTED (201)

Type of carbonizing chamber	Temperature range, C	Excess of lung cancer reported, percent
British vertical retorts	400 - 500	27
British horizontal retorts	900 - 1100	83
American slot-type coke ovens	1200 - 1400	255
Japanese gas generators	1500	800

One difficulty in the quick identification of an agent responsible for occupational and/or environmental human cancer is the long latent period. The latent periods for skin and lung cancer from tar and tar fumes have been estimated to be 20 to 24 and 16 years, respectively. Latent periods depend upon the relative potency of a particular carcinogen, its physicochemical properties, the physicochemical and co- or anticarcinogenic properties of its vehicle or its associated agents, the route of contact, the intensity of the individual exposures, and the total duration of exposure. With increasing intensity of exposure, an increase in the incidence of cancers and a shortening of the latent period occurs (146).

The carcinogenic potential of coal tars and coke oven emissions has been extensively studied and documented.

Workers exposed to high levels of PAH-containing coal volatiles show an increased incidence of skin and lung cancers. Benzo(a)pyrene, a component of coal tar and an identified carcinogen, is the most tested PAH and also the compound most often chosen as the indicator compound for monitoring PAH. It has been observed in synthetic oil samples (41 ppm), coal and petroleum tars (2000 and 200 ppm), polluted air (38 ppb), surface water (0.01 to 0.1 ppb), groundwater (0.001 to 0.010 ppb), soil (40 ppb), plants (1 to 10 ppb), and sediments undisturbed since the year 3 A.D. (19.5 ppb). Benzo(a)pyrene has produced tumors in rats, mice, hamsters, guinea pigs, rabbits, ducks, and monkeys by oral, skin, and intratracheal administration (136,103).

An unusual incidence of lung cancer was first reported in Japanese (coal) gas producer workers by Kuroda and Kawahata in 1936. The excess lung cancer risk for gas producer workers was confirmed by British studies of death certificates in England and Wales for 1921 to 1932. This study also showed that other coal carbonization and by-product workers experienced greater than expected lung cancer mortality. An excess risk of bladder cancer was observed among men employed at coal carbonization processes. In 1946, Henry reported an average annual scrotal cancer mortality rate of 21.1 per million in coke oven workers during 1911 to 1938, as compared with a general population rate of 4.2 (146).

Employees who work topside on coke ovens have an increased rate of lung cancer (cause of death for 35 workers was lung cancer when only 10.4 deaths were predicted for a similar control population). Partial topside workers showed seven deaths from lung cancer when 3.7 deaths were

expected from a normal population. Side oven workers had 27 deaths when 19.4 were expected. Topside workers would be exposed to a greater concentration of volatiles from the coking process, and this is thought to be the explanation of the above data (146).

A gradient in risk related to length and area of employment suggests the existence of a dose-response relationship between some carcinogenic substances, coke oven or gas retort effluents, and the development of lung cancer. In Japan, 21 men exposed to coal tar fumes in generator gas plants developed lung cancer in a six-year period; the longer the exposure to coal tar fumes, the greater the mortality from lung cancer. In Allegheny County, Pennsylvania, men employed at the coke ovens for at least five years exhibited a mortality rate for lung cancer 3.5 times the expected rate, while the rate of all coke oven workers was 2.5 times that expected based upon mortality experience for the general population. Because the greatest exposure to coke oven emissions occurs at the top of the ovens, the lung cancer mortality rate for men employed in that position at least five years is seven times the expected rate, while the rate for men employed at least five years exclusively at the sides of the oven was twice the expected rate (197).

The mortality experience of groups of gas workers in Great Britain over a 12-year period was examined. The workers categorized as coal carbonizing process workers, had a significant increase in deaths from lung cancer, bladder cancer, and cancer of the skin and scrotum. The tarry fumes that escaped from retorts contained extremely high concentrations of PAH. Heavy exposures to coal hydrogenation materials were found to be capable of producing both benign

and malignant skin tumors. The incidence of skin cancer in workmen exposed to the coal hydrogenation process was between 16 and 37 times greater than that of West Virginia or the United States as a whole (197).

It is generally acknowledged that coal tar pitch plays a role in inducing skin cancer. Squamous cell carcinoma incidence of 2.8 percent was observed in pitch workers, while an incidence of 0.4 percent was observed in an unexposed population. Incidences of intraepidermal carcinoma, basal cell epithelioma, and numerous pre-cancerous lesions (especially coal tar dermatosis) were observed to be higher in pitch workers (197).

Analysis of particulates collected from coke oven charging emissions indicates that carcinogenic materials are generally present and include the following: benzo(a)-anthracene, benzo(a)pyrene, benzo(e)pyrene, cholanthrene, and isomers of benzofluoranthene.

Mutagenicity and teratogenicity--The following fractions of COED Syncrude were found to be mutagenic using the Ames test: water soluble strong acids, ether soluble bases, hexane soluble fraction, hexane/benzene soluble fraction, and the benzene/ether soluble fraction (377).

Epler and co-workers (338) studied the mutagenicity of several coal-derived products using the Ames test. The samples which were surveyed and their sources are: (1) a coal liquefaction product from a process under development, courtesy of the Pittsburgh Energy Research Center (Synfuel A), or Coal A from ORNL respository; (2) coal liquefaction product from the COED pyrolysis process, courtesy of FMC

(Synfuel B), or Coal B from ORNL repository; (3) Louisiana-Mississippi sweet crude oil, courtesy of Dr. J.A. Carter of the Analytical Chemistry Division, Oak Ridge National Laboratory; (4) composite crude oil samples from materials obtained through the courtesy of Dr. D. Latham of the Laramie Energy Research Center.

The possibility exists that these samples may bear no relationship to the processes as they may exist in the future. These materials are not necessarily representative of either all natural crudes or products from synthetic fuels processes. They were used simply as appropriate and available materials for the feasibility study (378).

The results from the two Synfuels show an increase in total activity over the natural crude oils. Synfuel A appears to contain significantly higher activity than all other samples. Both Synfuels exhibit high-specific activity components in the basic fractions; and both Synfuels show considerable activity, again, in the neutral fraction. Synfuel A appears also to possess appreciable activity in the ill-defined NaOH fraction. All tests were carried out in the presence of the rat-liver microsomal activation system. Slight mutagenic activity without enzyme treatment was occasionally noted (378).

N-nitrosopiperidines have been reported to be carcinogenic and mutagenic. In general, the carcinogenicity and mutagenicity of N-nitrosopiperidine derivatives show a high degree of correlation. Nitrosopiperidine (NP); 2-methyl-NP, 3-methyl-NP, 4-methyl-NP, 3,5-dimethyl-NP, and 1,2,3,6-tetrahydro N-nitrosopyridine were effective mutagens, on Saccharomyces cerevisiae when metabolic activation by rat

liver microsomes was provided. 3,4-dichloro-NP was mutagenic itself, and metabolic activation enhanced the effect. 2,6-dimethyl-NP was not a mutagen (136,103). Benzo(a)pyrene is mutagenic to mammalian cells in culture when activated by a microsomal activation system (136,103). Other reported teratogens potentially produced during liquefaction processes include nitrosamines (368) and benzene (79).

ESTIMATED EFFECTS ON CONTACTED ECOSYSTEMS

Overall Impacts

A coal conversion complex of the approximately 7,950 m^3/day size analyzed in this report may require up to 200 square miles of land development (379). This includes the plant, mine, town growth, new industrial park, reservoir, inter-connecting road and utilities, landfill, etc. Approximately 23,000 metric tons of coal and 45,000 metric tons of water will also be needed every day over a 20- to 30-year plant life (379).

The relative geographical makeup and general interrelationship of environmental compartments for such a 7,950 m^3/day coal liquefaction complex are shown in Figures 68 and 69 (379).

Environmental impacts of the coal conversion complex will include:

- Increased air and water pollution in the region surrounding the plant
- Diversion of 0.039 to 0.098 m^3/sec of water from other area requirements (379)

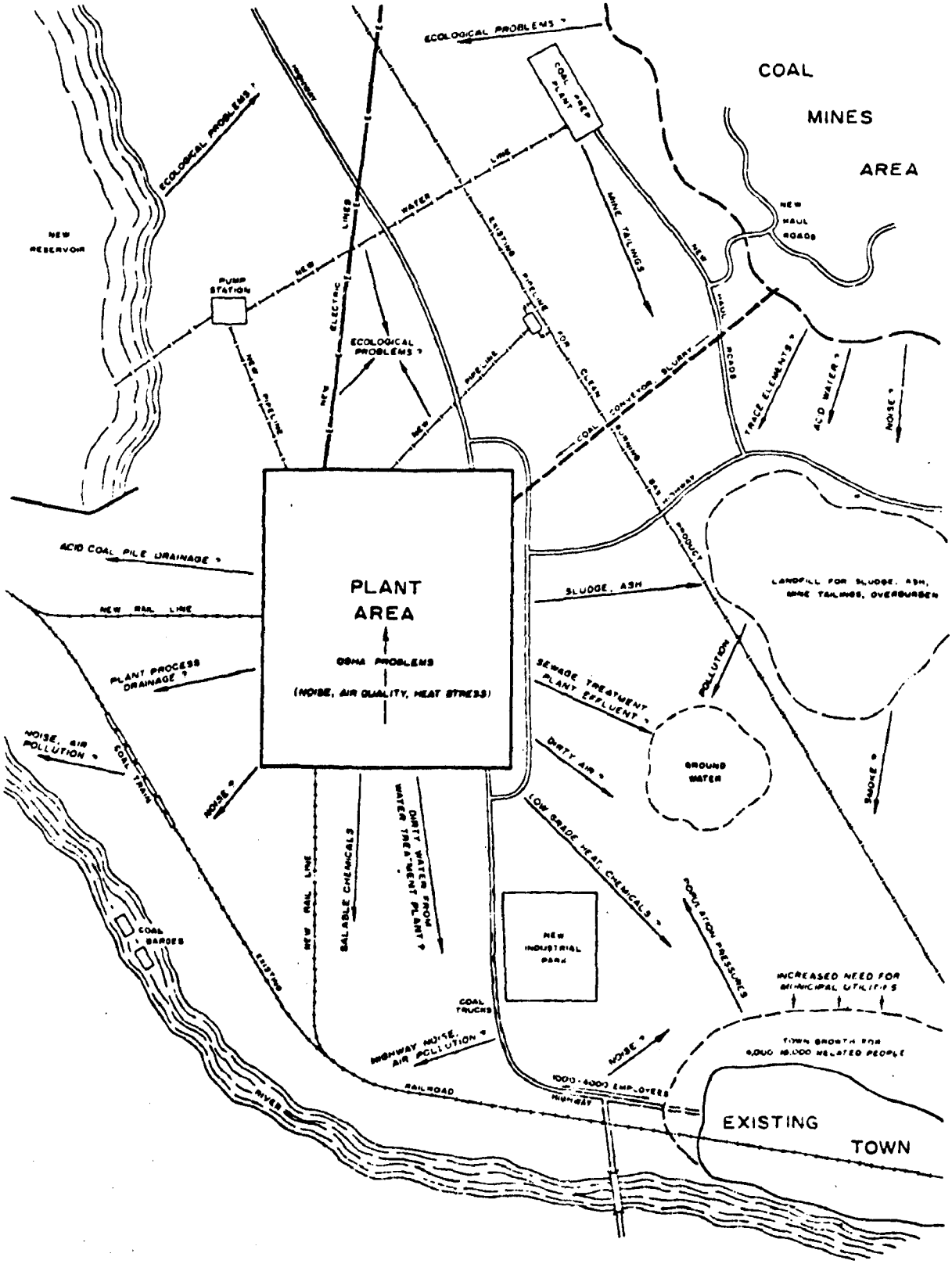

Figure 68. Potential environmental interactions between a town, coal mine, and conversion plant (379)

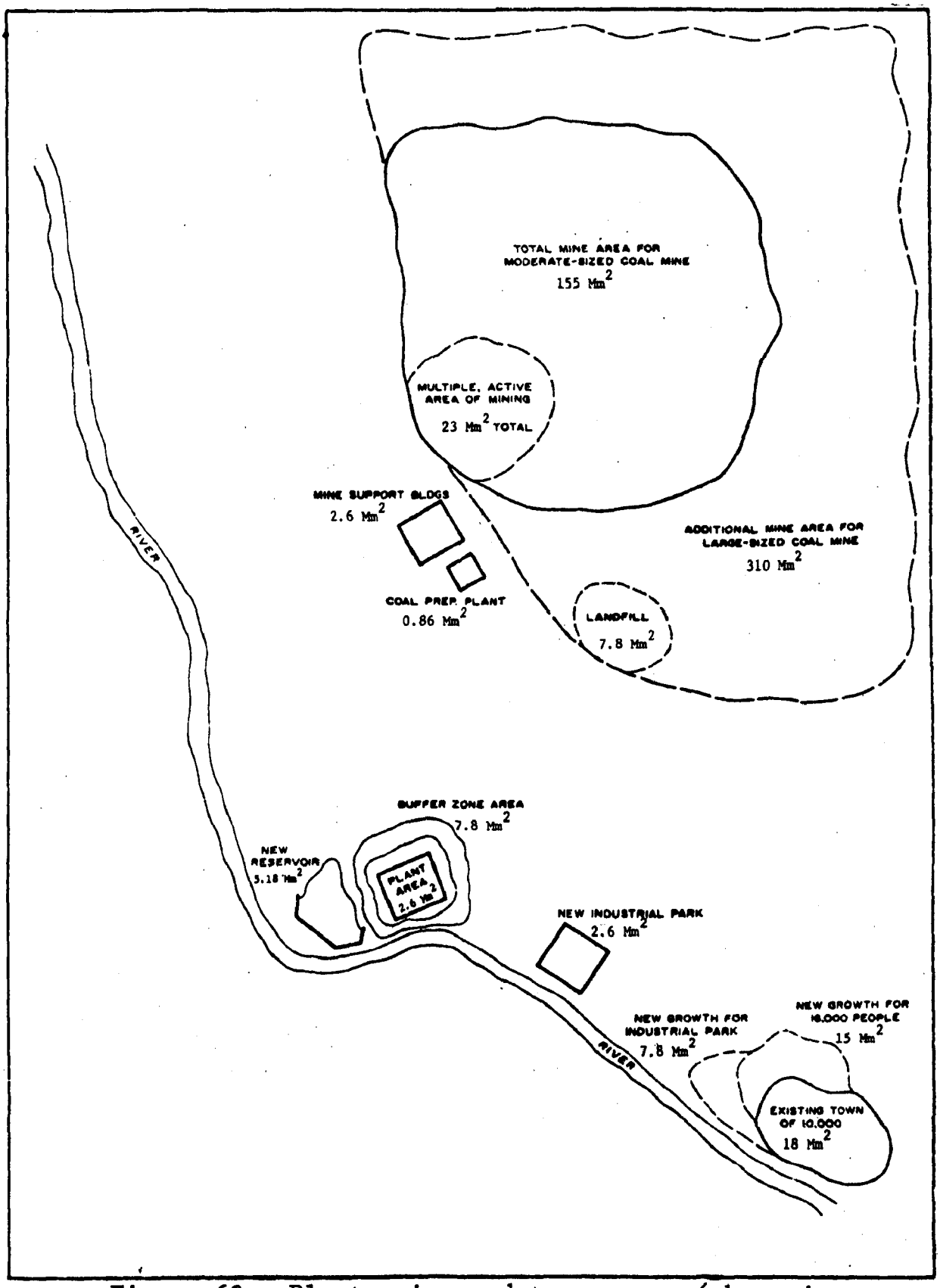

Figure 69. Plant, mine and town areas (shown in approximately correct size relationship (379)

- Requirement for daily disposal of roughly 10,000 tons of solid waste

- Disturbance of up to 518 Mm^2 of land; and the soil, flora, and fauna

- Influx of perhaps 15,000 people with concomitant social and economic perturbations (213)

- Exposure of area residents to new occupational hazards

- A general, area-wide increase in ambient noise

- Aesthetic impacts from the appearance of rapid growth and accompanying odors and noise

- Heavy demands on area transportation systems, and construction of new ones.

While the main thrust of this report is aimed at the environmental characterization of the coal liquefaction portion of the overall conversion complex, it should be recognized that the environmental impacts of the related mining operations, coal cleaning and preparation wastes, land and water requirements, transportation systems, utility requirements, and population relocations may far outweigh those for the liquefaction process and its discharges.

Liquefaction Process Discharges and Their Effects

In view of the early stage of commercial technology development and the wide variety of potential pollutants for coal liquefaction systems, there is a strong need for data

on the actual environmental discharges, and their effects. Until safe limits, based on hard data, have been established, none of these potential pollutants can be ignored. Therefore, only general estimates of the effects of discharges from the priority liquefaction processes of this report may be made. On the basis of the small amount of data available, these estimates may be summarized as follows:

- Using existing or modified treatment and control technology, potentially large-volumed pollutants such as hydrogen sulfide, sulfur dioxide, phenols and other hydroxylated aromatics, ammonia, and carbon-containing residues, will probably be controlled to emission limits similar to those achieved in petroleum refineries and petrochemical complexes.

- Trace constituents, sometimes highly toxic in the discharge streams and solid wastes, will be of prime concern and need to be identified, quantified, and their effects determined.

- Products and high-boiling carbon-containing process residues are themselves a prime source of environmental concern.

The following discussion is restricted to the toxic trace constituents in both wastes and products. Treatment and control of large volume wastes are discussed in Section 7 of this report.

Inorganic Materials--

Trace quantities of potentially hazardous inorganic materials have been reported or conceptualized in coal liquefaction discharges to all media. In preceding discussions, based on coal composition and ash extractions, it has been indicated that antimony, copper, chromium, lead, beryllium, arsenic, cadmium, cobalt, iron, molydenum, nickel, selenium, thallium, mercury, manganese, zinc, polonium, radium, radon, silver, tellurium, tin, gold, uranium, chlorine, bromine, and fluorine elements or compounds may have significant environmental effects. Sodium, calcium, aluminum, and sulfur compounds may also present environmental problems by being present in large concentrations.

In general, the inorganic metals and most of their compounds are solids at coal liquefaction temperatures and may be expected to go through the process as inert material with the ash residue. Elements such as fluorine, bromine, and chlorine are also likely to form stable high-boiling compounds which will go through the process unchanged.

There are a number of metals, metallic compounds, and other inorganic substances, however, which are either relatively volatile or have high solubility in water. Therefore, the distribution of the inorganic compounds in the various media discharges can only be estimated at this time. This has been done in previous sections of this report. The estimated environmental effects of the inorganic discharges are described in the following subsections.

Atmospheric discharges--The main source of environmental discharge of process-related airborne wastes is the treatment systems for acid gas streams. Discharge of volatile inorganics such as mercury, selenium, metallic carbonyls,

and metallic hydrides have been postulated; however, there is a need to obtain data to support or refute these postulations. The relatively low reaction temperatures (for hydrogenation reactions), water scrubbings, solvent absorptions and other operations encountered by the acid gas streams would all tend to reduce such inorganic discharges. Also, many (but not all) of the metallic carbonyls and hydrides are readily decomposed by air oxidation or water contact. As a result, the overall environmental effect of inorganics discharged to the atmosphere is not expected to be great.

Aqueous effluents--Many inorganic materials are soluble in water, and limited information is available on the presence of these materials in the process waste stream. Using only the limited information, the environmental effect of toxic or hazardous metals in the process wastewater would be small. The wastewater treatment would still have to include a lime precipitation step to reduce lead or other metal content to regulatory limits. However, the effluent streams need to be evaluated for constituents on which either no data or insufficient data exist before the impact can be evaluated.

Other wastewater streams connected with coal liquefaction auxiliary operations such as coal preparation (coal pile runoff and tailing ponds discharges) and hydrogen generation (sour gas scrubbing and treatment and ash disposal), would be expected to have environmental effects similar to those identified in the literature for these auxiliary operations.

Solids waste--Most of the inorganic trace elements in coal may be expected to be concentrated in the ash from the hydrogen generator. Sludges from sulfur dioxide scrubbers also contain significant inorganic material. Since the normal disposal for both of these is landfill, the significant consideration is leachability of soluble components. The environmental effects of leachability should be similar to those for ash disposals for coal-fired furnaces, steam-electric generating plants, coal gasification operations, and other coal-burning facilities. However, not all of these have been adequately evaluated. Environmental effects of sludges from the sulfur dioxide scrubbers also should be similar to those encountered for coal-fired utility plant scrubber sludges. Detailed information on ash, sludges from sulfur dioxide scrubbers, and coal refuse and spoil pile and their leachates is given in Tables 73, 77, 81, 82, 87, 104, and 116.

Products--On the basis of limited data (Table 77), trace elements are expected to concentrate in the solids waste rather than in the products.

Organic Compounds--

Atmospheric discharges--Toxic organic compounds in coal liquefaction operations are generally either relatively non-volatile (PAH) or water soluble (phenolics). Therefore, they are concentrated in the products, high-boiling bottom fractions, wastewater streams, and solids waste. The gaseous discharge streams from the sour gas treatment are not expected to contain major amounts of these toxic substances.

Aqueous effluents--Table 79 shows that there are individual nonpolar single and double-ring aromatic compounds in the wastewater from the Synthoil process and that concentra-

tions less than 1 ppm are expected. Table 120 indicates that the levels would not be expected to affect freshwater organisms, with the possible exception of naphthalene causing the green flagellate, Clylamydomonas anqulosa, to lose photosynthetic capacity. Of course, the synergistic and antagonistic effects of combinations of pollutants, as well as chronic effects on biota, are impossible to predict using present data. The concentrations of some of these organic compounds would be toxic to certain marine or estuarine organisms (see Table 120).

Some organics, such as phenols, are efficently removed from wastewaters in biological oxidation treatment ponds; however, some multiring aromatic compounds including naphthalene and PAH are relatively refractory and will likely pass undegraded through the biotreatment plant. Further, the substitution of N or S heteroatoms in multiring compounds, or the alkylation of benzene acts to retard microbial oxidation rates. Similarly, monohydric phenols are more fully degraded than polyhydric compounds, and the polyaromatic phenols would be expected to be degraded even more slowly. Fortunately, multiring aromatic compounds are absorbed tenaciously by activated charcoal and should be removed if subsequent activated charcoal treatment is employed.

Solids waste--Normally ash, whether from hydrogen generation or other combustion operations, should be relatively free of toxic organics. Carbon-containing solids waste and residues, on the other hand, have significant amounts of toxic organics. Therefore, handling and exposure to carbon-containing solids waste either prior to use in hydrogen generation or other use/disposal should be given attention. There is also the possibility of incomplete combustion of carbon-containing wastes. For example, the

concentrations of PAH in two fly-ash collectors under various circumstances in a coal-fired power plant are shown in Table 84.

The area of solids waste handling, combustion, and disposal will need further attention as the conceptualized coal liquefaction plants of today become future realities.

Products--Analysis of the constituents found in various fractions of liquefaction products have been presented in the following tables: 16, 19, 21, 22, 23, 24, 26, 32, 37, 38, 42, 89, 92, 93, 94, 95, 96, and 98.

Besides cocarcinogenic effects, the environmentally significant organics seem limited to aromatic compounds. Coal products have long been notorious for their carcinogenicity, and recent studies have implicated PAH. Theoretical considerations of the structure of coal itself indicate that PAH are likely to be produced as the coal is depolymerized (especially by reduction); thus, we would expect a higher carcinogenic potential of coal liquefaction products as related to petroleum products. This prediction is further substantiated by the levels of carcinogens (as PAH) found in the product as related to petroleum products (Tables 89, 91, 92, 93, 94, 95, 96, and 98).

In coal tars, carcinogenic agents were found in very small amounts in tars formed below 450°C. The carcinogenic agents increased rapidly between 450 and 560°C and continued at a lower rate over the range of 560-1250°C. Since most coal liquefaction processes are carried out in the range of 430-540°C, the waste materials and products would be expected to vary considerably in their carcinogenic potential from approximately equal to natural crude oil products

for material liquefied at 430°C to more hazardous for material liquefied at 540°C.

In summary, the products of coal liquefaction should be considered potentially hazardous, particularly the higher boiling fractions and residues. The hazard of liquefaction products relative to that of crude petroleum and coal tar has not been established. However, it is believed that liquefaction oils will be less carcinogenic than coal tars, but more hazardous than petroleum crude. With regard to sulfur levels, liquefaction oils are within the range of that of refined petroleum products.

The environmental effects of toxic organics in coal liquefaction products and high-boiling, carbon-containing residues represent the area of greatest estimated concern. Quantitative definition of the presence and effects of these materials on workplace personnel, other impacted personnel, and the ambient environment is essential.

This report has identified some of the potential pollution problems of coal liquefaction processes. This has been done mainly from coal analyses currently available and from the apparent process steps that will be required. However, for an environmentally sound system, the fate of all potential pollutants must be determined. This can only be accomplished by the collection and evaluation of actual process and effluent stream information.

REFERENCES

1. Hydrocarbon Research, Incorporated. Project H-Coal Report on Process Development. P.B. 234-576. OCR/RDR: 26/Final, 1968.

2. Shultz, W.D., Ed. Preliminary Results: Chemical and Biological Examination of Coal-Derived Materials. ORNL/NSF/EATC-18. Oak Ridge: Oak Ridge National Laboratories, March 1976.

3. Brown, R.A. and H.L. Huffman, Jr. "Hydrocarbons in Open Ocean Waters." Science. February 1976. Vol. 191, pp. 847-849.

4. Hoffman, H. "Sulfur Split Among Products." Hydrocarbon Processing (February 1976). pp. 77-88.

5. Masek, Vaclav. "3,4-Benzopyrene in the Czech Fuel Industry." Reczniki Panstowego Zakladu Higo, Vol. 14, No. 5, (1963). pp. 461-465.

6. Nelson, W.L. Petroleum Refining Engineering. New York: McGraw-Hill Book Co., 1969.

7. Chemistry of Coal Utilization. Ed. by H.H. Lowry. New York: John Wiley & Sons, Inc., 1963.

8. Muder, R.E. "Light Oil and Other Products of Coal Carbonization." Chemistry of Coal Utilization, Ed. by H.H. Lowry. New York: John Wiley & Sons, Inc., 1963. pp. 539-579.

9. Environmental, Health, and Control Aspects of Coal Conversion: An Information Overview. Ed. by H.M. Braunstein, E.D. Copenhaver and H.A. Pfuderan, Oak Ridge: Oak Ridge National Laboratory, 1977.

10. Geschwind, O. and S. Hypta. "Analysis of Crude Oil from the Rybak Well." Nafta (Katowice) Vol. 20, No. 7 (1964). pp. 188-193.

11. Cleland, J.G. and G.L. Kingsbury. Multimedia Environmental Goals for Environmental Assessment, Vols. I and II. EPA-600/7-77-136a&b, U.S. Environmental Protection Agency, Research Triangle Park, North Carolina, 1977.

12. Coal Liquefaction. Quarterly Report, January-March 1977. DOE/ET-0026/1, U.S. Department of Energy, Division of Coal Conversion. Publication date December 1977.

13. Ferretti, E.J. "Coal Liquefaction Gains Prominence." Coal Mining and Processing, February 1976.

14. Bodle, W.W. and K.C. Vyas. "Clean Fuels from Coal." The Oil and Gas Journal, August 1974.

15. Carlson, F.B., et al. "The TOSCOAL Process - Coal Liquefaction and Char Production." Presented at the Clean Fuels From Coal Symposium I, Illinois Institute of Gas Technology Center, September 10-14, 1973.

16. Maddocks, R.R. and J. Gibson. "Supercritical Gas Extraction of Coal: An Examination of the Commercial Potential of the Process." In: Proceedings of the AIChE National Conference, 1976.

17. Kronseder, J.C. "Sasol-II: South Africa's Oil - from Coal Plant." Hydrocarbon Processing, July 1976. p. 56-F ff.

18. Koralek, C.S. and S.S. Patel. Environmental Assessment Data Base for Coal Liquefaction Technology: Volume I - Systems for Fourteen Liquefaction Processes. Prepared by Hittman Associates, Inc. for IERL-EPA, August 1978.

19. Yavorsky, Paul M. "Synthoil Process Converts Coal into Clean Fuel Oil." In: Proceedings of the Clean Fuels from Coal Symposium, Institute of Gas Technology, Chicago, Illinois, September 10-14, 1973. p. 9.

20. Cleland, J.G. and G.L. Kingsbury. Multimedia Environmental Goals for Environmental Assessment, Vol. I, EPA-600/7-77-136a, U.S. Environmental Protection Agency, Research Triangle Park, North Carolina. 1977. pp. 125, A-22 and D-11-15.

21. Hangebrauck, R.P. "Environmental Assessment Methodology for Fossil Energy Processes." In: Proceedings of the EPA Symposium on Environmental Aspects of Fuel Conversion Technology III, EPA-600/7-78-063, April 1978, Hollywood, Florida, September 13-16, 1977.

22. Jahnig, C.E. Evaluation of Pollution Control in Fossil Fuel Conversion Processes. Liquefaction: Section 3. H-Coal Process. EPA-650/2-74-009 M, U.S. Environmental Protection Agency, IERL. Research Triangle Park, North Carolina. 1975. p. 61.

23. Sass, A. "The Garrett Research and Development Company Process for the Conversion of Coal into Liquid Fuels." In: Proceedings of the 65th Annual Meeting, American Institute of Chemical Engineers, New York, New York, November 29, 1972.

24. Office of Fossil Energy. Coal Liquefaction. Quarterly Report. U.S. Energy Research and Development Administration, January-March 1976.

25. Friedman, Sam, Paul M. Yavorsky and Sayeed Akhtar. "The Synthoil Process." In: Clean Fuels from Coal, Symposium II, June 1975.

26. Akhtar, Sayeed, et al. "The Synthoil Process - Material Balance and Thermal Efficiency." In: Proceedings of the 67th Annual AIChE Meeting. New York, December 1976.

27. U.S. Energy Research and Development Administration. 1975. Architectural and Engineering Design of the Synthoil Process Development Unit. Prepared by Foster Wheeler Energy Corporation.

28. U.S. Department of the Interior, Bureau of Mines. Economic Analysis of Synthoil Plant. ERDA 76-35. November 1975.

29. White, Curt M. and John O. Newman. Chromatographic and Spectrometric Investigation of a Light Oil Produced by the Synthoil Process. Pittsburgh: Pittsburgh Energy Research Center, September 1976.

30. Sharkey, A.G., et al. Mass Spectrometric Analysis of Streams from Coal Gasification and Liquefaction Processes. Pittsburgh: Pittsburgh Energy Research Center, November 1975.

31. Akhtar, Sayeed. "Organic Sulfur Compounds in Coal Hydrogenation Products." In: Proceedings of the 65th National Meeting of the American Chemical Society, New York, March 1976.

32. Mentser, M., et al. Low Temperature Pyrolysis of Synthoil Centrifuged Solids. PERC/TPR-77/1. Prepared for ERDA by Pittsburgh Energy Research Center: Pittsburgh, PA, January 1977.

33. U.S. Coal Development - Promises, Uncertainties. Report to the Congress, September 22, 1977.

34. Johnson, C.A. et al. "Present Status of the H-Coal Process." In: Clean Fuel from Coal Symposium II, Institute of Gas Technology, IIT Center, Chicago, 1975, pp. 525-551.

35. U.S. Energy Research and Development Administration. 1976. H-Coal Commercial Evaluation: Conceptual Design and Economic Analysis for 25,000 Tons Per Day. H-Coal Liquefaction Plant, Part I, E (49-181)-2002. Prepared by Fluor Engineers and Constructors, Inc.

36. Kang, C.C. and P.H. Kydd. "The H-Coal Process." In: The Third International Conference on Coal Gasification and Liquefaction. University of Pittsburgh, 1976.

37. Office of Coal Research, Department of the Interior. 1968. Project H-Coal Report on Process Development. PB-234-579. Prepared by Hydrocarbon Research, Inc., Springfield, Virginia, NTIS.

38. U.S. Energy Research and Development Administration. 1977. Environmental Plan - H-Coal Pilot Plant. EX-76-C-01-2260. Prepared by Ashland Synthetic Fuels, Inc.

39. Gas Engineers Handbook. New York: Industrial Press, Inc., 1969.

40. Fant, B.T. EDS Coal Liquefaction Process Development - Phase III A, FE 2353-1. Prepared for ERDA by Exxon Research and Engineering Company: Baytown, Texas, July 1977.

41. U.S. Energy Research and Development. 1976. Fossil Energy Research Program of the Energy Research and Development Administration, ERDA 76-63.

42. Furlong, L.E., et al. "The Exxon Donor Solvent Process." Chemical Engineering Progress, August 1976. pp. 69-75.

43. Office of Coal Research. Project H-Coal Report on Process Development. OCR R&D No. 26 - Final. Prepared by Hydrocarbon Research Inc., Trenton, New Jersey, December 1968.

44. Karr, C., W.T. Abel and J.R. Comberiati. "Products from Two-Step Coal Liquefaction Using Three Different First-Step Reactor Packings." In: Proceedings of the 172nd National Meetings of the American Chemical Society, Division of Fuel Chemistry, San Francisco, California, August 29 - September 3, 1976.

45. Leonard, J.W., et al. Editors. Coal Preparation, 3rd Edition. Seeley W. Mudd Series. The American Institute of Mining, Metallurgical and Petroleum Engineers, Inc., New York, New York 1968.

46. Hecht, N.L. and D.S. Duvall. Characterization and Utilization of Municipal and Utility Sludges and Ashes, Utility Coal Ash, Vol. III - EPA 670/2-75-033C. Prepared for U.S. Environmental Protection Agency by University of Dayton Research Institute, Dayton, Ohio, May 1975.

47. U.S. Department of Interior. Demonstration Plant - Clean Boiler Fuels from Coal, Vol. II, R&D Report #82. Prepared by Ralph M. Parsons Company.

48. Gluskoter, H.J., et al. Trace Elements in Coal: Occurrence and Distribution, EPA-600/7-77-064. Prepared by Illinois State Geological Survey, Urbana, Illinois, Contract No. 68-02-1472 for EPA, June 1977.

49. Tein-Yung J., et al. "Characteristics of Wastewater Discharges from Coal-Fired Power Plants." In: Proceedings of the 31st Annual Industrial Waste Conference, May 4-6, 1976, Purdue University, West Lafayette, IN.

50. Higginson, G.W. "SRC Could Provide Three-way Approach to Mole Energy." Oil and Gas Journal, August 1, 1977. pp. 89-94.

51. Farnsworth, J.F., et al. "Clean Environment with Koppers-Totzek Process." In: Proceedings of the EPA Symposium on the Environmental Aspects of Fuel Conversion Technology, EPA-650/2-74-118, St. Louis, MO, May 1974. North Carolina: EPA, Research Triangle Park, October 1974.

52. Goldstein, D.J. and D. Yung. Water Conservation and Pollution Control in Coal Conversion Processes, EPA-600/7-77-065. Prepared for U.S. Environmental Protection Agency by Water Purification Association: Cambridge, Massachusetts, June 1977.

53. Menter, M., et al. Low-Temperature Pyrolysis of Synthoil Centrifuged Solids. Prepared for ERDA by Pittsburgh Energy Research Center: Pittsburgh, PA, January 1977.

54. Shreve, R.N., Editor. Chemical Process Industries, 3rd Edition. McGraw-Hill, New York, 1967.

55. U.S. Environmental Protection Agency. 1974. Development Document for Proposed Effluent Limitations Guidelines and New Source Performance Standards for the Steam Electric Power Generating Point Source Category, EPA 440/1-73-029. Prepared by EPA Effluent Guidelines Division.

56. Mendis, M. and L. Schultz, Environmental Residuals Coefficients for the Project Independence Evaluation System Model, EPA 68-01-2461. Prepared for U.S. Environmental Protection Agency by Hittman Associates, Inc., Columbia, Maryland, July 1976.

57. The Multimedia Environmental Control Engineering Handbook. Prepared for the U.S. Environmental Protection Agency, Research Triangle Park, North Carolina, October 1977. Unpublished.

58. Cheremisinoff, P.N. and R.A. Young. Pollution Engineering Practice Handbook. Ann Arbor Science Publishers, Ann Arbor, Michigan, 1976.

59. Patel, S.S. and K.J. Shields. Environmental Analysis of Combined Power Systems. Prepared for United Technologies Research Center by Hittman Associates, Inc., Columbia, Maryland, October 1977. Unpublished.

60. Perry, R.H. and C.H. Chilton. Chemical Engineers Handbook, 5th Edition, McGraw-Hill Book Co., 1973.

61. U.S. Environmental Protection Agency. Coal Preparation Environmental Engineering Manual, EPA 600/2-76-138, May 1976. Prepared for U.S. Environmental Protection Agency by J.J. Davis Association.

62. Cavanaugh, G.C., et al. Environmental Assessment Data Base for Low/Medium-Btu Gasification Technology: Volume II, Appendices A-F, EPA-600/7-77-125b, November 1977. Prepared for U.S. Environmental Protection Agency by Radian Corporation, Austin, Texas.

63. Robson, F.L. and W.A. Blecher. Fuel Gas Environmental Impact, EPA - 600/2-76-153. Prepared for U.S. Environmental Protection Agency by United Technologies Research Center, East Hartford, Connecticut.

64. Zubovic, P., T. Stadnichenko and N.B. Sheffey. Distribution of Minor Elements in Coal Beds of the Eastern Interior Region, U.S. Geological Survey Bulletin, 1117-B, 1964.

65. Zubovic, P., T. Stadnichenko and N.B. Sheffey, Geochemistry of Minor Elements in Coals of the Northern Great Plains Coal Province. U.S. Geological Survey Bulletin, 1117-A, 1961.

66. Zubovic, P., T. Stadnichenko and N.B. Sheffey, Distribution of Minor Elements in Coals of the Appalachian Region. U.S. Geological Survey Bulletin, 1117-C, 1966.

67. Filby, R.H. and C.A. Sautter. Application of Neutron Activations Analysis and Atomic Absorption Spectroscopy to Determination of Trace Elements in a Coal Liquefaction Process. A proposal submitted to Pittsburgh and Midway Coal Mining Co., Merriam, Kansas by Nuclear Radiation Center, Washington State University, Pullman, Washington, 1973.

68. Argonne National Laboratory. The Environmental Effects of Using Coal for Generating Electricity. NUREG-0252. Division of Site Safety and Environmental Analysis, U.S. Nuclear Regulatory Commission, 1977.

69. Given, P.H., et al. The Relation of Coal Characteristics to Coal Liquefaction Behavior, Report #2 submitted to the National Science Foundation (RANN Division) in connection with Grant No. GI-38974 and the Pennsylvania Science and Engineering Foundation under Agreement #216 by the College of Earth and Mineral Sciences of the Pennsylvania State University, 1974.

70. Ruch, R.R., H.J. Gluskoter and N.F. Shimp. Occurrence and Distribution of Potentially Volatile Trace Elements in Coal, EPA-650/2-74-054, July 1974. Urbana: Illinois State Geological Survey.

71. Zubovick, P., N.B. Sheffey and T. Stadnichenko. Distribution of Minor Elements in Some Coals in the Western and Southwestern Regions of the Interior Coal Province, U.S. Geological Survey Bulletin. 1117-D, 1967.

72. Busch, R.A., et al. Physical Property Data on Fine Coal Refuse. U.S. Bureau of Mines, Report of Investigations, 8062, 1975.

73. O'Gorman, J.V. and P.L. Walker, Jr. "Mineral matter Characteristics of Some American Coals." Fuel, Vol. 50, No. 2 (1971). pp. 135-51.

74. O'Gorman, J.V. and P.L. Walker, Jr. Mineral Matter and Trace Elements in U.S. Coals. U.S. Department of Interior, Office of Coal Research, Research and Development Report No. 61, Interim Report No. 2, 1972.

75. Hildebrand, S.G., R.M. Cushman and J.A. Carter. "The Potential Toxicity and Bioaccumulation in Aquatic Systems of Trace Elements Present in Aqueous Coal Conversion Effluents." In: Proceedings of the University of Missouri's 10th Annual Conference on Trace Substances in Environmental Health. Ed. by D.D. Hemphill.

76. Bowen, H.J.M. Trace Elements in Biochemistry. New York: Academic Press, 1966.

77. Lisk, D.J. "Trace Metal in Soils, Plants, and Animals." Advance in Agronomy, Vol. 24, Ed. by N.C. Brady, New York: Academic Press, 1972. pp. 267-325.

78. Vaughan, B.E., et al. Review of Potential Impact on Health and Environmental Quality from Metals Entering The Environment as a Result of Coal Utilization. A Battelle Energy Program Report, Pacific Northwest Laboratories, Battelle Memorial Institute, Richland, Washington, 1975.

79. Toxic Pollutant Profiles. Hittman 1977. Unpublished information submitted to the U.S. Environmental Protection Agency under Contract No. 77-43-302073.

80. Horovitz, C.T., H.H. Schlock and L.A. Horovitz-Kisimova. "The Content of Scandium, Thorium, Silver, and Other Trace Elements in Different Plant Species." Plant and Soil, Vol. 40 (1974). pp. 397-403.

81. Griffin, R.A., et al. "Solubility and Toxicity of Potential Pollutants in Solid Coal Wastes." In: Proceedings of the EPA Symposium on the Environmental Aspects of Fuel Conversion Technology III (September 1977, Hollywood, Florida) EPA-600/7-78-063, April 1978.

82. Dailey, N.S. "Process Effluents: Quality and Control Technologies." Environmental, Health, and Control Aspects of Coal Conversion: An Information Overview, Ed. by H.M. Braustein, E.D. Copenhaver and H.A. Pfuderan. Information Center Complex, Oak Ridge: Oak Ridge National Laboratory 1977.

83. Herbes, S.E., G.R. Southworth and C.W. Gehrs. "Organic Contaminants in Aqueous Coal Conversion Effluents: Environmental Consequences and Research Priorities." In: Proceedings of the University of Missouri's 10th Annual Conference on Trace Substances in Environmental Health, Ed. by D.D. Hemphill, Columbia, MO, 1976.

84. Jahnig, C.E. and R.R. Bertrand. "Environmental Aspects of Coal Gasification." Chemical Engineering Progress, Vol. 72, 1976. pp. 51-56.

85. Shultz, H., et al. The Distribution of Some Trace Elements in the 0.5 Ton Per Day Synthoil Process Development Unit PERC/RI-77/A. Pittsburgh Energy Research Center, February, 1977.

86. Associated Water and Air Resources Engineers, Inc., Treatment Investigations and Process Design for the H-Coal Liquefaction Wastewater. Unpublished Report. December, 1976.

87. Dailey, G.A. "Microbial Interaction." Environmental, Health, and Control Aspects of Coal Conversion: An Information Overview, Vol. 2, Ed. by H.M. Braustein, E.D. Copenhaver and H.A. Pfuderan. Information Center Complex, Oak Ridge: Oak Ridge National Laboratory, 1977.

88. Olsen, R.A. and G. Warren. "Aquatic Pollution Potential of Fly Ash Particles." Toxic Effects on the Aquatic Biota from Coal and Oil Shale Development Progress Report - Year 1, Ed. by R.V. Thurston, R.K. Skogerboe and R.C. Russo. Internal Project Report #9. Natural Resources Ecology Laboratory, Fort Collins, Col: Colorado State University, 1976.

89. Argonne National Laboratory. The Environmental Effects of Using Coal for Generating Electricity, NUREG-0252. Division of Site Safety and Environmental Analyses, U.S. Nuclear Regulatory Commission, 1977.

90. Fulkerson, W., et al. Biomedical and Environmental Research in Support of Coal Conversion Technology, Oak Ridge: Oak Ridge National Laboratory, 1974.

91. Jahnig, C.E. and E.M. Magee. Evaluation of Pollution Control in Fossil Fuel Conversion Processes Gasification: Section I. CO_2 Acceptor Process. NTIS, PB-241-141. 1974.

92. Cuffe, S.T., et al. "Air Pollution Emissions from Coal-fired Power Plants." Journal Air Pollution Control Association, Vol. 14 (1964). p. 353.

93. Fling, R.B., et al. Disposal of Flue Gas Cleaning Wastes. EPA Shawnee Field Evaluation. Initial Report. U.S. Environmental Protection Agency. EPA 600/2-76-700-1-130, 1976.

94. Freudenthal, R.I., G.A. Lutz and R.J. Michell. Carcinogenic Potential of Coal and Coal Conversions Products. Columbus: Battelle Columbus Laboratories, 1975.

95. Chemistry of Coal Utilization. Ed. by H.H. Lowry. New York: John Wiley & Sons, Inc., 1963.

96. Karr, C., Jr. "Low Temperature Tar." Chemistry of Coal Utilization, Ed. by H.H. Lowry. New York: John Wiley & Sons, Inc., 1963. pp. 539-579.

97. Hydrocarbon Research, Incorporated. Project H-Coal Report on Process Development. P.B. 234-576. OCR/RDR 26/Final. 1968.

98. Wallcave, L., et al. "Skin Tumorigenesis in Mice by Petroleum Asphalts and Coal Tar Pitches of Known Polynuclear Aromatic Hydrocarbon Content." Toxicology and Applied Pharmacology, Vol. 18 (1971). pp. 41-52.

99. Muder, R.E. "Light Oil and Other Products of Coal Carbonization." Chemistry of Coal Utilization, Ed. by H.H. Lowry. New York: John Wiley & Sons, Inc., 1963. pp. 539-579.

100. Masek, Vaclav. "3,4-Benzopyrene in the Czech Fuel Industry." Reczniki Pansteowego Zakladu Higo, Vol. 14, No. 5 (1963). pp. 461-465.

101. Environmental, Health, and Control Aspects of Coal Conversion: An Information Overview, Ed. by H.M. Braunstein, E.D. Copenhaver and H.A. Pfuderan. ORNL/EIS-94, Oak Ridge: Oak Ridge National Laboratory, 1977.

102. Sharkey, A.G. "Mass Spectrometric Analysis of Process Streams for Coal-Derived Fuels." Carcinogenesis: A Comprehensive Survey. Vol. I - Polynuclear Aromatic Hydrocarbons, Chemistry, Metabolism and Carcinogenesis. New York: Raven Press. 1976.

103. Shultz, W.D. Preliminary Results: Chemical and Biological Examination of Coal-derived Materials. Oak Ridge: Oak Ridge National Laboratory, pub. ORNL/NSF/EATC-18, 1976.

104. Kubota, H., W.H. Griest and M.R. Guerin. "Determination of Carcinogens in Tobacco Smoke and Coal-derived Samples - Trace Polynuclear Aromatic Hydrocarbons." Trace Substances In Environmental Health, Vol. 9, (1975), pp. 281-89.

105. Hangebrauck, R.P., D.J. Von Lehmden and J.E. Meeker. "Emissions of Polynuclear Hydrocarbons and Other Pollutants from Heat Generation and Incineration Processes." Journal of Air Pollution Control Association, Vol. 14, No. 7 (1964). pp. 267-278.

106. Goeckner, N.A. and W.H. Griest. "Determination of Methyl Chrysenes in a Coal Liquefaction Product." The Science of the Total Environment. Vol. 8 (1977). pp. 187-93.

107. Bazelman, et al. Study of Options for Control of Emission from an Existing Coal-fired Electric Power Station. Oak Ridge: Oak Ridge National Laboratory, 1973.

108. Hoffman, H. "Sulfur Split Among Products." Hydrocarbon Processing (February 1976). pp. 77-88.

109. Weast, R.C., Selby, S.M. and Hodgman, C.D. Handbook of Chemistry and Physics, Cleveland, Ohio: The Chemical Rubber Co., 1964.

110. Mackay, D. and A.W. Wolkoff. "Rate of Evaporation of Low-solubility Contaminants from Water Bodies to Atmosphere." Environmental Science Technology, Vol. 7, No. 7 (1973). pp. 611-614.

111. Lee, R.F. "Fate of Petroleum Hydrocarbons in Marine Zooplankton." In: Proceedings of the Conference on Prevention and Control of Oil Pollution, Washington: American Petroleum Institute, 1975. pp. 549-553.

112. Radding, S.B., et al. The Environmental Fate of Selected Polynuclear Aromatic Hydrocarbons. EPA-560/5-75-09; Prepared for U.S. Environmental Protection Agency by Stanford Research Institute; Menlo Park, 1976.

113. Hutchinson, T.C. and L.M. Whitby. "The Effects of Acid Rainfall and Heavy Metal Particulates on a Boreal Forest Ecosystem near the Sudbury Smelting Region of Canada." Water, Air and Soil Pollution, Vol. 7 (1977). pp. 421-438.

114. McCall, R.B. Fundamental Statistics for Psychology. Harcourt, Brace, and World, Inc., New York, New York, 1970. p. 116.

115. Markham, M.C., et al. "Photochemical Properties of Antimony Trioxide." Journal of Physical Chemistry, Vol. 62, No. 8, (1958). pp. 989-992.

116. Garis, J. and J.F. Ferguson. "Cycling of Mercury through the Environment." Water Research. Vol. 6 (1972). 989-1008.

117. U.S. Environmental Protection Agency. Scientific and Technical Data Base for Criteria and Hazardous Pollutants, 1975 ERC/RTP Review. NTIS-PB-253942. 1976.

118. Abeles, F.B., et al. "Fate of Air Pollutants: Removal of Ethyzlene, Sulfur Dioxide, and Nitrogen Dioxide by Soil." Science, Vol. 173 (1971). pp. 914-916.

119. Thurston, R.V., R.K. Skogerboe and R.C. Russo. Toxic Effects on the Aquatic Biota from Coal and Oil Shale Development. Internal Project Report No. 9 of the Natural Resource Ecology Laboratory, Colorado State University, Fort Collins, Colorado, 1976.

120. Braunstein, H.M., E.D. Copenhaver and H.A. Pfuderan (Eds). Environmental, Health, and Control Aspects of Coal Conversion: An Information Overview. Vol. 1. Oak Ridge: Oak Ridge National Laboratory, 1977.

121. Wewerka, E.M., et al. "Environmental Contamination from Trace Elements in Coal Preparation Wastes." A Literature Review and Assessment. ERDA LA-6600-MS. 1976.

122. Klevens, H.B. "Solubilization of Polycyclic Hydrocarbons." Journal of Physical Chemistry, Vol. 58 (1950), pp. 283-298.

123. Davis, W.W., M.E. Krahl and G.H.A. Clowes. "Solubility of Carcinogenic and Related Hydrocarbons in Water." Journal of American Chemical Society, Vol. 64 (1942). pp. 108-110.

124. Eganhouse, R.P. and J.A. Calder. "The Solubility of Medium Molecular Weight Aromatic Hydrocarbons and the Effects of Hydrocarbon Co-solutes and Salinity." Geochimica et Cosmochimica Acta, Vol. 40 (1976). pp. 555-561.

125. Woolson, E.A. "Bioaccumulation of Arsenicals." Arsenical Pesticides. Washington: American Chemical Society. pp. 97-107.

126. Uthe, J.F. and J. Reinke. "Arsenate Ion Reduction in Non-living Biological Materials." Environmental Letters, Vol. 10, No. 2 (1975). pp. 83-88.

127. Boulin, D.R., et al. "Losses of Inorganic Nitrogen from Aquatic Systems." Journal of Environmental Quality, Vol. 3, No. 2 (1974). p. 107.

128. Lee, R.F. and J.W. Anderson. "Fate and Effect of Naphthalenes: Controlled Ecosystem Pollution Experiment." Bulletin of Marine Science, Vol. 27, No. 1 (1977). pp. 127-134.

129. Cox, B.A., J.W. Anderson and J.C. Parker. "An Experimental Oil Spill: The Distribution of Aromatic Hydrocarbons in the Water, Sediment, and Animal Tissues within a Shrimp Pond." In: Proceedings of Conference on Prevention and Control of Oil Pollution. San Francisco, March 25-27, 1975. Washington: American Petroleum Institute, 1975.

130. Roescjadi, G.D., D.L. Woodruff and J.W. Anderson. BioAvailability of Naphthalenes from Marine Sediments Artifically Contaminated with Prudhoe Bay Crude Oil. Sequim, WA: Battelle, Pacific Northwest Division, Marine Research Laboratory, 1977.

131. Herbes, S.E. "Partitioning of Polycyclic Aromatic Hydrocarbons between Dissolved and Particulate Phases in Natural Water." Water Research, Vol. 11 (1977). pp. 493-496.

132. Andelman, J.B. and J.E. Snodgrass. "Incidence and Significance of Polynuclear Aromatic Hydrocarbons in the Water Environment." CRC-Critical Review in Environmental Control, Vol. 4 (1974). pp. 69-83.

133. Andelman, J.B. and M.J. Suess. "The Photodecomposition of 3,4-Benzpyrene Sorbed on Calcium Carbonate. In: Organic Compounds in the Aquatic Environment. Ed. by S.D. Faust and J.V. Hunter. New York: Marcel Dekker Inc., 1971.

134. Ross, R.H. "Enviromental Interactions." In: Environmental, Health, and Control Aspects of Coal Conversion: An Information Overview. Vol. 2, Ed. by H.M. Braunstein, E.D. Copenhaver and H.A. Pfuderan. Oak Ridge Information Center Complex, Oak Ridge National Laboratory, 1977.

135. Cavanaugh, G., C.E. Burklin and J.C. Dickerson. Potentially Hazardous Emissions from Extraction and Processing of Coal and Oil. Battelle Columbus Laboratories. EPA 68-02-1323, April 1975.

136. Gehrs, C.W. "A Conceptual Approach to Evaluating Liquid Effluents from Synthetic Fuel Processes." Preprint: In: Proceedings of Symposium on Management of Residuals from Synthetic Fuels Production. Denver Research Institute, May 23-27, 1976.

137. Fowler, S.W. and G. Benayoun. "Experimental Studies on Cadmium Flux through Marine Biota." Comparative Studies of Food and Environmental Contamination, Vienna: International Atomic Energy Agency, 1974.

138. Parris, G.E. and F.E. Brinckman. "Reactions Which Relate to Environmental Mobility of Arsenic and Antimony. II: Oxidation of Trimethylarsine and Trimethylstibine." Environmental Science and Technology, Vol. 10, No. 12 (1976). pp. 1128-1133.

139. Environmental Protection Agency. 1976. Arsenic. National Academy of Sciences, Washington, DC. July 1977.

140. Fishbein, L. Second Task Force on Research Planning in Environmental Health Science Background Document Metals and Metalloids: Mercury, Lead, Cadmium, Arsenic and Selenium. National Institute of Environmental Health, Research Triangle Park, NC, 1976.

141. Wong, P.T.S., Y.K. Chau and P.L. Luxon. "Methylation of Lead in the Environment." Nature, Vol. 253, No. 1, pp. 263-264.

142. Woolson, E.A. "Organoarsenical Herbicides." Arsenical Pesticides. Washington: American Chemical Society, pp. 741-776.

143. Schulz-Baldes, M. "Lead Uptake from Sea Water and Food, and Lead Loss in the Common Mussel Mytilus edulis." Marine Biology, Vol. 25 (1974). pp. 177193.

144. Environmental Protection Agency. 1976. Literature Study of Selected Potential Environmental Contaminants. Antimony and its Compounds. EPA 560/276-002. Office of Toxic Substance.

145. Felicetti, S.A., R.G. Thomas and R.O. McClellan. "Metabolism of Two Valence States of Inhaled Antimony in Hamsters." American Industrial Hygiene Association Journal, Vol. 35, No. 5 (1974), pp. 292-299.

146. Talmage, S.S. "Humans: Metabolism and Biological Effects." In: Environmental, Health, and Control Aspects of Coal Conversion: An Information Overview Vol. 2. Information Center Complex, Oak Ridge: Oak Ridge National Laboratory, 1977.

147. Schroeder, H.A. The Poisons Around Us. Bloomington, IN: Indiana University Press, 1974.

148. Wilkes, D.J. "Animals: Bioenvironmental Effects." In: Environmental, Health, and Control Aspects of Coal Conversion: An Information Overview, Vol. 2. Oak Ridge National Laboratory, Oak Ridge, 1977.

149. Environmental Protection Agency. 1976. Office of Toxic Substances. Summary Characteristics of Selected Chemicals of Near-Term Interest. EPA-560/4-76-004, Washington, DC.

150. Henkin, R.I., J.R. Marshall and S. Meret. "Maternal-fetal Metabolism of Copper and Zinc at Term." American Journal of Obstetrics and Gynecology, Vol. 110, No. 1 (1971). pp. 131-134.

151. Filip, D.S. and R.F. Lynn. "Mercury Accumulation by the Fresh Water Alga. Chemosphere, Vol. 9 (1972). pp. 251-254.

152. Lovejoy, H.B., Z.G. Bell, Jr. and T.R. Visina. "Mercury Exposure Evaluations and their Correlation with Urine Mercury Excretions." Journal of Occupational Medicine, Vol. 15, No. 7 (1973). pp. 590-591.

153. Cheng, L., G.V. Alexander and P.J. Franco. "Cadmium and Other Metals in Seaskaters." Water, Air, and Soil Pollution, Vol. 6 (1976). pp. 33-38.

154. National Academy of Science. 1975. Medical & Biological Effects of Environmental Pollution - Nickel. Washington, DC.

155. Environmental Protection Agency. 1975. Preliminary Investigation of Effects on the Environment of Boron, Indium, Nickel, Selenium, Tin, Vanadium and their Compounds. Volume IV: Selenium. EPA, Washington, DC.

156. Browning, E. Toxicity of Industrial Metals. New York: Appleton-Century-Crofts, 1969.

157. Polikarpov, G.G. Radioecology of Aquatic Organisms. New York: Reinhold Book Division, 1966.

158. Mason, J.W., J.H. Cho and A.C. Anderson. "Uptake and Loss of Inorganic Mercury in the Eastern Oyster (Crassostrea virginica)." Archives of Environmental Contamination. Vol. 4, (1976). pp. 361-376.

159. Po-Yung Lu, et al. "Model Ecosystem Studies of Lead, and Cadmium and of Urban Sewage Sludge Containing These Elements." Journal of Environmental Quality, Vol. 4, No. 4 (1975). pp. 505-509.

160. Paschal, D.C. and W. McNamara. "Uptake of Cadmium and Nickel by Salvania." Vol. 68, No. 2 (1975). pp. 132-135.

161. Greig, R.A., D.R. Wenzloff and J.B. Pearce. "Distribution and Abundance of Heavy Metals in Finfish, Invertebrates and Sediments Collected at a Deepwater Disposal Site." Marine Pollution Bulletin, Vol. 7 No. 10 (1976). pp. 185-187.

162. Van Hook, R.I. "Cadmium, Lead, and Zinc Distributions between Earthworms and Soils: Potential for Biological Accumulation." Bulletin of Environmental Contamination and Toxicology, Vol. 12, No. 4 (1974). pp. 509-512.

163. Gordon, C.C. "Effects of Air Pollution on Indigenous Animals and Vegetation." Helena Valley Environmental Pollution Study. pp. 95-112.

164. Ireland, M.P. "The Effect of the Earthworm, Dendrobaena rubida on the Solubility of Lead, Zinc, and Calcium in Heavy Metal-Contaminated Soil in Wales." Journal of Soil Science, Vol. 26, No. 3 (1975). pp. 313-318.

165. Subramanian, V. and B. D'Anglejean. "Water Chemistry of the St. Lawrence Estuary." Journal of Hydrology. Vol. 29 (1976). pp. 341-354.

166. Dietz F. "The Enrichment of Heavy Metals on Submerged Plants." In: Proceedings of the Advances in Water Pollution Research. 6th International Conference in Jerusalem, 1972, Ed. S.H. Jenkins. New York: Pergamon Press, 1973. pp. 53-63.

167. Emerson, R., et al. "Heavy Metal Concentrations in Marine Organisms Collected near an Industrial Waste Outfall." Institute of Electrical and Electronics Engineers, Inc., 1976. pp. 1-5.

168. Gish, C.D. and R.E. Christensen. "Cadmium, Nickel, and Zinc in Earthworms from Roadside Soils." Environmental Science and Technology, Vol. 7, No. 11 (1973). pp. 1060-1062.

169. Peden, J.D., J.H. Crothers, C.E. Waterfall and J. Beasley. "Heavy Metals in Somerset Marine Organisms." Mar. Poll. Bull., Vol. 4 (1973). pp. 7-9.

170. Krauskopf, K. "Factors Controlling the Concentration of Thirteen Rare Metals in Seawater." Geochimica et Cosmochimica Acta, Vol. 9 (1956). pp. 1-32B.

171. Martin, M.H. and P.J. Coughtrey. "Comparison between the Levels of Lead, Zinc, and Cadmium within a Contaminated Environment." Chemosphere, Vol. 1 (1976). pp. 15-20.

172. Saward, D., A. Stirling and G. Topping. "Experimental Studies on the Effects of Copper on a Marine Food Chain." Marine Biology, Vol. 29 (1975). pp. 351-361.

173. Baptist, J.P. and C.W. Lewis. "Transfer of ^{65}Zn and ^{51}Cr through an Estuarine Food Chain." In: Symposium on Radioecology, Ann Arbor, 1967. Ed. by D.J. Nelson and F.C. Evans. U.S. Department of Commerce, CONF-670503 1969. pp. 420-430.

174. Huckabee, J.W. and B.G. Blaylock. "Transfer of Mercury and Cadmium from Terrestrial to Aquatic Ecosystems." In: Metal Ions in Biological Systems. Ed. by S.K. Dhar. Plenum Publishing Corp. pp. 125-159.

175. Bastian, R.K. and W.B. Jackson. "^{137}Cs and ^{60}Co in a Terrestrial Community at Enewetak Atoll." Radioecology and Energy Resources. In: Proceedings of the Fourth National Symposium on Radioecology, Oregon State University, Corvalis, Oregon, May 12-14, 1975. Ed. by C.E. Cushing et al., Dowen, Hutchinson, and Ross, Inc., Stroudsburg, PA. 1976.

176. Mathis, B.J. and T.F. Cummings. "Selected Metals in Sediments, Water, and Biota in the Illinois River." Journal of Water Pollution Control Federation. Vol. 7, pp. 1573.

177. McDermott, D.J., G.V. Alexander, D.R. Young, and A.J. Mearns. "Metal Contamination of Flatfish around a Large Submarine Outfall." Journal of Water Pollution Control Federation, Vol. 48, No. 8 (1976). pp. 1913-1918.

178. Environmental Protection Agency. 1975. Preliminary Investigation of Effects on the Environment of Boron, Indium, Nickel, Selenium, Tin, Vanadium, and their Compounds. Volume III. Nickel. Office of Toxic Substances. EPA-560/2-75-005C.

179. National Academy of Sciences. Particulate Polycyclic Organic Matter. Committee on Biological Effects of Atmospheric Pollutants Division of Medical Sciences. Washington: National Research Council, 1972.

180. Metcalf, R.L. and J. R. Sanborn. "Pesticides and Environmental Quality in Illinois." Illinois Natural History Survey Bulletins, Vol. 314, No. 9 (1975). pp. 381-436.

181. Niaussat, P. and C. Auger. "Mise en Evidence et Repartition du Benzo-3-4-Pyrene et du Perylene Chez Differents Organisms de la Biocoenose Lagunaire de Clipperton." C.R. Academic des Sceinces (Paris) Comptes Rendus. Hebdomadaires des Seances. Vol. 270, (1970). pp. 2702-2705.

182. Schalit, L.M. and K.J. Wolfe. "SAM/IA: A Rapid Screening Method for Environmental Assessment of Fossil Energy Process Effluents. EPA-600/7-78-015. U.S. Environmental Protection Agency, Research Triangle Park, NC, 1978.

183. Howell, J. McC., et al. "Chronic Copper Poisoning and Changes in the Central Nervous System of Sheep." Acta Neuropathology, Vol. 29, No. 9. (1974).

184. Chapman, G.A. Toxicity of Copper, Cadmium and Zinc to Pacific Northwest Salmonids. National Water Quality Laboratory, U.S. Environmental Protection Agency, Interim Report, Task 002 ROAP IOCAR, Corvallis, OR, 1975.

185. Mount, D.I. and C.E. Stephan. "Chronic Toxicity of Copper to the Fathead Minnow (Pimephales promelas) in Soft Water." J. Fish Res. Board Can., Vol. 26, No. 9 (1969). pp. 2449-2457.

186. Mount, D.I. "Chronic Toxicity of Copper to Fathead Minnows." Water Research, Vol. 2, (1968). pp. 215-223.

187. Brungs, W.A., J.R. Geckler and M. Gast. "Acute and Chronic Toxicity of Copper to the Fathead Minnow in a Surface Water of Variable Quality." Water Research, Vol. 10, (1976). pp. 37-43.

188. Christensen, G.M., et al. "Changes in the Blood of the Brown Bullhead (Ictalurus nebulosus (Lesueur)) following Short- and Long-term Exposure to Copper (II)." Toxicology and Applied Pharmacology, Vol. 23, (1972).

189. Neelakantan V. and B.V. Mehta. "Studies on Copper Deficiency and Toxicity Symptoms in Some Common Crops of Gujarat (India)." Journal of Agricultural Science, Vol. 53, No. 3 (1961), pp. 293-298.

190. Norvell, M.J., et al. "Some Effects of High Dietary Levels of Various Salts of Copper in Broiler Chickens." Trace Substances in Environmental Health, Vol. 8 (1974). pp. 367-372.

191. Ferm, V.H. and D.P. Hanlon. "Toxicity of Copper Salts in Hamster Embryonic Development." Biology of Reproduction, Vol. 11, No. 1 (1974), pp. 97-101.

192. Gopinath, C., G.A. Hall and J. McC. Howell. "The Effect of Chronic Copper Poisoning on the Kidneys of Sheep." Research in Veterinary Science, Vol. 16, No. 1 (1974). pp. 57-69.

193. Drummond, R.A., W.A. Spoor and G.F. Olson. "Some Short-term Indicators of Sublethal Effects of Copper on Brook Trout (Salvelinus fontinalis)." J. Fish Res. Board Can., Vol. 30, No. 5 (1973), pp. 698-701.

194. Kopp, J.F. and R.C. Kromer. Trace Metals in Waters of the United States. Washington: U.S. Department of the Interior, 1967.

195. Furst, A., M. Schlauder and D.P. Sasmore. "Tumorigenic Activity of Lead Chromate." Cancer Research, Vol. 36, No. 5, (1976). pp. 1779-1783.

196. Payne, W.W. "Production of Cancers in Mice and Rats by Chromium Compounds." Archives of Industrial Health, Vol. 21, (1960). p. 530.

197. Kornreich, M.R. Coal Conversion Processes: Potential Carcinogenic Risk. MITRE Technical Report (MTR-7155 Rev. 1) Prepared for the Department of the Interior by MITRE Corp.: McLean, VA 1976.

198. Mancuso, T.F. and W.C. Hueper. "Occupational Cancer and other Health Hazards in a Chromate Plant." Industrial Medicine and Surgery, Vol. 20 (1951). pp. 358-363.

199. Medical Inspectorate of Factories. "Chrome Plating and Anodic Oxidation." Journal of Industrial Hygiene., Vol. 12 (1930). p. 314.

200. Mearns, A.J., et al. "Chromium Effects on Coastal Organisms." Journal of Water Pollution Control Federation, Vol. 48, No. 8 (1976), pp. 1929-1939.

201. Environmental Research Development Association. 1976. Carcinogens Relating to Coal Conversion Processes, FE22-13-1.

202. Stokes, R.M. and P.O. Fromm. "Effect of Chromate on Glucose Transport by the Gut of Rainbow Trout." Physiological Zoology, Vol. 38, No. 3 (1965), pp. 202-205.

203. Fromm, P.O. and R.M. Stokes. "Assimilation and Metabolism of Chromium by Trout." Journal of Water Pollution Control Federation, Vol. 34, No. 11 (1962), pp. 1151-1155.

204. Holcombe, G.W., et al. "Long-term Effects of Lead Exposure on Three Generations of Brook Trout." J. Fish Res. Board Can., Vol. 29, No. 12 (1972), pp. 1691-1700.

205. Biesinger, K.E. and G.M. Christensen. "Effect of Various Metals on Survival Growth, Reproduction, and Metabolism of Daphnia magna." J. Fish. Res. Board Can., Vol. 29, No. 12 (1972), pp. 1691-1700.

206. Furst, A., M. Schlauder and D.P. Sasmore. "Tumorigenic Activity of Lead Chromate." Cancer Research, Vol. 36, No. 5, (1976), pp. 1779-1783.

207. Boyland, E., et al. "The Induction of Renal Tumors by Feeding Lead Acetate to Rats." British Journal of Cancer., Vol. 16 (1962), pp. 283-288.

208. Stoner, G.D., et al. "Test for Carcinogenicity of Metallic Compounds by the Pulmonary Response in Strain A Mice." Cancer Research, Vol. 36, No. 5 (1976), pp. 1744-1747.

209. Lebedeva, G.D. "Effect of Beryllium Chlordie on Aquatic Organisms." Zool Zh., Vol. 39 (1960), pp. 1779-1782.

210. Stokinger, H.E., et al. "Acute Inhalation Toxicity of Beryllium: I. Four Definitive Studies of Beryllium Sulfate at Exposure Concentrations of 100, 50, 10, and 1 mg. per Cubic Meter." AMA Archives of Industrial Hygiene and Occupational Medicine, Vol. 1, No. 4 (1950), pp. 379-397.

211. DeNardi, J.M. "Long-term Experience with Beryllium Disease." AMA Archives of Industrial Health, Vol. 19 (1959), pp. 110-116.

212. Clary, J.J., C.R. Hopper and H.E. Stockinger. "Altered Adrenal Function as an Inducer of Latent Chronic Beryllium Disease." Toxicology and Applied Pharmacology, Vol. 23 (1972), pp. 365-375.

213. Stokinger, H.E. "Experimental Toxicology." The Toxicology of Beryllium, Ed. by I.R. Tabershaw. U.S. Department of Health, Education, and Welfare. National Institute of Occupational Safety and Health, 1972. pp. 17-32.

214. Reeves, R.L. "The Toxicology of Arsenic-noncarcinogenic Effects." Health Effects of Occupational Lead and Arsenic Exposure: A Symposium. Ed. by B.W. Carnow. HEW Pub. No. (NIOSH) 76-134, 1975.

215. Hood, R.D. "Effects of Sodium Arsenite on Fetal Development." Bulletin of Environmental Contamination and Toxicology, Vol. 7, No. 4 (1972), pp. 216-222.

216. Holmberg, R.E. and V.H. Ferm. "Interrelationships of Selenium, Cadmium, and Arsenic in Mammalian Tumorigenesis." Archives of Environmental Health, Vol. 18 (1969), pp. 873-877.

217. Robinson, E.L. "Arsenic in Soil with Five Annual Applications of MSMA." Weed Science, Vol. 23, No. 5 (1975). pp. 341-343.

218. Bittell, J.E., D.E. Koeppe and R.J. Miller. "Sorption of Heavy Metal Cations by Corn Mitochondria and the Effects on Electron and Energy Transfer Reactions." Physiological Plant, Vol. 30 (1974), pp. 226-230.

219. Lucero, H.A., C.S. Andreo and R.H. Vallejos. "Sulfhydryl Groups in Photosynthetic Energy Conservation. III. Inhibition of Photophosphorylation in Spinach Chloroplasts by $CdCl_2$." Plant Sci. Lett., Vol. 6, No. 5 (1976), pp. 309-313.

220. Krasovskii, G.N., S.P. Varshavskaya and A.I. Borisov. "Toxic and Gonadotropic Effects of Cadmium and Boron Relative to Standards for these Substances in Drinking Water." Environmental Health Perspectives, Vol. 13 (1976), pp. 69-75.

221. Ball, I.R. "The Toxicity of Cadmium to Rainbow Trout (Salmo gairdnerii Richardson)" Water Research, Vol. 1 (1967), pp. 805-806.

222. Benoit, D.A., et al. "Toxic Effects of Cadmium on Three Generations of Brook Trout (Salvelinus fontinalis)." American Fish Society Transaction, Vol. 4 (1976), pp. 550-560.

223. Sonawane, B.R., et al. "Placental Transfer of Cadmium in Rats: Influence of Dose and Gestational Age." Environmental Health Perspective, Vol. 12 (1975), pp. 79-102.

224. Sunderman, F.W., et al. "Nickel Poisoning." Archives of Industrial Health, Vol. 16 (1957), pp. 480-485.

225. Abou-Donia, M.B. and D.B. Menzel. Fish Brain Cholinesterases, Its Inhibition by Carbamates and Automatic Assay. Comparative Biochemistry and Physiology, Vol. 21 (1967), pp. 99-108.

226. Morrill, J.B. "Morphological Effects of Cobaltous Chloride on the Development of Limnaea stagnalis and Limnaea palustris." Biological Bulletin, Vol. 125, No. 3 (1963), pp. 508-522.

227. Timourian, H. and G. Watchmaker. "Nickel Uptake by Sea Urchin Embryos and their Subsequent Development." Journal of Experimental Zoology, Vol. 182, No. 3 (1972), pp. 379-387.

228. Sunderman, F.W., J.R, and R.M. Maenza. "Comparisons of Carcinogenicities of Nickel Compounds in Rats." Res. Comm. Chem. Pathol. Pharmacol., Vol. 14, No. 2 (1976), pp. 319-330.

229. Ambrose, A.M., et al. "Long-term Toxicologic Assessment of Nickel in Rats and Dogs. Journal of Food Science Technol. Mysore, Vol. 13, No. 4 (1976), pp. 181-187.

230. Webb, M. and S. M. Weinzierl. "Uptake of $^{63}Ni^{2+}$ from Its Complexes with Proteins and other Ligands by Mouse Dermal Fibroblasts in Vitro." British Journal of Cancer, Vol. 26 (1972), pp. 292-298.

231. Nielsen, F.H. "Essentiality and Function of Nickel." Trace Element Metabolism in Animals-2. Ed. by W.G. Hoekstra, J.W. Suttie, H.E. Ganther, W. Mertz. University Park Press, 1973, pp. 381-392.

232. Soane, B.D. and D.H. Saunder. "Nickel and Chromium Toxicity of Serpentine Soils in Southern Rhodesia. Soil Science, Vol 88, No. 6 (1959), pp. 322-330.

233. Stumm, W. and J.S. Morgan. Aquatic Chemistry. Wiley Interscience, New York, New York, 1970.

234. Environmental Protection Agency. 1976. Quality Criteria for Water. EPA-440/9-76-023. Washington, DC.

235. Pickering, Q.H. "Chronic Toxicity of Nickel to the Fathead Minnow." Journal of Water Pollution Control Federation, Vol. 46 (1976), p. 766.

236. Garham, J.A., et al. "Effect of Nickel Chloride on Primary Antibody Production in the Spleen." Environmental Health Perspectives, (1975), pp. 109-116.

237. Mogilevskaya, O. Ya. "Nickel." Toxicology of the Rare Metals. U.S. Atomic Energy Commission. Washington, DC., 1967. pp. 100-110.

238. Ellis, M.M., et al. "Selenium Poisoning in Fishes." In: Proceedings of Society for Experimental Biology and Medicine, Vol. 36 (1937), pp. 519-522.

239. Franke, K.W., et al. "Monstrosities Produced by Injection of Selenium Salts into Eggs." Anatomical Record, Vol. 65, (1950), pp. 15-22.

240. Ridgeway L.P. and D.A. Karnofsky. "The Effects of on the Chick Embryo and Production of Abnormalities in Development of Selenium." New York Academy of Sciences, Vol. 55 (1952), pp. 203-215.

241. Pletnikova, I. "Biological Effect and Safe Concentration of Selenium in Drinking Water." Hygiene and Sanitation, Vol. 35, No. 2 (1970), pp. 176-180.

242. Klug, H.L. and C. Kendrick. "Selenium and Lung Tumors." Proceedings of Society of South Dakota Academy of Sciences, Vol. 33 (1956), pp. 87-89.

243. Innes, J.R.M., et al. "Bioassay of Pesticide and Industrial Chemicals for Tumorigencity in Mice: A Preliminary Note. Journal of National Cancer Institute, Vol. 42 (1969), pp. 1101-1116.

244. Holmberg, R. and V.H. Ferm. "Interrelationships of Cadmium and Arsenic in Mammalian Teratogenesis." Archives of Industrial Health, Vol. 18, No. 6 (1969), pp. 873-877.

245. Dudley, H.C. "Toxicology of Selenium: V. Toxic and Vesicant Properties of Selenium Oxychloride." U.S. Public Health Rep., Vol. 53 (1938), pp. 91-98.

246. Karnofsky, D.A., L.P. Ridgway and P.A. Patterson. "Production of Achondroplasia in the Chick Embryo with Thallium." Proceedings of Society for Experimental Biology and Medicine, Vol. 73 (1950), pp. 255-259.

247. Bertran, E.C. "Morphological Modifications of the Hen Embryo Caused by Some Trace Elements." An. Inst. Invest. Vet., Vol. 13 (1963), pp. 11-30.

248. Landauer, W. "Experiments Concerning the Teratogenic Nature of Thallium: Polyhydroxy Compounds, Histidine and Imidazole as Supplements." Journal of Experimental Zoology, Vol. 163, No. 1 (1960), pp. 101-105.

249. Barclay, R.K., W.C. Peacock and D.A. Kornofsky. "Distribution and Excretion of Radioactive Thallium in the Chick Embryo, Rat, and Man." Journal of Pharmacological Experimental Therapeutics, Vol. 107 (1953), pp. 178-187.

250. Truhaut, R. "Antimitotic Properties of Monovalent Thallium Salts and their Toxicological Importance." Alzneimittel. Forsch., Vol. 16 (1966), pp. 837-861.

251. Herman, M.M. and K.G. Bensch. "Light and Electron Microscopic Studies of Acute and Chronic Thallium Intoxication in Rats." Toxicology and Applied Pharmacology, Vol. 10, No. 2 (1967), pp. 199-222.

252. Gibson, J.E. and B.A. Becker. "Placental Transfer, Embryo Toxicity, and Teratogenicity of Thallium Sulfate in Normal and Potassium-deficient Rats. Toxicology and Applied Pharmacology, Vol. 16, No. 1 (1970), pp. 120-132.

253. Melnick, R.L., L.G. Monit and S.M. Motzkin. "Uncoupling of Mitochondrial Oxidative Phosphorylation by Thallium." Biochemical and Biophysical Research Communications, Vol. 69, No. 1 (1976), pp. 68-73.

254. Kusano, T. "Studies on the Improved Effectiveness of Anticoagulative Rodenticides on Rodents." J. Fac. Agric. Tottori. Univ., Vol. 5 (1969), pp. 1552.

255. Champy, C., S. Hatem and J. Tharanne. "Pathology of the Genital Tract of the Female Mouse after Controlled Thallium Intoxication." C. R. Soc. Biol., Vol. 152 (1950), pp. 906-907.

256. Zook, B.C., J. Holzworth and G.W. Thornton. "Thallium Poisoning in Cats." American Veterinary Medical Association Journal, Vol. 153, No. 3 (1968), pp. 285-299.

257. Zook, B.C. and C.E. Gilmore. "Thallium Poisoning in Dogs." American Veterinary Medical Association Journal, Vol. 151, No. 2 (1967), pp. 206-217.

258. Mather, G.W. and D.G. Low. "Thallium Intoxication in Dogs." American Veterinary Medical Association Journal, Vol. 137, No. 9 (1960), pp. 546-549.

259. Dial, N.A. "Methylmercury: Teratogenic and Lethal Effects in Frog Embryos." Teratology, Vol. 13, No. 3 (1976), pp. 327-333.

260. Bouquegneau, J. "Study of Mercury Poisoning in Anguilla anguilla, a Telost." Bull. Soc. Roy. Sci. Liege., Vol. 42, No. 9-10 (1973), pp. 440-446.

261. Hill, E.F. and C.S. Shaffner. "Sexual Maturation and Productivity of Japanese Quail Fed Graded Concentrations of Mercuric Chloride." Poultry Science, Vol. 55, No. 4 (1976), pp. 1449-1459.

262. Rizzo, A.M. and A. Furst. "Mercury Teratogenesis in the Rat." Proc. West. Pharmacol. Soc., Vol. 15 (1972), pp. 52-54.

263. Bengtsson, B. "Effect of Zinc on the Movement Pattern of the Minnow, Phoxinus phoxinus L." Water Research, Vol. 8, No. 10 (1974), pp. 829-833.

264. Sarot, D.A. and A. Perlmutter. "The Toxicity of Zinc to the Immune Response of the Zebrafish, (Brachydanio rerio), Injected with Viral and Bacterial Antigens." American Fish Society Transaction, Vol. 3 (1976), pp. 456-459.

265. Negilski, D.S. "Acute Toxicity of Zinc, Cadmium, and Chromium to the Marine Fishes, Yellow-eye Mullet (Aldrichetta forsteri C. & V.) and Small-mouthed Hard-head (Atherinasoma microstoma Whitley)." Australian Journal of Marine and Fresh Water Research, Vol. 27, No. 1 (1976), pp. 137-149.

266. Donaldson, J., et al. "Seizures in Rats Associated with Divalent Cation Inhibition of $Na^+ - K^+ - ATP_+$ ase." Candian Journal of Biochemistry, Vol. 49, No. 11 (1971), pp. 1217-1224.

267. Rondanelli, E.G. "Benzene-induced Anomalies in Mitotic Cycle of Living Erythroblasts." Sangre, Vol. 9, No. 3 (1964), pp. 342-351.

268. Tough, I.M. "Chromosome Aberrations and Exposure to Ambient Benzene." Lancet, Vol. 7387 (1965), p. 684.

269. Horiuchi, K., S. Horiguchi and K. Aratake. "Maximum Allowable Concentration of Benzene in the Air of Workshops." Osaka City Medical Journal, Vol. 9, No. 1 (1963), pp. 79-90.

270. Kalemba-Zub, M. "An Investigation on the Influence of Benzene Vapours upon the State of Morphotic Elements of Peripheral Blood in Man." Acta Biol. Cracoviensia, Vol. 13, No. 1 (1970), pp. 93-103.

271. Rejsek, K. and M. Rejskova. "Long-term Observation of Chronic Benzene Poisoning." Acta Medica Scandinavica, Vol. 152, No. 1 (1955), pp. 71-78.

272. Drozd, J. and E.J. Bockowski. "Acute Benzene Poisoning." Journal of Occupational Medicine, Vol. 9, No. 1, pp. 9-11.

273. Forni, A. and L. Moreo. "Cytogenetic Studies in a Case of Benzene Leukemia." European Journal of Cancer, Vol. 3, No. 4/5 (1967), pp. 251-255.

274. Kahn, H. and V. Muzyka. "Chronic Effect of Benzene on Porphyrin Metabolism." Work Environ. Health, Vol. 10, No. 3 (1973), pp. 140-143.

275. Elgjo, K. "Epidermal Cell Population Kinetics after Repeated Applications of Some Hyperplasia-producing Substances." European Journal of Cancer, Vol. 4, No. 2 (1968), pp. 183-192.

276. Watanabe, G. and S. Yoshida. "Teratogenic Effect of Benzene in Pregnant Mice." Acta Med. Biol., (Niigata) Vol. 17, No. 4 (1970), pp. 285-291.

277. Nomiyama, K. "Benzene Poisoning." Bulletin of Tokyo Medical-Dental University, Vol. 11 (1964), pp. 297-312.

278. Mackell, J.V. and E. Bauer. "Acute Hemolytic Anemia due to Ingestion of Naphthalene." Moth Balls Pediatrics, Vol. 7 (1951), pp. 722-724.

279. Zuelzer, W. and L. Apt. "Acute Hemolytic Anemia due to Napthalene Poisoning." Journal of American Medical Association, Vol. 141 (1969), pp. 185-190.

280. Ableson, S.M. and A. Henderson. "Moth Ball Poisoning." U.S. Armed Forces Medical Journal, Vol. 2 (1951), pp. 491-493.

281. Anziulewicz, J.A., H.J. Dick and E.E. Chiarulli. "Transplacental Naphthalene Poisoning." American Journal of Obstetrics and Gynecology, Vol. 78 (1959), pp. 519-521.

282. Schemltz, I. "The Role of Naphthalenes as Carcinogens." Presented at the 16th Annual Meeting, Society of Toxicology, Toronto, Canada: March 27-30, 1977.

283. Smyth, H.F. and J. Seaton. "Acute Response of Guinea Pigs and Rats to Inhalation of the Vapors of Isophorone." J. Ind. Hyg. Toxicol., Vol. 22 (1960), pp. 477-483.

284. Carpenter C.P. and H.F. Smyth. "Chemical Burns of the Rabbit Cornea." American Journal of Opthalmology, Vol. 29 (1946), pp. 1363-1372.

285. Truhaut, R., et al. "Toxicity of an Industrial Solvent, Isophorone; Irritating Effect on the Skin and Mucous Membrane." European Journal of Toxicology, Vol. 5, No. 1 (1972), pp. 31-37.

286. Grabski, D.A. "Toluene Sniffing Producing Cerebellar Degeneration." American Journal of Psychiatry, Vol. 118 (1961), pp. 461-462.

287. Knox, J.W. and J.R. Nelson. "Permanent Encephalopathy from Toluene Inhalation." New England Journal of Medicine, Vo. 275, No. 26 (1966), pp. 1494-1496.

288. Brinton, H.P., E.S. Frasier and A.L. Koven. "Morbidity and Mortality Experience among Chromate Workers." Public Health Reports, Vol. 67 (1952), p. 835.

289. Machle, W. and F. Gregorius. "Cancer of the Respiratory System in the United States Chromate-producing Industry." Public Health Reports, Vol. 63 (1948), pp. 1114-1127.

290. Myers, J.B. "Acute Pulmonary Complications Following Inhalation of Chromic Acid Mist. Archives of Industrial Hygiene and Occupational Medicine, Vol. 2 (1950), pp. 742-747.

291. "Arsenic and Inorganic Arsenic Compounds." IARC Monograph on the Evaluation of the Carcinogenic Risk of Chemicals to Man: Some Inorganic and Organometallic Compounds. Publication from the meeting of two IARC Working Groups on the Evaluation of the Carcinogenic Risk of Chemicals to Man, Lyon, October 7 and November 29 - December 4, 1972.

292. Minkowitz, S. "Multiple Carcinomata Following Ingestion of Medicinal Arsenic. Annals of Internal Medicine, Vol. 61 (1964), pp. 296-299.

293. Somers, E. and R.G. McManus. "Multiple Arsenical Cancers of Skin and Internal Organs. Cancer, Vol. 6 (1953), pp. 347-359.

294. Sanderson, K.V. Arsenic and Skin Cancer. St. John's Hospital Dematological Society Transactions, Vol. 49 (1963), pp. 115-122.

295. Tseng, W.P., et al. "Prevalence of Skin Cancer in an Endemic Area of Chronic Arsenicism in Taiwan." Journal of National Cancer Institute, Vol. 40 (1968), pp. 453-463.

296. Goldsmith, J.R., et al. Evaluation of Health Implications of Elevated Arsenic in Water. Water Research, Vol. 6, No. 10 (1972), pp. 1133-1136.

297. Snegireff, L.S. and O.M. Lombard. "Arsenic and Cancer - Observations in the Metallurgical Industry. Arch. Indust. Hyg., Vol. 4 (1951), pp. 199-205.

298. Pinto, S.S. and B.M. Bennett. "Effects of Arsenic Trioxide Exposure on Mortality." Arch. Environ. Health, Vol. 7, No. 5 (1963), pp. 583-591.

299. Van Ordstrand, H.S., et al. "Beryllium Poisoning." Journal of American Medical Association, Vol. 129 (1945), pp. 1084-1090.

300. National Institute for Occupational Safety and Health. 1972. Criteria for a Recommended Occupational Exposure to Beryllium. U.S. Govt. Print. Office, Washington, DC.

301. Hardy, H.L. and J.D. Stoeckle. "Beryllium Disease." J. Chron. Dis., Vol. 9, No. 2 (1959), pp. 152-160.

302. Stoeckle, J.D., H.L. Hardy and A.L. Weber. "Chronic Beryllium Disease." American Journal of Medicine, Vol. 46, No. 4 (1969), pp. 545-561.

303. Hasan, F.M. and H. Kazemi. "Chronic Beryllium Disease: A Continuing Epidemiologic Hazard." Chest, Vol. 65, No. 3 (1974), pp. 289-293.

304. Witschi, H.P. and W.N. Aldridge. "Uptake, Distribution and Binding of Beryllium to Organelles of the Rat Liver Cell." Biochemistry Journal, Vol. 106 (1968), pp. 811-820.

305. Freudenthal, R. and P.W. Jones. "Polynuclear Aromatic Hydrocarbons. Chemistry, Metabolism and Carcinogenesis." Carcinogenesis - A Comprehensive Survey, Vol. 1. New York: Raven Press. 1976.

306. Fulkerson, W. and H.E. Goeller, Eds. Cadmium. The Dissipated Element, Oak Ridge: Oak Ridge National Laboratory, 1973.

307. Friberg, L., M. Piscator and G. Nordberg. Cadmium in the Environment. Cleveland, Ohio: CRC Press. 1971.

308. Holmes, C.W., E.A. Slade and C.S. McLerra. "Migration and Redistribution of Zinc and Cadmium in Marine Estuarine System." Environmental Science and Technology, Vol. 8, No. 3 (1976), p. 255.

309. Roth, I. and H. Hornung. "Heavy Metal Concentrations in Water Sediments and Fish from Mediterranean Coastal Area, Israel." Environmental Science and Technology, Vol. 11, No. 3 (1977), pp. 265-269.

310. Nielsen, S. and A. Nathan. "Heavy Metal Levels in New Zealand Molluscs." New Zealand Journal of Marine and Freshwater Research, Vol. 9, No. 4 (1975), pp. 467-481.

311. U.S. Atomic Energy Commission. 1970. Inhalation Carcinogenesis. AEC, Division of Technical Information: Washington, DC.

312. Saito, H. "Chronic Cadmium Poisoning Induced by Environmental Cadmium Pollution: Multiple Proximal Tubular Dysfunctions Found in a Number of Persons Living in a Cadmium-polluted Area." Nippon Naika Gakkai Zasshi, Vol. 64, No. 12 (1975), pp. 1371-1383.

313. Potts, C.L. "Cadmium Proteinuria - The Health of Battery Workers Exposed to Cadmium Dust." Annals Occupational Hygiene. Vol. 8 (1965), pp. 55-61.

314. Lemen, R.A. "Cancer Mortality among Cadmium Production Workers." Annals New York Academy of Science, Vol. 271 (1976), pp. 273-279.

315. Shiraishi, Y., H. Kurahashi and T.H Yosida. "Chromosomal Aberrations in Cultured Human Leucocytes Induced by Cadmium Sulfide." Proceedings of Japanese Academy, Vo. 48, No. 2 (1972), pp. 133-137.

316. Shiraishi, Y. and T.H. Yosida. "Chrosomal Abnormalities in Cultured Leucocyte Cells from Itai-Itai Disease Patients." Proceedings of Japanese Academy, Vol. 48 (1972) pp. 248-251.

317. Peterson, W.C., Jr. "Nickel Sensitivity. Minn. Med., Vol. 51 (1963), pp. 289-290.

318. Morgan, J. "Some Observations on the Incidence of Respiratory Cancers in Nickel Workers." British Journal of Industrial Medicine, Vol. 15 (1958), pp. 224-231.

319. Callan, W.M. and F.W. Sunderman, Jr. Species Variations in Binding of ^{63}Ni (II) by Serum Albumin. Research Communications in Chemical Pathology and Pharmacology, Vol. 5, No. 2 (1973), pp. 459472.

320. Muir, G.D. and W.G. Moss. "Poisonous and Corrosive Gases, Reagents and Salts." Laboratory Handbook of Toxic Agents. London: Royal. Institute of Chemistry, 1960. p. 106.

321. Forni, A., G. Combiaghi and G.C. Secchi. "Initial Occupational Exposure to Lead." Archives of Environmental Health, Vol. 31, No. 2 (1976), pp. 7378.

322. David, O.J., et al. "The Role of Lead in Hyperactivity." Psychopharmacology Bulletin, Vol. 12, No. 2 (1976), pp. 11-13.

323. Vroom, F.Q. and M. Greer. "Mercury Vapour Intoxication." Brain, Vol. 95 (1972), pp. 305-318.

324. Davis, L.E. "Central Nervous System Intoxication from Mercurous Chloride Laxatives." Archives of Neurology, Vol. 30 (1976), 428-431.

325. Rustam, H. and T. Hamdi. "Methyl Mercury Poisoning in Iraq. A Neurological Study." Brain, Vol. 97 (1976), pp. 199-510.

326. Glover, J.R. "Selenium and Its Industrial Toxicology." Industrial Medicine, Vo. 39, No. 1 (1970), pp. 50-54.

327. Oregon State University. "Selenium in the Environment." Heavy Metals in the Environment. Oregon State University Press, 1972, pp. 182-203.

328. Turbak, S., G. McFeters and G. Olson. "Effects of Coal Mining and Energy Conversion on Aquatic Microflora: Toxic Effects on the Aquatic Biota from Coal and Oil Shale Development Progress Report - year 1, by R.V. Thurston, R.K. Skogerboe and R.C. Russo (Eds.). Internal Project Report No. 9 of the Natural Resource Ecology Laboratory, Colorado State University, Fort Collins, CO. 1976.

329. Council for Agricultural Science and Technology. Application of Sewage Sludge to Cropland. Appraisal of Potential Hazards of Heavy Metals to Plants and Animals. Report #64, 1972. pp. 1-63.

330. Brenniman, G., R. Hartung and W.J. Weber, Jr. "A Continuous Flow Bioassay Method to Evaluate the Effects of Outboard Motor Exhausts and Selected Aromatic Toxicants on Fish." Water Research, Vol. 10, No. 2 (1976), pp. 165-169.

331. Lalithamma, B.P., et al. "Role of Magnesium and Iron in the Reversal of Nickel Toxicity in Ogawa Serotypes of Vibrio cholerae and Vibrio eltor." Current Science. Vol. 45, No. 16 (1976), pp. 578-580.

332. Upitis V., A. Nollendorf and D. Pakalne. "Secondary Elements in Substrates, Nutrient Media and Plants." Mikroelem. Komplekse Miner. Ptan. Rast, (1975), pp. 8499.

333. Proctor, J. and I.D. McGowan. "Influence of Magnesium on Nickel Toxicity." Nature, Vol. 260, No. 5547 (1976), p. 136.

334. Jensen, L.S. "Modification of Selenium Toxicity in Chicks by Dietary Silver and Copper." Journal of Nutrition, Vo. 105 (1975), pp. 769-775.

335. Cerklewski, F.L. and R.M. Forbes. "Influence of Dietary Selenium on Lead Toxicity in the Rat." Journal of Nutrition, Vol. 106 No. 6 (1976), pp. 778-783.

336. Ohi, G., et al. "Efficacy of Selenium in Tuna and Selenite in Modifying Methylmercury Toxicity." Environmental Research, Vol. 12 (1976), pp. 49-58.

337. Bowey, A.D. "Aromatic Hydrocarbons and the Growth of Marine Algae." Mar. Pollut. Bull., Vol. 5 (1975), pp. 185-186.

338. Dunstan, W.M., L. P. Atkinson and J. Natoli. "Stimulation and Inhibition of Phytoplankton Growth by Low Molecular Weight Hydrocarbons." Marine Biology, Vol. 31 (1975), pp. 305-310.

339. Blumer, M. "Benzpyrenes in Soil." Science, Vol. 135 (1961), pp. 136-137.

340. Dunstan, W.M., L.P. Atkinson and J. Natoli. "Stimulation and Inhibition of Phytoplankton Growth by Low Molecular Weight Hydrocarbons." Marine Biology, Vol. 31 (1975), pp. 305-310.

341. Kauss, P.B. and T.C. Hutchinson. "The Effects of Water Soluble Petroleum Components on the Growth of Chlorella vulgaris beijerinck." Environmental Pollution, Vol. 9, No. 1 (1975), pp. 157-176.

342. Soto, C., J.A. Hellebust and T.C. Hutchinson. "Effect of the Naphthalene and Aqueous Crude Oil Extracts on the Green Flagelatte Chlamydomonas angulosa. II. Photosynthesis and the Uptake and Release of Naphthalene." Canadian Journal of Botany, Vol. 53, No. 2 (1975), pp. 118-126.

343. Stein, A. and E.C. Keller, Jr. "Gene and Growth Dynamics of Chlorella under Continuous Culture During Phenol Stress." Proceedings of West Virginia Academy of Science, Vol, 45, No. 2 (1973), pp. 103-111.

344. Tews L. "The Response of Selected Fungi to Acenaphthene." Mycologia, Vol. 15 (1968), pp. 692-697.

345. Krauss, E. and G.M. Mateyko. "Chemical Induction of Neoplasms in the Kidney of Rana pipiens." Cancer Research, Vol. 24 (1964), pp. 1969-77.

346. Bauer, L. and W. Graef. "On the Interaction of Polycyclic Aromatic Hydrocarbons and Light with Regard to Its Syncarcinogenic Effects." Zeatralbl. Bakteriol. Hyg. I., Vol. 161, No. 4 (1976), pp. 304-316.

347. Schmidt, E.G., et al. "Microbiological Study of Cryptococcus Neofocumans." Archives of Biochemistry, Vol. 26 (1950), pp. 15-26.

348. Jackson, R.W. and J.A. DeMoss. "Effects of Toluene on Escherichia coli. Journal of Bacteriology, Vol. 90, No. 5 (1965) pp. 1420-1425.

349. Perkins, H.C. Air Pollution, New York, McGraw-Hill, 1975, pp. 260-317.

350. Hendrey, G.R., et al. Acid Precipitation - Some Hydrobiological Changes. Ambio, Vol. 5, No. 56 (1976), pp. 224-227.

351. Currier, H.B. "Herbicidal Properties of Benzene and Certain Methyl Derivatives." Hilgardia, Vol. 20, No. 19 (1951), pp. 383-406.

352. Neff, J.M., et al. "Effects of Petroleum on Survival Respiration and Growth of Marine Animals." In: Sources, Effects at Sinks of Hydrocarbons in the Aquatic Environment; Proceedings of the Symposium, American University, Washington, D.C.: pp. 516-539.

353. Price, K.S., et al. "Brine Shrimp Bioassay and BOD of Petrochemicals." Journal of Water Pollution Control Federation, Vol. 46 (1976), pp. 63-76.

354. Boni, P. "Acute Toxicity and Elimination of Phenol Injected into Fish (Carassius auratus L.)." Experientia, Vol. 21, No. 6 (1965), pp. 222-223.

355. Kojima, T. and H. Kobayashi. "Toxicological Study on Toluene Poisoning by Inhalation. Correlation of Toluene Concentrations for Exposure with Mortality and Toluene Tissue Levels." Nippon Hoigaku Zasshi, Vol. 27, No. 4 (1973), pp. 282-286.

356. Rondanelli, E.G., et al. "Effect of Benzene on Erythroblastic Mitosis. Investigations Using Phase Contrast Microcinematography." Acta Haematol., Vol. 26, No. 5 (1961), pp. 281-302.

357. Anderson, J.W., et al. The Effects of Oil on Estuarine Animals: Toxicity, Uptake, and Depuration, Respiration. Pollution and Physiology of Marine Organisms. New York: Academic Press, Inc., 1974, pp. 285-310.

358. Grob, K. and G. Grob. "Organic Substances in Potable Water and in Its Precursor, Part II. Applications in the Area of Zurich." Journal of Chromatography, Vol. 90 (1974), pp. 303-313.

359. Korn, S., J.W. Struhsaker and P.J. Benville, Jr. "Effects of Benzene on Growth, Fat Content and Caloric Content of Striped Bass, Morone Saxatilis." Fish. Bull., Vol. 74, No. 3 (1976), pp. 696-698.

360. Holland, G.A., et al. "Toxic Effects of Organic and Inorganic Pollutants on Young Salmon and Trout." Wash. Dept. Fisheries. Res. Bull., No. 5 (1960), pp. 162-165.

361. Nunogawa, J.N., N.C. Burbank and R.H.F. Young. "The Relative Toxicities of Selected Chemicals to Several Species of Tropical Fish." In: Proceedings of the 5th International Conference on Advanced Water Pollution Research. 2:HA-14 (1974), pp. 1-14.

362. Pickering, Q.H. and C. Henderson. "Acute Toxicity of Some Important Petrochemicals to Fish." Journal of Water Pollution Control Federation, Vol. 38, No. 9 (1966), pp. 1419-1429.

363. Beamish, R.J. "Acidification of Lakes in Canada by Acid Precipitation and the Resulting Effects on Fishes. Water, Air, and Soil Pollution, Vol. 6 (1976), pp. 501-514.

364. Knobloch, K., Scendzikowski, and Siosarczyk-Zalobna "Acute and Subacute Toxicity of Acenaphthene and Acenaphthylene." Med. Pracy., Vol. 20, No 3 (1969), pp. 210-222.

365. Reshetyuk, A.L., E.I. Talakina and P.A. En'yakova. "Toxicological evaluation of Acenaphthene and Acenaphthylene." Gigiena Truda I Professional' Nye Zabolevania, Vol. 14, No. 6 (1970), pp. 46-47.

366. Deichmann, W.B., W.B. McDonald and E. Bernal. "The Hemopoietic Tissue Toxicity of Benzene Vapors." Toxicology and Applied Pharmacology, Vol. 5, No. 2 (1963), pp. 201-226.

367. Jenner, P.M., et al. "Food Flavorings and Compounds of Related Structure. I. Acute Oral Toxicity." Food and Cosmetics Toxicology, Vol. 2, No. 3 (1964), pp. 327-343.

368. Taylor, J.M., P.M Fenner and W.I. Jones. "A Comparison of the Toxicity of Some Allyl Propenyl and Propyl Compounds in the Rat." Toxicology and Applied Pharmacology, Vol. 6, No. 4 (1966), pp. 378-387.

369. Smyth, H.F., Jr., et al. "An Exploration of Joint Toxic Action. 27. Industrial Chemicals Intubated in Rats in All Possible Pairs." Toxicology and Applied Pharmacology, Vol. 15 (1969), pp. 340-347.

370. Wolf, M.S., et al. "Toxicological Studies of Certain Akyllated Benzenes and Benzene." A.M.A. Archives of Industrial Health, Vol. 14 (1956), pp. 387-398.

371. Smyth, H.F. "Range-finding Toxicity Data: List VI." American Industrial Hygiene Association Journal, Vol. 23, No. 2 (1962), pp. 95-107.

372. Union Carbide Corporation. Isophorone. New York. Industrial Medicine & Toxicology Dept., Union Carbide, New York, 1971.

373. Union Carbide Corporation. Technical Data Sheet. Toxicology Studies. Union Carbide, New York, 1968.

374. Inoue, K. "Studies on Occupational Toluene Poisoning. (2) An Animal Experiment Using Inhalation of Toluene Vapor with Mice." Osaka Shiritsu Daigaku Igaku Zasshi, Vol. 24, No. 10-12 (1975), pp. 791-803.

375. Occupational Safety and Health Administration. "Emergency Temporary Standard for Occupational Exposure to Benzene; Notice of Hearing." Federal Register, Vol. 42, No. 85 (1977), pp. 22516-22524.

376. Smyth, H.F., et al. "An Exploration of Joint Toxic Action. 27. Industrial Chemicals Intubated in Rats in All Possible Pairs." Toxicology and Applied Pharmacology, Vol. 14, (1969), pp. 340-347.

377. Krombach, H. and J. Barthel. "Investigation of a Small Watercourse Accidentally Polluted by Phenol Compounds." International Journal of Air and Water Pollution, Vol. 7 (1963), pp. 39-46.

378. Herbes, S.E. and J.J. Beauchamp. "Toxic Interaction of Mixtures of Two Coal Conversion Effluent Components (resorcinol and 6-methylquinoline) to Daphnia magna." Bull. Environ. Contaminant Toxicology, 1977, p. 25.

379. Bolin, B. and E. Arrhenius. "Nitrogen - An Essential Life Factor and a Growing Environmental Hazard." Ambio, Vol. 6, No. 2-3 (1977), pp. 96-105.

380. Guerin, M.R., et al. "Chemical Characterization of Coal Conversion Pilot Plant Materials." In: Proceedings of Environmental Protection Conference, Vol. 3, No. 2 (1975), pp. 661-665.

381. Tipple A. Polynuclear Aromatic Carcinogens. Chapter 5 by C.E. Searle (Ed.), Chemical Carcinogens, Washington, D.C.: ACS Monograph 171, 1976.

382. Rinde, E. and W. Troll. "Metabolic Reduction of Benzidine-azo Dyes to Benzidine in the Rhesus Monkey." Journal of National Cancer Institute, Vol. 55, No. 1, (1975), pp. 181-182.

383. Scott, T.S. "The Incidence of Bladder Tumors in a Dyestuffs Factory." British Journal of Industrial Medicine, Vol. 9 (1952), pp. 127-132.

384. Zavon, M.R., U. Hoegg and E. Bingham. "Benzidine Exposure as a Cause of Bladder Tumors." Archives of Environmental Health, Vol. 27, No. 1 (1973), pp. 1-7.

385. Tsuchiya, K., T. Okubo and S. Ishizu. "An Epidemiological Study of Occupational Bladder Tumors in the Dye Industry of Japan." British Journal of Industrial Medicine, Vol. 32 (1975), pp. 203-209.

386. Rinde, E. and W. Troll. Metabolic Reduction of Benzidine-azo dyes to Benzidine in the Rhesus Monkey. Journal of National Cancer Institute, Vol. 55, No. 1 (1975), pp. 181-182.

387. Kubota, H., W.H. Griest and M.R. Guerin. "Determination of Carcinogens in Tobacco Smoke and Coal-derived Samples - Trace Polynuclear Aromatic Hydrocarbons." Trace Substances in Environmental Health, Vol. 9 (1975), pp. 281-289.

388. Rubin, I.B., et al. "Fractionation of Synthetic Crude Oils from Coal for Biological Testing." Environmental Research, Vol. 12 (1976), pp. 358-365.

389. Epler, J.L. Analytical and Biological Analysis of Test Materials from the Synthetic Fuel Technologies. I. Mutagenicity of Crude Oils Determined by the Salmonella typhimurium/microsomal Activation System. Submitted to J. Toxicol. Environ. Health, 1977.

390. Broderson, A.B., R.G Edwards and W.P. Hanser. Social, Economics and Environmental Impacts of Coal Gasification and Liquefaction Plants. In: Papers presented before the 2nd Symposium on Coal Utilization, Louisville, KY. National Coal Association, 1975.

391. American National Standard for Metric Practise ANSI/ASTM E380-76, IEEE Standard 268-1976 for Annual Book of ASTM standards. American Society for Testing and Materials, Philadelphia, PA, 1976.

APPENDICES

A. SI (METRIC) CONVERSION FACTORS

B. SIEVE SERIES

C. SI PREFIXES

APPENDIX A. METRIC CONVERSION FACTORS (391)

To Convert From	To	Multiply By
	Acceleration	
ft/s^2	metre per second^2 (m/s^2)	3.048-000 E-01
	Area	
Acre (U.S. survey)[12]	metre^2 (m^2)	4.046 873 E+03
ft^2	metre^2 (m^2)	9.290 304 E-02
in^2	metre^2 (m^2)	6.451 600 E-04
yd^2	metre^2 (m^2)	8.361 274 E-01
	Energy (Includes Work)	
British thermal unit (mean)	joule (J)	1.055 87 E+03
Calorie (kilogram, mean)	joule (J)	4.190 02 E+03
kilocalorie (mean)	joule (J)	4.190 02 E+03
	Length	
foot	metre (m)	3.048 000 E-01
inch	metre (m)	2.540 000 E-02
yard	metre (m)	9.144 000 E-01
	Mass	
grain	kilogram (kg)	6.479 891 E-05
grain	kilogram (kg)	1.000 000 E-03
pound (lb avoirdupois)	kilogram (kg)	4.535 924 E-01
ton (metric)	kilogram (kg)	1.000 000 E+03
ton (short, 2000 lb)	kilogram (kg)	9.071 847 E+02
	Mass Per Unit Area	
lb/ft^2	kilogram per metre^2 (kg/m^2)	4.882 428 E+00

APPENDIX A. METRIC CONVERSION FACTORS (Continued)

To Convert From	To	Multiply By
Mass Per Unit Length		
lb/ft	kilogram per metre (kg/m)	1.488 164 E+00
lb/in	kilogram per metre (kg/m)	1.785 797 E+01
Mass Per Unit Time (Includes Flow)		
lb/h	kilogram per second (kg/s)	1.259 979 E-04
lb/min	kilogram per second (kg/s)	7.559 873 E-03
ton (short)/h	kilogram per second (kg/s)	2.519 958 E-01
Mass Per Unit Volume (Includes Density & Mass Capacity)		
lb/ft^3	kilogram per $metre^3$ (kg/m^3)	1.601 846 E+01
lb/gal (U.S. liquid)	kilogram per $metre^3$ (kg/m^3)	1.198 264 E+02
lb/yd^3	kilogram per $metre^3$ (kg/m^3)	5.932 764 E-01
Power		
Btu (thermochemical)/h	watt (W)	2.930 711 E-01
Btu (thermochemical)/h	watt (W)	2.928 751 E-01
cal (thermochemical)/min	watt (W)	6.973 333 E-02
cal (thermochemical)/s	watt (W)	4.184 000 E+00
Pressure or Stress (Force Per Unit Area)		
atmosphere (standard)	pascal (Pa)	1.013 250 E+05
foot of water (39.2°F)	pascal (Pa)	2.988 98 E+03
lbf/ft^2	pascal (Pa)	4.788 026 E+01
lbf/in^2 (psi)	pascal (Pa)	6.894 757 E+03
Temperature		
degree Celsius	Kelvin (K)	$t_K = t_{°C} + 273.15$
degree Fahrenheit	degree Celsius	$t_{°C} = (t_{°F} - 32)/1.8$
degree Fahrenheit	Kelvin (K)	$t_K = (t_{°F} + 459.67)/1.8$
degree Rankine	Kelvin (K)	$t_K = t_{°R}/1.8$
Kelvin	degree Celsius	$t_{°C} = t_K - 273.15$

APPENDIX A. METRIC CONVERSION FACTORS (Continued)

To Convert From	To	Multiply By
Velocity (Includes Speed)		
ft/h	metre per second (m/s)	8.466 667 E-05
ft/min	metre per second (m/s)	5.080 000 E-03
ft/s	metre per second (m/s)	3.048 000 E-01
in/s	metre per second (m/s)	2.540 000 E-02
Viscosity		
centipoise	pascal second ($Pa \cdot s$)	1.000 000 E-03
centistokes	metre^2 per second (m^2/s)	1.000 000 E-06
poise	pascal second ($Pa \cdot s$)	1.000 000 E-01
stokes	metre^2 per second (m^2/s)	1.000 000 E-04
Volume (Includes Capacity)		
acre-foot (U.S. survey)	metre^3 (m^3)	1.233 489 E+03
barrel (oil, 42 gal)	metre^3 (m^3)	1.589 873 E-01
ft^3	metre^3 (m^3)	2.831 685 E-02
gallon (U.S. liquid)	metre^3 (m^3)	3.785 412 E-03
litre*	metre^3 (m^3)	1.000 000 E-03
Volume Per Unit Time (Includes Flow)		
ft^3/min	metre^3 per second (m^3/s)	4.719 474 E-04
ft^3/s	metre^3 per second (m^3/s)	2.831 685 E-02
gal (U.S. liquid/day)	metre^3 per second (m^3/s)	4.381 264 E-08
gal (U.S. liquid/min)	metre^3 per second (m^3/s)	6.309 020 E-05

*In 1964 the General Conference on Weights and Measures adopted the name litre as a special name for the cubic decimetre. Prior to this decision the litre differed slightly (previous value, 1.000028 dm^3) and in expression of precision volume measurement this fact must be kept in mind.

APPENDIX B. SIEVE SERIES (60)

Sieve designation		Sieve opening		Nominal wire diam.		
Standard	Alternate	mm.	in. (approx. equiva-lents)	mm.	in. (approx. equiva-lents	Tyler equivalent designation
107.6 mm.	4.24 in.	107.6	4.24	6.40	0.2520	
101.6 mm.	4 in.**	101.6	4.00	6.30	.2480	
90.5 mm.	3-1/2in.	90.5	3.50	6.08	.2394	
76.1 mm.	3 in.	76.1	3.00	5.80	.2283	
64.0 mm.	2-1/2 in.	64.0	2.50	5.50	.2165	
53.8 mm.	2.12 in.	53.8	2.12	5.15	.2028	
50.8 mm.	2 in.**	50.8	2.00	5.05	.1988	
45.3 mm.	1-3/4 in.	45.3	1.75	4.85	.1909	
38.1 mm.	1-1/2 in.	38.1	1.50	4.59	.1807	
32.0 mm.	1-1/4 in.	32.0	1.25	4.23	.1665	
26.9 mm.	1.06 in.	26.9	1.06	3.90	.1535	1.050 in.
25.4 mm.	1 in.**	25.4	1.00	3.80	.1496	
22.6 mm.*	7/8 in.	22.6	0.875	3.50	.1378	0.883 in.
19.0 mm.	3/4 in.	19.0	.750	3.30	.1299	.742 in.
16.0 mm.*	5/8 in.	16.0	.625	3.00	.1181	.624 in.
13.5 mm.	0.530 in.	13.5	.530	2.75	.1083	.525 in.
12.7 mm.	1/2 in.**	12.7	.500	2.67	.1051	
11.2 mm.*	7/16 in.	11.2	.438	2.45	.0965	.441 in.
9.51 mm.	3/8 in.	9.51	.375	2.27	.0894	.371 in.
8.00 mm.*	5/16 in.	8.00	.312	2.07	.0815	2-1/2 mesh
6.73 mm.	0.265 in.	6.73	.265	1.87	.0736	3 mesh
6.35 mm.	1/4 in.**	6.35	.250	1.82	.0717	
5.66 mm.*	No. 3-1/2	5.66	.223	1.68	.0661	3-1/2 mesh
4.76 mm.	No. 4	4.76	.187	1.54	.0606	4 mesh
4.00 mm.*	No. 5	4.00	.157	1.37	.0539	5 mesh
3.36 mm.	No. 6	3.36	.132	1.23	.0484	6 mesh
2.83 mm.*	No. 7	2.83	.111	1.10	.0430	7 mesh
2.38 mm.	No. 8	2.38	.0937	1.00	.0394	8 mesh
2.00 mm.*	No. 10	2.00	.0787	0.900	.0354	9 mesh
1.68 mm.	No. 12	1.68	.0661	.810	.0319	10 mesh
1.41 mm.*	No. 14	1.41	.0555	.725	.0285	12 mesh
1.19 mm.	No. 16	1.19	.0469	.650	.0256	14 mesh
1.00 mm.*	No. 18	1.00	.0394	.580	.0228	16 mesh
841 micron	No. 20	0.841	.0331	.510	.0201	20 mesh
707 micron*	No. 25	.707	.0278	.450	.0177	24 mesh
595 micron	No. 30	.595	.0234	.390	.0154	28 mesh
500 micron*	No. 35	.500	.0197	.340	.0134	32 mesh
420 micron	No. 40	.420	.0165	.290	.0114	35 mesh
354 micron*	No. 45	.354	.0139	.247	.0097	42 mesh
297 micron	No. 50	.297	.0117	.215	.0085	48 mesh
250 micron*	No. 60	.250	.0098	.180	.0071	60 mesh
210 micron	No. 70	.210	.0083	.152	.0060	65 mesh
177 micron*	No. 80	.177	.0070	.131	.0052	80 mesh
149 micron	No. 100	.149	.0059	.110	.0043	100 mesh
125 micron*	No. 120	.125	.0049	.091	.0036	115 mesh
105 micron	No. 140	.105	.0041	.076	.0030	150 mesh
88 micron*	No. 170	.088	.0035	.064	.0025	170 mesh
74 micron	No. 200	.074	.0029	.053	.0021	200 mesh
63 micron*	No. 230	.063	.0025	.044	.0017	250 mesh
53 micron	No. 270	.053	.0021	.037	.0015	270 mesh
44 micron*	No. 325	.044	.0017	.030	.0012	325 mesh
37 micron	No. 400	.037	.0015	.025	.0010	400 mesh

* These sieves correspond to those proposed as an international (I.S.O.) standard. It is recommended that wherever possible these sieves be included in all sieve analysis data or reports intended for international publication.

**These sieves are not in the fourth-root-of-2 series, but they have been included because they are in common usage.

APPENDIX C. SI PREFIXES (391)

Multiplication factor	Prefix	Symbol
$1\ 000\ 000\ 000\ 000\ 000\ 000 = 10^{18}$	exa[a]	E
$1\ 000\ 000\ 000\ 000\ 000 = 10^{15}$	peta[a]	P
$1\ 000\ 000\ 000\ 000 = 10^{12}$	tera	T
$1\ 000\ 000\ 000 = 10^{9}$	giga	G
$1\ 000\ 000 = 10^{6}$	mega	M
$1\ 000 = 10^{3}$	kilo	k
$100 = 10^{2}$	hecto[b]	h
$10 = 10^{1}$	deka[b]	da
$0.1 = 10^{-1}$	deci[b]	d
$0.01 = 10^{-2}$	centi[b]	c
$0.001 = 10^{-3}$	milli	m
$0.000\ 001 = 10^{-6}$	micro	μ
$0.000\ 000\ 001 = 10^{-9}$	nano	n
$0.000\ 000\ 000\ 001 = 10^{-12}$	pico	p
$0.000\ 000\ 000\ 000\ 001 = 10^{-15}$	femto	f
$0.000\ 000\ 000\ 000\ 000\ 001 = 10^{-18}$	atto	a

[a]Adopted by the CGPM in 1975.
[b]To be avoided where possible.

TECHNICAL REPORT DATA
(Please read Instructions on the reverse before completing)

1. REPORT NO.	2.	3. RECIPIENT'S ACCESSION NO.
EPA-600/7-78-184b		

4. TITLE AND SUBTITLE	5. REPORT DATE
Environmental Assessment Data Base for Coal Liquefaction Technology: Volume II. Synthoil, H-Coal, and Exxon Donor Solvent Processes	September 1978
	6. PERFORMING ORGANIZATION CODE
7. AUTHOR(S)	8. PERFORMING ORGANIZATION REPORT NO.
C. Leon Parker and Dewey I. Dykstra, Editors	
9. PERFORMING ORGANIZATION NAME AND ADDRESS	10. PROGRAM ELEMENT NO.
Hittman Associates, Inc. 9190 Red Branch Road Columbia, Maryland 21045	EHE623A
	11. CONTRACT/GRANT NO.
	68-02-2162
12. SPONSORING AGENCY NAME AND ADDRESS	13. TYPE OF REPORT AND PERIOD COVERED
EPA, Office of Research and Development Industrial Environmental Research Laboratory Research Triangle Park, NC 27711	Final; 2/77-8/78
	14. SPONSORING AGENCY CODE
	EPA/600/13

15. SUPPLEMENTARY NOTES IERL-RTP project officer is William J. Rhodes, Mail Drop 61, 919/541-2851.

16. ABSTRACT The two-volume report, prepared as part of an overall environmental assessment (EA) program for the technology involved in the conversion of coal to clean liquid fuels, and the Standards of Practice Manual for the Solvent Refined Coal Liquefaction Process (EPA-600/7-78-091) represent the current data base for the EA of coal liquefaction technology. This volume is an environmental characterization of three selected coal liquefaction systems: Synthoil, H-Coal, and Exxon Donor Solvent. It documents and evaluates existing environmentally significant data. System characterization includes an integrated multimedia assessment of discharges to the environment from conceptualized 7,950 cu m (50,000 bbl) per day systems. Estimates are given for the raw waste streams, treatment and control processes, treated waste stream discharges, and the effects of these discharges on the environment. Conclusions include: (1) carbon-containing residues from process phase separations are major potential environmental problems; (2) except for solid carbon-containing residues from phase separations, treatment and controls exist for removing most major waste components--however, their efficiency in controlling coal liquefaction waste streams needs to be tested; and (3) less attention has been addressed to trace organic and inorganic compounds. Volume I summarizes pertinent information about 14 prominent liquefaction systems now being developed.

17. KEY WORDS AND DOCUMENT ANALYSIS

a. DESCRIPTORS	b. IDENTIFIERS/OPEN ENDED TERMS	c. COSATI Field/Group
Pollution	Pollution Control	13B
Coal Preparation	Stationary Sources	08I
Liquefaction	Coal Liquefaction	07D
Assessments	Environmental Assessment	14B
Waste Treatment		

18. DISTRIBUTION STATEMENT	19. SECURITY CLASS *(This Report)*	21. NO. OF PAGES
Unlimited	Unclassified	480
	20. SECURITY CLASS *(This page)*	22. PRICE
	Unclassified	

EPA Form 2220-1 (9-73)