EPA 440/1-75/059b
GROUP II,

Development Document for Interim Final Effluent Limitations Guidelines and New Source Performance Standards for the

MINERALS FOR THE CHEMICAL AND FERTILIZER INDUSTRIES

VOL. II

MINERAL MINING AND PROCESSING INDUSTRY

Point Source Category

UNITED STATES ENVIRONMENTAL PROTECTION AGENCY

OCTOBER 1975

DEVELOPMENT DOCUMENT
for
INTERIM FINAL
EFFLUENT LIMITATIONS GUIDELINES
and
STANDARDS OF PERFORMANCE

MINERAL MINING AND PROCESSING INDUSTRY

VOLUME II

Minerals for the Chemical and Fertilizer Industries

Russell E. Train
Administrator

Andrew W. Breidenbach, Ph.D.
Acting Assistant Administrator for
Water and Hazardous Materials

Eckardt C. Beck
Deputy Assistant Administrator for
Water Planning and Standards

Allen Cywin
Director, Effluent Guidelines Division

Michael W. Kosakowski
Project Officer

October 1975

Effluent Guidelines Division
Office of Water and Hazardous Materials
U.S. Environmental Protection Agency
Washington, D.C. 20460

ABSTRACT

This document presents the findings of an extensive study of selected minerals for the chemical and fertilizer industries segment of the mineral mining industry for the purpose of developing effluent limitations guidelines for existing point sources and standards of performance and pretreatment standards for new sources, to implement sections 301, 304, 306 and 307 of the Federal Water Pollution Control Act, as amended (33 U.S.C. 1551, 1314, and 1316, 86 Stat. 816 et. seq.) (the "Act").

Effluent limitations guidelines contained herein set forth the degree of effluent reduction attainable through the application of the best practicable control technology currently available (BPCTCA) and the degree of effluent reduction attainable through the application of the best available technology economically achievable (BATEA) which must be achieved by existing point sources by July 1, 1977 and July 1, 1983, respectively. The standards of performance (NSPS) and pretreatment standards for new sources contained herein set forth the degree of effluent reduction which is achievable through the application of the best available demonstrated control technology, processes, operating methods, or other alternatives.

Based on the application of best practicable technology currently available, 7 of the 12 production subcategories (comprising 12 minerals) under study can be operated with no discharge of process generated waste water pollutants to navigable waters under normal operating conditions. With the best available technology economically achievable, 7 of the 12 production subcategories can be operated with no discharge of process generated waste water pollutants to navigable waters under normal operating conditions. No discharge of process generated waste water pollutants to navigable waters is achievable as a new source performance standard for all production subcategories except fluorspar (flotation), phosphate rock (flotation), rock salt, sulfur (salt dome), and lithium minerals.

Supporting data and rationale for development of the proposed effluent limtations guidelines and standards of performance are contained in this report.

CONTENTS

Section		Page
	Abstract	i
I	Conclusions	1
II	Recommendations	3
III	Introduction	5
IV	Industry Categorization	37
V	Water Use and Waste Characterization	41
VI	Selection of Pollutant Parameters	141
VII	Control and Treatment Technology	149
VIII	Cost Energy and Non-Water Quality Aspects	187
IX	Effluent Reduction Attainable Through the Application of the Best Practicable Control Technology Currently Available	237
X	Effluent Reduction Attainable Through Application of the Best Available Technology Economically Achievable	251
XI	New Source Performance Standards and Pretreatment Standards	259
XII	Acknowledgements	265
XIII	References	267
XIV	Glossary	271

LIST OF FIGURES

Figure		Page
1	Barite Processing Facilities	14
2	Fluorspar Deposits	18
3	Potash Deposits	19
4	Borate Operations	20
5	Lithium, Calcium and Magnesium	22
6	Rock Salt Mines and Wells	28
7	Phosphate Mining and Processing Locations	30
8	Sulfur Deposts	33
9	Barite Mining and Processing (Dry Grinding Process)	45
10	Barite Mining and Processing (Wet Process)	47
11	Barite Mining and Processing (Flotation Process)	51
12	Fluorspar Mining and Processing (HMS Process)	58
13	Fluorspar Mining and Processing Flotation Process)	61
14	Minerals Recovery from Searles Lake	70
15	Minerals Recovery at Great Salt Lake	73
16	Lithium Salt Recovery Natural Brine, Silver Peak Operations	76
17	Borate Mining and Processing	78
18	Potassium Chloride Mining and Processing	82
19	Langbeinite Mining and Processing	83
20	Potash Recovery by Solution Mining of Sylvinite	87
21	Trona Ore Processing by the Monohydrate Process	90
22	Trona Ore Processing by the Sesquicarbonate Process	91
23	Sodium Sulfate from Brine Wells	96
24	Rock Salt Mining and Processing	99
25	Phosphate Mining and Processing (Eastern)	106
26	Normal distribution of log TSS for a phosphate slime pond discharge	111
27	Phosphate Mining and Processing (Western)	115
28	Sulfur Mining and Processing (Frasch Process)	120
29	Mineral Pigments Mining and Processing	133
30	Spodumene Mining and Processing (Flotation Process)	136
31	Settling Pond Performance Distribution of Values from Industry Segment	172
32	Calcium Phosphate Solubility as a Function of pH	176
33	Bleedwater Treating Facility Type 1	180
34	Bleedwater Treating Facility Type 2	181

LIST OF TABLES

Table		Page
1	Recommended limits and standards for the Mineral Mining and Processing Industry	4
2	Data Base	9
3	Production and Employment	13
4	Industry Categorization	39
5	Sulfur Facilities, Comparison of Discharges	131
6	Settling Pond Performance	170
7	Summary of Technology Applications, Limitations and Reliability	183
8	Capital Investment and Energy Consumption of Present Waste Water Treatment Facilities	189
9	Cost for a Representative Facility (Barite, Wet Process)	196
10	Cost for a Representative Facility (Barite, Flotation Process)	198
11	Cost for a Representative Facility (Fluorspar, HMS Process)	201
12	Cost for a Representative Facility (Fluorspar, Flotation Process)	203
13	Cost for a Representative Facility (Borates)	206
14	Cost for a Representative Facility (Potash, Carlsbad Operations)	208
15	Cost for a Representative Facility (Potash, Moab Operations)	209
16	Cost for a Representative Facility (Trona Ore Mining)	212
17	Cost for a Representative Facility (Rock Salt)	216
18	Cost for a Representative Facility (Phosphate Rock, Eastern)	220
19	Cost for a Representative Facility (Phosphate Rock, Western)	222
20	Cost for a Representative Facility (Sulfur, Anhydrite)	225
21	Cost for a Representative Facility (Sulfur, on-shore salt dome)	227
22	Cost for a Representative Facility (Sulfur, off-shore salt dome)	229
23	Cost for a Representative Facility (Mineral Pigments)	232
24	Cost for a Representative Facility (Lithium Minerals)	234
25	Conversion Table	278

SECTION I

CONCLUSIONS

For purposes of establishing effluent limitations guidelines and standards of performance, and for ease of presentation, the mineral mining industry has been divided into three segments to be published in three volumes: minerals for the construction industry; minerals for the chemical and fertilizer industries; and clay, ceramic, refractory and miscellaneous minerals. These divisions reflect the end uses of the minerals after mining and beneficiation. In this volume covering minerals for the Chemical and Fertilizer Industries, the 12 minerals are grouped into 12 production subcategories for reasons explained in Section IV.

Based on the application of best practicable technology currently available, 7 of the 12 production subcategories under study can be operated with no discharge of process generated waste water pollutants to navigable waters under normal operating conditions. With the best available technology economically achievable, 7 of the 12 production subcategories can be operated with no discharge of process generated waste water pollutants to navigable waters under normal operating conditions. No discharge of process generated waste water pollutants to navigable waters is achievable as a new source performance standard for all production subcategories except fluorspar (flotation), phosphate rock (flotation), rock salt, sulfur (salt dome) and lithium minerals. Mine water and contaminated plant runoff are addressed separately.

This study includes 12 minerals for the chemical and fertilizer industries of Standard Industrial Classification (SIC) categories, 1472, 1473, 1474, 1475, 1476, 1477, 1479, 1499, and 3295 with significant waste discharge potential as listed below with the corresponding SIC code.

1. Barite (1472)
2. Fluorspar (1473)
3. Salines from Brine Lakes (1474)
4. Borates (1474)
5. Potash (1474)
6. Trona Ore (1474)
7. Phosphate Rock (1475)
8. Rock Salt (1476)
9. Sulfur (Frasch) (1477)
10. Mineral Pigments (1479)

11. Lithium Minerals (1479)
12. Sodium Sulfate (1474)

SECTION II

RECOMMENDATIONS

The recommended effluent limitations guidelines and the suggested technologies are listed in Table 1. pH should be maintained between 6.0 and 9.0 units at all times.

The pretreatment limitations will not limit total suspended solids, unless there is a problem of sewer plugging, in which case 40 CFR 128 131(c) applies. Limitations for parameters other than TSS are recommended to be the same for existing sources as best practicable control technology currently available and new sources as new source performance standards.

Table 1

Recommended Limits and Standards for the Mineral Mining and Processing Industry

The following apply to process waste water except where noted

Subcategory	BPCTCA max. avg. of 30 consecutive days	BPCTCA max. for any one day	BATEA and NSPS max. avg. of 30 consecutive days	BATEA and NSPS max. for any one day
Barite				
Dry	No discharge		No discharge	
Wet & Flotation	No discharge		No discharge	
Mine Drainage (acid)	TSS 35 mg/l dis. Fe 0.3 mg/l	TSS 70 mg/l dis. Fe 0.6 mg/l	TSS 20 mg/l dis. Fe 0.3 mg/l	TSS 40 mg/l dis. Fe 0.6 mg/l
Mine Drainage (non acid)		TSS 30 mg/l		TSS 30 mg/l
Fluorspar				
Heavy Media Separation & Drying and Pelletizing	No discharge		No discharge	
Flotation	TSS 0.6 kg/kkg F 0.2 kg/kkg	TSS 1.2 kg/kkg F 0.4 kg/kkg	TSS 0.4 kg/kkg F 0.1 kg/kkg	TSS 0.8 kg/kkg F 0.2 kg/kkg
Mine Drainage		TSS 30 mg/l		TSS 30 mg/l
Salines from Brine Lakes,, Borax, Potash, Trona (process waste water and mine drainage), & Sodium Sulfate**	No discharge		No discharge	
Rock Salt (process waste water and mine drainage)	TSS 0.02 kg/kkg	TSS 0.04 kg/kkg	TSS 0.002 kg/kkg	TSS 0.004 kg/kkg
Salt pile runoff			No discharge	
Phosphate Rock				
Flotation unit process and mine drainage	TSS 30 mg/l Total Ra226 5 pci/l	TSS 70 mg/l	TSS 30 mg/l Total Ra226 5 pci/l	TSS 70 mg/l
Other unit processes	No discharge		No discharge	
Sulfur (Frasch)				
Anhydrite	No discharge			
Salt domes (land and marsh operations well bleed water)	TSS 50 mg/l*	TSS 100 mg/l*	TSS 30 mg/l*	TSS 60 mg/l*
Land available	S 1 mg/l	S 2 mg/l	S 1 mg/l	S 2 mg/l
Land availability limitations	S 5 mg/l	S 10 mg/l	S 1 mg/l	S 2 mg/l
Well seal water	No discharge of elemental sulfur		TSS 30 mg/l* S 1 mg/l	TSS 60 mg/l* S 2 mg/l
Mineral Pigments	No discharge		No discharge	
Mine drainage		TSS 30 mg/l		TSS 30 mg/l
Lithium* (process waste water and mine drainage)**	TSS 0.11 kg/kkg F 0.017 kg/kkg	TSS 0.22 kg/kkg F 0.034 kg/kkg TSS 30 mg/l	TSS 0.11 kg/kkg F 0.008 kg/kkg	TSS 0.22 kg/kkg F 0.016 kg/kkg TSS 30 mg/l

pH 6-9 for all subcategories
No discharge - No discharge of process waste water pollutants
kg/kkg - kg of pollutant/kkg of product
* standard is to apply as net if oxidation ditches are used and intake is from the same navigable water as the discharge.
** standards are to be applied as net if discharge is to the same navigable water as brine intake
*** kg of pollutant/kkg of ore processed
BPCTCA - best practicable control technology currently available
BATEA - best available technology economically achievable
NSPS - new source performance standard
dis. - dissolved

SECTION III

INTRODUCTION

PURPOSE AND AUTHORITY

The United States Environmental Protection Agency (EPA) is charged under the Federal Water Pollution Control Act Amendments of 1972 with establishing effluent limitations which must be achieved by point sources of discharge into the navigable water of the United States.

Section 301(b) of the Act requires the achievement by not later than July 1, 1977, of effluent limitations for point sources, other than publicly owned treatment works, which are based on the application of the best practicable control technology currently available as defined by the Administrator pursuant to Section 304(b) of the Act. Section 301(b) also requires the achievement by not later than July 1, 1983, of effluent limitations for point sources, other than publicly owned treatment works, which are based on the application of the best available technology economically achievable which will result in reasonable further progress toward the national goal of eliminating the discharge of all pollutants, as determined in accordance with regulations issued by the Administrator pursuant to Section 304(b) to the Act. Section 306 of the Act requires the achievement by new sources of a Federal standard of performance providing for the control of the discharge of pollutants which reflects the greatest degree of effluent reduction which the Administrator determines to be achievable through the application of the best available demonstrated control technology, processes, operating methods, or other alternatives, including, where practicable, a standard permitting no discharge of pollutants. Section 304(b) of the Act requires the Administrator to publish within one year of enactment of the Act, regulations providing guidelines for effluent limitations setting forth the degree of effluent reduction attainable through the application of the best practicable control technology currently available and the degree of effluent reduction attainable through the application of the best control measures and practices achievable including treatment techniques, process and procedure innovations, operation methods and other alternatives. The regulations proposed herein set forth effluent limitations guidelines pursuant to Section 304(b) of the Act for the mining of minerals for the chemical and fertilizer industries segment of the mineral mining and processing point source category.

Section 306 of the Act requires the Administrator, within one year after a category of sources is included in a list published pursuant to Section 306(b) (1) (A) of the Act, to propose regulations establishing Federal standards of performances for new sources within such categories. The Administration published in the Federal Register of January 16, 1973 (38 F.R. 1624), a list of 27 source categories. Publication of an amended list will constitute announcement of the Administrator's intention of establishing, under Section 306, standards of performance applicable to new sources within the mineral mining and processing industry. The list will be amended when proposed regulations for Mineral Mining and Processing are published in the Federal Register.

SUMMARY OF METHODS

The effluent limitations guidelines and standards of performance proposed herein were developed in a series of systematic tasks. The mineral mining and processing industry was first studied to determine whether separate limitations and standards are appropriate for different segments within a point source category. Development of reasonable industry categories and subcategories, and establishment of effluent guidelines and treatment standards requires a sound understanding and knowledge of the Mineral Mining and Processing Industry, the processes involved, waste water generation and characteristics, and capabilities of existing control and treatment methods.

This report describes the results obtained from application of the above approach to the mining of minerals for the chemical and fertilizer industries segment of the mineral mining and processing industry. Thus, the survey and testing covered a wide range of processes, products, and types of wastes.

The products covered in this report are listed below with their SIC designations:

a. Barite (1472 and 3295)
b. Fluorspar (1473 and 3295)
c. Salines from Brine Lakes (1974)
d. Borax (1474)
e. Potash (1474)
f. Trona Ore (1474)
g. Phosphate Rock (1475)
h. Rock Salt (1476)
i. Sulfur (1477)
j. Mineral Pigments (1479)
k. Lithium Minerals (1479)
l. Sodium Sulfate (1474)

Categorization and Waste Load Characterization

The effluent limitation guidelines and standards of performance proposed herein were developed in the following manner. The point source category was first categorized for the purpose of determining whether separate limitations and standards are appropriate for different segments within a point source category. Such subcategorization was based upon raw material used, product produced, manufacturing process employed, and other factors. The raw wastes characteristics for each subcategory were then identified. This included an analysis of (1) the source and volume of water used in the process employed and the sources of waste and waste waters in the facility; and (2) the constituents of all waste waters including harmful constituents and other constituents which result in degradation of the receiving water. The pollutants of waste waters which should be subject to effluent limitations guidelines and standards of performance were identified.

Treatment and Control Technologies

The full range of control and treatment technologies existing within each subcategory was identified. This included an identification of each control and treatment technology, including both in-facility and end-of-process technologies, which are existent or capable of being designed for each subcategory. It also included an identification of the amount of pollutants (including thermal) and the characteristics of pollutants resulting from the application of each of the treatment and control technologies. The problems, limitations and reliability of each treatment and control technology were also identified. In addition, the non-water quality environmental impact, such as the effects of the application of such technologies upon other pollution problems, including air, solid waste, noise and radiation were also identified. The energy requirements of each of the control and treatment technologies were identified as well as the cost of the application of such technologies.

Data Base

Cost information contained in this report was obtained directly from industry during facility visits, from engineering firms and equipment suppliers, and from the literature.

The data for identification and analyses were derived from a number of sources. These sources included EPA research information, published literature, qualified technical consultation, on-site visits and interviews at numerous

mining and processing facilities throughout the U.S., interviews and meetings with various trade associations, and interviews and meetings with various regional offices of the EPA. All references used in developing the guidelines for effluent limitations and standards of performance for new sources reported herein are included in Section XIII of this report.

Table 2 summarizes the data base for the various subcategories studied in this volume.

Data was obtained from 82 percent of the facilities in this segment of the mineral mining and processing industry. Sixty four percent of the facilities were visited and fifteen percent were sampled to verify data.

Facility Selection

The following selection criteria were developed and used for the selection of facilities.

Discharge effluent quantities

Facilities with low effluent quantities or the ultimate of no discharge of process waste water pollutants were preferred. This minimal discharge may be due to reuse of water, raw material recovery and recycling, or to use of evaporation. The significant criterion was minimal waste added to effluent streams per weight of product manufactured. The amounts of wastes considered here were those added to waters taken into the facility and then discharged.

Land utilization

The efficiency of land use was considered.

Air pollution and solid waste control

The facilities must have possessed overall effective air and solid waste pollution control where relevant in addition to water pollution control technology. Care was taken to insure that all facilities chosen have minimal discharges into the environment and that these sites are not those which are exchanging one form of pollution for another of the same or greater magnitude.

Effluent treatment methods and their effectiveness

Facilities selected shall have in use the best currently available treatment methods, operating controls, and operational reliability. Treatment methods considered

TABLE 2
DATA BASE

Subcategory	No. Plants	No. of Plants: Visited	Data Available	Verification Sampling
Barite				
Dry	9	4	8	*
Wet	14	7	14	*
Flotation	4	3	4	1
Fluorspar				
HMS	6	4	6	*
Flotation	6	4	5	2
Drying and Pelletizing	2	1	2	*
Salines from Brine Lakes	3	3	3	*
Borax	1	1	1	*
Potash	5	4	5	*
Trona Ore	4	2	4	*
Phosphate Rock				
Eastern	22	21	20	5
Western	6	6	6	2
Rock Salt	21	11	15	3
Sulfur				
Anhydrite	2	1	2	*
On-Shore	9	7	9	5
Off-Shore	2	1	1	1
Mineral Pigments	11	3	3	*
Lithium Minerals	2	2	2	2
Soidum Sulfate	6	2	2	*
Total	136	87	112	22

*There is no discharge of process waste water in the subcategories under normal operating conditions.

included basic process modifications which significantly reduce effluent loads as well as conventional treatment methods.

Facility facilities

All facilities chosen had all the facilities normally associated with the production of the specific product(s) in question. Typical facilities generally were facilities which have all their normal process steps carried out on-site.

Facility management philosophy

Facilities were preferred whose management insists upon effective equipment maintenance and good housekeeping practices. These qualities are best identified by a high operational factor and facility cleanliness.

Geographic location

Factors which were considered include facilities operating in close proximity to sensitive vegetation or in densely populated areas. Other factors such as land availability, rainfall, and differences in state and local standards were also considered.

Raw materials

Differences in raw materials purities were given strong consideration in cases where the amounts of wastes are strongly influenced by the purity of raw materials used. Several facilities using different grades of raw materials were considered for those minerals for which raw material purity is a determining factor in waste control.

Diversity of processes

On the basis that all of the above criteria are met, consideration was given to installations having a multiplicity of manufacturing processes. However, for sampling purposes, the complex facilities chosen were those for which the wastes could be clearly traced through the various treatment steps.

Production

On the basis that other criteria are equal, consideration was given to the degree of production rate scheduled on water pollution sensitive equipment.

Product purity

For cases in which purity requirements play a major role in determining the amounts of wastes to be treated and the degree of water recycling possible, different product grades were considered for subcategorization.

GENERAL DESCRIPTION OF INDUSTRY BY PRODUCT

All underlined numbers appearing in a chemical formula represent subscripts (e.g. H_2O is water). The materials in SIC Codes 1472 through 1477 and 1479 include a number of different mineral compositions and have major use in the chemical and fertilizer industries. Mining practices include most all of the conventional surface and underground methods. The extent of processing varies widely and the complexity is dependent upon the particular mineral or product being recovered. High water consumption is associated with most of these production facilities with wastes generated in the form of overburden, slimes, and tailings.

The methods of mining and processing are generally common for minerals such as barite, fluorspar, phosphate, and lithium minerals. Open pit mining is more prevalent, although some underground mines are in operation. Processing may include combinations of crushing, grinding, screening, washing, classification, flotation, magnetic separation or filtering and drying. Waste treatment usually includes flocculation and settling ponds with a high recycle of process water.

A number of these mineral or chemical products are extracted from brine lakes located in the western United States. Materials such as borax, natural soda ash, lithium salts, salt cake and potash are produced from the brines by a series of processing steps involving evaporation and selective precipitation. Production from other than the brines occurs for the borates and potash. Deposits of these materials are mined in open pits and/or underground and are processed by various recovery methods such as flotation, evaporation, precipitation, and crystallization.

The rock salt and trona deposits are of a very high purity and are mined from underground operations. Processing of the salt consists primarily of crushing and sizing while the trona ore (impure sodium carbonate) is refined through a series of impurity removal steps, evaporation and crystallization.

The major source of sulfur is salt domes with lesser quantities coming from anhydrite deposits. The mining of sulfur is accomplished by the Frasch or hot water process. In the Frasch process, the sulfur is melted underground by pumping hot water to the formations. The molten material is removed to the surface and either stored or shipped in the liquid form.

The 1972 production and employment figures for the industries mining and processing minerals for the chemical and fertilizer industries were derived either from the Bureau of the Census (U.S. Department of Commerce) publications or the Commodity Data Summaries (1974) Appendix I to Mining and Minerals Policy, Bureau of Mines, U.S. Department of the Interior. These figures are tabulated in Table 3.

BARITE (SIC 1472 & 3295)

Barite, which is also called barytes, tiff, cawk or heavy spar, is almost pure barium sulfate and is the chief source of barium and its compounds. Barite deposits are widely distributed throughout the world, and can be classified into three main types: (a) vein and cavity filling deposits; (b) bedded deposits; and (c) residual deposits.

(a) Vein and cavity-filling deposits are those in which the barite and associated minerals occur along fault lines, bedding planes, breccia zones and solution channels. Barite deposits in the Mountain Pass district of California are of this variety.

(b) Bedded deposits are those in which the barite is restricted to certain beds or a sequence of beds in sedimentary rocks. The major commercial deposits in Arkansas, Missouri, California and Nevada are bedded deposits.

(c) Residual deposits occur in unconsolidated material that are formed by the weathering of pre-existing deposits. Such deposits are abundant in Missouri, Tennessee, Georgia, Virginia and Alabama where the barite is commonly found in a residuum of limestone and dolomites.

Mining methods used in the barite industry vary with the type and size of deposit and type of product made. Figure 1 displays the barite processing facilities in the United States.

Table 3
Production & Employment

SIC Code	Product	1972 Production kkg (tons)	Employment
1472	Barite	822,000 (906,000)	1,025
1473	Fluorspar	228,000 (251,000)	270
1474	Borates	1,020,000 (1,120,000)	1,800
1474	Potash (K_2) equiv.)	2,410,000 (2,660,000)	1,200
1474	Sods Ash (Trona only)	2,920,000 (3,220,000)	1,070
1474	Sodium Sulfate	636,000 (701,000)	100
1475	Phosphates	37,000,000 (40,800,000)	4,200
1476	Salt (mined only)	12,920,000 (14,200,000)	2,800
1477	Sulfur (Frasch)	7,300,000 (8,040,000)	2,900
1479	Mineral Pigments	63,500 (70,000)	Unknown
1479	Lithium Minerals	Withheld	approx. 250

FIGURE 1
BARITE PROCESSING PLANTS

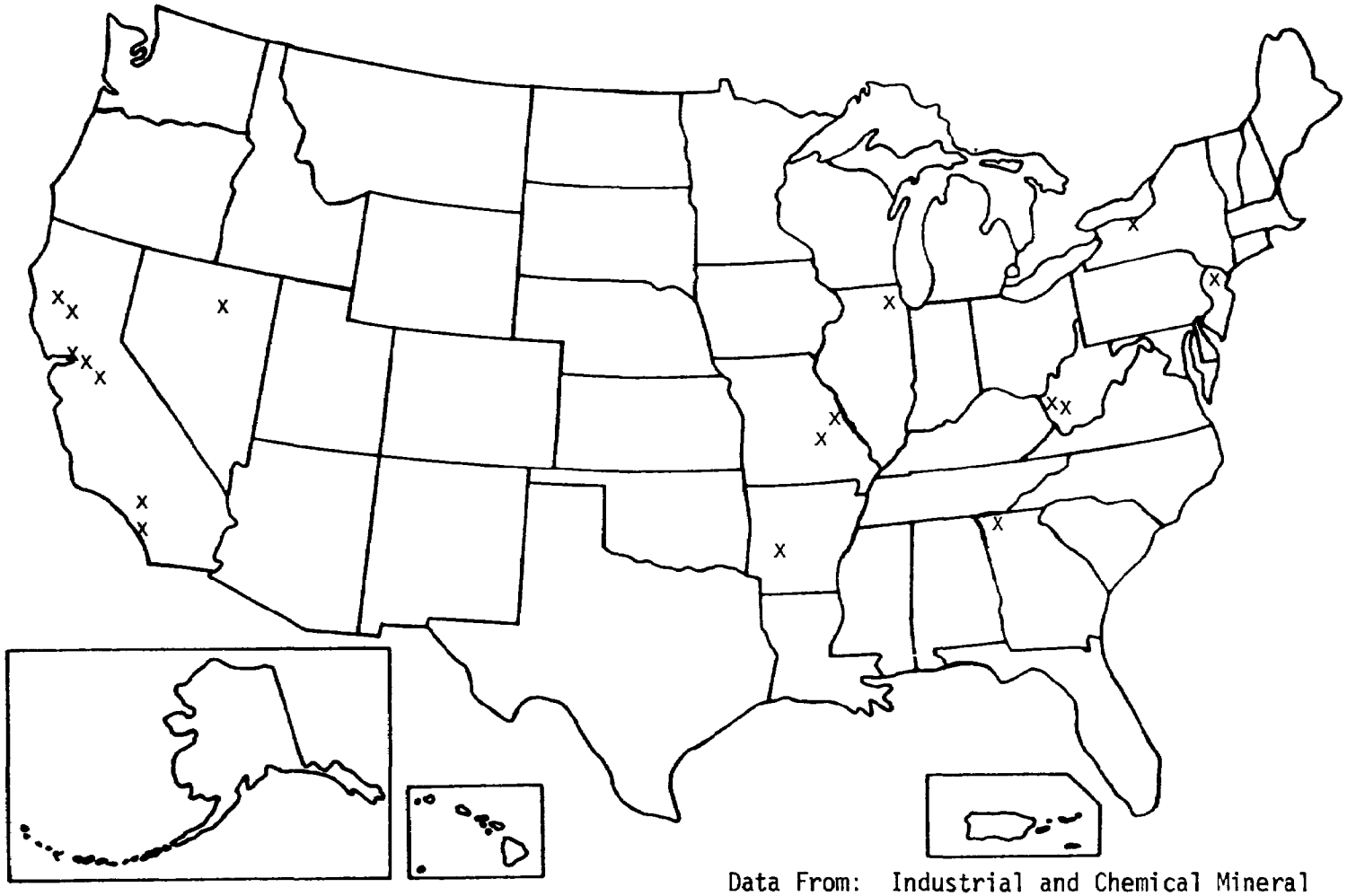

Data From: Industrial and Chemical Mineral Chart - p. 184
The National Atlas of the USA
USGS - 1970

Residual Barite in Clay

Residual barite in clay is dug with power shovels from open pits (Missouri, Tennessee, Georgia). Stripping, when overburden is heavy, is removed by dragline, tractors, and scrapers or power shovel. Overburden in Missouri is rarely over 2 or 3 feet, but in Georgia it may range from 10 to 50 feet. Hydraulic mining has been used at times in Georgia where overburden has been heavy, where troublesome limestone pinnacles have been encountered, or where tailing ponds have been reclaimed.

Barite Veins or Beds

Barite veins or beds are mined underground (Nevada, Tennessee, and Arkansas).

Massive Barite

Massive barite is blasted from open quarries with little or no subsequent sorting or beneficiation (Nevada).

Methods used in the beneficiation of barite depend both on the nature of the ore and on the type of product to be made. For the largest use, well-drilling mud, the only requirements are fine grind (325 mesh), chemical inactivity, and high specific gravity. White color is not essential, and purity is not important in many cases.

The essential features of the milling of residual barite in clay (Missouri, Georgia, and Tennessee, in part) include washing to remove the clay, hand picking to save lump barite, jigging to separate coarse concentrates, and tabling to recover fine concentrates. Further refinements may include magnetic separation to remove iron from concentrate fines and froth flotation to save the very finest barite. In Missouri, where the ore is so soft that crushing is unnecessary and individual deposits tend to be small, simple and inexpensive facilities that can be easily dismantled and moved are common. In Georgia, the ore is hard and usually must be crushed to free the barite from the gangue; facilities tend to be larger with several stages of crushing, screening, jigging and tabling.

Missouri mills may consist essentially of only a double log washer, trommel, and jigs, but there are a few larger mills. Hard, vein barite is usually pure enough to be shipped without beneficiation except by hand sorting.

The development of froth flotation methods for barite made deposits, such as those of Arkansas and Georgia, commercially valuable and greatly increased recovery

possibilities from other deposits. The Arkansas ore is particularly difficult to treat, since the barite is finely divided and so intimately mixed with the impurities that grinding to 325 mesh is necessary for complete liberation of the component minerals. The ground ore is treated by froth flotation. Concentrates are filtered and dried in rotary kilns at temperatures high enough to destroy organic reagents that might interfere with use in drilling muds. In Georgia, flotation is being used to recover barite fines from washer tailings.

Methods used in grinding barite depend upon the nature of the product to be ground and upon the use for which the ground barite is to be sold. If white color is not important, as for well-drilling mud and off-color filler uses, iron grinding surfaces may be used. Where the color is naturally a good white and no bleaching is required, grinding should be done with iron-free grinding surfaces, such as a dry pebble mill in closed circuit with an air separator.

The principal use of barite in the United States is as a weighting agent for drilling muds used in the oil industry. In addition, ground barite is used in the manufacture of glass and as a heavy filler in a number of products where additional weight is desirable.

FLUORSPAR (SIC 1473)

Fluorine is derived from the mineral fluorite, commonly known as fluorspar. Steadily increasing quantities are required in steel production where fluorite is useful as a slag thinner; in aluminum production, where cryolite, another fluorine mineral, is necessary to dissolve alumina for the electrolytic cells; and in ceramics, where fluorite is a flux and opacifier. Fluorine demand is strong for an important group of fluorocarbon chemicals which are formulated into refrigerants, plastics, solvents, aerosols, and many other industrial products.

In the Illinois-Kentucky district the country rock is limestone, shale, and sandstone. Fluorspar occurs as veins along faults ranging in thickness from a mere film to a width or more than 30 feet and in extensive flatlying replacement-type deposits in limestone. Residual deposits, resulting from weathering of fluorite-bearing veins, are also fairly common in the district and often indicate the presence of vein deposits at greater depth.

In the Western States, fluorspar occurs under a wide variety of conditions----as fillings in fractures and shear zones forming more or less well-defined veins and as replacements in the country rock. Much occurs in igneous formations. Figure 2 depicts the locations of barite deposits in the United States.

Mining is done by shafts, drifts, and open cuts with the mines ranging in size from small operations using mostly hand-operated equipment to large fully mechanized mines. Mining methods follow the practice of metal mines, adopting the method best suited to conditions. Top slicing, cut-and-fill, shrinkage, and open stoping are among the methods commonly used. Bedded deposits are usually worked by a room-and-pillar system. Some of the large mines are extensively mechanized, using diesel-powered hauling and loading equipment.

The crude ore requires beneficiation to yield a finished product. Processing techniques range from rather simple methods, such as hand sorting, washing, screening and gravity separation by jigs and tables, to sink-float and froth-flotation processes. The flotation process permits recovery of the lead, zinc, and barite minerals often associated with the fluorspar ores.

Flotation is used where a product of fine particle size is desired, such as ceramic- and acid-grade fluorspar. The heavy-medium or sink-float process is usually employed where a coarse product, such as metallurgical-grade gravel is desired.

SALINES FROM BRINE LAKES (SIC 1474)

A number of the potash, soda and borate minerals of SIC 1474 are produced from the brines of lakes in the arid part of the West that have evaporated over long periods of time to a state of high concentration of minerals. The significant commercial exploitation of these lake brines is at Searles Lake in California and Great Salt Lake in Utah. Two facilities are operated at Searles Lake that employ a complex series of evaporation steps to recover minerals and, in some instances, produce other derived products such as bromine and boric acid. The process sequence is called the "Trona Process", which should not be confused with trona ore (natural sodium carbonate) mining that takes place in Sweetwater County, Wyoming. One facility operates an evaporative process at Great Salt Lake that produces sodium sulfate, salt, potassium sulfate, and bittern liquors. Figure 3 shows the potash deposits in the United States including brine recovery. Figure 4 shows all of the borate

FIGURE 2
FLUORSPAR DEPOSITS

From Industrial and Chemical Minerals chart-pg.184
The National Atlas of The USA
USGS-1970

FIGURE 3
POTASH DEPOSITS

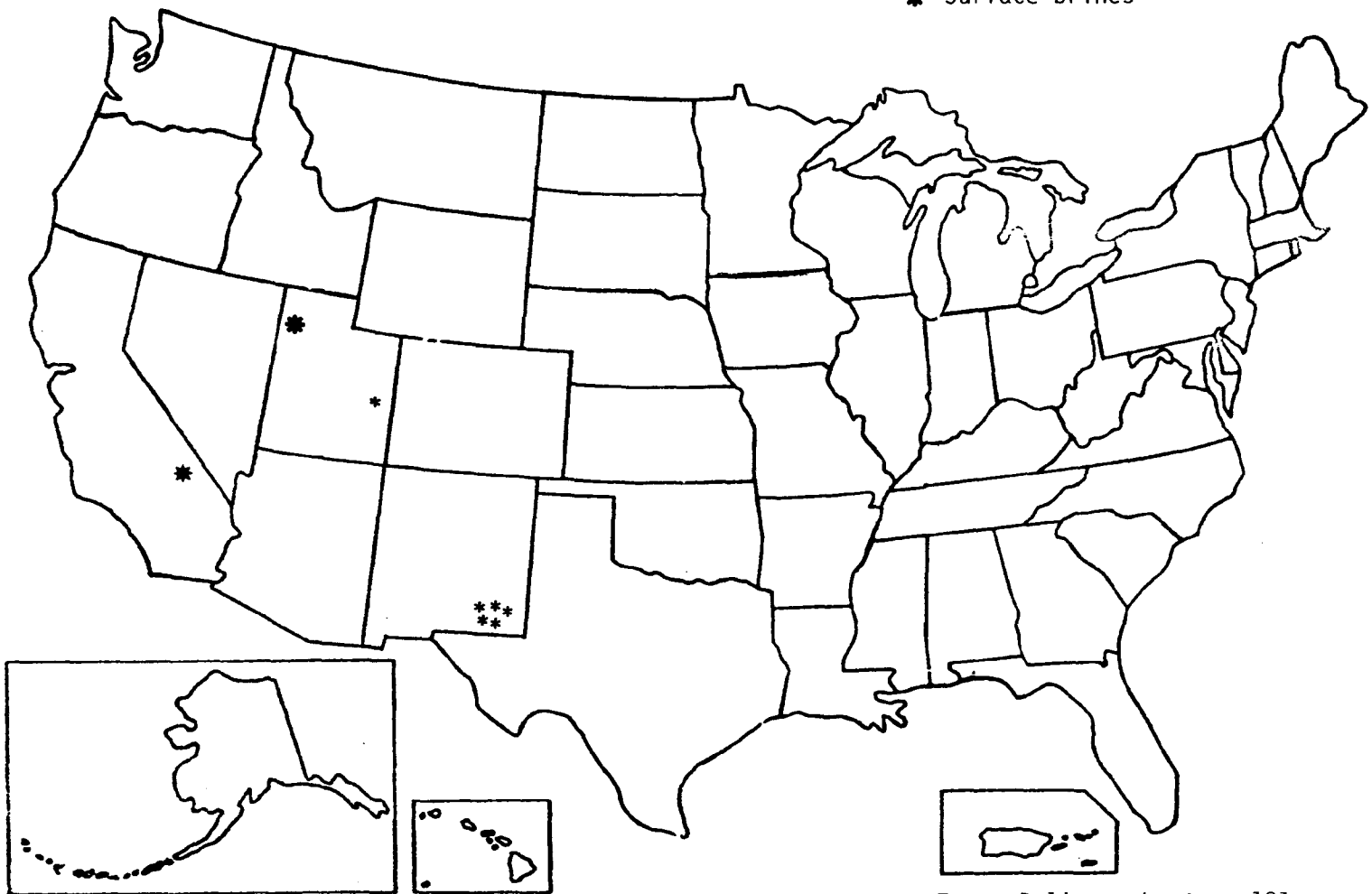

From Salines chart-pg.181
The National Atlas of The USA
USGS-1970

FIGURE 4

BORATE OPERATIONS

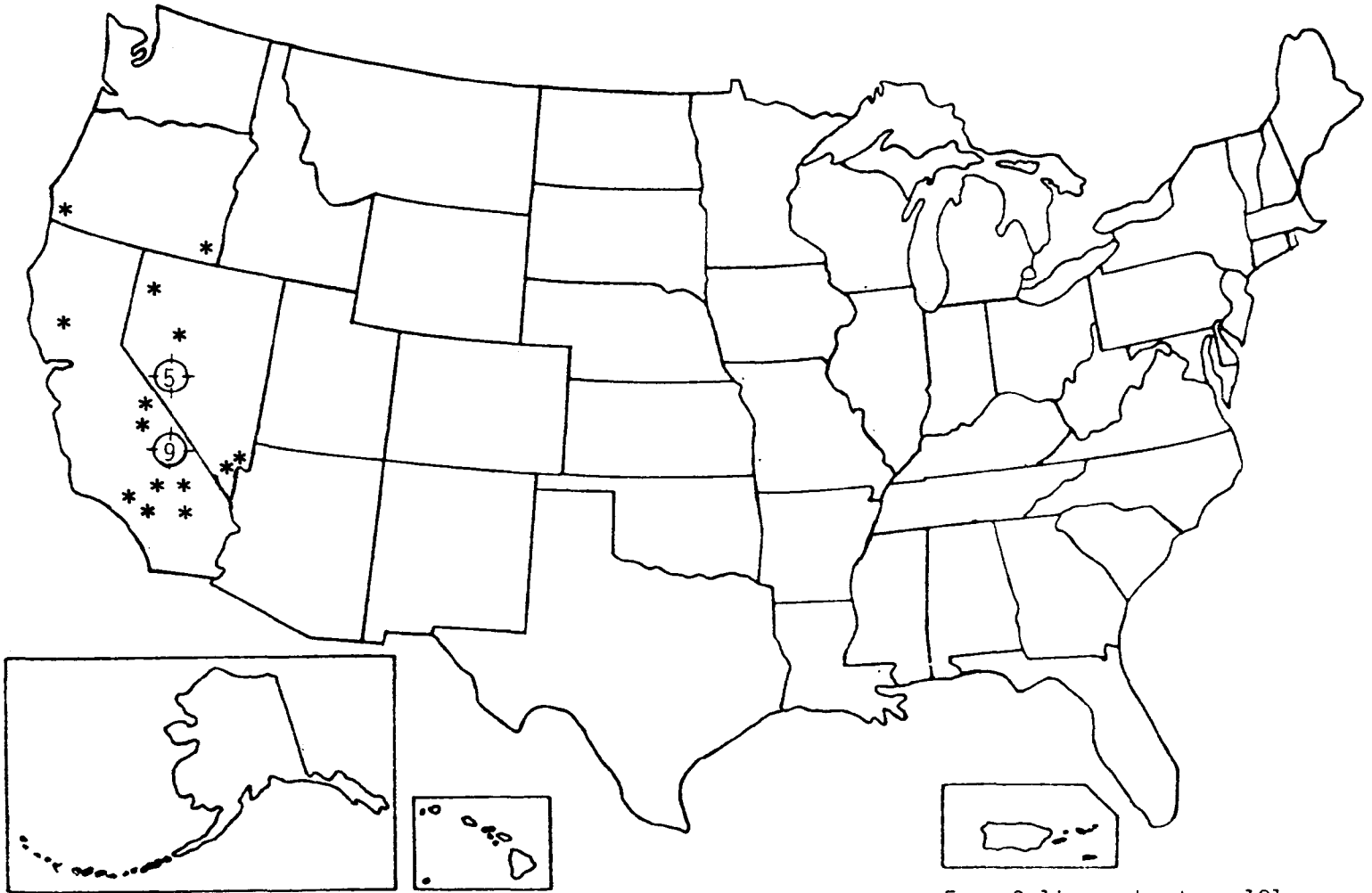

From Salines chart-pg.181
The National Atlas of The USA
USGS-1970

deposits. Figure 5 shows the calcium and magnesium brine locations.

BORATES (SIC 1474)

While boron is not an extremely rare element, few commercially attractive deposits of boron minerals are known. It is estimated that about half of the commercial world boron reserves, estimated at about 72 million tons of boron, are in southern California as bedded deposits of borax (sodium borate) and colemanite (calcium borate), or occur as solutions of boron minerals in Searles Lake brines. Figure 4 shows the location of the United States operations.

The United States is the largest producer of boron, supplying 71 percent of the world demand in 1968, and also the largest consumer, requiring about 36 percent of the world output.

Many minerals contain boron, but only a few are commercially valuable as a source of boron. The principal boron minerals are borax (tincal), $Na_2B_4O_7 \cdot 10H_2O$; kernite (rasorite), $Na_2B_4O_7 \cdot 4H_2O$; colemanite (borocalcite), $Ca_2B_6O_{11} \cdot 5H_2O$; ulexite (boronatrocalcite), $CaNaB_5O_9 \cdot 8H_2O$; priceite (pandermite), $5CaO \cdot 6B_2O_3 \cdot 9H_2O$; boracite (stassfurtite), $Mg_7Cl_2B_{16}O_{30}$; and sassolite (natural boric acid), H_3BO_3. The sodium borate minerals borax and kernite (rasorite) constitute the bulk of production in the United States. A small quantity of colemanite and ulexite is also mined.

The borate deposit in the Kramer district of California is a large, irregular mass of bedded crystalline sodium borates ranging from 80 to about 1,000 feet in thickness. Borax, locally called tincal, and kernite are the principal minerals. Shale beds containing colemanite and ulexite lie directly over and under the sodium borate body.

One company mines the ore by open-pit methods. It is blended and crushed to produce a minus 3/4 inch feed of nearly constant boric oxide (B_2O_3) content. Weak borax liquor from the refinery is mixed with the crushed ore and heated nearly to boiling point in steam-jacketed tanks to dissolve the borax. The concentrated borax liquor goes to a series of thickeners, is filtered and pumped to vacuum crystallizers. One of the crystallizers produces borax pentahydrate, and the other produces borax decahydrate.

Sodium borates are also extracted from Searles Lake brines by a company whose primary products are soda ash, salt cake, and potash. Searles Lake is a dry lake covering about 34 square miles in San Bernardino County, California. Brines pumped from beneath the crystallized surface of the lake are

FIGURE 5
LITHIUM, CALCIUM & MAGNESIUM

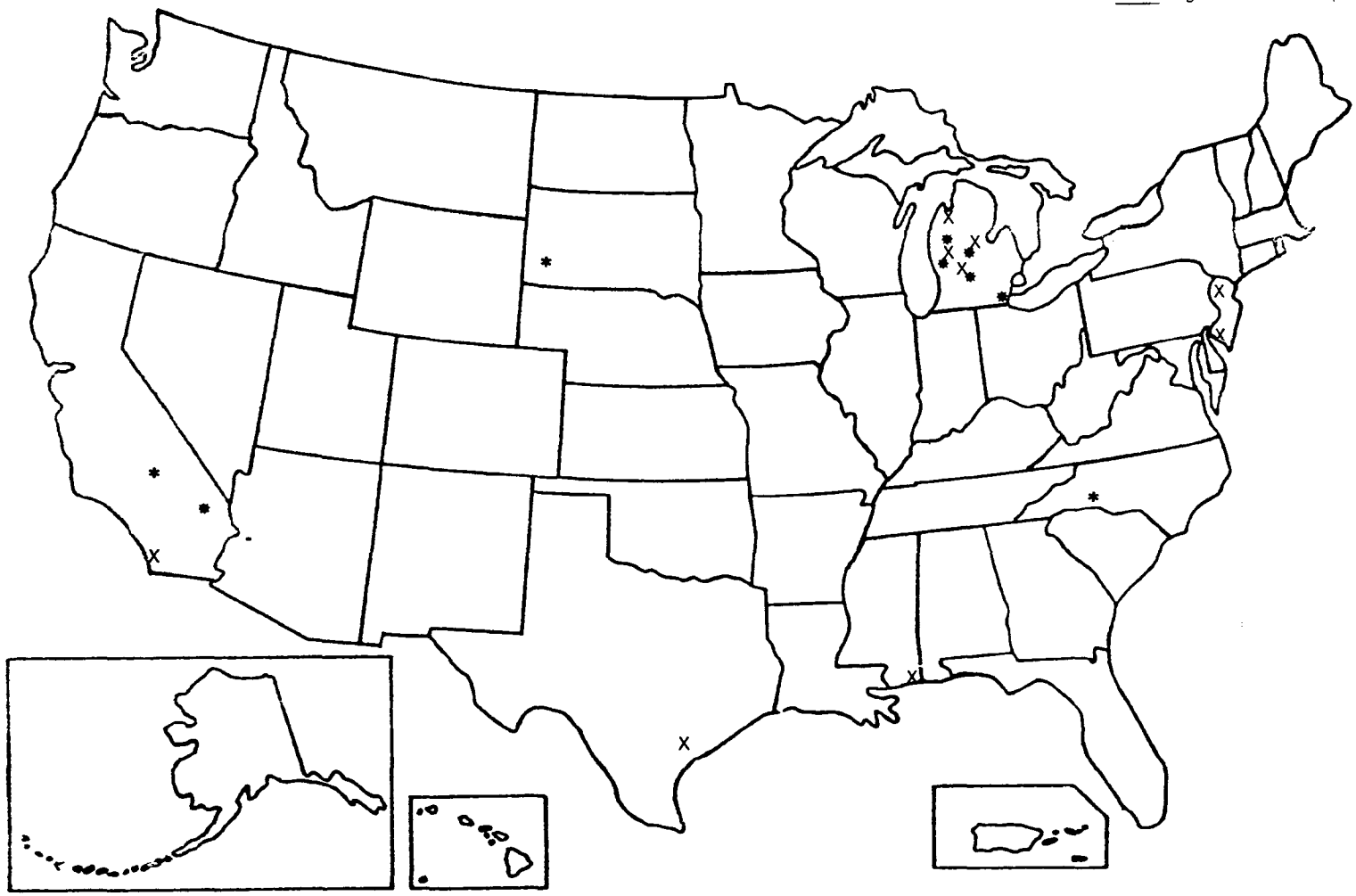

From Salines Chart-pg.181
The National Atlas of The USA
USGS-1970

processed by carbonation, evaporation, and crystallization procedures, producing an array of products including boron compounds.

Ferroboron is a boron iron alloy containing 0.2 to 24 percent boron. The alloys are marketed in various grain sizes. Boric oxide is a hard, brittle, colorless solid resembling glass. It is marketed in powder or granular forms.

Borax ($Na_2B_4O_7 \cdot 10H_2O$), the most commonly known boron compound, is normally marketed with 99.5 percent purity. It is also available in technical, U.S.P., and special-quality grades. In addition to the decahydrate shown above, the pentahydrate ($Na_2B_4O_7 \cdot 5H_2O$) and anhydrous forms are sold. The various grades are available in crystalline, granular, or powder forms. Boric acid (H_3BO_3) is a colorless, odorless, crystalline solid sold in technical, U.S.P., and special quality grades. It is available in crystalline, granular, or powder forms.

Boron compounds are mined in a remote desert area where tailings and waste dumps do not encroach on residential, industrial, or farm land. Atmospheric pollution is not a problem, although some processing odors and dust are produced.

POTASH (SIC 1474)

The term "potash" was derived from the residues - pot ashes - originally obtained by evaporating, in iron pots, solutions leached from wood ashes. The present worldwide meaning of potash is twofold. When used as a noun, it represents K_2O equivalent, and when used as an adjective, it means potassium compounds or potassium-bearing materials. Sylvinite, the major ore for producing potash, comes from underground mines in New Mexico, Canada and Europe, and is a mineralogical mixture of sylvite (KCl) and halite (NaCl).

Domestic sources for potassium are of two types: brines and bedded deposits. Currently 84 percent of domestic production comes from the bedded deposits in southeastern New Mexico near Carlsbad. The higher grade (20 to 25 percent K_2O) commercial ore in this area is nearing depletion and most of the seven producing firms are estimated to have only a 6- to 10-year supply. U. S. production reached a peak output in 1966 and has since declined. Figure 3 shows the locations of the domestic deposits.

In the conventional shaft-type mining operations, large continuous mining machines are used in both the New Mexico and Canadian mines. Room-and-pillar mining methods are used in New Mexico with a first-run extraction of about 65 percent while in the deeper Canadian mines the first-run extraction is in the order of 35 percent. On the second pass in the New Mexico mines at least 55 percent of the remining potash is recovered by "pillar robbing" for a total extraction of about 83 percent of ore body. As much as 90 percent recovery has been claimed for some operations. Pillar robbing is not practiced in Canada and because of the greater mine depth, it is not likely to be with present technology.

Two basic methods of ore treatment, flotation and fractional crystallization, are used both in the Carlsbad area and in Canada to recover sylvite from the ore. In general, the crushed ore is mixed with a brine saturated with both sodium and potassium chlorides and deslimed to remove most of the clay impurities. The pulp is conditioned with an amine flotation reagent and sent to flotation cells where the sylvite is separated from the halite, the principal impurity. The halite fraction is repulped and pumped to tailings; the sylvite concentrate is dried, sized, and shipped or sent to storage.

Fractional crystallization is based on the specific difference in the solubility-temperature relationships of sodium chloride and potassium chloride in saturated solution. Crushed ore is mixed with hot, saturated sodium chloride brine, which selectively dissolves the potassium chloride. The brine is then cooled causing the potassium chloride to crystallize as a 99-percent-pure product.

Langbeinite, produced in the United States by IMC and Duval Corp., is separated from halite, its principal impurity, by the selective solution of the halite. The flotation process is also used to separate langbeinite from sylvite.

Potassium compounds are recovered from brines, including brines from solution mining, by evaporation and fractional crystallization. The sodium salts in Searles Lake brines are separated in triple-effect evaporators, leaving a hot liquor rich in potash and borax. Rapid cooling of the sodium-free solution under vacuum causes the potassium salts to crystallize. The crystals of potassium salts are then removed by settling and centrifuging.

About 84 percent of the domestic potash is produced in a 55-square mile area 15 miles east of Carlsbad, New Mexico. The population density of the area is extremely low and the semi-arid surface land is of little commercial value. There

are eight refineries in this district, each requiring large tailing disposal areas. Such operations in a heavily populated area would present serious problems since the tailings consist largely of sodium chloride salt; consequently, areas covered with this waste are incapable of supporting any facility life. The operation near Moab, Utah, is similarly located, but extreme care must be exercised to prevent pollution of the nearby Colorado River.

The brine operation in Utah requires large evaporating pans covering many acres of the land surface. The area is unpopulated so the large land area needed for concentrating the brine by solar evaporation presents no problem. The process involved here involves evaporation of Great Salt Lake waters first to recover common salt (NaCl) and then, by evaporation, to recover potassium sulfate. From the selective evaporation process, all residual brines, containing mostly magnesium and lithium salts are returned to the lake.

TRONA (SIC 1474)

Trona ($Na_2CO_3NaHCO_3 \cdot 2H_2O$) is the most common sodium carbonate mineral found in nature. It crystallizes when carbon dioxide gas is bubbled through solutions of sodium carbonate having a concentration greater than 9 percent. Carbonation of less concentrated solutions precipitates sodium bicarbonate. The largest known deposit of relatively pure trona in the United States was discovered in southwest Wyoming in 1938 while drilling for oil near Green River. The deposit is relatively free of chlorides and sulfates and contains 5 to 10 percent insoluble matter and constitutes the only mineable quantity of this material. It is also the world's largest natural source of sodium carbonate (soda ash).

Trona is a sedimentary deposit precipitated in the bottom of the ancient Eocene Lake Gosiute. Subsequent deposits of oil shale, siltstone and sandstone covered the trona and the beds that are mined are at 800 to 1500 feet below the surface. Approximately 25 different trona-bearing beds lie buried at depths of 440 to 3500 feet.

Trona ore mining is carried out near Green River, Wyoming by four corporations. Only three have soda ash refining facilities on site at the present time. The increasing industrial use of soda ash, together with the phasing out of obsolete and controversial synthetic soda ash facilities in the East has caused a great spurt of growth in the trona ore industry from the early 1960's. The mineable resources of trona in this area have been estimated to be 45 billion kkg (50 billion short tons).

SODIUM SULFATE

Natural sodium sulfate is derived from the brines of Searles Lake in California, certain underground brines in Texas, and dry lake brines in Wyoming. Sodium sulfate is also derived as a by-product from rayon production, which requires that caustic solutions used in processing cellulose fiber be neutralized with sulfuric acid. Other sources of by-product sodium sulfate include the chemical processes that produce hydrochloric acid, cellophane, boric acid, lithium carbonate, phenol, and formic acid.

The natural sodium sulfate is produced by six facilities in California, Utah, and Texas. Three facilities in California produce 74 percent of the natural product.

ROCK SALT (SIC 1476)

Sodium chloride, or salt, is the chief source of all forms of sodium. Salt is produced on a large scale from bedded and dome-type underground deposits and by evaporating lake and sea brines. Increasing quantities of two commercially important sodium compounds, sodium carbonate (soda ash) and sodium sulfate (salt cake), are produced from natural deposits of these compounds, although salt is still the main source of both.

Bedded salt deposits are formed when a body of sea water becomes isolated from the circulating ocean currents by a reef, sandbar, or other means, and under suitably dry and warm climatic conditions the evaporation proceeds until the salts are partially or entirely deposited. With continuous or periodic influx of sea water to replace evaporation, large deposits of salt have been built up (in some instances to several thousand feet in thickness). Deposits of this type have also been called lagoonal. During the Permian geologic age two famous salt deposits of the lagoonal type were laid down, one in northern Germany and the other in eastern New Mexico. A second large bedded deposit in the United States is the Silurian salt deposit, which underlies Michigan, New York, Pennsylvania, Ohio, and West Virginia. It was formed in much the same manner as the Permian beds by the evaporation of a large inland sea which became separated from the ocean and gradually evaporated.

Playa deposits are formed by leaching of surrounding sediments with water, which subsequently drains into a landlocked area and evaporates, leaving the salts. The composition of the brines and salt beds of these deposits generally does not resemble that of sea water; playa deposits of California and Nevada contain, in addition to

sodium chloride, sodium carbonate, sodium sulfate, potash and boron.

Salt domes are large vertical structures of salt, resulting from deformation of deeply buried salt beds under great pressure. The plastic nature of halite under high temperature and pressure and its low density, compared with that of the surrounding rock, permits deeply buried sedimentary deposits to be forced upward through zones of weakness in the overlying rocks, forming vertical columns or domes of salt extending several thousand feet in height and cross section. If the bedded deposit at the base of the dome is sufficiently large, the salt columns may rise to the surface. There are reportedly 300 salt domes in the gulf coast area from Alabama to Mexico.

Rock salt is mined on a large scale in Michigan, Texas, New York, Louisiana, Ohio, Utah, New Mexico, and Kansas, with room-and-pillar the principal mining method. Rooms vary in size depending on the thickness of the seam and other factors. Salt mining is similar to coal mining and is highly mechanized. In one mine an undercutter cuts a slot 10 feet deep at the base of the wall, which is then drilled and blasted. About 0.2 kg of dynamite per kkg of salt is required. The broken salt is transported by various mechanical means such as loaders, trucks, and belt conveyors to the underground crushing area. The salt may be processed through a number of crushing and screening stages prior to being hoisted to the surface where the final sizing and preparation for shipment or further use is carried out.

About 57 percent of the U.S. salt output is produced by introducing water into a cavity in the salt deposits and removing the brine. This procedure is relatively simple and has particular advantage when the salt is to be used as a brine as, for example, in chemical uses such as soda ash and caustic manufacture. Holes are drilled through the overburden into the deposit and cased with iron pipe. Water is introduced into the deposit through a smaller pipe inside the casing. A nearly saturated brine is formed in the cavity at the foot of the pipe. This brine is pumped or airlifted through the annular space between the pipes. Figure 6 shows the locations of current rock salt operations in the United States.

PHOSPHATE ROCK (SIC 1475)

"Phosphate rock" is a commercial term for a rock containing one or more of the phosphate minerals, usually calcium phosphate, of sufficient grade and suitable composition to permit its use, either directly or after concentration, in manufacturing commercial products. The term "phosphate

FIGURE 6
ROCK SALT MINES & WELLS

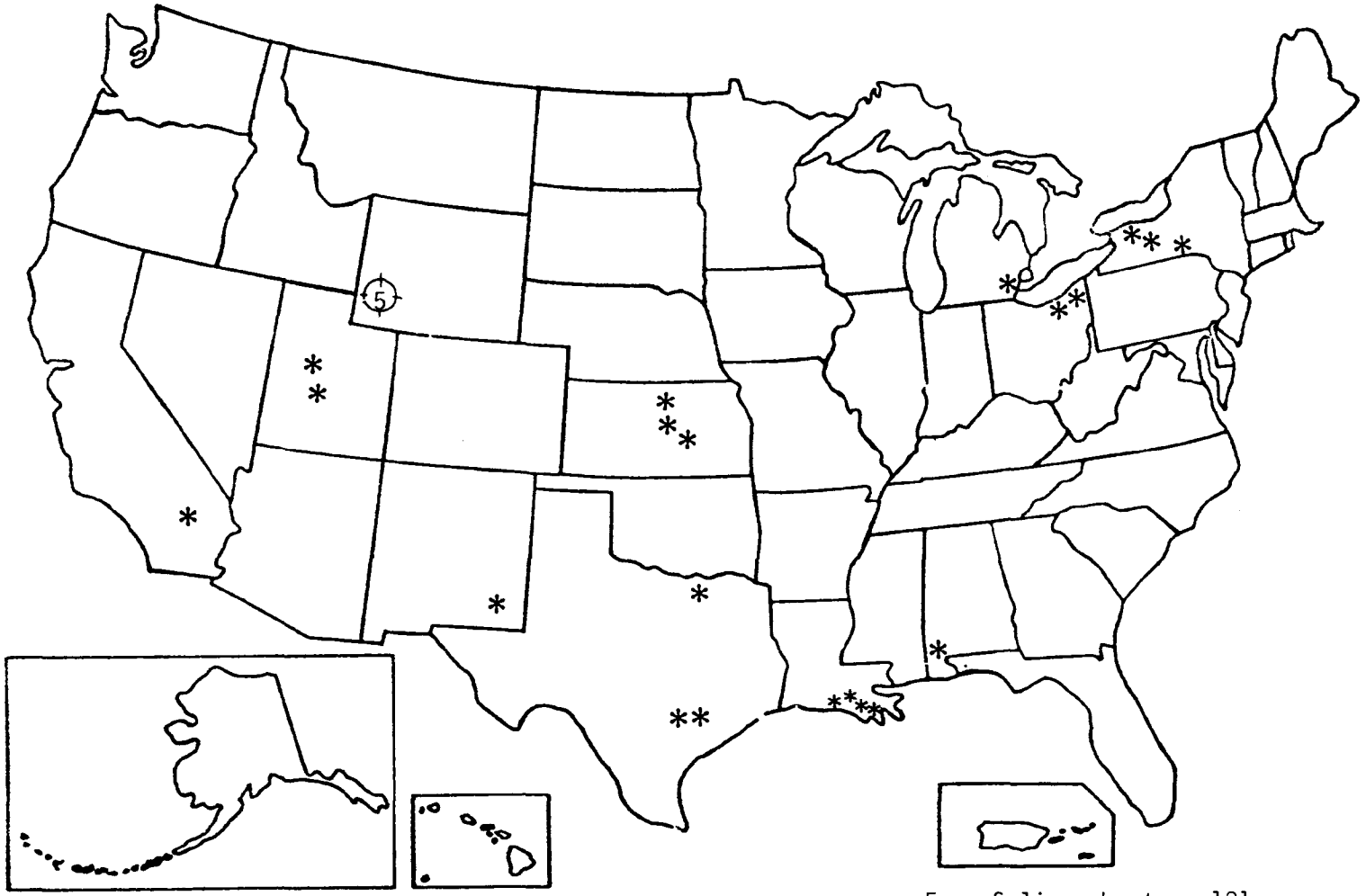

From Saline chart-pg.181
The National Atlas of The USA
USGS-1970

rock" includes phosphatized limestones, sandstones, shales, and igneous rocks which do not have a definite chemical composition. The major phosphorus minerals of most phosphate rock are in the apatite group and can be represented by the generalized formula $Ca_5(PO_4)_3$ - (F, Cl, OH). The (F, Cl, OH) radical may be all fluorine, chlorine, or hydroxyl ions or any combination thereof. The (PO_4) radical can be partly replaced by small quantities of VO_4, AsO_4, SiO_4, SO_4, and CO_3. Also, small quantities of calcium may be replaced by many elements such as magnesium, manganese, strontium, lead, sodium, uranium, cerium, and yttrium. The major impurities include iron as limonite, clay, aluminum, fluorine, and silica as quartz sand. Phosphate rock occurs as nodular phosphates, residual weathered phosphatic limestones, vein phosphates, and consolidated and unconsolidated phosphatic sediments. The best known of the apatite minerals, fluorapatite is widely distributed. Relatively small deposits of fluorapatite occur in many parts of the world. The domestic deposits that are currently being exploited are indicated in Figure 7.

Phosphate ore is mined by open pit methods in all four producing areas: Florida, North Carolina, Tennessee, and the Western States. In the Florida land-pebble deposits, the overburden is stripped and the ore mined by large electric dragline excavators equipped with buckets, with capacities up to 49 cubic yards. The ore is slurried and pumped to the washing facility, in some instances several miles from the mine. In the Tennessee field and the open pit mines in the western field, the ore is mined by smaller dragline excavators, scrapers or shovels and trucked to the facilities. In North Carolina a 72-cubic-yard dragline is used for stripping, and the ore is then hydraulically transported to the washer.

All of the North Carolina and nearly all Florida and Tennessee phosphate ore must be treated before utilization. Washing is accomplished by sizing screens, log washers, various types of classifiers, and mills to disintegrate the large clay balls. The fine slime, usually minus 150 mesh, is discarded. In the Florida land-pebble field, the plus 14 mesh material is dried amd marketed as high-grade rock or sometimes blended with the fine granular material (minus 14, plus 150 mesh) that has been treated in flotation cells, spirals, cones or tables. Losses in washing and flotation operations, which range from 40 percent of the phosphorus in the Florida operations to more than 50 percent in some Tennessee areas, occur in the form of slimes containing 4 to 6 percent solids. These slimes are discharged into settling ponds, where initial settling occurs, and substantial

FIGURE 7

PHOSPHATE MINING & PROCESSING LOCATIONS

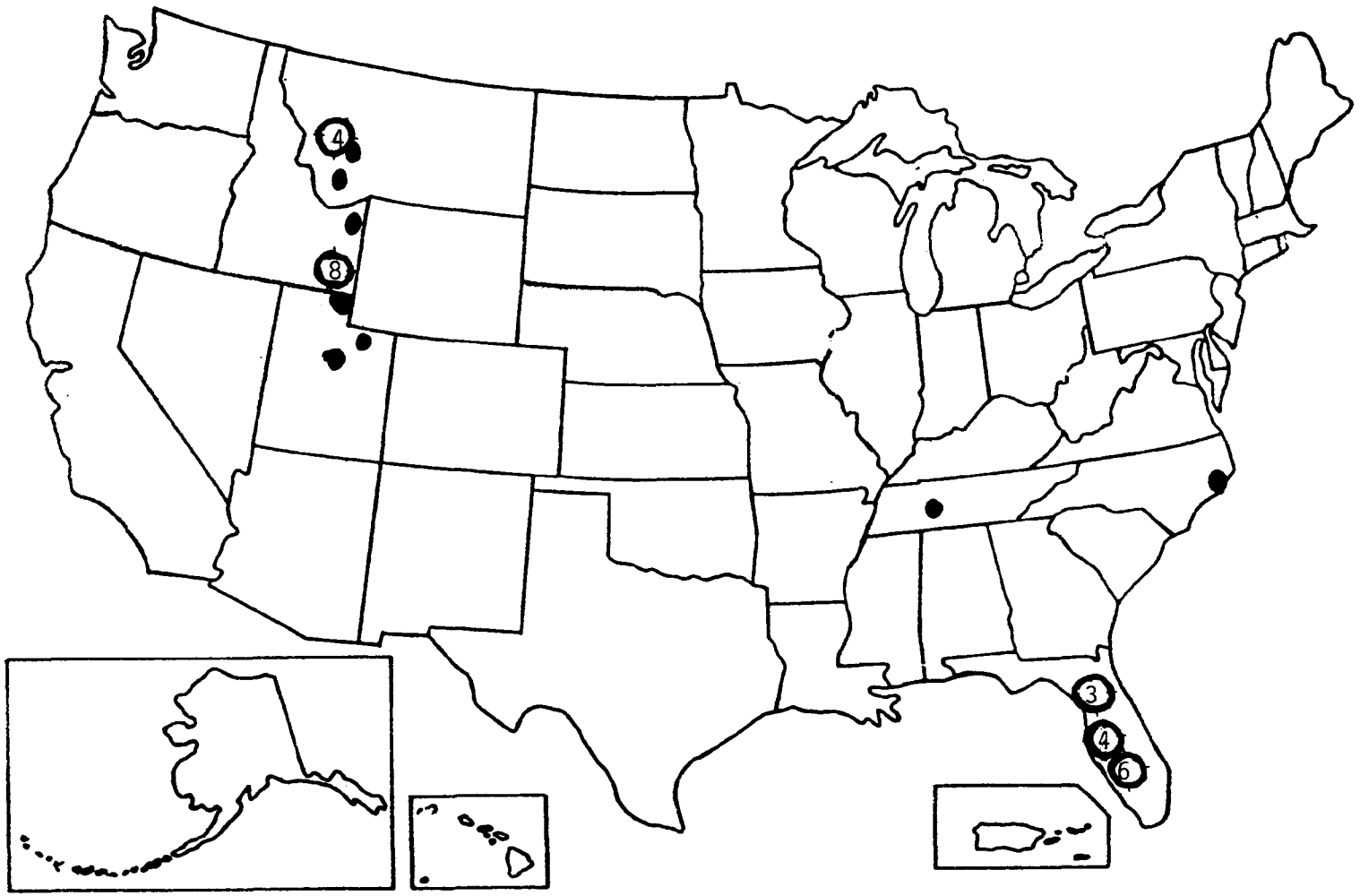

From Industrial and Chemical Minerals chart-pg.184.
The National Atlas of The USA
USGS-1970

quantities of relatively clear water is returned to the mining and washing operations.

Some of the western field phosphate rock production is of suitable grade as it comes from the mine. Siliceous phosphate ore and mixtures of phosphate rock and clay minerals are amenable to benefication, and in 1968 three companies in the western field were beneficiating part of their production. Two flotation facilities and several washing facilities were in operation in 1968.

Several environmental problems are associated with the phosphorus and phosphate industry. In the southeastern states mining and processing of phosphate rock is located close to developed and expanding urban areas. In the Florida land-pebble district the phosphate matrix (ore) underlies 1.2 to 18 meters (4 to 60 feet) of overburden consisting mostly of sand and clay requiring the use of large draglines to remove the overburden. The major mining companies, together and individually, have embarked upon a continuing program of reclamation of mined-out areas and are planning mining operations to provide easier and more economical methods of reclamation. Many thousands of acres of land have been reclaimed since the program started.

The Florida phosphate rock washing operations, because of the nature of the material, produces large quantities of a slurry of very fine clay and phosphate minerals called slimes. This is a waste product and must be contained in slime ponds that cover large areas since many years of settling are required before these pond areas can be reclaimed. Much research effort has been expended by both government and industry to solve this problem which is not only an environmental one but also one of conservation since about 33 percent of the phosphorus values are wasted. Some progress has been made and old slime ponds are now being reclaimed for recreational, agricultural, and other uses. The greatest problems of this nature exist in central Florida but similar situations prevail in northern Florida and Tennessee.

SULFUR (SIC 1477)

Elemental sulfur is found in many localities generally in solfataras and gypsum-type deposits. By far, most of the world's supply of sulfur comes from the gypsum-type deposits where it occurs as either crystalline or amorphous sulfur in sedimentary rocks in close association with gypsum and limestone. The origin of such deposits has been variously attributed to geochemical processes involving the reduction of calcium sulfate by carbon or methane followed by oxygenation of the resulting hydrogen sulfide; or to

biochemical processes involving the reduction of sulfate to sulfide by various microorganisms.

The major domestic sources of sulfur are associated with the Gulf Coast salt domes which characteristically are circular or oval in cross-section with the sulfur-bearing cap rock occurring at depths of less than 900 meters (3000 feet). The diameter of the domes may vary from 0.8 to 8 km (one-half to five miles) with a dry, compact, coarsely crystalline salt column below the cap rock. Most of the elemental sulfur is found in the limestone or carbonate zone of the cap rock with a horizon which may vary from nearly zero to several hundred meters in thickness having sulfur content which may range from traces to more than 40 percent.

The sulfur formations in West Texas are in porous zones of gently dipping dolomitic limestone, silty shale, anhydride and gypsum. The sulfur deposits are low grade and the layers that contain sulfur are thin. Depths of the sulfur deposits range from 200 to 460 m (700 to 1,500 feet). Surface exposures of sulfur in porous gypsum and anhydrite are distributed over a rectangular area about 64 km long and 48 km wide (40 miles long and 30 miles wide) in both Culberson and Reeves counties.

Mining of sulfur is accomplished by the Frasch or hot water process. In the Frasch process, the sulfur is melted underground by pumping hot water to the formation. The molten sulfur is then raised to the surface through the drill pipe and stored in liquid form in steam-heated tanks. In most installations, the liquid sulfur is pumped directly into heated and insulated ships or barges that can transport the sulfur in liquid form. Approximately 15 percent of the total sulfur produced in the U.S. is metered and pumped to storage vats for cooling and solidifying before it is sold in dry form.

Sulfur has widespread use in the manufacturing of fertilizers, paper, rubber, petroleum products, chemicals, plastics, steel, paints and other commodities, with the fertilizer industry consuming approximately 50 percent of the total U.S. sulfur production. The locations of the United States sulfur deposits is shown in Figure 8.

MINERAL PIGMENTS

The mineral pigments consist of three general groups:

(1) Those consisting mostly of iron oxides such as hematite and limonite.
(2) Those containing large amounts of clay or noncoloring matter, such as ocher, sienna, umber and colored shales.

FIGURE 8
SULFUR DEPOSITS

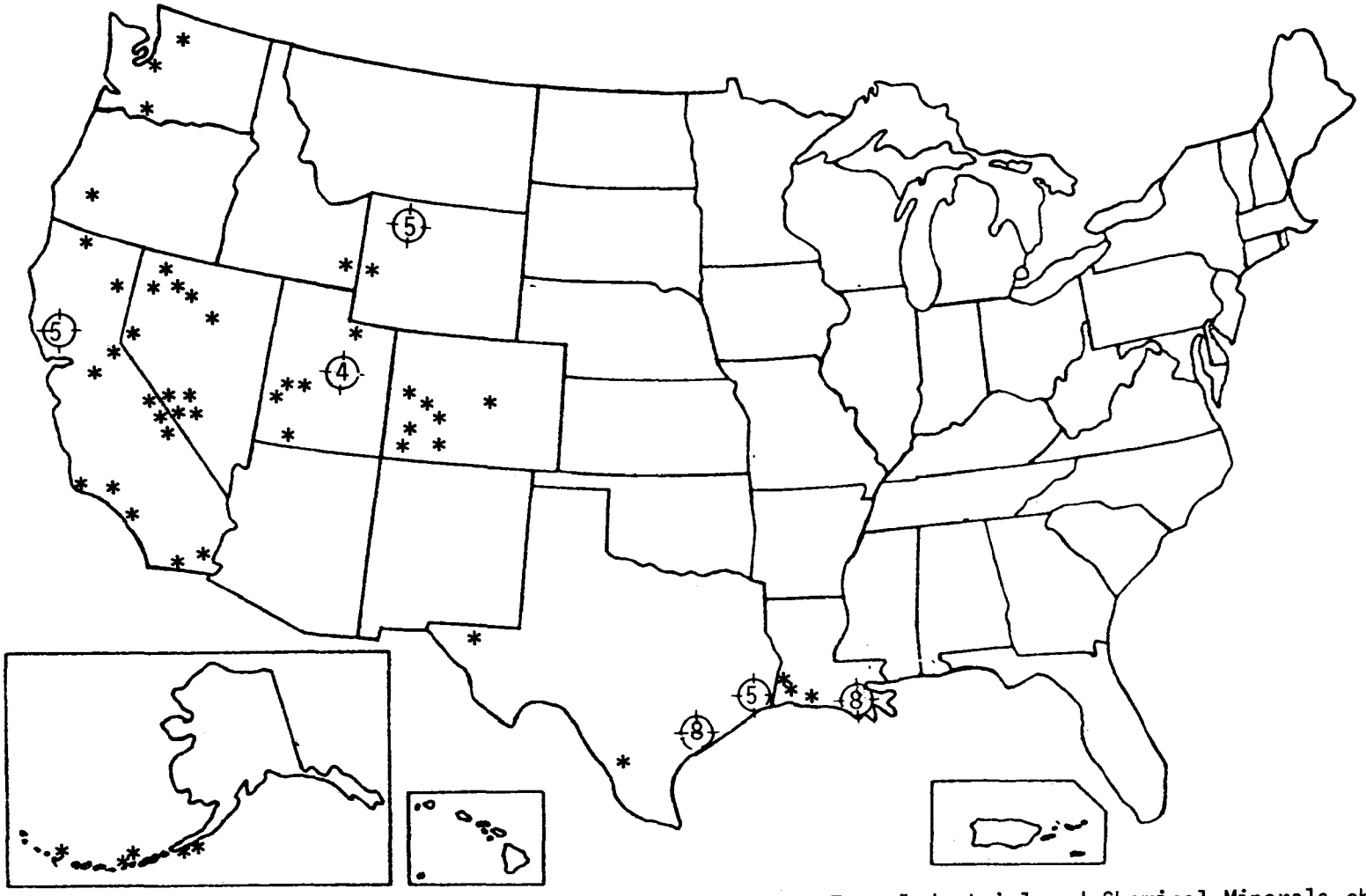

From Industrial and Chemical Minerals chart-
pg.184
The National Atlas of The USA
USGS-1970

(3) Those whose color is not due to iron oxide such as Vandyke brown, graphite and terre-verte.

Since the coloring power of the natural yellow, red, and brown mineral pigments is due principally to the content and condition of iron oxide, the occurrence of mineral pigments in many instances is closely allied to that of the iron ores. Pigment materials and iron ores often are mined in the same localities, and iron ores are used at times for mineral pigments of the red and brown varieties. The iron oxides are almost universally distributed.

Replacement or precipitation deposits are the principal sources of limonite and ocherous minerals. They have been deposited in cavities by ground waters charged with iron salts removed from the weathering of impure limestone, sandstones, and shales, especially when pyrite was an accessory mineral. The most important deposits are found usually in the fractured and faulted zones of rocks of all ages, including the Cambrian quartzites of Georgia, the Paleozoic limestones and quartzites of Pennsylvania, and the unconsolidated Tertiary clays, sands, manganese ores, and lignites of Vermont.

In Virginia, deposits of residual limonite occur in two belts, one extending along the west slope of the Blue Ridge from Warren to Roanoke County and the other along the east side of the New River-Cripple Creek district, Pulaski County, and near the boundary of Wythe and Carroll Counties. The latter deposits are associated with Cambrian quartzites. The deposits in Pulaski County have produced ochers of high iron content somewhat similar in analyses and properties to the Georgia ocher.

The chief production of earth pigments in the United States in recent years has come from Pennsylvania, Virginia, Illinois, Minnesota, Georgia, California, and New York.

In Pennsylvania, ocher is mined both by opencut methods and shafts, and in Georgia by opencut methods. In most deposits the pockety character of the ore and the uncertain market for the product do not justify elaborate equipment.

The soft, claylike pigments are treated by comparatively simple washing processes, followed by dehydration and pulverization. Log washers and blungers are used for dispersion; trough, cone, and bowl classifiers separate the sand from the fine suspension. A portion of the water is removed in settling tanks and the remainder is extracted by filter presses and rotary driers. Hammer type pulverizers reduce the pigment to powder for packing and shipment and a

final air separation may be interposed for the better grades.

LITHIUM MINERALS (SIC 1479)

Spodumene, petalite, lepidolite, and amblygonite are the minerals from which lithium is derived. Brines are another source of lithium. Domestic spodumene is recovered by mechanical mining and milling processes, and either an acid or an alkali method is used to extract lithium compounds from the spodumene ore.

Lithium minerals have been mined from pegmatite depostis by open pit and underground methods. Other minerals such as beryl, columbite, feldspar, mica, pollucite, quartz, and tantalite are often extracted and recovered as coproducts in the mining process.

In North Carolina spodumene is recovered from the pegmatite ore by crushing, screening, grinding, and flotation, and lithium compounds are recovered from spodumene concentrates by an acid or an alkali treatment. In the method employing acid, spodumene is changed from the alpha form to the beta form by calcining at 982°C (1,800°F). Next it is added to sulfuric acid and the mixture is heated until lithium sulfate is formed. The sulfate is then leached from the mass, neutralized with limestone, and filtered. Soda ash is added to the sulfate solution in order to precipitate lithium carbonate from which most of the other compound forms are prepared. In the alkali treatment, spodumene is stage-calcined with powdered limestone and hydrolyzed with steam to produce a water-soluble lithium oxide. This can be easily recovered and converted to the desired lithium compound.

Certain natural brines are also a source of lithium. At Searles Lake, California, brine (0.033 percent lithium chloride) is first concentrated in evaporators causing several salts to precipitate, including dilithium sodium phosphate, sodium chloride, and a mixture of other sodium salts. Through a combined leach-flotation process the lithium compound is recovered as crystals and then fed to a chemical facility to be converted to lithium carbonate. The brines at Silver Peak, Nevada (0.244 percent LiCl) are concentrated to a LiCl content of 6 percent by solar evaporation. This concentrate is then pumped to a nearby mill where a soda ash process changes the chloride to solid lithium carbonate. Lithium metal is produced by the electrolysis of lithium chloride. Figure 5 shows the domestic lithium deposits.

SECTION IV

INDUSTRY CATEGORIZATION

INTRODUCTION

In the development of effluent limitations guidelines and recommended standards of performance for new sources in a particular industry, consideration should be given to whether the industry can be treated as a whole in the establishment of uniform and equitable guidelines for the entire industry or whether there are sufficient differences within the industry to justify its division into categories. For this segment of the mineral mining and processing industry, which includes twelve mineral types, the following factors were considered as possible justifications for industry categorization and subcategorization:

(1) manufacturing processes;

(2) raw materials;

(3) pollutants in effluent waste waters;

(4) product purity;

(5) water use volume;

(6) facility size;

(7) facility age; and

(8) facility location.

INDUSTRY CATEGORIZATION

The first categorization step was to segment the mineral mining and processing industry according to product use. Thus, Volume I is "Mining of Minerals for the Construction Industry," this volume, Volume II, is "Mining of Minerals for the Chemical and Fertilizer Industries," and Volume III is "Mining of Clay, Ceramic, Refractory and Miscellaneous Minerals."

The reason for this division is twofold. First the industries in each volume generally have the same waste water treatment problems. Secondly, this division results in development documents that are not so big that the reader

may easily forget earlier points as he reads from section to section.

The first cut in subcategorization was made on a commodity basis. This was necessary because of the large number of commodities and in order to avoid insufficient study of any one area. Furthermore, the economics of each commodity differs and an individual assessment is necessary to insure that the economic impact is not a limiting factor in establishing effluent treatment technologies. Table 4 lists the 18 subcategories in this report.

FACTORS CONSIDERED

Manufacturing Processes

Each commodity can be further divided into three very general classes - dry crushing and grinding, wet crushing and grinding (shaping), and crushing and beneficiation (including flotation, heavy media, et al) where such differences exist. Each of these processes is described in detail in Section V of this report, including process flow diagrams pertinent to the specific facilities using the process.

Raw Materials

The raw materials used are principally ores, which vary across this segment of the industry and also vary within a given deposit. Despite these variations, differences in ore grades do not generally affect the ability to achieve the effluent limitations. In cases where it does, different processes are used, as is the case for fluorspar, and subcategorization is better applied by process type as described in the preceding paragraph.

Product Purity

The mineral extraction processes covered in this report yield products which vary in purity from what would be considered a chemical technical grade to an essentially analytical reagent quality. Pure product manufacture usually generates more waste than the production of lower grades of material, and thus could be a basis for subcategorization. As is the case for variation of ore grade discussed under raw materials, pure products usually result from different beneficiation processes, and subcategorization is applied more advantageously there.

TABLE 4

Industry Categorization

Commodity	SIC Code	Subcategory
Barite	1472 and 3295	Dry Wet Flotation
Fluorspar	1473 and 3295	Heavy Media Separation Flotation Drying and Pelletizing
Salines from Brine Lakes	various	No further subcategorization
Borax	1474	No further subcategorization
Potash	1474	No further subcategorization
Trona	1474	No further subcategorization
Sodium Sulfate	1474	No further subcategorization
Rock Salt	1476	No further subcategorization
Phosphate Rock	1475	Flotation units Non-flotation units
Sulfur (Frasch)	1477	Anhydrite On-shore
Mineral Pigments	1479	No further subcategorization
Lithium Minerals	1479	No further subcategorization

Facility Size

For this segment of the industry, information was obtained from more than 95 different mineral mining sites. Capacity varied from as little as one kkg/day to 12,500 kkg/day. The variance of this factor was so great that facility size was not felt to be useful in categorizing this segment of the industry. Furthermore, setting standards based on kg pollutant/kkg production minimizes the differences in facility sizes. The economic impact on plant size will be addressed in another study.

Facility Age

The newest facility studied was less than a year old and the oldest was 88 years old. There is no correlation between facility age and the ability to treat process waste water to acceptable levels of pollutants. Also, the equipment in the oldest facilities either operates on the same principle or is identical to equipment used in modern facilities. Therefore, facility age was not an acceptable criterion for categorization.

Facility Location

The locations of the more than 95 mineral mining and processing sites studied are in nineteen states spread from coast to coast and north to south. Some facilities are located in arid regions of the country, allowing the use of evaporation ponds and surface disposal on the facility site. Other facilities are located near raw material mineral deposits which are highly localized in certain areas of the country. In these instances, geographical location was felt to be a legitimate criterion for industry subcategorization. Thus, facility location was used for further segmentation within a category, but not for categorization.

SECTION V

WATER USE AND WASTE CHARACTERIZATION

INTRODUCTION

This section discusses the specific water uses in the minerals for the chemical and fertilizer industries segment of the mineral mining and processing industry, and the amounts of process waste materials contained in these waters. The process wastes are characterized as raw waste loads emanating from specific processes in the extraction of the materials involved in this study and are generally given either in terms of kg/kkg of product produced or ore processed lb/1000 lb). The specific water uses and amounts are generally given in terms of l/kkg of product produced or ore mined (gal/ton) for each of the facilities contacted in this study. Where appropriate, the water uses and raw waste loads are given in either l/day (gal/day) or concentration, mg/l, respectively. The treatments used by the mining and processing facilities studied are specifically described and the amount and type of waterborne waste effluent after treatment is characterized.

The verification sampling data measured at specific facilities for each subcategory is included in this report where industry data and data from other sources is lacking.

SPECIFIC WATER USES

Waste water originates in the mineral mining and processing industry from the following sources:

(1) Non-contact cooling water
(2) Process generated waste water - wash water
transport water
scrubber water
process and product consumed water
miscellaneous water
(3) Auxiliary processes water
(4) Storm and ground water - mine water
storm water

Non-contact cooling water is defined as that cooling water which <u>does</u> <u>not</u> come into direct contact with any raw material, intermediate product, by-product or product used in or resulting from the process. Such water will be regulated by general limitations applicable to all industries.

Process generated waste water is defined as that water which, in the mineral processing operations such as crushing, washing and beneficiation, comes into direct contact with any raw material, intermediate product, by-product or product used in or resulting from the process.

Auxiliary processes water is defined as that used for processes necessary for the manufacture of a product but not contacting the process materials, for example influent water treatment. Such water will be regulated by general limitations applicable to all industries.

The quantity of water usage for facilities in the minerals for the chemical and fertilizer industries segment of the mineral mining and processing industry ranges from 0 to 726,400,000 l/day (0 to 191,900,000 gal/day). In general, the facilities using very large quantities of water use it for heavy media separation and flotation processes in some cases, wet scrubbing and non-contact cooling, and specifically, in sulfur mining, as the process medium.

Non-Contact Cooling Water

The largest use of non-contact cooling water in this segment of the mineral mining industry is for the cooling of equipment, such as kilns, pumps and air compressors.

Contact Cooling Water

Insignificant quantities of contact cooling water are used in this segment of the mineral mining industry. When used, it usually either evaporates immediately or remains with the product.

Wash Water

This water also comes under the heading of process water because it comes into direct contact with either the raw material, reactants or products. Examples of this type of water usage are ore washing to remove fines and filter cake washing. Waste effluents can arise from these washing sources, due to the fact that the resultant solution or suspension may contain impurities or may be too dilute a solution to reuse or recover.

Transport Water

Water is widely used in the mineral mining industry to transport ore to and between various process steps. Water is used to move crude ore from mine to facility, from crushers to grinding mills and to transport tailings to final retention ponds. Transport water is process water.

Scrubber Water

Particularly in the dry processing of many of the minerals in this industry, wet scrubbers are used for air pollution control. These scrubbers are primarily used on dryers, grinding mills, screens, conveyors and packaging equipment. Scrubber water is process water.

Process and Product Consumed Water

Process water is primarily used in this industry during blunging, pug milling, wet screening, log washing, sulfur extraction, heavy media separation and flotation unit processes. The largest volume of water is used in the latter three processes. Product consumed water is often evaporated or shipped with the product as a slurry or wet filter cake.

Miscellaneous Water

These water uses vary widely among the facilities with general usage for floor washing and cleanup, safety showers and eye wash stations and sanitary uses. The resultant streams are either not contaminated or only slightly contaminated with wastes. The general practice is to discharge such streams without treatment or combine with process water prior to treatment.

Another miscellaneous water use in this industry involves the use of sprays to control dust at crushers, conveyor transfer points, discharge chutes and stockpiles. This water is usually low volume and is either evaporated or absorbed in the ore. The water uses so described are process waters.

Auxiliary Processes Water

Auxiliary processes water include blowdowns from cooling towers, boilers and water treatment. The volume of water used for these purposes in this industry is minimal. However, when they are present, they usually are highly concentrated in waste materials.

Storm and Ground Water

Water will enter the mine area from three natural sources, direct precipitation, storm runoff and ground water intrusion. Water contacting the exposed ore or disturbed overburden will be contaminated. Storm water and runoff can also become contaminated at the processing site from storage piles, process equipment and dusts that are emitted during processing.

PROCESS WASTE CHARACTERIZATION

The mineral products are generally discussed in SIC Code numerical sequence in this section. For each mineral product the following information is given:

- -- a short description of the processes at the facilities studied and pertinent flow diagrams;
- -- raw waste load data per unit weight of product or raw material processed;
- -- water consumption data per unit weight of product or raw material processed;
- -- specific facility waste effluents found and the post-process treatments used to produce them.

BARITE (SIC 1472)

There are twenty-seven significant U.S. facilities producing either barite ore or ground barite. Nine of these facilities are dry grinding operations, producing different grades of ground barite, fourteen use log washing and jigging methods to prepare the ore for grinding and four are wet flotation facilities using froth flotation techniques for the beneficiation of the washed and/or jigged ore.

BARITE (DRY PROCESS)

Process Description

Methods used in grinding barite depends upon the nature and condition of the product to be ground and upon the application for which the product is to be sold. In a dry grinding mill, the ore from facility stockpiles is batched in ore bins. In most facilities the ore is soft and crushing is not necessary prior to the milling operation. In these facilities, the ore is fed via a conveyor belt to the mill for processing. In some other facilities, the ore is hard and must be crushed before grinding to free barite from the gangue material. After milling, the ground product passes through a cyclone and vibrating screen before being pumped into the product silos. The product is reclaimed from these silos, and either pumped to bulk hopper cars or to the bagging facility. A generalized flow diagram for dry processing of barite is given in Figure 9.

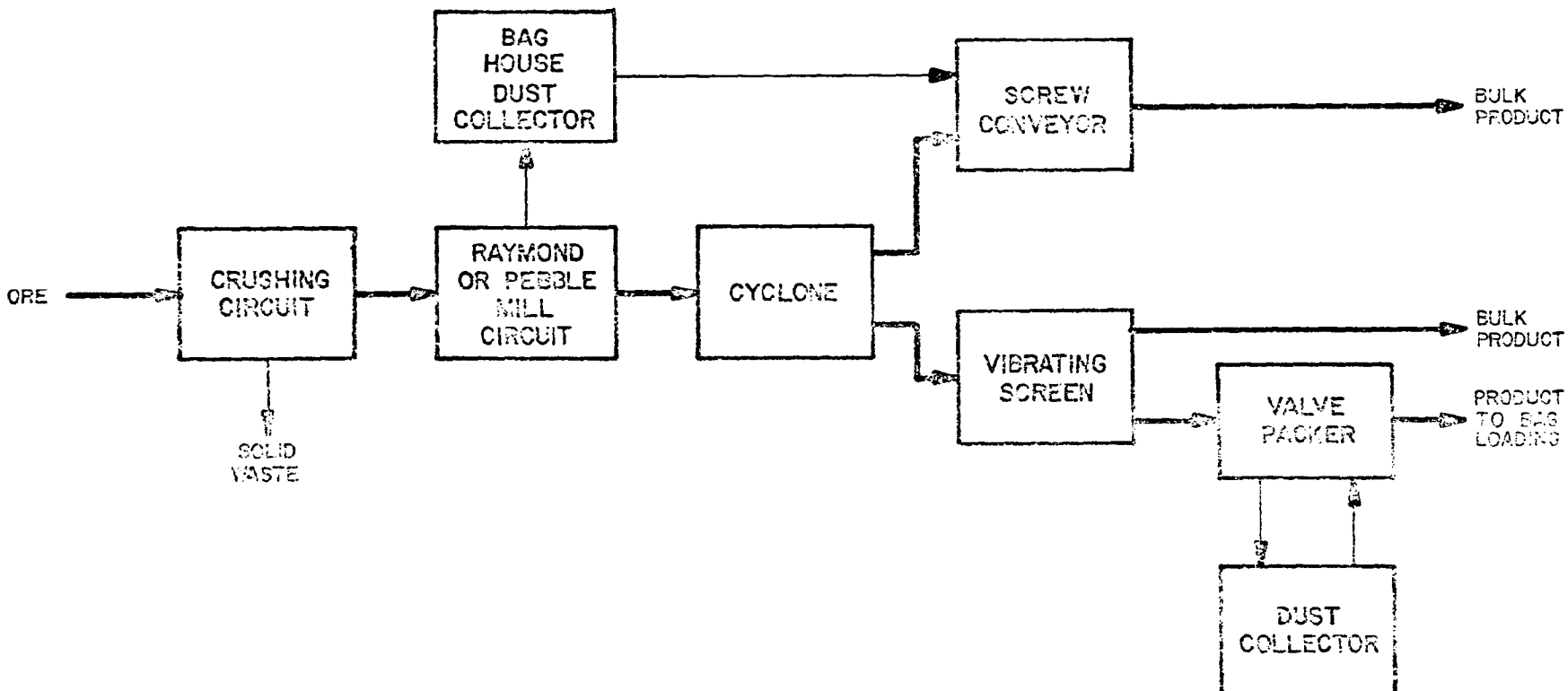

FIGURE 9.
BARITE MINING AND PROCESSING
(DRY GRINDING PROCESS)

Raw Waste Loads

The only waste is dust from baghouse collectors which is handled as a dry solid.

Water Use

No water is used in dry grinding facilities. There is no pumping of mine water in this subcategory.

Waste Water Treatment

None required.

Effluent

None.

BARITE - WET PROCESS (LOG WASHING AND JIGGING OPERATIONS)

Process Description

The wet processing facilities use washers or jigs to remove the clay from the barite ore. The mined ore is soft and is passed through a breaker and then fed to the washing circuit. Washing the barite laden earth is accomplished in the log washer. The washed ore is next screened in a trommel circuit, dewatered and then jigged to separate gravel from the barite product.

In facility 2013, the ore is first processed in a trommel screen to separate the fines (-3/4" material). The +1 1/2" material is then crushed and the resulting -4" barite product is sent to the stockpile. The +3/4 to 1 1/2" material is processed in a jig facility to separate gravel from the barite product. A generalized flow diagram for wet processing is given in Figure 10.

In all these facilities, barite is mined in dry open pits. In most facilities, the clay strata is excavated by power shovel or dragline and hauled to the washing facility by dump trucks. In facility 2013, the barite and the waste (chert) is separated in the pit by a dozer, the ore is then dried in place, and the fines are separated by means of a trommel. Several caterpillar dozers with rippers are used for ripping, then pushing the ore into piles to be loaded and hauled to the crusher at the processing facility.

The quantity of the clay, sand and gravel, and rock in the ores mined in these facilities varies from location to location. The pure barite amounts to 3-7 percent by weight

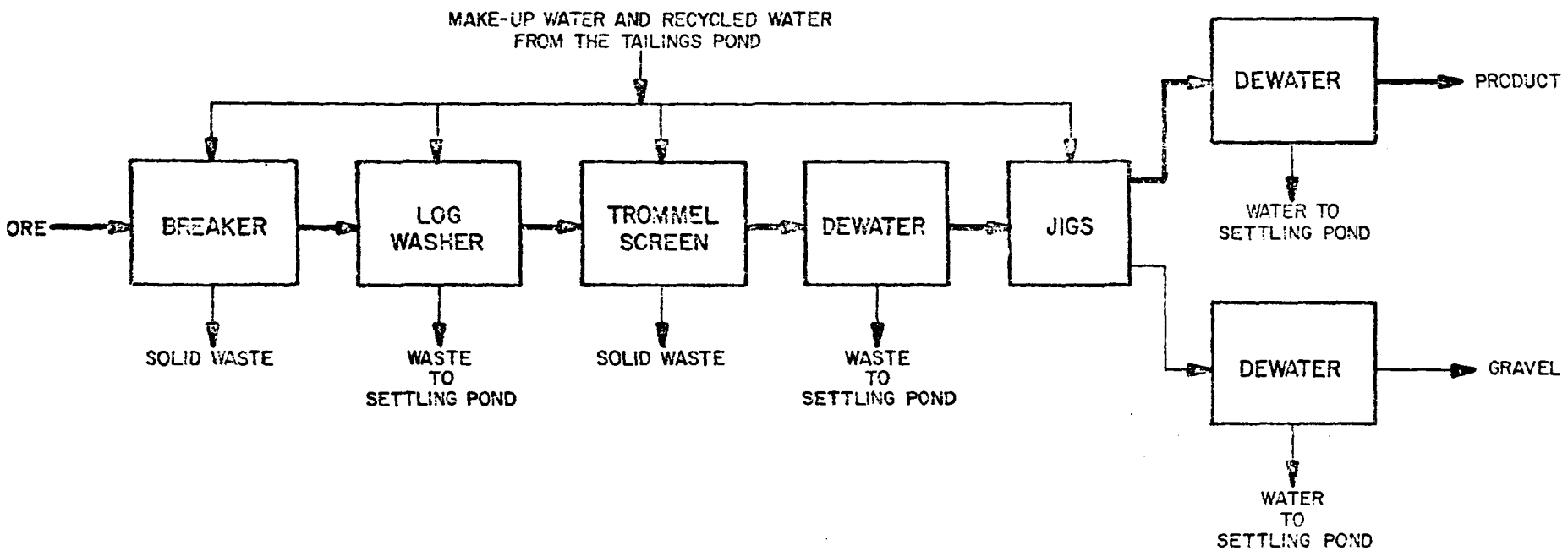

FIGURE 10
BARITE MINING AND PROCESSING
(WET PROCESS)

of the material mined for most facilities. Some waste material is removed at the mine site without use of water.

Raw Waste Loads

The process raw wastes in this subcategory consist of the mill tailings from the washing and jigging circuits. The range of the raw wastes is given as follows:

Waste	kg/kkg of feed
Clays and sands	230 - 970

Water Use

The quantity of the water used in these facilities depends upon the quality of the ore and the type of the waste material associated with the ore as given as follows:

Facility	barite recovery from feed (%)	water consumption in l/kkg of product (gal/ton) process water	sanitary and misc. usage
2011	63	62,600 (15,000)	650 (150)
2012	63	140,200 (33,600)	---
2013	77	7,200 (1,725)	---
2015	5.7	162,700 (39,000)	---
2016	4.8	239,400 (57,400)	---
2017	3.3	291,300 (69,800)	12,380 (3,270)
2018	3.9	246,500 (59,100)	8,382 (2,215)
2020	54	62,600 (15,000)	650 (150)
2046	63	140,200 (33,600)	---

The exceptional facility in the above table is 2013. This facility uses water at an average of only 7,200 l/kkg product (1,725 gal/ton) because only 30-40 percent of the ore goes through jigging. The majority of the barite at this facility is dry ground.

In facilities 2012, 2013 and 2046, the process water volumes given include the water used for sanitary purposes. In all facilities, the process water is recycled. Makeup water may be required in some of these facilities.

Waste Water Treatment

The waste water streams are combined and sent to settling ponds and the reclaimed water from the ponds is recycled to the washing facilities. At facilities 2012 and 2046, the overflow from the settling pond percolates through gravel piles amassed around the settling pond, and enters

clarification ponds. The supernatant water from the clarification pond is then recycled to the facilities for reuse. Also, in these facilities (2012 and 2046), there are several small ponds created around the main impoundment area to catch any accidental overflow from the clarification ponds. Besides ponding, facilities 2015 and 2016 also use coagulation and flocculation to treat their process waste water. A summary of the treatment systems for the barite facilities in this subcategory follows:

Facility	Discharge	Source	Treatment
2011	Intermittent*	Mill tailings, runoff	Pond recycle, 18 ha (45 ac)
2012	Intermittent* from clear water pond	Well water	Pond 8 ha (20 ac)
	None from tailings pond	Mill tailings	Pond, 36 ha (90 ac) Clarification Pond, recycle
2013	None	Mill tailings	Pond, recycle
2015	Intermittent*	Mill tailings, runoff	Pond, coagulation Flocculation, recycle
2016	Intermittent*	Mill tailings, runoff	Pond, coagulation Flocculation, recycle
2017	Intermittent*	Mill tailings, runoff	Pond, recycle
2018	Intermittent*	Mill tailings, runoff	Pond, recycle Pond 24 ha (60 ac)
2020	Intermittent* from clear water pond	Well water	
	None from settling pond	Mill tailings	Pond, 2 ha (6 ac)
2046	Intermittent* from clear pond	Well water	Pond, 12 ha (30 ac) clarification
	None from tailings pond	Mill tailings	Pond, recycle
2112	None	Slime Pond	Pond recycle

*Indicates overflow due to heavy rainfall.

Effluent

In normal circumstances, there is no effluent discharge from any of these facilities. During heavy rains six facilities (2011, 2015, 2016, 2017, 2018 and 2020), have an overflow from the impoundment area. Facilities 2012 and 2046 have no overflow from their tailings impoundment area. However, during heavy rainfall, they do have overflow from clear water ponds. Due to its geographical location, facility 2013 has no pond overflow. The amounts of these intermittent discharges are not known.

Data concerning tailings pond effluent after heavy rainfall was obtained from one facility. The significant constituents in this effluent are reported as follows:

Facility	2011 Daily Avg.	- Max.
pH	6.0	- 8.0
TSS, mg/l	15	32
Total barium, mg/l	0.1	- 0.5
Iron, mg/l	0.04	- 0.09
Lead, mg/l	0.03	- 0.10

BARITE (FLOTATION PROCESS)

Process Description

Processing in these facilities consists of crushing the ore to free it from the gangue material, washing the barite ore to remove the clay, jigging the washed ore to separate the gravel, grinding and beneficiation by froth flotation to recover barite concentrates. The concentrates are then filtered and dried. Drying at these facilities is conducted at temperatures high enough to destroy the organic reagent used in the flotation. The dried product is then cooled and bagged for shipment.

At facility 2019, two separate flotation circuits are used to recover barite fines from the log washer and jig tailings. In facility 2014, the ore from the mine is free from clays and sands, and this facility processes its ore without a washing and jigging operation. A generalized flow diagram for this subcategory is given in Figure 11.

Raw Waste Loads

The major process raw waste emanating from these facilities is the flotation mill tailings. The disposition and the quantities of the wastes are given as follows:

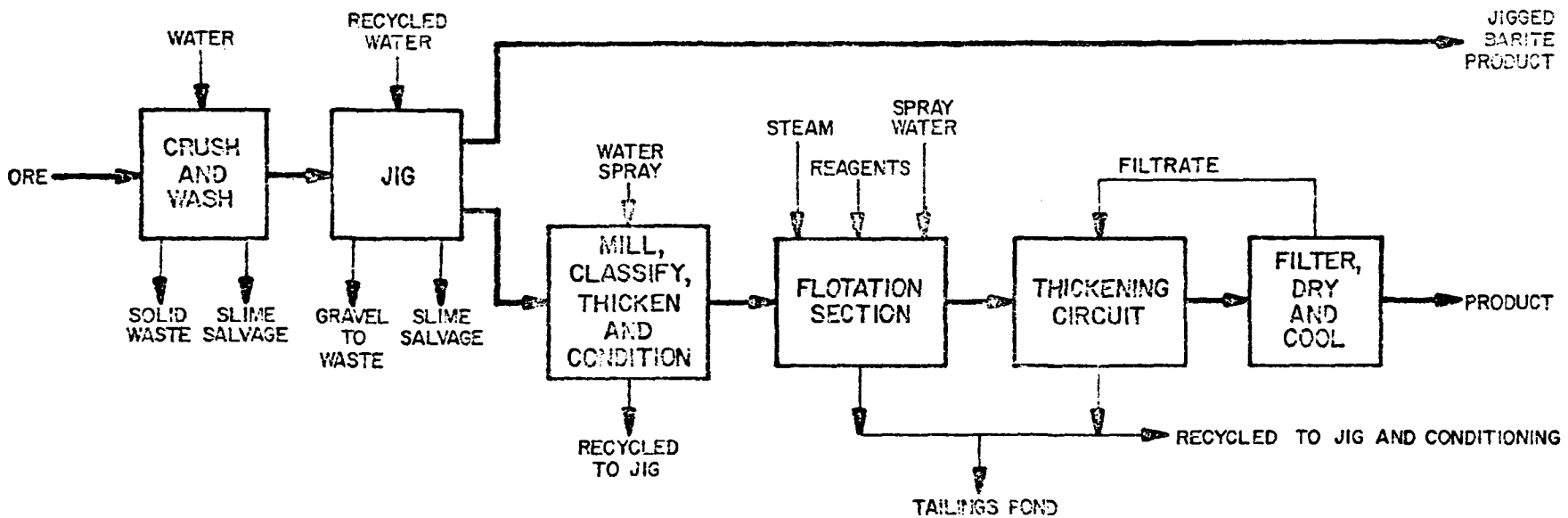

FIGURE 11
BARITE MINING AND PROCESSING
(FLOTATION PROCESS)

Facility	l/day (gal/day) 2010	2014	2019
Mill tailings	530,000 (140,000)	660,000 (173,500)	4,730,000 (1,250,000)
Washdown water from mill	265,000 (70,000)	110,000 (29,000)	--- unknown
Spent brine from water softening operation	---	19,000 (5,000)	---

The solids in the raw waste stream was reported to be an average of 24,750 mg/l and maximum of 50,000 mg/l for facility 2019.

Water Use

Facility 2010 consumes water at an average of 45,000 l/kkg product (10,800 gal/ton) on a total recycle basis. This includes about 1,655 l/kkg product used for non-contact cooling, as boiler feed and for sanitary purposes. Most of the process water used in this facility, 13,025,000 l/day (3.44 mgd), is recycled back to the facility from the thickening operations.

At facility 2014, well water is used both in the flotation circuit and for the milling operation. This facility consumes 2,500 l/kkg of product (595 gal/ton). Approximately 35 percent of this water is recycled from the thickening operations. The flotation tailings and some overflow from the thickener are sent to the tailings pond.

At facility 2019 untreated river water is used as process water. This facility consumes an average of 33,700 l/kkg of product (8,900 gal/ton) on a once through basis.

The hydraulic load of these facilities are given as follows:

Facility	l/day (gal/day) 2010	2014	2019
Makeup water	2,725,000 max. (720,000 max.)	792,000 (208,980)	4,731,000 (1,250,000)
Recycled water	13,025,000 (3,440,000)	427,000 (112,520)	---
Process consumed	15,750,000 (4,160,000)	872,000 (230,000)	4,731,000 (1,250,000)
Non-contact cooling	530,000 (140,000)	---	---
Sanitary	37,900 (10,000)	218,000 (57,500)	---
Boiler feed	37,900 (10,000)	---	---
Brine & back flush &rinse water used in water softening	---	19,000 (5,000)	---
Misc. housekeeping	---	110,000 (29,000)	---

Waste Water Treatment

Wastewater is treated by clarification and either recycled or discharged. A summary of the treatment systems is given as follows:

Facility	Discharge	Source	Treatment
2010	Intermittent [1]	Mill tailings	Pond, recycle
	Intermittent	Runoff, spills, washdown water	Pond
2014	None	Mill tailings	Pond, evaporation and seepage
	None	Washdown water	Pond, evaporation and seepage
2019	Intermittent [2]	Mill tailings	Pond

[1] Indicates overflow due to heavy rainfall
[2] Overflow by facility to maintain pond level

Facility 2010 has two ponds with a total capacity of 16 hectares (40 acres) to handle the process waste water. The flotation tailings are pumped into one of the ponds and the clear water is pumped to the other pond. The mill

tailings are in closed circuit, with occasional overflow from the tailings pond. This overflow depends upon the amount of surface water runoff from rainfall and the amount of evaporation from this pond. The overflow varies from 0 to 760 l/min (0 to 200 gpm). At times, there is no overflow from this pond for a year or more. The clear water pond catches the surface runoff water, some spills from the thickener overflows, water from use of hoses, clear water used in the laboratory, etc. This pond has also an intermittent discharge varying from 0 to 380 l/min (0-100 gpm).

At facility 2014, there are no effluent discharges from the property. The mill tailings and the spent brine from the water softening system are pumped into the tailings settling pond and the washdown of the floors is pumped to a separate pond. These ponds eventually dry by evaporation and seepage. This facility has no problem in terms of pond overflow due to its geographical location.

At facility 2019, process waste water is collected into a large pipe which crosses under the nearby river into a 40 hectare (100 acre) pond. The pond water pH is maintained at about 7.2 by application of lime. An overflow is necessary from this pond to maintain a constant pond elevation. The discharge from this pond is intermittent. Of the 4,731,000 l/day (1.25 mgd) input to the pond, there is an estimated 3,785,000 l/day (1.0 mgd) percolation through the pond berm. The pond berm is built primarily of river bottom sands. On a regular discharge basis (9 hours a day and 4 1/2 days per week operation), the effluent discharge from this facility would be 946,000 l/day (250,000 gal/day). This pond is seven years old and has an estimated life cycle of eighteen years. When overflow to the river is desired, lime and ferric chloride are used to decrease suspended solids.

Effluent Composition

Facility 2014 has no discharge. Facility 2019 has an intermittent discharge in order to maintain a constant pond elevation. The pond has yet to completely fill because of seepage. Detailed information on this effluent is not known. However, it has been reported that the average TSS concentration in this effluent is 250 mg/l.

Facility 2010 has an occasional discharge both from the tailings pond and the clear water pond during heavy rainfalls. The significant constituents in these effluent streams are as follows:

Waste Material	Tailings Pond Daily Average Max. Conc. (mg/l)	Amount kg/day	(lb/day)	Clear Water Pond Daily Average Max. Conc. (mg/l)
TSS	3-5	1.8	(3.5)	3-6
TDS	800-1271	467	(934)	1000-1815
Ammonia	<0.1-0.1	<0.5	(1)	5-35
Cadmium	0.004-0.008	<0.5	(1)	--
Chromium	0.200-0.400	<0.5	(1)	0.100-0.120
Iron, total	0.030-0.060	<0.5	(1)	0.030-0.070
Lead, total	0.020-0.080	<0.5	(1)	0.040-0.090
Manganese, total	0.002-0.008	<0.5	(1)	0.004-0.008
Nickel, total	0.030-0.070	<0.5	(1)	0.030-0.070
Zinc, total	0.005-0.010	<0.5	(1)	0.030-0.090

Mine Water Discharge

There is one underground mine in this category at facility 2010. The other mining operations are in dry open pits.

The underground mine workings intercept numerous ground water sources. The water from this mine is directed through ditches and culverts to sumps in the mine. The sumps serve as sedimentation vessels and suction for centrifugal pumps which discharge this water to the upper level sump. This mine water is neutralized with lime (CaO) for pH adjustment and sent to a pond for gravity settling prior to discharge into a nearby creek. The raw waste load from this mine is estimated to be 897,000 l/day (237,000 gal/day).

Mine Water Treatment

At facility 2010, the mine water and the runoff water are chemically treated by hydrated lime in the open pit mine sump. This facility has an automatic system with continuous monitoring of pH for neutralization prior to effluent discharge into the settling pond. The raw waste from the mine has a pH of about 3.0. The pH is raised to 6-9 by addition of lime and then pumped into a pond for gravity settling. There are currently two ponds and a third pond under construction to treat the mine discharge. Presently one of these ponds is in use and the other one is being excavated and cleaned so that it will be ready for use when the first pond is filled.

Mine Water Effluent

There is an intermittent effluent discharge to a nearby creek. The total annual effluent discharge is estimated to be 760,000,000 l/yr (200,000,000 gal/yr). The significant constituents in this effluent are reported to be as follows:

Parameter	Facility Data	New Pond Design	Verification Sampling
pH			2.6
Acidity			404
Hardness			3920
TDS			4348
TSS	23	25	1167
SO_4			1515
Fe, total	2.6	0.5	225
Fe, dissolved			177
Al	0.6	0.1	13.8
Pb	0.06	0.1	>0.2
Mn	1.3	0.5	156
Ni	0.05	0.05	1.52
Zn	0.01	0.1	2.1

The facility stated that the verification data reflect new acid seepage from adjoining property. The column "new pond design "represents the company's design criteria for building the third pond.

FLUORSPAR (SIC 1473)

There are fifteen significant facilities in the U.S. producing either fluorspar concentrates and/or finished acid grade and metallurgical grade fluorspar products. Six of these facilities are wet heavy media separation (HMS) facilities, producing both a finished product (metallurgical gravel) and upgraded and preconcentrated feed for flotation. Five facilities use froth flotation for the production of fluorspar alone or fluorspar with other minerals (barite, zinc, lead); three are fluorspar drying facilities drying imported filter cakes in kilns or air driers, and one is a fluorspar pelletizing facility, where spar filter cake is pressed to pellets, dried and shipped.

FLUORSPAR - HEAVY MEDIA SEPARATION (HMS) OPERATIONS

Process Description

An HMS facility may serve two purposes. First, it upgrades and preconcentrates the ore to yield an enriched flotation feed. Second, it produces a quantity of finished product (metallurgical grade gravel).

The ore is crushed to proper size in the crushing circuit, then washed and drained on vibrating screens to eliminate as much fines as possible. The oversize material from this operation is recycled back to the screen. The undersize is sent into a spiral classifier for recovery of a portion of

the flotation facility feed. The HMS cone feed consists of the middle size particles resulting the from the screening operation. The separatory cone contains a suspension of finely ground ferro-silicon and/or magnetite in water, maintained at a predetermined specific gravity. The light fraction (HMS tailings) floats and is continuously removed by overflowing a weir. The heavy particles (flotation feed) sink and are continuously removed by an airlift.

The float overflow and sink airlift discharge go to drainage screens where 95 percent of the medium carried with the float and sink drains through the screen, is magnetically separated from the slimes, and is returned to the circuit.

The float and sink products are passed over dewatering screens and the water is pumped back to the facility. A generalized flow diagram is given in Figure 12.

Raw Waste Loads

Raw wastes in this subcategory consist primarily of slimes from fines separation. At five of the facilities in this subcategory (facilities 2004, 2005, 2006, 2008 and 2009), there is no waterborne waste discharge from the HMS process. The water used in these facilities is recycled back through closed circuit impoundments. At facility 2007 the raw waste, consisting of the classifier overflow is discharged into a settling pond prior to discharge. The average value of the raw waste for facility 2007 is given as follows:

Waste Material	kg/kkg of product (lb/1000 lb)
slimes	340

Facility Water Use

Water consumption in these facilities ranges from 96 to 2700 l/kkg of feed to the facility (650-2300 gal/ton of feed). The hydraulic loads for the HMS facility were not known in two of the facilities (2008 and 2009) because the HMS and flotation facilities are located at the same site. They are operated as a combined unit and water consumption values were available for the combined operation. The hydraulic loads for the remaining facilities are given as follows:

Water Consumption Facility	l/kkg of feed (gal/ton) 2004	2005	2006	2007
	9,600 (2,300)	2,710 (650)	3,670 (880)	5,550 (1,330)

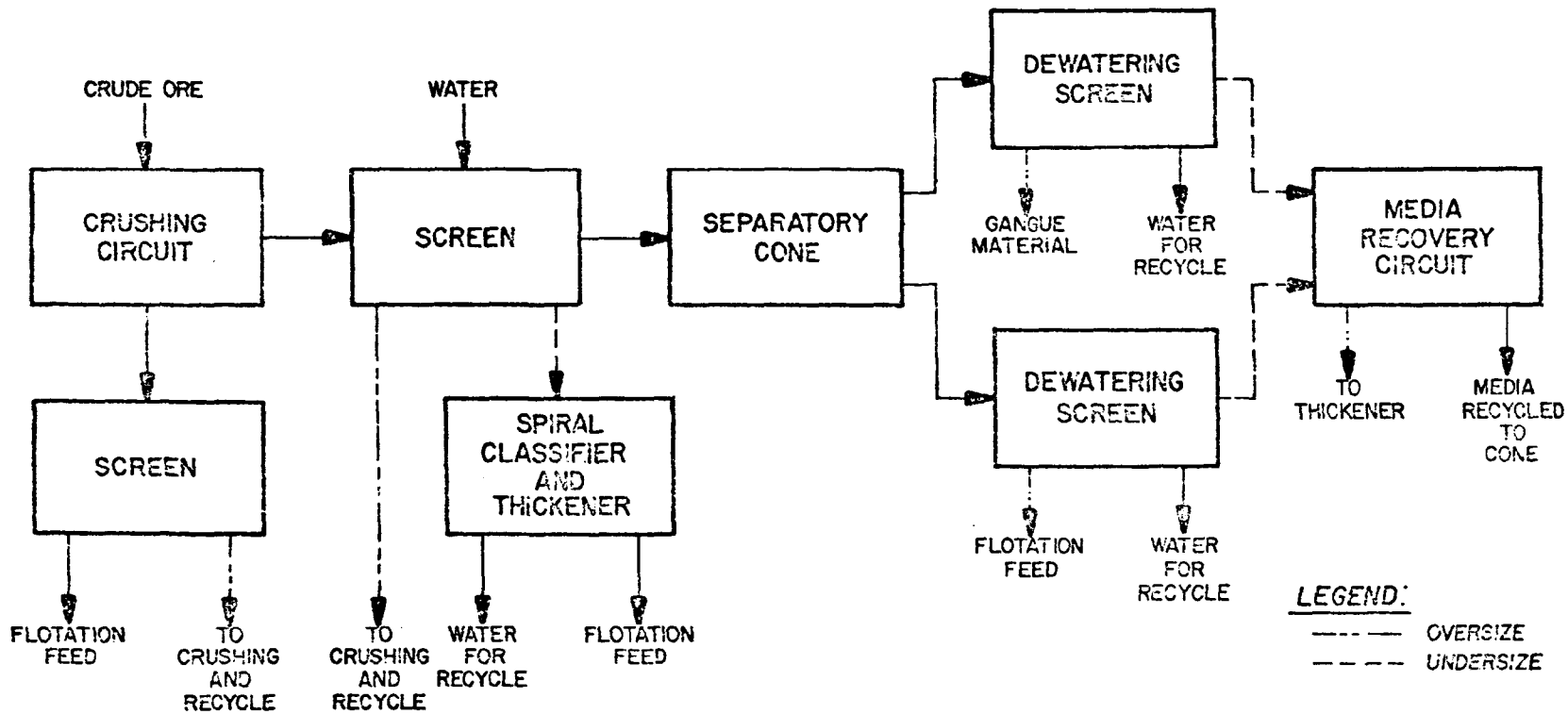

FIGURE 12
FLUORSPAR MINING AND PROCESSING
(HMS PROCESS)

Water Treatment

At four of the facilities (2004, 2005, 2006 and 2008); the process water from the thickener is pumped to either a holding pond or reservoir and then it is pumped back to the facility on a total recycle basis. At facility 2009, there are four ponds to treat the HMS facility tailings. Three of these ponds are always in use. The idle pond is allowed to dry and then harvested for settled fluorspar fines. At facility 2007 the HMS tailings enter a 1.8 hectare (4.5 acre) pond which has eight days of retention capacity. The water from this pond is then discharged.

Effluent Composition

There is no effluent discharge from five of the facilities in this subcategory (2004, 2005, 2006, 2008 and 2009). The significant constituents in the effluent from facility 2007 is given as follows:

Waste Components	mg/l	kg/kkg of product (lb/1000 lb)
Fluoride	3.0	0.04
TSS	10.0	0.13
Lead	0.015	0.0002
Zinc	0.09	0.0012

The average pH of this effluent is 7.8.

FLUORSPAR-FLOTATION OPERATIONS

Process Description

There are currently five fluorspar flotation mills in operation in the U.S. Three of these operations are discussed below. A fourth facility is in the startup stage and operating at 30-40 percent of design capacity. Information obtained on it is not considered to be representative of its operation.

In froth flotation facilities, fluorspar and other valuable minerals are recovered leaving the gangue minerals as mill tailings. Facility 2000 recovers fluorspar, zinc and lead sulfides. Facility 2003 recovers fluorspar only. At facilities 2000 and 2001, lead and zinc sulfides are floated ahead of fluorspar using appropriate reagents as aerofloats, depressants and frothers. At facility 2000, barite is floated from the fluorspar rougher flotation tailings.

In all these facilities, steam is added to enhance the selectivity of the operation. The various grades of concentrates produced are then stored in thickeners until filtered. Barite, lead sulfide, and zinc sulfide concentrates are sold in filter cake form. The fluorspar concentrates are dried in rotary kilns. The dried concentrates are then shipped.

At facility 2001, a portion of the fluorspar filter cake is sent to the pellet facility where it is mixed, pressed to pellets, dried and stored. A generalized flow diagram for flotation operation is given in Figure 13.

Raw Waste Loads

The process raw wastes in this subcategory consist of the tailings from the flotation sections. At facilities 2000 and 2001, the tailings contain 14 to 18 percent solids, which consist of 4-5 percent CaF_2, 20-25 percent $CaCO_3$, 25-30 percent SiO_2, and the remainder is primarily shale and clay. The average values of the raw wastes are:

	kg/kkg of product (lb/1000 lb)		
	2000	2001	2003
flotation tailings	1,800	2,000	2,000

Water Use

The ores have different physical characteristics and require different quantities of process water. A maximum of 20 percent of the process water is recycled from the thickeners. The remainder is discharged into a ponding system. The hydraulic loads for these facilities are:

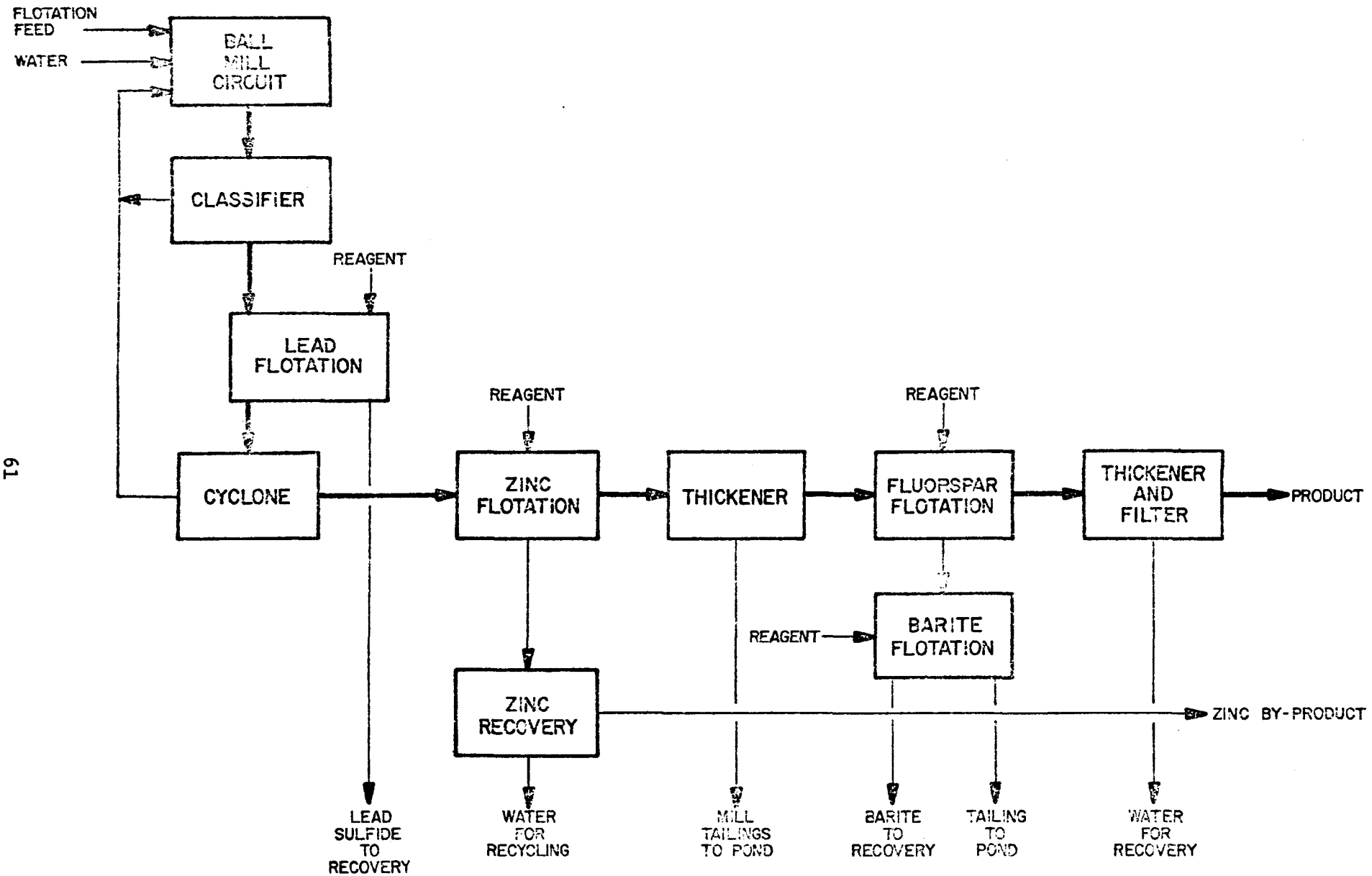

FIGURE 13
FLUORSPAR MINING AND PROCESSING
(FLOTATION PROCESS)

	l/day (mgd)		
	2000	2001	2003
Process	1,700,000 (0.45)	3,425,000 (0.905)	1,090,000 (0.288)
Boiler feed	30,000 (0.008)	---	54,500 (0.014)
Non-contact cooling	38,000 (0.010)	54,000 (0.014)	--- ---
Dust control	120,000 (0.032)	---	---
Sanitary uses	4,000 (0.001)	2,500 (0.0008)	---
Process waste	1,515,000 (0.40)	3,260,000 (0.865)	0
Water recycled or evaporated	377,000 (0.103)	196,500 (0.055)	1,144,500 (0.302)
	l/kkg of product (gal/ton)		
facility water use	11,900 (2,860)	20,200 (4,840)	21,030 (5,040)
process waste	9,540 (2,290)	19,100 (4,580)	0

Facility Waste Treatment

The waste water of the facilities in this subcategory is treated in settling and clarification ponds. At facility 2000, the mill tailings are pumped into a 7 hectare (17 acre) settling pond for gravity settling. The overflow from the settling pond flows into three successive clarification ponds of 2.8, 1.6, and 2.4 hectares (7, 4, and 6 acres, respectively). The effluent of the third clarification pond is discharged. Settling in the third clarification pond is hindered by the presence of carp and shad which stir up the sediments. Experiments are in progress using a flocculant in the influent line of the second clarification pond to reduce the total suspended solids in the effluent. These clarification ponds are situated below the flood stage level of the nearby river, and during flood seasons, the water from the river backs into the ponds. Some mixing does occur but when flood waters recede, most of the facility waste remains in the ponds.

At facility 2001, the tailings from the fluorspar rougher flotation cells, are pumped into a settling pond. The overflow from the settling pond is discharged.

Facility 2001 has a new 4 hectare (10 acre) clarification pond with a capacity of approximately 106 million liters (28 million gallons). The effluent from the first settling pond will be pumped to the new clarification pond. A flocculant will be added to the influent of the new pond in quantities sufficient to settle the suspended solids to meet the state specifications (TSS 15 mg/l). A portion of the water from the clarification pond (approximately 20 percent) will be recycled to the processing facility and the remainder which cannot be recycled will be discharged.

Total recycle operation has been attempted on an experimental basis by one of these operations for a period of eight months, without success. The failure of this system has been attributed to the complexity of chemical buildups due to the numerous reagents used in various flotation circuits.

The non-contact cooling water and the boiler blowdowns are discharged at facilities 2000 and 2001 without treatment. Facility 2003 mines an ore which is different from the ores processed in the other two facilities. This facility produces only fluorspar. The tailings from the mill go to two settling ponds in series. The overflow from the second settling pond is sent to the heavy media facility and there is no discharge. A new pond is being constructed at facility 2003.

Effluent

Facility 2003 has no discharge.

Effluents reported by facilities 2000 and 2001 for their current operation and anticipated performance are:

	concentration (mg/l)			
	2000		2001	
	Current operation	Anticipated	Current operation	Anticipated
pH	7.2	no change	8.2	no change
TSS	500	30-60	1,800	15-20
Fluoride	5.1	5.1	9.8	9.8

	kg/kkg of product (lb/1000 lb)			
	2000		2001	
	Current operation	Anticipated	Current operation	Anticipated
TSS	4.8	0.29-0.57	34.4	0.29-0.38

Fluoride	0.05	0.05	0.19	0.19

The results of verification sampling by the EPA contractor are shown below:

	2000	2001
pH	7.7	8.2
Alkalinity	359	340
Hardness	222	325
TSS	316	235
TDS	1056	1702
F	0.742	0.81
Fe (total)	5	2.9
Cd	0.13	0.02
Cr	0.11	0.05
Cu	2.39	0.35
Pb	0.86	0.20
Mn	0.43	0.17
Zn	<0.01	1.13

FLUORSPAR-DRYING AND PELLETIZING OPERATIONS

Process Description

There are presently three fluorspar drying facilities in the U.S. In these facilities imported filter cakes are dried and sold. The filter cake has about 9-10 percent moisture which is dried in kilns or in air driers. Two of these facilities have no waterborne discharge. They use baghouse collectors for dust control. The third drying facility is located at the same site as the company's hydrofluoric acid facility. This drying facility has an effluent from the wet scrubber on the drier, which is treated in the gypsum pond along with the acid facility effluent.

There are two pelletizing facilities in the U.S. One of these operations has been discussed previously under flotation (facility 2001). A second facility manufactures fluorspar pellets only. At this facility fluorspar filter cake is mixed with some additives, pressed to pellets, dried and stored. No waterborne pollutants are generated at this facility site.

Raw Waste Loads

No information was obtained on the wet fluorspar drying operation discussed above because it is an integral part of the hydrofluoric acid facility's overall operation. The combined effluent stream has been covered under the Inorganic Chemical Manufacturing category.

Facility Water Use

No water is used at these facilities and there are no effluents, except for the facility combined with the hydrofluoric acid manufacturing operation where the discharge is attributable to the HF operation.

Waste Water Treatment

None is required.

Effluents

There is no discharge.

MINE DISCHARGE IN FLUORSPAR OPERATIONS

There are presently seven fluorspar active mines in the U.S. Six of these mines are underground operations and one is a dry open-pit mine. Additionally, there are three underground mines in the development stage with no current production and five other mines with no production but are dewatered. The status and effluent discharge volumes from these mines are given as follows:

	l/day (mgd)
Mines used for dewatering purpose, only	
2080	no discharge
2081	273,000 (0.072)
2082	109,000 (0.029)
2083	6,540,000 (1.73)
2084	not pumped
Mines under development stage	
2085	273,000 (0.072)
2086	3,270,000 (0.86)
2087	not pumped
Productive mines	
2088	273,000 (0.072)
2089	490,000 (0.13)
2090	54,000 (0.014)
2091	303,000 (0.080)
2092	4,769,000 (1.26)
2093	1,892,000 (0.50)
2094	dry open pit

Mine 2080 is used as an emergency escape shaft, air shaft, and also to help dewater mine 2088. There are no discharge waters pumped from either mines 2084 and 2087. What water there is in these mines drains underground and eventually enters mine 2083.

It has been estimated that at production stage mine 2085 will have a discharge volume in the vicinity of 3,800,000 l/day (1 mgd). The present discharge is only a small fraction of the anticipated volume of water from this mine.

At mines 2091 and 2093, about 62 and 40 percent, respectively, of the mine discharge water is used at the mills. The remaining drainage is then discharged.

Mine Water Treatment

At all mines, presently, the effluent stream is discharged without any treatment into a receiving stream. Only effluent from mine 2091 passes through a very small pond, 0.1 hectare (1/4 acre), prior to being discharged into a creek. However, by 1975, after mines 2085 and 2092 are fully developed, the effluent discharge emanating from these mines will be treated in a settling pond to lower the suspended solid concentrations. Presently, these mines have low volume discharge, primarily mine seepage, which is pumped to surface and discharged. It is expected that both the effluent volume and the TSS concentrations will increase after the ore body is tapped.

Effluent Composition

Verification sampling of the significant constituents in the effluents from fluorspar mines are reported as follows:

			2085				2092		
	2081	2083	mine	settling pond	2089	2090	mine	settling pond	2093*
pH		7.6	7.6	7.4	8.1		7.9	8.0	
Alkalinity		224	276	216	864		210	197	
Hardness		336	1600	1600	221		235	222	
Cl		35	185	162	48		23	17	
TSS	483	2	15	29	135	4	53	20	17
TDS	697	478	3417	1753	583	536	379	364	
SO_4	25	107	480	575	61	56	38	32	
F	0.223	0.14	0.25	0.249	0.23	0.195	0.102	0.103	
Fe	4.27	0.05	0.66	0.26	2.0	0.05	1.33	0.50	0.9
Pb	3.0	0.2	0.2	0.2	0.2	0.2	0.2	0.2	0.075
Mn	0.16	0.05	0.05	0.62	0.11	0.01	0.18	0.18	0.1
Zn	6.42	0.76	0.01	5.26	0.06	0.5	0.17	0.08	0.235

*plant data

Fluoride content of 3.2 mg/l was reported for two mines (2085 and 2092). However, it is expected that the fluoride levels in the discharge from these two mines will be lowered after pumping of the mine water begins. Additionally, total suspended solids values of 10-300 mg/l were reported for mine 2092, it is anticipated that the TSS value for this discharge will be increased and possibly exceed the maximum reported value due to the increase of the underground activity.

Hydrogen sulfide concentrations up to 0.37 mg/l has been detected in the effluent of mine 2085. It has been reported that the H_2S content in the effluent has been steadily decreasing since an H_2S pocket was encountered.

SALINES FROM BRINE LAKES (SIC 1474)

The extraction of several mineral products from lake brines is carried out at three major U.S. locations: Searles Lake in California, Silver Peak, Nevada, and Great Salt Lake in Utah. The operations at these locations are integrated and the water and waste handling cannot be readily attributed to the separate products. The facilities at Searles Lake operate what is called the "Trona Process", not to be confused with the trona ore mining in Sweetwater County, Wyoming, discussed elsewhere. This complex process produces many products based on the brine constituents. The process operated at Great Salt Lake produces a smaller number of products. However, the waste handling and disposal techniques at all locations are quite similar.

SEARLES LAKE OPERATIONS

Process Description

Several minerals such as borax, lithium salts, salt cake, natural soda ash and potash are produced from the brine of Searles Lake, California, by a series of processing steps involving evaporation of the brine in stages with selective precipitation of specific ingredients. The recovery processes and raw material are unique to this location. These processes are carried out in a desert area adjacent to Searles Lake, a large residual evaporate salt body filled with saline brines. About 14 percent of the U.S. potash production is from this source, 74 percent of the U.S. natural sodium sulfate, 17 percent of the U. S. borax, and 12 percent of the natural soda ash.

At facility 5872, the brines are the raw material and are pumped into the processing facilities where the valuable constituents are separated and recovered. The residual brines, salts and end liquors including various added process waters are returned to the lake to maintain the saline brine volume and to permit continued extraction of the valuable constituents in the return water. There is no discharge as the recycle liquors are actually the medium for producing the raw material for the processes. Total brine into the facility is about 33,600,000 l/day (9.0 mgd) with about one quarter being lost by evaporation. The total recycle back to the salt body is the same volume, including added process waters. The salt body is actually two deposits separated by a layer of muds, and each deposit contains brines of different typical compositions:

constituent	upper structure brine weight percent	lower structure brine weight percent
KCl	4.90	3.50
Na_2CO_3	4.75	6.50
$NaHCO_3$	0.15	----
$Na_2B_4O_7$	1.58	1.55
$Na_2B_4O_4$	----	0.75
Na_2SO_4	6.75	6.00
Na_2S	0.12	0.30
Na_3AsO_4	0.05	0.05
Na_3PO_4	0.14	0.10
NaCl	16.10	15.50
water (by difference)	65.46	65.72
WO_3	0.008	0.005
Br^-	0.085	0.071
I^-	0.003	0.002
F^-	0.002	0.001
Li_2O	0.018	0.009

For potash production at Searles Lake, a cyclic evaporation-crystallization process is used in which about 16,350,000 l/day (4.32 mgd) of saline brine are evaporated to dryness. The brine, plus recycle mother liquor, is concentrated in triple effect steam evaporators to produce a hot concentrated liquor high in potassium chloride and borax. As the concentration proceeds, large amounts of salt (NaCl) and burkeite (Na_2CO_3, Na_2SO_4) are crystallized and separated. The former is returned to the salt body and the latter, which also contains dilithium sodium phosphate is transported to another process for separation into soda ash (Na_2CO_3), salt cake (Na_2SO_4), phosphoric acid and lithium carbonate. The hot concentrated liquor is cooled rapidly in vacuum crystallizers and potassium chloride is filtered from the resulting slurry. Most of the potassium chloride is dried and packaged while a portion is refined and/or converted into potassium sulfate. The cool liquor, depleted in potassium chloride, is held in a second set of crystallizers to allow the more slowly crystallizing borax to separate and be filtered away from the final mother liquor which is recycled to the evaporation-concentration step to complete the process cycle. The borax, combined with borax solids from the separate carbonation-refrigeration process, is purified by recrystallization, dried, and packaged. A process flow sheet is given in Figure 14.

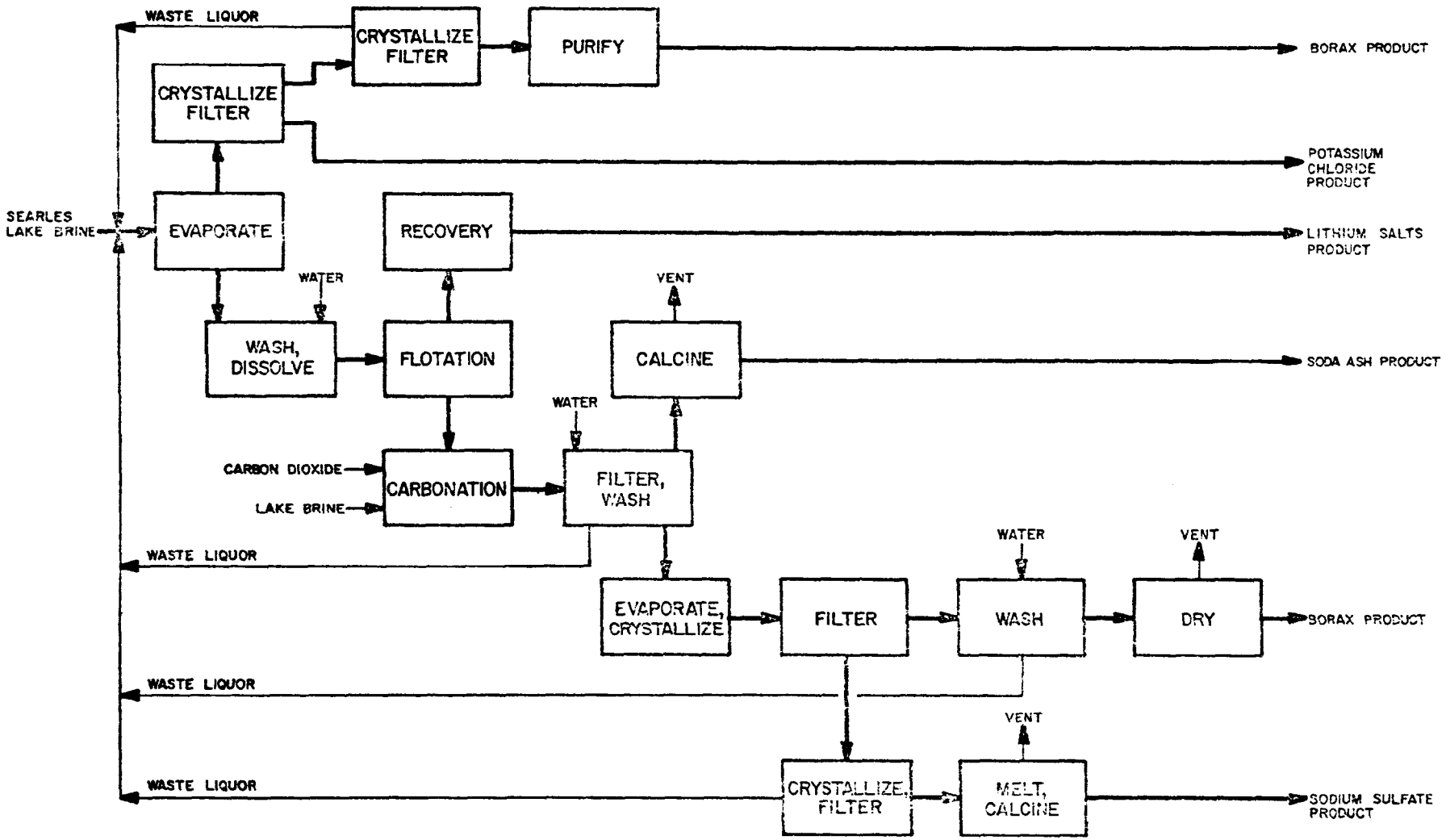

FIGURE 14

MINERALS RECOVERY FROM SEARLES LAKE

Raw Waste Load

The wastes from the basic evaporation-crystallization process, including the processes for potassium chloride, borax, soda ash, and salt cake, are weak brines made up of process waters, waste salts and end liquors. These are returned to the salt body in an amount essentially equal to the feed rate to the process--about 16,350,000 l/day (4.32 mgd). The recycle liquors enter both the upper and lower structures of the salt body. In the case of the carbonation-refrigeration system, the entire brine stream, depleted in sodium carbonate and borax, is recycled to the salt body to continue the solution mining.

Water Use

The overall water usage for the two facilities is about 33,600,000 l/day (8.88 mgd) of Searles Lake brine plus about one-third of this volume of fresh water used for washing operations.

Waste Water Treatment

As the evaporation-crystallization process involves only recovery of salts from natural saline brines, with the addition of only process water, the only wastes are depleted brines and end liquors which are returned to the salt body without treatment. The same considerations apply to the carbonation-refrigeration process.

Effluent and Disposal

The only wastes are depleted brines and end liquors which are returned to the brine sources. There is no discharge of water.

GREAT SALT LAKE RECOVERY OPERATIONS

Process Description

At the present time four mineral products are produced at this location: sodium chloride, sodium sulfate, potassium sulfate and bittern liquors. Recovery of pure lithium and magnesium salts is being planned for the future. About 20 percent of the U.S. natural sodium sulfate comes from this location.

Brine from the north arm of Great Salt Lake is pumped into a series of evaporation ponds. Partial evaporation occurs selectively precipitating out sodium chloride. The residual brine is pumped to a second series of ponds for further evaporation and the precipitated salts are harvested.

In the second series of ponds, further evaporation of the brine occurs to precipitate sodium sulfate. The concentrated residual brine is pumped to a third series of ponds and the sodium sulfate is harvested. In the third series of ponds, further evaporation occurs effecting precipitation of potassium sulfate. The residual brine is then pumped to a fourth series of ponds for bittern recovery and the potassium sulfate is harvested.

The harvested raw salts are treated in the following manners prior to shipment:

(a) Sodium chloride is washed with fresh water, dried, and packaged.
(b) Sodium sulfate is treated in the same manner as sodium chloride.
(c) Potassium sulfate is dissolved in fresh water, recrystallized from solution, dried, and packaged.

The washwaters from the sodium sulfate and chloride purifications and waste water from the recrystallization of potassium sulfate are discharged to the Great Salt Lake. A process flowsheet is given in Figure 15.

Raw Waste Load

The raw wastes from the process consist of salts present in the original lake brines which are lost during the washing and recrystallization operations. There is also some discharge due to yearly washout of the evaporation ponds with fresh water. These are all returned to the Great Salt Lake. The amounts of materials lost by these routes has not been provided.

Water Use

Facility water intake includes lake brine, well water and municipal reservoir water:

	l/day	(mgd)
Great Salt Lake brine	163,000,000	(43.0)
municipal reservoir	11,000,000	(2.9)
well	1,900,000	(0.5)

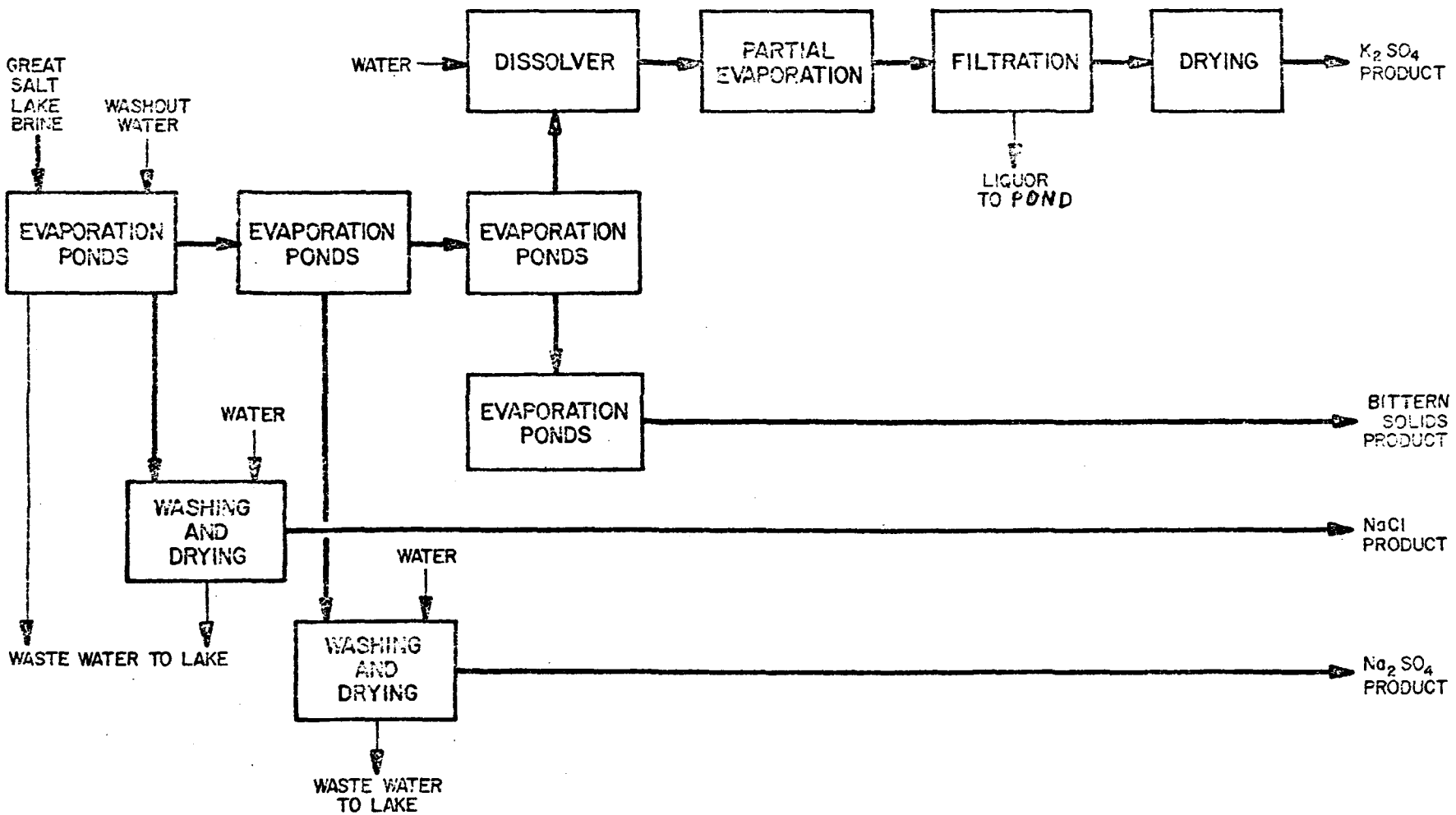

FIGURE 15
MINERALS RECOVERY AT GREAT SALT LAKE

The consumption of water is as follows:

	l/day	(mgd)
evaporated	163,000,000	(43.0)
discharged	11,000,000	(2.9)
boiler	910,000	(0.24)

Also small amounts of water are used for sanitary purposes.

Wastewater arises from two sources: washing of the recovered sodium chlorides and sulfate, and recrystallization of recovered potassium sulfate. The waste water from these operations contains these three substances as constituents along with minor amounts of materials present in lake brine bitterns (i.e., magnesium salts). Since the waste water constituents are similar to the lake brine, these wastes are discharged without treatment back to the Great Salt Lake. The compositions of the intake brine and effluent wash water are, in terms of mg/l:

	lake brine	facility discharge
sodium	96,800	33,450
magnesium	49,600	99,840
chloride	160,000	78,000
sulfate	14,500	55,500
TSS	1945	703

The effluent consists primarily of sodium chloride. However, this is variable since much more NaCl is recovered than is saleable. Only the saleable material is retained. The balance is washed back to the brine source.

Waste Water Treatment

The waste water brines are discharged back to Great Salt Lake without treatment. This is necessary to maintain the lake volume.

Effluent and Disposal

There is no discharge other than the waste brines which are returned to the lake source.

SILVER PEAK, NEVADA, OPERATIONS

Process Description

This facility manufactures lithium carbonate. Brine containing lithium salts is formed by solution mining an underground source and pumped to the surface to form a man-made brine lake. This consists of a series of evaporation ponds for preliminary concentration. After this step, the brine is then treated with lime to precipitate magnesium salts as the hydroxide. The magnesium hydroxide is recovered periodically from the ponds as a solid waste.

The treated brine is then further concentrated by evaporation to partially precipitate sodium and potassium salts. These are periodically harvested from the ponds and stored for future processing to recover potash values, and the concentrated brine is again reacted with soda ash and the lithium carbonate formed is filtered, dried, and packaged. The spent brine is returned to the preliminary evaporation ponds for mixing with fresh material. A process flowsheet is given in Figure 16.

Raw Waste Load

Process raw wastes listed below consist of magnesium hydroxide sludges and precipitated sodium and potassium chlorides. The magnesium hydroxide sludge is currently disposed of by land dumping and the mixture of alkali halides is land stored for future processing to recover potash.

Waste	kg/kkg of product (lb/1000 lb)
Magnesium hydroxide sludge	680
NaCl and KCl	187,000

Water Use

Facility water consists of brine from an underground source and fresh water used for washout purposes. All of this water is evaporated during the process and all of the wastes produced as solids.

	l/kkg of product (gal/ton)
Process brine	1,500,000 (360,000)
Process washout water	36,800 (8,500)

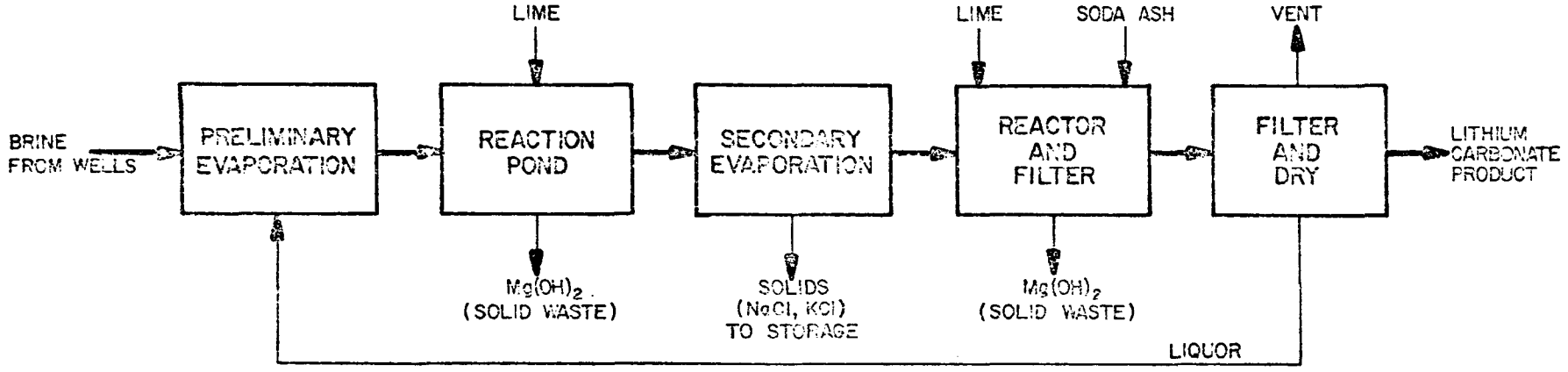

FIGURE 16

LITHIUM SALT RECOVERY
NATURAL BRINE, SILVER PEAK OPERATIONS

BORAX (SIC 1474)

The whole U.S. production of borax is carried out in the desert areas of California by two processes: the mining of borax ore and the Trona process. This latter process is discussed in detail in the section on salines from brine lakes. The mining of ore accounts for about three-fourths of the estimated U.S. production of borax. The facility discussed herein is the only U.S. producer by this method.

Process Description

Borax is prepared by extraction from a dry mined ore which is an impure form of sodium tetraborate decahydrate (borax). The ore is crushed, dissolved in water and recycled mother liquor, and the solution is fed to a thickener where the insolubles are removed and the waste is sent to percolation-proof evaporation ponds. The borax solution is piped to crystallizers and then to a centrifuge, where solid borax is recovered. The borax is dried, screened and packaged and the mother liquor recycled to the dissolvers. A process flow diagram is given in Figure 17.

Raw Waste Load

Wastes from this process at the facility consist of 800 kg of insolubles per kkg of borax product from the ore. This amount is independent of startup and shutdown operation.

Water Use

Fresh water consumption at the facility amounts to 2,840 l/kkg (680 gal/ton). An additional 835 l/kkg (200 gal/ton) enters via the ore. Most of the cooling water is recycled and all the process waste water is fed to evaporation ponds. The consumption of water in detail is:

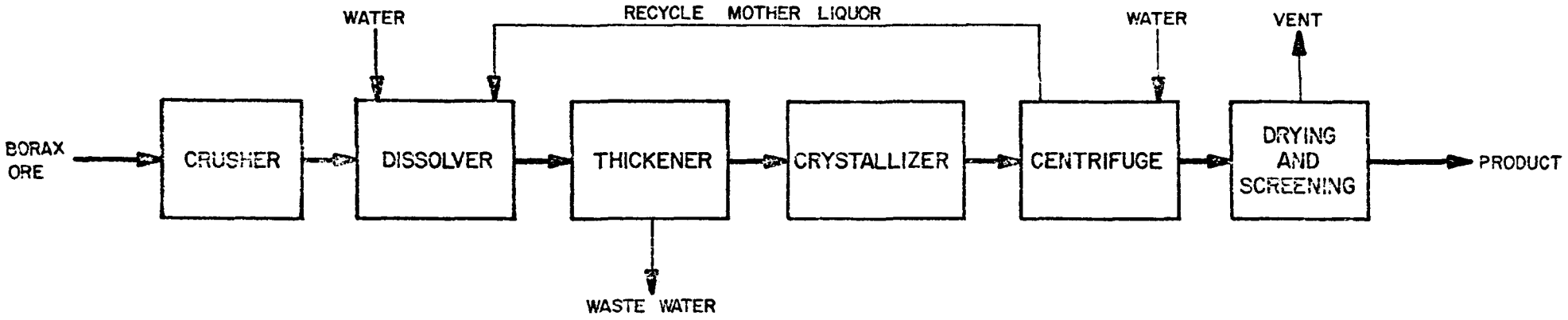

FIGURE 17
BORATE MINING AND PROCESSING

	l/kkg of product (gal/ton)
process consumed	668 (160)
process waste discharge	1,630 (390)
contact cooling discharge	313 (75)
non-contact cooling discharge	104 (25)
boiler feed	296 (71)
sanitary	25 (6)
road conditioning	271 (65)
not otherwise allocated	367 (88)
total consumption	3,670 (880)

Waste Water Treatment

Present treatment consists of percolation-proof evaporation ponds.

Effluents

There is no facility effluent. The compositions in mg/l of the intake water and the waste water sent to the evaporation ponds are:

	intake water	to evaporation ponds
alkalinity (total)	188	10,830
hardness (total) ($CaCO_3$)	3.5	1,145
chloride	176	3,100
nitrogen (NO_3^-)	3.5	2.8
COD	<5	480
BOD	<5	81

POTASH (SIC 1474)

Potash is produced in four different geographical areas by four different processing methods. These methods are:

(1) Dry mining of sylvinite ores followed by flotation or selective crystallization to recover potash as potassium chloride from the sylvinite and dry mining of langbeinite ores followed by leaching to recover potash as langveinite from the ores. A portion of the leached langbeinite, usually fines from product screening, is reacted in solution with potassium chloride to produce potassium sulfate and magnesium chloride. The latter is recovered as a co-product or discarded as a waste. These are the processes employed in the Carlsbad, New Mexico, area operations.

(2) Solution mining of Searles Lake brines followed by several partial evaporation and selective crystallization steps to recover potash as KCl. During the several process steps, 12 other mineral products are also recovered. This is discussed earlier.

(3) Solution mining from Utah sylvinite deposits. This method is used to recover potash as a brine, which is then evaporated. The solids are separated by flotation to recover potassium chloride. The sodium chloride is a solid waste.

(4) Evaporation of Great Salt Lake brines. This process is similar to the Searles Lake operation in that the brine is evaporated in steps to selectively recover sodium chloride and sulfate and potassium sulfate. The latter product is purified by recrystallization. All of the wastes from this process which consist of unrecovered salts are returned to the lake. This is also discussed earlier.

CARLSBAD OEPRATIONS

Process Description

There are two processes employed in the six Carlsbad area facilities which account for about 84 percent of the U.S. production of potash. One is used for recovery of potassium chloride and the other for processing langbeinite ores.

Sylvinite ore is a combination of potassium and sodium chlorides. The ore is mined, crushed, screened and wet ground in brine. The ore is separated from clay impurities in a desliming process. The clay impurities are fed to a gravity separator which removes some of the sodium chloride

precipitated from the leach brine and the insolubles for disposal as waste. After desliming, the ore is prepared for a flotation process, where potassium and sodium chlorides are separated. The tailings slurry and the potassium chloride slurry are centrifuged with the brines returned to the facility circuit. These tailings are then wasted, and the sylvite product is dried, sized and loaded for shipment or stored for future shipment. A process flowsheet is given in Figure 18.

Langbeinite is a natural sulfate of potassium and magnesium, $K_2Mg_2(SO_4)_3$, and is intermixed with sodium chloride. This ore is mined, crushed, and the sodium chloride is removed by leaching with water. The resulting langbeinite slurry is certrifuged with the brine being wasted and the langbeinite dried, sized and loaded for shipment or stored for future shipment.

A portion of the langbeinite, usually the fires from sizing, are reacted in solution with potassium chloride to form potassium sulfate. Partial evaporation of a portion of the facility liquors is used to increase recovery by returning precipitated solids to reaction. The remaining liquor from the evaporation step is either discharged to an evaporation pond or evaporated to dryness to recover magnesium chloride as a co-product. The disposition of the waste liquor is determined by the saleability of the magnesium chloride co-product and the cost of water to the facility. The potassium sulfate slurry from the reaction section is centrifuged with the liquor returned to the facility circuit and the resulting potassium sulfate product is dried, sized and loaded for shipment or stored for future shipment. A simplified process flowsheet is given in Figure 19.

All six facilities at Carlsbad processing sylvinite ore are described above. Only two process langbeinite. One facility also processes and purifies langbeinite ore for sale. In that case, the ore is dry mined, crushed and cold leached to remove sodium and potassium chlorides. The material is then washed free of clays, recovered, dried and packaged.

Raw Waste Loads

For sylvinite ore processing, the raw wastes consist largely of sodium chloride and insoluble impurities (silica, alumina, etc.) present in the sylvinite ore. In langbeinite processing the wastes are insolubles and magnesium chloride. A comparison of the raw wastes of two sylvinite facilities (facilities 5838 and 5843) with langbeinite raw wastes (facilities 5813 and 5822) is given below. Differences in

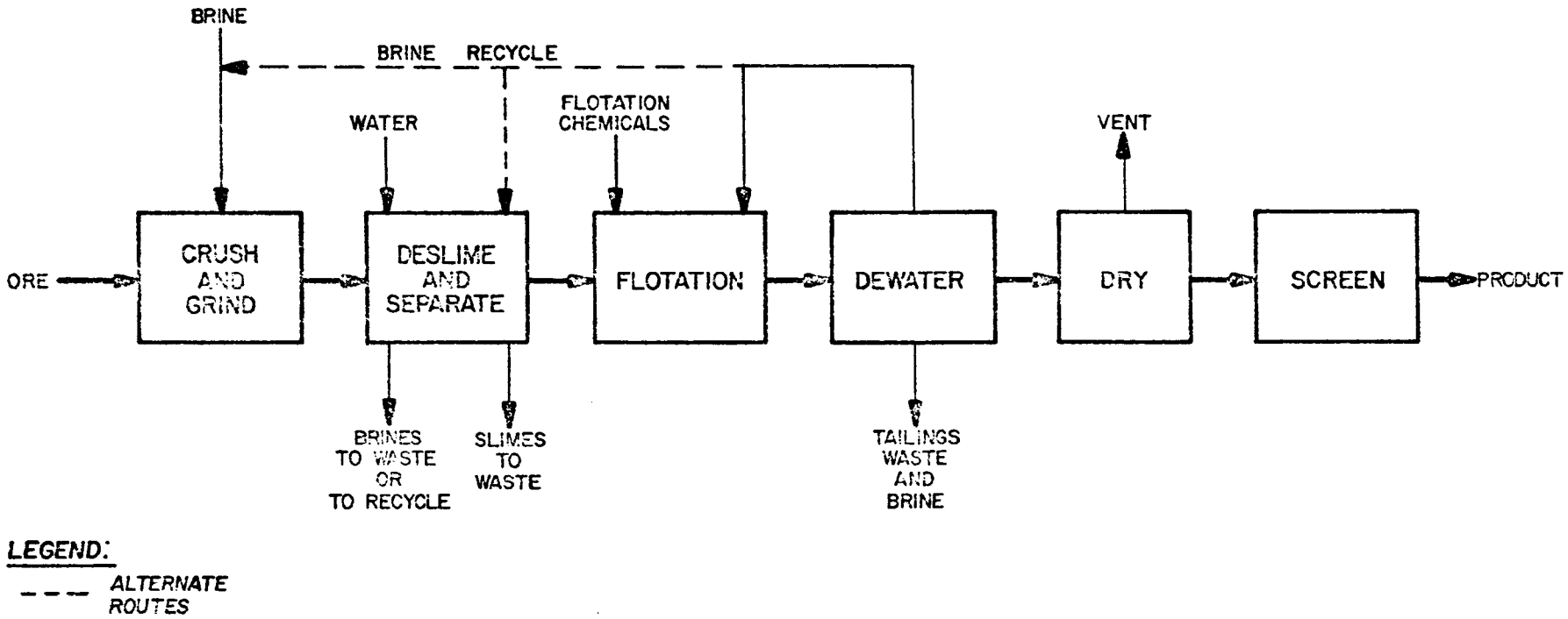

FIGURE 18
POTASSIUM CHLORIDE MINING AND PROCESSING FROM SYLVINITE ORE

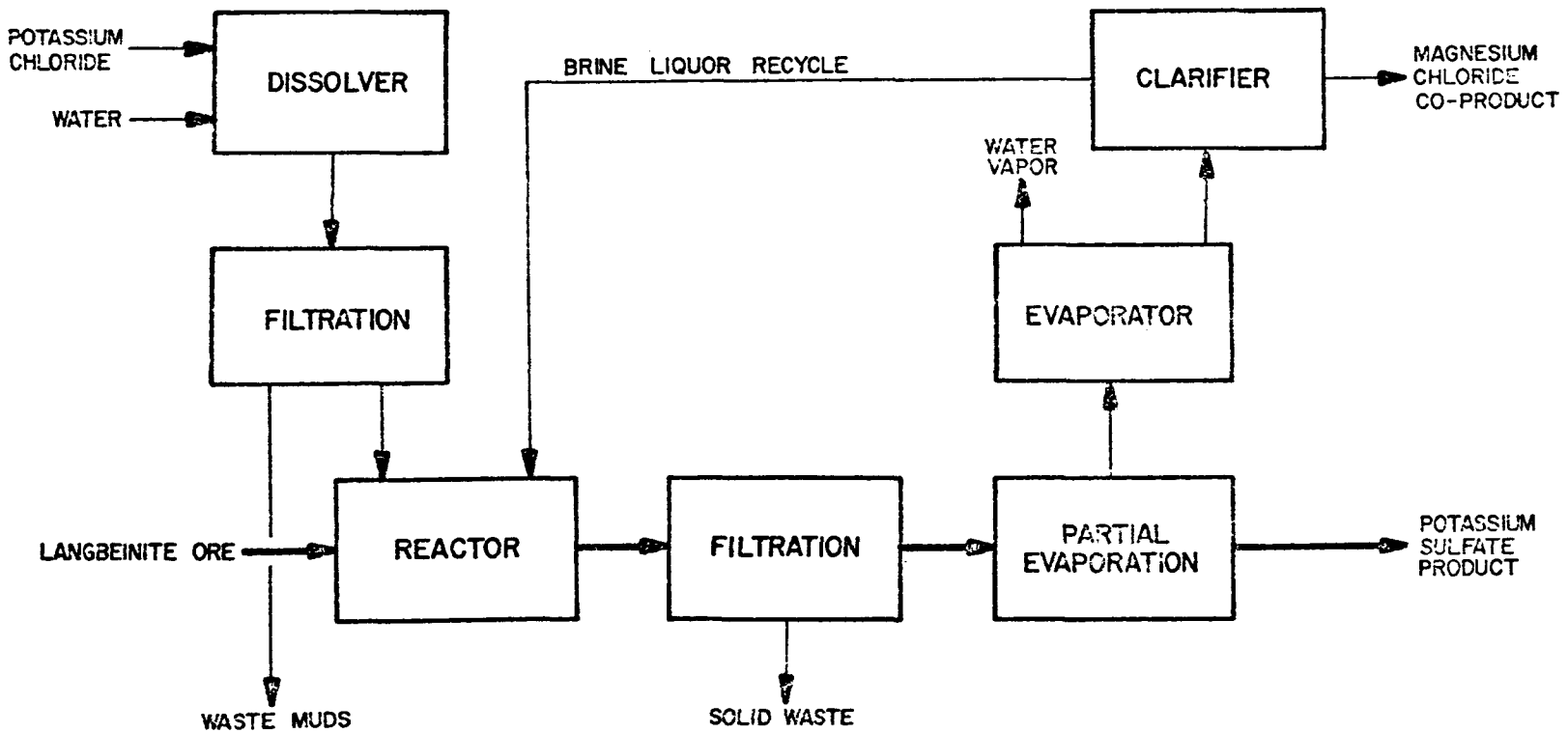

FIGURE 19
LANGBEINITE MINING AND PROCESSING

ore grades account for differences in the clay and salt wastes:

Facility	kg/kkg of product (lb/1000 lb) 5838	5843
wastes:		
clays	75	235
NaCl (solid)	3,750	2,500
NaCl (brine)	1,400	1,000
KCl (brine)	75	318
$MgSO_4$	640	75
K_2SO_4	440	0

Facility	5813	5822
langbeinite process	conversion	purification
wastes:		
clays	15-30	45
NaCl (solid)	0	1,400
$MgCl_2$ (brine)	0-2,000	0

A small percentage of the wastes of facility 5838 is sold. Part of the magnesium chloride from langbeinite processing is periodically recovered for sale and part of the remaining brine solution is recycled for process water. These brines contain about 33 percent solids. The wastes consist of muds from the ore dissolution and the wasted brines. The latter brine can sometimes be used for $MgCl_2$ production if high grade, low sodium content langbeinite ore is used. The composition of the brines after K_2SO_4 recovery is:

potassium	3.29%
sodium	1.3%
magnesium	5.7%
chloride	18.5%
sulfate	4.9%
water	66.7%

Water Use

Water use at sylvinite ore processing facilities is shown as follows:

Facility	l/kkg of product (gal/ton) 5838	5843
input:		
fresh water	6,420 (1,540)	1,750 (421)
brine	not known	3,160 (760)
use:		
process contact	34,600 (8,300)	11,900 (2,900)
cooling	0	0
boiler feed	0	205 (50)
consumption:		
process waste	6,420 (1,540)	4,710 (1,130)
boiler blowdown	0	205 (50)
total	6,420 (1,540)	4,915 (1,180)

Water use at langbeinite ore processing facilities is shown as follows:

Facility	l/kkg of product (gal/ton) 5813	5822
input:		
fresh water	8,360 (2,000)	4,800 (1,200)
use:		
leaching and washing	5,000 (1,200)	4,800 (1,200)
cooling	30,000 (7,200)	0
consumption:		
process evaporation	0-1,670 (400)	0
process waste	0-1,670 (400)	4,800 (1,200)
cooling water evaporation total	6,700 (1,600)	0
	8,360 (2,000)	4,800 (1,200)

There are no effluent streams from either of the langbeinite ore processing facilities. Much water is recycled or lost during process evaporation steps. All waste water streams from these facilities are fed to evaporation ponds from which there are no discharges.

Waste Water Treatment

All waste streams from the sylvinite process are disposed of on the ground surface with the exception of the wastes sold from one facility. At the langbeinite conversion facility

20-30 percent of the cooling water is evaporated. All the process waste water from the langbeinite purification facility is fed to an evaporation pond. All known deposits of langbeinite ore in the U.S. are in southeastern New Mexico.

Effluent

There is no discharge from the sylvinite or the langbeinite facilities. All wastes are land disposed on-site.

UTAH OPERATIONS

Process Description

Solution mining of sylvinite is practiced at two facilities in Utah. The sylvinite (NaCl, KCl) is solution mined and the resulting saturated brine is drawn to the surface and then evaporated to dryness in large surface ponds. The dried recovered material is then harvested from the ponds and separated by flotation into sodium and potassium chlorides. The sodium chloride tailings are discarded as a waste and the recovered potassium chloride is then dried and packaged. A process flowsheet is given in Figure 20.

Raw Waste Load

The raw waste at facility 5998 consists of 640 kg of waste sodium chloride per kkg of product from the flotation-separation step. There are no other wastes.

Water Use

Fresh water is used for process purposes at facility 5998 in the following amounts: 10,600,000 l/day (2.8 mgd) and 11,700 l/kkg (2,800 gal/ton). Water is used first on the flotation circuit and then in the solution mining. The resulting brine from these operations is evaporated and then processed in for the flotation unit. There is no discharge of process water.

Waste Water Treatment

All process water is evaporated. No treatment is needed.

Effluent and Disposal

There are no waste waters for discharge. The sodium chloride raw waste is disposed of on land.

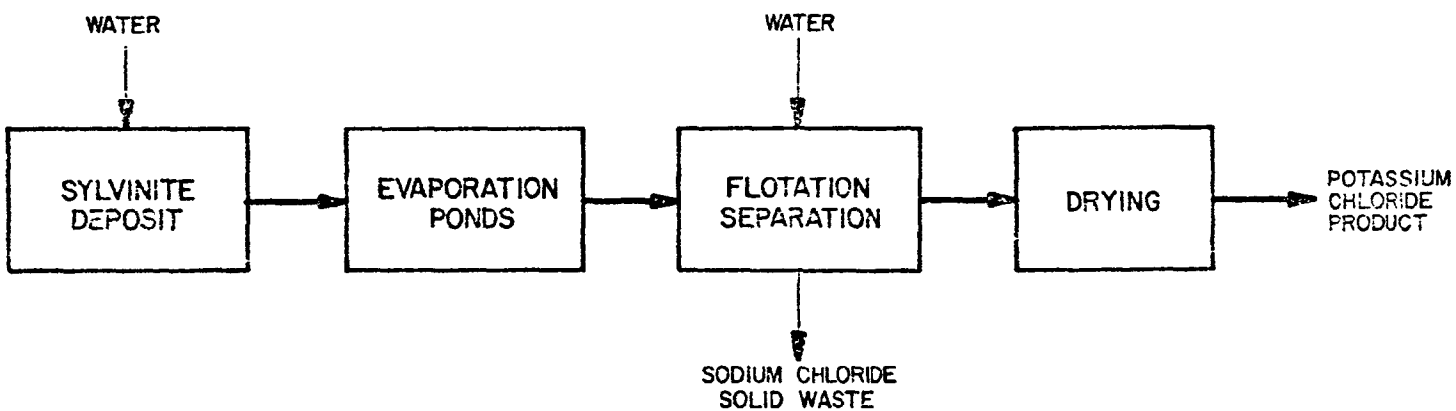

FIGURE 20
POTASH RECOVERY BY SOLUTION MINING OF SYLVINITE

All U.S. mining of trona ore (impure sodium sesquicarbonate) is carried out in Sweetwater County, Wyoming, in the vicinity of Green River. The deposits are worked at four facilities. Three not only mine trona ore, but also process it to the pure sodium carbonate (soda ash). One of these three facilities also produces other sodium salts using soda ash as a raw material. The fourth facility has only mining operations at this time, but plans to build a one million tons per year soda ash facility on the site in the near future.

The 1973 production of soda ash from these deposits amounted to 3,100,000 kkg (3,400,000 tons). This corresponds to about 5,800,000 kkg of trona ore mined (6,500,000 tons).

The facility data contained herein are current except for facilities 5962 and 5976 which are appropriate to the 1971 period when the discharge permit applications were processed.. The trona ore mining rate in 1971 was approximately 4,000,000 kkg/yr (4,400,000 tons/yr). Rapid expansion in capacity of these facilities has been taking place in recent years and continues at this time.

Since the mining and ore processing operations are integrated at these facilities, they are covered as a whole by this analysis. All four facilities are represented in the data.

Process Description

Mining Operations

The trona deposits lie well beneath the surface of this arid region and are worked by room and pillar mining or longwall mining at depths of 240 to 460 m (800 to 1500 ft). The broken ore is transported to the surface and stockpiled for further processing. The mining is a dry operation except for leakage from overlying strata through which the mine shafts were sunk or from underlying strata under pressure. All four facilities experience such mine leakage.

Ore Processing

The on-site refining process for trona ore consists of its conversion to the pure sodium carbonate, called "soda ash". The processing includes the removal of insoluble impurities through crushing, dissolving and separation, removal of organic impurities through carbon absorption, removal of excess carbon dioxide and water by calcining and drying to soda ash. Two variations of the process are used, the

"sesquicarbonate" process and the "monohydrate" process. At present all three soda ash refineries use the monohydrate process. One also uses the sesquicarbonate process. General process flow diagrams of both processes are shown in Figures 21 and 22 with the raw materials and principal products material balances given in units of kg/kkg soda ash product.

These processes both require large quantities of process and cooling water for efficient operation, but the arid climate in this area (average annual precipitation of 7 to 8 inches) allows for disposal of waste water through evaporation in ponds.

Raw Waste Loads

Raw wastes from these operations come from three sources: mine pumpout water, surface runoff and ground water, and ore processing water. The wastes in the mine and surface water are principally saline materials (dissolved solids) and suspended solids picked up in the ground. These materials are naturally present in the surrounding earth or the aquifer. The ore processing raw wastes are principally the impurities present in the trona ore plus some unrecovered sodium carbonates, carbon, filter aids, and treatment chemicals as well as any minerals entering with the makeup water.

Mine Pumpout Raw Wastes

The average mine pumpout at these facilities ranges from less than 19 to 1,140 l/min (5 to 500 gpm).

waste materials (mg/l)	5962	5976
dissolved solids	74,300	11,500
suspended solids	369	40
COD	346	2.1
ammonia	not available	8.1
fluoride	" "	11
lead	" "	0.023
chloride	" "	1,050
sulfate	" "	655

Runoff and Ground Water Raw Wastes

High ground water levels during the March through August period give a seasonal water flow in the 5962 facility containing 2,160 kg/day (4,750 lb/day) of total solids, principally dissolved solids. This particular ground water problem apparently does not exist at the other facilities.

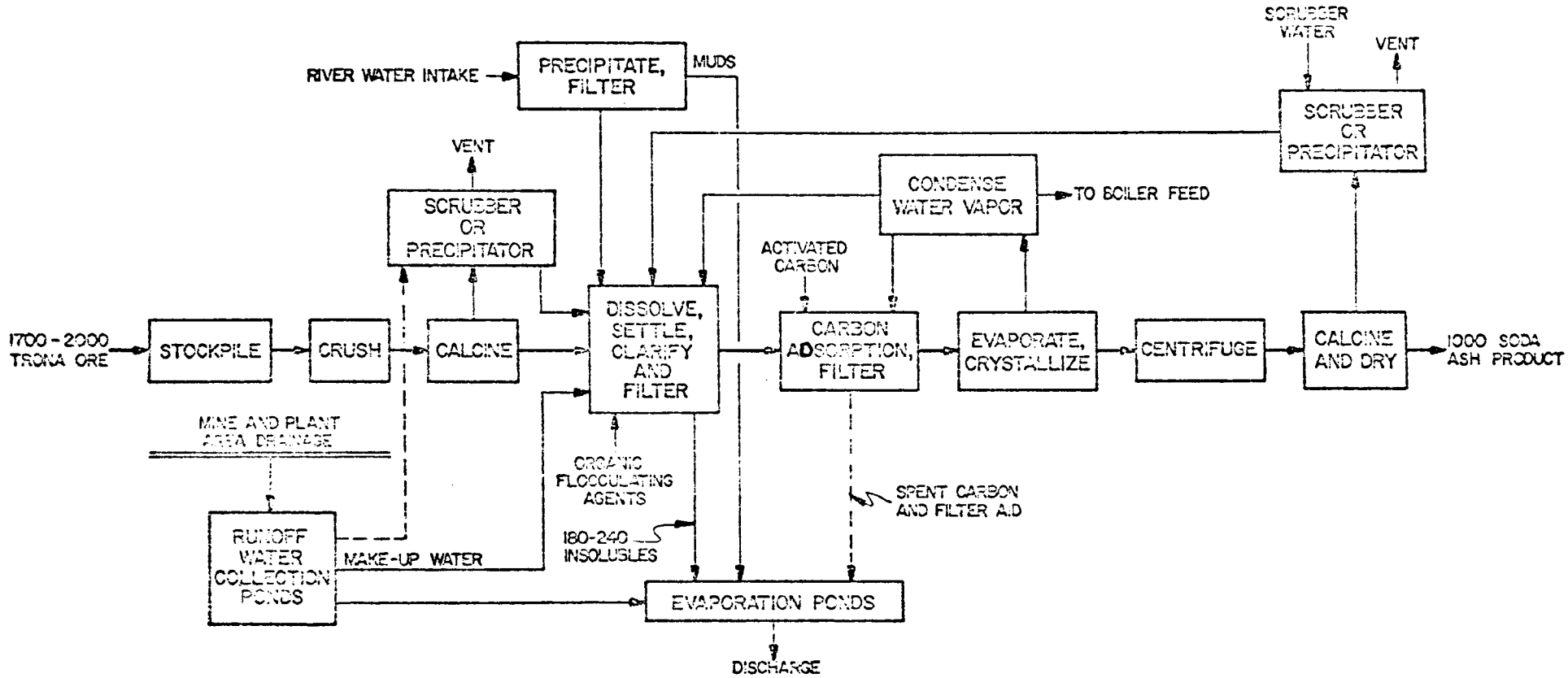

FIGURE 21

TRONA ORE PROCESSING BY THE MONOHYDRATE PROCESS

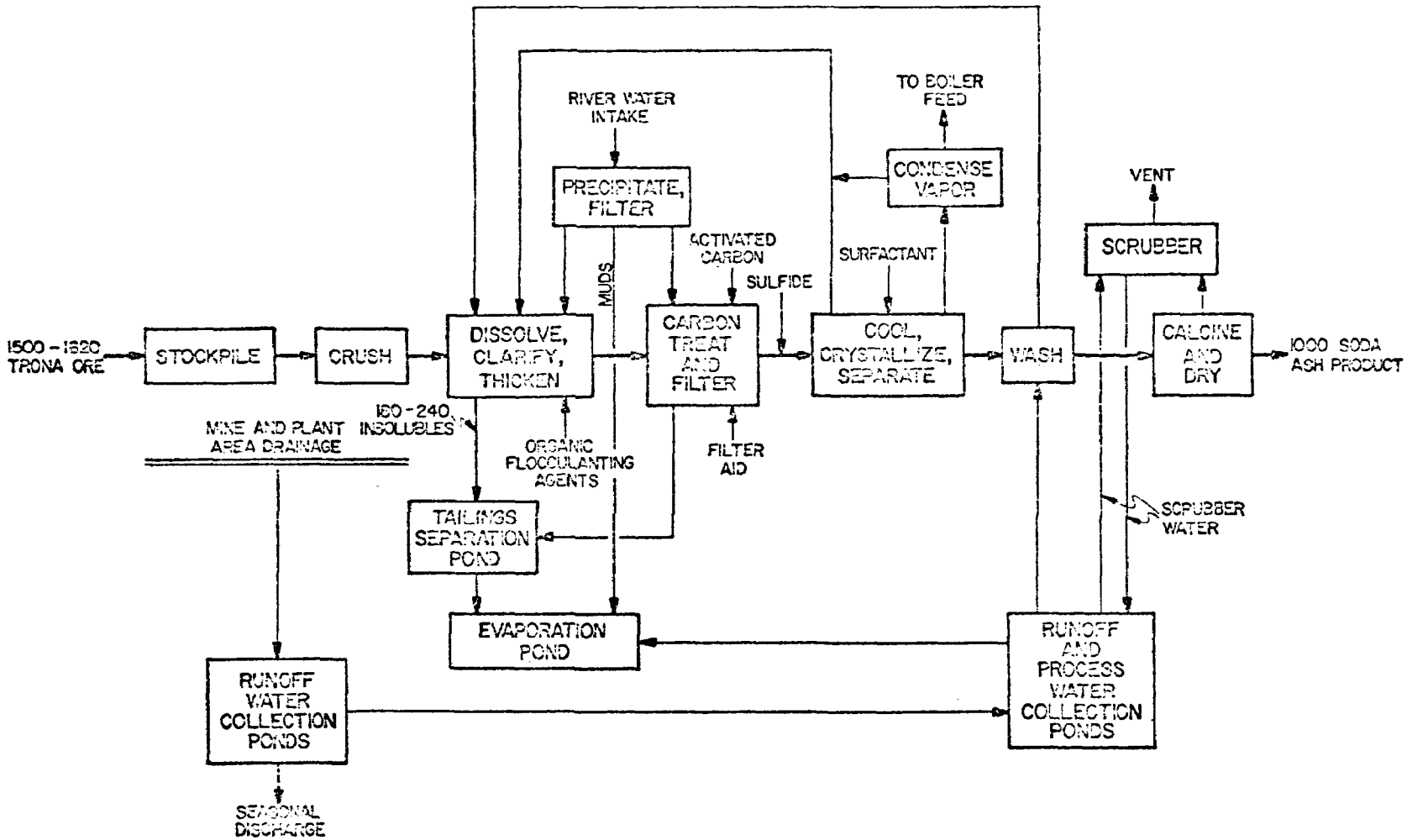

FIGURE 22
TRONA ORE PROCESSING
BY THE SESQUICARBONATE PROCESS

Rainwater and snow runoff discharges are highly variable and also contain saline dissolved solids and suspended solids.

Ore Processing Raw Waste

Unlike the foregoing wastes, the ore processing wastes are principally related to the production rate and, hence, are given on the basis of a unit weight of ore:

waste material	kg/kkg of ore (lb/1000 lb)
ore insolubles (shale and shortite)	100-140
iron sulfide (FeS)	0-1
sodium carbonate	60-130
spent carbon and filter aids (e.g., diatomaceous earth, perlite)	0.5-2

The composition of the mill tailings water flow from facility 5933 to the evaporation ponds, is:

total dissolved solids:	15,000 mg/l
total suspended solids:	2,000 mg/l
total volatile solids:	2,500 mg/l
chloride:	3,400 mg/l

The Green River, which is the principal source of process water for all three soda ash refining facilities, has the following average characteristics measured in the third quarter of 1974:

flow:	47,000 l/sec
pH:	8.6
total solids:	326 mg/l
total hardness:	127 mg/l
carbonate:	77 mg/l
calcium:	60 mg/l
magnesium:	6.4 mg/l
sulfate:	120 mg/l
chloride:	15 mg/l
silica:	5.1 mg/l

The Fontanelle Dam is upstream of the intakes of these facilities and regulates the flow past these intakes to smooth out natural variability.

Water Use

Water use at the mines having attached refineries is determined principally by the refining process. The only water associated with the mines is mine pumpout, dust control water and sewage, the latter two being rather small.

Water Intake

Water intake to the facilities comes principally from the Green River (fresh water) and from mine pumpout (saline). In some cases mine pumpout is used as part of the process water and in others it is discharged to the treatment ponds. The amounts of river water intake at the three soda ash refiners are:

	l/day (mgd)	l/kkg of prod. (gal/ton)
average intake	8.7×10^6 (2.3)	2,600 (630)
range of average intake	$6.3-10.6 \times 10^6$ (1.7-2.8)	2,000-3,200 (480-760)

Mine pumpout for all four trona ore mining facilities are:

	l/day (mgd)
average flow	640,000 (0.17)
range of average flows	25,000-1,640,000 (0.007-0.43)

Relative flow per unit production values for the mine pumpout are not useful since the flow is not influenced by production rate.

There are three major routes of consumption of the water taken in to these facilities: evaporation in the course of refining via drying operations and cooling water recycling, discharge of waste water to evaporation ponds (both process and sanitary), and by discharge of wastes to waterways. The consumption of water for the three soda ash refiners via these routes is:

total consumption	l/day (mgd)	l/kkg of product (gal/ton)
average	9.3×10^6 (2.5)	2,840 (680)
range of averages	$7.08-10.6 \times 10^6$ (1.9-2.8)	2,250-3,200 (540-760)
evaporation in processing		
average	3.4×10^6 (0.9)	1,100 (260)
range of averages	$3.0-3.8 \times 10^6$ (0.8-1.0)	940-1,200 (230-280)
net flow to evaporation ponds		
average	5.8×10^6 (1.5)	1,800 (430)

range of averages	$4.1-6.8 \times 10^6$ (1.1-1.8)	1,300-2,000 (320-490)

facility discharge of wastes

average	23,000 (0.006)	8 (2)
range of averages	0-45,000 (0-0.012)	0-13 (0-3)

A significant variation in the above flows during the course of a year would be the effect of increase in production rate occasioned by a facility expansion.

Waste Water Treatment

Process waste waters go to tailings separation ponds to settle out the rapidly settling suspended materials and then to the final disposal ponds which serve principally or wholly as evaporation ponds. Where process water discharge takes place (at present only facility 5933), the overflow is from these ponds.

The ground water and runoff waters are also led to collection ponds where settling and large amounts of evaporation take place. The excess of these flows at the 5962 and 5976 facilities is discharged.

Evaporation of the saline waste waters of these facilities takes place principally in the summer months since the ponds freeze in the winter. The net evaporation averaged over the year apparently requires an acre of pond surface for each 2,000 to 4,000 gal/day (equivalent to 19,000 to 37,000 l/day per hectare) based on present performance. Ponds forced to operate at rates close to 47,000 liters per day per hectare (5,000 gal/day per acre) are not adequate for this location.

Effluent

There is no discharge from facility 5999.

Process waste water is discharged only at the 5933 facility, and plans are under way to eliminate this.

Facility 5976 only mines ore and discharges only mine water. The facility 5962 discharge is only ground and runoff waters. The waste constituents after treatment of the discharge at 5933 were at the time of permit application:

	mg/l	kg/day (lb/day)	
total solids	9,000	860	(1,900)
dissolved solids	8,300	793	(1,750)
suspended solids	700	67	(150)

SODIUM SULFATE (SALT CAKE)

Sodium sulfate (salt cake) is produced from natural sources in three different geographical areas by three different processing methods because of differences in the ores or brines utilized. Salt cake is also recovered as a by-product of numerous inorganic chemical industry processes. The three mining processes are:

(a) Recovery from Great Salt Lake brines as part of a step-wise evaporation process. Sodium chloride and potassium sulfate are recovered as co-products. This process was discussed in Salines from Brine Lakes.
(b) Recovery from Searles Lake brines as part of an involved evaporative series of processes which generate 13 products. This process was also discussed in Salines from Brine Lakes.
(c) Recovery from West Texas brines by a selective crystallization process.

Sodium Sulfate from Brine Wells

There are two facilities in this subcategory.

Process Description

Sodium sulfate natural brines are pumped from wells, settled to remove suspended muds and then saturated with salt (NaCl). The brine mixtures are cooled to effect precipitation of sodium sulfate. The precipitated solids are recovered by filtration and the spent brine is fed to an evaporation pond as a waste. The recovered solids are melted, calcined to effect dehydration, cooled and packaged. A process flowsheet is shown in Figure 23.

Raw Waste Load

The process wastes consist of brine impurities, salt and brine muds. These are listed as follows:

waste	process source	kg/kkg (lb/1000 lb)
sodium chloride	purification	430
sodium sulfate	purification	112.5
magnesium chloride	purification	700
muds	brine settling	not given not given

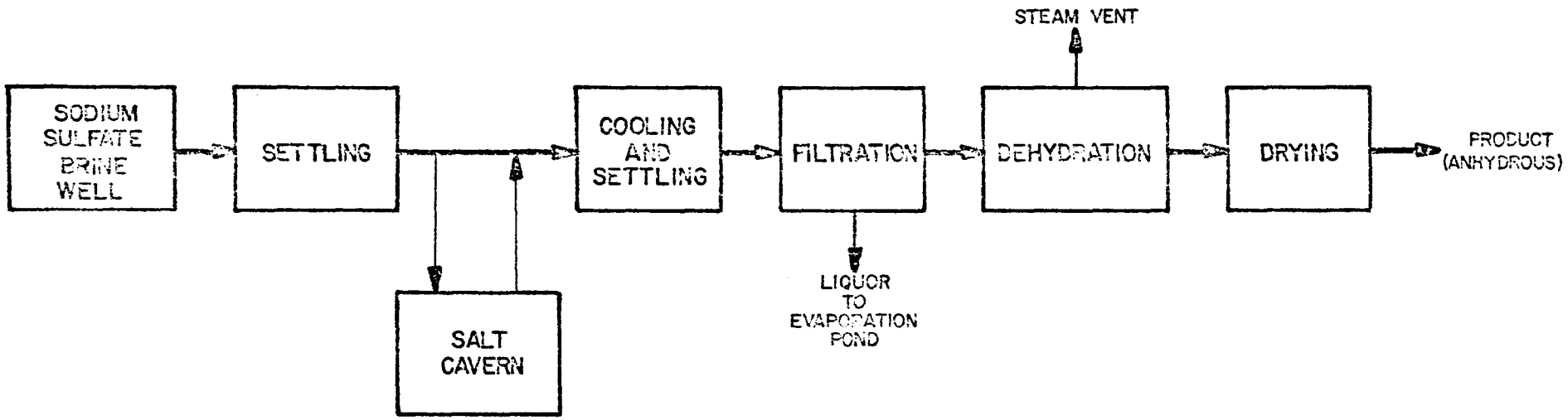

FIGURE 23
SODIUM SULFATE FROM BRINE WELLS

Water Use

Facility water use consists entirely of the brine employed. The details are given below.

Water intake

type	l/day (gal/day)	l/kkg (gal/ton)
brine	819,000 (216,000)	9,029 (2,160)

All of this brine goes to the process and thence to waste with no recycle.

Treatment

All waste waters are fed to on-site evaporation ponds.

Effluent

There are no discharges due to total evaporation at the arid locations involved.

Great Salt Lake Operations

This operation recovers salt (NaCl), potash (K_2SO_4), and salt cake (Na_2SO_4) from Great Salt Lake brines. This was discussed in Salines from Brine Lakes.

Searles Lake Operations

There are two facilities at Searles Lake in California which process a unique brine to recover sodium sulfate in addition to a number of other products. These operations were discussed in Salines from Brine Lakes.

ROCK SALT (SIC 1476)

There are approximately 21 producers of rock salt in the United States. Eleven facilities were visited representing over 90 percent of the salt production. The operations and the type of waste generated are similar for the entire industry. The sources of waste and the methods of disposition vary from facility to facility. This study covers those establishments engaged in mining, crushing and screening rock salt.

Process Description

The salt is mined from a salt dome or horizontal beds at various depths by conventional room and pillar methods. The face of the material is undercut, drilled and blasted and the broken salt passed through a multiple stage crushing and screening circuit. The products normally 1" and smaller are hoisted to the surface for further screening and sizing and preparation for shipment. The extent of the final crushing and screening carried out on the surface varies and in some cases practically all is done underground. See Figure 24 for a typical process flow diagram.

Raw Waste Loads

The waste water from these salt facilities consists primarily of a salt solution of varying sodium chloride content and comes from one or more of the following sources:

(1) Wet dust collection in the screening and sizing steps,

(2) Washdown of miscellaneous spills in the operating area and dissolving of the non-salable fines,

(3) Mine seepage.

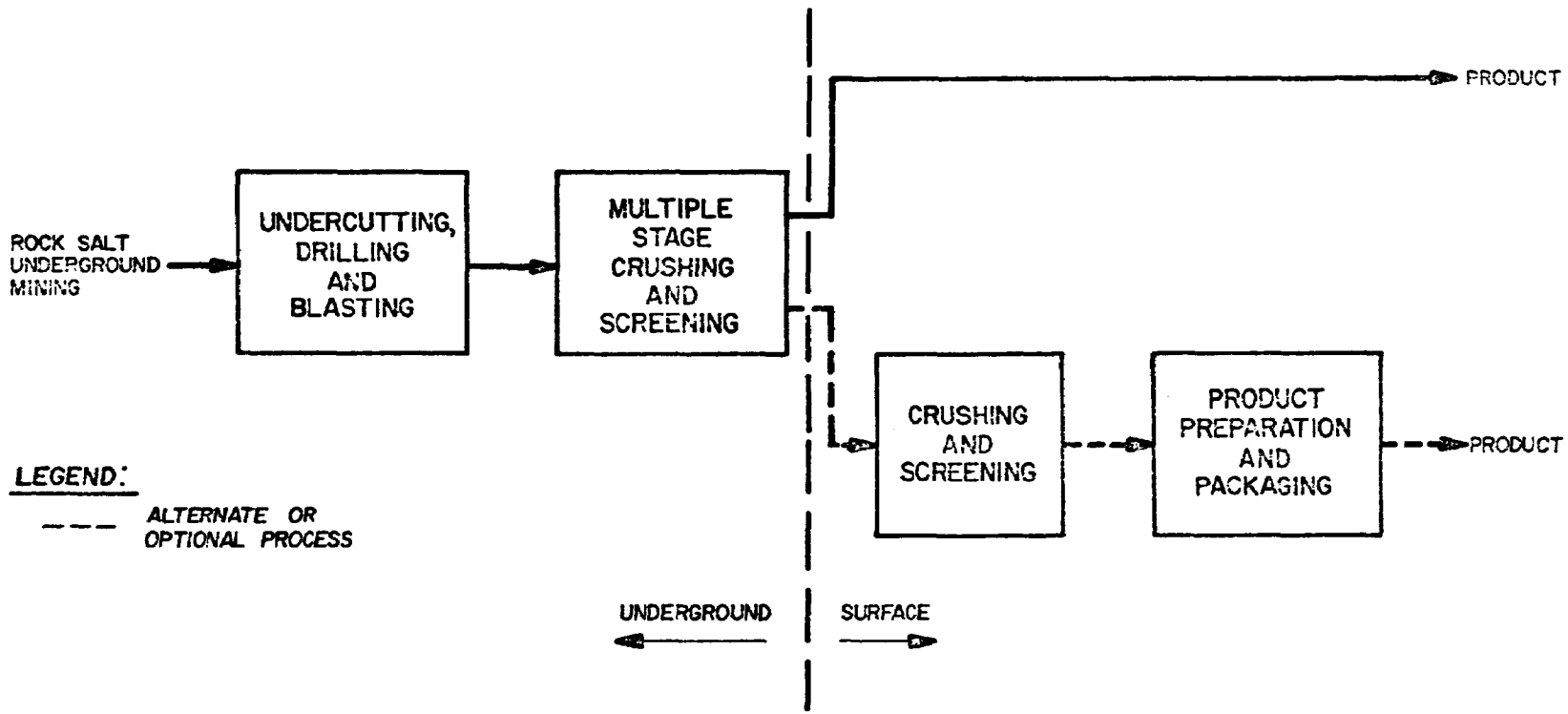

FIGURE 24
ROCK SALT MINING AND PROCESSING

The waste streams associated with the various facilities are as follows:

Facility	Waste stream Type or Source	Volume l/day (mgd)	Treatment
4010	none (no surface operations)	none	none
4013	washdown from screening operations	4,100,000 (1.1)	none
4026	mine shaft seepage	150,000 (0.04)	none
4027	dust collector washdown	500,000 (0.13)	none
4028	a) shaft seepage, washdown & cooling water.	60,000 (0.02)	none
	b) shaft seepage	33,000 (0.009)	filtration & chemical treatment
4032	shaft seepage	4,000 (0.001)	none
4033	a) shaft seepage	27,000 (0.007)	none
	b) surface drainage from waste storage	25,000 (0.007)	none
	c) general surface drainage	25,000 (0.007)	none
4034	a) shaft seepage	520,000 (0.14)	none
	b) brine pond, (surface drainage)	310,000 (0.08)	none
	c) process water	10,000 (0.003)	none
4035	shaft seepage	insignificant	none
4038	none	none	none

Water Use

In the mining and processing of rock salt, water consumption is variable due to the miscellaneous nature of its use. Routine use is for cooling, boilers (heating) and sanitation with a small volume consumed in the process for dissolving anti-caking reagents. Variable volumes are used in dust collection and washdown of waste salt including non-salable fines from the operating areas. The following lists the volume of intake water per unit of production for some of the mining, crushing and screening facilities:

Facility	Intake Water l/kkg of product (gal/ton)	Source
4013	1285 (310)	waterway (91%) wells.
4026	22 (5)	municipal
4027	122 (30)	Lake (90%) municipal
4028	38 (9)	municipal
4034	11 (3)	municipal

Waste Water Treatment

Generally there is no treatment of the miscellaneous saline waste water associated with the mining, crushing and sizing of rock salt. Some of the facilities have settling ponds. Facility 4028 is unique in that the mine shaft passes through an impure brine aquifer and entraps hydrogen sulfide gas. The seepage from this brine stream around the shaft is contained by entrapment rings. The solution is filtered, chemically treated and re-injected into a well to the aquifer.

Effluents

The effluents from these facilities consist primarily of waste water from the dust collectors, miscellaneous washdown of operating areas, and mine seepage. The compositions of some of the facility effluents expressed in mg/l are as follows:

Parameter	4013	4026	4027
Volume (gal/day)	1,080,000	40,000	132,000
TDS	4,660	30,900	not available
Na	1,840	7,200	not available
Cl	2,820	15,700	18,000
TSS	trace*	72	150
SO_4	trace	1,400	370
pH	----	7.5	6.5

Parameter	4033	4034	
		001	002B
Volume (gal/day)	20,200	81,000	138,000
TDS	30,200	53,000-112,000	319,000-323,000
Na	11,900	not available	not available
Cl	18,500	32,000-69,000	182,000-191,000
TSS	trace**	470-4,050	1,870-4,750
SO_4	----	208	260
pH	----	8.5-9.0	7.6

* due to dilution
** runoff only, remainder of waste re-injected to well.

The suspended solids content in the process water discharges from facilities 4013, 4026, and 4027 range up to 0.02 kg/kkg of product. At least one of these facilities discharges an average of as little as 0.002 kg/kkg of product.

PHOSPHATE ROCK (SIC 1475)

Phosphate ore mining and processing is carried out in four different regions of the United States. These areas and their contribution to the total output are as follows:

(a) Florida 78%

(b) Western states 12%

(c) North Carolina 5%

(d) Tennessee 5%

Eighteen to twenty different companies with about 25 to 30 operations account for greater than 95 percent of the output. Data collected through in-facility visits to most of the operating facilities is analyzed in this section.

Phosphate ore is mined using various surface mining methods and the extent of processing is dependent upon the characteristics of the ore which is related to a particular geographic area. The different phases of processing may be classified as follows:

(a) mining

(b) mining - slimes separation

(c) mining - slimes separation - flotation

Eighty-three percent of the industry processes the ore through flotation. The major wastes associated with phosphate production are the slimes and flotation tailings which consist primarily of clays and sands. These are separated from the phosphate rock through various processing techniques such as grinding, screening, crushing, classification, and finally, desliming or a combination of desliming and flotation. This type of waste is common to all processing facilities although it may differ in physical characteristics. Settling ponds are the method of treatment used with variations in percent of process water recycled and discharged effluent from pond overflow. The method of processing does merit subcategorization in that economics can preclude the extensive use of recycled water in flotation processing.

PROCESSES - EASTERN

The Florida, North Carolina, and Tennessee producers of phosphate rock contribute about 88 percent of the total U.S. production. The major operations in these geographical

areas were visited which represented 15 companies and 21 operating areas. All of these facilities have intermittent or continuous discharge.

Process Description

A typical process description is presented along with comments on those that are significantly different.

The ore which lies at varying depths from the surface is mined from open pits by use of draglines and dumped into a pit adjacent to the mining cut. The material is slurried with the use of high pressure streams of water from hydraulically operated guns and pumped to the beneficiation facility where it enters the washer section. This section separates the pebble phosphate rock from the slurry which is accomplished by a series of screening, scrubbing and washing operations. The coarse fraction termed pebble is transferred to product storage and the fine phosphatic material is collected and pumped to surge bins for further processing.

The next step in the process is the removal by cyclones of the -150 mesh fraction referred to as slimes, colloidal clays and very fine sands, which are pumped to settling ponds. The oversize material is transferred to the flotation section, where it is conditioned for the first stage flotation. The floated material may be stored "as is" or de-oiled, conditioned and directed to a second stage flotation. The phosphate rock product is dried and stored. The tailings (sands) from the flotation steps are discharged as a slurry to mined out areas for land reclamation.

Facilities 4006, 4008 and 4025, located in a specific geographical area, do not include the flotation step. The processing is complete after the washing and desliming stages, and, in some cases, a final filtering of the product. The locations of the mines are usually some distance from the beneficiation facility and the ore is brought in dry, as mined, by truck or rail.

Facility 4003 in another area of the United States differs in processing from the general description in the first part of the mill operation. The ore feed slurry is passed through a multiple stage screening step separating the -14 mesh for flotation and the oversize is discarded. The mine operation is unique in that the ore lies some 30 m (100 ft) below the surface. To maintain a dry pit, it is necessary to de-pressurize an underlying high yield artesian aquifer. This is accomplished through use of a series of deep well pumps surrounding the pit that removes sufficient water to offset the incoming flow refilling the zone.

See Figure 25 for the process flow diagram of Eastern operations.

Raw Waste Loads

The waste streams associated with this category of phosphate rock production along with their source and disposition are as follows:

Waste	Source	Disposition
Primary Slimes (3 to 5% solids)	Desliming cyclones	Settling ponds
Secondary Slimes	holding tanks, secondary desliming	Settling ponds
Sand Tailings (20 to 30% solids)	Flotation Cells	Mined out areas for land reclamation
Mine Pit Seepage	Mine	An intermittent and indeterminate volume discharged to a slimes or tailings waste stream
Dust scrubber slurry	Dryers	Discharged to waste streams

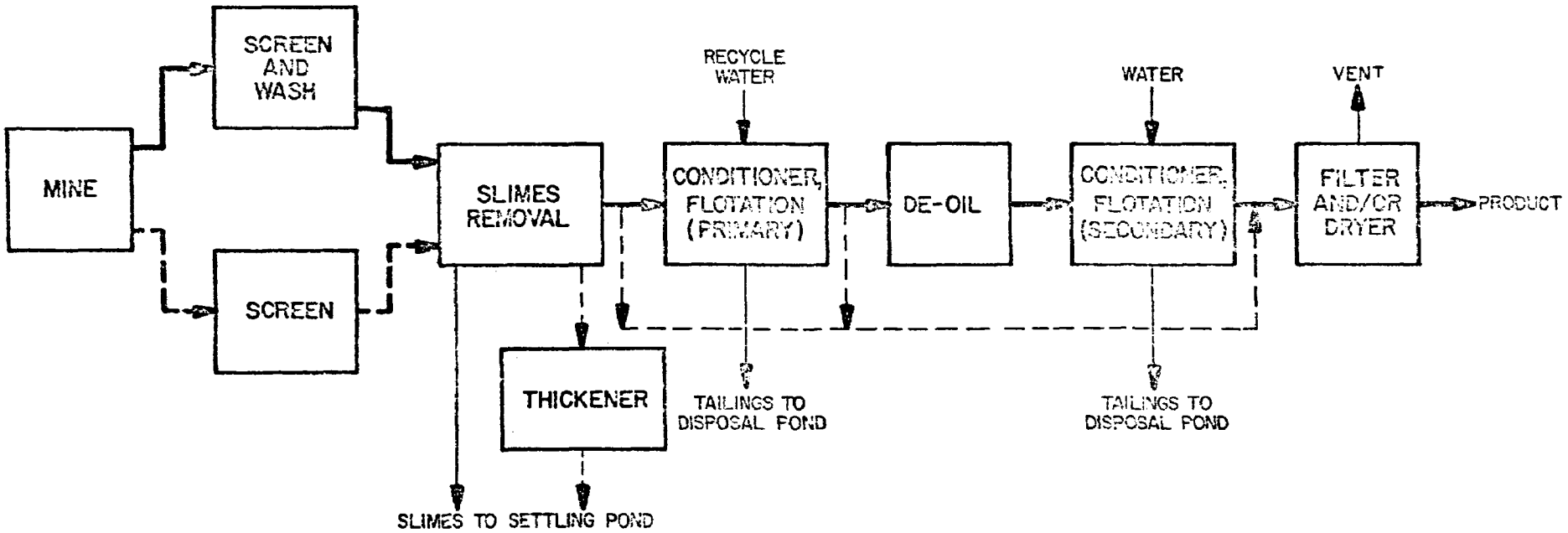

FIGURE 25
PHOSPHATE MINING AND PROCESSING
EASTERN

The wastes associated with the various facilities and their quantities follow:

	kg/kkg (lb/1000 lb) of product			
Facility	Slimes	Tailings	Mine Pit Seepage	Dust Scrubber Slurry
4002	790	1380	yes	no
4003	370	840	yes	yes
4004a	information not available		yes	yes
4004b	information not available		yes	no
4005a	1180	900	yes	yes
4005b	1160	1290	yes	no
4006	1000	no	runoff only	no
4007	no (a mine only)		runoff only	no
4008	580	no	runoff only	no
4005c	1050	1520	yes	yes
4015	1000	1000	yes	yes
4016	1300	1300	yes	yes
4017	860	2440	yes	yes
4018				
4019a	770	2140	yes	yes
4019b	900	2610	yes	yes
4019c	1290	2100	yes	yes
4020a	1030	1230	yes	yes
4020b	1330	1570	yes	yes
4025	1010	no	runoff only	no

In addition to the slimes and tailings, facility 4003 disposes of about 120 kg/kkg product as solid waste from the initial stage of beneficiation.

Water Use

Almost all water used in the beneficiation of phosphate ore is for processing purposes. Only minimal volumes are used for non-contact cooling and sanitary purposes.

A typical usage is in the range of 41,000 l/kkg (10,000 gal/ton) of product with a considerable variation occurring within the various facilities. The wide range of water usage may be attributed to the following reasons:

(1) Operating procedures and practices

(2) Weight recovery (product/ton of ore)

(3) Percent of ore feed processed through flotation

(4) Ore characteristics

(5) Facility layout and/or equipment design

A comparison of water usage in the various facilities is as follows:

Facility	10^6 l/day	(mgd)	l/kkg (gal/ton) of product	Percent Recycle
4002	248.1	(65.5)	25,800 (6200)	85
4003	411.4	(108.7)	45,300 (10,900)	60
4004a	205.9	(54.4)	Not Available	74
4004b	121.9	(32.2)	Not Available	74
4005a	246.5	(65.0)	18,100 (4300)	95
4005b	107.7	(28.5)	14,200 (3400)	95
4005c	370.9	(98)	30,600 (7300)	95
4006	3.6	(0.96)	20,400 (4,900)	0
4007	none		none (mine only)	N/A
4008	76.3	(20.2)	18,400 (4,400)	66
4015	313.0	(82.7)	45,500 (10,900)	90
4016	182.1	(48.1)	31,800 (7600)	84
4017	726.4	(191.9)	91,400 (21,900)	90
4018	358.2	(94.6)	66,600 (15,900)	N/A
4019a	355.0	(93.8)	64,300 (15,400)	N/A
4019b	573.8	(151.6)	78,000 (18,700)	N/A
4019c	255.9	(67.6)	81,100 (19,400)	N/A
4020a	257.4	(68)	21,300 (5,100)	80
4020b	174.1	(46)	32,200 (7,700)	85
4025	24.5	(6.5)	25,500 (6,100)	80

The sources of the process water consist primarily of recycle (from ponds) with additional makeup coming from wells and natural streams. Generally no additional treatment of the water is carried out prior to use.

Some facilities use well water for pump seal water (>2000 gpm) claiming that this is necessary in order to protect the seals. Others, facility 4015 for example, use recycled slime pond water with no problems. Some facilities also claim that well water is necessary for air scrubbers on dryers in order to prevent nozzle plugging and utilize the cooler temperature of the well water to increase scrubber efficiency. Other facilities also recycle this with no apparent difficulty. Facility 4018 recycles this water through a small pond that treats no other wastes.

Waste Treatment

The treatment of the process waste streams consists of gravity settling through an extensive use of ponds. The slimes which are common to all phosphate ore beneficiation processes, although differing in characteristics, are the major waste problem with respect to disposition. The slimes at 3-5 percent solids either flow by gravity via open ditch with necessary lift stations or are pumped directly to the

settling ponds. The pond overflow is one of the primary sources of the recycle process water. Those facilities that include flotation discharge tailings at 20-30 percent solids to a mined out area. Settling occurs rapidly with a part or all of the water returned to recycle and the solids used in land reclamation. The pond sizes are quite large, 160 hectares (400 acres) being typical. A single process facility will have several such ponds created from mined areas. Because the slimes have such a great water content, they will occupy more space than the ore. Hence dams need to be built in order to utilize the volume over the ponds that is above ground level. Because of past slime pond dam breaks, the constructyion of these dams is rigorously overseen in the state of Florida. The treatment of the mine pit seepage and dust scrubber slurries are handled similarly to the other waste streams. Facility 4003 discharges some of the mine pit pumpout.

Effluents

Effluents are intermittently or continuously discharged from one or more settling areas by all of the beneficiation facilities. Volumes of effluents are related to: (1) % recycle; (2) total and frequency of rainfall; (3) surface runoff; and, (4) available settling pond acreage. The pH of the effluents from these facilities range from 6.2 to 9.1 with over 70 percent of the averages between 7 and 8.

The effluents from these facilities typically include not only excess water from the process recycle system, but also various amounts of incidental water. The data from 18 of these facilities is given below in ascending order of relative volume of discharge:

facility	total discharge l/kkg (gal/ton)	total amounts, kg/kkg of product (lb/1000 lb) suspended solids	phosphate as P	fluoride
4002	335 (80)	0.003	0.0006	0.0006
4003	1,102 (250)	.08	0.024	0.033
4004a	10,200 (2,440)	0.71	0.067	0.036
4004b	103,800 (24,900)	0.39	0.208	0.125
4005c	1,400 (335)	0.046	0.0007	0.0022
4005b	7,900 (1,890)	0.137	0.0103	0.016
4005a	9,990 (2,390)	0.140	0.025	0.023
4006	61,450 (14,700)	0.18	0.092	0.006
4015	9,470 (2,270)	0.65	0.032	0.020
4016	262 (63)	not known	0.0003	0.0005
4017	11,660 (2,790)	0.26	0.103	0.051
4018	12,600 (4,340)	2.68	0.212	0.034
4019b	720 (173)	0.007	0.0013	0.0012
4019a	960 (230)	0.008	0.0016	0.0017
4019c	1,680 (400)	0.016	0.018	0.0054
4020b	2,530 (610)	0.017	0.0028	0.0078
4020a	12,080 (2,900)	0.036	0.012	0.024
4025	102 (24)	est. 0.019	0.0005	not known

The above facilities are located in Florida, Tennessee and North Carolina.

The asterisked value in the preceeding table for phosphate in the discharge of facility 4019c is anomalously high due to acid regulation problems during the period of the sampling. For this reason, this data point is not comparable to those of the remainder of the facilities and hence not used further in the data analysis.

Sufficient data was available from the Florida phosphate and processing facilities to analyze statistically. Normal and logarithmic normal distributions were tested on individual daily and the monthly averages for TSS. Figure 26 plots log TSS (mg/l) versus probability for one facility. The higher TSS values fit a straight line determined by a least squares program very well. It is typically necessary to exclude some values that obviously rapidly fall off the line determined by the higher values. Furthermore the very low values should not be equally weighted with the higher values that do fit the straight line since the higher values determine the 99 percent level of confidence and the limits are indicative of the uppermost level of confidence and not the lower.

FIGURE 26

Normal Distribution of Log Tss
for a Phosphate Slime Pond Discharge

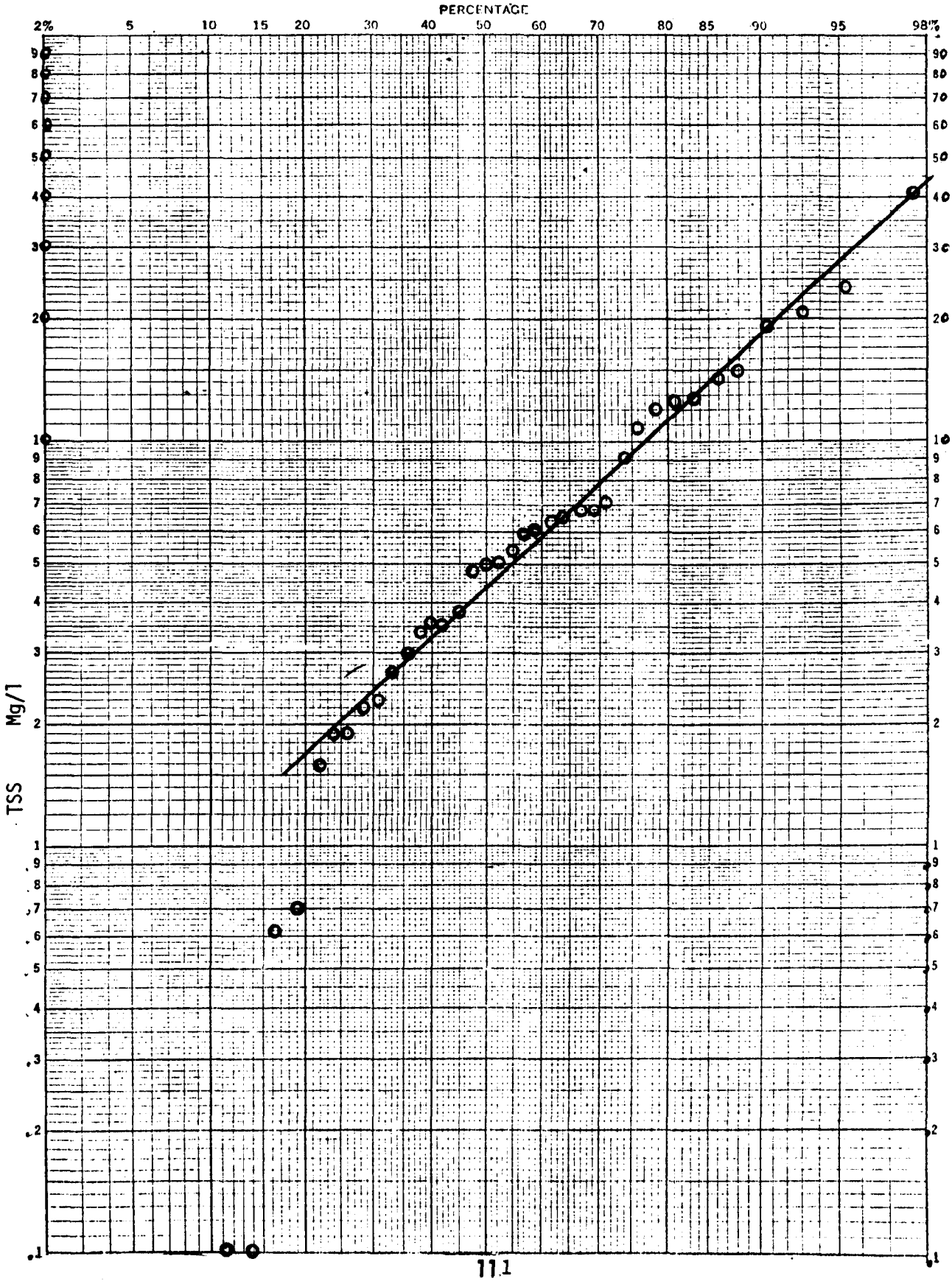

The following data summarize the results of the statistical analyses:

PHOSPHATE EFFLUENT QUALITY
TSS, mg/l

	Long Term Average	Monthly 99 Percentile	Observed Monthly Maximum	Daily 99 Percen-tile	Observed Daily Maximum
4002	9.2	30.5	26	97.5	64
4004A(1)	9.7	31.0	14	59.4	50
4004A(2)	11.3	-	-	66.7	30
4004B(1)	13.5	93.0	53	73.6	103
4004B(2)	3.5	8.8	6	18.3	12
4004B(3)	2.5	12.5	5	9.2	10
4005A	18.1	39.7	29	62.5	75
4005B(1)	18.7	31.7	25	58.8	67
4005B(2)	16.0	26.8	22	44.6	35
4005C(1)	13.2	30.6	23	54.8	47
4005C(2)	15.0	-	-	92.2	55
4005C(3)	28.2	-	-	144.1	105
4015(1)	15.8	26.3	18	35.2	36
4015(2)	46.5	300.9	109	367	181
4015(3)	14.9	-	-	23.0	20
4016	7.4	20.3	13	28.1	17
4018	158	798	453	1334	1072
4019A	7.0	20.2	13	57.3	41
4019B	5.6	32.9	18	40.3	33
4019C	6.3	53.7	17	62.4	43
4020A	2.8	22.7	5	39.0	14
4020B	5.5	7.6	6	13.7	12

Some caution must be exercised when reviewing the data. For instance some of the data noted are weekly composites and it can be expected that the daily variability will be somewhat higher. Some of the analyses, on the other hand, were performed on less than 12 data points. This was the case for some monthly data. In these cases the 99 percent level of confidence was typically never achieved.

In other cases poor sampling techniques were employed by the facilities, and some data was not analyzed because of facility admissions of improper sampling. In other cases high TSS values resulted from erosion of the earthen discharge ditch or the inclusion of untreated facility and road surface runoff.

In addition to TSS, the slimes from beneficiation and facility effluents contain radium 226 resulting from the presence of uranium in the ores. Typical radium 226 concentrations in slimes and effluents are presented in the following table:

Radium 226 Concentrations (pCi/liter)

Facility	Slime Discharge dissolved	Slime Discharge undissolved	g/liter	Effluent Discharge discharge point	Effluent Discharge dissolved	Effluent Discharge undissolved
			*82			
4005	0.82	10.2	0.48	A-4*	0.66	0.26
				K-4*	0.52	0.28
				K-8*	0.68	0.28
			*86			
4015	4.8	1074	14.8	002*	0.02	0.56
				003*	0.34	1.1
4016	2.0	97.6	3.2	001*	2.2	0.74
4017	0.60	37.7	3.85	001	0.24	0.74

*4 hour composite sample

The concentration of total radium 226 appears to be directly related to the concentration of TSS.

PROCESSES - WESTERN

The Western producers of phosphate rock contribute about 12 percent of the total U.S. production. All of the major operations in this geographical area were visited. They represent four companies and six different operating areas. The higher net evaporation rate is the major factor responsible for making it feasible to attain no discharge.

Process Description

A description of the phosphate ore processing is presented with mention made of those facilities that are significantly different.

The bedded and inclined ore deposits lie at varying depths and are mined by open pit methods. The mining methods generally involve the use of scrapers, rippers and/or drilling and blasting. The ore is transported to the facility area by truck or rail where it enters the first stage of beneficiation which consists of crushing and/or scrubbing. Subsequent sizing is accomplished through further crushing, grinding and classification, with the sized feed being directed to the desliming section for removal of the minus 325 material. These slimes are discharged either directly to a tailings pond or through a thickener. The underflow product from the desliming step is filtered. The filtered material may be further processed through a drying and/or calcining step prior to shipment. See Figure 27 for the process flow diagram.

Facility 4022 is the only facility that includes a flotation step. After the cycloning or desliming step, the material is fed to a flotation circuit consisting of conditioning with rougher and cleaner cells. The flotation tailings are combined with slimes and thickened prior to being discharged to the settling pond.

Facilities 4024 and 4030 do not beneficiate. The ore is mined and shipped to other locations for processing.

Raw Waste Loads

The raw waste loads from this subcategory of phosphate ore processing are the slimes. In the facility (4022) having flotation, the tailings constitute a second waste stream. In the mining area of all facilities the only waste water occurring is normal surface runoff.

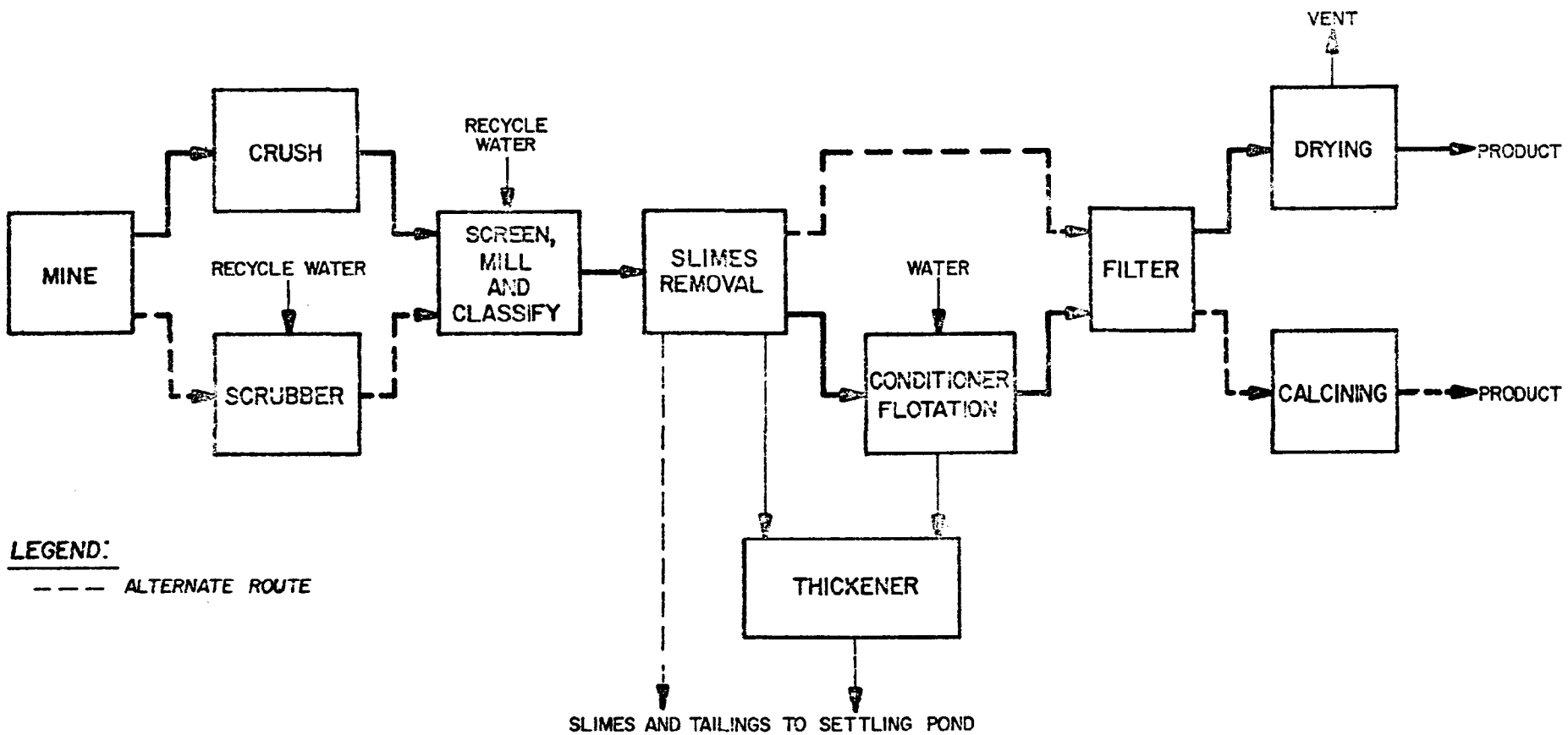

FIGURE 27
PHOSPHATE MINING AND PROCESSING
WESTERN

Facility	Waste Material	Source	kg/kkg (lb/1000 lb) of product
4022	slimes combined with tailings	desliming cyclones & flotation cells	1,700
4023	slimes	desliming cyclones	500
4029	slimes	desliming cyclones	484
4031	slimes	desliming cyclones	580

The disposition of the wastes from these facilities is to settling ponds. In the operations that have dryers and calciners, the dust from the scrubber system is discharged to the slimes waste stream.

Water Use

At all operations where ore beneficiation occurs, the process water recycle is 65 percent or greater. Most of the remaining percentage of water is tied into the settled slimes. The overflow from the settling pond is returned to the process. The water usage is almost totally for processing (>95 percent) with only a minimal volume used in other areas of the facility such as non-contact cooling and sanitary. A comparison of water usage in each facility is as follows:

Facility	l/kkg (gal/ton) Product	Percent Recycle	Makeup water Source
4022	11,200 (2,700)	66	spring & wells
4023	3,500 (830)	60	wells
4029	5,000 (1,200)	66	wells
4031	8,300 (2,000)	75	wells

Waste Water Treatment

The treatment of the process waste streams consists typically of flocculation and gravity settling with some facilities having a thickening stage prior to ponding. The

slimes consist primarily of fine clays and sands. At facility 4022, the flotation tailings (primarily sands) are combined with the slimes with treatment common to the other operations. The waste slurries vary in percent solids from 5 to 15. Generally a flocculating agent is added before pumping to a thickener or directly to a settling pond. The solids settle out rapidly and all of the pond overflow except in the case of facility 4022 is returned to the process. This facility received a discharge permit stipulating no discharge and intends to have complete recycle and/or impoundment of process water.

Effluents

Of the six facilities surveyed, only facility 4022 currently has a discharge. Some part of the overflow and seepage from the settling pond flows into a small retention basin which occasionally discharges.

There are currently thirteen known significant U.S. Frasch sulfur facilities producing molten sulfur. Two of these facilities are located in anhydrite deposits and eleven on salt domes. Two of the salt-dome facilities are offshore operations. Only one of the offshore facilities is in production. The second facility will resume operation in 1975.

All of these facilities are designed for a maximum hot water generation capacity. The sulfur-to-water ratio varies greatly from formation to formation, from location to location, and from time to time. The latter occurs because normally as a mine ages, the water to sulphur ratio increases. Therefore, the quantity of water used in this industry category is not determined solely by the quantity of product.

More than 85 percent of the sulfur delivered to domestic markets remains as a liquid, from well to customer. Liquid shipments are made in heated ships, barges, tank cars and trucks. Molten sulfur is solidified in vats prior to shipment in dry form.

ANHYDRITE OPERATIONS

Process Description

A Frasch installation starts with a borehole drilled by a conventional rotary rig to the top of cap rock. A steel casing is lowered into the borehole. Drilling is then continued into the sulfur formation. A liner, which has two sets of perforations, is set from the surface into the sulfur formation. The first set of perforations is several feet from the bottom and the second set is about five feet above the first set. A second pipe, of smaller diameter, is placed inside the liner with the lower end open and a few inches above the bottom. A ring-shaped seal is placed around the smaller pipe between the two sets of perforations to close off the circulation in the annular space of the two concentric pipes.

Incoming water is treated either by hot lime or the cold clarification process plus softening, and a portion goes to the boilers. Steam from the boilers is used to superheat the remaining water. Superheated water, under pressure and at a temperature of about 163°C (325°F), is pumped down the annular space between the two pipes, and, during the initial heating period, down through the sulfur pipe. The hot water flows through the holes at the bottom into the sulfur-bearing deposit. As the temperature rises, the

sulfur melts. Because the liquid sulfur is heavier than the water, it sinks to the bottom where it enters the lower liner perforations. Pumping water down the sulfur pipe is then discontinued. Following the direction of least pressure, the liquid sulfur moves up through the small pipe. Its upward motion is aided by the introduction of compressed air through a one-inch pipe.

After reaching the surface, the liquid sulfur is collected and pumped into steam-heated tanks or barges for direct shipment to the customer or it is transported to a shipping center.

In the start up of new and existing wells some hot water will preceed the upcoming sulfur and this water will be bled, in the case of estuary operations directly to surface waters. This is called sealing water.

In addition to producing wells, "bleed-off" wells must be drilled in appropriate locations to control dome pressure and permit continuous introduction of hot water.

At facilities located in anhydrite deposits, the "bleed-off" water is heated and reused in the system. In general, 50 percent of the process water used in these facilities is recovered. The remainder is lost in the sulfur-bearing formation. At facilities located on salt domes, the "bleed-off" water is saline because of the association of the sulfur deposits with salt domes. The bleedwater is the major waste water of these facilities. Since the water is too corrosive to reuse.

Removal of large quantities of sulfur from the formation increases the voids and cavities underground. Subsidence and resulting compaction eliminate most of these void spaces. Drilling muds are also used to fill some of the areas already mined. Some of these facilities mix the sludge generated from their water softening and treating operation with clay and use it as a substitute drilling mud. Generalized process diagrams for mines located in an anhydrite deposit and in salt domes are given in Figure 28.

Raw Waste Loads

The process raw waste consists of the sludge (primarily $CaCO_3$) which originates from the water purification operation. The raw waste loads are presented as follows:

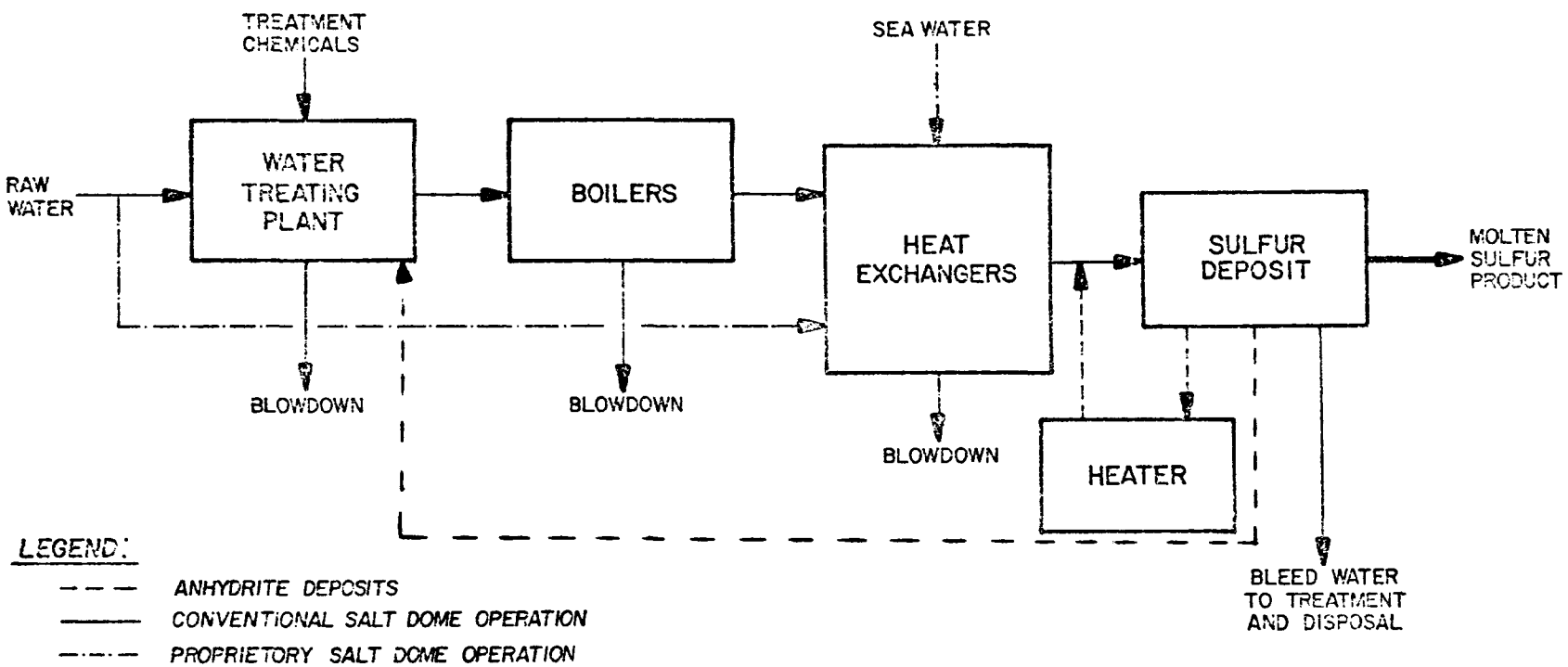

FIGURE 28

SULFUR MINING AND PROCESSING
(FRASCH PROCESS)

Waste Material at Facility	kg/kkg of product (lb/1000 lb) 2020	2095
Water softener sludge	9.6	15.3

Facility Water Use

Facility 2020 consumes water at an average of 6,970 l/kkg (1,670 gal/ton) of product, 50 percent of which is recycled back to the system and the remainder is lost in the sulfur-bearing formation. This includes about 5 liters of non-contact cooling water per kkg (1.3 gal/ton) of product used in their compressor circuit.

Facility 2095 uses on the average 8,470 l/kkg (2,030 gal/ton) of product. It recovers 40-60 percent of this water from its bleedwells. The hydraulic load of these facilities is given as follows:

Water Use at Facility	l/day (mgd) 2020	2095
process consumed	49,000,000 (13.0)	3,785,000 (1.0)
non-contact cooling	30,300 (0.008)	unknown
sanitary	62,000 (0.016)	unknown
feed to boiler & steam generators	744,000 (0.197)	unknown

Facility Waste Treatment

There are no waterborne process wastes emanating from these facilities. The only waste from these facilities is sludge which originates from the water purification operation, and it is sent to a thickener where as much water as possible is reclaimed for recycling back to the system. At facility 2020 approximately 90 percent of the thickener sludge is used as an additive to the mud that is injected into the ore body in order to improve the thermal and hydrologic efficiency of the mine. The remaining 10 percent is pumped into a settling pond for evaporation. At facility 2095, the entire thickener sludge is used as drilling mud.

Facility Effluents

There are no process water effluents out of these properties. The waste streams emanating from the boiler operations (boiler blowdowns) are addressed under general water guidelines in Section IX of this report.

SALT DOME OPERATIONS

Process Description

The process is the same as that described in Anhydrite Operations.

Raw Waste Loads

Raw wastes from these operations come from five sources:

(a) bleed water,
(b) sludge from water treating and softening operations,
(c) surface runoff,
(d) mining water used in sealing wells, and
(e) miscellaneous sanitary waste, power facility area waste, cooling water, boiler blowdown, steam traps, and drips and drains.

The bleedwater from the mines is saline and contains dissolved solids which have a high content of sulfides. Its quantity and chemical composition is independent of the sulfur production rate. The sludge from the water treating operations varies in chemical composition and quantity depending on the type of water used in the process. In some facilities, only drinking water and a small part of process water is softened and sea water constitutes the remainder of the process water. In other facilities, fresh water is used as process water and a portion of the facility water is softened by hot lime process prior to usage.

The amount of runoff is dependent upon rainfall, the moisture content of the soil, and other conditions which may not necessitate the discharge of rainwater. Information on runoff was supplied for four facilities. The runoff values given below are based on a one-inch rain and 100 percent runoff. The average yearly rainfall for these areas is estimated to be 54 inches.

The quantities of raw wastes for eight of the ten known salt dome sulfur operations are given as follows:

b. Sludge from Water Treating and Softening Operations

Facility	l/day (mgd)	pH	TSS mg/l
2021	5,300 (0.0014	10.5	54,000
2022	136,000 (0.036)	---	---
2023 (1)	---	---	---
2024	380,000 (2) (0.10)	11.0	455
2025 (3)	1,136,000 (0.30)	6.6 - 7.1	20 - 55
2026	151,000 (0.040)	7.7	20
2027 (3)	3,000,000 (0.80)	10.0	60
2028 (3)	151,000 (0.040)	7.3	16

(1) Sludges and wastes from water treating operations were included in the bleedwater waste stream.

(2) Includes boiler blowdowns.

(3) The raw waste streams in these mines are routed into earthen ponds prior to discharge. Information presented herein is the composition of the outfall from the pond. Composition of the pond influent is not known.

c. Surface Rain Runoff

Information on surface rain runoff was not available for facilities 2021 through 2024. Data for the remaining facilities based on one-inch rain and runoff are presented as follows:

Facility	l/day (mgd)	pH	TSS mg/l
2025	223,000,000 (59)	4.4 - 7.5	20 - 40
2026	68,000,000 (18)	4.7 - 6.1	90
2027	125,000,000 (33)	---	---
2028	83,000,000 (22)	5.0 - 7.1	30 - 265

d. Mining Water Used in Sealing Wells

Information on this waste stream was available for facilities 2021 and 2024. In some facilities this waste is separate from their bleedwater waste stream and in others separate from the facilities miscellaneous wastes.

Facility	2021	2024
Flow, l/day(gal/day)	5,700 (1,500)	18,900 (5,000)
pH	7.9	7.5
TSS, mg/l	62	20
Sulfide, mg/l	7.8	57.2
BOD, mg/l	3.3	8.1
COD, mg/l	219	42

The waste stream for facility 2021 includes miscellaneous treated sanitary waste, drips and drains.

e. Miscellaneous Power Facility Waste

In sulfur mines 2024, 2026, and 2027, the power facility area waste is included in the waste stream originating from the water treating and softening operation. In mine 2023, the bleedwater waste stream includes the power facility area waste stream. The flow rates and significant constituents in the power facility area waste stream for the remaining mines are given as follows:

Facility	2021	2022	2025	2028
l/day	4,600,000	57,000	1,150,000	230,000
(mgd)	(1.2)	(0.015)	(0.30)	(0.06)
pH	7.7	unknown	4.4-5.9	7.8
TSS,mg/l	56	unknown	20-40	44
Sulfide, mg/l	0.0	unknown	Nil	Nil
BOD, mg/l	0.8	unknown	3.0	2.0
COD, mg/l	150	unknown	22	50

Mine 2022 is an offshore operation and the composition of the wastes for this mine has not been determined.

Water Loads

The details of the hydraulic loads at these facilities are given below. Non-contact cooling water used in facilities 2025 through 2027 is on a 100 percent recycle basis.

a. Water Intake, l/day (mgd)

Facility	Sea Water	Water Source River	Water Source Well
2021	80,400,000 (21.2)	114,000 (0.03)	--- ---
2022	21,000,000 (5.6)	73,000 (0.019)	
2023	401,900,000 (105.9)	33,300,000 (8.8)	---
2024	---	22,400,000 (5.9)	
2025	---	29,000,000 (7.7)	18,200,000 (4.8)
2026	---	18,000,000 (4.7)	---
2027	---	30,000,000 (8.0)	---
2028	---	14,700,000 (3.9)	---

b. Water Use, l/day (gal/day)

Facility	Process consumed	Non-Contact cooling	Boiler feed	Sanitary
2021	75,900,000 (20)	4,500,000 (1.2)	38,000 (0.01)	76,000 (0.02)
2022	21,000,000 (5.6)	760 (0.0002)	53,000 (0.014)	19,000 (0.005)
2023	428,000,000 (113)	7,600 (0.002)	6,300,000 (1.6)	114,000 (0.03)
2024	18,500,000 (4.9)	760 (0.0002)	3,900,000 (1.0)	38,000 (0.01)
2025	44,000,000 (11.5)	unknown	570,000 (0.15)	570,000 (0.15)
2026	17,500,000 (4.6)	unknown	280,000 (0.073)	320,000 (0.085)
2027	22,700,000 (6.0)	unknown	1,140,000 (0.30)	---
2028	13,600,000 (3.6)	unknown	130,000 (0.035)	650,000 (0.17)

Waste Water Treatment

The major waste from the sulfur mines is the bleedwater from the formation. Due to the nature of the mining operation, it is not possible to significantly reduce the quantity of the bleedwater produced. Large aeration ponds are considered to be the best technology available for treating the water from the bleed wells. However, due to scarcity of

land space for ponds near some of these mines, each facility, with the exception of the offshore operation, uses a unique treating system to reduce the hydrogen sulfide and suspended solid concentrations in the bleedwater effluent streams. A synopsis of the treatment technique used in each mine follows.

Facility	Bleedwater Treatment Technique
2021	Flash stripping of hydrogen sulfide and mixing of partially treated bleedwater with a large volume of oxygen containing seawater.
2022	Offshore operation - no treatment.
2023	Spray aeration to reduce hydrogen sulfide concentration and then mixing of partially treated bleedwater with a large volume of oxygen containing seawater.
2024	Oxidation and settling ponds.
2025	Flue gas stripping of hydrogen sulfide and settling ponds.
2026	Oxidation and settling ponds.
2027	Chemical treatment of hydrogen sulfides with sulfurous acid and settling ponds.
2028	Oxidation and settling pond.

Details on the waste treatment techniques employed by each mine are covered below.

Mine 2021

There are four waste streams at this facility. Outfalls #1 (power facility effluent), #2 (sludge from the domestic water treating facility), and #5 (water from sealing wells, miscellaneous sanitary waste and drips and drains) are disposed of in a seawater bay leading into the Gulf without any treatment. Outfall #3 (bleedwater) is first flashed into a large open top tank which causes reduction in hydrogen sulfide concentrations. After a short residence in the tank, this effluent is mixed with seawater to effect further oxidation of the hydrogen sulfides to sulfates and to dilute it before discharge.

A flash stripping and oxidation system was chosen for this facility primarily because of a new procedure of up-flank

bleeding which precluded the continued use of the existing treatment reservoir.

Mine 2022

The location of this mine, some 9.6 to 11.2 km (6 to 7 miles) offshore in the Gulf, does not lend itself to the conventional aeration reservoir. Mechanical aeration systems are considered undesirable by this company due to the large quantities of gaseous hydrogen sulfide that would be released to the atmosphere and come in contact with personnel.

Presently, no treatment is given to the effluents discharged into the sea. Some quantities of dissolved hydrogen sulfide are swept out of the solution through gaseous evolution of carbon dioxide and methane present in the formation water. Additionally, a complete oxidation of sulfides occurs through the reaction with the dissolved oxygen in the seawater, and results of water sampling, since the mine began operations, have shown an absence of sulfides within 150 m (500 ft) of the discharge points.

Mine 2023

Presently, there is only one major waste stream at this facility. However, there are 6 other discharge points from this facility primarily for rainwater runoffs. This mine has three pumping stations in the field for rain water runoffs which are newly designated discharge points. In addition, there are 3 discharge points installed to cover rainwater runoffs and the drips and drains from the levee system around the power facility. This levee system has been built to improve the housekeeping in the power facility area.

The bleedwater from the mine is aerated in one of three small reservoirs, located in the field area, prior to pumping to the main treatment reservoir which is about 10 hectares (25 acres) in size. Here the water is sprayed to reduce hydrogen sulfide concentrations. It is then impounded for 3-4 days where further aeration occurs. Finally, it is mixed with pumped-in seawater at a ratio of 20 to 1 in a 1830 m. (6000-foot), man-made canal to oxidize any remaining sulfides to sulfates prior to discharge. Power facility wastes are also piped into the canal where temperatures are equilibrated and solids are settled. Oxidation is effecting sulfide removal in this ditch rather than just dilution as evidenced by the avearage reduction of sulfide from 107 mg/l to less than 0.1 mg/l before and after mixing with the seawater.

A spray system was chosen for aeration in this facility due to the lack of suitable land space for the construction of a large conventional reservoir.

Mine 2024

Four discharge streams emanate from this facility. Discharges #1 and #3, the power facility discharges and mining water from sealing wells, respectively, discharged into a river without any treatment. Discharge #2, the bleedwater, flows by gravity through a ditch into a 50 hectares (125 acres) reservoir where oxidation of hydrogen sulfide is accomplished. The effluent residence time in this reservoir is about 15 to 18 days. The treated bleedwater flows into a swift flowing tributary of a river just before it enters tidal waters.

All sewage effluents entering into discharge #4, which is primarily rain runoff, are treated through a septic tank system prior to discharge.

Mine 2025

The bleedwater flows to a small settling basin from where it is routed through a mixing zone. Sulfurous acid and deposition inhibitor are added to the bleedwater in this mixing zone and then the waste water is routed to packed towers for hydrogen sulfide removal. In the packed towers, the bleedwater flows counter current to cooled boiler flue gas. The treated bleedwater is next aerated and sent to a 10 hectares (25 acres) settling basin. The overflow from the settling basin flows through two 10-12 hectares (25 to 30 acres) each clarification ponds, prior to discharge into the tidal section of a river through a 35 km (22 mile) long disposal canal.

The effluents from the water softening and treating operations are discharged into an earthen pond to settle the solids and the sludge. The supernatant water from this pond is discharged into a river. The solids are mixed with some clay and used as substitute drilling mud. Rainfall runoffs, boiler blowdown and other facility area wastes are discharged without treatment. The sanitary waste is treated in a septic tank system and then discharged into oxidation ponds. The overflows from these ponds are discharged into a river.

Mine 2026

In this mine, the bleedwater is treated in a series of three ponds for settling and oxidation. Pond #1 is about 14 hectares (35 acres) and ponds #2 and #3 are about

52 hectares (130 acres), each, in size. The overflow from pond #1 flows through a 3.2 km (2 mile) ditch into pond #2. The overflow from the third pond is discharged into a river.

Part of the rainfall runoff, a small part of the boiler blowdown (the continuous blowdown is returned to the mine water system), zeolite softener regeneration water, pump gland water, and washwater are sent into a nearby lake without treatment. The blowdown from the hot process softening system and clarifier system is discharged to pits where the excess supernatant is discharged with the remaining rainfall runoffs into the creek. The settled solids are used as drilling mud.

The sanitary waste of this mine is treated in a septic tank system and reused in the mine water system.

Mine 2027

The bleedwater treatment process used consists of contacting the waste water from the bleedwells with sulfurous acid with provisions for adequate mixing followed with sufficient retention time. Sulfurous acid is made both by burning liquid sulfur or from hydrogen sulfide originating from the bleedwater. In this process, the soluble sulfides in the bleedwater are converted to elemental sulfur and oxidized sulfur products in a series of reaction vessels. The excess acid is next neutralized with lime and the insoluble sulfur is removed by sedimentation. The effluent thus treated passes through five basins in series having a total retention capacity of about one day. The overflow from the last basin is discharged into a salt water canal which flows into the tidal section of a river.

The waste stream from the water clarification operation is discharged into an earthen pond to settle the solids and the sludge. The supernatant water from this pond is mixed with boiler blowdown waste and other water treating facility area waste streams prior to discharge into the salt water canal.

Rainfall runoffs are sent into the canal without any treatment. The sanitary waste of this mine is treated in a septic tank system and then discharged into a disposal field.

Mine 2028

In this mine, the water from the bleedwells is sent into two separate tanks from where it flows through 24 km (15 miles) of underground piping into a ditch about 5 km (3 miles) in length. From there it flows into a 325 hectare (800 acres) pond for oxidation and settling. Treated effluent from this

pond is discharged 60 days per year into a ditch. This is because the canal water, while subject to tidal influence, is selectively used for irrigation supply water.

The waste stream from the water clarifier and zeolite softening operation is discharged into an earthen pond to settle the solids and the sludge. The supernatant water from this pond is intermittently pumped out into a creek. The solids are mixed with some clay and used as drilling mud.

Boiler blowdown water, facility area wastes and rainfall runoffs are sent into a nearby creek. The sanitary waste of this mine is treated in a septic tank system and then discharged in a disposal field.

Effluent Composition

As indicated in the waste treatment section, the rainfall runoffs, boiler blowdowns, waste resulting from the water softening and treating operations, facility area wastes are sent into receiving waterways without any treatment. Therefore, the composition of these streams are as given in the raw waste load section. The composition of the bleedwater effluent from mine 2022 has not been determined since a federal discharge permit was not required for offshore operations until 1974. Table 5 compares the discharges from these facilities.

TABLE 5

COMPARISON OF DISCHARGES

Plant	2021	2023	2024	2025	2026	2027	2028	2029	2097
Age	14	41	21	45	26	22	17	28	6
Location	La *	La *	La	Tx	Tx	Tx	Tx	Tx	Tx
Total Discharge, 10^6 l/day	74	428	19	38	17	23	11.5	8.7	11.5
Total Discharge 10^3 l/kkg	180	260	6.9	12.1	20	20.5	21.5	11.8	22.1
Bleedwater discharge, 10^6 l/day	4.6	27	19	38	17	23	11.5	8.7	11.5
Bleedwater discharge, 10^3 l/kkg	11.2	16.4	6.9	12.1	20	20.5	21.5	11.8	22.1
Pollutants (in total discharge)									
TSS, mg/l	57	33	95	30	20	5	40	50	30
TSS, kg/kkg	10.3	8.6	0.7	0.4	0.4	0.1	0.9	0.6	0.7
Sulfide, mg/ l	16	0.4	51	nil	nil	nil	nil	not de-	2
Sulfide, kg/kkg	2.9	0.1	0.4	nil	nil	nil	nil	tected	0.04
TSS (seawater contribution omitted) kg/kkg	4.8	0.3	0.7	0.4	0.4	0.1	0.9	0.6	0.7

* Bayou

MINERAL PIGMENTS (IRON OXIDES) (SIC 1479)

The category "mineral pigments" might be more directly classified as "iron oxide pigments" as they are the only natural pigment mining and processing operations found. The quantity of natural iron oxide pigments sold by processors in the United States in 1972 was just under 63,500 kkg (70,000 tons).

One minor processor and two processors of natural iron oxide pigments were contacted. These three companies account for approximately 20 percent of the total U.S. production.

Process Description

Iron oxide pigments are mined in open pits using power shovels or other earth removing equipment. At some locations these materials are a minor by-product of iron ore mined primarily for the production of iron and steel. Some overburden may be removed in mining.

Two processes are used, depending on the source and purity of the ore. For relatively pure ores, processing consists simply of crushing and grinding followed by air classification. A drying step can be included (facility 3019). Facility 3022 and facility 3100 are dry operations. Alternatively, for the less pure ores, a washing step designed to remove sand and gravel, followed by dewatering and drying is used (facility 3022). Solid wastes and facility effluent waters may be generated in this latter process. These processes are shown in Figure 29.

Raw Waste Loads

Water is not used in mining of iron oxides. Pit water, if it collects, is dumped to the ground or goes to a sump in the pit until the pit undergoes relcamation. Overburden is used for fill, as are any other mining waste solids. In the wet processing of iron pigments, the rake thickener overflow is discharged to a settling pond, and the underflow, which is wet oxide, is fed to a drum dryer (facility 3022).

Water Use

In the wet processing of iron oxide for pigment, approximately 27,800 l/kkg product of water (6670 gallons/ton) is used (facility 3022). This process water is obtained from a large settling pond with no additional treatment. Approximately 95 percent of this water (26,400 l/kkg of product or 6,330 gal/ton) overflows from the rake thickener, and drains to the settling pond, while

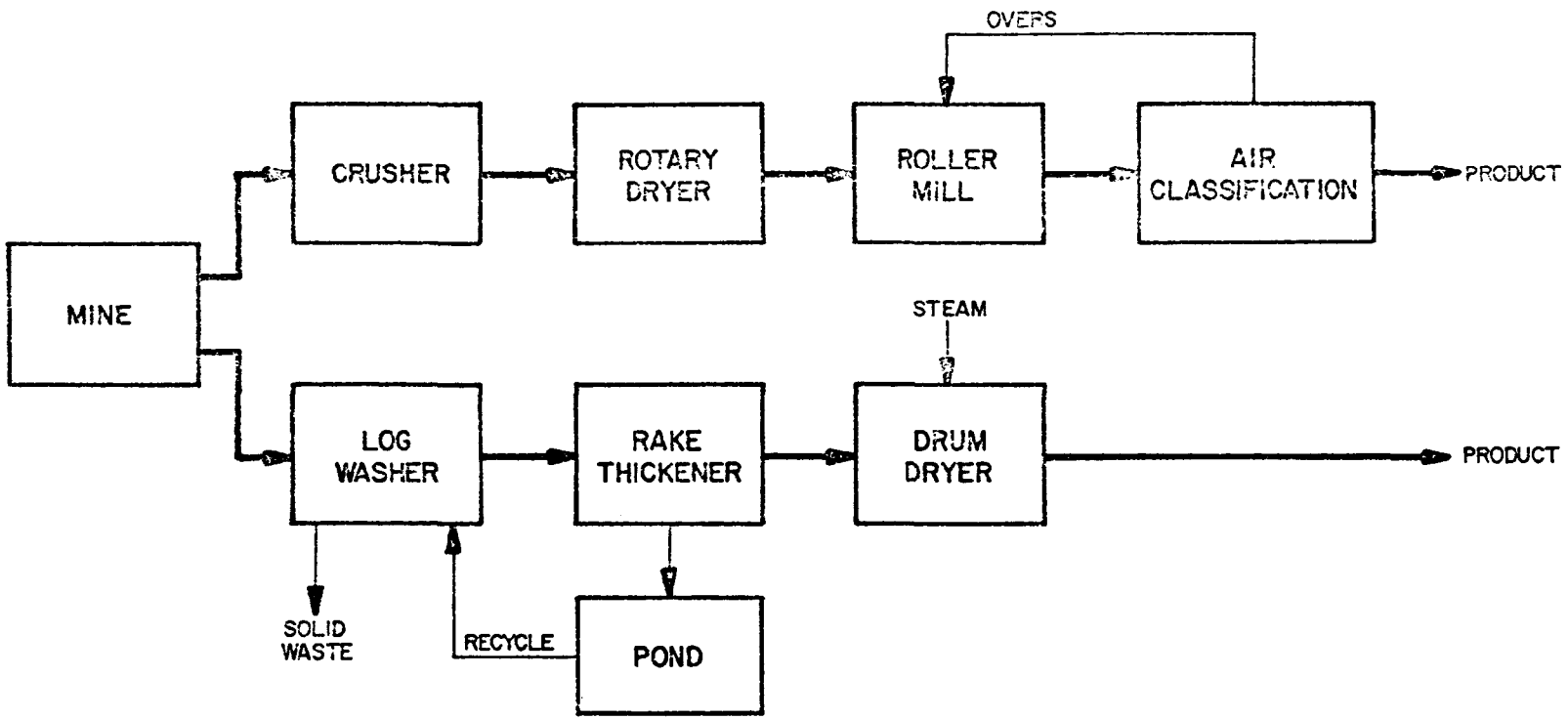

FIGURE 29
MINERAL PIGMENT MINING AND PROCESSING

the remaining 5 percent (1,400 l/kkg or about 340 gal/ton) is evaporated on the drum dryer.

Waste Water Treatment

In the wet processing of iron oxide pigments, water overflow from the rake thickener drains to a large settling pond. It is then recycled to the process with no further treatment.

Effluents and Disposal

Solid waste at the mine are used as fill for land reclamation purposes. Solid wastes (sand and gravel) are obtained from the log washer. At facility 3022, these wastes are sold. No significant amounts of solid wastes are obtained from the dry process (facility 3019).

At facility 3022 the waste water is discharged to a 41 hectare (100 acres) settling pond which is also used for effluent from a barite operation. The discharge from the large pond is mainly attributable to the barite operations.

LITHIUM MINERALS (SIC 1479)

There are two producers of lithium minerals, excluding brine operations, and both sources are from spodumene which is separated from pegmatite ores through the process of flotation. The method of concentrating the spodumene and the handling of the waste generated are very similar for both facilities.

Process Description

The spodumene ore is produced from an open pit using conventional methods of mining. The ore is sized for flotation by passing through a multiple stage crushing system and then to a wet grinding mill in closed circuit with a classification unit. The excess fines in the ground ore, the major waste component, are separated through the use of cyclones and discharged to a settling pond. The coarse fraction is conditioned through the addition of various reagents and pumped to the flotation circuit where the spodumene concentrate is produced. This primary product, dependent upon the end use, is either filtered or dried. The tailings from the spodumene flotation circuit which consists primarily of feldspar, mica and quartz are either discharged to the slimes-tailings pond or further processed into salable secondary products and/or solid waste. The secondary processing consists of flotation, classification and desliming. The waste generated in this phase of the operation is handled similarly to those in the earlier steps of the process. A generalized diagram for the mining and processing of spodumene is given in Figure 30.

Reagents used in these facilities are: fatty acids; amines; hydrofluoric acid; sulfuric acid; and sodium hydroxide and other anionic collectors. The flocculants used for waste settling are alum and anionic-cationic polymers.

Raw Waste Loads

The two waste streams common to both facilities are the slimes-tailings from the flotation process and the mine pumpout. The volume of waste from the process being discharged as a slurry to the settling pond or stored as dry solids is directly related to the quantity of secondary products recovered. An additional waste stream which is unique to facility 4009 arises from the scrubbing circuit of the low iron process which removes certain impurities from a portion of the spodumene concentrate product. Information on the wastes from each facility is as follows:

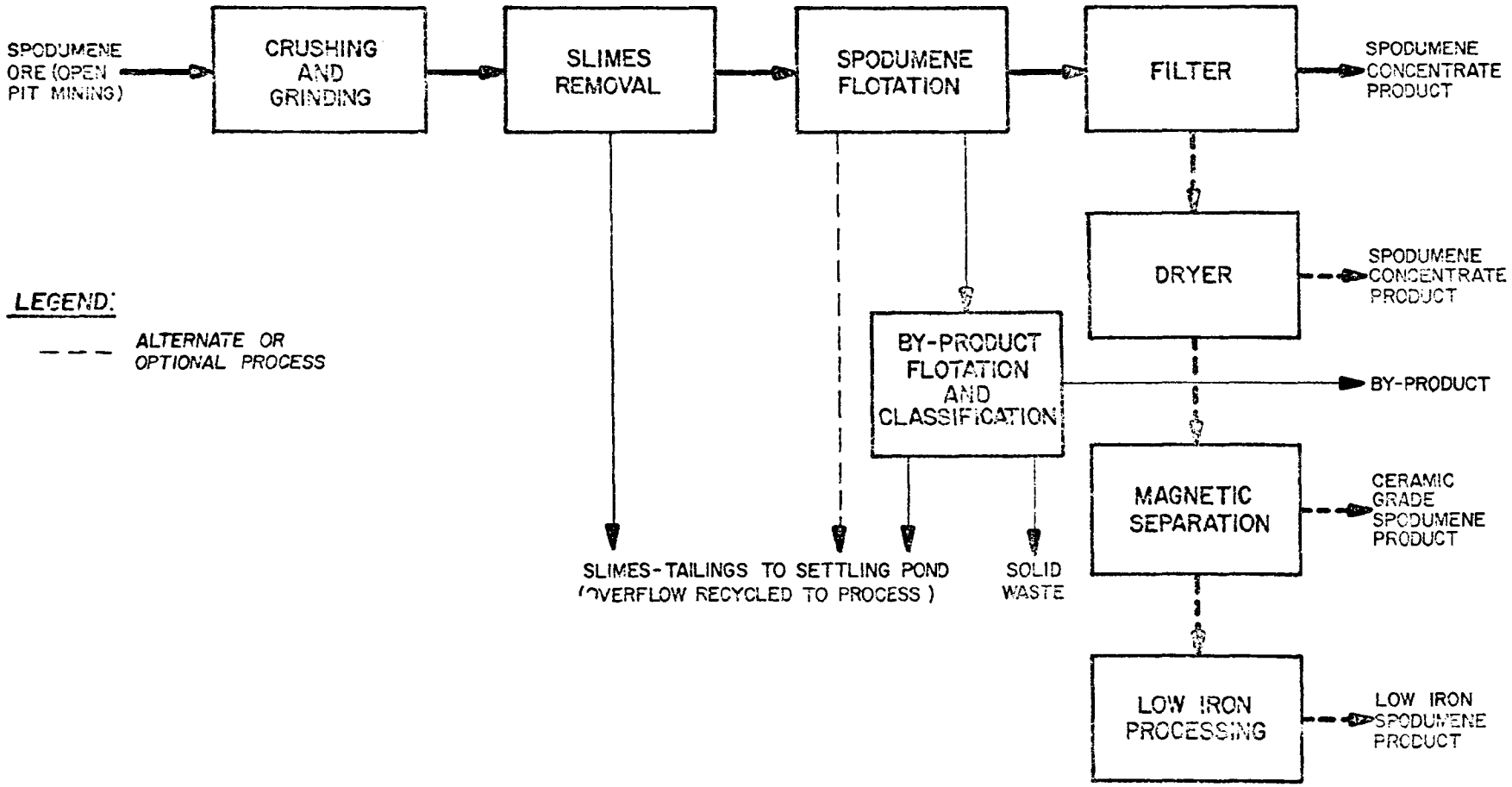

FIGURE 30
SPODUMENE MINING AND PROCESSING
(FLOTATION PROCESS)

Facility 4001

Waste Material	Source	kg/kkg of feed (lbs/1000 lb)
Slimes	flotation	100
Tailings	dewatering	unknown
Mine water	mine pit	(intermittent, unknown)

Facility 4009

Waste Material	Source	kg/kkg of feed (lbs/1000 lb)
Slimes & tailings	flotation	620
Mine water	mine pit	568,000 l/day (0.15 mgd) est.
Scrubber slurry	Low iron process	95,000 l/day (0.025 mgd) est.

Water Use

At both facilities the process water recycle is 90 percent or greater. With the exception of the above mentioned scrubber slurry, the process waters are discharged to a settling pond where a major part of the overflow is returned for re-use. A breakdown of water use at each facility follows.

Facility 4001

1. Water Usage

	l/kkg of ore (gal/ton)	Water Source	Recycle
Process	12,500 (3,000)	a) Settling pond overflow b) Mine pumpout c) Well	95
Non-contact cooling	250 (60)	Well	100
Total	12,750 (3,060)		

2. Water Recycled 12,100 (2,900)

Facility 4009

1. Water Usage

	l/kkg of ore (gal/ton)	Water Source	Recycle
Process	26,900 (6,450)	a) Settling pond overflow b) Creek	90
Non-contact cooling	1) 380 (90)	a) Settling pond overflow b) Creek	90
	2) 270 (60)	Municipal	0
Boiler	40 (10)		
Sanitary	190 (50)	Municipal	0
Total	27,780 (6,660)		

2. Water Recycled 24,600 (5,900)

Waste Water Treatment

The treatment of the process waste streams consists of flocculation and gravity settling. The slimes and flotation tailings consists primarily of alkali aluminum silicates and quartz. The separation of these wastes is made at different points in the process. A flocculating agent is added and the slurry is pumped to settling ponds. The solids settle out and the major part of the overflow is returned to the facility for re-use. The mine water which is pumped intermittently is both discharged and recycled to the process water circuit. An additional waste stream which is unique to facility 4009 arises from the scrubbing circuit of the low-iron process which removes certain impurities from the spodumene concentrate product. This stream is currently being impounded for future treatment prior to being discharged into the existing facility effluent stream.

Effluents

Each facility has a single effluent stream. These discharges consist primarily of the settling pond overflow along with minor contributions from the mine pump-out and miscellaneous surface runoff. For facility 4009 the point of measurement of the discharge also encompasses some flow from two streams which pass through the property and serve as an intake water source to the facility. Measurements of these parameters in effluent and intake are as follows:

	Facility 4001 Discharge	Facility 4009 Intake mg/l	Facility 4009 Discharge mg/l
Flow-l/day (mgd)	830,000 (0.22)	--	7,900,000 (2.1)
BOD	6	1.2	1.6
TDS		261 (216-288)	515 (461-593)
TSS		7.5	14
Phosphorus (as P)	0.05	0.08 (0.05-0.15)	0.32 (0.14-0.53)
Chloride		5.8	28
Sulfate (as S)		66	63
Aluminum		1.8	4.2
Iron		0.08 (0.05-0.12)	0.6 (0.15-1.1)
Manganese		0.10 (0.03-0.20)	1.7 (0.4-3.4)
Silicon		8.4	14.6
Sodium		9	29
Potassium		4.9	6.0
Fluoride	0.7	0.53 (0.20-0.72)	2.2 (1.8-2.7)
Lithium		0.28 (0.11-0.46)	6.3 (4.1-8.4)
pH		7.5-8.0	7.0-7.5

The variations in the parameters listed above are primarily a result of changes in ore composition with resulting process adjustment.

SECTION VI

SELECTION OF POLLUTANT PARAMETERS

INTRODUCTION

The waste water constituents of pollution significance for this segment of the mineral mining and processing industry are based upon those parameters which have been identified in the untreated wastes from each subcategory of this study. The waste water constituents are further divided into those that have been selected as pollutants of significance with the rationale for their selection, and those that are not deemed significant with the rationale for their rejection.

The basis for selection of the significant pollutant parameters was:

(1) toxicity to terrestrial and aquatic organisms;
(2) substances causing dissolved oxygen depletion in streams;
(3) soluble consitutents that result in undesirable tastes and odors in water supplies;
(4) substances that result in eutrophication and stimulate undesirable algae growth;
(5) substances that produce unsightly conditions in receiving water; and
(6) substances that result in sludge deposits in streams.

SIGNIFICANCE AND RATIONALE FOR SELECTION OF POLLUTION PARAMETERS

Biochemical Oxygen Demand (BOD)

Biochemical oxygen demand (BOD) is a measure of the oxygen consuming capacilities of organic matter. The BOD does not in itself cause direct harm to a water system, but it does exert an indirect effect by depressing the oxygen content of the water. Sewage and other organic effluents during their processes of decomposition exert a BOD, which can have a catastrophic effect on the ecosystem by depleting the oxygen supply. Conditions are reached frequently where all of the oxygen is used and the continuing decay process causes the production of noxious gases such as hydrogen sulfide and methane. Water with a high BOD indicates the presence of decomposing organic matter and subsequent high bacterial counts that degrade its quality and potential uses.

Dissolved oxygen (DO) is a water quality constituent that, in appropriate concentrations, is essential not only to keep organisms living but also to sustain species reproduction, vigor, and the development of populations. Organisms undergo stress at reduced DO concentrations that make them less competitive and able to sustain their species within the aquatic environment. For example, reduced DO concentrations have been shown to interfere with fish population through delayed hatching of eggs, reduced size and vigor of embryos, production of deformities in young, interference with food digestion, acceleration of blood clotting, decreased tolerance to certain toxicants, reduced food efficiency and growth rate, and reduced maximum sustained swimming speed. Fish food organisms are likewise affected adversely in conditions with suppressed DO. Since all aerobic aquatic organisms need a certain amount of oxygen, the consequences of total lack of dissolved oxygen due to a high BOD can kill all inhabitants of the area.

If a high BOD is present, the quality of the water is usually visually degraded by the presence of decomposing materials and algae blooms due to the uptake of degraded materials that form the foodstuffs of the algal populations. BOD was not a major contribution to pollution in this industry and is therefore not limited.

Fluorides

As the most reactive non-metal, fluorine is never found free in nature but as a constituent of fluorite or fluorspar, calcium fluoride, in sedimentary rocks and also of cryolite, sodium aluminum fluoride, in igneous rocks. Owing to their origin only in certain types of rocks and only in a few regions, fluorides in high concentrations are not a common constituent of natural surface waters, but they may occur in detrimental concentrations in ground waters.

Fluorides are used as insecticides, for disinfecting brewery apparatus, as a flux in the manufacture of steel, for preserving wood and mucilages, for the manufacture of glass and enamels, in chemical industries, for water treatment, and for other uses. Fluorides in sufficient quantity are toxic to humans, with doses of 250 to 450 mg giving severe symptoms or causing death.

There are numerous articles describing the effects of fluoride-bearing waters on dental enamel of children; these studies lead to the generalization that water containing less than 0.9 to 1.0 mg/l of fluoride will seldom cause mottled enamel in children, and for adults, concentrations less than 3 or 4 mg/l are not likely to cause endemic cumulative fluorosis and skeletal effects. Abundant

literature is also available describing the advantages of maintaining 0.8 to 1.5 mg/l of fluoride ion in drinking water to aid in the reduction of dental decay, especially among children.

Chronic fluoride poisoning of livestock has been observed in areas where water contained 10 to 15 mg/l fluoride. Concentrations of 30-50 mg/l of fluoride in the total ration of dairy cows is considered the upper safe limit. Fluoride from waters apparently does not accumulate in soft tissue to a significant degree and it is transferred to a very small extent into the milk and to a somewhat greater degree into eggs. Data for fresh water indicate that fluorides are toxic to fish at concentrations higher than 1.5 mg/l. Fluoride is found in the fluorspar, phosphate and lithium subcategories.

Acidity and Alkalinity

Acidity and alkalinity are reciprocal terms. Acidity is produced by substances that yield hydrogen ions upon hydrolysis and alkalinity is produced by substances that yield hydroxyl ions. The terms "total acidity" and "total alkalinity" are often used to express the buffering capacity of a solution. Acidity in natural waters is caused by carbon dioxide, mineral acids, weakly dissociated acids, and the salts of strong acids and weak bases. Alkalinity is caused by strong bases and the salts of strong alkalies and weak acids.

The term pH is a logarithmic expression of the concentration of hydrogen ions. At a pH of 7, the hydrogen and hydroxyl ion concentrations are essentially equal and the water is neutral. Lower pH values indicate acidity while higher values indicate alkalinity. The relationship between pH and acidity and alkalinity is not necessarily linear or direct.

Waters with a pH below 6.0 are corrosive to water works structures, distribution lines, and household plumbing fixtures and can thus add such constituents to drinking water as iron, copper, zinc, cadmium and lead. The hydrogen ion concentration can affect the "taste" of the water. At a low pH, water tastes "sour". The bactericidal effect of chlorine is weakened as the pH increases, and it is advantageous to keep the pH close to 7. This is very significant for providing safe drinking water.

Extremes of pH or rapid pH changes can exert stress conditions or kill aquatic life outright. Dead fish, associated algal blooms, and foul stenches are aesthetic liabilities of any waterway. Even moderate changes from "acceptable" criteria limits of pH are deleterious to some

species. The relative toxicity to aquatic life of many materials is increased by changes in the water pH. Metalocyanide complexes can increase a thousandfold in toxicity with a drop of 1.5 pH units. The availability of many nutrient substances varies with the alkalinity and acidity. Ammonia is more lethal with a higher pH.

The lacrimal fluid of the human eye has a pH of approximately 7.0 and a deviation of 0.1 pH unit from the norm may result in eye irritation for the swimmer. Appreciable irritation will cause severe pain.

Total Suspended Solids

Suspended solids include both organic and inorganic materials. The inorganic components include sand, silt, and clay. The organic fraction includes such materials as grease, oil, tar, animal and vegetable fats, various fibers, sawdust, hair and various materials from sewers. These solids may settle out rapidly and bottom deposits are often a mixture of both organic and inorganic solids. They adversely affect fisheries by covering the bottom of the stream or lake with a blanket of material that destroys the fish-food bottom fauna or the spawning ground of fish. Deposits containing organic materials may deplete bottom oxygen supplies and produce hydrogen sulfide, carbon dioxide, methane, and other noxious gases.

In raw water sources for domestic use, state and regional agencies generally specify that suspended solids in streams shall not be present in sufficient concentration to be objectionable or to interfere with normal treatment processes. Suspended solids in water may interfere with many industrial processes, and cause foaming in boilers, or encrustations on equipment exposed to water, especially as the temperature rises. Suspended solids are undesirable in water for textile industries; paper and pulp; beverages; dairy products; laundries; dyeing; photography; cooling systems, and power facilities. Suspended particles also serve as a transport mechanism for pesticides and other substances which are readily sorbed into or onto clay particles.

Solids may be suspended in water for a time, and then settle to the bed of the stream or lake. These settleable solids discharged with man's wastes may be inert, slowly biodegradable materials, or rapidly decomposable substances. While in suspension, they increase the turbidity of the water, reduce light penetration and impair the photosynthetic activity of aquatic facilities.

Solids in suspension are aesthetically displeasing. When they settle to form sludge deposits on the stream or lake bed, they are often much more damaging to the life in water, and they retain the capacity to displease the senses. Solids, when transformed to sludge deposits, may do a variety of damaging things, including blanketing the stream or lake bed and thereby destroying the living spaces for those benthic organisms that would otherwise occupy the habitat. When of an organic and therefore decomposable nature, solids use a portion or all of the dissolved oxygen available in the area. Organic materials also serve as a seemingly inexhaustible food source for sludgeworms and associated organisms.

Turbidity is principally a measure of the light absorbing properties of suspended solids. It is frequently used as a substitute method of quickly estimating the total suspended solids when the concentration is relatively low. Total suspended solids are the single most important pollutant parameter found in this segment of the mineral mining and processing industry.

Sulfides

Sulfides may be present in significant amounts in the wastewater from the manufacture of rock salt and sulfur facilities. Concentrations in the range of 1.0 to 25.0 mg/l of sulfides may be lethal in 1 to 3 days to a variety of fresh water fish.

Phosphates

Phosphates, reported as total phosphorus (P), contributes to eutrophication in receiving bodies of water.

Radiation and Radioactivity

Exposure to ionizing radiation at levels substantially above that of general background levels can be harmful to living organisms. Such exposure may cause adverse somatic effects such as cancer and life shortening as well as genetic damage. At environmental levels that may result from releases by industries processing materials containing natural radionuclides, the existence of such adverse effects has not been verified. Nevertheless, it is generally agreed that the prudent public health policy is to assume a non-threshold health effect response to radiation exposure. Furthermore, a linear response curve is generally assumed which enables the statistical estimate of risk from observed values at higher exposures to radiation through to zero exposure.

The half-life of the particular radionuclides released to the environment by an industry is extremely important in determining the significance of such releases. Once released to the biosphere, radionuclides with long half-lives can persist for hundreds and thousands of years. This fact coupled with their possible buildup in the environment can lead to their being a source of potential population exposure for many hundreds of years. Therefore, in order to minimize the potential impact of these radionuclides, they must be excluded from the biosphere as much as possible.

Facilities and animals that incorporate radioactivity through the biological cycle can pose a health hazard to man thorugh the food chain. Facilities and animals, to be of significance in the cycling of radionuclides in the aquatic enviornment must assimilate the radionuclide, retain it, be eaten by another organism, and be digestible. However, even if an organism is not eaten before it dies, the radionuclide will remain in the biosphere continuing as a potential source of exposure.

Aquatic life may assimilate radionuclides from materials present in the water, sediment, and biota. Humans can assimilate radioactivity through many different pathways. Among them are drinking contaminated water, and eating fish and shellfish that have radionuclides incorporated in them. Where fish or other fresh or maring products that may accumulate radioactive materials are used as food by humans, the concentrations of the radionuclides in the water must be restricted to provide assurance that the total intake of radionuclides from all sources will not exceed recommended levels.

Radium 226

Radium 226 is a member of the uranium decay series. It has a half-life of 1620 years. This radionuclidese is naturally present in soils throughout the United States in concentrations ranging from 0.15 to 2.8 picocuries per gram. It is also naturally present in ground waters and surface streams in varying concentrations. Radium 226 is present in minerals in the earth's crust. Generally, minerals contain varying concentrations of radium 226 and its decay products depending upon geological methods of deposition and leaching action over the years. The human body may incorporate radium in bone tissue in lieu of calcium. Some facilities and animals concentrate radium which can significantly impact the food chain.

As a result of its long half-life, radium 226 which was present in minerals extracted from the earth may persist in the biosphere for many years after introduction through

effluents or wastes. Therefore, because of its radiological consequences, concentrations of this radionuclide need to be restricted to minimize potential exposure to humans. Concentrations of this radionuclide need to be restricted to minimize the opportunity to cause exposure to humans.

SIGNIFICANCE AND RATIONALE FOR REJECTION OF POLLUTION PARAMETERS

A number of pollution parameters besides those selected were considered, but had to be rejected for one or several of the following reasons:

(1) insufficient data on facility effluents;
(2) not usually present in quantities sufficient to cause water quality degradation;
(3) treatment does not "practicably" reduce the parameter; and
(4) simultaneous reduction is achieved with another parameter which is limited.

Toxic Materials

Although arsenic, antimony, barium, boron, cadmium, chromium, copper, cyanide ion, mercury, nickel, lead, selenium, and tin are harmful pollutants, they were not found to be present in quantities sufficient to cause water quality degradation.

Dissolved Solids

The cations Al^{+3}, Ca^{+2}, K^{+} and Na^{+}, the anion Cl^{-} and the radical groups CO_3^{-2}, NO_3^{-}, NO_2^{-}, phosphates, and silicates are commonly found in all natural water bodies. Process water, mine water and storm runoff will accumulate quantities of the above constituents both in the form of suspended and dissolved solids. Limiting suspended solids and dissolved solids, where they pose a problem, is a more practicable approach to limiting these ions.

SECTION VII

CONTROL AND TREATMENT TECHNOLOGY

INTRODUCTION

The mining and processing of minerals for the chemical and fertilizer industries differ from the other segments of the mineral mining industry in that their waterborne wastes contain a wider variety of suspended solids (calcium fluorides, phosphates, sulfur, sand, clay, and rock particles) and dissolved solids (fluorides, sulfides, thiosulfates, sulfites, phosphates, metal salts, acids, alkalies, and organics).

Treatment technologies are available for reducing or removing both suspended and undesired dissolved solids. However, their use may be restricted by space requirements, economics, or geographic location.

PROBLEM POLLUTANTS

Four significant waste water problem areas have been found in these industries:

(1) Mine water drainage containing acid, heavy metals, fluorides and phosphates occurs more frequently in this segment of the mineral mining industry.

(2) The waste water from the fluorspar industry contains soluble fluoride in addition to suspended solids.

(3) Phosphate ore beneficiation produces extraordinarily large quantities of slimes that have exceptionally high water retention.

(4) Sulfur production from on-shore salt quantities of bleedwater brine containing up to 1,000 mg/l of sulfides. Both sulfides and brine content cause treatment and/or disposal problems for the sulfur industry.

Brief discussions of each of these problem areas are given below.

Mine Water Drainage

Mine drainage is encountered in a number of the chemical and fertilizer mineral mining operations. The amount and composition of mine water drainage differs for each category. Most mines have only a small amount of drainage which can be handled with little or no treatment. There are, however, a number of exceptions:

(1) Phosphate mines where the ore lies below the water table. In this case the water table may be lowered by massive pumping which drains the mine and the surrounding area. Alternatives include either mining below the water level or draining the mine by direct pumping.

(2) Salt mines often have seepage and drainage problems. The methods of handling this drainage include pumping the water to the surface with subsequent treatment and disposal, to pumping the drainage directly to a nearby aquifer.

(3) Fluorspar mine drainage varies over a large range. The quality of this water in terms of suspended solids and dissolved fluoride is usually better than waste water from associated beneficiating facilities.

(4) Barite mines usually have small amounts of mine drainage. At least one mine, however, has a large drainage flow of acidic water containing dissolved heavy metal salts. Mine water treatment is a major problem for this operation.

Phosphate Slimes

Phosphate ore contains three major components: sand, fine particles of mud or slime, and product phosphate rock. The sand tailings are readily disposed as a slurry pumped to settling areas where they settle rapidly and compactly. The mud or slime component settles more slowly and does not form compact solids. Currently, the only treatment and disposal technology for these wastes is the settling pond. Ponds serve not only as settling areas, but also as impoundments for settled material. Due to a high level of water retention by the slimes, large volume ponds are necessary in this industry. Also, in order to prevent discharge of hazardous materials in the slimes, extensive use of dikes and dams is necessary. This treatment technology presents problems for land reclamation.

CONTROL PRACTICES

Control practices such as selection of raw materials, good housekeeping, minimizing leaks and spills, in-process changes, and segregation of process waste water streams are of limited importance in the chemical and fertilizer minerals industries. Raw materials are fixed by the composition of the ore available; good housekeeping and small leaks and spills have little influence on the waste loads; and it is rare that any non-contact water, such as cooling water, is involved in these processes.

There are a number of areas, however, where control is very important. These include:

(1) waste water containment

(2) separation and control of mine water, process water, and rain water

(3) monitoring of waste streams.

Containment

The majority of waste water treatment and control facilities in the chemical and fertilizer minerals industry use one or more settling ponds. Often the word "pond" is a euphemism for swamp, gully, or other low spot which will collect water. In times of heavy rainfall these "ponds" often flood and the settled solids may be swept out. In many other cases, the identity of the pond may be maintained during rainfall but its function as a settling pond is significantly impaired by the large amount of water flowing through it. In addition to rainfall and flooding conditions, waste containment in ponds can be troubled with seepage through the ground around and beneath the pond, escape through pot holes, faults and fissures below the water surface and physical failure of pond dams and dikes. A good example of the necessity for reliable containment has been previously mentioned for phosphate slimes.

In most instances satisfactory pond performance can be achieved by proper design. In instances where preliminary laboratory tests indicate that insufficient land is available to achieve satisfactory suspended solids removal alternative treatment methods can be utilized: thickeners, clarifiers, tube and lamella separators, filters, hydrocyclones, and centrifuges.

Separation and Control of Waste Water

In these industries waste water may be separated into three different classifications:

(1) Mine drainage water. Since mineral mining operations often involve large surface areas, the rain water that falls on the mine or mine property surface constitutes a major portion of the overall waste water load leaving the property. This runoff entrains minerals, silt, sand, clay, organic matter and other suspended solids.

(2) Process water. This is water involved in transporting, classifying, washing, beneficiating, and separating ores and other mined materials. When present in minerals mining operations this water usually contains heavy loads of suspended solids and possibly some dissolved materials.

The relative amounts and compositions of the above waste water streams differ from one mining category to another and the separation, control and treatment techniques differ for each.

Process water and mine drainage are normally controlled and contained by pumping or gravity flow through pipes, channels, ditches and ponds. Rain water runoff, on the other hand, is often uncontrolled and may join process and mine drainage water.

Control technology, as discussed in this report, includes techniques and practices employed before, during, and after the actual mining or processing operation to reduce or eliminate adverse environmental effects resulting from the discharge of mine or process facility waste water. Effective pollution-control planning can reduce pollutant contributions from active mining and processing sites and can also minimize post-operational pollution potential. Because pollution potential may not cease with closure of a mine or process facility, control measures also refer to methods practiced after an operation has terminated production of ore or concentrated product. The presence of pits, storage areas for spoil (non-ore material, or waste), tailing ponds, disturbed areas, and other results or effects of mining or processing operations necessitates integrated plans for reclamation, stabilization, and control to return the affected areas to a condition at least fully capable of supporting the uses which it was capable of supporting prior to any mining and to achieve a stability not posing any threat of water diminution, or pollution and to minimize potential hazards associated with closed operations.

Mining Techniques

Mining techniques can effectively reduce amounts of pollutants coming from a mine area by containment within the mine area or by reducing their formation. These techniques can be combined with careful reclamation planning and implementation to provide maximum at-source pollution control.

Several techniques have been implemented to reduce environmental degradation during strip-mining operations. Utilization of the box-cut technique in moderate- and shallow-slope contour mining has increased recently because more stringent environmental controls are being implemented.

A box cut is simply a contour strip mine in which a low-wall barrier is maintained. Spoil may be piled on the low wall side. This technique significantly reduces the amount of water discharged from a pit area, since that water is prevented from seeping through spoil banks. The problems of preventing slides, spoil erosion, and resulting stream sedimentation are still present, however.

Block-cut mining was developed to facilitate regrading, minimize overburden handling, and contain spoil within mining areas. In block-cut mining, contour stripping is typically accomplished by throwing spoil from the bench onto downslope areas. This downslope material can slump or rapidly erode and must be moved upslope to the mine site if contour regrading is desired. The land area affected by contour strip mining is substantially larger than the area from which the ores are extracted. When using block-cut mining, only material from the first cut is deposited in adjacent low areas. Remaining spoil is then placed in mined portions of the bench. Spoil handling is restricted to the actual pit area for all areas but the first cut, which significantly reduces the area disturbed.

Pollution-control technology in underground mining is largely restricted to at-source methods of reducing water influx into mine workings. Infiltration from strata surrounding the workings is the primary source of water, and this water reacts with air and sulfide minerals within the mines to create acid pH conditions and, thus, to increase the potential for solubilization of metals. Underground mines are, therefore, faced with problems of water handling and mine-drainage treatment. Open-pit mines, on the other hand, receive both direct rainfall and runoff contributions, as well as infiltrated water from intercepted strata.

Infiltration in underground mines generally results from rainfall recharge of a ground-water reservoir. Rock

fracture zones, joints, and faults have a strong influence on ground-water flow patterns since they can collect and convey large volumes of water. These zones and faults can intersect any portion of an underground mine and permit easy access of ground water. In some mines, infiltration can result in huge volumes of water that must be handled and treated. Pumping can be a major part of the mining operation in terms of equipment and expense--particularly, in mines which do not discharge by gravity.

Water-infiltration control techniques, designed to reduce the amount of water entering the workings, are extremely important in underground mines located in or adjacent to water-bearing strata. These techniques are often employed in such mines to decrease the volume of water requiring handling and treatment, to make the mine workable, and to control energy costs associated with dewatering. The techniques include pressure grouting of fissures which are entry points for water into the mine. New polymer-based grouting materials have been developed which should improve the effectiveness of such grouting procedures. In severe cases, pilot holes can be drilled ahead of actual mining areas to determine if excessive water is likely to be encountered. When water is encountered, a small pilot hole can be easily filled by pressure grouting, and mining activity may be directed toward non-water-contributing areas in the formation. The feasibility of such control is a function of the structure of the ore body, the type of surrounding rock, and the characteristics of ground water in the area.

Decreased water volume, however, does not necessarily mean that waste water pollutant loading will also decrease. In underground mines, oxygen, in the presence of humidity, interacts with minerals on the mine walls and floor to permit pollutant formation e.g., acid mine water, while water flowing through the mine transports pollutants to the outside. If the volume of this water is decreased but the volume of pollutants remains unchanged, the resultant smaller discharge will contain increased pollutant concentrations, but approximately the same pollutant load. Rapid pumpout of the mine can, however, reduce the contact time and significantly reduce the formation of pollutants.

Reduction of mine discharge volume can reduce water handling costs. In cases of acid mine drainage, for example, the same amounts of neutralizing agents will be required because pollutant loads will remain unchanged. The volume of mine water to be treated, however, will be reduced significantly, together with the size of the necessary treatment and settling facilities. This cost reduction, along with cost savings which can be attributed to decreased pumping volumes

(hence, smaller pumps, lower energy requirements, and smaller treatment facilities), makes use of water infiltration-control techniques highly desirable.

Water entering underground mines may pass vertically through the mine roof from rock formation above. These rock units may have well-developed joint systems (fractures along which no movement occurs), which tend to facilitate vertical flow. Roof collapses can also cause widespread fracturing in overlying rocks, as well as joint separation far above the mine roof. Opened joints may channel flow from overlying aquifers (water-bearing rocks), a flooded mine above, or even from the surface.

Fracturing of overlying strata is reduced by employing any or all of several methods: (1) Increasing pillar size; (2) Increasing support of the roof; (3) Limiting the number of mine entries and reducing mine entry widths; (4) Backfilling of the mined areas with waste material.

Surface mines are often responsible for collecting and conveying large quantities of surface water to adjacent or underlying underground mines. Ungraded surface mines often collect water in open pits when no surface discharge point is available. That water may subsequently enter the groundwater system and then percolate into an underground mine. The influx of water to underground mines from either active or abandoned surface mines can be significantly reduced through implementation of a well-designed reclamation plan.

The only actual underground mining technique developed specifically for pollution control is preplanned flooding. This technique is primarily one of mine design, in which a mine is planned from its inception for post-operation flooding or zero discharge. In drift mines and shallow slope or shaft mines, this is generally achieved by working the mine with the dip of the rock (inclination of the rock to the horizontal) and pumping out the water which collects in the shafts. Upon completion of mining activities, the mine is allowed to flood naturally, eliminating the possibility of acid formation caused by the contact between sulfide minerals and oxygen. Discharges, if any, from a flooded mine should contain a much lower pollutant concentration. A flooded mine may also be sealed.

Surface-Water Control

Pollution-control technology related to mining areas, ore-beneficiation facilites, and waste-disposal sites is generally designed for prevention of pollution of surface waters (i.e., streams, impoundments, and surface runoff). Prior planning for waste disposal is a prime control method.

Disposal sites should be isolated from surface flows and impoundments to prevent or minimize pollution potential. In addition, several techniques are practiced to prevent water pollution:

(1) Construction of a clay or other type of liner beneath the planned waste disposal area to prevent infiltration of surface water (precipitation) or water contained in the waste into the ground-water system.

(2) Compaction of waste material to reduce infiltration.

(3) Maintenance of uniformly sized refuse to enhance good compaction (which may require additional crushing).

(4) Construction of a clay liner over the material to minimize infiltration. This is usually succeeded by placement of topsoil and seeding to establish a vegetative cover for erosion protection and runoff control.

(5) Excavation of diversion ditches surrounding the refuse disposal site to exclude surface runoff from the area. These ditches can also be used to collect seepage from refuse piles, with subsequent treatment, if necessary.

Surface runoff in the immediate area of beneficiation facilities presents another potential pollution problem. Runoff from haul roads, areas near conveyors, and ore storage piles is a potential source of pollutant loading to nearby surface waters. Several current industry practices to control this pollution are:

(1) Construction of ditches surrounding storage areas to divert surface runoff and collect seepage that does occur.

(2) Establishment of a vegetative cover of grasses in areas of potential sheet wash and erosion to stabilize the material, to control erosion and sedimentation, and to improve the aesthetic aspects of the area.

(3) Installation of hard surfaces on haul roads, beneath conveyors, etc., with proper slopes to direct drainage to a sump. Collected waters may be pumped to an existing treatment facility for treatment.

Another potential problem associated with construction of tailing-pond treatment systems is the use of existing valleys and natural drainage areas for impoundment of mine water or process facility process waste water. The capacity of these impoundment systems frequently is not large enough to prevent high discharge flow rates--particularly, during the late winter and early spring months. The use of ditches, flumes, pipes, trench drains, and dikes will assist in preventing runoff caused by snowmelt, rainfall, or streams from entering impoundments. Very often, this runoff flow is the only factor preventing attainment of zero discharge. Diversion of natural runoff from impoundment treatment systems, or construction of these facilities in locations which do not obstruct natural drainage, is therefore, desirable.

Ditches may be constructed upslope from the impoundment to prevent water from entering it. These ditches also convey water away and reduce the total volume of water which must be treated. This may result in decreased treatment costs, which could offset the costs of diversion.

Segregation or Combination of Mine and Process facility Wastewaters

A widely adopted control practice in the ore mining and dressing industry is the use of mine water as a source of process water. In many areas, this is a highly desirable practice, because it serves as a water-conservation measure. Waste constituents may thus be concentrated into one waste stream for treatment. In other cases, however, this practice results in the necessity for discharge from a process facility-water impoundment system because, even with recycle of part of the process water, a net positive water balance results.

At several sites visited as part of this study, degradation of the mine water quality is caused by combining the waste-water streams for treatment at one location. A negative effect results because water with low pollutant loading serves to dilute water of higher pollutant loading. This often results in decreased water-treatment efficiency because concentrated waste streams can often be treated more effectively than dilute waste streams. The mine water in these cases may be treated by relatively simple methods; while the volume of waste water treated in the process facility impoundment system will be reduced, this water will be treated with increased efficiency.

There are also locations where the use of mine water as process water has resulted in an improvement in the ultimate effluent. Choice of the options to segregate or combine

waste water treatment for mines and process facilitys must be made on an individual basis, taking into account the character of the waste water to be treated (at both the mine and the process facility), the water balance in the mine/process facility system, local climate, and topography. The ability of a particular operation to meet zero or reduced effluent levels may be dependent upon this decision at each location.

Regrading

Surface mining may often require removal of large amounts of overburden to expose the ores to be exploited. Regrading involves mass movement of material following ore extraction to achieve a more desirable land configuration. Reasons for regrading strip mined land are:

(1) aesthetic improvement of land surface
(2) returning usefulness to land
(3) providing a suitable base for revegetation
(4) burying pollution-forming materials, e.g. heavy metals
(5) reducing erosion and subsequent sedimentation
(6) eliminating landsliding
(7) encouraging natural drainage
(8) eliminating ponding
(9) eliminating hazards such as high cliffs and deep pits
(10) controlling water pollution

Contour regrading is currently the required reclamation technique for many of the nations's active contour and area surface mines. This technique involves regrading a mine to approximate original land contour. It is generally one of the most favored and aesthetically pleasing regrading techniques because the land is returned to its approximate pre-mined state. This technique is also favored because nearly all spoil is placed back in the pit, eliminating oversteepened downslope spoil banks and reducing the size of erodable reclaimed area. Contour regrading facilitates deep burial of pollution-forming materials and minimizes contact time between regraded spoil and surface runoff, thereby reducing erosion and pollution formation.

However, there are also several disadvantages to contour regrading that must be considered. In area and contour stripping, there may be other forms of reclamation that provide land configurations and slopes better suited to the intended uses of the land. This can be particularly true with steepslope contour strips, where large, high walls and

steep final spoil slopes limit application of contour regrading. Mining is, therefore, frequently prohibited in such areas, although there may be other regrading techniques that could be effectively utilized. In addition, where extremely thick ore bodies are mined beneath shallow overburden, there may not be sufficient spoil material remaining to return the land to the original contour.

There are several other reclamation techniques of varying effectiveness which have been utilized in both active and abandoned mines. These techniques include terrace, swale, swallow-tail, and Georgia V-ditch, several of which are quite similar in nature. In employing these techniques, the upper high-wall portion is frequently left exposed or backfilled at a steep angle, with the spoil outslope remaining somewhat steeper than the original contour. In all cases, a terrace of some form remains where the original bench was located, and there are provisions for rapidly channeling runoff from the spoil area. Such terraces may permit more effective utilization of surface-mined land in many cases.

Disposal of excess spoil material is frequently a problem where contour backfilling is not practiced. However, the same problem can also occur, although less commonly, where contour regrading is in use. Some types of overburden rock-particularly, tightly packed sandstones--substantially expand in volume when they are blasted and moved. As a result, there may be a large volume of spoil material that cannot be returned to the pit area, even when contour backfilling is employed. To solve this problem, head-of-hollow fill has been used for overburden storage. The extra overburden is placed in narrow, steep-sided hollows in compacted layers 1.2 to 2.4 meters (4 to 8 feet) thick and graded to control surface drainage.

In this regrading and spoil storage technique, natural ground is cleared of woody vegetation, and rock drains are constructed where natural drains exist, except in areas where inundation has occurred. This permits ground water and natural percolation to leave fill areas without saturating the fill, thereby reducing potential landslide and erosion problems. Normally, the face of the fill is terrace graded to minimize erosion of the steep outslope area.

This technique of fill or spoil material deposition has been limited to relatively narrow, steep-sided ravines that can be adequately filled and graded. Design considerations include the total number of acres in the watershed above a proposed head-of-hollow fill, as well as the drainage, slope stability, and prospective land use. Revegetation usually

proceeds as soon as erosion and siltation protection have been completed. This technique is avoided in areas where under-drainage materials contain high concentrations of pollutants, since the resultant drainage would require treatment to meet pollution-control requirements.

Erosion Control

Although regrading is the most essential part of surface-mine reclamation, it cannot be considered a total reclamation technique. There are many other facets of surface-mine reclamation that are equally important in achieving successful reclamation. The effectivenesses of regrading and other control techniques are interdependent. Failure of any phase could severly reduce the effectiveness of an entire reclamation project.

The most important auxiliary reclamation procedures employed at regraded surface mines or refuse areas are water diversion and erosion and runoff control. Water diversion involves collection of water before it enters a mine area and conveyance of that water around the mine site, as discussed previously. This procedure decreases erosion and pollution formation. Ditches are usually excavated upslope from a mine site to collect and convey water. Flumes and pipes are used to carry water down steep slopes or across regraded areas. Riprap and dumped rock are sometimes used to reduce water velocity in the conveyance system.

Diversion and conveyance systems are designed to accommodate predicted water volumes and velocities. If the capacity of a ditch is exceeded, water erodes the sides and renders the ditch ineffective.

Water diversion is also employed as an actual part of the mining procedure. Drainways at the bases of high walls intercept and divert discharging ground water prior to its contact with pollution-forming materials. In some instances, ground water above the mine site is pumped out before it enters the mine area, where it would become polluted and require treatment. Soil erosion is significantly reduced on regraded areas by controlling the course of surface-water runoff, using interception channels constructed on the regraded surface.

Water that reaches a mine site, such as direct rainfall, can cause serious erosion, sedimentation, and pollution problems. Runoff-control techniques are available to effectively deal with this water, but these techniques may conflict with pollution-control measures. Control of chemical pollutants forming at a mine frequently involves reduction of water infiltration, while runoff controls to

prevent erosion usually increase infiltration, which can subsequently increase pollutant formation.

There are a large number of techniques in use for controlling runoff, with highly variable costs and degrees of effectiveness. Mulching is sometimes used as a temporary measure which protects the runoff surface from raindrop impacts and reduces the velocity of surface runoff.

Velocity reduction is a critical facet of runoff control. This is accomplished through slope reduction by terracing or grading; revegetation; or use of flow impediments such as dikes, contour plowing, and dumped rock. Surface stabilizers have been utilized on the surface to temporarily reduce erodability of the material itself, but expense has restricted use of such materials in the past.

Revegetation

Establishment of good vegetative cover on a mine area is probably the most effective method of controlling runoff and erosion. A critical factor in mine revegetation is the quality of the soil or spoil material on the surface of a regraded mine. There are several methods by which the nature of this material has been controlled. Topsoil segregation during stripping is mandatory in many states. This permits topsoil to be replaced on a regraded surface prior to revegetation. However, in many forested, steep-sloped areas, there is little or no topsoil on the undisturbed land surface. In such areas, overburden material is segregated in a manner that will allow the most toxic materials to be placed at the base of the regraded mine, and the best spoil material is placed on the mine surface.

Vegetative cover provides effective erosion control; contributes significantly to chemical pollution control; results in aesthetic improvement; and can return land to agricultural, recreational, or silvicultural usefulness. A dense ground cover stabilizes the surface (with its root system), reduces velocity of surface runoff, helps build humus on the surface, and can virtually eliminate erosion. A soil profile begins to form, followed by a complete soil ecosystem. This soil profile acts as an oxygen barrier, reducing the amount of oxygen reaching underlying materials. This, in turn, reduces oxidation, which is a major contributing factor to pollutant formation.

The soil profile also tends to act as a sponge that retains water near the surface, as opposed to the original loose spoil (which allowed rapid infiltration). This water

evaporates from the mine surface, cooling it and enhancing vegetative growth. Evaporated water also bypasses toxic materials underlying the soil, decreasing pollution production. The vegetation itself also utilizes large quantities of water in its life processes and transpires it back to the atmosphere, again reducing the amount of water reaching underlying materials.

Establishment of an adequate vegetative cover at a mine site is dependent on a number of related factors. The regraded surface of many spoils cannot support a good vegetative cover without supplemental treatment. The surface texture is often too irregular, requiring the use of raking to remove as much rock as possible and to decrease the average grain size of the remaining material. Materials toxic to plant life, usually buried during regrading, generally do not appear on or near the final graded surface. If the surface is compacted, it is usually loosened by discing, plowing, or roto-tilling prior to seeding in order to enhance plant growth.

Soil supplements are often required to establish a good vegetative cover on surface-mined lands and refuse piles, which are generally deficient in nutrients. Mine spoils are often acidic, and lime must be added to adjust the pH to the tolerance range of the species to be planted. It may be necessary to apply additional neutralizing material to revegetated areas for some time to offset continued pollutant generation.

Several potentially effective soil supplements are currently undergoing research and experimentation. Flyash is a waste product of coal-fired boilers and resembles soil with respect to certain physical and chemical properties. Flyash is often alkaline, contains some plant nutrients, and possesses moisture retaining and soil-conditioning capabilities. Its main function is that of an alkalinity source and a soil conditioner, although it must usually be augmented with lime and fertilizers. However, flyash can vary drastically in quality--particularly, with respect to pH--and may contain leachable materials capable of producing water pollution. Future research, demonstration, and monitoring of flyash supplements will probably develop the potential use of such materials.

Limestone screenings are also an effective long-term neutralizing agent for acidic spoils. Such spoils generally continue to produce acidity as oxidation continues. Use of lime for direct planting upon these surfaces is effective, but it provides only short-term alkalinity. The lime is usually consumed after several years, and the spoil may return to its acidic condition. Limestone screenings are of

larger particle size and should continue to produce alkalinity on a decreasing scale for many years, after which a vegetative cover should be well-established. Use of large quantities of limestone should also add alkalinity to receiving streams. These screenings are often cheaper than lime, providing larger quantities of alkalinity for the same cost. Such applications of limestone are currently being demonstrated in several areas.

Use of digested sewage sludge as a soil supplement also has good possibilities for replacing fertilizer and simultaneously alleviating the problem of sludge disposal. Sewage sludge is currently being utilized for revegetation in strip-mined areas of Ohio. Besides supplying various nutrients, sewage sludge can reduce acidity or alkalinity and effectively increase soil absorption and moisture-retention capabilities. Digested sewage sludge can be applied in liquid or dry form and must be incorporated into the spoil surface. Liquid sludge applications require large holding ponds or tank trucks, from which sludge is pumped and sprayed over the ground, allowed to dry, and disced into the underlying material. Dry sludge application requires dryspreading machinery and must be followed by discing.

Limestone, digested sewage sludge, and flyash are all limited by their availabilities and chemical compositions. Unlike commercial fertilizers, the chemical compositions of these materials may vary greatly, depending on how and where they are produced. Therefore, a nearby supply of these supplements may be useless if it does not contain the nutrients or pH adjusters that are deficient in the area of intended application. Flyash, digested sewage sludge, and limestone screenings are all waste products of other processes and are, therefore, usually inexpensive. The major expense related to utilization of any of these wastes is the cost of transporting and applying the material to the mine area. Application may be quite costly and must be uniform to effect complete and even revegetation.

When such large amounts of certain chemical nutrients are utilized, it may also be necessary to institute controls to prevent chemical pollution of adjacent waterways. Nutrient controls may consist of preselection of vegetation to absorb certain chemicals, or of construction of berms and retention basins in which runoff can be collected and sampled, after which it can be discharged or pumped back to the spoil. The specific soil supplements and application rates employed are selected to provide the best possible conditions for the vegetative species that are to be planted.

Careful consideration should be given to species selection in surface-mine reclamation. Species are selected according

to some land-use plan, based upon the degree of pollution control to be achieved and the site environment. A dense ground cover of grasses and legumes is generally planted, in addition to tree seedlings, to rapidly check erosion and siltation. Trees are frequently planted in areas of poor slope stability to help control landsliding. Intended future use of the land is an important consideration with respect to species selection. Reclaimed surface-mined lands are occasionally returned to high-use categories, such as agriculture, if the land has potential for growing crops. However, when toxic spoils are encountered, agricultural potential is greatly reduced, and only a few species will grow.

Environmental conditions--particularly, climate--are important in species selection. Usually, species are planted that are native to an area--particularly, species that have been successfully established on nearby mine areas with similar climate and spoil conditions.

Revegetation of arid and semi-arid areas involves special consideration because of the extreme difficulty of establishing vegetation. Lack of rainfall and effects of surface disturbance create hostile growth conditions. Because mining in arid regions has only recently been initiated on a large scale, there is no standard revegetation technology. Experimentation and demonstration projects exploring two general revegetation techniques--moisture retention and irrigation--are currently being conducted to solve this problem.

Moisture retention utilizes entrapment, concentration, and preservation of water within a soil structure to support vegetation. This may be obtained utilizing snow fences, mulches, pits, and other methods.

Irrigation can be achieved by pumping or by gravity, through either pipes or ditches. This technique can be extremely expensive, and acquisition of water rights may present a major problem. Use of these arid-climate revegetation techniques in conjunction with careful overburden segregation and regrading should permit return of arid mined areas to their natural states.

Exploration, Development, and Pilot-Scale Operations

Exploration activities commonly employ drilling, blasting, excavation, tunneling, and other techniques to discover, locate, or define the extent of an ore body. These activities vary from small-scale (such as a single drill hole) to large scale (such as excavation of an open pit or outcrop face). Such activities frequently contribute to the

pollutant loading in waste water emanating from the site. Since available facilities (such as power sources) and ready accessibility of special equipment and supplies often are limited, sophisticated treatment is often not possible. In cases where exploration activity is being carried out, the scale of such operations is such that primary water-quality problems involve the presence of increased suspended-solid loads and potentially severe pH changes. Ponds should be provided for settling and retention of waste water, drilling fluids, or runoff from the site. Simple, accurate field tests for pH can be made, with subsequent pH adjustment by addition of lime (or other neutralizing agents).

Protection of receiving waters will thus be accomplished, with the possible additional benefits of removal of metals from solution--either in connection with solids removal or by precipitation from solution.

Development operations frequently are large-scale, compared to exploration activities, because they are intended to extend already known or currently exploited resources. Because these operations are associated with facilities and equipment already in existence, it is necessary to plan development activities to minimize pollution potential, and to use existing mine or process facility treatment and control methods and facilities. These operations should, therefore, be subject to limitations equivalent to existing operations with respect to effluent treatment and control.

Pilot-scale operations often involve small to relatively large mining and beneficiation facilities even though they may not be currently operating at full capacity or are in the process of development to full-scale. Planning of such operations should be undertaken with treatment and control of waste water in mind to ensure that effluent limitation guidelines and standards of performance for the category or subcategory will be met. Although total loadings from such operations and facilites are not at the levels expected from normal operating conditions, the compositions of wastes and the concentrations of waste water parameters are likely to be similar. Therefore, implementation of recommended treatment and control technologies must be accomplished.

Mine and Process facility Closure

Mine Closure (Underground). Unless well-planned and well-designed abatement techniques are implemented, an underground mine can be a permanent source of water pollution.

Responsibility for the prevention of any adverse environmental impacts from the temporary or permanent closure of a deep mine should rest solely and permanently with the mine operator. This constitutes a substantial burden; therefore, it behooves the operator to make use of the best technology available for dealing with pollution problems associated with mine closure. The two techniques most frequently utilized in deep-mine pollution abatement are treatment and mine sealing. Treatment technology is well defined and is generally capable of producing acceptable mine effluent quality. If the mine operator chooses this course, he is faced with the prospect of costly permanent treatment of each mine discharge.

Mine sealing is an attractive alternative to the prospects of perpetual treatment. Mine sealing requires the mine operator to consider barrier and ceiling-support design from the perspectives of strength, mine safety, their ability to withstand high water pressure, and their utility for retarding groundwater seepage. In the case of new mines, these considerations should be included in the mine design to cover the eventual mine closure. In the case of existing mines, these considerations should be evaluated for existing mine barriers and ceiling supports, and the future mine plan should be adjusted to include these considerations if mine sealing is to be employed at mine closure.

Sealing eliminates the mine discharge and inundates the mine workings, thereby reducing or terminating the production of pollutants. However, the possibility of the failure of mine seals or outcrop barriers increases with time as the sealed mine workings gradually became inundated by ground water and the hydraulic head increases. Depending upon the rate of ground-water influx and the size of the mined area, complete inundation of a sealed mine may require several decades. Consequently, the maximum anticipated hydraulic head on the mine seals may not be realized for that length of time. In addition, seepage through, or failure of, the barrier or mine seal could occur at any time. Therefore, the mine operator should be required to permanently maintain the seals, or to provide treatment in the event of seepage or failure.

Mine Closure (Surface). The objectives of proper reclamation management of closed surface mines and associated workings are to (1) restore the affected lands to a condition at least fully capable of supporting the uses which they were capable of supporting prior to any mining, and (2) achieve a stability which does not pose any threat to public health, safety, or water pollution. With proper planning and management during mining activities, it is often possible to minimize the amount of land disturbed or

excavated at any one time. In preparation for the day the operation may cease, a reclamation schedule for restoration of existing affected areas, as well as those which will be affected, should be specified. The use of a planned methodology such as this will return the workings to their premined condition at a faster rate, as well as possibly reduce the ultimate costs to the operator.

To accomplish the objectives of the desired reclamation goals, it is mandatory that the surface-mine operator regrade and revegetate the disturbed area during, or upon completion of, mining. The final regraded surface configuration is dependent upon the ultimate land use of the specific site, and control practices described in this report can be incorporated into the regrading plan to minimize erosion and sedimentation. The operator should establish a diverse and permanent vegetative cover and a plant succession at least equal in extent of cover to the natural vegetation of the area. To assure compliance with these requirements and permanence of vegetative cover, the operator should be held responsible for successful revegetation and effluent water quality for a period of five full years after the last year of augmented seeding. In areas of the country where the annual average precipitation is 64 cm (26 in.) or less, the operator's assumption of responsibility and liability should extend for a period of ten full years after the last year of augmented seeding, fertilization, irrigation, or effluent treatment.

Process facility Closure. As with closed mines, a beneficiation facility's potential contributions to water pollution do not cease upon shutdown of the facility. Tailing ponds, waste or refuse piles, haulage areas, workings, dumps, storage areas, and processing and shipping areas often present serious problems with respect to contributions to water pollution. Among the most important are tailing ponds, waste piles, and dump areas. Failure of tailing ponds can have catastrophic consequences, with respect to both immediate safety and water quality.

To protect against catastrophic occurrences, tailing ponds should be designed to accommodate, without overflow, an abnormal storm which is observed every 25 years. Since no waste water is contributed from the processing of ores (the facility being closed), the ponds will gradually become dewatered by evaporation or by percolation into the subsurface. The structural integrity of the tailing-pond walls should be periodically examined and, if necessary, repairs made. Seeding and vegetation can assist in stabilizing the walls, prevent erosion and sedimentation, lessen the probability of structural failure, and improve the aesthetics of the area.

Refuse, waste, and tailing piles should be recontoured and revegetated to return the topography as near as possible to the condition it was in before the activity. Techniques employed in surface-mine regrading and revegetation should be utilized. Where process facilitys are located adjacent to mine workings, the mines can be refilled with tailings. Care should be taken to minimize disruption of local drainage and to ensure that erosion and sedimentation will not result. Maintenance of such refuse or waste piles and tailing-disposal areas should be performed for at least five years after the last year of regrading and augmented seeding. In areas of the country where the annual average precipitation is 64 cm (26 in.) or less, the operator's assumption of responsibility should extend for a period of ten full years after the last year of augmented seeding, fertilization, irrigation, or effluent treatment.

Monitoring

Since most waste water discharges from these industries contain suspended solids as the principal pollutant, complex water analyses are not usually required. On the other hand, some of these industries today do little or no monitoring on waste water discharges. In order to obtain meaningful knowledge and control of their waste water quality, many mines and minerals processing facilities need to institute routine monitoring measurements of the few pertinent waste parameters.

SUSPENDED SOLIDS REMOVAL

The treatment technologies available for removing suspended solids from chemical and fertilizer minerals waste water are numerous and varied, but a relatively small number are used widely. The following shows the approximate breakdown of usage for the various techniques:

removal technique	percent of treatment facilities using technology
settling ponds (unlined)	95-97
settling ponds (lined)	<1
chemical flocculation (usually with ponds)	2-5
thickeners and clarifiers	2-5
hydrocyclones	<1
tube and lamella settlers	<1
screens	<1
filters	<1
centrifuges	<1

Settling Ponds

As shown above, the predominant treatment technique for removal of suspended solids involves one or more settling ponds. Settling ponds are versatile in that they perform several functions including:

(1) Solids removal. Solids settle to the bottom and the clear water overflow is much reduced in suspended solids content.

(2) Equalization and water storage capacity. The clear supernatant water layer serves as a reservoir for reuse or for controlled discharge.

(3) Solid waste storage. The settled solids are provided with long term storage.

This versatility, ease of construction and relatively low cost, explains the wide application of settling ponds as compared to other technologies.

The performance of these ponds depends primarily on the settling characteristics of the solids suspended, the flow rate through the pond and the pond size. Settling ponds can be used over a wide range of suspended solids levels. Often a series of ponds is used, with the first collecting the heavy load of easily settleable material and the following ones providing final polishing to reach a desired final suspended level. As the ponds fill with settled solids they can be dredged to remove these solids or left filled and new ponds constructed. The choice often depends on whether land for additional new ponds is available. When suspended solids levels are low and ponds large, settled solids build up so slowly that neither dredging nor pond abandonment is necessary, at least not for a period of many years.

Settling ponds used in the minerals industry run the gamut from small pits, natural depressions and swamp areas to engineered thousand acre structures with massive retaining dams and legislated construction design. The performance of these ponds varies from excellent to poor, depending on character of the suspended particles, and pond size and configuration.

In general, the current experience in this industry segment with settling ponds shows effluents ranging from 14 to 703 mg/l of TSS. Performance data for some settling ponds and treatment systems incorporating settling ponds found in the sulfur, phosphate rock, fluorspar, lithium minerals, rock salt, and salines from brine lakes subcategories are given in Table 6.

TABLE 6
Settling Pond Performance

Plant	TSS, mg/l Influent	Effluent	Percent Reduction	Treatment
Sulfur				
2021	120	65	45.83	Flash strip H_2S, oxidation with seawater
2022	--	33	--	None
2023	100	14	86.0	Spray aeration to reduce H_2S, oxidation with seawater
2024	148	290	--	Oxidation, ponds
2025	271	50	81.55	Flue gas to strip H_2S, ponds
2026	324	76	76.55	Oxidation, ponds
Fluorspar				
2000	8,633	235	97.28	Pond
2009	25,356	316	98.75	Thickener, ponds
Phosphate Rock				
4003	5,620	193	96.56	Pond
4005	329	50	84.80	Ponds
4015	1,684	21	95.45	Ponds
	2,036	39	96.26	
4017	6,500	17	99.36	Ponds
4023	2,985	645	78.39	Flocculating agent, thickener
Lithium Minerals				
4001	17,150	41	99.76	Flocculating agent, pond
4009	4,720	14	99.70	Flocculating agent, pond
Rock Salt				
4011	---	180	---	None
4014	194	216	---	None
Salines from Lake Brines				
5896	1,945	703	63.86	None

There appear to be no correlations within a sampled subcategory due to differences in quality of intake water, mined product, or processing. However, over the entire range of sampled facilities both influent and effluent characteristics have relatively normal distributions. This is shown in Figure 31. This figure also shows a greater standard deviation of influent characteristics than effluent, demonstrating the characteristic effectiveness of ponding in reducing suspended solids from a wide range of high concentrations to a relatively narrow range of low concentrations.

Clarifiers and Thickeners

An alternative method of removing suspended solids is the use of clarifiers or thickeners which are essentially tanks with internal baffles, compartments, sweeps and other directing and segregating mechanisms to provide efficient concentration and removal of suspended solids in one effluent stream and clarified liquid in the other.

Clarifiers differ from thickeners primarily in their basic purpose. Clarifiers are used when the main purpose is to produce a clear overflow with the solids content of the sludge underflow being of secondary importance. Thickeners, on the other hand, have the basic purpose of producing a high solids underflow with the character of the clarified overflow being of secondary importance. Thickeners are also usually smaller in size but more massively constructed for a given throughput.

Clarifiers and thickeners have a number of distinct advantages over ponds:

(1) Less land space is required. Area-for-area these devices are much more efficient in settling capacity than ponds.

(2) Influences of rainfall are much less than for ponds. If desired, the clarifiers and thickeners can even be covered.

(3) Since the external construction of clarifiers and thickeners consists of concrete or steel tanks ground seepage and rain water runoff influences do not exist.

On the other hand, clarifiers and thickeners suffer some distinct disadvantages as compared with ponds:

(1) They have more mechanical parts and maintenance.

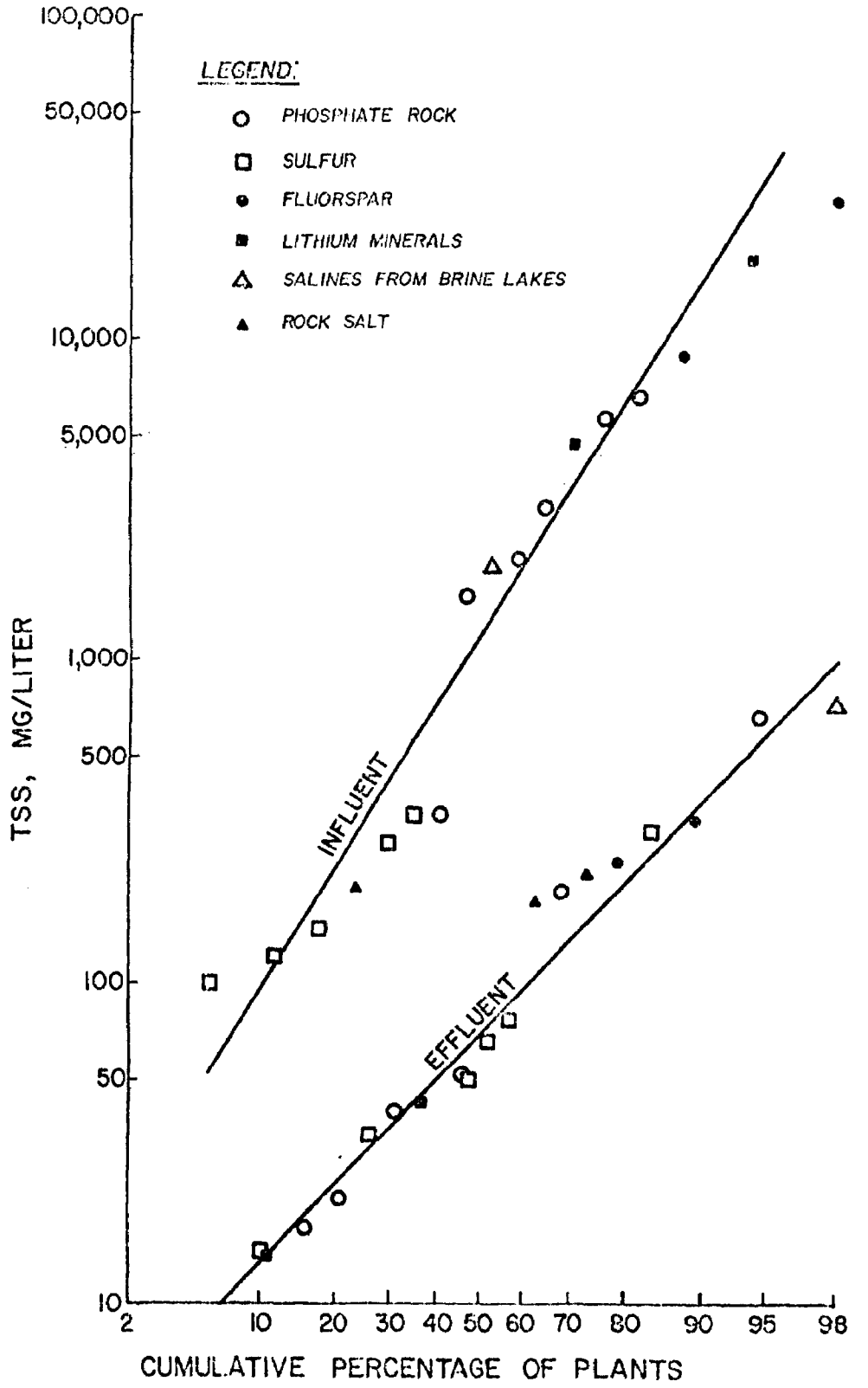

FIGURE 31
SETTLING POND PERFORMANCE DISTRIBUTION
OF VALUES FROM INDUSTRY SEGMENT

(2) They have only limited storage capacity for either clarified water or settled solids.

(3) The internal sweeps and agitators in thickeners and clarifiers require more power and energy for operation than ponds.

Clarifiers and thickeners are usually used when sufficient land for ponds is not available or is very expensive.

Hydrocyclones

While hydrocyclones are widely used in the separation, classification and recovery operations involved in minerals processing, they are used only infrequently for waste water treatment. Even the smallest diameter units available (stream velocity and centrifugal separation forces both increase as the diameter decreases) are ineffective when particle size is less than 25-50 microns. Larger particle sizes are relatively easy to settle by means of small ponds, thickeners or clarifiers or other gravity principle settling devices. It is the smaller suspended particles that are the most difficult to remove and it is these that cannot be removed by hydrocyclones but may be handled by ponds or other settling technology. Also hydrocyclones are of doubtful effectiveness when flocculating agents are used to increase settling rates.

Hydrocyclones are used as scalping units to recover small sand or other mineral particles in the 25 to 200 micron range, particularly if the recovered material can be sold as product. In this regard hydrocyclones may be considered as converting part of the waste load to useful product as well as providing the first step of waste water treatment. Where land availability is a problem, a bank of hydroclones may serve in place of a primary settling pond.

Tube and Lamella Settlers

Tube and lamella settlers require less land area than clarifiers and thickeners. These compact units, which increase gravity settling efficiency by means of closely packed inclined tubes and plates, can be used for either scalping or waste water polishing operations depending on throughput and design.

Centrifuges

Centrifuges are not widely used for minerals mining waste water treatment. Present industrial type centrifuges are relatively expensive and not particularly suited for this purpose. Future use of centrifuges will depend on

regulations, land space availability and the development of specialized units suitable for minerals mining operations.

Flocculation

Flocculating agents increase the efficiency of settling facilities and they are of two general types: ionic and polymeric. The ionic types such as alum, ferrous sulfate and ferric chloride function by neutralizing the repelling double layer ionic charges around the suspended particles and thereby allowing the particles to attract each other and agglomerate. Polymeric types function by forming physical bridges from one particle to another and thereby agglomerating the particles.

Flocculating agents are most commonly used after the larger, more readily settled, particles (and loads) have been removed by a settling pond, hydrocyclone or other such scalping treatment. Agglomeration, or flocculation, can then be achieved with less reagent and less settling load on the polishing pond or clarifier.

Flocculation agents can be used with minor modifications and additions to existing treatment systems, but the costs for the flocculating chemicals are often significant. Ionic types are used in 10 to 100 mg/l concentrations in the waste water while the higher priced polymeric types are effective in the 2 to 20 mg/l concentrations. Flocculants have been used by several segments within the minerals industry with varying degrees of success. The use of flocculants particularly for the hard to settle solids is more of an art than a science, since it is frequently necessary to try several flocculants at varying concentrations.

Screens

Screens are widely used in minerals and mining processing operations for separations, classifications and beneficiations. They are similar to hydrocyclones in that they are restricted to removing the larger (50-100 micron) particle size suspended solids of the waste water, which can then often be sold as useful product. Screens are not practical for removing the smaller suspended particles.

Filtration

Filtration is accomplished by passing the waste water stream through solids-retaining screens, cloths, or particulates such as sand, gravel, coal or diatomaceous earth using gravity, pressure or vacuum as the driving force. Filtration is versatile in that it can be used to remove a wide range of suspended particle sizes.

The large volumes of many waste water streams found in minerals mining operations require large filters. The cost of these units and their relative complexity, compared to settling ponds, has restricted their use to a few industry segments committed to complex waste water treatment.

DISSOLVED MATERIAL TREATMENTS

Treatments for dissolved materials are based on either modifying or removing the undesired materials. Modification techniques include chemical treatments such as neutralization and oxidation-reduction reactions. Acids, alkaline materials, sulfides and other toxic or hazardous materials are examples of dissolved materials modified in this way. Most removal of dissolved solids is accomplished by chemical precipitation. Techniques such as ion exchange, carbon adsorption, reverse osmosis and evaporation are rarely used in the chemical and fertilizer minerals industry.

Chemical treatments for abatement of waterborne wastes are common. Included in this overall category are neutralization, pH control, oxidation-reduction reactions, coagulations, and precipitations.

Neutralization

Some of the waste waters of this study, often including mine drainage water, are either acidic or alkaline. Before disposal to surface water or other medium excess acidity or alkalinity needs to be controlled to the range of pH 6 to 9. The most common method is to treat acidic streams with alkaline materials such as limestone, lime, soda ash, or sodium hydroxide. Alkaline streams are treated with acids such as sulfuric. Whenever possible, advantage is taken of the availability of acidic waste streams to neutralize basic waste streams and vice versa. Neutralization often produces suspended solids which must be removed prior to waste water disposal.

pH Control

The control of pH may be equivalent to neutralization if the control point is at or close to pH 7. Sometimes chemical addition to waste streams is designed to maintain a pH level on either the acidic or basic side for purposes of controlling solubility.

The importance of maintaining control of pH in effluent waste waters is especially significant in the phosphate rock industry. Figure 32 shows the effect of pH upon the solubility of calcium phosphate in water. In the pH range

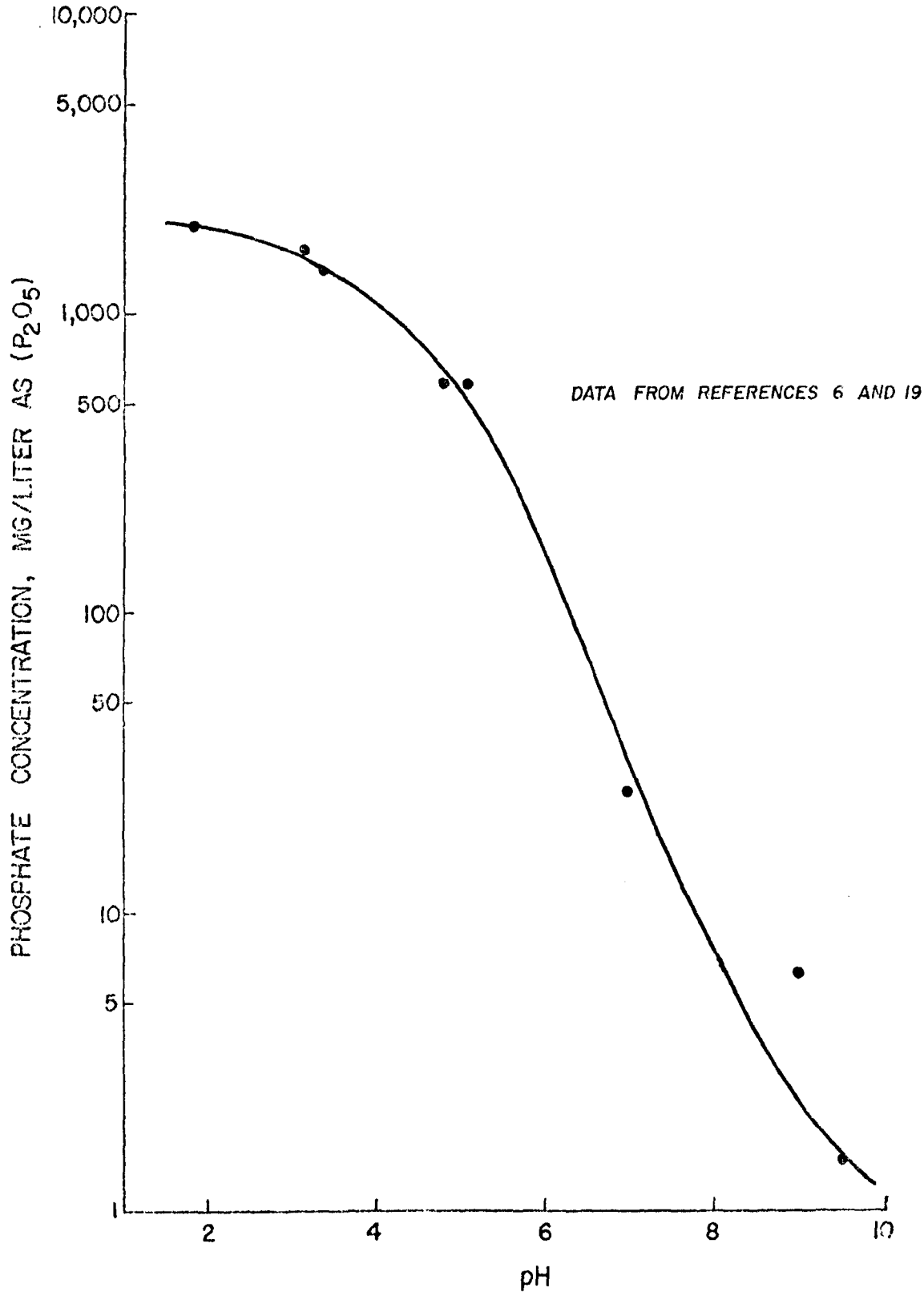

FIGURE 32

CALCIUM PHOSPHATE SOLUBILITY AS A FUNCTION OF pH

for waste water discharged 6.2 to 8.2, which was found in this industry, the solubility is strongly affected by pH changes. Over this pH range, the solubility of phosphate (as P) changes from 52.4 to 2.6 mg/l, indicating that a slight shift in pH can cause a marked shift in phosphate between the dissolved and suspended solids phases. Since suspended solids can be relatively easily removed by physical means, the need to maintain pH as high as is otherwise permissible is evident.

Examples of pH control being used for precipitating metallic pollutants are:

(1) $Fe^{+3} + 3OH^- = Fe(OH)_3$

(2) $Mn^{+2} + 2OH = Mn(OH)_2 + 2H^+ + 4e^-$

(3) $Zn^{+2} + 2OH^- = Zn(OH)_2$

(4) $Pb^{+2} + 2(OH)^- = Pb(OH)_2$

(5) $Cu^{+2} + 2OH^- = Cu(OH)_2$.

Oxidation-Reduction Reactions

The modification or destruction of many hazardous wastes is accomplished by chemical oxidation or reduction reactions. Hexavalent chromium is reduced to the less hazardous trivalent form with sulfur dioxide or bisulfites. Sulfides can be oxidized with air to relatively innocuous sulfates. The oxidation reactions for a number of sulfur compounds pertinent to the sulfur industry are discussed below.

Inorganic Sulfur Compounds

Inorganic sulfur compounds range from the very harmful hydrogen sulfide to the relatively innocuous sulfate salts such as sodium sulfate. Intermediate oxidation products include sulfides, thiosulfates, hydrosulfites, and sulfites.

Oxidation of sulfur compounds is accomplished with air, hydrogen peroxide, chlorine, amoung others.

(1) <u>Sulfides</u>

Sulfides are readily oxidizable with air to thiosulfate. Thiosulfates are less harmful than sulfides (of the order of 1000 to 1).

$$4S^- + 3O_2 = 2S_2O_3^=$$

The reaction goes to 90-95 percent completion.

(2) Thiosulfates

Thiosulfates are difficult to oxidize further with air (21). They can, however, be oxidized to sulfates with powerful oxidizing agents such as chlorine or peroxides:

$$S_2O_3^{=} + Cl_2 = 2SO_4^{=}$$

$$S_2O_3^{=} + H_2O_2 = 2SO_4^{=}$$

However, the Frasch sulfur industry has experienced oxidation of sulfides to elemental sulfur and oxidation of thiosulfides to sulfates.

(3) Hydrosulfites

Hydrosulfites can also be oxidized by such oxidizing agents and perhaps with catalyzed air oxidation:

$$S_2O_4^{=} + Cl_2 = 2SO_4$$

$$S_2O_4^{=} + H_2O_2 = 2SO_4^{=}$$

(4) Sulfites

Sulfites are readily oxidized with air to sulfates at a 90-99 percent completion level. Chlorine and peroxides are also effective.

$$2SO_3 + O_2 = 2SO_4$$

Precipitations

The reaction of two soluble chemicals to produce insoluble or precipitated products is the basis for removing many undesired waterborne wastes. Examples include lime treatments to precipitate sulfates, fluorides, hydroxides and carbonates and sodium sulfide precipitations of copper, lead and other toxic heavy metals. Precipitation reactions can generate large suspended solids loads.

The following are examples of precipitation reactions used for waste water treatment:

(1) $SO_4^{=} + Ca(OH)_2 = CaSO_4 + 2OH^-$

(2) $2F^- + Ca(OH)_2 = CaF_2 + 2OH^-$

(3) $Zn^{++} + Na_2CO_3 = ZnCO_3 + 2Na^+$

Sulfur Production

Salt dome sulfur producers have large quantities of bleedwater to treat and dispose of. This presents two problems: removal of sulfides and disposal of the remaining brine. Since there is currently no practical or economical means of removing the salt from the brine, it must be disposed of either in brackish or salt water, or impounded and discharged intermittently during specified times.

Removal of sulfides prior to discharge of the brine is also a major treatment problem. There are two types of bleedwater treatment facilities found in this industry for removal of sulfides. Examples of each are given in Figures 33 and 34.

In treatment type 1 the bleedwater is air lifted to a small settling basin and then sent to a mixing zone where sulfurous acid and deposition inhibitor are added. The bleedwater is then sent to packed towers for removal of hydrogen sulfide. In the packed towers the bleedwater flows countercurrent to cooled boiler flue gas. The treated bleedwater is then aerated and sent to a series of settling and clarification ponds prior to discharge. This method is effective for removal of sulfides and reduction of BOD in the bleedwater.

In treatment type 2 the bleedwater is mixed with sulfurous acid which is generated by burning liquid sulfur or from hydrogen sulfide originating from the bleedwater. In this process the soluble sulfides in the bleedwater are converted to elemental sulfur and oxidized sulfur products in a series of reaction vessels. Excess acid is then neutralized with lime. The insoluble sulfur is removed by sedimentation, and the treated effluent is then sent to a series of basins prior to discharge. This method is very effective for removal of sulfides, but does not reduce BOD in the bleedwater to acceptable limits.

At the one off-shore salt dome sulfur facility currently operating, the bleedwater is discharged without treatment. The treatment technologies used by on-shore salt dome facilities, ponding and bleedwater treatment facilities are not considered feasible here due to non-availability of land and space restrictions on a platform.

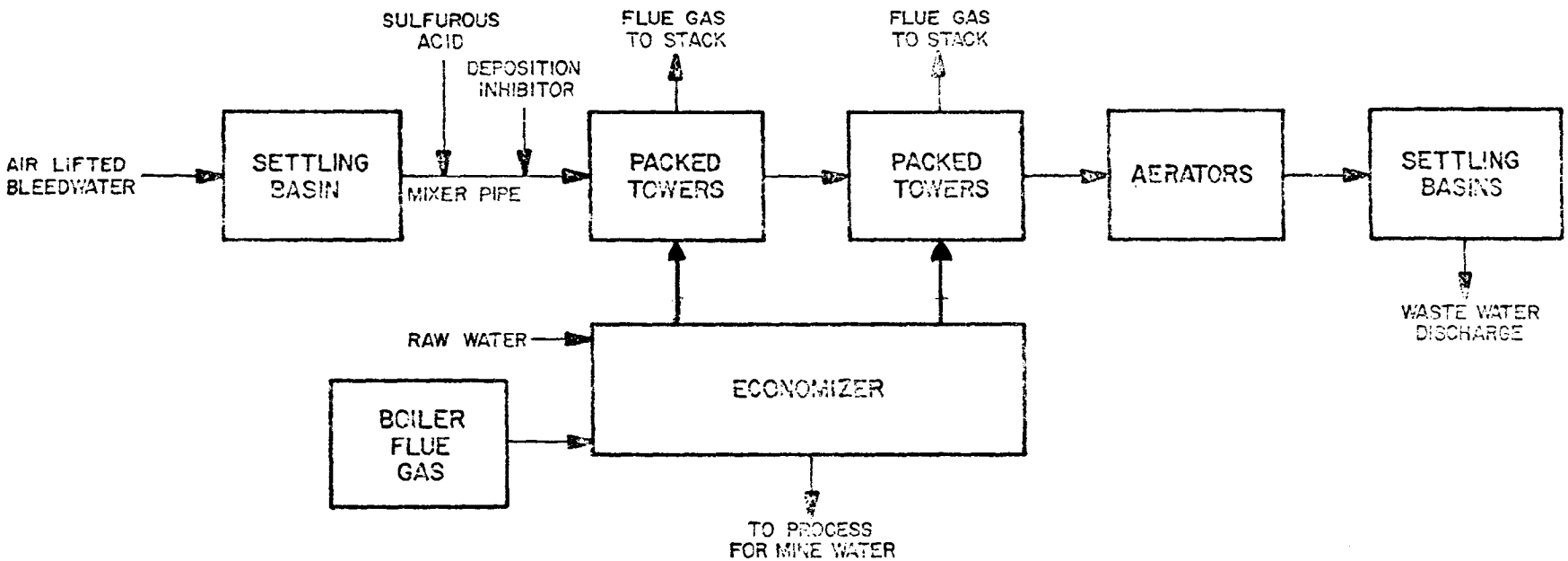

FIGURE 33
BLEEDWATER TREATING PLANT
TYPE I

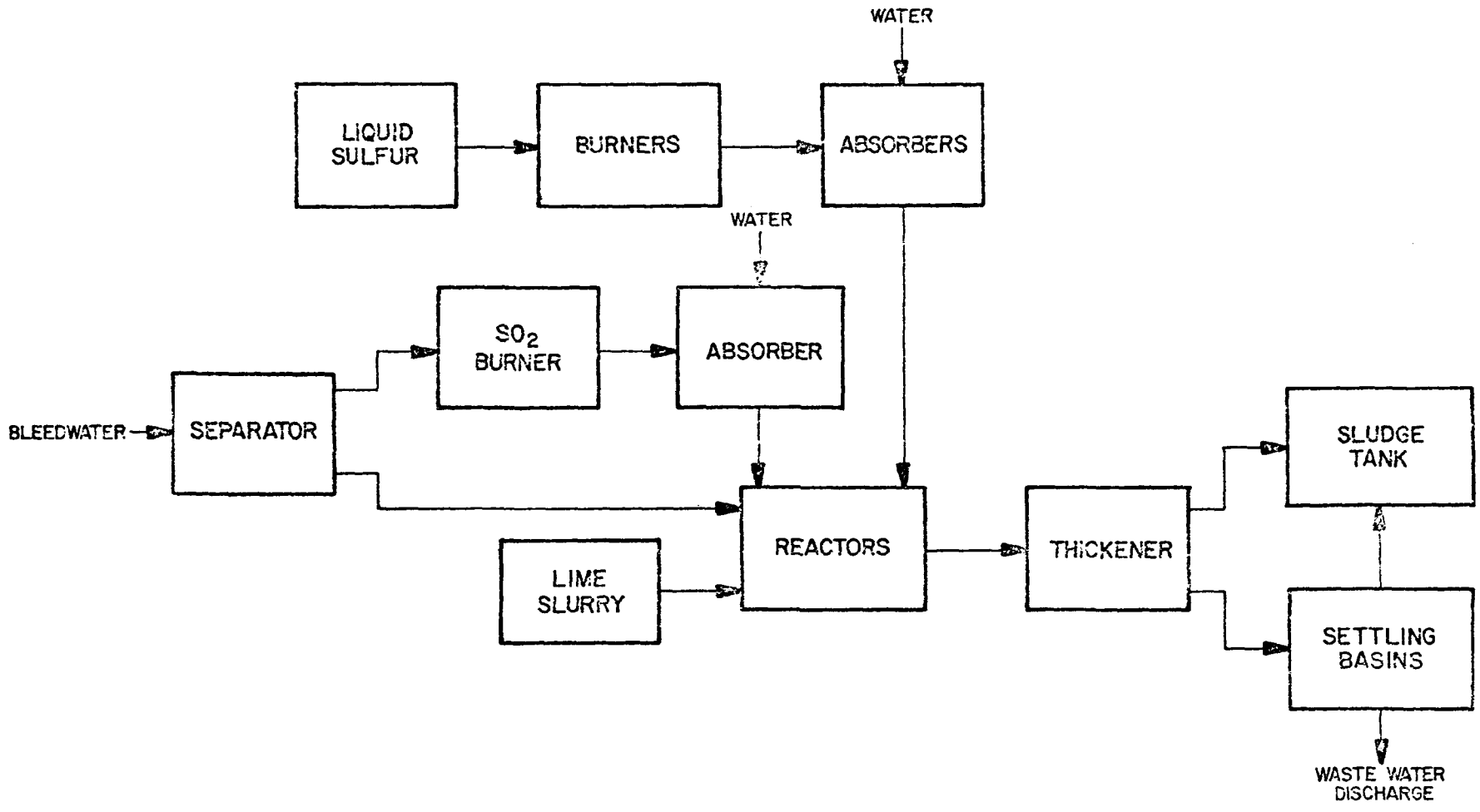

FIGURE 34
BLEEDWATER TREATING PLANT
TYPE 2

SUMMARY OF TREATMENT TECHNOLOGY APPLICATIONS, LIMITATIONS AND RELIABILITY

Table 7 summarizes comments on the various treatment technologies as they are utilized for the minerals and mining industry.

Estimates of the efficiency with which the treatments remove suspended or dissolved solids from waste water, given in the table need to be interpreted in the following context. These values will obviously not be valid for all circumstances, concentrations or materials, but they should provide a general guideline for treatment performance capabilities. Several comments may be made concerning the values:

(1) At high concentrations and optimum conditions, all treatments can achieve 99 percent or better removal of the desired material;

(2) At low concentrations, the removal efficiency drops off.

(3) Minimum concentration ranges achievable will not hold in every case. For example, pond settling of some suspended solids might not achieve less than the 100 mg/l level. This is not typical, however, since many such pond settling treatments can achieve 10 to 20 mg/l without difficulty. Failure to achieve the minimum concentration levels listed usually means that either the wrong treatment methods have been selected or that an additional treatment step is necessary (such as a second pond or polish filtration).

PRETREATMENT TECHNOLOGY

Chemical and fertilizer mineral mining operations are usually conducted in relatively isolated regions where there is no access to publicly owned waste water treatment facilities. In areas where publicly owned facilities could be used, pretreatment would often be required to reduce the heavy suspended solids load.

In the instances where dissolved materials are serious, pH control and some reduction of hazardous constituents such as fluorides, sulfides, and heavy metals would be required. Lime treatment will usually be sufficient for reductions of fluorides and heavy metals. Sulfides would require air oxidation or other chemical treatment.

Table 7. Summary of Technology, Applications, Limitations and Reliability

Waste Water Constituents	Treatment Process	Application	Percent Solids Removal	Expected Concentration (mg/l)	Minimum Concentration Achievable (mg/l)	Availability of Equipment	Lead Time (months)	Space or Land Needed	Maintenance Required	Sensitivity to Shock Loads	Effects of Shutdown and Startup	Energy Requirements
Suspended Solids	(1) Pond Settling	Used for all concentrations	60-99	5-200	5-20	none needed	1-12	large 1-500 acres small 0.05-1.0 acres	small	small	small	small
	(2) Clarifier Thickeners	Used for all concentrations	60-99	5-1000	5-30	readily available	3-24	<1 acre	nominal	sensitive	nominal	nominal
	(3) Hydro-cyclones	Removal of larger particle sizes	50-99	--	--	ready available	3-12	approx. 10' x 10'	small	sensitive	small	small
	(4) Tube and Lamella Settlers	Removal of smaller particle sizes	90-99	--	--	readily available	3-12	approx. 10' x 10'	small	sensitive	nominal	small
	(5) Screens	Removal of larger particle sizes	50-99	--	--	ready available	3-12	approx. 10' x 10'	nominal	small	small	small
	(6) Rotary Vacuum Filters	Mainly for sludges and other high suspended solids streams	90-99	5-1000	5-30	readily available	3-12	approx. 10' x 10'	nominal	sensitive	nominal	nominal
	(7) Solid Bowl Centrifuge	Mainly for sludges and other high suspended solids streams	60-99	--	--	readily available	3-12	approx. 10' x 10'	nominal	sensitive	small	nominal
	(8) Leaf and Pressure Filters	Used over wide concentration range	90-99	10-100	5-30	readily available	3-6	approx. 10' x 10'	small	sensitive	small	small
	(9) Cartridge and Candle Filters	Mainly for polishing filtration of suspended solids	50-99	2-10	2-10	readily available	1-3	approx. 10' x 10'	small	sensitive	small	small
	(10) Sand and Mixed Media Filters	Mainly for polishing filtration of suspended solids	50-99	2-50	2-10	readily available	3-6	approx. 10' x 10'	small	sensitive	small	small
Dissolved Solids	(1) Neutralization and pH Control	General	99	NA	NA	readily available	3-12	small 20' x 20' or less	minor	nominal	small	small
	(2) Precipitation	Usually used to remove solubles	50-97	0-20	0-10	readily available	3-6	small 20' x 20'	minor	sensitive	small	small

NON-WATER QUALITY ENVIRONMENTAL ASPECTS, INCLUDING ENERGY REQUIREMENTS

The effects of these treatment and control technologies on noise pollution and thermal pollution are usually small and not of any significance. Some impact on air quality occurs with sulfide wastes generated in sulfur production. However, the isolated locations of sulfur facilities and selection of treatment is usually sufficient to eliminate any problem. There is also radiation from phosphate ores and wastes. The concentration of radionuclides is low in materials involved with phosphate mining and beneficiating operations. Nevertheless, significant quantities of radionuclides may be stored or redistributed, because of the large volumes of slimes tailings and other solid wastes.

Large amounts of solid waste in the form of both solids and sludges are formed as a result of all suspended solids operations as well as chemical treatments for neutralization and precipitations. Easy-to-handle, relatively dry solids are usually left in settling ponds or dredged out periodically and dumped onto the land. Since mineral mining properties are usually large, space for such dumping is often available. Sludges and difficultly settled solids are most often left in the settling pond, for example, phosphate slimes, but may in some instances be landfilled.

For those waste materials considered to be non-hazardous where land disposal is the choice for disposal, practices similar to proper sanitary landfill technology may be followed. The principles set forth in the EPA's Land Disposal of Solid Wastes Guidelines (CFR Title 40, Chapter 1; Part 241) may be used as guidance for acceptable land disposal techniques.

For those waste materials considered to be hazardous, disposal will require special precautions. In order to ensure long-term protection of public health and the environment, special preparation and pretreatment may be required prior to disposal. If land disposal is to be practiced, these sites must not allow movement of pollutants such as fluoride and radium-226 to either ground or surface water. Sites should be selected that have natural soil and geological conditions to prevent such contamination or, if such conditions do not exist, artificial means (e.g., liners) must be provided to ensure long-term protection of the environment from hazardous materials. Where appropriate, the location of solid hazardous materials disposal sites should be permanently recorded in the appropriate office of the legal jurisdiction in which the site is located.

In summary, the solid wastes and sludges from the chemical and fertilizer minerals mining industry waste water treatments are very large in quantity, but the industry, having sufficient space and earth-moving capabilities, manages it with greater ease than could most other industries.

For the best practicable control technology currently available the added annual energy requirements are estimated to be 9 x 10^{10} kcal. This would increase the present energy use for control in this industry by about six percent. Over 90 percent of the added energy requirements is attributable to two subcategories, phosphate rock (flotation) and sulfur (on-shore salt dome).

SECTION VIII

COST, ENERGY, WASTE REDUCTION BENEFITS AND NON-WATER ASPECTS OF TREATMENT AND CONTROL TECHNOLOGIES

SUMMARY

The chemical and fertilizer industries segment of the mineral mining and processing industry contains several subcategories with large waste water treatment capital investments and operating costs. These large costs result from large quantities of waste water or large quantities of solid waste.

Waste treatment costs in barite mining stem mainly from the large volumes of solid wastes generated. Often 93-97 percent of the ore is gangue wastes, much of which is stored in settling ponds.

Both factors strongly affect the treatment costs of wastes from phosphate rock mining. Trona ore and borate mining waste treatment costs are high due to the use of large evaporation ponds for waste water disposal. In both cases percolation and seepage problems materially increase the overall investment costs.

Large quantities of waste water are responsible for large treatment costs in sulfur extraction. Sulfides in bleedwater require heavy treatment chemical costs or large ponds for oxidation by aeration.

The wastes from mineral mining ore beneficiation steps are closely related to the ore composition and therefore treatment costs in these industries have an additional source of variance not experienced in other industries having greater control of raw material quality.

In general, facility size and age have little influence on the type of waste effluent. The amounts and costs for their treatment and disposal are readily scaled from facility size and are not greatly affected by facility age.

Geographical location is important. Mines and processing facilities located in dry western areas rarely require major waste water treatment or have subsequent disposal problems.

Terrain and land availability are also significant factors affecting treatment technology and costs. Lack of sufficient flat space for settling ponds often forces

utilization of mechanical thickeners, clarifiers, or settlers. On the other hand, advantage is often taken of valleys, hills, swamps, gullies and other natural configurations to provide low cost pond and solid waste disposal facilities. Permeability of the terrain influences greatly the cost of leak-proof treatment ponds.

In view of the large number of mines and beneficiation facilities and the significant variables listed above, costs have been developed for representative mines and processing facilities rather than specific exemplary facilities that may have advantageous geographical, terrain or ore composition.

A summary of cost and energy information for the present level of waste water treatment technology for this segment is given in Table 8. Present capital investment for waste water treatment in the minerals for the chemical and fertilizer industries segment is estimated at $183,000,000.

COST REFERENCES AND RATIONALE

Cost information contained in this report was assembled directly from industry, from waste treatment and disposal contractors, engineering firms, equipment suppliers, government sources, and published literature. Whenever possible, costs are taken from actual installations, engineering estimates for projected facilities as supplied by contributing companies, or from waste treatment and disposal contractors quoted prices. In the absence of such information, cost estimates have been developed insofar as possible from facility-supplied costs for similar waste treatments and disposal for other facilities or industries.

Interest Costs and Equity Financing Charges

Capital investment estimates for this study have been based on 10 percent cost of capital, representing a composite number for interest paid or return on investment required.

Time Basis for Costs

All cost estimates are based on August 1972 prices and when necessary have been adjusted to this basis using the chemical engineering facility cost index.

Useful Service Life

The useful service life of treatment and disposal equipment varies depending on the nature of the equipment and process involved, its usage pattern, maintenance care and numerous other factors. Individual companies may apply service lives

TABLE 8

CAPITAL INVESTMENTS AND ENERGY CONSUMPTION OF

PRESENT WASTEWATER TREATMENT FACILITIES

Subcategory	Capital Spent (Dollars)	Present Energy Use (Kcal x 10^6)	Total Annual Costs ($/kkg produced)
Barite	11,400,000	137,000	2.5
Fluorspar	1,250,000	12,800	1.9
Borax	2,500,000	7,500	0.44
Potash	1,150,000	5,300	0.32
Trona Ore Mining and Refining	11,000,000	75,000	0.54
Phosphate Rock (Eastern)	120,000,000	938,000	0.73
Phosphate Rock (Western)	18,500,000	278,000	0.54
Rock Salt	200,000	9,700	0.01
Sulfur (Anhydrite)	1,375,000	19,000	0.83
Sulfur (on-shore Salt Dome)	14,000,000	25,000	0.95
Mineral Pigments	<50,000	<1,000	1.08
Lithium Minerals	1,200,000	6,200	6.2
Sodium Sulfate	<50,000	<1,000	0.01
TOTAL	183,000,000	1,500,000	---

based on their actual experience for internal amortization. Internal Revenue Service provides guidelines for tax purposes which are intended to approximate average experience.

Based on discussions with industry and condensed IRS guideline information, the following useful service life values have been used:

(1)	General process equipment	10 years
(2)	Ponds, lined and unlined	20 years
(3)	Trucks, bulldozers, loaders and other such materials handling and transporting equipment	5 years

Depreciation

The economic value of treatment and disposal equipment and facilities decreases over its service life. At the end of the useful life, it is usually assumed that the salvage or recovery value becomes zero. For IRS tax purposes or internal depreciation provisions, straight line, or accelerated write-off schedules may be used. Straight line depreciation was used solely in this report.

Capital Costs

Capital costs are defined as all front-end out-of-pocket expenditures for providing treatment/disposal facilities. These costs include costs for research and development necessary to establish the process, land costs when applicable, equipment, construction and installation, buildings, services, engineering, special start-up costs and contractor profits and contingencies.

Annual Capital Costs

Most if not all of the capital costs are accrued during the year or two prior to actual use of the facility. This present worth sum can be converted to equivalent uniform annual disbursements by utilizing the Capital Recovery Factor Method:

$$\text{Uniform Annual Disbursement} = P \frac{i\ (1+i)^{n\text{th power}}}{(1+i)^{n\text{th power}} - 1}$$

Where P = present value (capital expenditure), i = interest rate, %/100, n = useful life in years

The capital recovery factor equation above may be rewritten as:

Uniform Annual Disbursement = P(CR - i% - n)

Where (CR - i% - n) is the Capital Recovery Factor for i% interest taken over "n" years useful life.

Land Costs

Land-destined solid wastes require removal of land from other economic use. The amount of land so tied up will depend on the treatment/disposal method employed and the amount of wastes involved. Although land is non-depreciable according to IRS regulations, there are numerous instances where the market value of the land for land-destined wastes has been significantly reduced permanently, or actually becomes unsuitable for future use due to the nature of the stored waste. The general criteria applied to costing land are as follows:

(1) If land requirements for on-site treatment/disposal are not significant, no cost allowance is applied.
(2) Where on-site land requirements are significant and the storage or disposal of wastes does not affect the ultimate market value of the land, cost estimates include only interest on invested money.
(3) For significant on-site land requirements where the ultimate market value and/or availability of the land has been seriously reduced, cost estimates include both capital depreciation and interest on invested money.
(4) Off-site treatment/disposal land requirements and costs are not considered directly. It is assumed that land costs are included in the overall contractor's fees along with its other expenses and profit.
(5) In view of the extreme variability of land costs, adjustments have been made for individual industry situations. In general, isolated, plentiful land has been costed at $2,470/hectare ($1,000/acre).

Operating Expenses

Annual costs of operating the treatment/disposal facilities include labor, supervision, materials, maintenance, taxes, insurance and power and energy. Operating costs combined with annualized capital costs give the total costs for

treatment and disposal operations. No interest cost was included for operating (working) capital. Since working capital might be assumed to be one sixth to one third of annual operating costs (excluding depreciation), about 1-2 percent of total operating costs might be involved. This is considered to be well within the accuracy of the estimates.

Rationale for Representative Facilities

All facility costs are estimated for representative facilities rather than for any actual facility. Representative facilities are defined to have a size and age agreed upon by a substantial fraction of the manufacturers in the subcategory producing the given mineral, or, in the absence of such a consensus, the arithmetic average of production size and age for all facilities.

Location is selected to represent the industry as closely as possibly. For instance, if all facilities are in northeastern U.S., typical location is noted as "northeastern states". If locations are widely scattered around the U.S., typical location would be not specified geographically.

It should be noted that the unit costs to treat and dispose of hazardous wastes at any given facility may be considerably higher or lower than the representative facility because of individual circumstances.

Definition of Levels of Treatment and Control

Costs are developed for various types and levels of technology:

Minimum (or basic level). That level of technology which is equalled or exceeded by most or all of the involved facilities. Usually money for this treatment level has already been spent (in the case of capital investment) or is being spent (in the case of operating and overall costs).

B,C,D,E---Levels - Successively greater degrees of treatment with respect to critical pollutant parameters. Two or more alternative treatments are developed when applicable.

Rationale for Pollutant Considerations

(1) All non-contact cooling water is exempted from treatment (and treatment costs) provided that it is not contaminated by process water and no harmful pollutants are introduced.

(2) Water treatment, cooling tower and boiler blowdown discharges are not treated provided they are not contaminated by process water and contain no harmful pollutants.

(3) Removal of dissolved solids, other than harmful pollutants, is not included.

(4) Mine drainage treatments and costs are generally considered separately from process water treatment and costs. Mine drainage costs are estimated for all mineral categories for which such costs are a significant factor.

(5) All solid waste disposal costs are included as part of the cost development.

Cost Variances

The effects of age, location, and size on costs for treatment and control have been considered and are detailed in subsequent sections for each specific subcategory.

INDUSTRY STATISTICS

Below are summarized the estimated 1972 selling prices for the individual minerals of this report. These values were taken from minerals industry yearbooks and Bureau of Census publication.

mineral product	$/kkg ($/ton)
barite	18.10 (16.43)
fluorspar	76.07 (69.00)
borates	82.96 (75.25)
potash (K_2O equiv.)	37.49 (34.00)
natural soda ash	24.55 (22.27)
sodium sulfate	17.93 (16.26)
phosphate rock	5.62 (5.10)
rock salt	11.71 (10.62)
sulfur (Frasch)	18.79 (17.04)
mineral pigments	88.20 (80.00)
lithium minerals	withheld

INDIVIDUAL MINERAL WASTEWATER TREATMENT AND DISPOSAL COSTS

BARITE

Of the twenty-seven known significant U.S. facilities producing barite ore or ground barite, nine facilities use dry grinding operations, fourteen use log washing and jigging methods to prepare the ore for grinding, and four use froth flotation techniques.

DRY GRINDING OPERATION

There is no water used in dry grinding facilities, therefore there is no waste water, waste water treatment or treatment costs.

WASHING OPERATIONS

The ratio of barite product to wastes at the various facility vary greatly with ore quality, but in all cases there is a large amount of solid wastes for disposal. For several of the facilities in this subcategory only about 3 to 7 percent by weight of the ore is product. The remainder consists of rock and gravel, which are separated and recovered at the facility, and mud and clay tailings, which are sent as slurry to large settling and storage ponds.

In Missouri, where most of the washing operations are located, tailings ponds are commonly constructed by damming deep valleys. It is customary in log washing operations to build the initial pond by conventional earthmoving methods before the facility opens so that process water can be recycled. Afterwards the rock and gravel gangue are used by the facility to build up the dam on dikes to increase the pond capacity. This procedure provides a use for the gangue and also provides for storage of more clay and mud tailings. The clay and mud are used to seal the rock and gravel additions.

All facilities totally recycle process water except during periods of heavy rainfall when intermittent discharges occur. During these times of heavy rainfall, Missouri washing facilities experience varying amounts and frequencies of discharge depending on pond design and surrounding terrain.

A washing facility located in Nevada also uses tailings ponds with total recycle of waste water and no discharge at any time. The dry climate and the scarcity of water are the factors determining the feasibility of such operation.

In Table 9 are estimated costs for total recycle with discharge only in times of heavy rainfall and no treatment on discharged water, total recycle with discharge only in times of heavy rainfall and treatment of all discharged water, and total recycle with no discharge of process water any time.

Operations in dry climates (e.g. Nevada) would be expected to have treatment costs similar to Level A, even at no discharge level.

All facilities are currently at Level A or C. Some facilities use Level B treatment partially. The necessity and extent of such treatment depends on quality of water presently discharged. Level C is not achievable in unfavorable terrain. With favorable local terrain zero discharge of process water is achievable.

Cost Variance

Age. Known ages range from less than 1 to 19 years. Age was not found to be a significant factor in cost variance.

Location. Both geographical location and local terrain are significant factors in treatment costs. Western operations in dry climates can achieve no discharge at all times at a cost significantly below eastern operations. Costs vary significantly with local watersheds, elevations, and availability of suitable terrain for pond construction.

Size. Nine facilities in this subcategory have production rates ranging from 11,000 to 182,000 kkg/yr (12,100 to 200,000 tons/yr). The representative facility is 18,000 kkg/yr (20,000 tons/yr). Eight of the nine facilities have less than 30,000 kkg/yr production (33,000 tons/yr). The single large facility in this subcategory that was investigated is the western facility for which costs have been discussed earlier in this section.

For the eight eastern facilities, the cost variance of size over this range is estimated to be 0.9 exponential function for capital and its related annual costs, and directly proportional for operating costs other than taxes, insurance and capital recovery.

TABLE 9

COST FOR A REPRESENTATIVE PLANT
(ALL COSTS ARE CUMULATIVE)

SUBCATEGORY Barite (washing operations)

PLANT SIZE 18,000 METRIC TONS PER YEAR OF Barite

PLANT AGE 11 YEARS PLANT LOCATION Missouri or Nevada

		LEVEL				
		A (MIN)	B	C	D	E
INVESTED CAPITAL COSTS:						
TOTAL		180,000	260,000	265,000		
ANNUAL CAPITAL RECOVERY		21,150	30,500	31,100		
OPERATING AND MAINTENANCE COSTS:						
ANNUAL O & M (EXCLUDING POWER AND ENERGY)		10,000	16,400	13,600		
ANNUAL ENERGY AND POWER		10,000	10,000	11,000		
TOTAL ANNUAL COSTS		41,150	56,900	55,700		
COST/METRIC TON Barite		2.26	3.13	3.06		
WASTE LOAD PARAMETERS (mg/liter)	RAW WASTE LOAD					
Suspended solids		15-327*	25*	0		
Iron		0.04-8.4*	1.0*	0		
Lead		0.03-2.0*	0.1*	0		
pH		6-9*	6-9*	-		

*only discharged during periods of heavy rainfall

LEVEL DESCRIPTION:

A. Complete recycle except in times of heavy rainfall
B . A plus treatment of all discharged water with lime and flocculants
C. Complete recycle - no discharge at all times (ability to achieve this level depends on local terrain - not all plants are capable of attaining zero discharge)

Cost Basis For Table 9

Capital Costs

Pond cost, $/hectare ($/acre)		
(a) tailings ponds:	12,350	(5,000)
(b) clarification ponds:	7,400	(3,000)

Pond areas, hectares (acres)		
(a) tailings ponds:	8.1	(20)
(b) clarification ponds:	8.1	(20)

Pumps and pipes: $50,000

Operating and Maintenance Costs

Power unit cost:	$100/HP-yr
Pond maintenance:	2% of pond investment
Pump and piping maintenance:	6% of non-pond investment
Taxes and insurance:	2% of total investment
Flocculants:	$2.20/kg ($1.00/lb)
Lime:	$22/kkg ($20/ton)

FLOTATION OPERATIONS

Flotation is used on either beneficiated low grade ore or high-grade ore which is relatively free of sands, clays, and rocks. Therefore, they produce significantly less solid wastes (tailings) than washing operations, and consequently less cost for waste treatment.

Wastewater treatment is similar to that previously described for washing operations: pond settling and storage of tailings followed by recycle. Of the three facilities investigated in this category two are in the east and one in the west. The western facility achieves no discharge; the two eastern facilities do not.

Costs for waste water treatment for the barite flotation process are given in Table 10. Level A is currently achieved in the Nevada facility. Levels B and C represent technology used by present eastern operations. Level D is for projected no discharge at eastern operations. At eastern operations ability and costs to achieve no discharge depend on local terrain. Costs developed are for cases where favorable terrain makes achievement of no discharge possible.

TABLE 10

COST FOR A REPRESENTATIVE PLANT

(ALL COSTS ARE CUMULATIVE)

SUBCATEGORY Barite (flotation)

PLANT SIZE 70,000 METRIC TONS PER YEAR OF Barite

PLANT AGE 33 YEARS PLANT LOCATION Missouri, Nevada, Georgia

		LEVEL				
		A (MIN)	B (min)	C	D	E
INVESTED CAPITAL COSTS:						
TOTAL		150,000	200,000	250,000	310,000	
ANNUAL CAPITAL RECOVERY		17,600	23,480	31,600	36,400	
OPERATING AND MAINTENANCE COSTS:						
ANNUAL O & M (EXCLUDING POWER AND ENERGY)		6,000	7,000	12,000	11,400	
ANNUAL ENERGY AND POWER		10,000	15,000	15,000	15,000	
TOTAL ANNUAL COSTS		33,600	45,480	58,600	62,800	
COST/METRIC TON Barite		0.49	0.67	0.86	0.92	
WASTE LOAD PARAMETERS (mg/liter)	RAW WASTE LOAD					
Suspended Solids	<50,000	0	3-250	25	0	
pH	-	-	6-9	6-9	-	

LEVEL DESCRIPTION:

A. Pond settling of solids plus recycle of water to process; no discharge (western operation)

B. Pond settling of solids plus recycle of water to process; intermittent discharge; no chemical treatment for discharged water

C. B plus chemical treatment with lime and/or flocculating agent to adjust pH and reduce suspended solids

D. B plus additional pond capacity for total impoundment (requires favorable local terrain)

Cost Variance

Age. Ages for the three facilities ranged from 10 to 58 years. Age was not found to be a significant cost variance factor.

Location. Both geographical location and local terrain are significant cost variance factors. Western operations are able to achieve no discharge at treatment costs below those for intermittent discharge from eastern facilities. No known eastern facility currently achieves no discharge.

Size. The flotation facilities range from 33,600 to 91,000 kkg/yr (37,000 to 100,000 tons/yr). The representative facility is 70,000 kkg/yr (77,000 tons/yr). Treatment costs are essentially proportional to size in this range.

Cost Basis For Table 10

Capital Costs

Tailings pond cost, $/hectare ($/acre)	7,400	(3,000)
Pond area, hectares (acres):	20	(50)
Pumps and piping:	$50,000	
Chemical treatment facilities:	$50,000	

Operating and Maintenance Costs

Pond maintenance: 2% of pond investment
Taxes and insurance: 2% of total investment
Power - $100/HP-yr
Treatment Chemicals
    Lime: $22/kkg ($20/ton)
    Flocculating agent: $2.20/kg ($1/lb)

Mine Drainage

The mining of barite is a dry operation and the only water normally involved is from pit or mine drainage resulting from rainfall and/or ground seepage. Most mines do not have any discharge. Rainwater in open pits is usually allowed to evaporate. One known mine, however, has over 1.9×10^6 l/day (0.5 mgd) of acidic ground seepage and rainwater runoff. Lime neutralization and pond settling of suspended solids of this mine drainage costs an approximate $2 per kkg of barite produced ($1.8/ton). Most of this cost is for lime and flocculating agents.

Beneficiation of mined fluorspar ore is accomplished by heavy media separations and/or flotation operations. Although these technologies are used separately in some instances, generally beneficiation facilities employ both techniques.

HEAVY MEDIA SEPARATIONS

The primary purpose of heavy media separations is to provide an upgraded and preconcentrated feed for flotation facilities. Five of the six heavy media operations have no waste water discharge. The sixth facility uses a pond to remove suspended solids then discharges to surface water.

Wastewater treatment costs are given in Table 11. Level A technology is achieved by all facilities. Level B is currently achieved by 5 of the 6.

Cost Variance

Age. Ages for this subcategory range from 1 to 30 years. Age was not found to be a significant factor in cost variance.

Location. Facilities are located in the Illinois-Kentucky area and southwestern U.S. There are facilities with no process effluents in both locations. Location is not a significant factor in cost variance.

Size. The facilities having heavy media facilities range from 5,900 to 81,800 kkg/yr (6,500 to 90,000 tons/yr) production. The representative facility is 40,000 kkg/yr (45,000 tons/yr). Since thickeners are the major capital investment, capital costs are estimated to be 0.7 exponential function with size. Operating costs other than taxes, insurance and capital recovery are estimated to be directly proportional to size.

Cost Basis for Table 11

Capital Costs

Pond cost, $/hectare ($/acre):	7,400	(3,000)	
Pond size, hectares (acres):		4	(10)
Pumps and piping costs:		$20,000	
Thickeners:		$50,000	

TABLE 11

COST FOR A REPRESENTATIVE PLANT

(ALL COSTS ARE CUMULATIVE)

SUBCATEGORY Fluorspar (heavy media)

PLANT SIZE 40,000 METRIC TONS PER YEAR OF fluorspar

PLANT AGE 8 YEARS PLANT LOCATION Midwest

		LEVEL				
		A (MIN)	B	C	D	E
INVESTED CAPITAL COSTS:						
TOTAL		50,000	70,000			
ANNUAL CAPITAL RECOVERY		5,850	8,200			
OPERATING AND MAINTENANCE COSTS:						
ANNUAL O & M (EXCLUDING POWER AND ENERGY)		7,050	8,250			
ANNUAL ENERGY AND POWER		2,500	5,000			
TOTAL ANNUAL COSTS		15,400	21,450			
COST/METRIC TON fluorspar		0.38	0.52			
WASTE LOAD PARAMETERS (kg/metric ton of fluorspar)	RAW WASTE LOAD					
Suspended solids	340	0.13	0			
Dissolved Fluoride	0.04	0.04	0			
Lead	-	0.0002	0			
Zinc	-	0.0012	0			
pH	-	6-9	0			

LEVEL DESCRIPTION:

A. Spiral classifier followed by small pond with discharge
B. Thickener plus total recycle

Operating and Maintenance Costs

Pond maintenance: 2% of pond investment
Pumps and piping maintenance: 6% of investment
Pond cleaning: 15,000 ton/yr @ $.35/ton
Power: $100/HP-yr

FLOTATION SEPARATIONS

Wastewater from flotation processes are more difficult and costly to treat and dispose of than those from heavy media separation. The bulk of the solid wastes from the ore are discharged from the flotation process. Flotation chemicals probably interfere with settling of suspended solids and fluoride contents are higher than in the heavy media process.

Cost estimates for waste water treatment from a representative flotation facility are given in Table 12. Level A is typical of Kentucky-Illinois area waste water treatment. Level B represents costs for planned future treatment for these operations, Level C represents treatment technology used for municipal water, but not currently used for any fluorspar waste water.

Cost Variances

Age. In the fluorspar flotation category facility ages range from 1 to 35 years. Age has not been found to be a significant factor in cost variance of treatment options.

Location. Both geographical location and local terrain are significant cost variance factors. Dry climate western operations can achieve no discharge at lower costs than midwestern operations can meet normal suspended solids levels in their discharges.

Size. Facility sizes range from 13,600 to 63,600 kkg/yr (15,000 to 70,000 tons/yr). The representative facility size is 40,000 kkg/yr (45,000 tons/yr). The cost variance with size over this range is estimated to be a 0.9 exponential function for capital and its related annual costs, and directly proportional for operating costs other than taxes, insurance, and capital recovery.

TABLE 12

COST FOR A REPRESENTATIVE PLANT

(ALL COSTS ARE CUMULATIVE)

SUBCATEGORY Fluorspar (flotation)

PLANT SIZE 40,000 METRIC TONS PER YEAR OF fluorspar

PLANT AGE 15 YEARS PLANT LOCATION Midwest

		LEVEL				
		A (MIN)	B	C	D	E
INVESTED CAPITAL COSTS:						
TOTAL		130,000	185,000	185,000		
ANNUAL CAPITAL RECOVERY		15,300	21,700	21,700		
OPERATING AND MAINTENANCE COSTS:						
ANNUAL O & M (EXCLUDING POWER AND ENERGY)		24,600	53,700	69,700		
ANNUAL ENERGY AND POWER		8,000	10,000	10,000		
TOTAL ANNUAL COSTS		47,900	85,400	101,400		
COST/METRIC TON of product		1.20	2.14	2.54		
WASTE LOAD PARAMETERS (kg/metric ton of product)	RAW WASTE LOAD					
Suspended solids	2,000	5-35	0.3-0.6	0.2-0.4		
Dissolved fluoride	0.05-0.2	0.05-0.2	0.05-0.2	0.05-0.1		

LEVEL DESCRIPTION:

A - pond settling and discharge

B - A plus treatment with flocculants

C - A plus alum treatment

Cost Basis For Table 12

Capital Costs

Pond cost, $/hectare ($/acre): 12,350 (5,000)
Pond size, hectares (acres): 10 (25)

Operating and Maintenance Costs

Labor:	$5.00/hr
Power:	$100/HP-yr
Taxes and insurance:	2% of investment
Flocculating chemicals:	$2.20/kg ($1/lb)
Lime:	$22/kkg ($20/ton)
Alum:	$55/kkg ($50/ton)

FLUORSPAR DRYING AND PELLETIZING PLANTS

There are three significant fluorspar drying facilities. Two of these facilities are dry operations. The third has a wet scrubber but treats the effluent as part of HF production wastes. Pelletizing facilities are also dry operations.

MINE DRAINAGE

Fluorspar mines often have significant drainage. Normally the fluoride content is 3 mg/l or less and suspended solids are low. Even when higher concentrations of suspended solids are present, settling in ponds is reported to be rapid. Cost for removing these solids are estimated to be $0.01 to $0.05 per kkg or ton of fluorspar produced.

SALINES FROM BRINE LAKES

The extraction of several mineral products from lake brines is carried out at two major U.S. locations: Searles Lake in California and Great Salt Lake in Nevada. Also lithium carbonate is extracted at Silver Peak, Nevada. The only wastes are depleted brines which are returned to the brine sources. There is no discharge of waste water, no waste water treatment and no treatment costs.

BORATES

The entire U.S. production of borax is carried out in the desert areas of California by two processes: the mining and extraction of borax ore and the trona process. The latter is covered in the section on salines from lake brines. The trona process has no waste water treatment or treatment costs since all residual brines are returned to the source. The mining and extraction process, which accounts for about three-fourths of the estimated U.S. production of borax, has waste water which is evaporated in ponds.

Mining and Extraction Process

All waste water is evaporated in ponds at this facility. There is no discharge to surface water. Costs for the ponding treatment and disposal are given in Table 13. Since there is only one facility, minimum treatment and no discharge treatment costs are identical.

Cost Variance

Since there is only one facility, age, location and size are not significant cost variance factors.

Cost Basis for Table 13

<u>Capital Costs</u>

Pond cost, $/hectare ($/acre): 20,000 (8,000)
Pond area, hectares (acres): 100 (250)
Pumps and piping: $500,000

<u>Operating and Maintenance Costs</u>

Pond maintenance: 2% of pond investment
Pump and piping maintenance: 6% of pump and piping investment
Power: $100/HP-yr
Taxes and insurance: 2% of total investment

TABLE 13

COST FOR A REPRESENTATIVE PLANT

(ALL COSTS ARE CUMULATIVE)

SUBCATEGORY Borates

PLANT SIZE 1,000,000 METRIC TONS PER YEAR OF Borates

PLANT AGE 17 YEARS PLANT LOCATION California

		LEVEL				
		A (MIN)	B	C	D	E
INVESTED CAPITAL COSTS:						
TOTAL		2,500,000				
ANNUAL CAPITAL RECOVERY		293,500				
OPERATING AND MAINTENANCE COSTS:						
ANNUAL O & M (EXCLUDING POWER AND ENERGY)		120,000				
ANNUAL ENERGY AND POWER		30,000				
TOTAL ANNUAL COSTS		443,500				
COST/METRIC TON Borates		0.44				
WASTE LOAD PARAMETERS (kg/metric ton of Borates)	RAW WASTE LOAD					
Solid wastes (insol.)	800	0				
Soluble wastes	2.5	0				

LEVEL DESCRIPTION:

A - evaporation of all wastewater in ponds.

Potash is produced in four different locations by four different processes, all of which are in dry climate areas of the western U.S.

Two processes, involving lake brines, have no waste water. All residual brines are returned to the lake. There are no treatment costs.

The third process, dry mining followed by wet processing to separate potash from sodium chloride and other wastes, utilizes evaporation ponds for attaining no discharge or waste water. This process and its waste water are described in Section V, under Carlsbad Operations. Treatment costs are given in Table 14.

The fourth process, described in Section V under Moab Operations, involves solution mining followed by wet separations. This process also has no discharge of waste water. Treatment costs are given in Table 15.

Cost Variance

Age. Age is not a cost variance factor.

Location. All facilities are located in dry western geographical locations. Location is not a significant factor on costs.

Size. Known facility sizes range from 450,000 to 665,000 kkg/yr (500,000 to 730,000 tons/yr) for Carlsbad Operations. There is only one facility in the Moab Operations category.

There is no significant cost variance factor with size for the Moab or Carlsbad Operations subcategories.

Cost Basis for Table 14

Capital Costs

Pond cost, $/hectare ($/acre): 2,470 (1,000)
Evaporation pond area, hectares (acres): 121 (300)
Pumps and piping: $100,000

Operating and Maintenance Costs

Maintenance, taxes and insurance: 4% of investment
Power: $100/HP-yr

TABLE 14

COST FOR A REPRESENTATIVE PLANT

(ALL COSTS ARE CUMULATIVE)

SUBCATEGORY Potash (Carlsbad Operations)

PLANT SIZE 500,000 METRIC TONS PER YEAR OF Potash

PLANT AGE 30 YEARS PLANT LOCATION New Mexico

		LEVEL				
		A (MIN)	B	C	D	E
INVESTED CAPITAL COSTS:						
TOTAL		400,000				
ANNUAL CAPITAL RECOVERY		47,000				
OPERATING AND MAINTENANCE COSTS:						
ANNUAL O & M (EXCLUDING POWER AND ENERGY)						
ANNUAL ENERGY AND POWER		8,000				
TOTAL ANNUAL COSTS		71,000				
COST/METRIC TON Potash		0.14				
WASTE LOAD PARAMETERS (kg/metric ton of Potash)	RAW WASTE LOAD					
Sodium chloride	0-3750	0				
Clays	15-235	0				
Magnesium sulfate	0-640	0				
Potassium sulfate	0-440	0				
Potassium chloride*	0-318	0				

*as brine

LEVEL DESCRIPTION:

A - Evaporation ponds

TABLE 15

COST FOR A REPRESENTATIVE PLANT

(ALL COSTS ARE CUMULATIVE)

SUBCATEGORY Potash (Moab Operations)

PLANT SIZE 200,000 METRIC TONS PER YEAR OF Potash

PLANT AGE 10 YEARS PLANT LOCATION Utah

		LEVEL				
		A (MIN)	B	C	D	E
INVESTED CAPITAL COSTS:						
TOTAL		350,000				
ANNUAL CAPITAL RECOVERY		56,950				
OPERATING AND MAINTENANCE COSTS:						
ANNUAL O & M (EXCLUDING POWER AND ENERGY)		45,000				
ANNUAL ENERGY AND POWER		5,000				
TOTAL ANNUAL COSTS		106,950				
COST/METRIC TON potash		0.53				
WASTE LOAD PARAMETERS (kg/metric ton of potash)	RAW WASTE LOAD					
Sodium chloride	640	0				

LEVEL DESCRIPTION:

A - Holding pond plus on-land evaporation

Cost Basis for Table 15

Capital Costs

Dam for canyon: $100,000
Pumps and piping: $250,000

Operating and Maintenance Costs

Labor: $10,000
Maintenance: 8% of investment
Taxes and insurance: 2% of investment
Power: $100/HP-yr

TRONA

All U.S. mining of trona ore is in the vicinity of Green River, Wyoming. There are four mining facilities, three of which also process ore to pure sodium carbonate (soda ash). The fourth facility has only mining operations at this time. Wastewater from these operations come from mine drainage, ground water and process water.

PROCESS WATER

Of the three processing facilities, two have no discharge of process water and one does. Plans are under way at this one facility to eliminate process water discharge. Table 16 gives cost estimates for both treatment levels for the hypothetical representative facility.

Cost Variance

Age. The ages of the three processing facilities range from 6 to 27 years. Age was not found to be a significant factor in cost variance.

Location. All facilities are located in sparsely populated areas close to Green River, Wyoming. Geographical location is not a significant cost variance factor. Local terrain variations are a factor. Some desired or existing pond locations give seepage and percolation problems; others do not. The costs to control seepage or percolation in an area with unfavorable underlying strata can be considerably more than the original installation cost of a pond in an area with no seepage problems. The costs developed in Table 16 are valid for locations with minor pond seepage problems, which at present is the typical case. For locations with bad seepage problems, the costs of an interceptor trench to an impermeable strata plus back-pumping should be added.

Size. Based on 1973 soda ash production figures, the three processing facilities are roughly of the same size. All of these facilities are substantially increasing their output over a period of time. Size is not a significant factor in cost variance from facility-to-facility.

TABLE 16

COST FOR A REPRESENTATIVE PLANT

(ALL COSTS ARE CUMULATIVE)

SUBCATEGORY Trona Ore Mining & Refining (Process Water)

PLANT SIZE 1,000,000 METRIC TONS PER YEAR OF Soda Ash

PLANT AGE 15 YEARS PLANT LOCATION Wyoming

		LEVEL				
		A (MIN)	B	C	D	E
INVESTED CAPITAL COSTS:						
TOTAL		1,500,000	2,400,000			
ANNUAL CAPITAL RECOVERY		176,100	282,100			
OPERATING AND MAINTENANCE COSTS:						
ANNUAL O & M (EXCLUDING POWER AND ENERGY)		102,000	160,000			
ANNUAL ENERGY AND POWER		80,000	100,000			
TOTAL ANNUAL COSTS		358,100	542,000			
COST/METRIC TON soda ash		0.36	0.54			
WASTE LOAD PARAMETERS (kg/metric ton of soda ash)	RAW WASTE LOAD					
Suspended Solids	5	0.005	0			
Dissolved Solids	35	0.06	0			

LEVEL DESCRIPTION:

A — Evaporation ponds with small discharge
B — Evaporation ponds with no discharge

Cost Basis for Table 16

Capital Costs

Pond cost, $/hectare ($/acre): 7,400 (3,000)
Pond area, hectares (acres)
Level A: 162 (400)
Level B: 271 (670)
Pumps and piping
Level A: $300,000
Level B: $400,000

Operating and Maintenance Costs

Pond maintenance: 2% of pond investment
Pump and piping maintenance: 6% of pond investment
Taxes and insurance: 4% of total investment
Power: $100/HP-yr

MINE DRAINAGE

All of the four mines have some drainage. The average flow mines is 0.64 x 10^6 l/day (0.17 mgd). This is approximately 10 percent of average process water and is estimated on this basis to cost $0.01 to $0.05 per kkg or ton of soda ash produced for ponding and evaporative treatment. One facility currently has an unusually high mine pumpout volume, 1.8 x 10^6 l/day (0.43 mgd). The costs to contain and evaporate this amount is proportionately higher.

GROUND WATER AND RUNOFF WATER

Ground water and runoff water is also led to collection ponds where settling and substantial evaporation take place. On the basis of known information no meaningful cost estimate can be made, since the amounts are extremely variable and, nevertheless, small compared to the process water volume.

SODIUM SULFATE

Sodium sulfate is produced from natural sources in three different geographical areas by three different processes:

(1) Recovery from Great Salt Lake brine;
(2) Recovery from Searles Lake brines;
(3) Recovery from west Texas brines.

Processes (1) and (2) have been discussed under <u>Salines by Brine Lake Mining</u> and have no waste water treatment or treatment costs. All residual brines are returned to the lakes. Process (3) has waste water which is percolated and evaporated in existing mud flat lakes. There is no treatment construction. The waste water flows to the mud lake by gravity. Costs are almost negligible (estimated as $0.01 to $0.05 per metric ton or short ton of sodium sulfate produced).

ROCK SALT

This study covers those facilities primarily engaged in mining, crushing and screening rock salt. Some of these facilities also have evaporation operations with a common effluent.

Mining, Crushing and Screening Operations

The waste water from mining, crushing and screening operations consists primarily of a solution of varying sodium chloride content which comes from one or more of the following sources:

(1) wet dust collection in the screening and sizing step;
(2) washdown of miscellaneous spills in the operating area and dissolving of the non-saleable fines;
(3) seepage from mine shafts.

Wastewater volumes are usually fairly small, less than 500,000 l/day (130,000 gal/day), and are handled in various ways, including well injection and surface disposal. Well injection costs for minewater drainage are estimated to be in the range of $0.01 to $0.05 per kkg or short ton of salt produced. Surface disposal is costed in Table 17. Most often there is no treatment of the miscellaneous saline waste water associated with this subcategory. Some facilities use settling ponds to remove suspended solids prior to discharge. In the event that land is not available for ponds, costs for alternate technology using clarifiers instead of ponds are given in Level C.

Cost Variance

Age, location, and size are not significant factors in cost variance.

Cost Basis For Table 17

<u>Capital Costs</u>

Pond cost, $/hectare ($/acre): 49,000 (20,000)
Pond size, hectares (acres): 0.2 (0.5)
Pumps and piping cost: $5,000
Clarifier: $35,000

TABLE 17

COST FOR A REPRESENTATIVE PLANT

(ALL COSTS ARE CUMULATIVE)

SUBCATEGORY Rock Salt (Mining, Crushing and Screening)

PLANT SIZE 1,000,000 METRIC TONS PER YEAR OF salt

PLANT AGE 30 YEARS PLANT LOCATION Eastern United States

		LEVEL				
		A (MIN)	B	C	D	E
INVESTED CAPITAL COSTS:						
TOTAL		0	15,000	50,000		
ANNUAL CAPITAL RECOVERY		0	1,760	8,150		
OPERATING AND MAINTENANCE COSTS:						
ANNUAL O & M (EXCLUDING POWER AND ENERGY)		0	700	3,000		
ANNUAL ENERGY AND POWER		0	500	3,000		
TOTAL ANNUAL COSTS		0	2,960	13,150		
COST/METRIC TON salt		0	<0.01	0.01		
WASTE LOAD PARAMETERS (kg/metric ton of salt)	RAW WASTE LOAD					
Suspended solids	0-0.9	0-0.9	0.009	0.009		

LEVEL DESCRIPTION:

A — No wastewater treatment
B — Pond settling of suspended solids followed by discharge
C — Clarifier removal of suspended solids followed by discharge

Operating and Maintenance

Pond maintenance: 2% of pond investment
Pump and piping maintenance: 10% of pump and piping investment
Power: $100/HP-yr
Taxes and insurance: 2% of total investment.

PHOSPHATE ROCK

Phosphate ore is mined in four different regions of the U.S.:

Florida:	78% of production
North Carolina:	5% of production
Tennesse:	5% of production
Western States:	12% of production

For purposes of waste water treatment technology and costs categorization the above production may be separated into two subcategories: eastern operations and western operations.

EASTERN OPERATIONS

The beneficiation of phosphate ore involves large wastewater effluents. In addition, there are large quantities of solid wastes. Raw wastes, sand, and small particle sized slimes, suspended in the process effluents, exceed the quantity of phosphate product. Essentially two waste water streams come from the process: sand tailings stream and a slimes stream. The sand tailings settle rapidly for use in land reclamation. The water from this stream can then be recycled. Slimes, on the other hand, settle fairly rapidly but only compact to 10-20 percent solids. This soft, non-weight-bearing mud ties up both massive quantities of water and volumes of retention ponds. Most of the process waste water treatment costs are also tied up in the construction of these slime ponds. Massive dams and dikes are constructed around these ponds. All mine and beneficiating facilities practice complex water control and reuse. The extent of control and reuse depends on many factors, including:

(1) topography
(2) mine-beneficiating facility waste pond layouts
(3) age of facilities
(4) fresh water availability
(5) regulations
(6) level of technology employed
(7) cost.

Most water discharges are intermittent; heavy during the wet season (3-6 months/yr), slight or non-existent during dry seasons (6-9 months/yr). Water discharged during the wet season due to insufficient storage capacity could be used during the dry season, if available.

Since water control fundamentally involves storage and transport (pumping) operations, by construction of additional storage pond and piping and pumping facilities almost any degree of process waste water control may be achieved up to and including closed cycle. No discharge of process water involves two premises:

(1) Only process water is contained. Mine drainage is isolated and used as feed water or treated (if needed) and discharged separately. Rainwater runoff is also treated separately, if needed.

(2) Evaporation-rainfall imbalances are more than counter-balanced by water losses in slime ponds. Slime ponds are essentially water accumulation ponds where water is removed from recycle by holdup in the slimes.

All costs are for treatment and storage of suspended solids. There is no treatment applied specifically for fluorides or phosphates although existing treatment will result in a degree of removal of these pollutants. Table 18 gives costs for three levels of treatment technology. All facilities use Level A technology, and most use some degree of Level B technology. Level C technology is currently not used. All discharged wastes are expressed in concentrations, since volume of wastewater discharges from the facilities vary widely depending on age, terrain, local rainfall, and water control practice. Most facilities currently achieve less than 30 mg/l suspended solids at Level A. Those that do not would be expected to have the additional expenditures of Level B to reach 30 mg/l suspended solids.

Cost Variance

Age. Facilities representing the eastern phosphate rock subcategory range in age from 3 to 37 years. Age was not found to be significant factor in cost variance.

Location. Operations are located in Florida, North Carolina and Tennessee. Pond construction is different in Tennessee, which is hilly, than in flat areas such as Florida and North Carolina. Flat area facilities have diked ponds while in Tennessee facilities use dammed valleys. A comparison indicates that construction costs are approximately the same for both areas and location is not a significant factor in cost variance.

Size. The facilities in the eastern subcategory range in size from 46,300 to 4,090,000 kkg/yr (51,000 to 4,500,000 tons/yr). The representative facility is 2,000,000 kkg/yr (2,200,000 tons/yr). The cost variance with size is estimated to be a 0.9 exponential function for

TABLE 18

COST FOR A REPRESENTATIVE PLANT

(ALL COSTS ARE CUMULATIVE)

SUBCATEGORY Phosphate Rock (Eastern)

PLANT SIZE 2,000,000 METRIC TONS PER YEAR OF product

PLANT AGE 15 YEARS PLANT LOCATION Florida-North Carolina-Tennessee

		LEVEL				
		A (MIN)	B	C	D	E
INVESTED CAPITAL COSTS:						
TOTAL		8,000,000	8,650,000	12,000,000		
ANNUAL CAPITAL RECOVERY		804,000	910,000	1,560,000		
OPERATING AND MAINTENANCE COSTS:						
ANNUAL O & M (EXCLUDING POWER AND ENERGY)		360,000	389,000	429,000		
ANNUAL ENERGY AND POWER		240,000	300,000	335,000		
TOTAL ANNUAL COSTS		1,404,000	1,599,000	2,324,000		
COST/METRIC TON product		0.70	0.80	1.16		
WASTE LOAD PARAMETERS (mg/liter)	RAW WASTE LOAD --					
Suspended Solids		3-560	<30	0		
Dissolved Fluoride		2*	2*	0		
Phosphorus (total)		4*	4*	0		

*Estimated average values.

LEVEL DESCRIPTION:

A — Pond treatment of slimes and sand tailings
B — A plus improved process water segregation
C — Pond treatment plus impoundment of all process water

capital and its related annual costs, and directly proportional for operating costs other than taxes, insurance and capital recovery.

Cost Basis For Table 18

Capital Costs

Pond cost, $/hectare ($/acre): 17,300 (7,000)
Pond area, hectares (acres): 400 (1,000)
Pumps and piping: $1,000,000

Operating and Maintenance Costs

Labor and maintenance: 2.5% of total investment
Taxes and insurance: 2% of total investment
Power: $100/HR-yr

WESTERN OPERATIONS

Because of the favorable rainfall-evaporation balance existing for western phosphate mines and processing facilities, all facilities are either at the no discharge level or can be brought to this level. Of six operating areas, five have no discharge.

Table 19 gives cost of waste water treatment technology for western operation.

Cost Variance

Age. The six western operations range in age from 6 to 27 years. Age was not found to be a significant cost variance factor.

Location. All facilities in this subcategory are located in Idaho, Wyoming and Utah. Location is not a significant cost variance factor.

Size. Facilities in this subcategory range in size from 296,000 to 909,000 kkg/yr (326,000 to 1,000,000 tons/yr). The representative facility is 500,000 kkg/yr (550,000 tons/yr). Over this range of sizes, capital costs variance can be estimated by an exponent of 0.9 to size and operating costs other than capital recovery, taxes and insurance are approximately proportional to size.

TABLE 19

COST FOR A REPRESENTATIVE PLANT

(ALL COSTS ARE CUMULATIVE)

SUBCATEGORY Phosphate Rock

PLANT SIZE 500,000 METRIC TONS PER YEAR OF product

PLANT AGE 10 YEARS PLANT LOCATION Idaho-Utah

		LEVEL				
		A (MIN)	B	C	D	E
INVESTED CAPITAL COSTS:						
TOTAL		850,000	1,250,000			
ANNUAL CAPITAL RECOVERY		93,500	140,500			
OPERATING AND MAINTENANCE COSTS:						
ANNUAL O & M (EXCLUDING POWER AND ENERGY)		38,500	56,500			
ANNUAL ENERGY AND POWER		50,000	75,000			
TOTAL ANNUAL COSTS		182,000	272,000			
COST/METRIC TON product		0.36	0.54			
WASTE LOAD PARAMETERS (kg/metric ton of product)	RAW WASTE LOAD					
Suspended solids	1700	<0.05	0			
Fluoride (as ion)	-	<0.001	0			
Phosphorus (total)	-	<0.001	0			

LEVEL DESCRIPTION:

A — Thickener plus evaporation ponds; discharge of residual to surface water

B — Level A plus additional evaporation ponds to give no discharge.

Cost Basis For Table 19

Capital Costs

Pond costs, $/hectare ($/acre): 4,900 (2,000)
Pond size , hectares (acres): 100 (250)
Thickener: $200,000
Pumps and piping: $150,000

Operating and Maintenance Costs

Labor and maintenance: 2.5% of investment
Power: $100/HP-yr
Taxes and insurance: 2% of investment

MINE DRAINAGE

The high water table plus the heavy seasonal rainfall in most of the eastern mining areas usually causes the mining pits to collect water. Whenever feasible, mine drainage is used for slurrying phosphate matrix to the beneficiation process. When this is not possible, drainage can be pumped into other mined out pits. Mine drainage involves primarily on-property water control. Any that is may be expected to be treated as waste water. Treatment costs are roughly estimated at $0.01 to $0.05 per kkg or ton of product.

SULFUR (FRASCH PROCESS)

There are two subcategories of sulfur mining:

(1) anhydrite deposit mining;
(2) on-shore salt dome mining;

ANHYDRITE DEPOSIT MINING

The following is a comparison of waste water from mining of sulfur from anhydrite deposits to that from mining of salt dome deposits:

(1) The porous structure of anhydrite deposits absorbs more of the injected water and reduces the amount of bleedwater.

(2) Since the anhydrite deposits are not filled with salt, bleedwater is lower in dissolved solids than the average for salt dome bleedwater. Anhydrite mines recycle this bleedwater to the formation.

(3) The location of anhydrite mines is in western Texas where the dry climate makes it possible to evaporate waste water. Salt dome mines are in Louisiana and east Texas which have more rainfall.

Treatment and cost options are developed in Table 20 for complete recycle of anhydrite deposit mining bleedwater. Since both anhydrite deposit mines are now accomplishing this level, the costs also represent minimum level treatment technology.

Most of the costs in Table 20 are for water treatment chemicals for the recycled bleedwater.

Cost Variance

Age. The anhydrite deposit mining subcategory consists of two facilities, 5 and 7 years of age. Age is not a significant cost variance factor.

Location. Both facilities are located in western Texas. Location is not a significant cost variance factor.

Size. Based on water treatment costs supplied by both facilities, size in existing facilities is not a significant cost variance factor.

TABLE 20

COST FOR A REPRESENTATIVE PLANT

(ALL COSTS ARE CUMULATIVE)

SUBCATEGORY Sulfur (Anhydrite Deposit Mining)

PLANT SIZE 1,000,000 METRIC TONS PER YEAR OF sulfur

PLANT AGE 6 YEARS PLANT LOCATION Western Texas

		LEVEL				
		A (MIN)	B	C	D	E
INVESTED CAPITAL COSTS:						
TOTAL		550,000				
ANNUAL CAPITAL RECOVERY		90,000				
OPERATING AND MAINTENANCE COSTS:						
ANNUAL O & M (EXCLUDING POWER AND ENERGY)		705,000				
ANNUAL ENERGY AND POWER		30,000				
TOTAL ANNUAL COSTS		825,000				
COST/METRIC TON sulfur		0.83				
WASTE LOAD PARAMETERS (kg/metric ton of sulfur)	RAW WASTE LOAD					
Water softener sludge	12.5					
Suspended solids	-	0				
Dissolved solids	21.5-43.2	0				

LEVEL DESCRIPTION:

A — Recycle of all bleedwater, use of on-site evaporative disposal of water softener sludges.

Cost Basis For Table 20

Capital Costs

Water treatment installations:	$300,000
Thickeners and evaporation ponds:	$100,000
Pumps and piping:	$150,000

Operating and Maintenance Costs

Bleedwater volume, l/day (mgd): 18.9×10^6 (5.0)
Bleedwater treatment, $/1,000 liters (gallons): $0.09 ($0.35)
Energy and power costs supplied by facility 2020

ON-SHORE SALT DOME MINING

There are nine facilities in the U.S. producing sulfur from on-shore salt dome operations. The wide variability of bleedwater quantity per ton of sulfur produced has been taken into account by expressing all pollutants in terms of concentration rather than weight units.

Cost-benefit analyses for on-shore salt dome sulfur facilities are given in Table 21. Several companies are using (or have used) Level A technology, at least one uses Level B as part of their treatment and process, one uses Level C, five use Level D, one uses Level E, one Level F and no one currently uses Level G. Level G is included for two purposes:

(1) to show the costs for complete oxidation of all sulfides, in the bleedwater to sulfates, and

(2) to show that once the bulk of the oxidation has been achieved by other means, chemical treatment with chlorine for removal of the small residual oxygen demand may be the most practical approach.

Cost Variance

Age. The on-shore salt dome sulfur mining subcategory consists of 9 facilities ranging in age from 6 to 45 years. Age is not a significant cost variance factor.

Location. All facilities are located in eastern Texas and Louisiana. Geographical location is a significant cost variance factor only in that lengthy ditches (up to 37 km or 22 miles) often had to be dug to get the bleedwater discharge to suitable surface water. All facilities now have such outlets. New facilities in this subcategory would have to make such provisions, quite likely at major expense.

TABLE 21

COST FOR A REPRESENTATIVE PLANT

(ALL COSTS ARE CUMULATIVE)

SUBCATEGORY Sulfur (Salt Dome, On-Shore)

PLANT SIZE 500,000 METRIC TONS PER YEAR OF sulfur

PLANT AGE 26 YEARS PLANT LOCATION Louisiana-East Texas

		LEVEL						
		A (MIN)	B	C	D	E	F	G
INVESTED CAPITAL COSTS:								
TOTAL		50,000	50,000	1,540,000	3,200,000	1,500,000	3,000,000	20,000
ANNUAL CAPITAL RECOVERY		5,870	5,870	250,000	375,700	176,000	488,000	3,200
OPERATING AND MAINTENANCE COSTS:								
ANNUAL O & M (EXCLUDING POWER AND ENERGY)		2,500	5,000	145,000	102,000	300,000	415,000	3,400,000
ANNUAL ENERGY AND POWER		1,000	20,000	10,000	10,000	100,000	25,000	1,000
TOTAL ANNUAL COSTS		9,370	30,870	405,500	488,400	570,000	928,000	3,404,000
COST/METRIC TON sulfur		0.02	0.06	0.81	0.98	1.15	1.86	6.80
WASTE LOAD PARAMETERS	RAW WASTE LOAD							
Sulfide, mg/liter	600-1000	500	200-400	<5	<10	<5	<5	0
BOD, mg/liter	600-1000	500	200-400	5	10	10	400	0
COD, mg/liter	600-1000	500	200-400	50	<100	50	500	0
Suspended solids, mg/liter	< 50	<50	<50	<50	<50	<50	30	<50

LEVEL DESCRIPTION:

A — Flushing of hydrogen sulfide from bleedwater
B — Spray aeration
C — Flue gas stripping reaction plus ponding
D — Large oxidation and settling ponds
E — Aeration in small ponds followed by mixing of partially treated bleedwater with 10-20 times its volume of oxygen-containing water
F — Chemical treatment with sulfurous acid
G — Chemical treatment with chlorine

Size

The nine facilities in this subcategory range from 150,000 to 1,270,000 kkg/yr (165,000 to 1,400,000 tons/yr). The representative facility is 500,000 kkg/yr (550,000 tons/yr). The capital costs over this size range are estimated to be an 0.8 exponential function of size for process equipment treatment facilities such as Levels C and F, 0.9 exponential for mixed facilities such as Level E and directly proportional to size for Level D pond treatment. Operating costs other than taxes, insurance and capital recovery are estimated to be proportional to size.

Relative Bleedwater Volume

The costs are assumed to be directly proportional to the bleedwater volume per unit of production. Exclusive of sea water dilution, the range of relative bleedwater volumes found was 6,900 to 22,100 l/kkg (1,700 to 5,300 gal/ton).

Cost Basis For Table 21

Capital Costs

Capital costs for Levels C through F of Table 23 were taken from industry supplied values and adjusted for size.

Level G is based on 500 mg/l of sulfides in 18.9 x 10^6 l/day (5 mgd of bleedwater).

Operating and Maintenance Costs

Operating and maintenance costs for Levels C through F of Table 21 were taken from industry supplied values.

Chlorine costs for Level G, $/kkg ($/ton): 110 (100)

Off-Shore Salt Dome Mining

There is only one operational off-shore salt dome facility. Bleedwater is directly discharged without treatment into the Gulf of Mexico. Dissolved methane gas occurring naturally in the bleedwater provides initial turbulent mixing of bleedwater and sea water. Dissolved oxygen in the sea water reacts with the sulfides present.

Current treatment (none) and two additional treatment technologies and their estimated costs are given in Table 22. Level A represents present technology; Level B is piping of all bleedwater to shore (10 miles away) followed by on-shore ponding treatment; Level C is off-shore chemical treatment of sulfides with chlorine. Level B is predicated

TABLE 22

COST FOR A REPRESENTATIVE PLANT

(ALL COSTS ARE CUMULATIVE)

SUBCATEGORY Sulfur (Off-Shore Salt Dome)

PLANT SIZE 1,000,000 METRIC TONS PER YEAR OF sulfur

PLANT AGE 14 YEARS PLANT LOCATION Off-Shore Louisiana

		LEVEL				
		A (MIN)	B	C	D	E
INVESTED CAPITAL COSTS:						
TOTAL		0	13,750,000	7,920,000		
ANNUAL CAPITAL RECOVERY		0	2,237,000	1,288,600		
OPERATING AND MAINTENANCE COSTS:						
ANNUAL O & M (EXCLUDING POWER AND ENERGY)		0	1,385,000	6,212,000		
ANNUAL ENERGY AND POWER		0	200,000	100,000		
TOTAL ANNUAL COSTS		0	3,822,000	7,600,600		
COST/METRIC TON sulfur		0	3.82	7.60		
WASTE LOAD PARAMETERS (kg/metric ton of sulfur)	RAW WASTE LOAD					
Suspended Solids	0.3	0.3	0.2	0.2		
Sulfides	5.5	5.5	0.03	0.03		
COD	11	11	0.3	0.3		

LEVEL DESCRIPTION:

A — Use of oxygen in seawater to oxidize sulfides

B — All bleedwater pumped to shore followed by on-shore ponding and mixing with ambient water to oxidize sulfides

C — Off-shore chemical oxidation of sulfides with chlorine

on right-of-way and land availability, which has yet to be established, for pipeline and pond construction. Level C technology is not currently utilized in any existing sulfur production facility. In view of the high attendant costs and questionable feasibility of both additional treatment technology options, present treatment technology is believed to be the best economically achievable.

Cost Variance

For the single facility, age, geographical location and size variances are not applicable within this subcategory.

Cost Basis For Table 22

Capital Costs

Pumps and piping:	$10,200,000
Land cost, $/hectare ($/acre):	12,300 (50,000)
Land area, hectares (acres):	40 (100)
Pond cost, $/hectare, ($/acre):	6,200 (2,500)
Dilution pumping station:	$520,000
New off-shore platforms:	$4,200,000
Pumps and piping:	$2,200,000
Chemical treatment facilities:	$200,000
Construction overhead:	20% of direct costs

Operating and Maintenance Costs

Labor and maintenance:	8% of investment
Power:	$100/HP-hr
Chlorine, dollars/kkg (dollars/ton):	110 (100)
Taxes and insurance:	2% of investment costs

Processing of ore to pigment uses either of two processes depending on the source and purity of the ore. For relatively pure ores, processing consists simply of crushing and grinding followed by air classification. This is a dry process which uses no water and has no treatment costs. Alternatively, for less pure ores, a washing step designed to remove sand and gravel, followed by dewatering and drying is used. This process has waste water treatment costs. Table 23 gives cost estimates for waste water treatment for this wet process.

Cost Variance

Age. The one facility found using the wet process has an age of 50 years. Age is not believed to be a significant factor for cost variance.

Location. Location was not found to be a significant factor for cost variance.

Size. Only one facility was found using the wet process. Size is not believed to be a significant factor for cost variance.

Cost Basis For Table 23

Capital Costs

Pond cost, $/hectare ($/acre):	24,700 (10,000)
Settling pond area, hectares (acres):	0.40 (1)
Pumps and piping:	$5,000

Operating and Maintenance Costs

Maintenance: 4% of investment
Power: $100/HP-yr
Taxes and insurance: 2% of investment

TABLE 23

COST FOR A REPRESENTATIVE PLANT

(ALL COSTS ARE CUMULATIVE)

SUBCATEGORY Mineral Pigments (Wet Process)

PLANT SIZE 3,000 METRIC TONS PER YEAR OF product

PLANT AGE 50 YEARS PLANT LOCATION Eastern United States

		LEVEL				
		A (MIN)	B	C	D	E
INVESTED CAPITAL COSTS:						
TOTAL		15,000	20,000			
ANNUAL CAPITAL RECOVERY		1,750	2,530			
OPERATING AND MAINTENANCE COSTS:						
ANNUAL O & M (EXCLUDING POWER AND ENERGY)		900	1,200			
ANNUAL ENERGY AND POWER		500	1,000			
TOTAL ANNUAL COSTS		3,250	4,550			
COST/METRIC TON product		1.08	1.52			
WASTE LOAD PARAMETERS (kg/metric ton of product)	RAW WASTE LOAD					
Suspended Solids	--	2.3	0			

LEVEL DESCRIPTION:

A — Pond settling and discharge

B — Pond settling and total recycle

There are only two facilities mining and processing spodumene ore in the U.S. At both facilities the process water recycle is 90 percent or greater. The remainder is discharged. Large volumes of solid wastes are inherent to the process. These wastes are stored and/or disposed of by a combination of the following means:

(1) Landfill or land storage as solids;
(2) Storage as settled solids in ponds;
(3) Processing and recovery as salable by-products; and
(4) A small portion is discharged to surface water as suspended or dissolved materials.

The two facilities differ as to the above options employed. Processing and recovery or by-products also introduces new wastes into the waste water that are not present otherwise. Therefore, the treatment technologies and costs developed in Table 24 represent the best estimate of composite values for both facilities. Level A represents present performance and Level B future performance. Level B is based mainly on projected installations for which the two facilities have supplied technology and cost information.

Cost Variance

Age. Age was not found to be a significant factor in cost variance.

Location. Both facilities are located in North Carolina. Geographical location is not a significant factor in cost variance.

Size. The facilities are of the same approximate size. Size is not a significant factor in cost variance.

Cost Basis For Table 24

Capital Costs

Pond costs, $/hectare ($/acre):	7,400 (3,000)
Pond area, hectares (acres):	50 (125)
Pumps and piping:	$100,000

TABLE 24

COST FOR A REPRESENTATIVE PLANT

(ALL COSTS ARE CUMULATIVE)

SUBCATEGORY Lithium Minerals

PLANT AGE 15 YEARS PLANT LOCATION North Carolina

		LEVEL				
		A (MIN)	B	C	D	E
INVESTED CAPITAL COSTS:						
TOTAL		475,000	725,000			
ANNUAL CAPITAL RECOVERY		77,300	128,000			
OPERATING AND MAINTENANCE COSTS:						
ANNUAL O & M (EXCLUDING POWER AND ENERGY)		133,000	212,000			
ANNUAL ENERGY AND POWER		10,000	15,000			
TOTAL ANNUAL COSTS		220,300	340,000			
COST/METRIC TON spodumene concentrate		4.90	7.56			
WASTE LOAD PARAMETERS (kg/metric ton of spodumene concentrate)	RAW WASTE LOAD					
Suspended Solids	100-620	0.9	0.9			
Iron	-	0.038	0.02			
Fluoride	-	0.14	0.07			
Manganese	-	0.11	0.05			

LEVEL DESCRIPTION:

A -- Ponding of wastewater to remove suspended solids plus 90% recycle of mine and process wastewater

B -- Level A plus segregation and treatment of additional wastewater streams plus 95% recycle of all mine and process wastewater

Operating and Maintenance Costs

Pond maintenance:	2% of invested pond capital
Non-pond maintenance:	6% of invested non-pond capital
Labor cost:	$10,000/man-yr
Power:	$100/HP-yr
Chemical:	$100,000/yr

MINE DRAINAGE

Mine drainage is less than 10 percent of the total waste water volume and is now partially treated with the process waste water. Rough estimates for treating any necessary residual mine drainage water are $0.01 to 0.05/kkg of product produced.

SECTION IX

EFFLUENT REDUCTION ATTAINABLE THROUGH THE APPLICATION OF THE BEST PRACTICABLE CONTROL TECHNOLOGY CURRENTLY AVAILABLE

INTRODUCTION

The effluent limitations which must be achieved by July 1, 1977, are based on the degree of effluent reduction attainable through the application of the best practicable control technology currently available. For the mining of minerals for the chemical and fertilizer industries, this level of technology was based on the average of the best existing performance by facilities of various sizes, ages, and processes within each of the industry's subcategories. In Section IV, this segment of the minerals mining and processing industry was divided into twelve major categories. Several of these major categories have been further subcategorized and, for reasons explained in Section IV, each subcategory will be treated separately for the recommendation of effluent limitations guidelines and standards of performance.

Best practicable control technology currently available emphasizes treatment facilities at the end of a manufacturing process but also includes the control technology within the process itself when it is considered to be normal practice within an industry. Examples of waste management techniques which were considered normal practice within these industries are:

(a) manufacturing process controls;
(b) recycle and alternative uses of water; and
(c) recovery and/or reuse of some waste water constituents.

Consideration was also given to:

(a) the total cost of application of technology in relation to the effluent reduction benefits to be achieved from such application;
(b) the size and age of equipment and facilities involved;
(c) the process employed;
(d) the engineering aspects of the application of various types of control techniques;
(e) process changes; and
(f) non-water quality environmental impact (including energy requirements).

The following is a discussion of the best practicable control technology currently available for each of the subcategories, and the proposed limitations on the pollutants in their effluents.

GENERAL WATER GUIDELINES

Process Water

Process water is defined as any water contacting the ore, processing chemicals, intermediate products, by-products or products of a process including contact cooling water during processing. All process water effluents are limited to the pH range of 6.0 to 9.0 unless otherwise specified.

Process generated waste water is defined as any water which in the mineral processing operations such as crushing, washing and beneficiation, comes into direct contact with any raw material, intermediate product, by-product or product used in or resulting from the process.

Where sufficient data was available a statistical analysis of the data was performed to determine a monthly and a daily maximum. In most subcategories, where there is an allowable discharge, an achievable monthly maximum was determined from the data available.

A detailed analysis of the ratio of daily TSS to monthly TSS maximum at a 99 percent level of confidence for large phosphate slime ponds indicates that a TSS ratio of 2.0 is representative of a large settling pond treatment system, and this ratio was used where there was insufficient data to predict a daily maximum directly.

A ratio of 2.0 was also used for parameters other than TSS. It is judged that this is an adequate ratio since the treatment systems for F, Zn and Fe for instance have controllable variables, such as pH and amount of lime addition. This is in contrast to a pond treating only TSS which has few if any operator controllable variables.

Cooling Water

In the minerals mining and processing industry, cooling and process waters are sometimes mixed prior to treatment and discharge. In other situations, cooling water is discharged separately. Based on the application of best practicable technology currently available, the recommendations for the discharge of such cooling water are as follows:

An allowed discharge of all non-contact cooling waters provided that the following conditions are met:

(a) Thermal pollution be in accordance with EPA standards. Excessive thermal rise in once through non-contact cooling water in the mineral mining industry has not been a significant problem.

(b) All non-contact cooling waters should be monitored to detect leaks of pollutants from the process. Provisions should be made for treatment to the standards established for process waste water discharges prior to release in the event of such leaks.

(c) No untreated process waters be added to the cooling waters prior to discharge.

The above non-contact cooling water recommendations should be considered as interim, since this type of water plus blowdowns from water treatment, boilers and cooling towers will be regulated by EPA as a separate category.

Mine Drainage

Mine drainage is any water drained, pumped or siphoned from a mine.

Storm Water Runoff

Untreated overflow may be discharged from process waste water or mine drainage impoundments without limitation if the impoundments are designed, constructed and operated to contain all process generated waste water or mine drainage and surface runoff into the impoundments resulting from a 10 year 24 hour precipitation event as established by the National Climatic Center, National Oceanic and Atmospheric Administration for the locality in which such impoundments are located. To preclude unfavorable water balance conditions resulting from precipitation and runoff in connection with tailing impoundments, diversion ditching should be constructed to prevent natural drainage or runoff from mingling with process waste water or mine drainage.

PROCESS WASTEWATER GUIDELINES AND LIMITATIONS

BARITE (DRY PRODUCTION SUBCATEGORY

Based upon the information contained in Sections III through VIII, a determination has been made that the degree of effluent reduction attainable through the application of the best practicable control technology currently available is no discharge of process generated waste water pollutants because no process water is used.

The mine drainage and process contaminated runoff should be held to a daily maximum of 35 mg/l TSS based on the data from other subcategories. No mine drainage was found for this subcategory.

BARITE (WET-LOG WASHING AND JIGGING AND FLOTATION)

Based upon the information contained in Sections III through VIII, a determination has been made that the degree of effluent reduction attainable through the application of the best practicable control technology currently available is: no discharge of process waste water pollutants. The following limits apply to process water pond discharges resulting from rainfall and to mine drainage.

	Effluent Limitation mg/l	
Effluent Characteristic	Monthly Average	Daily Maximum
process waste water TSS	15	30
mine drainage TSS	35	70
(acid mine water) dissolved Fe	0.3	0.6

There is no discharge of process waste water pollutants during normal operating conditions. The above limitations apply to discharges occurring during heavy rainfall. The quantity of water used in this subcategory is independent of the quantity of product. Therefore, effluent limitations based on quantity of pollutant per unit of production are not practical. There is one mine experiencing acid mine drainage and is currently building a treatment system. Best practicable control technology currently available for the mining and processing of barite by the wet processes is containment of process waste water, settling of suspended solids, and recycle of process water during normal operating conditions. Where there is a discharge during periods of heavy rainfall, settling of suspended solids by ponding, flocculation, coagulation or other methods may be necessary. Four facilities in these subcategories in the same net precipitation geographical location are currently achieving this limitation.

FLUORSPAR (HMS)

Based upon the information contained in Sections III through VIII, a determination has been made that the degree of effluent reduction attainable through the application of the best practicable control technology currently available is no discharge of process generated waste water pollutants. Best practicable control technology currently available for the mining and processing of fluorspar by the HMS process is impountment of process water and total recycle. To implement this technology at the one facility not already using the recommended control techniques would require the installation of recycle equipment. Five of the six facilities studied are presently utilizing the recommended technologies.

FLUORSPAR (FLOTATION)

Based upon the information contained in Sections III through VIII, a determination has been made that the degree of effluent reduction attainable through the application of the best practicable control technology currently available is:

	Effluent Limitation kg/kkg of product (lbs/1000 lb)	
Effluent Characteristic	Monthly Average	Daily Maximum
TSS	0.6	1.2
dissolved fluoride	0.2	0.4

The above limitations are based on the anticipated performance of treatment systems currently being installed at two facilities (facilities 2000 and 2001). Best practicable control technology currently available for the mining and processing of fluorspar by the flotation process is ponding in series and flocculation to reduce suspended solids and fluoride prior to discharge. An alternative BPCTCA is ponding and evaporation where possible. To implement this technology at facilities not already using the recommended control techniques would require the installation of ponds in series and flocculant addition facilities. Two facilities are presently installing the recommended technologies.

FLUORSPAR (DRYING AND PELLETIZING)

Based upon the information contained in Sections III through VIII, a determination has been made that the degree of effluent reduction attainable through the application of the best practicable control technology currently available is no discharge of process generated waste water pollutants because there is no process water.

MINE DRAINAGE AND PROCESS CONTAMINATED RUNOFF

Information contained in Sections V through VIII show that mine drainage and process contaminated runoff can meet as a daily maximum: TSS 30 mg/l

SALINES FROM BRINE LAKES (SEARLES LAKE)

Based upon the information contained in Sections III through VIII, a determination has been made that the degree of effluent reduction attainable through the application of the best practicable control technology currently available is no net discharge of process waste water pollutants. Best practicable control technology currently available for the mining and processing of salines from brine lakes by the Searle Lake process is return of depleted brines and liquor to the brine source. The two facilities in this production subcategory are presently using the recommended control technologies.

SALINES FROM BRINE LAKES (GREAT SALT LAKE)

Based upon the information contained in Sections III through VIII, a determination has been made that the degree of effluent reduction attainable through the application of the best practicable control technology currently available is no net discharge of process waste water pollutants. Best practicable control technology currently available for the mining and processing of salines from brine lakes by the Great Salt Lake process is the return of depleted brines and liquor to the brine source. The only facility in this production subcategory is presently using the recommended control technology.

SALINES FROM BRINE LAKES (SILVER PEAK)

Based upon the information contained in Sections III through VIII, a determination has been made that the degree of effluent reduction attainable through the application of the best practicable control technology currently available is no net discharge of process waste water pollutants. Best practicable control technology currently available for the mining and processing of salines from brine lakes by the Silver Peak process is the return of depleted brines and liquor to the brine source. The only facility in this production subcategory is presently using the recommended control technology.

BORAX

Based upon the information contained in Sections III through VIII, a determination has been made that the degree of effluent reduction attainable through the application of the best practicable control technology currently available is no discharge of process waste water pollutants. Best practicable control technology currently available for the mining and processing of borax is the use of lined evaporation ponds. The only facility in this subcategory presently uses the recommended technology.

POTASH

Based upon the information contained in Sections III through VIII, a determination has been made that the degree of effluent reduction attainable through the application of the best practicable control technology currently available is no discharge of process waste water pollutants. Best practicable control technology currently available for the mining and processing of potash by either the dry mining or solution mining process is the use of evaporation ponds to contain process water. All facilities in this subcategory are presently using the recommended technology.

TRONA

Based upon the information contained in Sections III through VIII, a determination has been made that the degree of effluent reduction attainable through the application of the best practicable control technology currently available is no discharge of process waste water and mine drainage pollutants. Best practicable control technology currently available for the mining and processing of trona ore and conversion to soda ash is total impoundment and evaporation of all process waste water and mine water. To implement this technology at facilities not already using the recommended control techniques would require construction of total impoundment evaporation ponds. All facilities use this technology to dispose of process waste water.

SODIUM SULFATE (BRINE WELL)

Based upon the information contained in Sections III through VIII, a determination has been made that the degree of effluent reduction attainable through the application of the best practicable control technology currently available is no discharge of process waste water pollutants. Best practicable control technology currently available for the mining and processing of sodium sulfate by the brine well extraction process is total impoundment and evaporation of all process waste water. The two facilities representing

this production subcategory are presently using the recommended control technologies.

ROCK SALT

Based upon the information contained in Sections III through VIII, a determination has been made that the degree of effluent reduction attainable through the application of the best practicable control technology currently available is:

Effluent Characteristic	Effluent Limitation kg/kkg of product (lbs/1000 lb) Monthly Average	Daily Maximum
TSS	0.02	0.04

The above limitations are based on the performance currently achievable by at least three facilities.

Mine water discharge and process contaminated runoff for this subcategory are included in the above limitations. Best practicable control technology currently available for the mining and processing of rock salt is the control of casual water with good water management practices and settling where required. To implement this technology at facilities not already using the recommended control techniques would require better water management practices and the installation of adequate settling facilities where required. At least three facilities are presently achieving the recommended limitations with the use of the technologies.

PHOSPHATE ROCK

Based upon the information contained in Sections III through VIII, a determination has been made that the degree of effluent reduction attainable through the application of the best practicable control technology currently available is:

Effluent Characteristic	Effluent Limitation Monthly Average	Daily Maximum
TSS	30 mg/l	70 mg/l
Total radium 226	5 pCi/l	

These limits apply to the quantity of water used in the flotation circuits which cannot be economically recycled, because of excessive costs, and the mine water and rainfall. These latter two water sources necessitate using a

concentration rather than a mass unit because they are production independent.

Floor washdowns, equipment washing, ore desliming water, pump seal water, and air emission scrubber water must be completely recycled. However, since it could be physically and economically prohibitive to separate these waters from flotation cell water, mine water and slurry water this condition can be met by using recycled water and not using any fresh water for any of the former uses.

The above limitations were based on the performance achieved at most of the existing Florida slime ponds as shown in Section V.

A statistical analysis was performed by fitting either a normal distribution or a log normal distribution to the data. The best fitting distribution type was then extrapolated to determine the level of treatment presently achievable at a confidence level of 99 percent for the daily and average monthly values of TSS.

It was judged that the average of all these values could not be used since the factors controlling the variability of effluent quality for the slime pond are beyond the practical control of the facility operator. These factors include wind, temperature, and aquatic growth and activity. This last point is demonstrated by the fact that volatile suspended solids comprised the majority of the TSS of the final effluents. The limitations reflect the degree of treatment achievable by properly constructed and maintained slime ponds. Some of the facilities not achieving the limits had insufficient data to be reliable (less than 12 data points). In fact in most cases the predicted 99 percent level of TSS was never reached The rest have serious defects in the treatment system. For instance the two worst discharges indicated by the table in Section V were observed by the project officer to suffer considerable erosion of the earthen discharge ditch walls at points prior to the facility sample points. Other problems noted were incorrect sampling locations and procedures. At one facility the sample point included all untreated facility runoff in addition to the pond discharge. At another the sampler consistently stirred up sediment in the pipe bottom and the reported levels of TSS were incorrectly high.

If unpredictable pond or process upsets do occur, the present use of decant towers by the industry allows the facility operator to cease the discharge for a sufficient length of time in order that the suspended solids settle and be in compliance with the discharge limitations.

Fluoride and phosphorus will not be regulated for several reasons. First the existing treatments are operated to remove only suspended solids. The levels of fluoride appear to be related in part to the well water used in the flotation process. In addition the present fluoride concentrations are far below the practicable level of teatment used by related industries. It expected that a significant portion of the phosphorus is in the form of a suspended solid and that removal of TSS will effect removal of phosphorus.

Although observed concentrations of radium 226 in effluents are generally below 3 pCi/l, the potential exists for effluent concentrations of this radionuclide to substantially increase. These increases could be brought about primarily by higher suspended solid levels in the effluent or the introduction of acid to slime or effluents. Process changes in beneficiation or differences in ore bodies could also effect the radium 226 effluent concentrations. Daily fluctuations in effluent concentration should not significantly rise above the monthly average. Consequently, since it is costly (about $40 per sample) to monitor for radium 226, only a monthly average is given. Best practicable control technology currently available for the mining and processing of phosphate rock is clarification of waste water, recycle insofar as possible, and exclusion of extraneous waters.

To implement this technology at facilities not already using the recommended control techniques would require segregation of process water from incidental water, in so far as possible, control of other casual water, and overall good water management practices.

All facilities sampled currently meet the radium 226 limit. If the radium 226 concentration did exceed 5 pCi/l, barium chloride or lime precipitation together with sulfate ion addition could be used. Also a facility can lower radium 226 concentrations by minimizing acid entry into the process waste water and keeping the TSS concentration low. Most of the Florida facilities on which the guidelines were based are presently achieving the recommended limitations using these technologies. All Western operations do or will shortly recycle all such waters.

SULFUR (ANHYDRITE)

Based upon the information contained in Sections III through VIII, a determination has been made that the degree of effluent reduction attainable through the application of the best practicable control technology currently available is no discharge of process waste water pollutants.

Mine water discharge for this subcategory is included in the above limitations. Best practicable control technology currently available for the mining and processing of sulfur by the Frasch process from anhydrite deposits is the chemical treatment and recycle of process water. Both facilities in this subcategory are using these technologies.

SULFUR (FRASCH PROCESS SALT DOME OPERATIONS)

Based upon the information contained in Sections III through VIII, a determination has been made that the degree of effluent reduction attainable through the application of the best practicable control technology currently available is:

Effluent Characteristic	Effluent Limitation mg/l Monthly Average	Daily Maximum
TSS	50	100
sulfide	1	2

The above limitations are based on the current performance of the 9 facilities in this subcategory.
The quantity of water used in this subcategory is independent of the quantity of product. Therefore, effluent limitations based on quantity of pollutant per unit of production are not practical. Mine drainage for this subcategory is included in the above limitations.

For facilities located in marshes that have insufficient land to build large enough oxidation ponds to achieve the above numbers the following limits apply.

Effluent Characteristic	Effluent Limitation mg/l Monthly Average	Daily Maximum
TSS	50	100
Sulfide	5	10

If oxidation ditches are used by adding water to utilize its dissolved oxygen content, the TSS limits are to be applied on a net basis. There shall be no discharge of elemental sulfur from well seal water. Best practicable control technology currently available for the on-shore salt dome mining and processing of sulfur by the Frasch process is the use of oxygeneration facilities to oxidize sulfides and ponds to reduce suspended solids. To implement this technology at facilities not already using the recommended control techniques would require the installation of

adequate oxygenation equipment and settling ponds. Discharges of sulfur in well seal water can be prevented by careful operational control or by collection tanks. Six of the nine facilities are presently using the recommended technologies.

SULFUR (FRASCH PROCESS - OFF-SHORE SALT DOME OPERATIONS)

No limits on off-shore operations are proposed at this time pending further investigation.

MINERAL PIGMENTS (IRON OXIDES)

Based upon the information contained in Sections III through VIII, a determination has been made that the degree of effluent reduction attainable through the application of the best practicable control technology currently available is no discharge of process generated waste water pollutants.

The mine drainage and process contaminated runoff should be held to a daily maximum of 35 mg/l TSS based on the data from other subcategories. Best practicable control technology currently available for the mining and processing of mineral pigments (iron oxides) is the ponding and recycle of process water when used.

To implement this technology at facilities using process water not already using the recommended control techniques would require the installation of settling facilities and recycle equipment. These technologies are presently being demonstrated by at least one major processor using process water. This facility uses a large pond common to the treatment of waste water from another larger production volume product and the discharge from the pond is attributable to the larger volume product. Two of the three facilities studied use no process water.

LITHIUM MINERALS (SPODUMENE)

Based upon the information contained in Sections III through VIII, a determination has been made that the degree of effluent reduction attainable through the application of the best practicable control technology currently available is:

	Effluent Limitation kg/kkg of ore processed (lbs/1000 lb)	
Effluent Characteristic	Monthly Average	Daily Maximum
TSS	0.11	0.22
fluoride	0.017	0.034

The above limitations are based on the amount achievable by both facilities in this subcategory. Mine drainage and process contaminated runoff for this subcategory is included in the above limitations. Best practicable control technology currently available for the mining and processing of spodumene is flocculation and settling of process water prior to discharge. Both facilities in this subcategory are presently utilizing the recommended technologies.

SECTION X

EFFLUENT REDUCTION ATTAINABLE THROUGH THE APPLICATION OF THE BEST AVAILABLE TECHNOLOGY ECONOMICALLY ACHIEVABLE

INTRODUCTION

The effluent limitations which must be achieved by July 1, 1983 are based on the degree of effluent reduction attainable through the application of the best available technology economically achievable. For the mining of minerals for the chemical and fertilizer industries, this level of technology was based on the very best control and treatment technology employed by a specific point source within each of the industry's subcategories, or where it is readily transferable from one industry process to another. In Section IV, this segment of the mineral mining and processing industry was divided into twelve major categories based on similarities of process. Several of those major categories have been further subcategorized and, for reasons explained in Section IV, each subcategory will be treated separately for the recommendation of effluent limitations guidelines and standards of performance.

The following factors were taken into consideration in determining the best available technology economically achievable:

(a) the age of equipment and facilities involved;
(b) the process employed;
(c) the engineering aspects of the application of various types of control techniques;
(d) process changes;
(e) cost of achieving the effluent reduction resulting from application of BATEA; and
(f) non-water quality environmental impact (including energy requirements).

In contrast to the best practicable technology currently available, best available technology economically achievable assesses the availability in all cases of in-process controls as well as control or additional treatment techniques employed at the end of a production process. In-process control options available which were considered in establishing these control and treatment technologies include the following:

(1) alternative water uses
(2) water conservation
(3) waste stream segregation
(4) water reuse
(5) cascading water uses
(6) by-product recovery
(7) reuse of waste water constituents
(8) waste treatment
(9) good housekeeping
(10) preventive maintenance
(11) quality control (raw material, product, effluent)
(12) monitoring and alarm systems.

Those facility processes and control technologies which at the pilot facility, semi-works, or other level, have demonstrated both technological performances and economic viability at a level sufficient to reasonably justify investing in such facilities were also considered in assessing the best available technology economically achievable. Although economic factors are considered in this development, the costs for this level of control are intended to be for the top-of-the-line of current technology subject to limitations imposed by economic and engineering feasibility. However, this technology may necessitate some industrially sponsored development work prior to its application.

Based upon the information contained in Sections III through IX of this report, the following determinations were made on the degree of effluent reduction attainable with the application of the best available control technology economically achievable in the various subcategories of this segment of the mineral mining and processing industry.

GENERAL WATER GUIDELINES

Process Water

Process water is defined as any water contacting the ore, processing chemicals, intermediate products, by-products or products of a process including contact cooling water. All process water effluents are limited to the pH range of 6.0 to 9.0 unless otherwise specified.

Cooling Water

In the mineral mining and processing industry, cooling and process waters are sometimes mixed prior to treatment and discharge. In other situations, cooling water is discharged separately. Based on the application of best available technology economically achievable, the recommendations for the discharge of such cooling water are as follows.

An allowed discharge of all non-contact cooling waters provided that the following conditions are met:

(1) Thermal pollution be in accordance with EPA standards. Excessive thermal rise in once through non-contact cooling water in the mineral mining and processing industry has not been a significant problem.

(2) All non-contact cooling waters should be monitored to detect leaks of pollutants from the process. Provisions should be made for treatment to the standards established for the process waste water discharges prior to release in the event of such leaks.

(3) No untreated process waters be added to the cooling waters prior to discharge.

The above non-contact cooling water recommendations should be considered as interim, since this type of water plus blowdowns for water treatment, boilers and cooling towers will be regulated by EPA at a later date as a separate category.

Storm Water Runoff

Untreated overflow may be discharged from process waste water or mine drainage impoundments without limitation if the impoundments are designed, constructed and operated to contain all process generated waste water or mine drainage and surface runoff into the impoundments resulting from a 25 year 24 hour precipitation event as established by the National Climatic Center, National Oceanic and Atmospheric Administration for the locality in which such impoundments are located. To preclude unfavorable water balance conditions resulting from precipitation and runoff in connection with tailing impoundments, diversion ditching should be constructed to prevent natural drainage or runoff from mingling with process waste water or mine drainage.

PROCESS WASTEWATER GUIDELINES AND LIMITATIONS

The following industry subcategories were required to achieve no discharge of process waste water pollutants to navigable waters based on best practicable control technology currently available:

barite (dry)
barite (wet), normal operating conditions
barite (flotation), normal operating conditions
fluorspar (HMS)
salines (Searles Lake)
salines (Great Salt Lake)
salines (Silver Peak)
borax
potash
trona
sodium sulfate
phosphate rock (except flotation)
sulfur (anhydrite)
mineral pigments

Best available technology economically achievable is also no discharge of process waste water pollutants.

BARITE (WET - LOG WASHING, JIGGING AND FLOTATION)

Based upon the information contained in Sections III through IX, a determination has been made that the degree of effluent reduction attainable through the application of the best available technology economically achievable is the same as BPCTCA because there are no economically achievable methods available to reduce the suspended solids further during periods of heavy rainfall. The mine drainage and process contaminated runoff limits are the same as for the best practicable control technology currently available.

FLUORSPAR (FLOTATION)

Based upon the information contained in Sections III through IX, a determination has been made that the degree of effluent reduction attainable through the application of the best available technology economically achievable is:

Effluent Characteristic	Effluent Limitation kg/kkg of product (lbs/1000 lb) Monthly Average	Daily Maximum
TSS	0.4	0.8
dissolved fluoride	0.1	0.2

The above limitations are based on the anticipated performance of treatment systems currently being installed at one exemplary facility. The mine drainage and process contaminated runoff limits are the same as for the best practicable control technology currently available. Best available technology economically achievable for the mining and processing of fluorspar by the flotation process is good water management, ponding in series and the use of alum to reduce suspended solids and fluoride prior to discharge. An alternative BATEA is ponding and evaporation where possible. To implement this technology at facilities not already using the recommended control techniques would require the use of alum in treating the process waste water and adequate settling. Two facilities are presently installing most of the recommended technologies and will be able to meet the prescribed limitations with the use of alum to enhance suspended solids settling and fluoride reduction.

ROCK SALT

Based upon the information contained in Sections III through IX, a determination has been made that the degree of effluent reduction attainable through the application of the best available technology economically achievable is:

Effluent Characteristic	Effluent Limitation kg/kkg of product (lbs/1000 lb) Monthly Average	Daily Maximum
TSS (Process and Mine Water)	0.002	0.004
Salt Storage Pile Runoff	No discharge	

The above limitations are based on the performance of at least one facility. Salt storage pile runoff can be eliminated by building storage silos and cones or by covering less frequently used piles with plastic or other fabric. Best available technology economically achievable for the mining and processing of rock salt is the use of drum filters, clarifiers or settling ponds to reduce suspended solids. To implement this technology at facilities not already using the recommended control techniques would require the installation of any of the

above mentioned solids/liquid separation systems. These technologies are commonly employed in the minerals mining and processing industry.

PHOSPHATE ROCK (FLOTATION)

Based upon the information contained in Sections III through IX, a determination has been made that the degree of effluent reduction attainable through the application of the best available technology economically achievable is the same as that for best practicable control technology currently available.

SULFUR (FRASCH PROCESS - SALT DOME OPERATIONS)

Based upon the information contained in Sections III through IX, a determination has been made that the degree of effluent reduction attainable through the application of the best available technology economically achievable is:

Effluent Characteristic	Effluent Limitation mg/l Monthly Average	Daily Maximum
TSS	30	60
sulfide	2	1

The above limitations are based on the current performance of 5 of the 9 facilities. The quantity of water used in this subcategory is independent of the quantity of product. Therefore, effluent limitations based on quantity of pollutant per unit of production are not practical. Mine drainage for this subcategory is included in the above limitations. Best available technology economically achievable for the on-shore salt dome mining and processing of sulfur by the Frasch process is improved settling to reduce suspended solids and the use of chlorination to eliminate sulfides. To implement this technology at facilities not already using the recommended control techniques would require better control of residence time in settling ponds and the installation of chlorination equipment. Five of the nine facilities in this subcategory are presently meeting the recommended TSS limitation and have eliminated sulfides from their effluents.

LITHIUM MINERALS (SPODUMENE)

Based upon the information contained in Sections III through IX, a determination has been made that the degree of effluent reduction attainable through the application of the best available technology economically achievable is:

Effluent Characteristic	Effluent Limitation kg/kkg of ore processed (lbs/1000 lb) Monthly Average	Daily Maximum
TSS	0.11	0.22
fluoride	0.008	0.016

The above limitations are based on the performance at one facility and the projected performance of the planned treatment system at the other facility. Mine drainage and process contaminated runoff for this subcategory are included in the above limitations. Best available technology economically achievable for the mining and processing of spodumene is segregation of process streams and chemical treatment to reduce fluoride. To implement this technology at the facility not already using the recommended control techniques would require installation of chemical treatment facilities and additional piping and pumps. The one facility requiring these treatment technologies presently has plans to implement them.

SECTION XI

NEW SOURCE PERFORMANCE STANDARDS AND PRETREATMENT STANDARDS

INTRODUCTION

This level of technology is to be achieved by new sources. The term "new source" is defined in the Act to mean "any source, the construction of which is commenced after the publication of proposed regulations prescribing a standard of performance." This technology is evaluated by adding to the consideration underlying the identification of best available technology economically achievable, a determination of what higher levels of pollution control are available through the use of improved production processes and/or treatment techniques. Thus, in addition to considering the best in-facility and end-of-process control technology, new source performance standards are how the level of effluent may be reduced by changing the production process itself. Alternative processes, operating methods of other alternatives were considered. However, the end result of the analysis identifies effluent standards which reflect levels of control achievable through the use of improved production processes (as well as control technology), rather than prescribing a particular type of process or technology which must be employed.

The following factors were considered with respect to production processes which were analyzed in assessing the best demonstrated control technology currently available for new sources:

(a) the type of process employed and process changes;
(b) operating methods;
(c) batch as opposed to continuous operations;
(d) use of alternative raw materials and mixes of raw materials;
(e) use of dry rather than wet processes (including substitution of recoverable solvents from water); and
(f) recovery of pollutants as by-products.

In addition to the effluent limitations covering discharges directly into waterways, the constituents of the effluent discharge from a facility within the industrial category which would interfere with, pass through, or otherwise be incompatible with a well designed and operated publicly owned activated sludge or trickling filter waste water treatment facility were identified. A determination was

made of whether the introduction of such pollutants into the treatment facility should be completely prohibited.

PROCESS WATER GUIDELINES

Based upon the information contained in Sections III through X of this report, the following determinations were made on the degree of effluent reduction attainable with the application of new source standards for the various subcategories of the minerals for the chemical and fertilizer industries segment of the mineral mining and processing industry.

Storm Water Runoff

Untreated overflow may be discharged from process waste water or mine drainage impoundments without limitation if the impoundments are designed, constructed and operated to contain all process generated waste water or mine drainage and surface runoff into the impoundments resulting from a 25 year 24 hour precipitation event as established by the National Climatic Center, National Oceanic and Atmospheric Administration for the locality in which such impoundments are located. To preclude unfavorable water balance conditions resulting from precipitation and runoff in connection with tailing impoundments, diversion ditching should be constructed to prevent natural drainage or runoff from mingling with process waste water or mine drainage.

The following industry subcategories were required to achieve no discharge of process waste water pollutants to navigable waters based on best practicable control technology currently available:

barite (dry)
barite (wet), normal operating conditions
barite (flotation), normal operating conditions
fluorspar (HMS)
salines (Searles Lake)
salines (Great Salt Lake)
salines (Silver Peak)
borax
potash
trona
sodium sulfate
phosphate rock (except flotation)
sulfur (anhydrite)
mineral pigments

The new source performance standards are also no discharge of process waste water pollutants.

The following industry subcategories are required to achieve specific effluent limitations as given in the following paragraphs:

BARITE (WET AND FLOTATION)

Same as best available technology economically achievable.

FLUORSPAR (FLOTATION)

Same as best available technology economically achievable.

PHOSPHATE ROCK (FLOTATION)

Same as best available technology economically achievable.

ROCK SALT

Same as best available technology economically achievable.

SULFUR (SALT DOME)

Same as best available technology economically achievable.

LITHIUM MINERALS

Same as best available technology economically achievable.

PRETREATMENT STANDARDS

Recommended pretreatment guidelines for discharge of facility waste water into public treatment works conform in general with EPA Pretreatment Standards for Municipal Sewer Works as published in the July 19, 1973 Federal Register and "Title 40 - Protection of the Environment, Chapter 1 - Environmental Protection Agency, Subchapter D - Water Programs - Part 128 - Pretreatment Standards" a subsequent EPA publication. The following definitions conform to these publications:

a. Compatible Pollutant

The term "compatible pollutant" means biochemical oxygen demand, suspended solids, pH and fecal coliform bacteria, plus additional pollutants identified in the NPDES permit, if the publicly-owned treatment works was designed to treat such pollutants, and, in fact, does remove such pollutants to a substantial degree. Examples of such additional pollutants may include:

chemical oxygen demand
total organic carbon

phosphorus and phosphorus compounds
nitrogen and nitrogen compounds
fats, oils, and greases of animal or vegetable origin except as defined in Prohibited Wastes.

b. Incompatible Pollutant

The term "incompatible pollutant" means any pollutant which is not a compatible pollutant as defined above.

c. Joint Treatment Works

Publicly owned treatment works for both non-industrial and industrial waste water.

d. Major Contributing Industry

A major contributing industry is an industrial user of the publicly owned treatment works that: has a flow of 50,000 gallons or more per average work day; has a flow greater than five percent of the flow carried by the municipal system receiving the waste; has in its waste, a toxic pollutant in toxic amounts as defined in standards issued under Section 307(a) of the Act; or is found by the permit issuance authority, in connection with the issuance of an NPDES permit to the publicly owned treatment works receiving the waste, to have significant impact, either singly or in combination with other contributing industries, on that treatment works or upon the quality of effluent from that treatment works.

e. Pretreatment

Treatment of waste waters from sources before introduction into the joint treatment works.

Prohibited Wastes

No waste introduced into a publicly owned treatment works shall interfere with the operation or performance of the works. Specifically, the following wastes shall not be introduced into the publicly owned treatment works:

(a) Wastes which create a fire or explosion hazard in the publicly owned treatment works;

(b) Wastes which will cause corrosive structural damage to treatment works, but in no case wastes with a pH lower than 5.0, unless the works are designed to accommodate such wastes;

(c) Solid or viscous wastes in amounts which would cause obstruction to the flow in sewers, or other interference with the proper operation of the publicly-owned treatment works, and

(d) Wastes at a flow rate and/or pollutant discharge rate which is excessive over relatively short time periods so that there is a treatment process upset and subsequent loss of treatment efficiency.

Recommended Pretreatment Guidelines

In accordance with the preceding Pretreatment Standards for Municipal Sewer Works, the following are recommended for Pretreatment Guidelines for the waste water effluents:

(a) No pretreatment required for removal of compatible pollutants - biochemical oxygen demand, suspended solids (unless hazardous), pH, and fecal coliform bacteria;

(b) Suspended solids containing hazardous pollutants such as heavy metals, cyanides and chromates should conform to be restricted to those quantities recommended for the best practicable control technology currently available for existing sources and for new source performance standards for new sources.

(c) Pollutants such as chemical oxygen demand, total organic carbon, phosphorus and phosphorus compounds, nitrogen and nitrogen compounds, and fats, oils, and greases, need not be removed provided the publicly owned treatment works was designed to treat such pollutants and will accept them. Otherwise levels should be at or below the best practicable control technology currently available for existing sources and for new source performance standards for new sources.

(d) Limitations on dissolved solids is not recommended except in case of water quality violations.

SECTION XII

ACKNOWLEDGEMENTS

The preparation of this report was accomplished through the efforts of the staff of General Technologies Division, Versar, Inc., Springfield, Virginia, under the overall direction of Dr. Robert G. Shaver, Vice President. Mr. Robert C. Smith, Jr., Chief Engineer, Project Office, directed the day-to-day work on the program.

Mr. Michael W. Kosakowski was the Project Officer. Mr. Allen Cywin, Director, Effluent Guidelines Division, Mr. Ernst P. Hall, Jr., Assistant Director, Effluent Guidelines Division, and Mr. Harold B. Coughlin, Chief, Guidelines Implementation Branch, offered many helpful suggestions during the program. Mr. Ralph Lorenzetti assisted with many facility inspections.

Acknowledgement and appreciation is also given to Linda Rose and Darlene Miller the word processing/editorial assistant staff of the Effluent Guidelines Division and the secretarial staff of the General Technologies Division of Versar, Inc., for their efforts in the typing of drafts, necessary revisions, and final preparation of the effluent guidelines document.

Appreciation is extended to the following trade associations and state and federal agencies for assistance and cooperation rendered to us in this program:

American Mining Congress
Asbestos Information Association, Washington, D.C.
Barre Granite Association
Brick Institute of America
Building Stone Institute
Fertilizer Institute
Florida Limerock Institute, Inc.
Florida Phosphate Council
Georgia Association of Mineral Processing Industries
Gypsum Association
Indiana Limestone Institute
Louisiana Fish and Wildlife Commission
Louisiana Water Pollution Control Board
Marble Institute of America
National Clay Pipe Institute
National Crushed Stone Association
National Industrial Sand Association
National Limestone Institute

National Sand and Gravel Association
New York State Department of Environmental Conservation
North Carolina Minerals Association
North Carolina Sand, Gravel and Crushed Stone Association
Portland Cement Association
Refractories Institute
Salt Institute
State of Indiana Geological Survey
Texas Water Quality Board
U.S. Bureau of Mines
U.S. Fish and Wildlife Service, LaCrosse, Wisconsin
Vermont Department of Water Resources

Appreciation is also extended to the many mineral mining and producing companies who gave invaluable assistance and cooperation in this program.

Also, appreciation is extended to the individuals of the staff of General Technologies Division of Versar, Inc., for their assistance during this program. Specifically, our thanks to:

Dr. R. L. Durfee, Senior Chemical Engineer
Mr. D. H. Sargent, Senior Chemical Engineer
Mr. E. F. Abrams, Chief Engineer
Mr. L. C. McCandless, Senior Chemical Engineer
Dr. L. C. Parker, Senior Chemical Engineer
Mr. E. F. Rissman, Environmental Scientist
Mr. J. C. Walker, Chemical Engineer
Mrs. G. Contos, Chemical Engineer
Mr. M. W. Slimak, Environmental Scientist
Dr. I. Frankel, Chemical Engineer
Mr. M. DeFries, Chemical Engineer
Ms. C. V. Fong, Chemist
Mrs. D. K. Guinan, Chemist
Mr. J. G. Casana, Environmental Engineer
Mr. R. C. Green, Environmental Scientist
Mr. R. S. Wetzel, Environmental Engineer
Ms. M.A. Connole, Biological Scientist
Ms. M. Smith, Analytical Chemist
Mr. M. C. Calhoun, Field Engineer
Mr. D. McNeese, Field Engineer
Mr. E. Hoban, Field Engineer
Mr. P. Nowacek, Field Engineer
Mr. B. Ryan, Field Engineer
Mr. R. Freed, Field Engineer
Mr. N. O. Johnson, Consultant
Mr. F. Shay, Consultant
Dr. L. W. Ross, Chemical Engineer
Mr. J. Boyer, Chemical Engineer

SECTION XIII

REFERENCES

1. Agnello, L., "Kaolin", Industrial and Engineering Chemistry, Vol. 52, No. 5, May 1960, pp. 370-376.

2. "American Ceramic Society Bulletin," Vol. 53, No. 1, January 1974, Columbus, Ohio.

3. Arndt, R.H., "The Shell Dredging Industry of the Gulf Coast Region," U.S. Department of the Interior, 1971.

4. Bates, R.L., Geology of the Industrial Rocks and Minerals, Dover Publications, Inc., New York, 1969.

5. Beeghly, J.H., "Water Quality and the Sand and Gravel Industry," 37th Annual Meeting Ohio Sand and Gravel Association, 1971.

6. Black and Veatch, Consulting Engineers, "Process Design Manual for Phosphorus Removal," U.S. EPA Program 17010 GNP Contract 14-12-936, October, 1971.

7. Boruff, C.S., "Removal of Fluorides from Drinking Waters," Industrial and Engineering Chemistry, Vol. 26, No. 1, January 1934, pp. 69-71.

8. Brooks, R.G., "Dewatering of Solids," 57th Annual Convention National Crushed Stone Association, 1974.

9. Brown, W.E., U.S. Patent 2,761,835, September 1956.

10. Brown, W.E., and Gracobine, C.R., U.S. Patent 2,761,841, September 1956.

11. "Census of Minerals Industries," 1972, Bureau of the Census, U.S. Department of Commerce, U.S. Government Printing Office, Washington, D.C. MIC72(P)-14A-1 through MIC72(P)-14E-4.

12. "Commodity Data Summaries, 1974, Appendix I to Mining and Minerals Policy," Bureau of Mines, U.S. Department of the Interior, U.S. Government Printing Office, Washington, D.C.

13. Davison, E.K., "Present Status of Water Pollution Control Laws and Regulations," 57th Annual Convention National Sand and Gravel Association, 1973.

14. Day, R.W., "The Hydrocyclone in Process and Pollution Control," Chemical Engineering Progress, Vol. 69, No. 9, 1973, pp. 67-72.

15. "Dictionary of Mining, Mineral, and Related Terms," Bureau of Mines, U.S. Department of the Interior, U.S. Government Printing Office, Washington, D.C., 1968.

16. "Engineering and Mining Journal," McGraw-Hill, October 1974.

17. Groom, F., "Vacuum Filtration - An Alternative to the Use of Large Settling Ponds in Sand and Gravel Production," National Sand and Gravel Association Circular No. 117.

18. Haden, W., Jr., and Schwint, I., "Attapulgite, Its Properties and Applications," Industrial and Engineering Chemistry, Vol. 59, No. 9, September 1967, pp. 57-69.

19. Huffstuter, K.K., Slack, A.V., Phosphoric Acid, Vol. 1, Part 2, Marcel Dekker, Inc., N.Y., 1968.

20. "Indiana Limestone Handbook," Indiana Limestone Institute of America, Inc., January 1973, Bedford, Indiana.

21. Krenkel, P.A., "Principles of Sedimentation and Coagulation As Applied to the Clarification of Sand and Gravel Process Water," National Sand and Gravel Association Circular No. 118.

22. Levine, S., "Liquid/Solids Separation Via Wet Classification," Rock Products, September 1972, pp. 84-95.

23. Little, A.D., "Economic Impact Analysis of New Source Air Quality Standards on the Crushed Stone Industry," EPA Draft Report, 1974.

24. Llewellyn, C.M., "The Use of Flocculants in the James River Estuary," Miscellaneous Paper, Lone Star Industries.

25. Llewellyn, C.M., "Maintenance of Closed Circuit Water Systems," National Crushed Stone Association Meeting, Charlotte, N.C., 1973.

26. Locke, S.R., Ozal, M.A., Gray, J., Jackson, R.E., and Preis, A., "Study to Determine the Feasibility of an Experiment to Transfer Technology to the Crushed Stone

Industry," Martin Marietta Laboratories, NSF Contract C826, 1974.

27. Maier, F.J., "Defluoridation of Municipal Water Supplies," Journal AWWA, August 1953, pp. 879-888.

28. May, E.B., "Environmental Effects of Hydraulic Dredging in Estuaries," Alabama Marine Resources Bulletin No. 9, April 1973, pp. 1-85.

29. McNeal, W., and Nielsen, G., "International Directory of Mining and Mineral Processing Operations," E/MJ, McGraw-Hill, 1973-1974.

30. "Minerals Yearbook, Metals, Minerals, and Fuels, Vol. 1," U.S. Department of the Interior, U.S. Government Printing Office, Washington, D.C., 1971, 1972.

31. "Mining Engineering, Publication of the Society of Mining Engineers of AIME, Annual Review for 1973," Vol. 25, No. 1, January 1973; Vol. 26, No. 3, March 1974 through Vol. 26, No. 8, August 1974.

32. "Modern Mineral Processing Flowsheets," Denver Equipment Company, 2nd Ed., Denver, Colorado

33. Monroe, R.G., "Wastewater Treatment Studies in Aggregate and Concrete Production," EPA Technology Series EPA-R2-73-003, 1973.

34. Newport, B.D., and Moyer, J.E., "State-of-the-Art: Sand and Gravel Industry," EPA Technology Series EPA-660/2-74-066, 1974.

35. Oleszkiewicz, J.A., and Krenkel, P.A., "Effects of Sand and Gravel Dredging in the Ohio River," Vanderbilt University Technical Report No. 29, 1972.

36. Patton, T.C., "Silica, Microcrystalline," Pigment Handbook Vol. 1, J. Wiley and Sons, Inc., 1973, pp. 157-159.

37. Popper, H., Modern Engineering Cost Techniques, McGraw-Hill, New York, 1970.

38. "Phosphorus Derived Chemicals," U.S. EPA, EPA-440/1-74-006-a, Washington, D.C., January, 1974.

39. Price, W.L., "Dravo Dredge No. 16," National Sand and Gravel Association Circular No. 82, 1960.

40. "Product Directory of the Refractories Industry in the U.S.," The Refractories Institute, Pittsburgh, Pa. 1972.

41. "Radiochemical Pollution from Phosphate Rock Mining and Milling," National Field Investigations Center, Denver, EPA, Denver, Colorado, December, 1973.

42. Resource Consultants, Inc., Engineering Report, "Wastewater Treatment for Dixie Sand and Gravel Co.," Chattanooga, Tenn., 1972.

43. Robertson, J.L., "Washer/Classifier System Solves Clay Problem at Sand and Gravel Facility," Rock Products, March 1973, pp. 50-53.

44. Slabaugh, W.H., and Culbertsen, J.L., J. Phys. Chem., 55, 744, 1951.

45. Smith, C.A., "Pollution Control Through Waste Fines Recovery," National Sand and Gravel Association Circular No. 110.

46. State Directories of the Mineral Mining Industry from 36 of 50 States.

47. Trauffer, W.E., "New Vermont Talc Facility Makes High-Grade Flotation Product for Special Uses," Pit and Quarry, December 1964, pp. 72-74, 101.

48. Walker, S., "Production of Sand and Gravel," J. Amer. Concrete Inst., Vol. 26, No. 2, 1954, pp. 165-178.

49. Williams, F.J., Nezmayko, M., and Weintsitt, D.J., J. Phys. Chem., 57, 8, 1953.

SECTION XIV

GLOSSARY

Aeration - the introduction of air into the pulp in a flotation cell in order to form air bubbles.

Aquifer - an underground stratum that yields water.

Baghouse - chamber in which exit gases are filtered through membranes (bags) which arrest solids.

Bench - a ledge, which, in open pit mines and quarries, forms a single level of operation above which mineral or waste materials are excavated from a contiguous bank or bench face.

Berm - a horizontal shelf built for the purpose of strengthening and increasing the stability of a slope or to catch or arrest slope slough material; berm is sometimes used as a synonym for bench.

Blunge - to mix thoroughly.

Burden - valueless material overlying the ore.

Cell, cleaner - secondary cells for the retreatment of the concentrate from primary cells.

Cell, rougher - flotation cells in which the bulk of the gangue is removed from the ore.

Clarifier - a centrifuge, settling tank, or other device, for separating suspended solid matter from a liquid.

Classifier, air - an appliance for approximately sizing crushed minerals or ores employing currents of air.

Classifier, rake - a mechanical classifier utilizing reciprocal rakes on an inclined plane to separate coarse from fine material contained in a water pulp.

Classifier, spiral - a classifier for separating fine-size solids from coarser solids in a wet pulp consisting of an interrupted-flight screw conveyor, operating in an inclined trough.

Collector - a heteropolar compound chosen for its ability to adsorb selectively in froth flotation and render the adsorbing surface relatively hydrophobic.

Conditioner - an apparatus in which the surfaces of the mineral species present in a pulp are treated with appropriate chemicals to influence their reaction during aeration.

Crusher, cone - a machine for reducing the size of materials by means of a truncated cone revolving on its vertical axis within an outer chamber, the anular space between the outer chamber and cone being tapered.

Crusher, gyratory - a primary crusher consisting of a vertical spindle, the foot of which is mounted in an eccentric bearing within a conical shell. The top carries a conical crushing head revolving eccentrically in a conical maw.

Crusher, jaw - a primary crusher designed to reduce the size of materials by impact or crushing between a fixed plate and an oscillating plate or between two oscillating plates, forming a tapered jaw.

Crusher, roll - a reduction crusher consisting of a heavy frame on which two rolls are mounted; the rolls are driven so that they rotate toward one another. Rock is fed in from above and nipped between the moving rolls, crushed, and discharged below.

Depressant - a chemical which causes substances to sink through a froth, in froth flotation.

Dispersant - a substance (as a polyphosphate) for promoting the formation and stabilization of a dispersion of one substance in another.

Dragline - a type of excavating equipment which employs a rope-hung bucket to dig up and collect the material.

Dredge, bucket - a two-pontooned dredge from which are suspended buckets which excavate material at the bottom of the pond and deposit it in concentrating devices on the dredge decks.

Dredge, suction - a centrifugal pump mounted on a barge.

Drill, churn - a drilling rig utilizing a blunt-edged chisel bit suspended from a cable for putting down vertical holes in exploration and quarry blasting.

Drill, diamond - a drilling machine with a rotating, hollow, diamond-studded bit that cuts a circular channel around a core which when recovered provides a columnar sample of the rock penetrated.

Drill, rotary - various types of drill machines that rotate a rigid, tubular string of rods to which is attached a bit for cutting rock to produce boreholes.

Dryer, flash - an appliance in which the moist material is fed into a column of upward-flowing hot gases with moisture removal being virtually instantaneous.

Dryer, fluidized bed - a cool dryer which depends on a mass of particles being fluidized by passing a stream of hot air through it. As a result of the fluidization, intense turbulence is created in the mass including a rapid drying action.

Dryer, rotary - a dryer in the shape of an inclined rotating tube used to dry loose material as it rolls through.

Electrostatic separator - a vessel fitted with positively and negatively charged conductors used for extracting dust from flue gas or for separating mineral dust from gangues.

Filter, pressure - a machine utilizing pressure to increase the removal rate of solids from tailings.

Filter, vacuum - a filter in which the air beneath the filtering material is exhausted to hasten the process.

Flocculant - an agent that induces or promotes gathering of suspended particles into aggregations.

Flotation - the method of mineral separation in which a froth created in water by a variety of reagents floats some finely crushed minerals, whereas other minerals sink.

Frother - substances used in flotation to make air bubbles sufficiently permanent, principally by reducing surface tension.

Grizzly - a device for the coarse screening or scalping of bulk materials.

Hydraulic Mining - mining by washing sand and dirt away with water which leaves the desired mineral.

Hydrocyclone - a cyclone separator in which a spray of water is used.

Hydroclassifier - a machine which uses an upward current of water to remove fine particles from coarser material.

Humphrey spiral - a concentrating device which exploits differential densities of mixed sands by a combination of sluicing and centrifugal action. The ore pulp gravitates down through a stationary spiral trough with five turns. Heavy particles stay on the inside and the lightest ones climb to the outside.

Jigging - process used to separate coarse materials in the ore by means of differences in specific gravity in a water medium.

Jumbo - a drill carriage on which several drills are mounted.

Kiln, rotary - a kiln in the form of a long cylinder, usually inclined, and slowly rotated about its axis; the kiln is fired by a burner set axially at its lower end.

Kiln, tunnel - a long tunnel-shaped furnace through which ware is generally moved on cars, passing progressively through zones in which the temperature is maintained for preheating, firing and cooling.

Launder - a chute or trough for conveying powdered ore, or for carrying water to or from the crushing apparatus.

Log washer - a slightly slanting trough in which revolves a thick shaft or log, carring blades obliquely set to the axis. Ore is fed in at the lower end, water at the upper. The blades slowly convey the lumps of ore upward against the current, while any adhering clay is gradually disintegrated and floated out the lower end.

Magnetic separator - a device used to separate magnetic from less magnetic or nonmagnetic materials.

mgd - million gallons per day

Mill, ball - a rotating horizontal cylinder in which non-metallic materials are ground using various types of grinding media such as quartz pebbles, porcelain balls, etc.

Mill, buhr - a stone disk mill, with an upper horizontal disk rotating above a fixed lower one.

Mill, chaser - a cylindrical steel tank lined with wooden rollers revolving 15-30 times a minute.

Mill, hammer - an impact mill consisting of a rotor, fitted with movable hammers, that is revolved rapidly in a vertical plane within a closely fitting steel casing.

Mill, pebble - horizontally mounted cylindrical mill, charged with flints or selected lumps of ore or rock.

Mill, rod - a mill for fine grinding, somewhat similar to a ball mill, but employing long steel rods instead of balls to effect the grinding.

Mill, roller - a fine grinding mill having vertical rollers running in a circular enclosure with a stone or iron base.

Neutralization - making neutral or inert, as by the addition of an alkali or an acid solution.

Outcrop - the part of a rock formation that appears at the surface of the ground or deposits that are so near to the surface as to be found easily by digging.

Overburden - material of any nature, consolidated or unconsolidated, that overlies a deposit of useful materials, ores, etc.

Permeability - capacity for transmitting a fluid.

Raise - an inclined opening driven upward from a level to connect with the level above or to explore the ground for a limited distance above one level.

Reserve - known ore bodies that may be worked at some future time.

Ripper - a tractor accessory used to loosen compacted soils and soft rocks for scraper loading.

Room and Pillar - a system of mining in which the distinguishing feature is the winning of 50 percent or more of the ore in the first working. The ore is mined in rooms separated by narrow ribs (pillars); the ore in the pillars is won by subsequent working in which the roof is caved in successive blocks.

Scraper - a tractor-driven surface vehicle the bottom of which is fitted with a cutting blade which when lowered is dragged through the soil.

Scrubber, dust - special apparatus used to remove dust from air by washing.

Scrubber, ore - device in which coarse and sticky ore is washed free of adherent material, or mildly disintegrated.

Shuttle-car - a vehicle which transports raw materials from loading machines in trackless areas of a mine to the main transportation system.

Sink-float - processes that separate particles of different sizes or composition on the basis of specific gravity.

Skip - a guided steel hoppit used in vertical or inclined shafts for hoisting mineral.

Slimes - extremely fine particles derived from ore, associated rock, clay or altered rock.

Sluice - to cause water to flow at high velocities for wastage, for purposes of excavation, ejecting debris, etc.

Slurry - pulp not thick enough to consolidate as a sludge but sufficiently dewatered to flow viscously.

Stacker - a conveyor adapted to piling or stacking bulk materials or objects.

Stope - an excavation from which ore has been excavated in a series of steps.

Stripping ratio - the unit amount of spoil that must be removed to gain access to a similar unit amount of ore or mineral material.

Sump - any excavation in a mine for the collection of water for pumping.

Table, air - a vibrating, porous table using air currents to effect gravity concentration of sands.

Table, wet - a concentration process whereby a separation of minerals is effected by flowing a pulp across a riffled plane surface inclined slightly from the horizontal, differentially shaken in the direction of the long axis and washed with an even flow of water at right angles to the direction of motion.

TDS Total dissolved solids

Thickener - an apparatus for reducing the proportion of water in a pulp.

TKN - Total kylldahl nitrogen.

TSS - Total suspended solids.

Waste - the barren rock in a mine or the part of the ore deposit that is too low in grade to be of economic value at the time.

Water, connate - water that was deposited simultaneously with the solid sediments, and which has not, since its deposition, existed as surface water or as atmospheric moisture.

Weir - an obstruction placed across a stream for the purpose of channeling the water through a notch or an opening in the weir itself.

Wire saw - a saw consisting of one- and three-strand wire cables, running over pulleys as a belt. When fed by a slurry of sand and water and held against rock by tension, it cuts a narrow channel by abrasion. many facility inspections.

TABLE 25

METRIC UNITS

CONVERSION TABLE

Multiply (English Units)		by	To obtain (Metric units)	
ENGLISH UNIT	ABBREVIATION	CONVERSION	ABBREVIATION	METRIC UNIT
acre	ac	0.405	ha	hectares
acre - feet	ac ft	1233.5	cu m	cubic meters
British Thermal Unit	BTU	0.252	kg cal	kilogram - calories
British Thermal Unit/ pound	BTU/lb	0.555	kg cal/kg	kilogram calories/kilogram
cubic feet/minute	cfm	0.028	cu m/min	cubic meters/minute
cubic feet/second	cfs	1.7	cu m/min	cubic meters/minute
cubic feet	cu ft	0.028	cu m	cubic meters
cubic feet	cu ft	28.32	l	liters
cubic inches	cu in	16.39	cu cm	cubic centimeters
degree Fahrenheit	F°	0.555 (°F-32)*	°C	degree Centigrade
feet	ft	0.3048	m	meters
gallon	gal	3.785	l	liters
gallon/minute	gpm	0.0631	l/sec	liters/second
horsepower	hp	0.7457	kw	killowatts
inches	in	2.54	cm	centimeters
inches of mercury	in Hg	0.03342	atm	atmospheres
pounds	lb	0.454	kg	kilograms
million gallons/day	mgd	3,785	cu m/day	cubic meters/day
mile	mi	1.609	km	kilometer
pound/square inch (gauge)	psig	(0.06805 psig +1)*	atm	atmospheres (absolute)
square feet	sq ft	0.0929	sq m	square meters
square inches	sq in	6.452	sq cm	square centimeters
tons (short)	t	0.907	kkg	metric tons (1000 kilograms)
yard	y	0.9144	m	meters

*Actual conversion, not a multiplier

☆ U. S. GOVERNMENT PRINTING OFFICE: 1975—592-188/6053