Draft
Recommended Practice
for

Measurement of Gaseous and Particulate Emissions

from

Light-Duty Diesel Vehicles

March, 1978

General Introduction

This document describes recommended test procedures for the measurement of exhaust emissions from light-duty Diesel vehicles. Because of overlapping areas in the gasoline-fueled and Diesel test procedures, this document is structured in Federal Register format (as published on June 28, 1977, pgs. 32906-33004) in order to be as clear and unambiguous as possible. It should be specifically noted that this format incorporates Diesel particulate testing for the 1981 and later model years. Any sections in the current Federal Emission Test Procedure (Subpart B) which are affected by the incorporation of particulate testing are included in this recommended practice, along with §86.081-2 (Subpart A) which defines terms associated with particulate testing. A vertical line in the left margin indicates that a change to the current procedure has been made on the adjacent line of the text. The specific changes are enclosed in brackets, [ ], as an aid to the reader. Sections which pertain entirely to particulate measurement are identified in the Table of Contents by braces, { }.

The most noteworthy concepts of this test procedure are summarized in the paragraphs below.

This recommended practice specifies that particulates and regulated gaseous emissions be measured simultaneously over the same urban dynamometer driving cycle (§86.110-81 and §86.135-81). The test

procedure requires a dilution tunnel and positive displacement pump constant volume sampler (§86.110-81). Particulate samples are withdrawn from the tunnel and collected on a filter media operating at a maximum temperature of 125°F (51.7°C) (§86.110-81). Total hydrocarbons are measured continuously through a heated probe in the dilution tunnel with the overall sampling system held to 375° ± 10°F (191° ± 5.6°C) (§86.110-81). CO, CO_2, and NOx are collected in the constant volume sampler bag as presently defined in the Federal Register (§86.110-81 and §86.135-81).

Two particulate samples are taken. A cold start sample is collected over the combined cold transient and cold stabilized portions of the driving cycle, comparable to Bag #1 and Bag #2. A hot start sample is collected over the hot transient and hot stabilized portions of the cycle and requires that the hot stabilized (Bag #4) dynamometer operation be added to the present test procedure (§86.135-81). Filters are weighed on a microgram balance in a controlled ambient weighing room (§86.112-81).

A heated hydrocarbon analysis is specified in the sample stream behind the particulate filter (§86.110-81). The difference between the amount of hydrocarbon measured at this point and the total hydrocarbon measured in the dilution tunnel is an indication of the total organics retained by the materials collected on the filter.

Table of Contents

	Section		Page
*	{86.081-2}	Definitions.	1
*	86.101	Applicability.	2
*	86.102	Definitions.	3
	86.103	Abbreviations.	
	86.104-78	Section numbering; construction.	
	86.105-78	Introduction; structure of Subpart.	
*	86.105-81	Introduction; structure of Subpart.	4
	86.106-78	Equipment required; overview.	
*	86.106-81	Equipment required; overview.	5
	86.107-78	Sampling and analytical system; evaporative emissions.	
	86.108-78	Dynamometer.	
	86.109-78	Exhaust gas sampling system.	
*	86.109-81	Exhaust gas sampling system; gasoline-fueled vehicles.	7
	86.110-78	Reserved.	
*	{86.110-81}	Exhaust gas sampling system; Diesel vehicles.	13
	86.111-78	Exhaust gas analytical system.	
*	86.111-81	Exhaust gas analytical system.	21
	86.112-78	Reserved.	
*	{86.112-81}	Particulate analytical system.	25
	86.113-78	Fuel specifications.	
	86.114-78	Analytical gases.	
	86.114-79	Analytical gases.	

	Section		Page
	86.115-78	EPA dynamometer driving schedules.	
	86.116-78	Calibrations; frequency and overview.	
*	86.116-81	Calibrations; frequency and overview.	27
	86.117-78	Evaporative emission enclosure calibrations.	
	86.118-78	Dynamometer calibration.	
	86.119-78	CVS calibration.	
	86.120-78	Reserved.	
*	{86.120-81}	Gas meter calibration; particulate measurement.	29
	86.121-78	Hydrocarbon analyzer calibration.	
*	86.121-81	Hydrocarbon analyzer calibration.	31
	86.122-78	Carbon monoxide analyzer calibration.	
	86.123-78	Oxides of nitrogen analyzer calibration.	
	86.124-78	Carbon dioxide analyzer calibration.	
	86.125-78	Reserved.	
	86.126-78	Calibration of other equipment.	
	86.127-78	Test procedures; overview.	
*	86.127-81	Test procedures; overview.	33
	86.128-78	Transmissions.	
	86.129-78	Road load power and inertia weight determination.	
	86.129-79	Road load power and inertia weight determination.	
	86.130-78	Test sequence; general requirements.	
	86.131-78	Vehicle preparation.	

	Section		Page
	86.132-78	Vehicle preconditioning.	
*	86.132-81	Vehicle preconditioning.	36
	86.133-78	Diurnal breathing loss test.	
	86.134-78	Running loss test.	
	86.135-78	Dynamometer procedure.	
*	86.135-81	Dynamometer procedure.	38
	86.136-78	Engine starting and restarting.	
	86.137-78	Dynamometer test runs.	
*	86.137-81	Dynamometer test run; gaseous and particulate emissions.	42
	86.138-78	Hot soak test.	
	86.139-78	Reserved.	
*	{86.139-81}	Diesel particulate filter handling and weighing.	51
	86.140-78	Exhaust sample analysis; [gaseous emissions.]	
	86.141-78	Reserved.	
	86.142-78	Records required.	
*	86.142-81	Records required.	53
	86.143-78	Calculations; evaporative emissions.	
	86.144-78	Calculations; gaseous exhaust emissions.	
	86.145-78	Reserved.	
*	{86.145-81}	Calculations; particulate emissions.	57

* = sections contained in this document. For other sections, see 42 FR 32906 (June 28, 1977).

[§86.081-2 Definitions.

The following definitions apply begining with the 1981 model year. §§86.077-2 and 86.078-2 remain in effect.

"Isokinetic" means that the velocity of a gas in a sample stream is the same as the free stream velocity of the gas from which the sample is collected.

"Particulate" means any material (excluding condensed water) collected by filtering a sample of diluted exhaust. Both the filter and the exhaust stream from which the sample is taken must be at or below a temperature of 125°F (51.7°C).]

§86.101 General applicability.

(a) The provisions of this subpart are applicable to 1977 and later model year new light-duty vehicles and light-duty trucks.

[(1) Sections ending in "-81" apply for 1981 and later model years.]

(2) Sections §86.101 through §86.145-78 apply for 1978 and later model years.

(3) Sections §86.177-4 through §86.117-23 apply for the 1977 model year only.

(b) Provisions of this subpart apply to tests performed by both the Administrator and motor vehicle manufacturers.

§86.102 Definitions

The definitions in §§86.077-2, 86.078-2 [and 86.081-2] apply to this subpart.

§86.105-81 Introduction; structure of subpart.

(a) This subpart describes the equipment required and the procedures to follow in order to perform [gaseous] exhaust, [Diesel particulate,] and evaporative emission tests on light-duty vehicles and light-duty trucks. Subpart A sets forth the testing requirements and test intervals necessary to comply with EPA certification procedures.

(b) Three topics are addressed in this subpart. Sections 86.106 through 86.115 set forth the specifications and equipment requirements; §§86.116 through 86.126 discuss calibration methods and frequency; test procedures and data requirements are listed (in approximate order of performance) in §§86.127 through 86.145.

§86.106-81 Equipment required; overview.

(a) This subpart contains procedures for both exhaust and evaporative emissions tests on Diesel or gasoline-fueled light-duty vehicles and light-duty trucks. Certain items of equipment are not necessary for a particular test, e.g., evaporative enclosure when testing Diesel vehicles. Equipment required and specifications are as follows:

(1) Evaporative emission tests, gasoline-fueled vehicles. The evaporative emission test is closely related to and connected with the exhaust emission test. All vehicles tested for evaporative emissions must be tested for exhaust emissions. Further, unless the evaporative emission test is waived by the Administrator under §86.078-26, all gasoline-fueled vehicles must undergo both tests. (Diesel vehicles are excluded from the evaporative emission standard.) Section 86.107 specifies the necessary equipment.

(2) Exhaust emission tests. All vehicles subject to this subpart are tested for exhaust emissions. [The exhaust from gasoline-fueled vehicles is tested for gaseous emissions only, using the CVS concept (§86.109-81). The exhaust from Diesel vehicles is tested for gaseous and particulate emissions. Diesel testing also utilizes the CVS concept of measuring emissions, but requires that a PDP CVS be used, and that it be connected to a dilution tunnel in order to sample particulate emissions (§86.110-81).] All gasoline-

fueled vehicles are either tested for evaporative emissions or undergo a diurnal heat build, Diesel vehicles are excluded from this requirement. Equipment necessary and specifications appear in §§86.108 through 86.114.

(3) Fuel, analytical gas, and driving schedule specifications. Fuel specifications for exhaust and evaporative emissions testing and for mileage accumulation for gasoline-fueled and Diesel vehicles are specified in §86.113. Analytical gases are specified in §86.114.

The EPA Urban Dynamometer Driving Schedule (UDDS) for use in [both gasoline-fueled and Diesel exhaust emissions tests] is specified in §86.115 and Appendix I.

§86.109-81 Exhaust gas sampling system[; gasoline-fueled vehicles].

(a)(1) General. The exhaust gas sampling system [described in this paragraph] is designed to measure the true mass [of gaseous emissions in the exhaust of gasoline-fueled vehicles]. In the CVS concept of measuring mass emissions, two conditions must be satisfied; the total volume of the mixture of exhaust and dilution air must be measured, and a continuously proportioned sample of volume must be collected for analysis. Mass emissions are determined from the sample concentration and totalized flow over the test period.

(2) Positive displacement pump. The positive displacement pump-constant volume sampler (PDP-CVS), Figure [B81-1A], satisfies the first condition by metering at a constant temperature and pressure through the pump. The total volume is measured by counting the revolutions made by the calibrated positive displacement pump. The proportional sample is achieved by sampling at a constant flow rate.

(3) Critical flow venturi. The operation of the critical flow venturi-constant volume sample (CFV-CVS), Figure B78-2, is based upon the principles of fluid dynamics associated with critical flow. Proportional sampling throughout temperature excursions is maintained by use of a small CFV in the sample line.

The variable mixture flow rate is maintained at sonic velocity, which is directly proportional to the square root of the gas temperature, and is computed continuously. Since the pressure and temperature are the same at both venturi inlets, the sample volume is proportional to the total volume.

[(4)] Other systems. Other sampling systems may be used if shown to yield equivalent results, and if approved in advance by the Administrator (e.g., a heat exchanger with the CFV-CVS; an electronic flow integrator without a heat exchanger, with the PDPCVS).

(b) Component description, PDP-CVS. The PDP-CVS, Figure [B81-1A] consists of a dilution air filter and mixing assembly, heat exchanger, positive displacement pump, sampling system, and associated valves, pressure and temperature sensors. The PDP-CVS shall conform to the following requirements:

(1) Static pressure variations at the tailpipe(s) of the vehicle shall remain within ± 5 inches of water (1.2 kPa) of the static pressure variations measured during a dynamometer driving cycle with no connection to the tailpipe(s). (Sampling systems capable of maintaining the static pressure to within ± 1 inch of water (0.25 kPa) will be used by the Administrator if a written request substantiates the need for this closer tolerance.)

(2) The gas mixture temperature, measured at a point immediately ahead of the positive displacement pump, shall be within ± 10°F (5.6°C) of the designed operating temperature at the start of the test. The gas mixture temperature variation from its value at the start of the test shall be limited to ± 10°F (5.6°C) during the entire test. The temperature measuring system shall have an accuracy and precision of ± 2°F (1.1°C).

(3) The pressure gauges shall have an accuracy and precision of ± 3 mm Hg (0.4 kPa).

(4) The flow capacity of the CVS shall be large enough to eliminate water condensation in the system (300 to 350 cfm, 0.140 to 0.165 m^3/s, is sufficient for most vehicles).

(5) Sample collection bags for dilution air and exhaust samples shall be sufficient size so as not to impede sample flow.

(c) Component description, CFV-CVS. The CFV-CVS, Figure B78-2, consists of a dilution air filter and mixing assembly, cyclone particulate separator, sampling venturi, critical flow venturi, sampling system and assorted valves, pressure and temperature sensors. The CFV-CVS shall conform to the following requirements:

(1) Static pressure variations at the tailpipe(s) of the

vehicle shall remain within ± 5 inches of water (1.2 kPa) of the static pressure variations measured during a dynamometer driving cycle with no connection to the tailpipe(s). (Sampling systems capabel of maintaining the static pressure to within ± 1 inch of water (0.25 kPa) will be used by the Administrator if a written request substantiates the need for this closer tolerance.)

(2) The temperature measuring system shall have an accuracy and precision of ± 2°F (1.1°C) and a response time of 0.100 seconds to 62.5 percent of a temperature change (as measured in hot silicone oil).

(3) The pressure measuring system shall have an accuracy and precision of ± 3 mm Hg (0.4 kPa).

(4) The flow capacity of the CVS shall be large enough to virtually eliminate water condensation in the system (300 to 350 cfm, 0.142 to 0.165 m^3/s, is sufficient for most vehicles).

(5) Sample collection bags for dilution air and exhaust samples shall be of sufficient size so as not to impede sample flow.

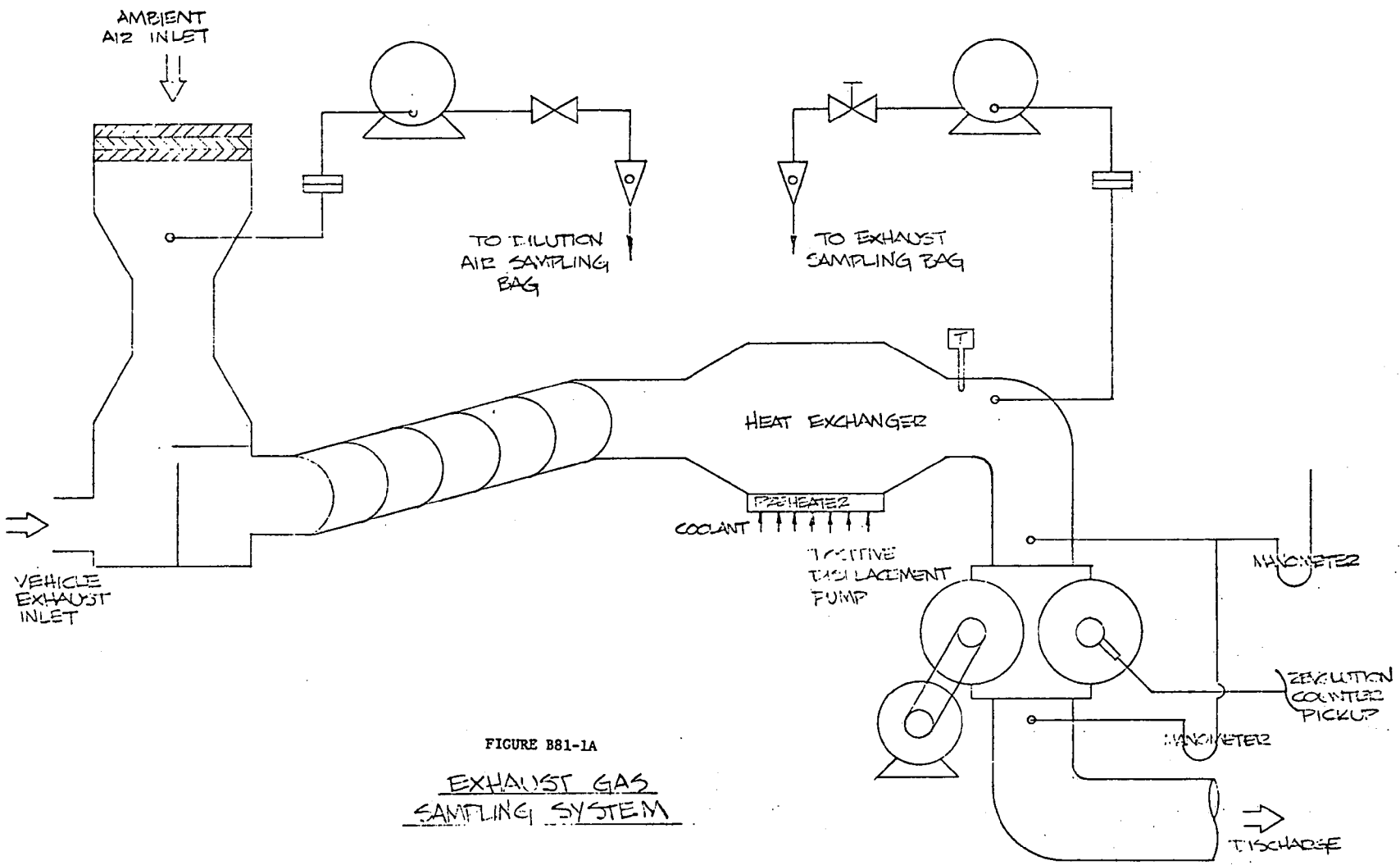

FIGURE B81-1A

EXHAUST GAS
SAMPLING SYSTEM

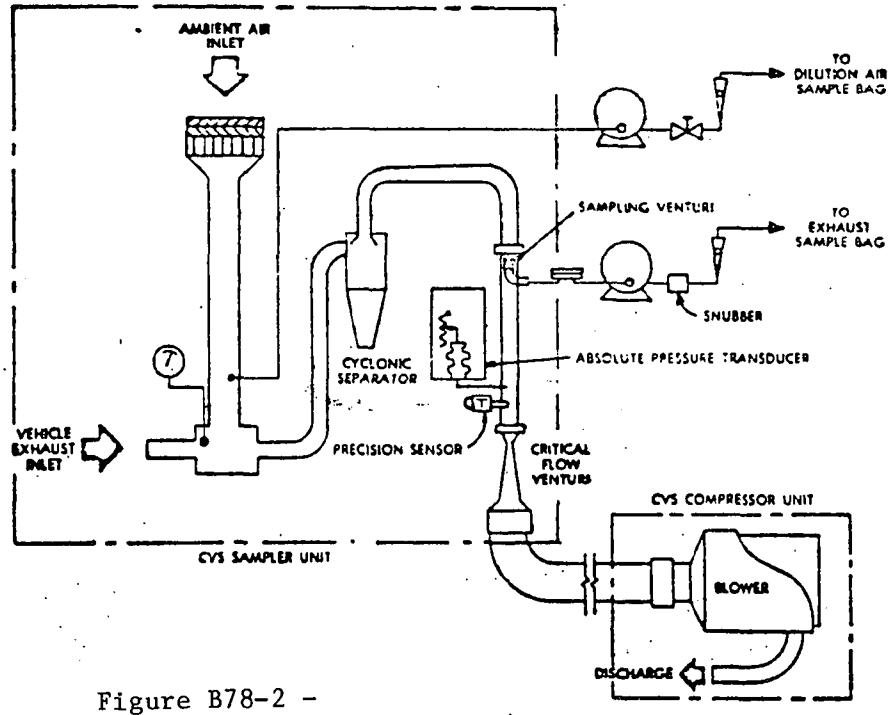

Figure B78-2 -
Exhaust Gas Sampling System (CFV-CVS)

(See Figure B78-3 For Symbol Legend)

[§86.110-81 Exhaust gas sampling system; Diesel vehicles.

(a) General. The exhaust gas sampling system described in this paragraph is designed to measure the true mass of both gaseous and particulate emissions in the exhaust of light-duty Diesel vehicles. This system utilizes the CVS concept (described in §86.109-81) of measuring mass emissions. The mass of gaseous emissions is determined from the sample concentration and totalized flow over the test period. The mass of particulate emissions is determined from a proportional mass sample collected on a filter and from the totalized flow over the test period. General requirements are as follows:

(1) This sampling system requires the use of a PDP-CVS connected to a dilution tunnel. Figure B81-1B is a schematic drawing of the recommended system.

(2) Diesel vehicles require two heated flame ionization detector (HFID) samples for hydrocarbon analysis. The first HFID sample must be taken directly from the diluted exhaust stream through a heated probe which must be installed in the dilution tunnel. The second HFID sample must be taken (through heated lines) from the particulate sample flow after the particulate has been collected by the unheated filter.

(3) Bag, HFID and particulate sampling capabilities as shown in

Figure B81-1B are required to provide both gaseous and particulate emissions sampling capabilities from a single system.

(4) Since various configurations can produce equivalent results, exact conformance with these drawings is not required. Additional components such as instruments, valves, solenoids, pumps, and switches may be used to provide additional information and coordinate the functions of the component systems.

(5) Other sampling systems may be used if shown to yield equivalent results and if approved in advance by the Administrator.

(b) Component description. The components necessary for Diesel exhaust sampling shall meet the following requirements:

(1) The PDP-CVS, Figure B81-1B shall conform to all of the requirements listed for the exhaust gas PDP-CVS (§86.109(b)), with one exception: a flow rate of sufficient volume is required to maintain the diluted exhaust stream, from which the particulate sample flow is taken, at a temperature of 125°F (51.7°C) or less.

(2) The transfer of heat from the vehicle exhaust gas shall be minimized between the point where it leaves the vehicle tail-pipe(s) and the point where it enters the dilution tunnel air-stream. To accomplish this, a short length (not more than 12 feet (365 cm)) of 2.5 in (6.4 cm) I.D. smooth stainless steel

tubing from the tailpipe to the dilution tunnel is required. Short sections of flexible tubing at connection points are allowed.

(3) The dilution tunnel shall be:

(i) sized to permit development of turbulent flow (Reynold's No. >>4000) and complete mixing of the exhaust and dilution air between the mixing orifice and each of the two sample probes (i.e., the isokinetic particulate probe and the heated HC sample probe).

(ii) large enough in diameter to permit isokinetic sampling through the probe as required in paragraph (b)(5) of this section.

(iii) constructed of a material which does not react with the exhaust components.

(4) The temperature of the diluted exhaust stream inside of the dilution tunnel shall be sufficient to prevent water condensation. However, the sample zone dilute exhaust temperature shall not exceed 125°F (51.7°C) at any time during the test.

(5) The particulate sample probe shall be:

(i) installed facing upstream at a point where the dilution air and exhaust are well mixed (i.e., on the tunnel centerline,

approximately 10 tunnel diameters downstream of the point where the exhaust enters the dilution tunnel).

(ii) sufficiently distant (radially) from the total hydrocarbon probe so as to be free from the influence of any wakes or eddies produced by the total hydrocarbon probe.

(iii) sized to permit isokinetic sampling.

(iv) 0.5 in. (1.27 cm) minimum inside diameter.

(v) 5-10 probe diameters from sampling tip to the filter holder which shall be located inside of the tunnel or immediately outside of the tunnel.

(vi) free from sharp bends.

(6) The flow velocity near the particulate probe tip shall be determined by:

(i) measurement; or

(ii) by assuming that it is 10 percent greater than the average velocity of the diluted exhaust stream in the tunnel. The average velocity is defined as the actual volumetric flow divided by the cross sectional area of the dilution tunnel.

(7) The flow rate through the particulate probe shall be:

(i) within 10 percent of isokinetic at all times throughout the test as determined by assuming uniform flow radially across the dilution tunnel; and

(ii) at least 0.35 CFM (0.16 l/s).

(8) The particulate sample flow shall be heated to a temperature of 375° ± 10°F (191° ± 5.6°C) shortly (within two feet (61 cm)) after the particulate has been collected. A portion of this heated sample is extracted for HFID hydrocarbon analysis, and then is returned to the main particulate sample flow before any flow measurements are taken. The main particulate sample flow need not be heated beyond the point where this hydrocarbon sample is taken.

(9) The particulate sample pump shall be:

(i) heated so as to maintain the sample gas temperature at 375 ± 10°F (191 ± 5.6°C).

(ii) of sufficient capacity to maintain isokinetic flow into the probe throughout the test.

(10) The total hydrocarbon probe shall be:

(i) installed facing upstream at a point where the dilution air and exhaust are well mixed (i.e., approximately 10 tunnel diameters downstream of the point where the exhaust enters the dilution tunnel).

(ii) sufficiently distant (radially) from the particulate probe so as to be free from the influence of any wakes or eddies produced by the particulate probe.

(iii) heated to maintain a 375° ± 10°F (191° ± 5.6°C) sample temperature.

(iv) 0.18 in. (0.476 cm) minimum inside diameter.

(v) free from cold spots (i.e., free from spots where the probe wall temperature is less than 365°F).

(11) The dry gas meter shall be located sufficiently far from the tunnel so that the inlet gas temperature remains constant (± 5°F (2.8°C)) and near room temperature.

(c) Filters, particulate sampling.

(1) Filters used for particulate collection must have a collection efficiency of 99.9 percent or greater. The collection efficiency shall be determined by the procedure specified in ASTM

D-2986.

(2) 47 mm nominal diameter is sufficiently large for most Diesel powered vehicles. Larger diameter filters are also acceptable. (Larger diameter filters may be desirable in order to reduce the pressure drop across the filter when testing vehicles which produce large amounts of particulate.)

(3) Glass fiber filters are recommended for particulate collection because of their characteristic low pressure drop. However, glass fiber filters have two characteristic disadvantages: they are hydroscopic; and they are very fragile. Specific steps (§86.112-81 and §86.139-81) must be taken to be sure that neither of these two disadvantages affect the measured mass of particulate. Fluorocarbon coated glass fiber filters are less fragile and less hydroscopic than glass fiber filters, but are considered to have a relatively high pressure loss. However, these filters may be used without prior EPA approval if shown to yield results equivalent to those of glass fiber filters.]

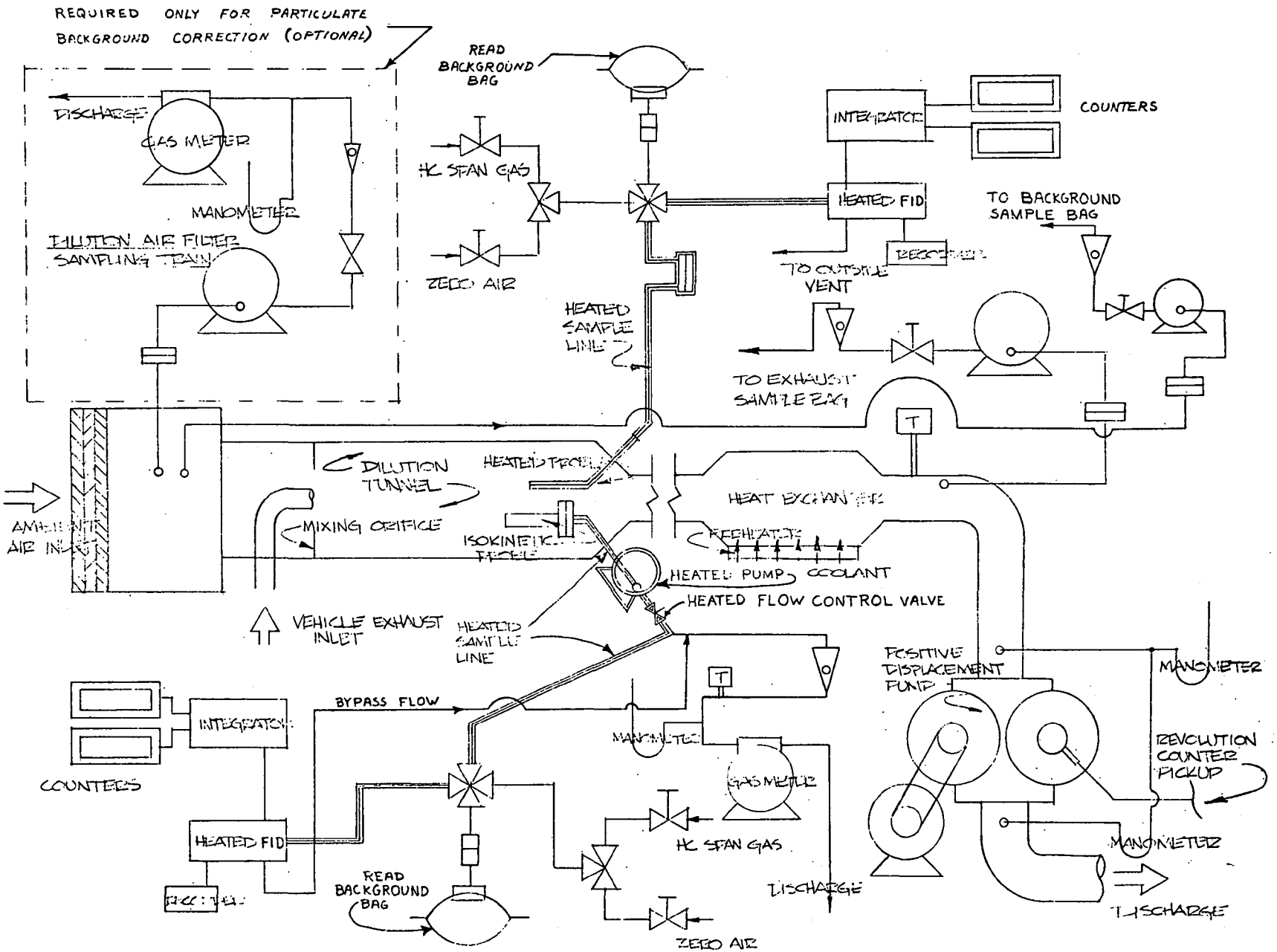

FIGURE B81-1B PARTICULATE SAMPLING SYSTEM

§86.111-81 Exhaust gas analytical system.

(a) Schematic drawings. Figure B78-3 is a schematic drawing of the exhaust gas analytical system. The schematic of the hydrocarbon analysis [trains] for Diesel vehicles [are] shown as part of Figure [B81-1B]. Since various configurations can produce accurate results, exact conformance with either drawing is not required. Additional components such as instruments, valves, solenoids, pumps and switches may be used to provide additional information and coordinate the functions of the component systems.

(b) Major component description. The analytical system, Figure B78-3, consists of a flame ionization detector (FID) for the determination of hydrocarbons, nondispersive infared analyzers (NDIR) for the determination of carbon monoxide and carbon dioxide and a chemiluminescence analyzer (CL) for the determination of oxides of nitrogen. [Two] heated flame ionization [detectors] (HFID) [are] used for the continuous determination of hydrocarbons from Diesel fueled vehicles, Figure [B81-1B]. The exhaust gas analytical system shall conform to the following requirements:

(1) The CL requires that the nitrogen dioxide present in the sample be converted to nitric oxide before analysis. Other types of analyzers may be used if shown to yield equivalent results and if approved in advance by the Administrator.

(2) The carbon monoxide (NDIR) analyzer may require a sample conditioning column containing $CaSO_4$, or indicating silica gel to remove water vapor and containing ascarite to remove carbon dioxide from the CO analysis stream.

(i) If CO instruments which are essentially free of CO_2 and water vapor interference are used, the use of the conditioning column may be deleted, see §§86.122 and 86.144.

(ii) A CO instrument will be considered to be essentially free of CO_2 and water vapor interference if its response to a mixture of 3 percent CO_2 in N_2 which has been bubbled through water at room temperature produces an equivalent CO response, as measured on the most sensitive CO range, which is less than 1 percent of full scale CO concentration on ranges above 300 ppm full scale or less than 3 ppm on ranges below 300 ppm full scale, see §86.122.

(3) For Diesel vehicles [two] continous samples shall be measured using [two] heated analyzer [trains] as shown in Figure [B81-1B]. [Both of these trains] shall include a heated continuous sampling line, a heated particulate filter [(total HC system only)], and a heated hydrocarbon instrument (HFID) complete with heated pump, filter and flow control system.

(i) The response time of [these instruments] shall be less than 1.5 seconds for 90 percent of full scale response.

(ii) Sample transport time from sampling point to inlet of instrument shall be less than 4 seconds.

(iii) The sample line and filter [of the total hydrocarbon system] shall be heated to [maintain a sample gas temperature of 375° ± 10°F (191° ± 5.6°C)].

[(iv) The sample lines carrying the particulate sample flow for hydrocarbon analysis shall be heated to maintain a sample gas temperature of 375° ± 10°F (191° ± 5.6°C) between a point two feet (61 cm.) downstream of the particulate filter and the HFID.]

(c) Other analyzers and equipment. Other types of analyzers and equipment may be used if shown to yield equivalent results and if approved in advance by the Administrator.

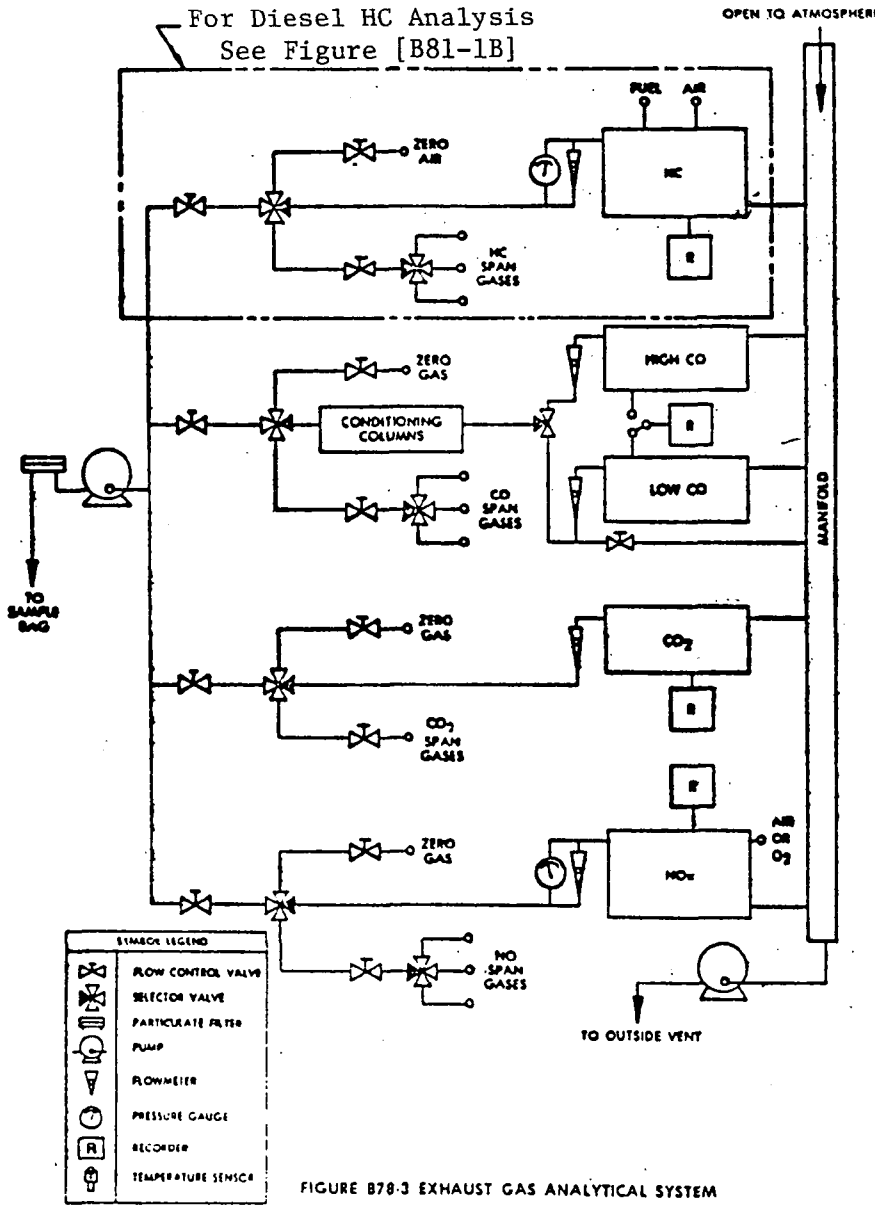

FIGURE B78-3 EXHAUST GAS ANALYTICAL SYSTEM

[§86.112-81 Weighing room and microgram balance specifications.

(a) Ambient conditions.

(1) Temperature. The temperature of the room in which the particulate filters are conditioned and weighed shall be maintained to within ± 5°F (± 2.8°C) of a set point between 68°F (20°C) and 86°F (30°C) during all filter conditioning and filter weighing.

(2) Humidity. The relative humidity of the room in which the particulate filters are conditioned and weighted shall be maintained to within ± 5 percent of a set point between 40 and 50 percent during all filter conditioning and filter weighing.

(3) The room air shall be free from any ambient contaminates (such as dust) that would settle on the particulate filters during their conditioning. It is recommended that two reference filters remain in the weighing room at all times, and that these filters be weighed daily. If the weight of these reference filters changes by more than ± 0.015 percent (typically ± 20 micrograms for a 47 mm glass fiber filter) in any twenty-four hour period, then all filters in the process of being conditioned should be discarded, and any tests repeated.

(b) Microgram balance specifications.

(1) The microgram balance used to determine the weights of all filters shall have a precision (standard deviation) and a readability (micrometer) of one microgram.

(2) The microgram balance used to determine the weights of all filters shall have a minimum weighing range of one gram.]

§86.116-81 Calibrations, frequency and overview.

(a) Calibrations shall be performed as specified in §§86.117 through 86.126.

(b) At least yearly or after any maintenance which could alter background emission levels, enclosure background emission measurements shall be performed.

(c) At least monthly or after any maintenance which could alter calibration, the following calibrations and checks shall be performed:

(1) Calibrate the hydrocarbon analyzers (both evaporative and exhaust instruments), carbon dioxide analyzer, carbon monoxide analyzer, and oxides of nitrogen analyzer.

(2) Calibrate the dynamometer. If the dynamometer receives a weekly performance check (and remains within calibration) the monthly calibration need not be performed.

(3) Perform a hydrocarbon retention check and calibration on the evaporative emission enclosure.

[(4) Calibrate the gas meter(s) used for providing total flow measurement for particulate sampling.]

(d) At least weekly or after any maintenance which could alter calibration, the following calibrations and checks shall be performed:

(1) Check the oxides of nitrogen converter efficiency, and

(2) Perform a CVS system verification.

(3) Run a performance check on the dynamometer. This check may be omitted if the dynamometer has been calibrated within the preceeding month.

(e) The CVS positive displacement pump or Critical Flow Venturi shall be calibrated following initial installation, major maintenance or as necessary when indicated by the CVS system verification (described in §86.119).

(f) Sample conditioning columns, if used in the CO analyzer train, should be checked at a frequency consistent with observed column life or when the indicator of the column packing begins to show deterioration.

[§86.120-81 Gas meter calibration, particulate measurement.

Sampling for particulate emissions requires the use of a gas meter to measure flow through the particulate filter. This meter shall receive initial and periodic calibration as follows:

(a) Install a standard air flow measurement instrument (such as a laminar flow element) upstream of the gas meter. This standard instrument shall measure SCFM air flow with an accuracy of ± 1 percent. Standard conditions are defined as 68°F (293°K) and 760 mm Hg (101.3 kPa). A critical flow orifice or a laminar flow element is recommended as the standard instrument.

(b) Flow air through the calibration system at the isokinetic sampling flow rate of the system and at the back pressure which occurs during the sampling procedure.

(c) When the temperature and pressure in the system have stabilized, measure the gas meter indicated volume over a time period of at least 5 minutes and until a flow volume of at least ± 1 percent accuracy can be determined by the standard instrument. Record the stabilized air temperature and pressure upstream of the gas meter and as required for the standard instrument.

(d) Calculate SCFM as measured by both the standard instrument and the gas meter.

(e) Repeat the procedure of paragraph (b) through (d) above using flow rates which are 10 percent above the isokinetic flowrate and 10 percent below the isokinetic flowrate.

(f) If the SCFM measured by the gas meter differs by more than $\pm$ 1 percent from the standard measurement at any of the three measured flow rates, than a correction shall be made by either of the following two methods:

(1) Mechanically adjust the gas meter so that it agrees within 1 percent of the standard measurement at the three specified flowrates, or

(2) Develop a calibration curve for the gas meter from the three calibration points. A correction factor for the gas meter, at any flow rate which differs by more than 1 percent from the standard instrument is defined as:

$$K_m = \frac{\text{SCFM as measured by standard instrument}}{\text{SCFM as measured by gas meter}} \quad .]$$

§86.121-81 Hydrocarbon analyzer calibration.

[Each] FID hydrocarbon analyzer shall receive the following initial and periodic calibration. [Each HFID] shall be operated [at a temperature of 375° ± 10°F (191° ± 5.6°C)].

(a) Initial and periodic optimization of detector response. Prior to its introduction into service and at least annually thereafter [each] FID hydrocarbon analyzer shall be adjusted for optimum hydrocarbon response. Alternate methods yielding equivalent results may be used, if approved in advance by the Administrator.

(1) Follow the manufacturer's instructions for instrument startup and basic operating adjustment using the appropriate fuel and zero-grade air.

(2) Optimize on the most common operating range. Introduce into the analyzer, a propane in air mixture with a propane concentration equal to approximately 90 percent of the most common operating range.

(3) Select an operating fuel flow rate that will give near maximum response and least variation in response with minor fuel flow variations.

(4) To determine the optimum air flow, use the fuel flow setting determined above and vary air flow.

(5) After the optimum flow rates have been determined, they are recorded for future reference.

(b) Initial and periodic calibration. Prior to its introduction into service and monthly thereafter the FID hydrocarbon analyzer shall be calibrated on all normally used instrument ranges. Use the same flow rate as when analyzing sample.

(1) Adjust analyzer to optimize performance.

(2) Zero the hydrocarbon analyzer with zero-grade air.

(3) Calibrate on each normally used operating range with propane in air calibration gases having nominal concentrations of 15, 30 , 45, 60, 75, and 90 percent of that range. For each range calibrated, if the deviation from a least squares best-fit straight line is 2 percent or less of the value at each data point, concentration values may be calculated by use of single calibration factor for that range. If the deviation exceeds 2 percent at any point, the best-fit non-linear equation which represents the data to within 2 percent of each test point shall be used to determine concentration.

§86.127-81 Test procedures; overview.

The procedures described in this and subsequent sections are used to determine the conformity of vehicles with the standards set forth in Subpart A for light-duty vehicles and light-duty trucks.

(a) The overall test consists of prescribed sequences of fueling, parking and operating conditions. [Vehicles are tested for any or all of the following emissions:

(i) gaseous exhaust HC, CO, NOx, CO_2.

(ii) particulates (Diesels only).

(iii) evaporative HC.]

The evaporative portion of the test procedure occurs before and after the exhaust emission test, and in some cases, during the exhaust emission test.

(b) The [gasoline-fueled] exhaust emission test is designed to determine hydrocarbon, carbon monoxide, and oxides of nitrogen mass emissions while simulating an average trip in an urban area of 7.5 miles (12.1 km). The test consists of engine startups and vehicle operation on a chassis dynamometer, through a specified

driving schedule. A proportional part of the diluted exhaust is collected continuously for subsequent analysis, using a constant volume (variable dilution) sampler.

[(c) The Diesel exhaust emission test is designed to determine particulate and gaseous mass emissions during a test similar to the test in §86.127-81(b). Dilute exhaust is continuously analyzed for total hydrocarbons, and for hydrocarbon retention by particulate material (computed from the difference in integrated responses between the two separate HFID systems). The other gaseous emissions, CO, CO_2 and NOx are collected continuously for analysis as in §86.127-81(b). Simultaneous with the gaseous exhaust collection and analysis, particulates from a proportional part of the diluted exhaust are collected continuously on a filter. The mass of particulate is determined by the procedure described in §86.139-81. This testing requires a dilution tunnel as well as the constant volume sampler.]

(d) The evaporative emission test (gasoline-fueled vehicles only) is designed to determine hydrocarbon evaporative emissions as a consequence of diurnal temperature fluctuation, urban driving, and hot soaks during parking. It is associated with a series of events representative of a motor vehicle's operation, which result in hydrocarbon vapor losses. The test procedure is designed to measure:

(1) Diurnal breathing losses resulting from daily temperature changes, measured by the enclosure technique;

(2) Running losses from suspected sources (if indicated by engineering analysis or vehicle inspection) resulting from a simulated trip on a chassis dynamometer, measured by carbon traps; and

(3) Hot soak losses which result when the vehicle is parked and the hot engine is turned off, measured by the enclosure technique.

(e) Except in cases of component malfunction or failure, all emission control systems installed on or incorporated in a new motor vehicle shall be functioning during all procedures in this subpart. Maintenance to correct component malfunction or failure shall be authorized in accordance with §86.078-25.

§86.132-81 Vehicle preconditioning.

(a) The vehicle shall be moved to the test area and the following operations performed:

(1) The fuel tank(s) shall be drained through the provided fuel tank(s) drain(s) and filled to the prescribed "tank fuel volume" with the specified test fuel, §86.113. For the above operations the evaporative emission control system shall neither be abnormally purged nor abnormally loaded.

(2) Within one hour of being fueled the vehicle shall be placed, either by being driven or pushed, on a dynamometer and operated through one Urban Dynamometer Driving Schedule test procedure, see §86.115 and Appendix I. A gasoline-fueled test vehicle may not be used to set dynamometer horsepower.

(3) For those unusual circumstances where additional preconditioning is desired by the manufacturer, such preconditioning may be allowed with the advance approval of the Administrator. The Administrator may also choose to conduct or require the conduct of additional preconditioning to insure that the evaporative emission control system is stabilized [in the case of gasoline engines, or to insure that the exhaust system is stabilized in the case of Diesel engines.] The additional preconditioning shall consist of an initial one hour minimum soak and, one, two,

or three driving cycles of the UDDS, as described in (a)(2) of this section, each followed by a soak of at least one hour with engine off, engine compartment cover closed and cooling fan off. The vehicle may be driven off the dynamometer following each UDDS for the soak period.

(b) Within five minutes of completion of preconditioning the vehicle shall be driven off the dynamometer and parked. The vehicle shall be stored for not less than 12 hours nor for more than 36 hours (except Diesel vehicles which have no maximum time limitation) prior to the cold start exhaust test. (Gasoline-fueled vehicles undergo a one hour diurnal heat build prior to the cold start exhaust test. A wait of up to one hour is permitted between the end of the diurnal heat build and the beginning of the cold start exhaust test. See §86.130 and Figure B79-5.)

(c) Vehicles to be tested for evaporative emissions shall be processed in accordance with procedures in §§86.133 through 86.138. Vehicles to be tested for exhaust emissions only shall be processed according to §§86.133 through 86.137.

§86.135-81 Dynamometer procedure.

[(a) Dynamometer cycles.]

[(1) Gasoline-fueled vehicles.] The dynamometer run consists of two tests, a "cold" start test after a minimum 12-hour and a maximum 36 hour soak according to the provisions of §86.132 and §86.133 and a "hot" start test following the "cold" start by 10 minutes. Engine startup (with all accessories turned off), operation over the driving schedule, and engine shutdown make a complete cold start test. Engine startup and operation over the first 505 seconds of the driving schedule complete the hot start test. The exhaust emissions are diluted with ambient air and a continuously proportional sample is collected for analysis during each phase. The composite samples collected in bags are analyzed for hydrocarbons, carbon monoxide, carbon dioxide, and oxides of nitrogen. A parallel sample of the dilution air is similarly analyzed for hydrocarbon, carbon monoxide, and oxides of nitrogen.

[(2) Diesel vehicles. The dynamometer run consists of two tests, a "cold" start test after a minimum 12 hour soak according to the provisions of §86.132 and §86.133 and a "hot" start test following the "cold" start by 10 minutes. Engine startup (with all accessories turned off), operation over the UDDS and engine shutdown make a complete cold start test. Engine startup, repeat operation over the complete UDDS and engine

shutdown complete the hot start test. The exhaust emissions are diluted with ambient air in the dilution tunnel as shown in Figure B81-1B. Two isokinetic particulate samples are collected on filters for weighing; one sample is collected during the "cold" start test, and another sample is collected during the "hot" start test. Continuous proportional samples are collected (according to the provisions of §86.110-81) for gaseous emissions analysis (according to the provisions of §86.111-81) during the "cold" start test and the first 505 seconds of the "hot" start test. The composite sample collected in bags are analyzed for carbon monoxide, carbon dioxide, and oxides of nitrogen. Hydrocarbons are sampled and analyzed continuously according to the provisions of §§86.110-81. Parallel samples of the dilution air are similarly analyzed for hydrocarbon, carbon monoxide, and oxides of nitrogen.]

(b) During dynamometer operation, a fixed speed cooling fan shall be positioned so as to direct cooling air to the vehicle in an appropriate manner with the engine compartment cover open. In the case of vehicles with front engine compartments, the fan shall be squarely positioned within 12 inches of the vehicle. In the case of vehicles with rear engine compartments (or if special designs make the above impractical), the cooling fan shall be placed in a position to provide sufficient air to maintain vehicle cooling. The fan capacity shall normally not exceed 5,300 cfm (2.50 m^3/s). If, however, the manufacturer can show

that during field operation the vehicle receives additional cooling, and that such additional cooling is needed to provide a representative test, the fan capacity may be increased or additional fans used if approved in advance by the Administrator.

(c) The vehicle speed as measured from the dynamometer rolls shall be used. A speed vs. time recording, as evidence of dynamometer test validity, shall be supplied on request of the Administrator.

(d) Practice runs over the prescribed driving schedule may be performed at test point, provided an emission sample is not taken, for the purpose of finding the minimum throttle action to maintain the proper speed-time relationship, or to permit sampling system adjustment.

NOTE. - When using two-roll dynamometers a truer speed-time trace may be obtained by minimizing the rocking of the vehicle in the rolls. The rocking of the vehicle changes the tire rolling radius on each roll. This rocking may be minimized by restraining the vehicle horizontally (or nearly so) by using a cable and winch.

(e) The drive wheel tires may be inflated up to a gauge pressure of 45 psi (310 kPa) in order to prevent tire damage. The drive wheel tire pressure shall be reported with the test results.

(f) If the dynamometer has not been operated during the 2 hour period immediately preceding the test it shall be warmed up for 15 minutes by operating at 30 mph (48 kph) using a non-test vehicle or as recommended by the dynamometer manufacturer.

(g) If the dynamometer horsepower must be adjusted manually, it shall be set within 1 hour prior to the exhaust emissions test phase. The test vehicle shall not be used to make this adjustment. Dynamometers using automatic control of preselectable power settings may be set anytime prior to the beginning of the emissions test.

(h) The driving distance as measured by counting the number of dynamometer roll or shaft revolutions, shall be determined for the transient cold start, stabilized cold start, and transient hot start [(and stabilized hot start for Diesel vehicles)] phases of the test. The revolutions shall be measured on the same roll or shaft used for measuring the vehicle's speed.

§86.137-81 Dynamometer test run, gaseous [and particulate] emissions.

[(a) General.]

[(1) Gasoline-fueled vehicles.] The vehicle shall be allowed to stand with the engine turned off for a period of not less than 12 hours or more than 36 hours before the cold start exhaust emission test. The cold start exhaust test shall follow the diurnal breathing loss test by not more than one hour. The vehicle shall be stored prior to the emission test in such a manner that precipitation (e.g., rain or dew) does not occur on the vehicle. The complete dynamometer test consists of a cold start drive of 7.5 miles (12.1 km) and simulates a hot start drive of 7.5 miles (12.1 km). The vehicle is allowed to stand on the dynamometer during the 10 minute time period between the cold and hot start tests. The cold start test is divided into two periods. The first period, representing the cold start "transient" phase, terminates at the end of the deceleration which is scheduled to occur at 505 seconds of the driving schedule. The second period, representing the "stabilizied" phase, consists of the remainder of the driving schedule including engine shutdown. The hot start test similarly consists of two periods. The first period, representing the hot start "transient" phase, terminates at the same point in the driving schedule as the first period of the cold start test. The second period of the hot start test,

"stabilized" phase, is assumed to be identical to the second period of the cold start test. Therefore, the hot start test terminates after the first period (505 seconds) is run.

[(2) Diesel vehicles. The vehicle shall be allowed to stand with the engine turned off for a period of not less than 12 hours or more than 36 hours before the cold start exhaust emission test. The vehicle shall be stored prior to the emission test in such a manner that precipitation (e.g., rain or dew) does not occur on the vehicle. The complete dynamometer test consists of a cold start drive of 7.5 miles (12.1 km) and a hot start drive of 7.5 miles (12.1 km). The vehicle is allowed to stand on the dynamometer during the 10 minute time period between the cold and hot start tests. The cold start test is divided into two periods. The first period, representing the cold start "transient" phase, terminates at the end of the deceleration which is scheduled to occur at 505 second of the driving schedule. The second period, representing the "stabilized" phase, consists of the remainder of the driving schedule including engine shutdown. The hot start test similarly consists of two periods. The first period, representing the hot start "transient" phase, terminates at the same point in the driving schedule as the first period of the cold start test. The second period of the hot start test, "stabilized" phase, is identical to the second period of the cold start test.]

(b) The following steps shall be taken for each test:

(1) Place drive wheels of vehicle on dynamometer without starting engine.

(2) Open the vehicle engine compartment cover and position the cooling fan.

(3) With the sample selector valves in the "standby" position connect evacuated sample collection bags to the dilute exhuast and dilution air sample collection systems.

(4) Start the CVS (if not already on), the sample pumps, the temperature recorder, the vehicle cooling fan and the heated hydrocarbon analysis [recorders] (Diesels only). (The heat exchanger of the constant volume sampler, if used, Diesel hydrocarbon analyzer continuous sample [lines] and [filters] (if applicable) should be preheated to their respective operating temperatures before the test begins.)

(5) Adjust the sample flow rates to the desired flow rate and set the gas flow measuring devices to zero.

[(i) For gaseous samples the minimum flow rate is 0.17 CFM (0.08 l/s).

(ii) For particulate samples the minimum flow rate is 0.35 CFM (0.16 l/s).]

NOTE. - CFV-CVS sample flowrate is fixed by the venturi design.

(6) Attach the flexible exhaust tube to the vehicle tail-pipe(s).

[(7) Carefully install the particulate sample filter into the filter holder for Diesel tests. The filter must be handled only with forceps or tongs. Rough or abrasive filter handling will result in erroneous weight determination.]

[(8)] Start the gas flow measuring device, position the sample selector valves to direct the sample flow into the "transient" exhaust sample bag and the "transient" dilution air sample bag, (turn on [each integrator of each] Diesel hydrocarbon analyzer system, mark [each] recorder chart, [start the particulate sample pump, and record the dry gas meter reading,] (if applicable), turn the key on, and start cranking the engine.

[(9)] Fifteen seconds after the engine starts, place the transmission in gear.

[(10)] Twenty seconds after the engine start, begin the initial vehicle acceleration of the driving schedule.

[(11)] Operate the vehicle according to the Urban Dynamo-

meter Driving Schedule (§86.115).

[NOTE. During Diesel testing, adjust the flow rate through the isokinetic sample probe to maintain a constant value within ± 10 percent of isokinetic flow. Record the average temperature and pressure at the gas meter inlet. If isokinetic flow cannot be maintained because of high particulate loading on the filter, the test shall be terminated. The test shall be rerun using a smaller diameter probe, 0.5 in (1.27 cm) minimum. or larger diameter filter, or both, and appropriate flow rate to maintain isokinetic sampling.]

[(12)] At the end of the deceleration which is scheduled to occur at 505 seconds, simultaneously switch the sample flows from the "transient" bags to the "stabilized" bags, switch off gas flow measuring device No. 1 (and [both No. 1] Diesel hydrocarbon [integrators], mark [both] Diesel hydrocarbon recorder [charts]) and start gas flow measuring device No. 2 (and [both No. 2] Diesel hydrocarbon [integrators]). Before the acceleration which is scheduled to occur at 510 seconds, record the measured roll or shaft revolutions and reset the counter or switch to a second counter. As soon as possible transfer the "transient" exhaust and dilution air samples to the analytical system and process the samples according to §86.140 obtaining a stabilized reading of the exhaust sample on all analyzers within 20 minutes of the end

of the sample collection phase of the test.

[(13)] Turn the engine off 2 seconds after the end of the last deceleration (at 1,369 seconds).

[(14)] Five seconds after the engine stops running, simultaneously turn off gas flow measuring device No. 2 (and [both No. 2] Diesel hydrocarbon [integrators], mark [both] hydrocarbon recorder [charts], [and turn off the particulate sample pump,] (if applicable) and position the sample selector valves to the "standby" position. Record the measured roll or shaft revolutions, [dry gas meter reading,] and re-set the counter. As soon as possible, transfer the "stabilized" exhaust and dilution air samples to the analytical system and process the samples according to §86.140 obtaining a stabilized reading of the exhaust sample on all analyzers within 20 minutes of the end of the sample collection phase of the test. [Carefully remove the first particulate sample filter from the holder, and place in a clean covered glass petri dish, if applicable.]

[(15)] Immediately after the end of the sample period turn off the cooling fan and close the engine compartment cover.

[(16)] Turn off the CVS or disconnect the exhaust tube from the tailpipe(s) of the vehicle.

[(17)] Repeat the steps in paragraph (b)(2) through [(11)] of this section for the hot start test, except only one evacuated sample bag is required for sampling exhaust gas and one for dilution air. The step in paragraph (b)[(8)] of this section shall begin between 9 and 11 minutes after the end of the sample period for the cold start test.

[(18)(i) Gasoline-fueled vehicles.] At the end of the deceleration which is scheduled to occur at 505 seconds, simultaneously turn off gas flow measuring device No. 1 and postion the sample selector valve to the "standby" position, (Engine shutdown is not part of the hot start test sample period.)

[(ii) Diesel vehicles.

(1) At the end of the deceleration which is scheduled to occur at 505 seconds, simultaneously turn off gas flow measuring device No. 1 and both No. 1 Diesel hydrocarobn integrators, mark both Diesel hydrocarbon recorder charts and start both No. 2 Diesel hydrocarbon integrators, and position the sample selector valve to the "standby" position.

(2) Continue to operate the vehicle according to the Urban Dynamometer Driving Schedule (§86.115) and continue to analyze hydrocarbons on both HFIDs and to collect particulates on the filter during the "stabilized" phase of the hot start test.

(3) Turn the engine off 2 seconds after the end of the last deceleration (at 1,369 seconds)

(4) Five seconds after the engine stops running, simultaneously turn off both No. 2 Diesel hydrocarbon integrators, mark both hydrocarbon recorder charts, and turn off the particulate sample pump. Record the measured roll or shaft revolutions, dry gas meter reading, and re-set the counter. Remove the second particulate sample filter from the holder, and place in a clean covered glass petri dish.

(5) As soon as possible, and in no case longer than 20 minutes after the end of this portion of the test transfer the two particulate filters to the weighing room for post-test conditioning.]

[(19)] As soon as possible transfer the hot start "transient" exhaust and dilution air samples to the analytical system and process the samples according to §86.140 obtaining a stabilized reading of the exhaust sample on all analyzers within 20 minutes of the end of the sample [bag] collection phase of the test.

[(20)] Disconnect the exhaust tube from the vehicle tailpipe(s) and drive the vehicle from dynamometer.

[(21)] The CVS may be turned off, if desired.

[(22)] Vehicles to be tested for evaporative emissions will proceed according to §86.138. For all others this completes the test sequence.

[§86.139-81 Diesel particulate filter handling and weighing.

(a) Twenty-four hours before the test, place each filter in an open, but protected, glass petri dish in the weighing room which meets the humidity and temperature specifications of §86.112-81.

(b) At the end of the 24 hour period, weigh the filter on a balance having a precision of one microgram. Record this weight. This reading is the tare weight.

(c) The filter shall then be stored in a covered glass petri dish.

(d) If the filter is not used within 4 hours of the weighing, it shall be re-weighed.

(e) After the test, and after the sample filter is returned to the weighing room, condition it for a 24 hour period. Then weigh a second time. This last reading is the gross weight of the filter. Record this weight.

(f) The net weight (Pe) is the gross weight minus the tare weight.

NOTE. - (i) Filter material from glass fiber filters can be

lost during handling, and especially when removing the filter from the filter holder. This material loss will result in an erroneous (low) measurement of the particulate mass. These handling losses must be minimized.

(ii) Should the sample on the filter contact the petri dish or any other surface, the test is void and must be re-run.]

§86.142-81 Records required.

The following information shall be recorded with respect to each test:

(a) Test number.

(b) System of device tested (brief description).

(c) Date and time of day for each part of the test schedule.

(d) Instrument operator.

Driver or operator.

(f) Vehicle: ID number, manufacturer, model year, standards, engine family, evaporative emissions family, basic engine description (including displacement, number of cylinders, and catalysts usage), fuel system (including number of curburetors, number of carburetor barrels, fuel injection type and fuel tank(s) capacity and location), engine code, gross vehicle weight rating, inertia weight class, actual curb weight at zero miles, actual road load at 50 mph, transmission configuration, rpm and drive wheel tire pressure, as applicable.

(g) Indicated road load power absorption at 50 mph (80 kph)

and dynamometer serial number. As an alternative to recording the dynamometer serial number, a reference to a vehicle test cell number may be used, with the advance approval of the Administrator, provided the test cell records shown the pertinent information.

(h) All pertinent instrument information such as tuning - gain - serial number - detector number - range. As an alternative, a reference to a vehicle test cell number may be used, with the advance approval of the Administrator, provided test cell calibration records show the pertinent instrument information.

(i) Recorder charts: Identify zero, span, exhaust gas, and humidity.

(j) Test cell barometric pressure, ambient temperature and humidity.

NOTE. - A central laboratory barometer may be used: Provided, That individual test cell barometric pressures are shown to be within $\pm$ 0.1 percent of the barometric pressure at the central barometer location.

(k) Fuel temperatures, as prescribed.

(l) Pressure of the mixture of exhaust and dilution air entering the CVS metering device, the pressure increase across

the device, and the temperature at the inlet. The temperature may be recorded continuously or digitally to determine temperature variations.

(m) The number of revolutions of the positive displacement pump accumulated during each test phase while exhaust samples are being collected. The number of standard cubic feet metered by a critical flow venturi during each test phase would be the equivalent record for a CFV-CVS.

(n) The humidity of the dilution air.

NOTE. - If conditioning columns are not used (see §86.122 and §86.144) this measurement can be deleted. If the conditioning columns are used and the dilution air is taken from the test cell, the ambient humidity can be used for this measurement.

(o) Temperature [of the gas in both heated sample lines and the temperature of the control system of both heated hydrocarbon detectors] (for Diesel vehicles only).

(p) The driving distance for each of the three [(four for Diesels)] phases of the test, calculated from the measured roll or shaft revolution.

[(q) <u>Additional required records for Diesel vehicles</u>.

(1) Pressure and temperature of the dilute exhaust mixture (and dilution air if sampled) at the inlet to the gas meter used for particulate sampling.

(2) The maximum temperature of the dilute exhaust mixture inside the dilution tunnel near the inlet of the isokinetic probe.

(3) Dry gas meter readings at the start of each sample period and at the end of each sample period.

(4) The stabilized pre-test weight and post test weight of each particulate sample filter.

(5) The temperature and humidity of the ambient air in which the particulate filters were stabilized.]

[§86.145-81 Calculations; particulate emissions.

(a) The final reported test results for the mass of particulate (M_p) in grams/mile shall be computed as follows:

$$M_p = 0.43(M_{p_1}/(D_{ct} + D_{cs})) + 0.57(M_{p_2}/(D_{ht} + D_{hs}))$$

where:

M_{p_1} = Mass of particulate determined from the cold start test.

M_{p_2} = Mass of particulate determined from the hot start test.

D_{ct} = the measured driving distance from the "transient" phase of the cold start test in miles.

D_{cs} = The measured driving distance from the "stabilized" phase of the cold start test, in miles.

D_{ht} = The measured driving distance from the "transient" phase of the hot start test, in miles.

D_{hs} = The measured driving distance from the "stabilized" phase of the hot start test, in miles.

(b) The mass of particulate for either the cold start test or the hot start test is determined as follows:

$$M_{p_j} = V_{mix_j} \times \left[\frac{P_{e_j}}{V_{ep_j}} - \frac{P_b}{V_{bp}}(1 - 1/DF)\right]$$

where:

(1) j = 1 or 2 depending on which test the mass of particulate is being determined for (i.e., the cold start test, or the hot start test).

(2) V_{mix} = total dilute exhaust volume in cubic feet per test, corrected to standard conditions 528°R (293K) and 760 mm Hg (101.3 kPa). V_{mix} is further defined in §86.144.

(3) P_e = mass of particulate per test on the exhaust filter, grams.

(4) P_b = mass of particulate on the "background" filter, grams.

(i) The background particulate level, P_b, inside the dilution air filter box at EPA is very low. P_b will be assumed = 0, and backgound particulate samples will not be taken with each exhaust sample. It is recommended that background particulate

checks be made periodically to verify the low level.

(ii) Any manufacturer may make the same assumption without prior EPA approval.

(iii) If P_b is assumed = 0, then no backgound correction is made and CO_2 analysis during the second stabilized test is not required since DF no longer has an effect in determining M_{p_j}. The equation for particulate mass emissions then reduces to:

$$M_{p_j} = \frac{V_{mix_j} \times P_{e_j}}{V_{ep_j}}$$

(6) V_{ep} = total volume of sample pulled through the filter, cubic feet at standard conditions.

$$V_{ep} = \frac{K_m \times V_{ap} \times (P_{bar} + P_{ip}) \times 528}{T_{ip} \times 760}$$

where:

(i) K_m = dilute exhaust gas meter correction factor determined in §85.120.

(ii) V_{ap} = actual dilute exhaust sample volume, cubic feet.

(iii) P_{bar} = barometric pressure, mm Hg.

(iv) P_{ip} = pressure elevation above ambient measured at the inlet to the dilute exhaust sample gas meter, mm Hg. For most gas meters with unrestricted discharge P_{ip} is negligible and can be assumed = 0.

(v) T_{ip} = average temperature of the dilute exhaust sample at the inlet to the gas meter, °R.

(7) V_{bp} = total volume of the background sample, cubic feet at standard conditions. (V_b is not required if P_b is assumed = 0.) It is calculated using the following formula:

$$V_b = \frac{K_{mb} \times V_{ab} \times (P_{bar} + P_{ib}) \times 528}{T_{ib} \times 760}$$

where:

(i) K_{mb} = background gas meter correction factor determined in §85.120.

(ii) V_{ab} = actual backgound sample volume, cubic feet.

(iii) P_{bar} = barometric pressure, mm Hg.

(iv) P_{ib} = pressure elevation above ambient measured at the inlet to the background gas meter, mm Hg. For most gas meters with unrestricted discharge P_i is negligible and can be assumed = 0.

(v) T_{ib} = average temperature of the background sample at the inlet to the gas meter, °R.

(8) DF = dilution factor. (DF is not required if P_b is assumed = 0.) DF is defined in §86.144-78.

NOTE. - For the second stabilized bag, the same DF which applied to the first stabilized bag may be used.]