United States
Environmental Protection
Agency

Region 10
1200 Sixth Avenue
Seattle WA 98101

EPA-10-AK-Valdez-NPDES-79
December 1979
EPA 910/9-79-064

Environmental Impact Statement

Alaska Petrochemical Company

Refining and Petrochemical Facility
Valdez, Alaska

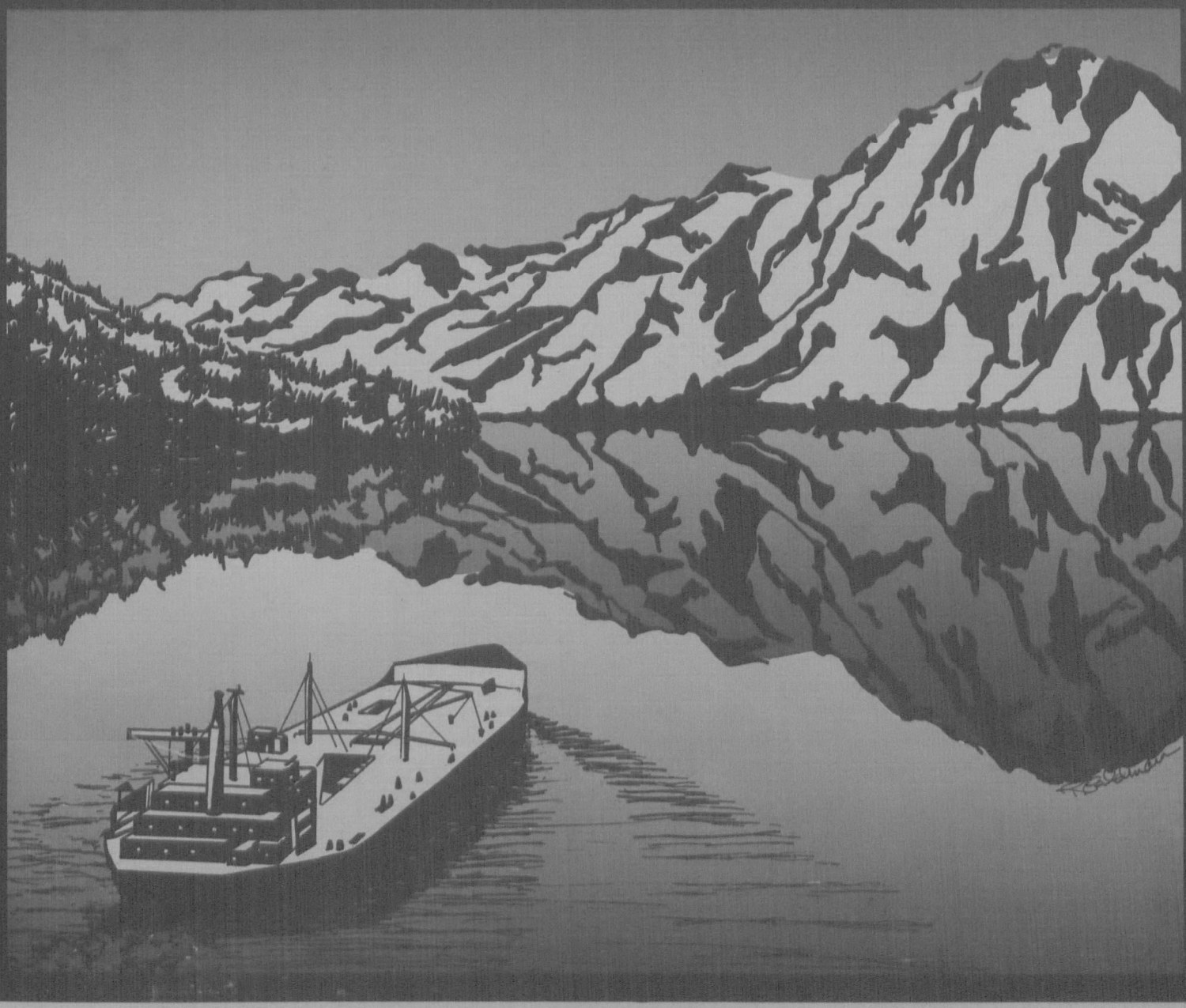

ENVIRONMENTAL IMPACT STATEMENT

Alaska Petrochemical Company

Refinery and Petrochemical Facility

Valdez, Alaska

APPENDIX VOLUME II

APPENDIX TABLE OF CONTENTS

VOLUME I

Geotechnical

Hydrology

Ecosystems

Oceanography

VOLUME II

Socioeconomics

Refinery Processes

Archaeology

Acoustics

APPENDIX VOLUME II

TABLE OF CONTENTS

	Page No.
SOCIOECONOMICS	II-1
Land Requirements and External Appearance	II-11
Offsite Operations	II-18
Labor Force	II-22
Basic Alternatives to the Project	II-27
Transportation Alternatives	II-32
Socioeconomics - Existing Conditions	II-34
Socioeconomic Impacts	II-133
REFINERY PROCESSES AND ALTERNATIVES	II-226
Marine Activities	II-227
Feedstock and Process Raw Materials Sources	II-238
Feedstock and Process Raw Materials Availability	II-241
Description of Major Processes	II-247
Material Balances	II-287
Intermittent Process Operations	II-294
Wastewater Treatment	II-309
Alternate Process Design Considerations	II-328
Energy Requirements	II-341
Evaluation Fuel Oil as an Energy Source	II-345
Evaluation of Coal as an Energy Source	II-351
Evaluation of Refinery By-product Gas as an Energy Source	II-418
Evaluation of Low BTU Gas as an Energy Source	II-428
Preferred Energy Source	II-481
Air Quality Standards Compliance	II-485
Alternate Methods of Wastewater Disposal	II-500
Alternate Cooling Systems	II-510
ARCHAEOLOGY AND HISTORIC FEATURES	II-526
ACOUSTIC ENVIRONMENT	II-559

If an inconsistency appears between information in the Draft Environmental Impact Statement and Volumes I and II of the Technical Appendices, the DEIS represents the most current information. The technical reports in the Appendices were prepared over a period of several months, concurrent with Alpetco's design development activities. There were completed prior to preparation of the DEIS and as a result may not reflect minor project description changes that occurred subsequent to completion of the reports. The latest available information has, however, been considered in the main text of the DEIS.

Socioeconomics

SOCIOECONOMICS

TECHNICAL APPENDIX

SOCIOECONOMIC IMPACTS

Draft Environmental Impact Statement

Alpetco Petrochemical Complex
Valdez, Alaska

Prepared by
CCC/HOK Architects and Planners

Contributing Authors:
Richard Morehouse, Land Use
Gordon Harrison, Population, Economics and Project Alternatives
Steve Reiner, Public Facilities, and Housing

with

Michael Bates, Alan M. Voorhees & Assoc., Transportation
Marsha Bennett, Housing Survey

October, 1979

TABLE OF CONTENTS

SECTION NO.	TITLE	PAGE
3.3	LAND REQUIREMENTS AND EXTERNAL APPEARANCE	II-11
3.5	OFFSITE OPERATIONS	
3.5.5	TRANSPORTATION	II-18
3.5.5.1	LAND	II-18
3.5.5.2	AIR	II-19
3.5.5.3	MARINE	II-20
3.6	LABOR FORCE	
3.6.1	CONSTRUCTION LABOR FORCE	II-22
3.6.2	OPERATION WORKFORCE	II-22
4.1	BASIC ALTERNATIVES TO THE PROJECT	
4.1.1	INTRODUCTION	II-27
4.1.2	NO PROJECT	II-27
4.1.3	LOCATE REFINERY ON THE WEST COAST OUTSIDE ALASKA	II-30
4.1.4	REGULATORY MEASURES THAT WOULD ELIMINATE NEED FOR THE PROJECT	II-31
4.4	PLANT DESIGN ALTERNATIVES	
4.4.8	ALTERNATIVE TRANSPORTATION ROUTES RELATIVE TO THE SITE	II-32
5.8	SOCIOECONOMICS	II-34
5.8.1	POPULATION CHARACTERISTICS	II-35
5.8.2	EMPLOYMENT AND ECONOMIC BASE	
5.8.2.1	EMPLOYMENT AND ECONOMIC BASE	II-46
5.8.3	PUBLIC SECTOR REVENUES AND SERVICES	II-55
5.8.4	PUBLIC SERVICES	II-60
5.8.5	LAND USE	II-73
5.8.5.1	REGIONAL LAND USE AND RESOURCE DEVELOPMENT	II-73
5.8.5.2	SCENIC RESOURCES	II-76
5.8.5.3	RECREATION RESOURCES	II-76
5.8.5.4	VALDEZ CITY LAND USE	II-81
5.8.5.5	RESIDENTIAL LAND USE	II-84
5.8.5.6	EMERGING LAND USE PATTERNS IN VALDEZ	II-99

SECTION NO.	TITLE	PAGE
5.8.6	TRANSPORTATION SYSTEMS	II-109
	5.8.6.1 LAND	II-109
	5.8.6.2 AIR	II-114
	5.8.6.3 MARINE	II-117
5.8.7	UTILITIES SYSTEMS	II-119
	5.8.7.1 SEWER SYSTEM	II-120
	5.8.7.2 WATER SYSTEM	II-123
	5.8.7.3 SOLID WASTE	II-125
	5.8.7.4 ELECTRICITY	II-126
	5.8.7.5 TELEPHONE	II-128
5.8.8	LIFESTYLE AND CULTURE	II-129
6.10 SOCIOECONOMIC IMPACTS		II-133
6.10.1	POPULATION AND EMPLOYMENT	II-134
	6.10.1.1 LOCAL EMPLOYMENT AND POPULATION IMPACTS	II-134
	6.10.1.2 STATEWIDE EMPLOYMENT AND POPULATION IMPACTS	II-148
6.10.2	INCOME	II-152
6.10.3	LOCAL ECONOMY	II-169
6.10.4	PUBLIC FISCAL IMPACTS	II-171
6.10.5	PUBLIC SERVICES AND FACILITIES	II-175
6.10.6	LAND USE	II-182
	6.10.6.1 REGIONAL IMPACTS	II-182
	6.10.6.2 VALDEZ IMPACTS	II-183
	6.10.6.3 RESIDENTIAL USE	II-189
6.10.7	TRANSPORTATION SYSTEM	II-198
	6.10.7.1 LAND	II-198
	6.10.7.2 AIR	II-202
	6.10.7.3 MARINE TRANSPORTATION (ONSHORE ELEMENT)	II-205
6.10.8	UTILITIES SYSTEMS	II-206
	6.10.8.1 SEWER SYSTEM	II-206
	6.10.8.2 WATER SYSTEM	II-206
	6.10.8.3 SOLID WASTE	II-207
	6.10.8.4 ELECTRICITY	II-207

SECTION NO.	TITLE	PAGE
6.10.9	LIFE-STYLE AND CULTURE	II-209
6.10.10	MITIGATION MEASURES	II-211
	6.10.10.1 PUBLIC SERVICES	II-211
	6.10.10.2 LAND USE	II-211
	6.10.10.3 TRANSPORTATION	II-214
6.10.11	UNAVOIDABLE ADVERSE IMPACTS	II-216
9.1	MEETINGS WITH GOVERNMENTAL AND OTHER ENTITIES	II-217
ENGLISH - METRIC CONVERSION TABLE		II-225
11.0 BIBLIOGRAPHY		

LIST OF TABLES

TABLE NO.	TITLE	PAGE
3.6.1-1	ALPETCO CONSTRUCTION MANPOWER REQUIREMENTS	II-23
3.6.1-2	TRADE SKILL REQUIREMENTS, ALPETCO CONSTRUCTION	II-24
3.6.2-1	ALPETCO OPERATIONS MANPOWER REQUIREMENTS	II-25
3.6.2-2	MAJOR JOB CLASSIFICATIONS FOR ALPETCO OPERATIONS WORKFORCE, SUBMANAGERIAL LEVEL	II-26
5.8.1-1	POPULATION OF VALDEZ AND ALASKA, 1900-1970	II-37
5.8.1-2	1978 POPULATION OF VALDEZ BY AGE	II-38
5.8.1-3	SCHOOL-AGE CHILDREN IN POPULATION	II-39
5.8.1-4	ENROLLMENT IN VALDEZ PUBLIC SCHOOLS 1967-1978	II-40
5.8.1-5	VALDEZ POPULATION BY ETHNIC GROUP, 1978	II-41
5.8.1-6	HOUSING SURVEY, CCC/HOK, MAY 1979	II-42
5.8.1-7	NUMER AND TYPES OF INHABITED DWELLINGS IN VALDEZ, 1978	II-43
5.8.1-8	VALDEZ POPULATION BY TYPE OF HOUSING	II-44
5.8.1-9	COMPARISON OF VARIOUS ESTIMATES OF CURRENT VALDEZ POPULATION	II-45
5.8.2.1-1	ESTIMATED VALDEZ EMPLOYMENT, 1968	II-48
5.8.2.1-2	1978 VALDEZ EMPLOYMENT BY INDUSTRY	II-49
5.8.2.1-3	VALDEZ EMPLOYMENT BY INDUSTRY, OCTOBER 1977 THROUGH SEPTEMBER 1978	II-50
5.8.2.1-4	COMPARISON OF DEPT. OF LABOR, CITY OF VALDEZ EMPLOYMENT ESTIMATES BY INDUSTRY, JUNE 1978	II-51
5.8.2.1-5	1978 VALDEZ LABOR FORCE BY OCCUPATION	II-52
5.8.2.1-6	UNEMPLOYMENT AND PART-TIME EMPLOYMENT OF VALDEZ CIVILIAN LABOR FORCE, 1978	II-53
5.8.2.1-7	COMPARISON OF VARIOUS LABOR WAGE RATES, VALDEZ, ANCHORAGE AND SITKA (1978)	II-54
5.8.3-1	SUMMARY OF VALDEZ CITY BUDGET, 1978 - 1979	II-57
5.8.3-2	CITY OF VALDEZ, GENERAL FUND EXPENDITURES 1968-1980	II-58
5.8.3-3	COMPARISON OF SELECTED PUBLIC FISCAL MEASURES, CITY OF VALDEZ AND MUNICIPALITY OF ANCHORAGE 1978	II-59

TABLE NO.	TITLE	PAGE
5.8.4-1	VALDEZ CITY SCHOOLS SEPTEMBER ENROLLMENT REPORT 1967-1979	II-66
5.8.4-2	COMPARISON OF STUDENT ENROLLMENT AND SCHOOL DESIGN CAPACITY 1979	II-67
5.8.4-3	VALDEZ CITY SCHOOLS SEPTEMBER ENROLLMENT REPORT PROJECTIONS IN THE ABSENCE OF THE ALPETCO PROJECT	II-68
5.8.4-4	SUMMARY OF VALDEZ FIRE DEPARTMENT RESPONSES 72-79	II-69
5.8.4-5	FIRE FIGHTING EQUIPMENT	II-70
5.8.4-6	CRIMINAL COMPLAINTS AND ARRESTS - VALDEZ 2974-1975	II-71
5.8.4-7	CRIME STATISTICS - VALDEZ 1976-1978	II-72
5.8.5.5-1	TOTAL OCCUPIED HOUSING IN VALDEZ BY TENANCY	II-91
5.8.5.5-2	TOTAL HOUSING IN VALDEZ BY CONDITION OF HOUSING	II-92
5.8.5.5-3	TOTAL HOUSING IN VALDEZ SUMMARY OF VISUAL SURVEY	II-93
5.8.5.5-4	VACANT HOUSING IN VALDEZ BY CONDITION OF HOUSING	II-94
5.8.5.5-5	SUMMARY OF VISUAL SURVEY OF NEW TOWNSITE	II-95
5.8.5.5-6	SUMMARY OF VISUAL SURVEY FOR ZOOK SUBDIVISION AND AIRPORT AREA	II-96
5.8.5.5-7	SUMMARY OF VISUAL SURVEY FOR ROBE RIVER SUBDIVISION AREA	II-97
5.8.5.5-8	SUMMARY OF VISUAL SURVEY FOR RICHARDSON HIGHWAY, ALPINE WOODS AND NORDIC SUBDIVISIONS	II-98
5.8.6.1-1	1978 TRAFFIC VOLUMES VALDEZ LOCAL AND REGIONAL	II-110
5.8.6.1-2	TRUCK TRAFFIC CHARACTERISTICS - VALDEZ SCALEHOUSE	II-113
5.8.6.2-1	VALDEZ AIRPORT OPERATIONS 1975-1979	II-115
5.8.7.1-1	WATER SEWAGE TREATMENT PLANT GALLONS PER DAY	II-122
5.8.7.5-1	NUMBER OF TELEPHONES IN SERVICE 1974-1979	II-128
6.10.1.1-1	TOTAL CONSTRUCTION MANPOWER REQUIREMENTS IN VALDEZ DURING ALPETCO PROJECT	II-143
6.10.1.1-2	PEAK EMPLOYMENT AND POPULATION IMPACTS, CONSTRUCTION AND OPERATION PHASE	II-144
6.10.1.1-3	INCREMENTAL EMPLOYMENT AND POPULATION IN VALDEZ DURING ALPETCO CONSTRUCTION, QUARTERLY 1980-1983	II-145

TABLE NO.	TITLE	PAGE
6.10.1.1-4	ESTIMATED ANNUAL PEAK POPULATION IN VALDEZ, 1979-1990 WITH ALPETCO PROJECT	II-147
6.10.1.1-5	SUMMARY OF METHOD USED TO DERIVE TABLE 6.10.1.1-2	II-148
6.10.1.2-1	ESTIMATED MAXIMUM STATEWIDE EMPLOYMENT AND POPULATION IMPACTS	II-151
6.10.2-1	ALPETCO CONSTRUCTION LABOR FORCE REQUIREMENTS	II-155
6.10.2-2	ALPETCO OPERATIONS MANPOWER REQUIREMENTS	II-156
6.10.2-3	ESTIMATED RATIO OF FULL-TIME EQUIVALENT WAGE INCOME, AND PERCENT EARNED IN ALASKA, FOR CONSTRUCTION WORKFORCE	II-157
6.10.2-4	ESTIMATED AVERAGE ANNUAL INCOME OF CONSTRUCTION WORKFORCE	II-158
6.10.2-5	QUARTERLY AND ANNUAL AVERAGE ALPETCO LABOR FORCE BY PLACE OF RESIDENCY	II-159
6.10.2-6	ESTIMATED GROSS WAGE PAYMENTS TO CONSTRUCTION WORKFORCE BY PLACE OF PERMANENT RESIDENCE	II-160
6.10.2-7	APPROXIMATE RATES OF FEDERAL AND STATE INCOME TAXATION ON VARIOUS GROSS ANNUAL INCOME LEVELS	II-161
6.10.2-8	DISTRIBUTION OF DISPOSABLE INCOME: PERCENT SPENT IN EACH LOCATION BY PLACE OF RESIDENCE	II-162
6.10.2-9	ESTIMATED FEDERAL AND STATE PERSONAL INCOME TAX REVENUES FROM CONSTRUCTION WORKFORCE	II-163
6.10.2-10	ESTIMATED FEDERAL AND STATE PERSONAL INCOME TAX REVENUES FROM OPERATIONS WORKFORCE	II-164
6.10.2-11	ESTIMATED EXPENDITURES IN ALASKA BY CONSTRUCTION WORKFORCE, 1980-1983	II-165
6.10.2-12	ESTIMATED ANNUAL EXPENDITURES IN ALASKA BY OPERATIONS WORKFORCE (1979 DOLLARS)	II-166
6.10.2-13	ESTIMATED FEDERAL AND STATE CORPORATE INCOME TAXES, 1983-2003	II-167
6.10.2-14	ITEMS PURCHASED ANNUALLY FOR REFINERY OPERATION AND MAINTENANCE	II-168
6.10.4-1	ESTIMATES OF MAXIMUM PROPERTY TAX REVENUE FOR OPERATING PURPOSES, CITY OF VALDEZ, 1984	II-174

TABLE NO.	TITLE	PAGE
6.10.5-1	ESTIMATED STUDENT ENROLLMENT 1979-1990	II-180
6.10.5-2	COMPARISON OF STUDENT ENROLLMENT AND SCHOOL CAPACITY IN PEAK ALPETCO CONSTRUCTION YEAR 1982	II-181
6.10.6.3-1	DEMAND FOR NEW HOUSING 1984-1990	II-197
6.10.7.1-1	TRAFFIC VOLUME SUMMARY - AVERAGE DAILY TRAFFIC	II-201
	ENGLISH - METRIC CONVERSION TABLE	II-225

LIST OF FIGURES

FIGURE NO.	TITLE	PAGE
3.3-1	LAND REQUIREMENTS	II-12
3.3-2	REFINERY FEATURES	II-13
3.3-3	VIEW OF REFINERY FROM THE RICHARDSON HIGHWAY	II-14
3.3-4	TERMINAL DOCK	II-16
3.3-5	VIEW OF TERMINAL FROM SOLOMON GULCH	II-17
5.8.5.1-1	EXISTING AND POTENTIAL RESOURCES DEVELOPMENT	II-74
5.8.5.2-1	SCENIC FEATURES	II-77
5.8.5.3-1	EXISTING AND PROPOSED RECREATION FACILITIES	II-78
5.8.5.4-1	EXISTING LAND USE	II-82
5.8.5.5-1	NEW VALDEZ HOUSING	II-85
5.8.5.6-1	EXISTING AND PROPOSED CITY OWNED LANDS	II-100
5.8.5.6-2	FLOOD HAZARD AREAS	II-104
5.8.5.6.3	EXISTING ZONING	II-108
5.8.7.1-1	SEWER AND WATER SYSTEMS	II-121
6.10.6.2-1	PROJECTED LAND USE IMPACTS	II-186

3.3 LAND REQUIREMENTS AND EXTERNAL APPEARANCE

The proposed petrochemical complex is comprised of facilities at three locations: (1) Refinery and construction camp east of Valdez Glacier Stream, (2) the construction dock and mobilization yard at Old Valdez townsite, and (3) the products terminal dock on the south side of Port Valdez (see Figure 3.3-1). The refinery is served by new primary and service roads and by incoming crude oil and outgoing refined products pipelines. The following discusses the land area requirements and visual exposure and appearance of these facilities.

1. The refinery site. The principal refinery components, including process units, tank farm, support facilities, and construction camp are all located within a 1,425-acre fenced compound north of Corbin Creek - Robe (see Figure 3.3-2). Approximately 30 refining and distillation units, ranging in height from 150 to 250 ft., will be located in the east part of the site. The tank farm contains 39 canister and pressurized sphere-type tanks, each 56 ft. high, ranging in diameter from 65 to 46 ft. Grouped in the western part of the site are such support facilities as the administration building, fire station, medical and change house, warehouses, ballast water tank, water treatment and emergency flare. Finally, a construction camp housing approximately 2,500 employees in approximately 23 prefabricated, two-story dormitory -style buildings, will be located to the north.

   Because trees and low hills surround the site, only one clear, ground-level public view of the refinery will be possible: looking northwest from the vicinity of the Richardson Highway bridge crossing of Valdez Glacier Stream (see Viewpoint on Figure 3.3-1, and View on Figure 3.3-3). The process units and the 350-ft. high emergency flare and most of the tankage will be visible above the trees. The highly reflective process units will be unpainted for heat dissipation, but the tanks will be sandblasted and painted a color which has not yet been determined.

   The entire refinery site will have a controlled perimeter. A nine-foot high flood control dike will be built along its west boundary on Valdez Glacier Stream. Access roads will be controlled and a security fence will surround the installation.

2. Construction dock and mobilization yard. Construction modules and materiel will be unloaded at a new barge mooring slip in the old townsite. A 140 ft. x 150 ft. dock will be constructed at shoreside. The nearby storage/mobilization yard is the former Alyeska Pipeline Service Company pipe storage yard. Prefabricated modules will be unloaded at the docks, trucked to the 110-acre mobilization yard, and then carried over the Valdez Glacier Stream Haul Road (serving as construction access) to the refinery.

3. Products terminal dock. The terminal dock will be located east of Solomon Gulch, approximately five mi. by road from the southern boundary of the refinery site, and two mi. east of the Alyeska marine terminal. The dock will consist of a two-level trestle approximately 2,300 ft. long, serving two tanker-loading platforms, one capable of handling an 80,000-DWT tanker and the other, a 45,000-DWT tanker.(see Figure 3.3-4).

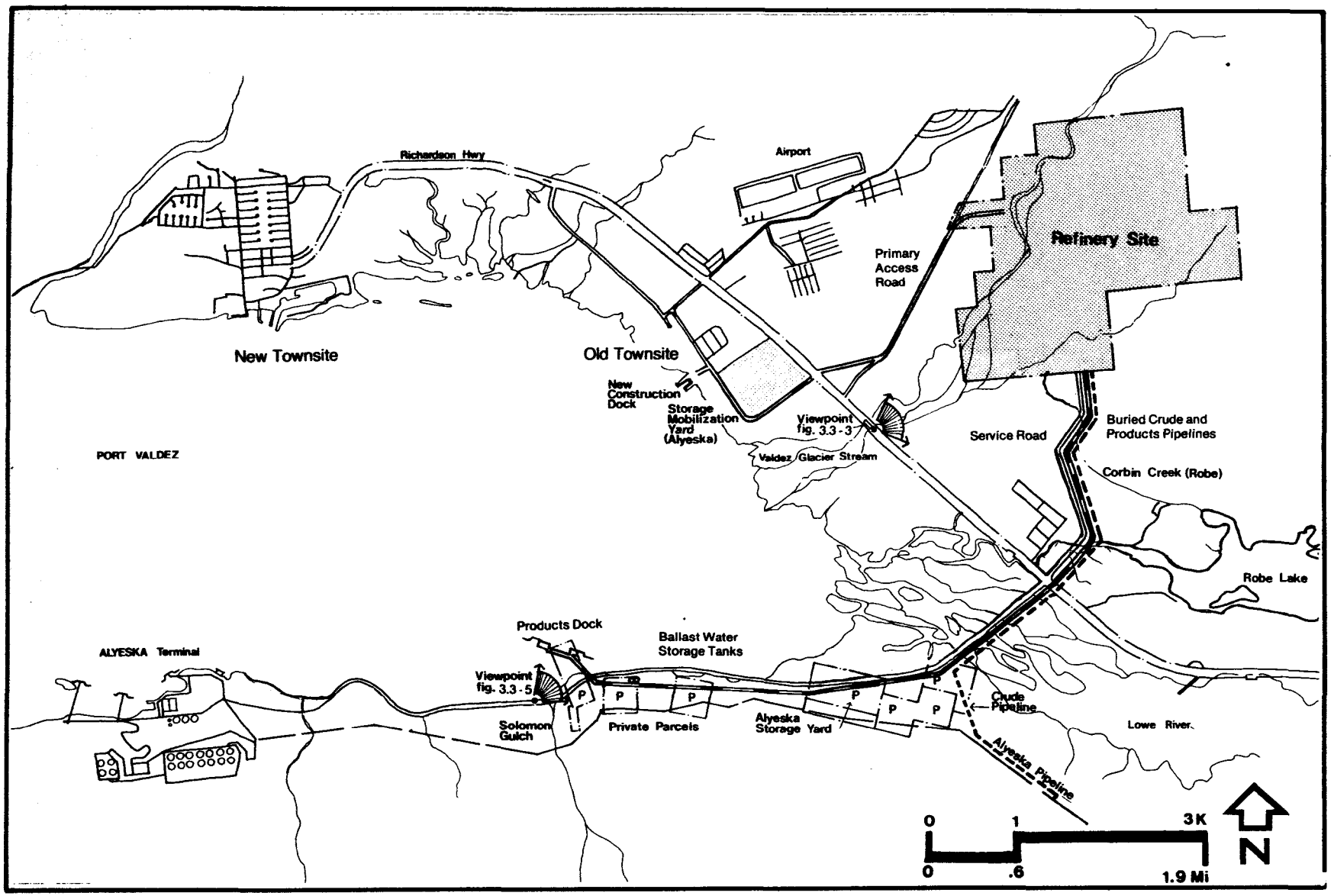

Land Requirements 3.3-1

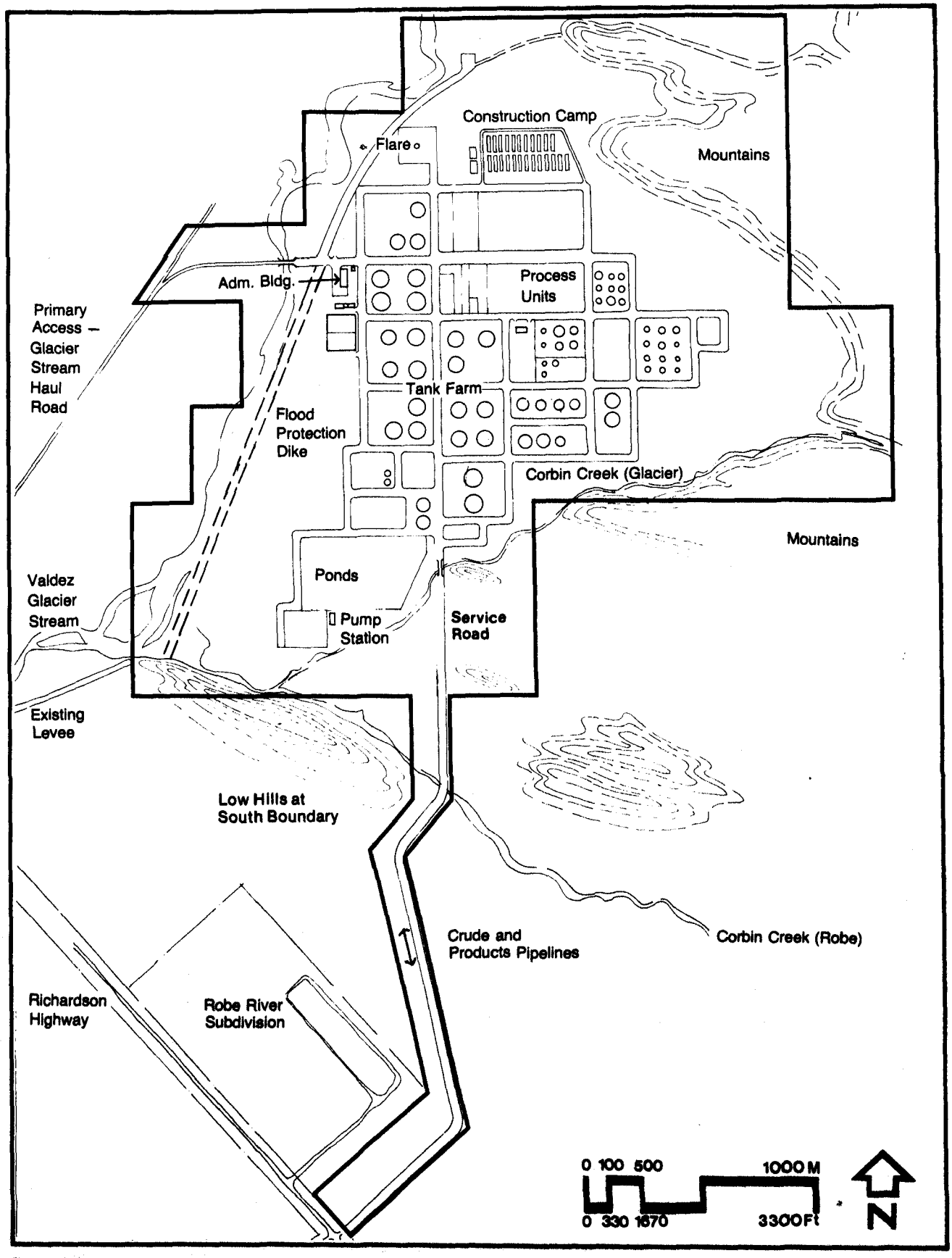

Refinery Features

3.3-2

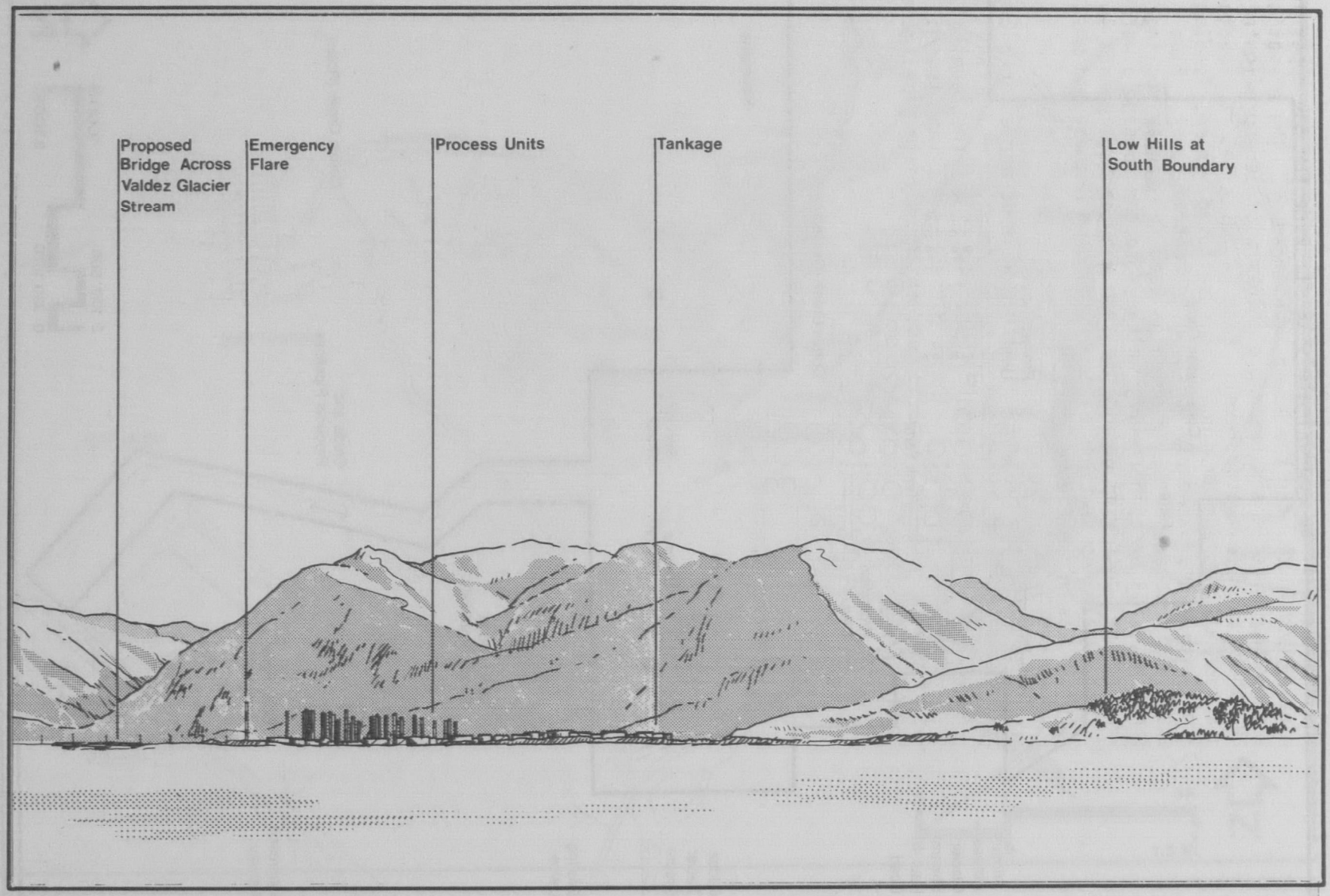

View of Refinery from the Richardson Highway

3.3-3

The trestle will be approximately 18 ft. wide for the upper level pipeway and 40 ft. for the lower level roadway. The elevation of the roadway trestle and loading platform will be approximately 40 ft. above mean low water level. Each 40 ft. x 145 ft. loading platform will have a dock operations building, crane, loading arms, and an approximately 45-ft. high control tower. Five satellite trussed piers, or dolphins used for tanker mooring or berthing, will be connected by walkways to the loading platforms. The terminal dock will be visible from many vantage points in Valdez, including sections of the Richardson Highway and most of Dayville Road (see Figure 3.3-5).

4. Pipelines. The ten products pipelines will be buried in a trench approximately six ft. deep and 36 to 66 ft. wide running between Corbin Creek (Robe) and the terminal dock. The crude line will also be buried in the same trench, except for the elevated segment between the Alyeska pipeline and Dayville Road (see Figure 3.3-1).

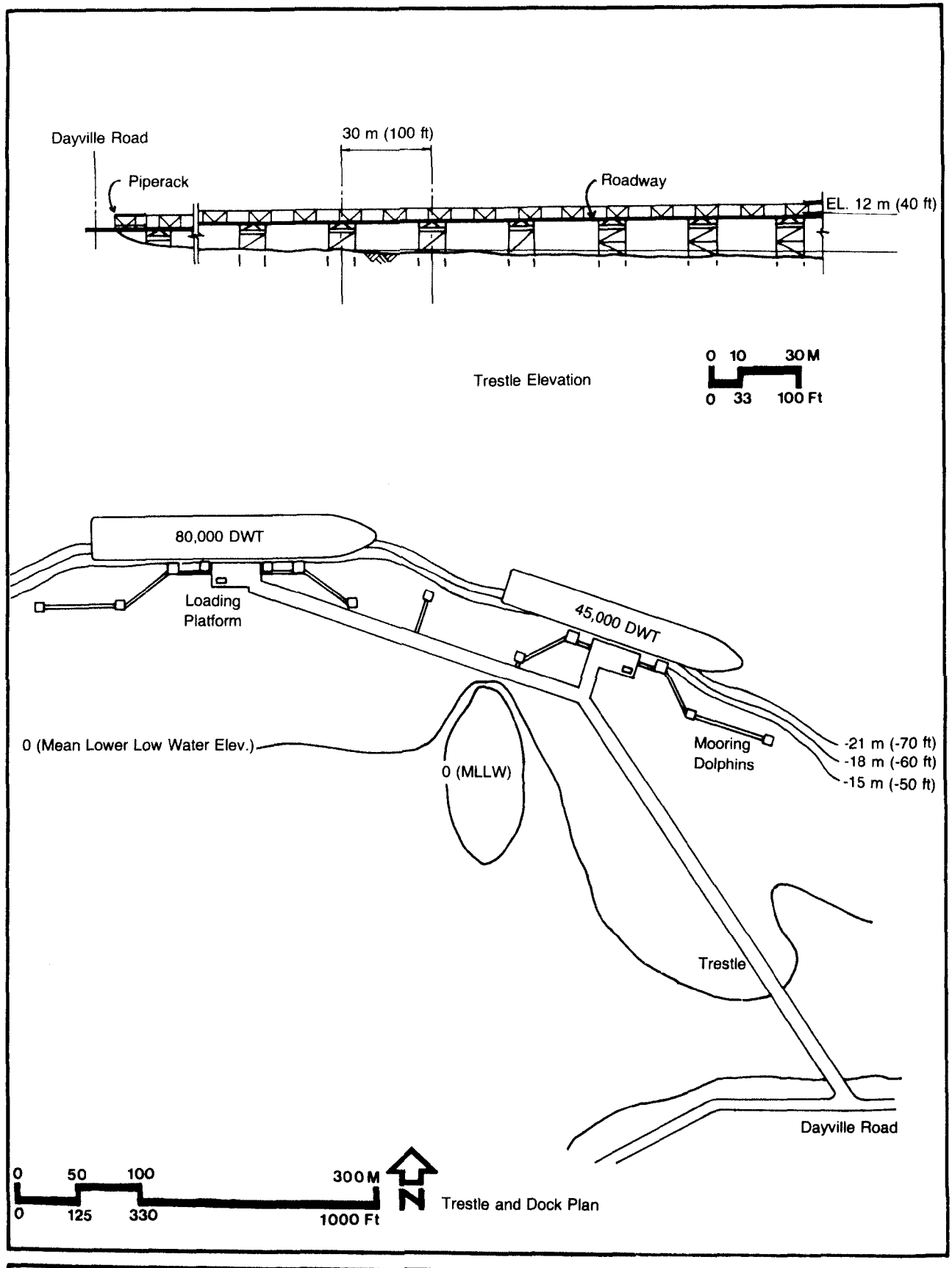

Terminal Dock 3.3-4

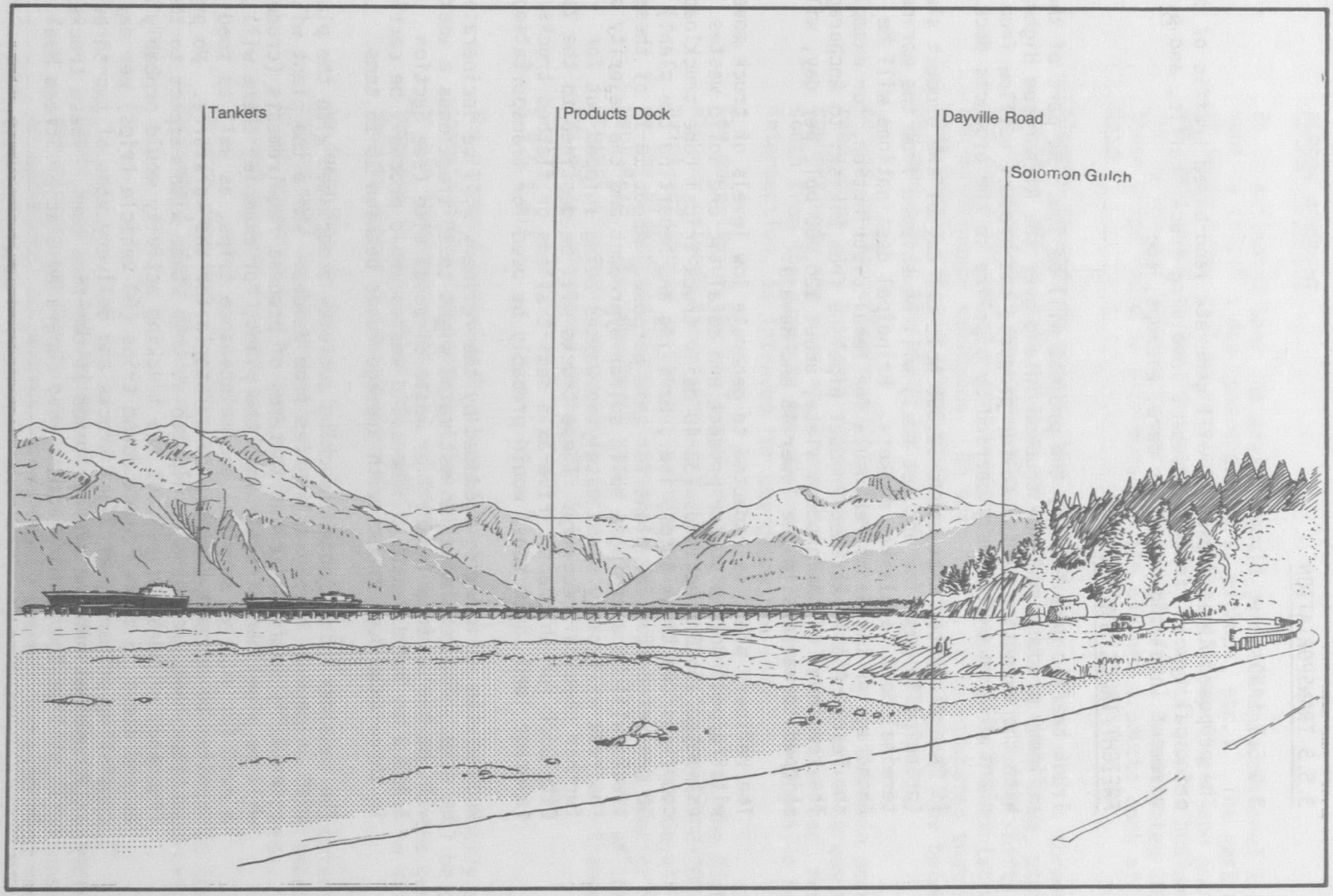

View of Products Dock Looking East

3.3-5

3.5.5 TRANSPORTATION

3.5.5.1 LAND

The proposed Alpetco project will generate land-based traffic of two principal types: freight movement involving truck traffic, and person movement involving passenger cars, pickups, etc.

FREIGHT/TRUCK TRAFFIC

Truck traffic generated by the project will be low. No part of the refinery products will be trucked inland over the Richardson Highway. With the exception of the sulfur product, the product outflow from the plant will be exclusively carried by pipeline to the products dock.

It is anticipated that about 30,000 bbl. per day of the product slate (principally gasoline and jet fuel) will be shipped from the marine terminal dock to Alaskan markets. Principal destinations will be Anchorage or the Kenai Peninsula for local distribution, for example by the Tesoro-Alaska Refined Product pipeline from Nikiski to Anchorage. The remainder of the product slate, about 120,000 bbl. per day, will be shipped to markets in the lower 48 and Hawaii.

The refinery plant is expected to generate low levels of truck movement with respect to the sulfur product and catalytic and solid wastes. An estimated 15-20 truckloads (30-40 daily truck trips) (one truckload comprises two truck trips, i.e., arriving and departing the plant) will be generated from the plant for this purpose. About 10-15 of these trucks will be carrying a solid sulfur byproduct and the majority of the rest will carry spent catalytic wastes being shipped out for further chemical recovery. These trucks will be destined to the Valdez City Dock for shipment. Five-axle semi-trailers or flatbed trucks (average load 15-20 tons) would probably be used for transportation.

Much of the solid waste produced by the refinery will be incinerated on site. The remainder, an estimated eight to 10 truckloads a week, will be hauled to a landfill or waste disposal site (see Section 3.4.3.2 on Solid Wastes). The solid wastes would probably be carried in three-axle dump trucks with average loads between 10-15 tons.

The remainer of projected trucking activity associated with the plant will be general supply deliveries from Valdez. While the plant will be essentially self-sufficient in terms of process requirements (crude oil will be pipelined directly into the plant, for example) there will be a need for supply, service, and maintenance trips, as well as food supplies to support the on-site cafeteria for the workforce. No projections have been made by Alpetco at this stage with respect to the frequency of these trips, but the trucking activity would probably not exceed about 25 Valdez-plant round trips (50 vehicle trips) per day, consisting primarily of light trucks and delivery vans of two-three axle combinations and average loads of two-five tons. These trucks will utilize the primary access road (upgraded Glacier Stream Haul Road).

PERSON MOVEMENT

It is estimated that the project would generate an additional 1,250-1,300 vehicle trips* a day (passenger cars, pickups, etc.). The vast majority of these trips will be attributed to the refinery itself and include employee trips to and from work, as well as miscellaneous business trips during the day between Valdez and the refinery. An estimated 100-200 of these trips would be attributed to the planned products dock off Dayville Road.

Alpetco intends to operate the plant 24 hours a day with a three-shift system. While shift details are not available at this time, staffing is anticipated to be spread almost equally over the three shifts with the day shift being slightly higher due to managerial, administrative and maintenance employees. On this basis, it is estimated that the peak hourly vehicle trips generated by the refinery will be between 350 and 400 at the start and end of the day shift.

Access to the refinery will be limited primarily to the main access road which will be constructed across the Valdez Glacier Stream to connect with the Glacier Stream Haul Road. The service road, running south from the plant to the Richardson Highway at the Dayville Road intersection, is intended for emergency use only.

The majority of the projected vehicle trips will utilize the Richardson Highway between the plant and Valdez. Additionally, the 100-200 daily trips attributed to the marine terminal dock will utilize Dayville Road, on the Richardson Highway between Dayville Road and the Glacier Stream Haul Road. The impacts of these and the secondary impacts of the Alpetco project (secondary population increases, etc.) on the land transportation system are discussed in Section 6.10.7.1.

3.5.5.2 AIR

The proposed refinery is planned by Alpetco to be operationally self-contained and independent. The additional demands that will be placed on air transportation will, therefore, be related more to the general increase in population and activity levels that will occur in Valdez, than to specific demands from the refinery itself.

As described in Section 3.5.5.1, plant product outflow and material inflow will be exclusively marine and pipeline based. This aspect of plant operations will thus not lead to any significant increase in demand for air freight services.

Alpetco does not plan for any central management functions at the plant. Management staff at the plant will thus be purely operations-oriented.

*Based on projected Alpetco workforce of 580; assumes 2.2 vehicle trips per person per day and average vehicle occupancy of 1.1 persons. Assumes an additional 10 percent for movements between the plant and the marine terminal dock.

It may be expected, though, that there will be a small increase in air passenger trips to/from Valdez through business trips between the Valdez plant and the oil community in both Anchorage and the lower 48.

These additional trips will involve both Alpetco and non-Alpetco personnel. It is anticipated that these trips will comprise Alpetco management or specialist staff, traveling between the plant and the Anchorage- and Texas-based Alpetco operations. General business trips by personnel from other companies would also be included in this category. It is estimated that in total, this activity would result in a maximum of about 40 passenger trips (20 round trips) per week (about 2,000 passenger trips per year).

The Alpetco facility may be expected to generate a low demand for ancillary services and spare parts deliveries to be made by air. Urgent small parts delivery, however, may be made by air freight, either by scheduled air service or by air charter. Such deliveries would probably not occur on a regular basis, but rather would be sporadic. Major and bulk items will arrive by either ship or road from Anchorage.

Potentially, the substantive element of increased air transportation demand will be related to the increased population base in Valdez that will result from the Alpetco plant operations workforce. This would include any nonwork-based trips made by Alpetco staff and their families. These trips would be destined principally to Anchorage, and would be for shopping or recreational purposes.

Any nonwork and recreational trips to the Anchorage area will have a tendency to go by air due to the greater convenience (one-hour journey time compared to a 15-hour ferry/car trip, or a seven/eight-hour car trip via the Richardson Highway). This tendency will be greater for the Alpetco-based population in Valdez as the Marine Highway system via Whittier is projected (Prince William Sound Regional Transportation Study (unpublished Draft), State of Alaska, Department of Transportation and Public Facilities, 1978) to reach capacity in the early 1980's.

Overall, it is estimated that the increase in demand for air transportation as a direct result of the Alpetco facility may be about 5,000 passenger trips per year. Based on the current seasonal variations in air traffic, this would result in an average increase of about 25 passenger trips per day into and out of Valdez during the summer period, and an increase of about 10 passenger trips per day during winter.

The projected impacts on the air transportation facilities in the region are discussed in Section 6.10.7.2, along with the additional impacts on the air transportation system that may be expected from the secondary and residual population increases in the Valdez area.

3.5.5.3 MARINE

Alpetco plans to construct a remote marine terminal dock east of Solomon Gulch off Dayville Road. With the exception of the sulfur solids, all refinery products will be pipelined down to the marine terminal dock and loaded directly onto ships.

The facilities at the marine terminal dock will be exclusively for liquid products. As there will be no facilities for the handling of regular cargo (e.g., roll-on/roll-off, lift-on/lift-off facilities, etc.), there will be no trucking activity generated by the marine terminal dock on a regular basis. The trucking activity previously identified from the refinery (with respect to nonpipeline material) will be destined to the City Dock on the north shore of Port Valdez.

Anticipated personnel movement between the marine terminal dock and the refinery plant is described in Sections 3.5.5.1 and 6.10.7.1.

3.6 LABOR FORCE

3.6.1 CONSTRUCTION LABOR FORCE

Table 3.6.1-1 shows project construction labor force requirements A peak of 2,280 people will occur in October of the third year of construction.

Table 3.6.1-2 shows the main craft skills and the approximate peak requirement of people in each.

3.6.2 OPERATION WORKFORCE

Table 3.6.2-1 shows the estimated plant operations labor force requirement. There will be steady employment for 579 people according to this estimate.

Table 3.6.2-2 shows the major classifications for the submanagement level operations work force and the approximate number of people required in each category.

TABLE 3.6.1-1

Alpetco Construction Manpower Requirements

Year	Month	No. of People	
1980	June	15	
	July	150	
	August	200	
	September	220	
	October	250	
	November	200	
	December	200	
1981	January	200	
	February	200	
	March	200	
	April	206	
	May	214	
	June	382	
	July	483	
	August	622	
	September	804	
	October	987	
	November	1,137	
	December	1,256	
1982	January	1,394	
	February	1,534	
	March	1,781	
	April	2,016	
	May	2,263	
	June	2,446	
	July	2,638	
	August	2,767	
	September	2,799	
	October	2,820	
	November	2,693	
	December	2,606	
1983	January	2,457	
	February	2,306	
	March	2,006	
	April	1,587	
	May	1,158	
	June	837	
	July	579	
	August	408	
	September	193	
	October	107	
	November	64	
	December	0	
		47,385	Man-months of on-site labor
		3,349	Man-years

Source: Brown & Root.

TABLE 3.6.1-2

Trade Skill Requirements, Alpetco Construction

Trade	Approximate Peak Requirement
Boiler Makers	100
Carpenters	200
Cement Finishers	50
Electricians	500
Iron Workers	400
Laborers	300
Millwrights	100
Pipe Fitters	800
Riggers	75
Operators	200
Truck Drivers	50
Painters	100
Insulators	200

Source: Brown & Root

TABLE 3.6.2-1

Alpetco Operations Manpower Requirements

Employment Category	Number of Employees
Plant Operations	231
Maintenance	291
Administration	57
TOTAL	579

Source: Brown and Root.

TABLE 3.6.2-2

Major Job Classifications for Alpetco Operations
Work Force, Submanagerial Level

Classification	Approximate Number Required
Process Engineers	6
Mechanical Engineers	4
Lab Technicians	21
Purchasing Agents	4
Materials Control Personnel	4
Warehousemen	9
Accountants	12
Employee Relations Personnel	7
Office Services Personnel	9
Firemen	12
Safety and Security	12
Process Operators	162
Process Supervisors	16
Mechanics and Machinists	98
Equipment Operators	17
Electricians	34
Laborers	27
Tool Room Attendants	3
Clerks	8

Source: Brown & Root

4.1 ALTERNATIVES TO REFINERY CONSTRUCTION IN ALASKA

4.1.1 INTRODUCTION

Environmental impact statements prepared under Section 102 of the National Environmental Policy Act of 1970 must include a discussion of "alternatives to the proposed action," which is meant to include "the alternative ways of accomplishing the objectives of the proposed action and the results of not accomplishing the proposed action." (Section 102 c(iii) of NEPA, and a statement of legislative intent by the Senate Interior Committee, 115 Cong. Rec. 40420, December 20, 1969.)

This section discusses three alternatives: not authorizing the proposed project; the possibility of building the plant outside Alaska; and the possibility of regulatory measures that would obviate the need for the project.* The conclusions are that the project would increase the supply of gasoline on the West Coast and generally help to reorganize the West Coast petroleum market, and these benefits would be lost if Federal permits were denied; that location of the proposed refinery on the West Coast outside Alaska may involve net economic advantages over an Alaskan site, but the question is moot because the terms of the sale of Alaska's royalty oil require the purchaser, Alpetco, to build a processing plant in the State; and that regulatory action by the Federal Government to increase the supply of gasoline or decrease demand for gasoline, and thereby obviate the need for the project, is not a realistic alternative to the proposed plan because it is uncertain whether and when this regulatory action could be implemented.

4.1.2 NO PROJECT

Denial of Alpetco's NPDES permit application would prevent construction of the proposed refinery. Local environmental impacts of plant construction and operation, including economic benefits to the State and local economy, are fully discussed in this report. These environmental impacts would not occur if the project were cancelled for want of Federal permits. In addition to these environmental considerations, cancellation of the project would have other, nonlocal consequences as well, because the project contributes to the general economic efficiency of the West Coast petroleum fuel market.

This section discusses the effects of the project on the West Coast energy market so that all consequences of the no-project alternative can be identified. The West Coast petroleum supply and demand situation is extremely complex, and a full explanation of every facet of it is well beyond the scope of this report. For purposes of the present discussion, however, it is necessary to describe in general terms the pertinent features of the West Coast petroleum market.

*It should be noted that the refinery is not a project or program initiated by the Federal Government, such as a dam, highway or an offer to lease Federal mineral land, nor is it part of a broad, coordinated Federal plan designed to deal with a large problem. The main objectives of the proposed project are private: the refinery is a business investment by the applicant, Alpetco.

These features include shortages in the supply of gasoline, particularly unleaded gasoline; supplies of Alaskan North Slope (ANS) crude oil which exceed the capacity of West Coast refiners to process this oil; a surplus of high sulfur residual oil; and continued imports of sweet (low sulfur) Indonesian crude oil.

The West Coast petroleum market is characterized by a mismatch between refining capabilities and the availability of domestic crudes. Alaska North Slope (ANS) crude is sour, which means it has a high sulfur content (approximately 1 percent by weight) and it is relatively heavy (specific gravity of API 27°) which means it has comparatively fewer of the light fractions which produce gasoline. California crude is the only other domestic crude produced in the district, and it is even heavier and more sour. In contrast, Indonesian crudes are sweet (less than 0.1 percent sulfur) and light (API 35° or higher). Under normal refining, a barrel of heavy ANS crude yields less gasoline and more residual fuel oil than does most light crude; and there is a relatively high demand for gasoline on the West Coast and relatively low demand for residual fuel oil. Furthermore, without expensive desulfurization, ANS crude produces a residual fuel oil that is too high in sulfur content (1.5 to 1.7 percent) to meet California air pollution regulations, which require that fuel oil may not exceed 0.25 percent in Southern California and 1.0 percent in Northern California. Indonesian crude, on the other hand, produces residual fuel oil that is within these limits. Thus, refiners have preferred sweet, light crude to sour, heavy crude to best match their slate of products with market demands.

As a consequence, West Coast refineries, especially the smaller refineries, are not equipped to handle large volumes of high sulfur crude which requires more expensive and elaborate equipment. Refinery runs of sour crude require first, that critical process units, such as distillization towers and catalytic reactor vessels be fabricated with special alloy steel to resist the corrosive effect of sulfur at high temperature and pressure. Second, in order to produce low sulfur fuel oil from sour crudes, a refinery must have a sulfur recovery system. Third, to obtain the maximum gasoline production from heavier crudes, a refinery must have downstream processing units, such as catalytic crackers and cokers that break the heavy fractions into lighter products. Therefore, to handle larger proportions of heavy, sour crude in their existing mix of crude feedstocks, most West Coast refineries would have to undergo modification. Modification of this type is commonly referred to as "retrofitting" or making a "sour crude revamp."

Because Indonesian sweet crude yields a slate of products that is better suited to the local market than does ANS crude, imports have continued even though abundant ANS is available. Prudhoe Bay oil has displaced most sour crude imports on the West Coast since it entered the market in 1977. Nevertheless, some 500 thousand barrels per day (MBD) of foreign oil, primarily Indonesian sweet crude, has continued to be imported to the West Coast (U.S. Department of the Interior, 1979; and U.S. Department of Energy, 1979).

ANS crude that is not refined on the West Coast is shipped via the Panama Canal to refineries on the Gulf Coast. North Slope production is now about 1,200 MBD, and about 840 MBD of this oil is refined on the West Coast. Thus, some 360 MBD are shipped through the canal. North Slope producers plan to increase their production to 1,500 MBD by the end of 1979, so even more ANS crude will soon be surplus to current West Coast refining capacity.

The Jones Act requires U.S.-built ships to be used in trade between United States ports, so ANS crude must travel in comparatively costly American bottoms, and it must be off-loaded for trans-shipment through the Panama Canal because the large, efficient crude carriers that transport the oil from Valdez, Alaska are too big to transit the canal. As a result, the shipment of ANS crude from Valdez to Gulf ports makes it "by far the most expensive tanker transportation in the world" (Martingale, Inc., 1978). Transportation charges for ANS crude beyond West Coast ports are in the neighborhood of $1.80 per barrel (Martingale, Inc., 1978). This cost is subtracted from the value of the oil at the well head, reducing producer profits and royalty income to the State of Alaska.

An objective of Federal, State of California, and State of Alaska policy is to reorganize the West Coast petroleum market by increasing gasoline production, increasing the amount of sour crude refinery capacity, increasing West Coast processing of ANS and California crude, and reducing imports of foreign sweet oil.

In general, existing West Coast refiners are proceeding slowly with expansions and modifications necessary to accomplish these objectives. There are several reasons for the slow response by refiners to imbalances in the West Coast market:

a. The spread between the cost of sweet imported crude and ANS crude is not great enough to justify major investment in sulfur recovery and cracking capacity, particularly in cases where existing equipment is not fully depreciated; and even if the current price spread is attractive to some refiners, it is expected to shrink as a result of construction of an east-to-west ANS crude oil pipeline (U.S. Department of Energy, March 1979; A.D. Little Inc., 1978);

b. Major investment is required immediately by refiners to increase the octane rating of their gasoline production, primarily through additions to catalytic reforming and isomerization capacity (Oil and Gas Journal, June 4, 1979, April 9, 1979);

c. Refiners are hesitant to invest in new refineries or major throughput expansions of existing plants because of the expectation that demand for gasoline will decline, or because the rate of increase of demand will slow dramatically in the 1980's (Wall Street Journal, October 10, 1978; National Petroleum News, May 1979); and because of apprehension over the availability of cheaper foreign imports when U.S. price controls on domestic crude oil are phased out (Oil and Gas Journal, March 12, 1979);

d. The permitting process for new refineries and for modifications to existing refineries, involving local, regional, State and Federal agencies, includes substantial expense, potential for protracted administrative proceedings and litigation, and a high risk of eventual denial.*

The Alpetco refinery, which is designed to maximize the yield of light products from ANS crude, will help reorganize the West Coast petroleum market. It will increase the supply of gasoline by approximately 75 MBD (this will eliminate the need for gasoline imports into the region); it will increase by 150 MBD the volume of ANS that is refined on the West Coast; and it will spare 150 MBD freight charges through the Panama Canal (at $1.80 per barrel, this amounts to a total annual savings of $98.5 million to North Slope producers and the State of Alaska).

It is not clear that the Alpetco project will have any substantial direct or indirect effects on the West Coast imports of sweet crudes.

While denial of Federal permits will prevent construction of the Alpetco refinery and thereby prevent adverse local environmental impacts, it will also result in loss of the foregoing benefits of the project to the West Coast energy market.

4.1.3 LOCATE REFINERY ON THE WEST COAST OUTSIDE ALASKA

A refinery located on the West Coast outside Alaska would make the same contribution to reorganizing the petroleum market as would an

*Most major West Coast refineries are located in EPA nonattainment areas, so refinery expansions or desulfurization projects require air emission "offsets" from within the region. The permitting process is considered by the industry to be a major stumbling block to new energy projects, including refinery construction and expansion (Oil and Gas Journal, February 6, 1979 and March 12, 1979). President Carter recognized the problem in his proposal for an Energy Mobilization Board (EMB) which could function to expedite the permitting process for essential nonnuclear energy projects.

**Refinery construction costs would be significantly lower outside Alaska. Based on a factor of 1.0 for the Gulf Coast, construction costs are estimated to be approximately 1.5 for Alaska, and 1.1 for the West Coast (these are estimates by Alpetco based on cost information prepared by Brown and Root; they are also independent estimates of Battelle Pacific Northwest Laboratories in an unpublished 1978 study for the Alaskan Legislative Affairs Agency). Thus, a $1.2 million plant in Alaska would cost $880 million in California. Operating costs, including labor and supplies, would also be cheaper outside Alaska. It is not clear, however, if these economic advantages would translate into lower product prices to consumers (or alternatively, that the higher cost Alaska location means significant higher product prices to consumers). Preliminary estimates by Alpetco are that an internal rate of return of 15 percent requires a price differential of only 0.6 percent on the plant's gasoline pool to offset the 50 percent higher capital construction costs associated with the Alaska site (operating costs were not considered) (personal communication, Leonard Boyd, Economist, Alpetco, September 14, 1979).

Alaska refinery, and it would be more economical itself since construction and operation costs would be lower.** However, a non-Alaska location for this refinery is not a realistic alternative because the State of Alaska has made an explicit condition of its sale of royalty oil that a refinery be constructed in the State of Alaska. Indeed, the main public policy objective of the State in taking its royalty in kind rather than in value is to create economic development in the State through local refining and petrochemical manufacture.

4.1.4 REGULATORY MEASURES THAT WOULD ELIMINATE NEED FOR THE PROJECT

Regulatory measures could be taken by the Federal Government which would reduce overall gasoline demand and/or increase fuel production from existing refineries, thereby obviating need for the proposed project. Administrative agencies acting under existing statutory authority could implement some measures that would have marginal impact on supply and demand. For example, the Environmental Protection Agency could delay its scheduled phase-down of lead additives in gasoline. However, major actions would require new congressional authorization. For example, Congress could offer attractive financial incentives for installation of sulfur recovery equipment on existing refineries; accelerate new car mileage performance standards; or impose gasoline rationing.

While regulatory measures of this type are potentially effective means of manipulating both supply and demand of petroleum fuel, the possibility of any such measures being implemented as even a partial alternative to the proposed refinery is so remote and speculative that none warrant consideration here. Existing Federal regulations affecting fuel consumption and production in the United States have long, complicated procedural histories and significant changes in them could not be made without extensive study and public debate. These regulations are key elements of Federal energy policy, and changes in them could affect many public and private interest groups. Thus, the outcome of an effort to change regulatory policy by Congressional action would be so uncertain, both in terms of the time when they would be implemented and the ultimate form they might take, that this avenue is not a realistic and practical alternative to accomplishing the desirable policy objective of the project.

4.4.8 ALTERNATE TRANSPORTATION ACCESS ROUTES RELATIVE TO THE SITE

Alternative access route configurations to the proposed project site are limited by Robe Lake, the Robe River Subdivision, and the Valdez Glacier Stream. Three potential alternates have been identified and are described below.

1. REVERSE ROLES OF PROPOSED PRIMARY AND SERVICE ROADS

This alternate would have a number of disadvantages: potential impact of daily traffic using the service road on wildlife in the Robe Lake area. The southern access, off of the Richardson Highway at the Dayville Road, would have to pass through much of the refinery work area before reaching the administrative/visitor area. (The proposed main access from Glacier Stream Haul Road would enter the plant directly into the administration/visitor area.) This alternate would mean increased traffic impact on the Richardson Highway for an additional 2.1 miles beyond the Glacier Stream Haul Road, and an additional 2.9 miles on the trip length from Valdez to the refinery administration buildings.

The alternate, however, would provide a more direct access between the refinery and the marine terminal dock (1.3 miles less travel distance than the proposed scheme), and would avoid use of the Richardson Highway for these trips.

2. EXTENSION OF EXISTING LEVEE ROAD INTO PROPOSED SITE AS ALTERNATE PRIMARY OR SERVICE ACCESS

   This alternate would utilize the alignment of the gravel road along the existing levee on the south side of the Valdez Glacier Stream, with an extension into the southwest corner of the site. The alternate would not present any intrinsic advantages over the proposed site access plans, for the following reasons: it is about 0.5 miles east on the Richardson Highway of the Glacier Stream Haul Road. Use of this alternate as the primary access would, therefore, involve slightly longer travel distance and impacts over more of the Richardson Highway. This alternate would also have to pass through much of the refinery site to reach the administrative area, thus presenting potential security problems. If the route were used as an alternate to service access, then the product pipelines would probably follow a similar alignment. This alignment between the refinery and the marine terminal dock would be about 0.8 miles longer than the alignment adjacent to the proposed service road.

3. USE OF VALDEZ AIRPORT ROAD AS ALTERNATE PRIMARY ACCESS

This alternate would utilize the existing Valdez Airport Road with the construction of an extension from just beyond the airport, across Valdez Glacier Stream, to the northwest corner of the refinery site. This would be advantageous in that new road construction would be reduced.

The disadvantages of this alternate are:

- the route is not as direct as the proposed route
- it would lead to severe construction-related impacts on both the Airport Road and the Mineral Creek Loop Road, if used for the primary construction access
- Severe conflicts would arise between construction traffic and airport-related traffic

It should also be noted that none of the alternates would offer the combined advantages of utilizing the Glacier Stream Haul Road as the primary construction road, these being principally:

- direct access to the proposed staging area for module movement
- exclusive use of road for construction traffic
- minimal interference with the Richardson Highway.

5.8 SOCIOECONOMICS

This section describes baseline conditions dealing with population and employment, public sector revenue and taxation, public services, land use and housing, transportation and utilities. Subjects are discussed at the state, regional and local levels, as appropriate to the probability of impact.

The planning horizon adopted for the study is 1979-1990, a period within which trends can be extrapolated with some degree of confidence. During this time frame, the Alpetco project will have been built and in operation for a period of six years, and nearly all requirements to serve the new population with housing and public services will have been met.

5.8.1 POPULATION CHARACTERISTICS

In the past decade the population of Valdez has fluctuated dramatically. From a town of fewer than 1,000 people in 1969, Valdez grew to a boom town of some 8,000 in mid-1976. Construction of the Alyeska Terminal was complete by mid-1977, and since then Valdez has slowly stabilized at around half its 1976 peak. The growth of the 1970's has transformed the demographic profile of the pre-pipeline community. As a consequence, U.S. census information on socioeconomic characteristics of the town, which date from 1970, are useless.

In March, 1978, a group from the University of Alaska, Anchorage, headed by sociologist Dr. Michael Baring-Gould, conducted a census of Valdez under contract to the City. The project involved enumeration of the City's entire resident population rather than extrapolation from sample data. Because the City disputed the findings, the census has never been officially released. Nonetheless, the data and method seem unimpugnable, and much of the demographic information and analysis used in this report is derived from this 1978 census.

The 1978 census reported a population of 3,349, including 106 residents of Harborview Developmental Center (This is only slightly less than the town, or noncamp, population of 3,510 that Baring-Gould reported in a comprehensive survey of Valdez in 1975.). This number is disputed by the City, but it seems to be confirmed by population estimates based on the number of currently occupied dwellings, the size of the local workforce, school enrollment, and residential electric connections. These estimates are shown in Table 5.8.1-9 and are discussed below. For purposes of analysis in this report, 3,350 will be considered the population base of Valdez.

The population of the City of Valdez is currently recognized by the Alaska Department of Community and Regional Affairs to be 4,481. This figure is an estimate by the city administration based on a count of dwelling units (1,469 units multiplied by an average of 3.05 people per unit). The population of Valdez, like many other places in Alaska, is higher in summer than in winter. While summer population of the town might approach 4,500, the number of permanent year-round residents is fewer.

Table 5.8.1-1 shows the population of Valdez and the State of Alaska at 20-year intervals between 1900 and 1940, and 10-year intervals from 1940 to 1970. Between 1900 and 1960 the population of Valdez changed very little (351 in 1900 to 555 60 years later), while Alaska as a whole grew by two and a half times (from 63,592 to 226,167). Between 1960 and 1970, however, the rate of growth of Valdez was greater than that of Alaska (81.1 percent in contrast to 33.8 percent). A promotional publication by the Alaska Department of Economic Development issued in early 1969 estimated the city population to be 800 (school enrollment was 224, or 28.0 percent of the population). The publication did not mention the trans-Alaska pipeline, and it identified mining as the most likely new industry.

In 1978, census takers found that males comprised 54.5 percent of the total population, and females 45.5 percent. The census revealed that the population is predominantly working age. Table 5.8.1-2 shows the age structure of the community. There are relatively few residents of retirement age, and the proportion of school-age children (ages 5 to 17) seems to be lower than the statewide average (see Table 5.8.1-3). Table 5.8.1-4 shows Valdez school enrollment between 1967 and 1977.

Table 5.8.1-5 shows the ethnic composition of the Valdez resident population. Valdez is not the site of an historic Native village, and the Native element of the population does not constitute an identifiable subculture within Valdez.

Housing is discussed in more detail in Section 5.8.5.5. However, Tables 5.8.1-6 through 5.8.1-8 suggest the residential patterns of the local population. The discrepancy between the numbers of occupied dwellings as observed in 1979 (970) and in 1978 (1,071) may be attributable to errors by the surveyors or to a decline in population between the dates of the surveys, or both.

Table 5.8.1-9 shows population estimates derived from various sources. Laborforce information in this table is discussed below in Section 5.8.2. These estimates generally support the finding of the 1978 University census that Valdez has a permanent residential population of about 3,350 people.

Population projections are very difficult to make for Valdez because of the uncertainty of future economic development activity in Valdez and Alaska. For half a century the population of Valdez was very stable (from 1920 to 1960 the town grew by fewer than 100 people). Without North Slope oil development in the 1970, Valdez would probably have continued its traditional modest pace of growth.

For purposes of this analysis, we have assumed that the population of Valdez will grow from its 1979 base of 3,350 at 3 percent per year. Incremental population created by the Alpetco project is added to this annually increasing base. Three percent is the growth rate used by the Valdez school system for its planning purposes, and it is a middle-range growth projection for the state population (these vary between about 1.5 percent for no major economic developments and about 5 percent with major development).

TABLE 5.8.1-1

Population of Valdez and Alaska, 1900-1970
(% Change From Preceding Census)

	1900		1920		1940		1950		1960		1970	
Place	Number	% Change	Number	% Change	Number	% Change	Number	% Change	Number	% Change	Number	% Change
Valdez	351	-	466	32.8	529	13.5	554	4.7	555	0.2	1,005	(81.1)
Alaska	63,592	-	55,036	13.5	72,524	31.8	128,643	77.4	226,167	75.8	302,647	(33.8)

U.S. Census figures

Source: Peter C. Lin, "Alaska's Population and School Enrollments," University of Alaska, ISEGR, December, 1971, p. 4,9.

TABLE 5.8.1-2

1978 Population of Valdez by Age,
University of Alaska Census

Age	Number	% of Total
0-4	277	8.3
5-9	309	9.2
10-14	306	9.1
15-19	310	9.3
20-24	405	12.1
25-29	415	12.4
30-34	358	10.7
35-39	289	8.6
40-44	193	5.8
45-49	173	5.2
50-54	145	4.3
55-59	91	2.7
60-64	40	1.2
65-69	14	0.4
70-74	9	0.3
75 and older	5	0.1
age unobtained	10	0.3
TOTAL	3,349(1)	100

Source: Baring-Gould et al, Valdez City Census, University of Alaska, Anchorage, March, 1978.

(1) Includes 106 residents of Harborview Developmental Center.

TABLE 5.8.1-3

School-Age* Children in Population (percent of total) in Alaska, Anchorage, Valdez Census District, and City of Valdez

	1960	1970	1978
Alaska	24.2(1)	29.2(1)	26.4(2)
Anchorage(1)	22.5(1)	29.0(1)	25.0(3)
Valdez Census District(1)	23.8	27.7	N.A.
City of Valdez	N.A.	28.0(4)	22.0(5)

*Between 5 and 17 years old.

(1) Source: Peter C. Lin, "Alaska's Population and School Enrollments," University of Alaska, ISEGR, Dec. 1971.

(2) Source: National Education Association, "Rankings of the States, 1979."

(3) Source: 1978 Population Profile Municipality of Anchorage, Anchorage Municipal Planning Department, 1978.

(4) Source: U.S. Census population for Valdez in 1970 (1,005); school enrollment 281 (Table 5.8.1-4).

(5) Source: Table 5.8.1-2 (ages 15-19 allocated 62 per age group)

TABLE 5.8.1-4

Enrollment in Valdez Public Schools, 1967-1978

Grade	Sept. '67	Sept. '68	Sept. '69	Sept. '70	Sept. '71	Sept. '72	Sept. '73	Sept. '74	Sept. '75	Sept. '76	Sept. '77	Sept. '78
K	22	12	17	21	18	18	16	41	71	79	52	58
1	13	16	15	23	26	19	14	27	54	99	69	59
2	14	18	22	17	23	19	23	20	50	63	81	68
3	19	13	21	25	18	20	20	39	56	49	57	69
4	20	14	16	29	21	23	20	37	67	73	47	66
5	16	14	14	17	25	23	22	34	72	76	61	48
6	15	17	16	22	21	23	25	33	57	83	56	56
7	16	19	26	21	21	16	21	39	69	87	54	51
8	13	18	21	29	18	18	17	33	59	85	70	48
9	16	17	21	26	32	15	24	33	66	69	72	69
10	13	14	19	17	23	26	19	39	57	70	53	58
11	18	12	14	17	19	19	22	22	41	52	39	34
12	12	20	10	17	14	17	14	24	27	43	47	45
TOTALS(1)	207	204	232	281	279	256	257	431	746	928	758	729

(1) Excludes special education students at Harborview

Source: Valdez School District

TABLE 5.8.1-5

Valdez Population by Ethnic Group, 1978

Ethnic Group	Number	% of Total
Caucasian	2,986	89.9
Alaska Native	179(1)	5.4(1)
Spanish-American	55	1.7
Black	41	1.2
Asian-Ameican	39	1.2
American Indian	13	0.4
Other	10	0.3
	3,327(2)	

(1) Includes 56 Native residents of Harborview Memorial Hospital.
(2) Excludes 26 whose ethnicity was not reported.

Source: Baring-Gould et al, Valdez City Census, University of Alaska, March, 1978.

TABLE 5.8.1-6

Housing Survey, CCC/HOK, May 1979

Type of Housing	Occupied
Single-family (frame)	196
Single-family (modular)	114
Single-family (mobile homes)	463
Multi-family row units	10
Multi-family apartments	155
Campers, camp trailers	6
Hotel, motel units	10
Commercial-residential combination	16
	970

Source: Northrim Associates; CCC/HOK.

TABLE 5.8.1-7

Number and Types of Inhabited Dwellings in Valdez, 1978
University of Alaska Census

Type of Residence	Number	% of Total
Single-Family Dwelling	222	20.7
Trailers	518	48.4
Condominium	10	0.9
Duplex	143	13.4
Apartment	125	11.7
Motel	39	3.6
Work Quarters	2	0.2
Other, Including Boats	12	1.1
TOTAL	1,071(1)	100.0

(1) Excludes Harborview Hospital, Kennedy and Keystone camps, and Coast Guard barracks.
Source: Baring-Gould, et al, Valdez City Census, University of Alaska, Anchorage, 1978.

TABLE 5.8.1-8

Valdez Population by Type of Housing, 1978
University of Alaska Census

Type of Residence	Number	% of Total
Single-Family Dwelling	772	23.1
Trailers	1,541	46.0
Condominium	21	0.6
Duplex	436	13.0
Apartment	317	9.5
Motel	72	2.1
Hospital Residence	106	3.2
Work Quarters	66	2.0
Other, Including Boats	18	0.5
TOTAL	3,349	100.0

Source: Baring-Gould, et al, Valdez City Census, University of Alaska, Anchorage, 1978.

TABLE 5.8.1-9

Comparison of Various Estimates of Current Valdez Population

Source or Basis of Estimate	Date	Method	Population Estimate
1. City of Valdez(1)	1979	3.05 people/unit x 1469 occupied dwelling units	4,481
2. University of Alaska Census(2)	3/78	Census Survey	3,349
3. Work Force			
a. City Estimate	6/78	1,781(3) (labor force) x 1.8(4) (participation factor)	3,225*
4. School Enrollment		720(5) ÷ .22(6)	3,273*
5. CCC/HOK Housing Survey(7)		970 housing units x 3.0 people/unit	2,910*

(1) Valdez Planning Dept. "Valdez Population, 1979," and "Valdez Housing Units," 2 tables submitted to Office of Revenue Sharing, Dept. of Community and Regional Affairs.
(2) Michael Baring-Gould et al, Valdez City Census, University of Alaska, Anchorage, Alaska 1978.
(3) City of Valdez, Valdez Overall Economic Development Plan, June, 1978, p.10, Table IV, footnote 2.
(4) This factor derived from information in Table 5.8.2-2, based on population of 3,350 minus 106; see discussion in Section 6.10.1.1.
(5) Table 5.8.1-4.
(6) Table 5.8.1-3.
(7) Table 5.8.1-5.
In May, 1979, Copper Valley Electric Association reported 901 residential meters in Valdez.

* Excludes residents of Harborview Hospital.

5.8.2.1 EMPLOYMENT AND ECONOMIC BASE

Valdez was founded in 1897 as a point of departure for an overland route to gold mining districts along the Yukon River. The town acquired permanence and a measure of prosperity early in the century as a transportation link to Fairbanks and the Interior mining districts. Until the Alaska Railroad was completed in 1923 linking Seward and Fairbanks, Valdez was the only all-season port of entry to the Interior of Alaska. In the winter months freight and passengers were hauled weekly to Fairbanks in horse-drawn sleds over the Valdez trail. Also in the early years of the century, Valdez served as a center of transportation and supplies for gold mines in the surrounding mountains.

Construction of the Alaska Railroad from Seward to Fairbanks and the emergence of Anchorage as the largest and most prosperous city in Alaska, combined to eliminate the vital role of Valdez as a port of entry. During the 1930's and 40's a cannery operated in Valdez, but the town never became an important fishing center. Cordova became the capital of the Prince William Sound fishing industry. Cordova also was selected as the railhead for the copper mining industry that flourished near McCarthy in the early years of this century.

The role of Valdez as a transshipment (from ships and barges to surface transportation) and supply point for the Interior was revived twice for brief periods after the town's eclipse by the ports of Seward and Anchorage; once during and shortly after World War II when it served as a port of entry for military cargo headed to the Interior Alaska; and again during the construction of the trans-Alaska pipeline. Valdez became the site of the marine terminal of the pipeline and it was also a supply depot for pipe and material used to construct the southern portions of the line. The mainstay of the Valdez economy in the intervening years has been government employment, and particularly state employment since statehood. Harborview Hospital, a state facility for the mentally and physically handicapped, was built in Valdez, as was the regional office of the State Department of Highways, now the Department of Transportation and Public Facilities. A profile of Valdez published by the Alaska Department of Economic Development (now the Department of Commerce and Economic Development) in early 1969 (presumably based on 1968 data) gives a glimpse of the community's economy just before changes were set in motion by construction of the trans-Alaska pipeline. Table 5.8.2.1-1 shows employment by industry at that time. Almost 69 percent of the town's workforce was employed by government. Payroll records indicate that about 18 people were employed by the City (personal communication, City of Valdez, June 25, 1979). The balance was predominantly state government employment. Table 5.8.2.1-2 shows an estimate of employment in Valdez a decade later by a local citizens group that prepared the city's Overall Economic Development Program (OEDP Committee). Table 5.8.2.1-3 shows employment in Valdez by industry for a 12-month period from October 1977 through September 1978 from the records of the State Department of Labor. These figures differ significantly from the City's OEDP figures, and a comparison between the two sets is represented in Table 5.8.2.1-4.

Employment information collected in the 1978 census is presented in Tables 5.8.2.1-5 and 5.8.2.1-6. Although employment levels

are not identified by industry as they are in Tables 5.8.2.1-2 and 5.8.2.1-3, the number of full-time employed, part-time employed, and unemployed are very close to the estimate by the OEDP Committee. Presumably, therefore, information on Tables 5.8.2.1-2, 5.8.2.1-5 and 5.8.2.1-6 best describe the current structure of the local economy.

The most striking change since pre-pipeline days is the increase in the transportation industry employment (employment at the Alyeska terminal is classified as transportation) and the decrease in the relative proportion of government employment. Unemployment is between 16 percent and 18 percent which is much higher than the current statewide unemployment rate of around 10 percent, which in turn is almost double the national average.

Wages and prices are higher in Valdez than Anchorage and cities in Southeast Alaska. Table 5.8.2.1-7 shows average wage rate in Valdez, Anchorage, and Sitka. The OEDP reports that, according to a survey by the Agricultural Experiment Station at the University of Alaska, Fairbanks, in September 1977, average retail food prices in Valdez were 146% of Seattle prices, in contrast to 118% for Anchorage and 115% for Sitka.

There are no current data available on average per capita or household income in Valdez.

TABLE 5.8.2.1-1

Estimated Valdez Employment, 1968

Industry	Number	% of Total
Agriculture	0	0
Mining	0	0
Construction	15	4.7
Manufacturing	10(1)	3.1
TUC*	15	4.7
Wholesale Trade	8	2.5
Retail Trade	23	7.2
Finance	3	0.9
Service	26	8.1
Government	220	68.8
	320	100

(1) Fluctuates between 7 and 30.

*Transportation, communication and utilities.

Source: Alaska Department of Economic Development (now Commerce and Economic Development). Standard Industrial Survey of Valdez, 1969.

TABLE 5.8.2.1-2

1978 Valdez Employment by Industry,
OEDP Committee Estimate

Industry	Full-Time	Part-Time	% of Total[1]
Mining	0	0	
Construction	209	15	14.8
Manufacturing	0	0	
Transportation[2]	283	17	19.8
Communications & Utilities	35	8	2.8
Wholesale Trade	6	2	0.5
Retail Trade	218	77	19.5
Finance/Insurance/Real Estate	28	6	2.2
Services	(102)	(69)	(11.3)
Business and Repair	68	42	7.3
Personal	28	19	3.1
Religious	6	8	0.9
Government	(404)	(34)	(29.1)
Federal	67	-	4.4
State	288	3	19.3
Local	49	31	5.4
TOTALS	1,285[3]	228[3]	100

(1) Sum of full-time and part-time employed (1,513).
(2) Includes Alyeska employees at marine terminal.
(3) Total full-time and part-time employment 1,513; assumes unemployment of 269 and total labor force of 1,782.

Source: Valdez Overall Economic Development Program, June, 1978.

TABLE 5.8.2.1-3

Valdez Employment by Industry, October 1977 through September 1978
Alaska Department of Labor

Industry	1977			1978								
	Oct.	Nov.	Dec.	Jan.	Feb.	Mar.	Apr.	May	June	July	Aug.	Sept.
Mining	0	0	0	0	0	0	0	0	0	0	0	0
Construction	*	*	*	80	29	44	30	39	60	67	76	71
Manufacturing	*	*	*	*	*	*	*	*	*	*	*	*
TUC(1)	112	107	128	340	332	344	336	342	346	233	195	225
Wholesale Trade	*	*	*	*	*	*	7	12	10	14	13	14
Retail Trade	130	131	143	130	142	137	142	150	155	153	155	137
FIRE(2)	37	36	32	34	32	30	30	31	26	27	27	25
Services	273	257	253	202	199	214	249	254	292	277	293	237
Fed. Govt.	8	7	8	12	13	13	4	5	5	13	15	15
State & Local Govt.	237	239	238	213	225	224	280	382	192	157	226	237
Misc.	*	*	*	*	*	*	*	*	*	*	*	*
TOTALS	797	777	802	1011	972	1006	1078	1215	1086	941	1000	961

* Not disclosed by Dept.
(1) Transportation, Utilities, Communication.
(2) Finance, Insurance, Real Estate
Source: Alaska Department of Labor, Research and Analysis Division, Juneau, Data for area 262 (City of Valdez)

TABLE 5.8.2.1-4

Comparison of Dept. of Labor, City of Valdez
Employment Estimates by Industry, June 1978

Industry	Dept. of Labor[1]		Valdez OEDP Committee[2]	
	Number	% of Total	Number	% of Total
Mining	0	0	0	0
Construction	60	5.5	209	16.3
Manufacturing	*	*	0	0
TUC[3]	346	31.8	318	24.7
Wholesale Trade	10	0.9	6	0.5
Retail Trade	155	14.3	218	17.0
FIRE[4]	26	2.4	28	2.2
Services	292	26.9	102	7.9
Fed. Govt.	5	0.4	67	5.2
State & Local Govt.	192	17.7	337	26.2
Misc.	*	*	---[5]	
TOTAL	1,086	99.9[6]	1,285[7]	100.0

Notes
(1) From Table 5.8.2.1-3
(2) From Table 5.8.2.1-2
(3) Transportation, Utilities, Communications
(4) Finance, Insurance, Real Estate
(5) No entry
(6) Total not equal to 100 percent because of nondisclosure items
(7) Full-time employment only
* Not published to prevent disclosure of information pertaining to identifiable firms.

TABLE 5.8.2.1-5

1978 Valdez Labor Force by Occupation, University of Alaska Census

Occupation	Number	Total
Professional	254	14.2
Managerial & Administrative	194	10.8
Technical	354	19.8
Clerical and Sales	217	12.1
Craftsmen	171	9.6
Operators	158	8.8
Laborers	157	8.8
Service Workers	206	11.5
Boat Owners & Crews	17	1.0
Artists, Writers, and Musicians	16	0.9
Military	45	2.5
TOTAL	1,789(1)	100

(1) Excludes individuals outside the labor force and 31 residents whose occupation was not reported.
Source: Michael Baring-Gould et al, Valdez City Census, University of Alaska, Anchorage, March, 1978.

TABLE 5.8.2.1-6

Unemployment and Part-Time Employment of Valdez Civilian Labor Force, 1978
University of Alaska Census

Employment Status	Number	% of Total
Unemployed	288	16.3
Part-Time Employed	90	5.1
Full-Time Employed	1,386	78.6
TOTAL	1,764(1)	100.0

(1) Excludes military (Coast Guard) and 31 residents whose employment status was not reported.

Source: Baring-Gould, et al. Valdez City Census, University of Alaska, Anchorage, Alaska, March 1978.

TABLE 5.8.2.1-7

COMPARISON OF VARIOUS LABOR WAGE RATES,
VALDEZ, ANCHORAGE AND SITKA (1978)

Job	Wage Rate ($ per hour)		
	Valdez	Anchorage	Sitka
Bartender	11.80	9.43	9.78
Butcher	12.55	10.15	10.54
Carpenter	16.33	13.14	13.62
Cook	12.61	10.15	10.54
Laborer	14.47	11.34	11.77
Lineman	19.55	15.22	15.80
Plumber	16.60	13.14	13.62
Truck Driver	15.92	12.66	13.14
Waitress	11.80	9.43	9.78

Source: Valdez Overall Economic Development Program Committee.

5.8.3 PUBLIC SECTOR REVENUES AND EXPENDITURES

Development of North Slope oil resources required massive investment in production and processing equipment on the North Slope, in 800 miles of pipeline and pump stations across the State, and in the marine terminal at Valdez. These facilities represented tremendous potential resources for taxing authorities that could reach them. For its part, the State of Alaska adopted a special statewide 20-mill property tax on petroleum exploration, production, and transportation property. On the North Slope, a new borough was created with power to tax property at Prudhoe Bay. The City of Valdez expanded its city limits from 4 to 275 square miles in order to include the Alyeska terminal within the city limits and hence within its taxing power. Because of the high value of the industry facilities within their boundaries, and their comparative small population, the North Slope Borough and the City of Valdez have become anomalies in the State of Alaska. The North Slope Borough has assessed value of $591,664 per capita; Valdez $372,589 per capita. The state average (including Valdez and the North Slope Borough) is only $47,342 per capita.

Table 5.8.3-1 is a summary of the fiscal year (July 1 - June 30) 1979 budget for Valdez. Of the $12.6 million budget, some 39% is allocated to capital improvements. In 1979 Valdez had debt service of $1,597,577 or about 12.6% of total expenditures. Valdez does not have a personal property tax, nor does it have a sales tax (repealed in 1976). The real property tax rate of about 6 mills is one of the lowest in the State.

Valdez is the only city in Alaska with a permanent fund. In 1977 the voters set aside some $13.5 million to be held perpetually in trust for the city residents. Earnings of the fund may be used for capital projects or operating expenses of the City, but the principal may only be invested in income-producing instruments such as Federal and State obligations, bank certificates of deposit, corporate bonds, etc.

Table 5.8.3-2 shows the growth of general fund expenditures in Valdez from 1968 to 1980. This table reveals the rapid transformation of Valdez from a typical small town in Alaska to the second wealthiest municipality in the State (on a per-capita basis).

Table 5.8.3-3 compares aspects of the public finances of the City of Valdez and the Municipality of Anchorage in 1978. Although metropolitan areas typically have more and higher public service expenditures per capita than small towns, Valdez spent almost twice as much per capita as Anchorage on general government, and over three times as much per capita on capital improvements. Valdez had a much lower average property tax rate (5.7 mills in 1978) than did the Anchorage area (about 14 mills in 1978). Although Anchorage has a higher total assessed value, Valdez has 13 times the per-capita assessed value of Anchorage. While Valdez has over twice as much bonded debt as Anchorage on a per-capita basis, this debt represents only .75% of its total property valuation, in contrast to 4.38% in Anchorage. The total debt of local governments in Alaska is limited by law to 15% of total local property value. In

addition to the $60.3 million of bonded debt ($12.3 million plus $48 million approved by the voters in 1978), Valdez has $9.6 million of other debts, or a total debt of approximately $70 million. With property assessed at $1.63 billion, Valdez currently has a debt margin of about $175 million. Statutory limits on the power of local government to tax property (discussed in Section 6.10.4) apply only to revenue raised for general operating purposes, not to revenue used to repay bonded debt. Since Valdez is restricted by law in its ability to raise general revenues through its property tax, it is encouraged to fund capital expenditure projects through general obligation bonds.

TABLE 5.8.3.-1

Summary of Valdez City Budget, 1978 - 1979

Revenue	Amount	Percent
Surplus Carry-Forward	$ 1,970,000	15.6
Taxes	8,731,404	69.2
Use Revenue, Interest Income	1,313,000	10.4
State Revenue	491,000	3.9
Other	118,000	.9
	$12,623,404	100%
Expenditures		
General Fund(1)		
Council and Administration	$712,189	5.6
Engineering	198,661	1.6
Police	786,724	6.2
Fire and EMS	376,002	3.0
Streets	612,050	4.8
Parks, Recreation and Campgrounds	323,462	2.6
Library and Museum	139,019	1.1
Health, Hospital	366,400	2.9
Planning and Zoning	75,177	0.6
Education	3,430,465	27.2
Other	546,864	4.3
General Fund Transfers		
Utilities	4,561	0.0
Boat Harbor	139,280	1.1
Capital Improvements	4,912,550	39.0
TOTAL	$12,623,404	100%

Notes

(1) Functions are summaries of 25 actual budget line items

Source: City of Valdez 1978-79 Budget and Summary of Capital Program.

TABLE 5.8.3-2

City of Valdez, General Fund

Expenditures 1968 - 1980

Year	General Fund Expenditures Total	Per Capita
1968	$ 293,418	$ 367
1969	352,814	
1970	435,545	432
1971	596,723	
1972 (6 months)	(416,668)(1)	
1973	624,232	
1974	561,912	
1975	2,255,916	
1976	4,570,826	
1977	4,821,251	
1978	11,163,381	
1979 (budget)	12,623,404	2,817(2)
1980 (budget)	13,755,482	

(1) In 1972 the City fiscal year changed from the calendar year to July 1 - June 30.

(2) Based on population of 4,481; $3,765 based on estimate of 3,350.

Source: Annual Financial Report of the City of Valdez, 1972 through 1978: Valdez City Budget, 1979 and 1980.

TABLE 5.8.3-3

Comparison of Selected Public Fiscal Measures,
City of Valdez and Municipality of Anchorage 1978

	Valdez	Anchorage
Per capita[1] general government expenditures	$963[2]	$539[2]
Per capita capital projects expenditures	$1,130	$357
City employees per thousand population	13	10
Property tax levy (area wide average) (in mills)	5.7[3]	14[4]
Real and personal property valuation (full value) (in billions)	$1.67[5]	$5.27
Per capita real and personal property valuation (full value)	$372,589[5]	$28,517
Per capita bonded debt	$2,752[6]	$1,248
Bonded debt as percentage of full value	.74[6]	4.38

Notes

(1) 1978 per capita calculations made on the basis of official population estimates (State of Alaska) of 184,775 for Anchorage; 4,481 for Valdez.
(2) Excludes local support of schools; Source: City of Valdez Budget, 1979 - 1980; Municipality of Anchorage. The 1978 Budget in Brief.
(3) There were two tax zones in Valdez in 1978 with millage rates of 6.127 and 5.3204 respectively.
(4) There were 14 tax zones in the Municipality with millage rates from 17.67 (Anchorage) to 10.42 (Borough outside Bowl).
(5) Valdez does not have a personal property tax; Anchorage does.
(6) In 1979 Valdez increased its bonded debt four fold with the sale of $48 million in General Obligation Bonds for construction of a new port.

5.8.4 PUBLIC SERVICES AND FACILITIES

The provision of public services in Valdez was severely strained during construction of the trans-Alaska pipeline. The array of services available today is a partial response by various service providers to their experiences in coping with the pipeline boom and its aftermath.

This section describes the public services offered in Valdez including health care, education, social services, fire protection and police. These services are examined from the perspective of current programs and facilities as well as growth planned to occur independent of the proposed Alpetco petrochemical facility.

HEALTH CARE

A number of providers contribute to the medical care system in Valdez. Public facilities include the 15-bed Valdez Community Hospital, the Valdez Mental Health Center and the Harborview Developmental Center, which is a state facility for the mentally and physically handicapped. A public health nurse provides early childhood services, communicable disease surveillance, immunizations, school health services, maternity care and women's clinics. Three physicians, a dentist and an optometrist provide private medical services; this care is supplemented by specialists who visit Valdez on a periodic basis. Emergency medical care is provided by the Emergency Service Team, an organization staffed by trained volunteers.

A detailed description of the health care system is presented below.

VALDEZ COMMUNITY HOSPITAL

As part of the reconstruction of Valdez following the 1964 earthquake, the Harborview Memorial Hospital was built, providing 150 beds for the developmentally disabled and and 15 beds for use by community residents. The facility was completed in 1967 and in 1975, a management contract for operation of the general hospital wing, now known as the Valdez Community Hospital, was given by the City to Lutheran Hospitals and Homes Society of America, a nonprofit organization.

The Valdez Community Hospital is a 15-bed facility with one emergency room. The hospital has a staff of 23, comprised of full- and part-time personnel. Minor surgery is performed at the hospital. Valdez residents with serious or emergency medical problems that cannot be treated locally are airlifted to Anchorage for care.

The community hospital is a City-supported facility. The hospital's operating budget, which was approximately $620,000 in both 1978 and 1979, is derived from operating revenues and from City funds. According to the hospital director, room rates are lower than those charged by hospitals elsewhere in Alaska. The City has deferred raising room rates for the past few years, preferring instead to meet the increasing costs of health care with monies from the general fund.

At present, the hospital is being utilized well below its capacity, in part because Valdez's generally young workforce has few health care problems (Val Stasch, Director, Valdez Community Hospital).

VALDEZ MENTAL HEALTH CENTER

The pipeline era in Valdez was accompanied by certain indications of an increase in human stress and psychological problems, although the precise relationship between pipeline construction and stress-related incidents is difficult to evaluate. The Baring-Gould and Bennett study of the 1974-1975 period of pipeline construction in Valdez noted an increase in the divorce rate, an increase in alcohol-related crimes and in crimes of violence, an alcohol-related death, and eleven possible heart attacks (Baring-Gould and Bennett, 1976, pp. 32-33). In less dramatic ways the changes and pressures resulting from rapid population growth altered community life in Valdez.

The Valdez Mental Health Center was established in response to mental health issues and concerns in the community. With the selection of a director, the Valdez Mental Health Center began full-time operation early in 1979. In its first full year of operation, the center's first priority has been to meet the mental health needs of the current residents of Valdez. The director believes that the incidence of alcohol abuse in the current population of Valdez, as in other areas of Alaska, is higher than the nationwide average; as a consequence, he has instituted a counseling program.

Sources of the center's budget, estimated to be $92,500 for the current fiscal year, include State and City contributions, client payments and third party payments.

PRIVATE MEDICAL CARE

Valdez is served by three resident physicians and by specialists who visit the community on a recurrent basis. Two of the three resident physicians operate the Valdez Medical Clinic, located in the National Bank of Alaska Building. Other medical practitioners include a dentist and an optometrist, who opened an office early in 1979.

Specialists based in Fairbanks visit Valdez on a fixed schedule: an ear, nose and throat doctor every six weeks; an opthamologist every three months; and an orthopedist every six months.

EMERGENCY MEDICAL SERVICE

The residents of Valdez rely on a voluntary team of local residents for the provision of emergency medical service. The 22 persons who comprise the Emergency Medical Service team provide ambulance and first-aid service on a 24-hours-a-day basis. The voluntary team works in cooperation with the Valdez Fire Department.

The demand for emergency medical services grew during the pipeline boom. Service responses increased from 79 in 1974 to 148 in 1975,

154 in 1976, and 200 in 1977. With the completion of pipeline activity and Valdez's loss of population, demand for services has declined.

Recently, residents of Valdez have discussed the possibility of hiring a full-time Emergency Medical Service director ("Full-Time EMS Director Needed," Valdez Vanguard, April 11, 1979, p. 2). The Valdez Fire Chief has included the position of full-time director as part of its 1979-1980 budget request.

EDUCATION

At the time of the 1964 earthquake, Valdez had only one high school and one elementary school; both facilities were damaged by the earthquake. A new six-classroom elementary school was the first building constructed on the new Mineral Creek townsite. In 1966 a high school was built at the townsite.

During the Alyeska pipeline boom, Valdez's two schools were hard pressed to accommodate the influx of new children into the community. Table 5.8.4-1 shows the extent to which enrollment in Valdez schools increased between 1967 and 1977. When compared to a total school enrollment of 324 in September 1973, the Valdez school population grew to 493 in 1974, an increase of 52 percent; to 834 students in 1975, an increase of 157 percent; and to 1,011 students in 1976, a 212 percent increase over the 1973 enrollment figures. At the height of the pipeline boom, the school system had to use every available space in town as classrooms, including church basements, and had to resort to double shifts. As soon as it could, the school system increased its capacity by ordering modular classrooms, four units for the high school and eleven for the elementary school (Leask, September, 1976, p. 34). The community passed bond issues in 1975 authorizing expansion of the elementary school from its original six classrooms to fourteen permanent classrooms and, in 1976, authorizing construction of a new high school.

Valdez now has three schools, all located in proximity to one another in new Valdez. The Growden-Harrison Elementary School has fourteen permanent classrooms and twelve modular classrooms. Beginning in September 1979, the elementary school will contain grades K through 6 rather than K through 5. The George H. Gilson Junior High School, which earlier served as the high school, has eight permanent classrooms. Beginning in September 1979, the junior high school will house grades 7 and 8 rather than grades 6, 7, and 8. Valdez Senior High School, completed in 1977, has 22 classrooms and contains grades 9 through 12.

The Valdez school system also provides special education programs to developmentally disabled children residing at the Harborview Developmental Center, which is a State-operated facility. Mentally and physically handicapped children receive instruction either at Harborview or in two modular classroom units adjacent to the elementary school.

School officials have expressed dissatisfaction with the elementary school's 12 modular units, which have been plagued by a variety of maintenance problems. Without the modular units, the elementary school would be able to accommodate only 301 students instead of the 439 presently enrolled. Table 5.8.4-2 compares the enrollment in elementary, junior and senior high schools with the design capacity of these facilities.

To remedy this situation, the School Board in August, 1979, authorized the construction of a 24-classroom elementary school designed for approximately 500 students, and a seven-classroom school to teach approximately 90 residents of Harborview Developmental Center. Both schools will be located on a 14.5-acre site off Klutina Street, south of the Black Gold Subdivision.

As one of its planning activities, the school administration is projecting changes in school enrollment based on both the continuation of present trends and on the completion of the proposed Alpetco facility. Without consideration of the Alpetco project, the school district is projecting an annual growth rate of 3 percent. Table 5.8.4-3 contains enrollment projections for the years 1979-1982.

SOCIAL SERVICES

The Division of Social Services, part of the State Department of Health and Social Services, employs one social worker in Valdez on a part-time basis. It is the responsibility of the social worker to provide information and referral about the following State programs: adoptive service; child protection service; counseling; early and periodic screening, diagnosis and treatment for health problems; foster care; homemaker service; and other programs.

The current caseload in Valdez numbers 35, of which 22 relate to child protection. Caseload records prior to 1978 are incomplete.

FIRE DEPARTMENT

Prior to 1977, the Valdez Fire Department was operated entirely by volunteer firemen. With the increase in population during the Alyeska pipeline boom came a significant increase in the number of responses made by the Fire Department. As shown in Table 5.8.4-4, the number of responses increased from 28 in 1974 to 65 in 1975, 67 in 1976, and 92 in 1977; with the completion of the pipeline, responses have declined. Many of the responses during the pipeline era resulted from fires accidentally started by construction workers trying to heat their small trailers and mobile homes. In the opinion of the Fire Chief, trailers and mobile homes are not designed for year-round living in an area with Valdez's climatic conditions.

Valdez residents indicated a high approval of the fire protection services offered by their volunteer fire department during the pipeline era. Residents, in a 1975 survey requesting them to rate their satisfaction with various community services, gave the Fire Department the highest rating, with 88.2 percent rating fire protection services as good or average (Baring-Gould and Bennett, 1976, p. 48).

In July 1977, the Valdez City Council authorized four full-time positions for the Fire Department. At present, paid staff includes the Fire Chief, one fire truck mechanic, and two fire fighters. The Comprehensive Employment Training Act (CETA) funds the salary of one fire fighter trainee and one secretary (CETA). Paid staff is supplemented by 56 volunteers.

Valdez is served by four stations located at City Hall, the airport, Robe River Substation, and 10 Mile. Table 5.8.4-5 lists equipment at each fire station.

At the present time the Fire Department has the same number of staff and a greater amount of equipment that it did at the height of pipeline activity in 1977 when Valdez had a population in excess of 8,000. The Department certainly has adequate capacity to meet current and projected needs, independent of the proposed Alpetco facility.

POLICE

The impact of the construction of the trans-Alaska pipeline on the demand for criminal justice services was comparatively greater in Valdez than in the State as a whole. The State Criminal Justice Planning Agency, in an analysis of statewide patterns of crime during the construction of the pipeline, concluded that:

> "...crime did not increase in proportion to the population increase; this year [1978], however, there was a substantial decrease in the number of crimes reported. Since 1973, the population of Alaska increased by twenty-seven percent and the number of crimes reported by forty-seven percent. The crime rate, however, only increased by sixteen percent. This means that the large increase in the state's population was not accompanied by a comparable increase in the crime rate."(Office of the Govenor, Criminal Justice Planning Agency, Crime in Alaska - 1978 Juneau, 1979, p. 3.)

Valdez, however, unlike the State, did experience a rate of increase in criminal activity greater than its population growth. An analysis of this impact found that "complaints and arrests [in Valdez] increased dramatically during 1974 and 1975, at a rate far in excess of the three- to five-fold* increase in population, with steady increases in larcenies, drunken disturbances, and alcohol-related offenses (Baring-Gould and Bennett, 1976, p.30). Table 5.8.4-6 presents monthly statistics on criminal complaints and arrests in Valdez during the height of the pipeline boom.

*Valdez's population increased three-fold if construction camp residents are not included in the total and five-fold if they are. The camps maintained their own security personnel whose records are not included in the above analysis.

The size of the Valdez Police Department expanded in response to the increased demand for services. From a staff of two prior to the commencement of the pipeline, the Department expanded to six in 1974-1975, to nine in 1975-1976, and to 11 in 1976-1977.

Despite the growth in the crime rate during the boom, Valdez residents expressed satisfaction with the performance of the Police Department. When Valdez residents were asked to rate community services, the Police Department received the third best rating, with 46.3 percent of the respondents rating the Police Department average, and 36 percent, good (Baring-Gould and Bennett, 1976, p. 48).*

Statistics compiled by the Criminal Justice Planning Agency and supplied by the City of Valdez mirror the statewide trend of a reduced incidence of crime following the completion of the pipeline. Table 5.8.4-7 presents crime statistics for Valdez for the years 1976-1978.

At present, the City of Valdez has 13 full-time officers (including the Chief of Police) as well as five full-time dispatchers. Of the 13 officers, one is an investigator and one is a juvenile officer.

A wing of the new City Hall, scheduled to be completed in December 1979, will be occupied by the Valdez Police Department. These new facilities, which include offices, a seven-cell holding facility with 12 beds and a maintenance area for police vehicles, will remedy the space deficiences of the Department's old quarters.

*The Fire Department received the highest rating, followed by the garbage collection service.

Table 5.8.4-1

VALDEZ CITY SCHOOLS

September Enrollment Report

1967-1979

	Elementary (K-5)	Jr. High (6-8)	Sr. High (9-12)	Harborview	Total
1967	104	44	59	0	207
1968	87	54	63	17	221
1969	105	63	64	31	263
1970	132	72	77	38	319
1971	131	60	88	38	317
1972	122	57	77	54	310
1973	115	63	79	67	324
1974	208	105	118	62	493
1975	370	185	191	88	834
1976	439	255	243	83	1011
1977	367	180	211	82	840
1978	368	155	206	79	808
1979	439	111	215	80	845

Source: Valdez City Schools; CCC/HOK

Table 5.8.4-2

COMPARISON OF STUDENT ENROLLMENT

AND SCHOOL DESIGN CAPACITY

1979

	Estimated Student Enrollment Sept. 1979*	Design Capacity Permanent Classrooms
Elementary (K-6)	439	301**
Junior High (7-8)	111	172
Senior High (9-12)	215	400

Source: Valdez City Schools; CCC/HOK

*Estimated figures by Valdez school administration, assuming 3% annual growth.
**The balance of 138 elementary school students are taught in 12 modular units with a design capacity of 250 students.

TABLE 5.8.4-3

VALDEZ CITY SCHOOLs

September Enrollment Report Projections

in the Absence of the Alpetco Project[1]

1979-1982

	Elementary (K-6)	Jr. High (7-8)	Sr. High (9-12)	Total[2]
1979	439	111	215	765
1980	453	115	222	790
1981	466	118	228	812
1982	480	121	235	836

Source: Valdez City Schools; CCC/HOK.

(1) Estimated figures by Valdez school administration, assuming 3 percent annual growth.
(2) Excluding Harborview Development Center.

TABLE 5.8.4-4

Summary of Valdez Fire Department Responses

1972-1979

	1972	1973	1974	1975	1976	1977	1978	1979[1]
Structure Fires	9	4	12	17	7	18	15	8
Mobile Home Fires	4	2	6	18	29	24	10	6
Vehicle Fires	1	-	-	7	8	6	5	-
Oil/Gas Spill	-	1	-	2	4	10	7	5
False Alarms	-	2	-	7	4	7	5	11
Emergency Medical Assistance	-	2	-	-	1	7	1	1
Other[2]	4	4	10	14	14	20	18	11
Total Responses	18	15	28	65	67	92	61	42
Damage ($000)	284.3	18.5	145.3	181.7	338.7	305.0	45.7	69.1
Man-hours Worked[3]	270	202	292	436	659	1035	829	484

Source: Valdez Fire Department, CCC/HOK.

(1) Department responses through April 30, 1979.
(2) Other includes rubbish fires, smoke scares, search and rescue, and standby for hazardous situations.
(3) Includes only hours worked in responding to calls, not hours spent by full-time staff on maintenance and office work or hours spent in training.

TABLE 5.8.4-5

Fire Fighting Equipment

STATION #1 (City Hall)

1 - 1967 American La France 1000 GPM
1 - 1977 International 250 GPM
1 - 1977 Cheve Superior Ambulance

On Order

1 - 1979 Seagraves 1500 GPM

STATION #2 (Airport)

1 - 1973 Ford 750 GPM
1 - 1953 GMC 1800 Gallon Tanker
1 - 1974 Airport Crash Truck Dodge
1 - Overlight 6KW Generator Trailer

STATION #3 (Robe River Subdivision)

To be constructed late 1979

Equipment Expected for this Station

1 - 1979 4000 Gallon Tanker
1 - 1979 3500 Gallon Tanker Pumper 750 GPM

STATION #4 (10-Mile)

1 - 1942 Ford 500 GPM
1 - 1953 Jeep 250 GPM
1 - 1964 White 1200 Gallon Tanker
1 - 1972 GMC Ambulance

On Order

1 - 1979 Spartian 4000 Gallon Tanker

Expected on 79-80 Budget

1 - 1979 3500 Gallon Tanker Pumper 750 GPM

1 - Chief's Staff Car
1 - Service Truck

Source: Valdez Fire Department.

TABLE 5.8.4-6

CRIMINAL COMPLAINTS AND ARRESTS-VALDEZ

1974-1975

	Criminal Complaints	Arrests		Criminal Complaints	Arrests
1/74	4	2	1/75	21	5
2/74	1	0	2/75	37	7
3/74	4	1	3/75	81	21
4/74	5	1	4/75	67	33
5/74	17	2	5/75	61	17
6/74	26	7	6/75	63	14
7/74	28	7	7/75	105	10
8/74	45	8	8/75	110	22
9/74	41	11	9/75	114	19
10/74	60	13	10/75	124	36
11/74	39	7	11/75	161	40
12/74	37	6	12/75	122	34

Source: Michael Baring-Gould and Marsha Bennett, Social Impact of the Trans-Alaska Pipeline Construction in Valdez, Alaska 1974-1975 (Anchorage, 1976), p. 30.

TABLE 5.8.4-7

CRIME STATISTICS - VALDEZ

1976-1978(1)

	Number of Indexed Crimes(2)	Number of Adult Arrests	State Estimate of Valdez Population
1976	480	300	6670
1977	324	177	8253
1978	266	63	8793

Source: Criminal Justice Planning Agency

(1) Comparable data not available priot to 1976.
(2) Indexed crimes include violent crimes (murder, forcible rape, robbery and aggravated assault) and property crimes (burglary, larceny-theft and motor vehicle theft).

5.8.5 LAND USE

The purpose of this section is to provide an overview of land use and development at the regional and local levels. The study includes an identification of areas of existing and potential natural resource development, and areas of recreational use potential and high scenic quality. At the local level, existing and emerging land use and ownership patterns are examined with particular emphasis on housing and areas suitable for new residential development.

5.8.5.1 REGIONAL LAND USE AND RESOURCE DEVELOPMENT

This section discusses existing and potential land use in the area around Valdez. Land use is examined in terms of possible long-term changes which might occur in the absence of refinery development. The most likely impetus for change would come from development of such resources as fisheries, timber, hardrock minerals and possibly agriculture in Interior Alaska. Land ownership, pending land disposition, and use restrictions are also considered, insofar as they could affect development feasibility.

The City of Valdez lies at the end of Port Valdez, a fiord in the northeast corner of Prince William Sound. The City's jurisdictional limits encompass 274 square miles extending both sides of Port Valdez from the Narrows to Keystone Canyon (see Figure 5.8.5.1-1). Southwest of the City is the Chugach National Forest, whose boundary falls within the city limits in its southwest quadrant. Surrounding the City to the north and east are the mountains and glaciers of the Chugach Mountains, much of which has been selected for ownership by Ahtna Regional Native Corporation. Most of this area is wilderness.

Widely separated communities in the area include Cordova, 45 miles southwest, and the native village of Tatitlek, 23 miles south of Valdez, and Glennallen, 100 miles north of Valdez. A fisheries-related economy supports most residents of communities in Prince William Sound, with secondary support coming from government, tourism, private services, and timber and mineral development - not necessarily in that order. Most employment in Valdez is derived from government and the transportation industry (which includes Alyeska).

Changes in the economy of any one of these communities have normally had little influence on others in the region for two principal reasons: community isolation, and the existence of major economic forces outside of the region. First, long travel distances over water and land, difficult terrain and a severe climate have encouraged local independence. Second, exogenous factors such as growth in Federal or State government, and restrictions on the use of Federal and State land spawned stronger ties to such cities as Juneau, Anchorage and Fairbanks, than to any smaller nearby communities. Growth and change in Valdez, for example, influences and is influenced more by its connection to cities outside the region, than by any activities within the region.

With respect to resource development feasibility in remote areas, proximity to a nearby community is not normally an important factor. Although there might be significant timber and mineral resources in the area, the actual presence or scarcity of a resource

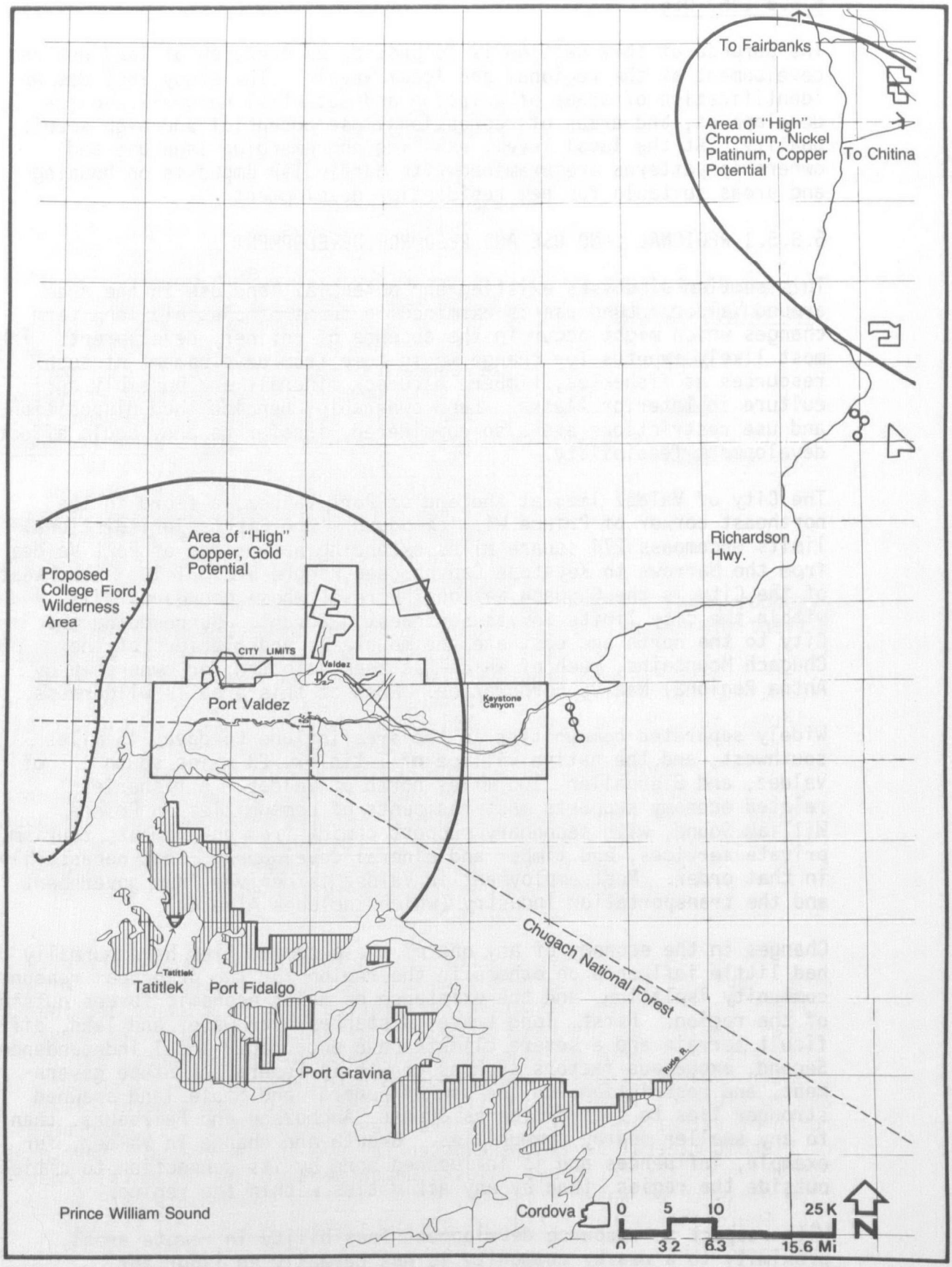

Existing and Potential Resources Development

Potential Timber Cuts on Native Selected Land

Group of Lode Mining Claims

Group of Placer Claims

5.8.5.1-1

is also less important than other variables. Available export markets, restrictions on land ownership and use, climatic conditions, and transportation problems all affect the feasibility and timing of resource development. Valdez, for example, hopes to overcome some of these limitations by construction of new port facilities for export of agricultural products, and timber trucked over the Richardson Highway from inland locations.

With respect to timber development, all of the present commercial timber harvests in the impact area are located in the Chugach National Forest. The annual allowable cut is 67.5 million board feet (MMbf) or only .4% of a total accessible volume of 15,700 MMbf (Chugach National Forest, DEIS Land Ownership Adjustment Proposal from the Chugach Natives Inc. and Koniag Inc. to the Chugach National Forest in Alaska, July 1978, p. 42). Only 8.5 MMbf was harvested in 1977. Wilderness designation of portions of the Chugach National Forest, if implemented, would discontinue timber forest and timber stand improvement projects, and mineral entry would be prohibited after 1983 (U.S. Department of Agriculture, Forest Service, Alaska Supplement to Draft Environmental Statement Roadless Area Review and Evaluation, June 1978, p. 60). Exploration and development could continue until that time, but no significant mining developments are expected in the immediate future. The termination or continuation of these restrictions will depend on further planning, resulting in the Forest Land Management Plan for the Chugach National Forest, expected by 1980.

Within the national forest, timber could be harvested and minerals extracted on regional- and village-selected land. Under an amendment to the Alaska Native Claims Settlement Act, the Chugach Native Corporation was allowed to exchange lands within the Forest, for lands already selected outside the Forest. Selections have been made in the vicinity of Tatitlek. If pending Section d-2 amendments to the Act are ratified by the U.S. Congress, both surface and subsurface development rights would be allowed. The timber and hardrock mineral development potential of areas around Tatitlek is rated high (Alaska Department of Transportation and Public Facilities, Prince William Sound Regional Transportation Study, Oct. 1978, pp. 6-33). By contrast, timber development around Valdez, with the exception of approximately 100 acres southeast of Port Valdez, is rated low (op. cit.).

The likelihood of changes in the fishing industry or mining activity which would materially affect land use in the region is small. With respect to fisheries, historical statistics confirm a major decline in overall numbers of fish in Prince William Sound (increases in harvest in recent years were not due to an increase in the resource, but greater numbers of boats operating) (Alaska Department of Transportation and Public Facilities, op. cit., pp. 6-24). Isolated mineral claims north of Valdez are mostly inactive (see Figure 5.8.5.1-1), and areas of highest mineral development potential are in the Wrangell Mountains, 100 miles to the northeast (Alaska Department of Environmental Conservation Division of Water Programs, Water Quality Management 1978 Volume Two, Sources of Water Pollution and Management Actions in Alaska, August 1978).

In summary, there is little potential for resource development in the region which could significantly affect settlement patterns in Valdez or in any other nearby communities.

Further, the development of even the highest quality resources in Prince William Sound might not take place in the near future. The Alaska Department of Natural Resources estimates that most coastal timber and mineral resources will not be developed for at least 25 years (Alaska Department of Transportation and Public Facilities, op. cit.). With the exception of improvements to fisheries and possible petroleum development of the Outer Continental Shelf, no significant new resource developments are anticipated within the 1990 impact assessment horizon for the Alpetco refinery.

5.8.5.2. SCENIC RESOURCES

The Valdez region is characterized by steep-walled fiords, mountains and glaciers, and dense coastal forests. Port Valdez is a three-mile wide, glaciated fiord extending east-west about 14 miles. At its eastern end, mountains quickly rise to a height of 3,000 to 5,000 feet from the river deltas and level glacial moraines which identify the built-up and developable portions of the City. (see Figure 5.8.5.2-1)

Most level terrain is confined to a narrow strip of land along the coast; nearly all development is within a mile of the water's edge. The significant exceptions are the existing airport and the site of the proposed Alpetco refinery. The center of the refinery site is located approximately 2-1/2 miles inland, at the base of mountains which rise 3,000 feet in a space of 1-1/2 miles. Figure 3.3-5 illustrates a view of the refinery seen against the background of these mountains.

Port Valdez has been given the name "Switzerland of Alaska" because of its fine views of mountains, glaciers and rivers. The most prominent views are generally directed across Port Valdez from either the Richardson Highway or Dayville Road. Consequently, views across the water are obstructed more by development along the water's edge than by inland development. However, the large scale of the mountains tends to diminish the size of even such large installations as the Alyeska pipeline terminal.

Views of the natural environment and man-made features are significantly modified by climatic and seasonal changes. Heavy snows and roadside snow storage can block views of natural features as well of objectionable views of industrial depots and litter-strewn yards. Under heavy snows, even large structures such as buildings and tanks can take on amorphous shapes which blend with the landscape.

5.8.5.3 RECREATION RESOURCES

Because the area is so large and the population levels are still low, the intensity of recreational use in Prince William Sound varies between communities and wilderness areas. Numerous opportunities exist for sport fishing, hunting, hiking, camping, skiing, and boating throughout the study area. Most activity occurs at facilities provided by Federal, State, and local agencies (see Figure 5.8.5.3-1).

CHUGACH NATIONAL FOREST

West of Valdez Arm is the Columbia Glacier Unit of the Chugach National Forest, an area of approximately 7,000 acres, which has a summer

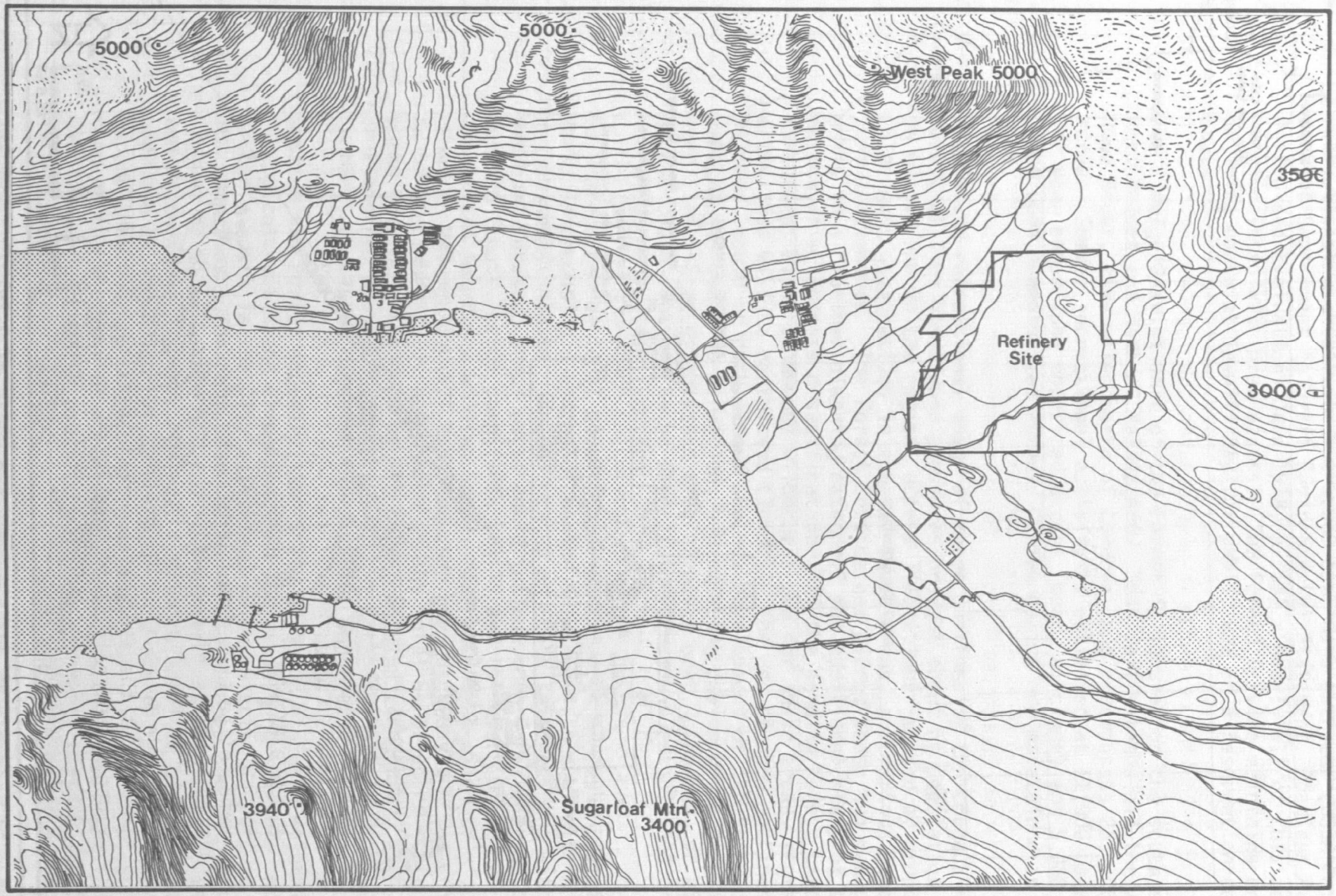

Scenic Features

5.8.5.2-1

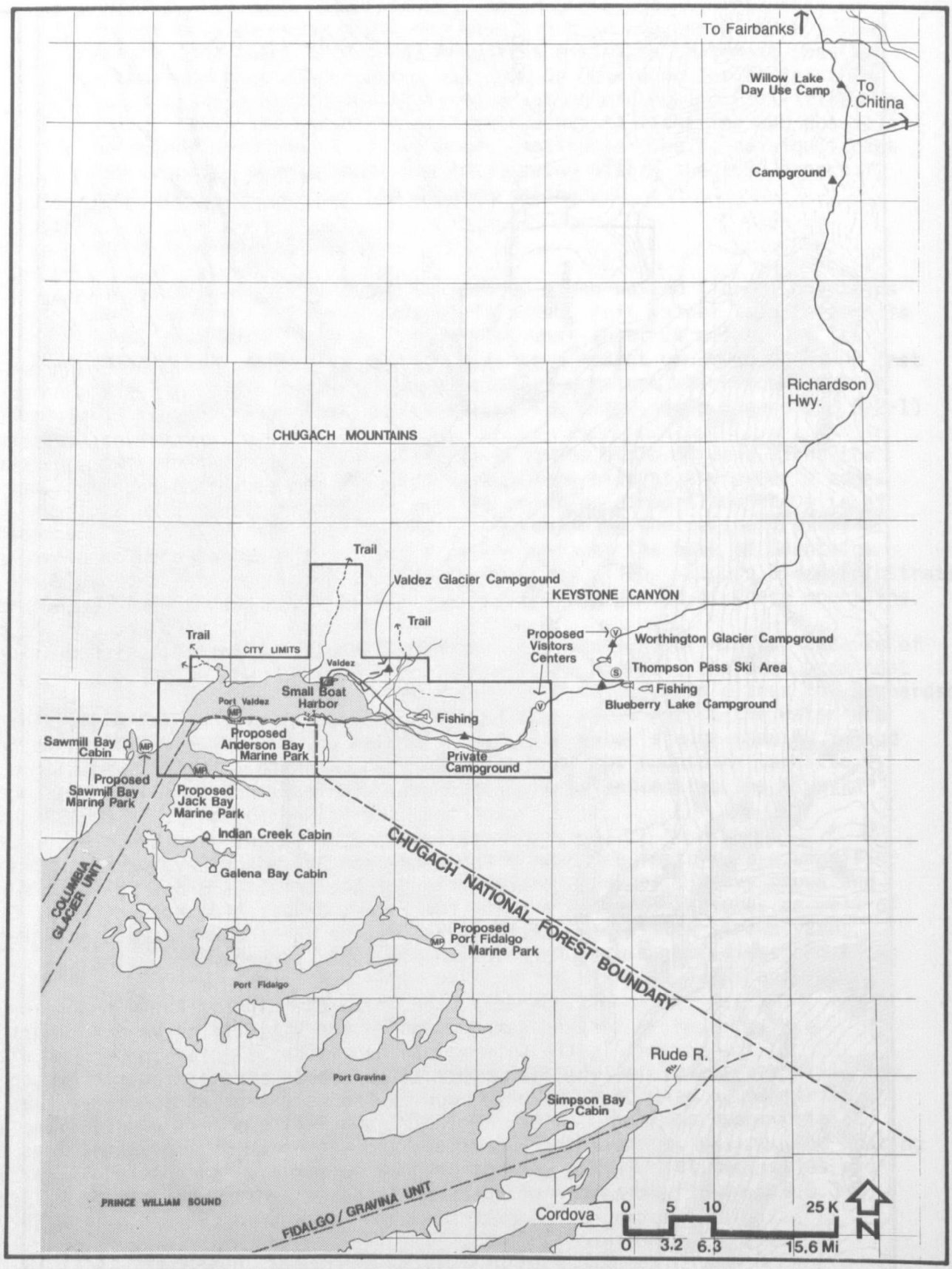

Existing and Proposed Recreation Facilities

5.8.5.3-1

recreational use estimated at 5,000 user days per year (USDA Forest Service Supplement to Draft Environmental Statement, Roadless Area Review and Evaluation, June 1978, p. 58). Nearly all of this activity is associated with boat access. The Forest Service maintains one outlying cabin at Sawmill Bay for public use on a reservation-only basis.

The Fidalgo/Gravina Unit of the Forest is located on the south side of Port Valdez and east of Valdez Arm. This unit extends all the way to Rude River, five miles north of Cordova, and encompasses 233,700 acres. Summer recreational activity is estimated at 12,000 user days per year based upon motorized access (boat, airplane) and 5,000 days based upon nonmotorized access. Three cabins are maintained in this area.

The future recreational usage of these portions of the Chugach National Forest will be based upon pressures brought about by population growth in Alaska and in the region, access limitations imposed by proposed wilderness designations in some of these areas, and various pending land settlements. The Forest Service has placed these two management units in a "further planning category" for additional study of the merits of wilderness classification. If the pending Forest Land Management Plan recommends wilderness use for these areas, recreational activities will be restricted (Ibid.). The use of snow machines, now allowed, would be prohibited. No new development of cabins, docks, or campgrounds would be permitted, and existing cabins would be eliminated over time. Some established area of power boat, airplane, or air boat access could continue to be used if their use was established prior to the wilderness classification.

To improve recreational boating opportunities, the Alaska Division of Parks is proposing a system of marine parks in Prince William Sound and Southeast Alaska. To be located on state-selected land within the National Forests, these parks could include such facilities as docks, mooring floats, beach campsites, trails and toilets. Of the 25 sites identified in Prince William Sound, four potential sites are located close to Valdez: Sawmill Bay, Anderson Bay, Jack Bay and Port Fidalgo. As of September 1979, only three of the total 64 proposed state marine parks have been approved by the Forest Service (Johannsen, Neil, Chief of Planning, Alaska State Parks, Marine Parks for Alaska, the International Connection, Alaska Magazine, April 1979, unnumbered reprint).

Outside the Forest boundary, the State Division of Parks maintains five picnic sites and campgrounds in the vicinity of Valdez. Northeast of the airport is the City-maintained Valdez Glacier Campground with 101 campsites. The four other sites are located on the Richardson Highway at Mile 9, Mile 12, and in Thompson Pass at Blueberry Lake, and Worthington Glacier. Only 12 campsites and five picnic sites are provided at these four locations and there are no immediate plans to expand them. During periods of peak summer use, recreational vehicles camp on the shoulder of roads when spaces are unavailable in Valdez Glacier Campground - a practice which is not restricted by the City of Valdez (Rutherford, 1979).

The State Division of Parks has proposed the development of a new State Park in Keystone Canyon, covering an area of approximately 12

square miles (Alaska Division of Parks, Proposed Keystone Canyon State Park, 1975, unnumbered pamphlet). Three new campsites with a total of 150 units, three picnic areas, and 14 trails totaling 70 miles are among the proposed improvements. The Legislature has taken no action on this proposal, in part because of the interest of the City of Valdez in developing the park itself, a $50,000 expenditure has been projected in the 1983-1984 budget. The Valdez Parks Department, however, believes that there is insufficient land in the narrow canyon to accommodate campgrounds as large as the State has envisioned.

CITY RECREATIONAL FACILITIES

The City of Valdez has recently begun an ambitious plan to expand its recreational facilities. Boating facilities at the Valdez Small Boat Harbor were enlarged from 180 slips to 349 slips in 1978. A greater number of larger slips have been included, reflecting increased use of bigger pleasure craft for longer trips into Prince William Sound. The actual number of boats using the port during the peak summer season may be double the number of slips (Rutherford, 1979). The harbor still has additional capacity for approximately 100 boats (Valdez Harbormaster, 1979). The Harbormaster's office indicates that a new commercial small boat harbor will be built in three to four years at a location east of the Small Boat Harbor, possibly in conjunction with the City's proposed new industrial port.

The Valdez Parks and Recreational Department was formed in response to new population growth brought about by the Alyeska pipeline terminal development. A number of new facilities have been built since then, including parks, playgrounds, and athletic play areas (e.g., tennis and volleyball), in the new townsite. A ski area has been built at Thompson Pass - Keystone Canyon, Mile 27 of the Richardson Highway. Trails have also been constructed in Keystone Canyon, Mineral Creek Canyon, and at Gold Creek, leading to old mines.

The recent provision of these facilities does not so much reflect any standard associated with community population projections, as it does a belief among residents that recreational facilities were "very inadequate" as recently as 1975 (Baring-Gould and Bennett, Social Impact of the Trans-Alaska Pipeline Construction in Valdez, Alaska, 1974-1975, 1976). Because of the City's uniquely sound financial position, it has been able to rapidly improve facilities.

The City's 1978/79 Parks and Recreation budget is $400,000. Improvements planned in 1979-80 include a $100,000 camper park tentatively located on University of Alaska land near the Small Boat Harbor; preliminary plans for a new ski area at Mile 19; $1 million in bike path construction; and a multipurpose indoor facility for tennis, handball, weight-lifting, and locker rooms. Construction of the recreational facility will require voter authorization of bond sales. The preliminary five-year budget includes parks, trails and an indoor ice rink (see Preliminary Draft, City of Valdez 1979-1989 Budget Preparation, Appendix).

A recreational hiking trail is planned in conjunction with the proposed Solomon Gulch hydroelectric project in a narrow stream channel which enters Port Valdez near the site of the proposed Alpetco terminal

dock. The trail would commence at a small parking lot on Dayville Road and end at the dam upstream. Recreational usage is projected at 500 visits per year (Federal Energy Regulatory Commission, Final Environmental Impact Statement Solomon Gulch Project No. 2742-Alaska, 1978, p. 3-5).

SUMMARY

Demand for recreational facilities is expected to continue to grow faster than the population in the region grows. Opportunities for construction of facilities in the Columbia Glacier and Fidalgo/Gravina Units of the Chugach National Forest are great, but feasibility of development will remain unclear until completion of the Forest Land Management Plan. Population growth in Southcentral Alaska will help to encourage development of the proposed state marine parks, as well as maintain existing Forest Service wilderness cabins. Lands within the Forest with the most potential for recreational resort development appear to be those selected by the Chugach Native Corporation. Growth in resident population and tourism in Valdez could broaden the market for such facilities.

The 1979-1980 budget for the Valdez Parks and Recreation Department is the largest of any City department. The size of the proposed five-year budget of the department ($18.5 million) indicates a significant commitment on the part of the City to making Valdez a more livable year-round community. Although the budget has not been outlined on the basis of any population projections, the budgeted facilities would meet the needs of a significantly larger population than now exists.

5.8.5.4. VALDEZ CITY LAND USE

The original Valdez townsite was established on the large delta formed by the streams draining from Valdez Glacier. Because this area periodically flooded, a V-shaped dike was constructed around its inland perimeter. However, the Great Alaska Earthquake of 1964 destroyed the town, requiring its relocation to an area west of Mineral Creek. City limits were established extending from Mineral Creek to beyond the former townsite. The town at that time covered a total land and water area of approximately 15 square miles. However, with impending development of the Alyeska pipeline terminal in 1973, the City expanded to its present 274-square mile limits to encompass the Alyeska marine terminal on the south side of Port Valdez and isolated homes and areas with potential for development to the east along the Richardson Highway.

Today, human use of the land within the city limits is small. The former and present townsites, including the Pipeline Terminal and isolated subdivisions east of the City, comprise a total of less than five square miles, or 2 percent of the City (see Figure 5.8.5.4-1). Mountains and water area cover 230 square miles or 85% of the total area. Within the developed areas, the largest portion is devoted to industrial uses, which, together with the port, storage depots and the Alyeska terminal comprise approximately 2,500 acres. The airport has 800 acres. Approximately 460 acres are in developed housing. Public uses such as the State Department of Transportation and Public Facilities and the hospital occupy an additional 65 acres.

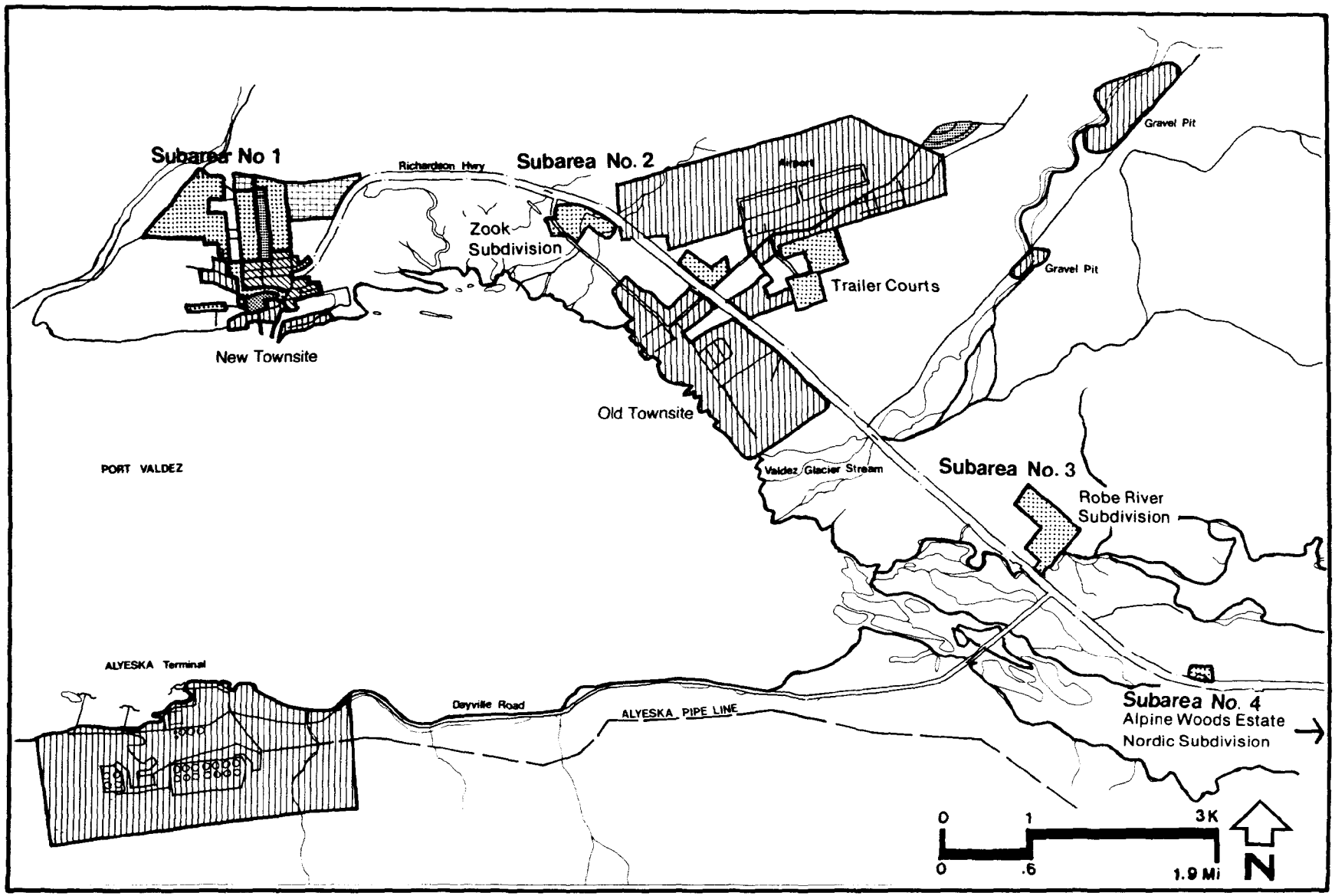

Existing Land Use

Residential
Industrial
Commercial & CBC
Parks and Recreation
Public
Open Space

5.8.5.4-1

The City has grown, particularly in industrial and residential land uses. Most of this development has taken place on formerly undeveloped land; but some residential properties have been converted from other use. For example, U.S. Coast Guard housing was built on a 13-acre Army recreation site west of the new Junior/Senior High School.

Most of the land area in the vicinity of the proposed Alpetco project is undeveloped. The proposed refinery, pipeline alignments, terminal dock and most of the access road alignments are on undeveloped land. The secondary access road will utilize the existing Glacier Stream Haul Road for most of its distance from the construction dock to the refinery site. The proposed mobilization yard is a 110-acre site formerly used by Alyeska for pipe storage.

5.8.5.5 RESIDENTIAL LAND USE

Available land for residential uses and production of housing becomes both essential and difficult to provide during periods of rapid industrial growth. In no sector of urban life in Valdez was the impact of rapid growth during the construction of the trans-Alaska pipeline more keenly felt than in the availability and cost of housing. With the impacts of the pipeline on residential land uses in Valdez serving as recent history, an examination of past and present housing conditions is a requisite to forecasting the impacts likely to result from the proposed Alpetco facility.

THE PIPELINE ERA

When construction of the pipeline began in 1974, Valdez already suffered from a housing shortage and lack of infrastructure necessary to expand residential areas - two legacies from the relocation of the community following the 1964 earthquake. At that time, most of the city's housing stock was located in three subdivisions: Mineral Creek Subdivision (New Valdez), Zook Subdivision (near Old Valdez), and Robe River Subdivision (south of proposed Alpetco site). These areas are identified in Figure 5.8.5.5-1. Scattered housing existed along the Richardson Highway and close to the Small Boat Harbor.

In the opinion of University of Alaska sociologists, Valdez in 1974 was unprepared for the rapid growth it was about to experience. This lack of preparedness was attributed to a number of factors, including the lack of monetary and technical support from the State government before community impacts were well underway; an overly optimistic attitude about the severity of probable impacts and a lack of information from the oil companies and other industries on what impacts Valdez could expect and what their requirements would be. Accompanying this lack of preparation and understanding was an assumption that industry would rectify any problems which emerged (Baring-Gould and Bennett, 1976, p. 12).

In the absence of anticipatory planning, Valdez leaders had to rely on a series of ad hoc decisions regarding the expansion and location of new housing stock. By May, 1976, housing conditions were chaotic: as many as 30 trailer owners at a time squatted on available land to avoid paying rent at trailer parks (David Oehler, Police Chief, City of Valdez); many trailers appeared in the Zook and Robe River subdivisions contrary to the Zoning Code, and some were placed adjacent to bars and restaurants in which owners of the trailers were employed. Because of the shortage, existing housing rapidly increased in value. The administrator of the Valdez Rent Review Board, established by Governor Jay Hammond in mid-1975 to prevent unjustifiable rent increases, reported that some two- or three-bedroom trailers rented for $1,000 or more a month. High pipeline-related salaries, however, helped offset the expense of such rentals (Linda Leask, 1976, p. 35). This condition encouraged the explosion growth in the number of mobile homes, which today account for nearly 60 percent of the single-family dwellings in the community.

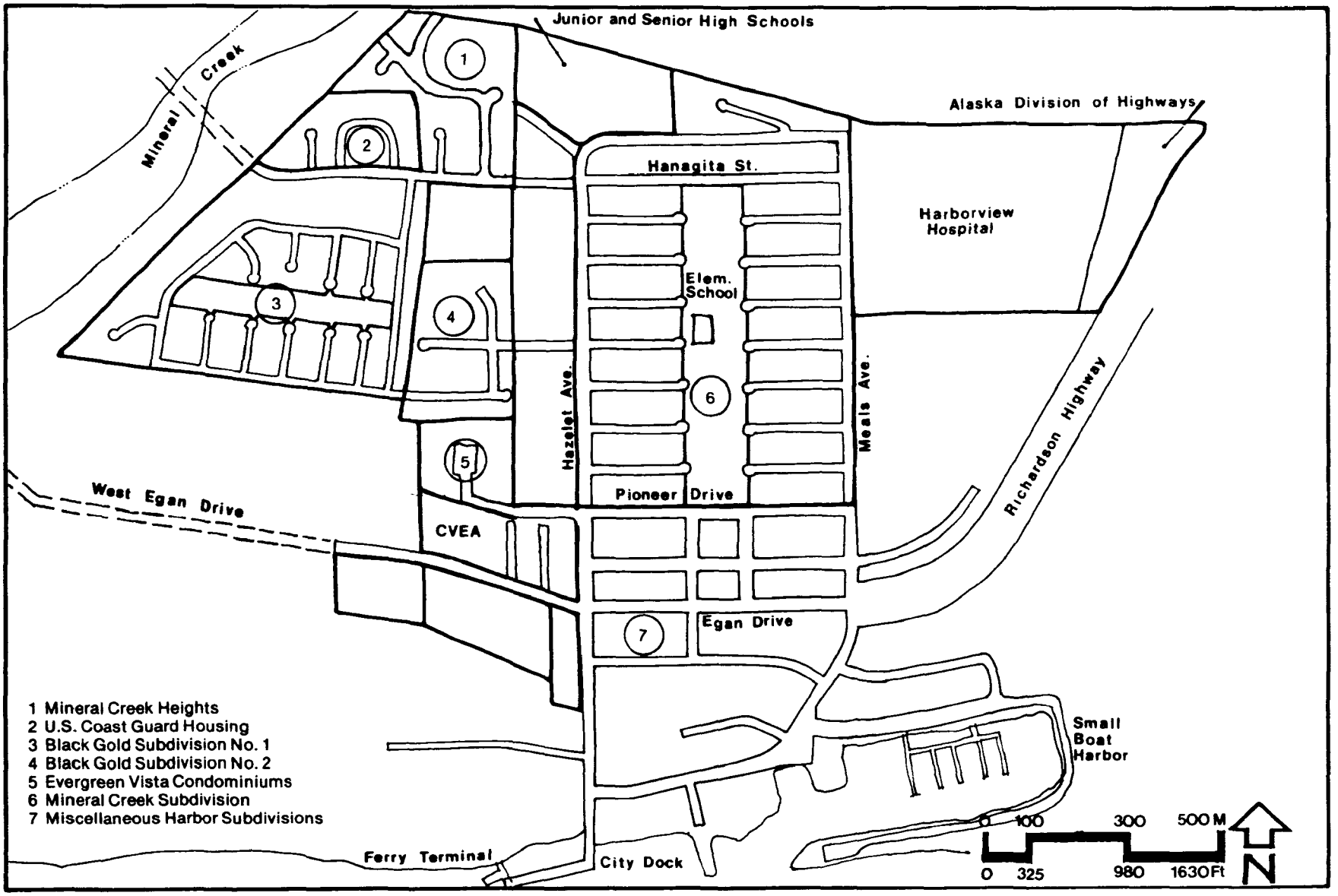

New Valdez Housing

5.8.5.5-1

Both the public and private sectors responded to the demand for housing. In 1974, the State of Alaska, in response to State employees who were faced with the twin problems of housing scarcity and cost, authorized the construction of a mobile home park adjacent to Harborview Development Center and the State Highway Maintenance Buildings so that low-cost space would be available.

Several private entrepreneurs came to Valdez to help meet the demand for housing. One of these was Roy Madsen from Juneau, who in 1974 purchased 40 lots in the Mineral Creek Subdivision between Hazelet Avenue and Meals Avenue. Madsen bought modular units, placed them on permanent concrete foundations and arranged a long-term lease with Alyeska.

However, Alyeska became the primary source for new housing in Valdez during the pipeline boom. When construction of the trans-Alaska pipeline began in 1974, Alyeska could not find enough qualified workers who were willing to live in Valdez on a eight-weeks-on, two-weeks-off rotation without the provision of housing (W. M. McCoy, Alyeska Pipeline Service Company). Alyeska's analysis of the local housing market in Valdez showed that a high portion of the homes in the city were mobile homes; little, if any, surplus housing existed. Alyeska decided to provide two kinds of housing: managers and technical advisors were provided the opportunity to rent single-family residences in new Valdez. Contract employees in the construction trades were quartered in dormitory-style units adjacent to the Alyeska worksite, an area that became known as Terminal Camp, or in leased trailer units at Keystone and Kennedy Camps, located near Valdez airport.

Housing for management staff was constructed on 56 acres west of Hazelet Avenue in an area subdivided as Black Gold Number 1 and Black Gold Number 2 (also called Fluor Housing). The area was zoned for single-family units only, but Alyeska received a five-year conditional use permit from the city to place temporary housing on the site at a density twice that permitted by the zoning ordinance. This development consisted of 200 modular units that were manufactured in Arizona and barged to Valdez. During the construction of the Alyeska terminal, each unit rented for $500 per month, fully furnished. This subsidized rate was 30 to 50 percent less than prevailing rentals in Valdez during that time.

Alyeska housed a great percentage of its construction workforce at Terminal Camp, a site adjacent to the marine terminal. The camp consisted of approximately 300 trailers, which were arranged to form groups of barracks. Each barrack accommodated 104 men in 52 two-man rooms. At capacity, the camp housed 3,500 persons. The camp was entirely self-contained, with its own water and sewage treatment plants and five diesel generators providing electricity. In addition to barracks, Terminal Camp had a recreation hall with pool tables, exercise room, sauna, theatre, snack bar, commissary, television room and post office. A first-aid station was located in one of the barracks. With the completion of the pipeline, use of the camp has been discontinued, although all facilities remain in place today.

In examining the period of the pipeline boom, it is clear that Alyeska's intervention in the housing market lessened the severity of the overall housing shortage. Even so, existing and new residents were directly affected in the quality, price and selection of housing available to them. The period of shortage and escalating prices also postponed the purchase of single-family homes by long-time residents who had been living in mobile homes since the post-earthquake years, and wished to move into more permanent housing. With rapidly escalating prices perhaps some of these mobile home residents have been permanently priced out of the market for conventional frame dwellings.

EXISTING HOUSING CONDITIONS

Because existing land use maps and other documents proved to be of little use in accurately describing Valdez's current housing stock, a housing survey was undertaken in May 1979. The survey consisted primarily of a visual inspection from an automobile of the housing stock, supplemented by interviews with city officials, local realtors, contractors and other Valdez residents. The survey included estimates of tenancy (number of rented and owner-occupied units), vacancy status and condition of housing (units in good repair, vacant or abandoned). The survey also provided an estimate of the number of vacant residential lots and vacant trailer spaces.

An overview of all housing in Valdez will be given before examining sub-areas of the City. As shown in Table 5.8.5.5-1, Total Occupied Housing in Valdez by Tenancy, Valdez has 970 occupied housing units: 738 or 76 percent are owner-occupied, while 232 or 24 percent are rented. Excluding motel units, the predominent housing type in Valdez is the mobile home; slightly more than half of all housing units are mobile homes. Single-family houses comprise 20 percent of the total and multi-family apartment units 16 percent (Table 5.8.5.5-2).

The condition of most housing in Valdez is good, a category defined in the survey as "all housing that appears to be inhabited, is in good repair, or needs minor repairs once the summer construction season permits." Table 5.8.5.5-2, Total Housing in Valdez by Condition of Housing, indicates that of the 1,247 total housing units, 1,204 (96.5 percent) are in good condition, 6 units (0.5 percent) need repair and 37 units (3.0 percent) are abandoned.

The vacancy rate for housing units, excluding motel rooms and abandoned units, is quite low at 3.1 percent (derived from Table 5.8.5.5-3). The 25 vacant units, 17 of which are mobile homes, are all in good condition (Table 5.8.5.5-4). The low vacancy rate is an important characteristic of the Valdez housing stock. It indicates that very little slippage exists, and that there is not sufficient housing available to absorb a significant portion of the demand for housing the proposed Alpetco facility would generate. The low vacancy rate might be caused by a reluctance by builders to construct housing during the post-pipeline years - a time when the city's population might not be growing. This reluctance is greatest with respect to newer multi-family housing, for which there has not been a broad market acceptance. The issue of housing mix is discussed in more detail in Section 6.10.6.3, Valdez Land Use.

Valdez has 760 vacant residential lots and trailer spaces, almost equally divided between lots and spaces (Table 5.8.5.5-3). Most of the vacant lots are located in the new townsite (140 lots), the Robe River Subdivision area (114 lots), and the Alpine Woods and Nordic Subdivisions area (106 lots). Mobile home parks with the greatest number of vacant spaces are Southcentral Trailer Court (185 spaces) and Bayport Trailer Court (103 spaces).

The following is a description of the Valdez housing stock on a subarea basis, identified on Figure 5.8.5.5-1.

NEW TOWNSITE (SUBAREA 1)

The new townsite contains 794 housing units, or about 64 percent of Valdez's housing stock. The housing of this area is quite diversified, with multi-family apartment units the most plentiful, followed by single-family mobile homes, single-family houses and the single-family modulars in the Black Gold Subdivision. Most of the motel units are located within this area. Vacant residential lots comprise 140 of the total 142 vacant residential lots and trailer spaces (Table 5.8.5.5-5).

During the past year, the Black Gold Subdivision has been in transition. Under the terms of the initial agreement between Alyeska and the City, Alyeska agreed to remove its modular units from the site at the expiration of the conditional use permit in 1979. The City agreed in 1979 that a portion of the modular units could remain if they were brought up to code. However, because Alyeska no longer wishes to own and manage real estate holdings in Valdez, it is ending its financial interest in this subdivision.

Alyeska has resubdivided the Black Gold Subdivision No. 1 into 145 lots (see Figure 5.8.5.5-1). Lot sizes range from 8,000 to 17,000 square feet, with an average lot size of 10,000 square feet. Of the 145 lots, Alyeska has sold 93 lots, each with a modular unit, to their employees. Each modular unit is being placed on a permanent foundation. The sales price for lot and modular unit range from $74,000 to $96,000, with an average price of approximately $85,000. The remaining modular units have been offered for sale at a price of $27,000 to individuals wishing to remove them from the site.

At a cost of $7-8 million, Alyeska is making site improvements, including the construction of a storm drainage system that will extend from the subdivision to Port Valdez; the burying of utilities; the construction of curbs and gutters; and the paving of streets. Once these improvements are completed around mid-October, 1979, the remaining 52 lots will be sold for approximately $23,000 per lot. Alyeska employees will be given the first opportunity to purchase lots; any lots not sold to Alyeska employees will be offered to the general public (Ellis Mercer, General Manager, Alyeska Enterprises, Inc., Valdez).

To assure that its employees will have an adequate supply of housing, Alyeska has incorporated a buy-back provision in its sales contract with its employees. As part of this agreement, Alyeska retains the

first option to repurchase a modular unit that one of its employees wishes to sell. Alyeska will pay the purchase price within one year of purchase by the employee. After one year, Alyeska will purchase the unit either for its appraised value or the purchase price, whichever is greater. In this way, the employee can gain from appreciating values while Alyeska can provide future employees with housing.

ZOOK SUBDIVISION AND AIRPORT AREA (SUBAREA 2)

This subarea is located near the old townsite and includes the Bayport, Southcentral and Allied Trailer Courts adjacent to the airport as well as Zook Subdivision and other housing along Mineral Creek Loop Road.

The single-family mobile home is by far the dominant housing type here: of the 264 total units, 235 are single-family mobile homes, of which 30 are abandoned and 20 are vacant. The remaining housing units are almost all single-family houses and a few trailers. Table 5.8.5.5-6 summarizes land use in this subarea.

Mobile homes and trailers in the Bayport, Southcentral and Allied Trailer Courts are subject to snow loading and high winds (particularly strong in this area). Each year two to three mobile homes or trailers are blown over and many more receive wind-related damage (Michael Schmidt, Planning Director, City of Valdez).

The groundwater level is quite high in the airport area, resulting in the failure of septic tank systems used by trailer courts. Also, this area is zoned industrial and housing is not permitted. For these reasons, the City is interested in gradually phasing out the use of mobile homes in this subarea.

ROBE RIVER SUBDIVISION (SUBAREA 3)

This area includes Robe River Subdivision, Rainbow Trailer Court and nearby houses. Mobile homes on 10,000-square foot lots predominate, comprising 97 of the total 120 units. Single-family houses are sited on one-third to one-half acre lots.

Although Robe River has more than 100 vacant lots, more intense development awaits extension of city water and sewer services, improvements that are at least partially dependent upon construction of the Alpetco project (see Section 6.10.8.1). This area's high groundwater level has caused localized problems of septic tank failure and well water contamination.

Robe River Subdivision has had single-family houses constructed on lots already developed, replacing older mobile homes. Table 5.8.5.5-7 summarizes residential land use in this area.

ALPINE WOODS AND NORDIC SUBDIVISIONS (SUBAREA 4)

This subarea includes housing along the Richardson Highway and within the Alpine Woods and Nordic Subdivisions. This portion of Valdez has 65 housing units, about equally divided between single-family houses and single-family mobile homes, as shown in Table 5.8.5.5-8.

The Alpine Woods Subdivision is characterized by poor roads and potential flooding from the Lowe River. Residents of the area rely on individual on-site water and sewage treatment. These factors might limit the development of the subdivision's 100 or more vacant lots.

TABLE 5.8.5.5-1

Total Occupied Housing in Valdez by Tenancy

Type of Housing	Tenancy Owned	Tenancy Rented	Total
Single-Family (Frame)	192	3	196
Single-Family (Modular)	94	20	114
Single-Family (Mobile Home)	429	34	463
Multi-Family Row Units	--	10	10
Multi-Family Apartment Units	--	155	155
Campers, Camp Trailers	6	--	6
Hotel, Motel Units	--	10	10
Commercial-Residential Combined (including boats)	16	--	16
TOTAL HOUSING UNITS	738	232	970

Source: Northrim Associates, Inc.; CCC/HOK.

TABLE 5.8.5.5-2

Total Housing in Valdez by Condition of Housing

Type of Housing	Condition of Housing: Good	Needs Repair	Abandoned	Total
Single-Family (Frame)	197	1	2	200
Single-Family (Modular)	114	-	-	114
Single-Family (Mobile Home)	481	5	35	521
Multi-Family Row Units	10	-	-	10
Multi-Family Apartment Units	161	-	-	161
Campers, Camp Trailers	6	-	-	6
Hotel, Motel Units	219	-	-	219
Commercial-Residential Combined (including boats)	16	-	-	16
TOTAL HOUSING UNITS	1,204	6	37	1,247

Source: Northrim Associates, Inc.; CCC/HOK.

TABLE 5.8.5.5-3

Total Housing in Valdez

Summary of Visual Survey

Type of Housing	Good	Needs Repair	Abandoned	Total	Vacant	Rental
Single-Family (Frame)	197	1	2	200	2	3
Single-Family (Modular)	114			114		20
Single-Family (Mobile Home)	481	5	35	521	23	34
Multi-Family Row Units	10			10		10
Multi-Family Apartment Units	161			161	6	161
Campers, Camp Trailers	6			6		
Hotel, Motel Units	219			219	209	219
Commercial-Residential Combined	16	-	—	16	—	—
TOTAL HOUSING UNITS	1,204	6	37	1,247	240	447

Vacant Lots	370
Vacant Trailer Spaces	390
Total No. Vacant Residential Lots and Spaces	760

Source: Northrim Associates, Inc.; CCC/HOK.

TABLE 5.8.5.5-4

Vacant Housing in Valdez by Condition of Housing

Type of Housing	Condition of Housing: Good	Condition of Housing: Needs Repair	Total
Single-Family (Frame)	2	-	2
Single-Family (Modular)	-	-	-
Single-Family (Mobile Home)	23	-	23
Multi-Family Row Units	-	-	-
Multi-Family Apartment Units	6	-	6
Campers, Camp Trailers	-	-	-
Hotel, Motel Units	209	-	209
Commercial-Residential Combined	-	-	-
TOTAL HOUSING UNITS	240	-	240

Source: Northrim Associates, Inc.; CCC/HOK.

TABLE 5.8.5.5-5

Summary of Visual Survey of New Townsite

Type of Housing	Good	Needs Repair	Abandoned	Total	Vacant	Rental
Single-Family (Frame)	132			132	1	3
Single-Family (Modular)	114			114		20
Single-Family (Mobile Home)	149	4		153	1	6
Multi-Family Row Units	10			10		10
Multi-Family Apartment Units	161			161	6	161
Campers, Camp Trailers	2			2		
Hotel, Motel Units	209			209	202	209
Commercial-Residential Combined	13			13		
TOTAL HOUSING UNITS	790	4	0	794	210	409

Vacant Lots	140
Vacant Trailer Spaces	2
Total No. Vacant Residential Lots and Spaces	142

Source: Northrim Associates, Inc.; CCC/HOK.

TABLE 5.8.5.5-6

Summary of Visual Survey for
Zook Subdivision and Airport Area

Type of Housing	Good	Needs Repair	Abandoned	Total	Vacant	Rental
Single-Family (Frame)	21	1	1	23	-	-
Single-Family (Modular)	-	-	-	-	-	-
Single-Family (Mobile Home)	204	1	30	235	20	7
Multi-Family Row Units	-	-	-	-	-	-
Multi-Family Apartment Units	-	-	-	-	-	-
Campers, Camp Trailers	3	-	-	3	-	-
Hotel, Motel Units	-	-	-	-	-	-
Commercial-Residential Combined	3	-	-	3	-	-
TOTAL HOUSING UNITS	231	2	31	264	20	7

Vacant Lots	10
Vacant Trailer Spaces	375
Total No. Vacant Residential Lots & Spaces	385

Source: Northrim Associates, Inc.; CCC/HOK.

TABLE 5.8.5.5-7

Summary of Visual Survey for
Robe River Subdivision Area

Type of Housing	Good	Needs Repair	Abandoned	Total	Vacant	Rental
Single-Family (Frame)	13	-	-	13	-	-
Single-Family (Modular)	-	-	-	-	-	-
Single-Family (Mobile Home)	97	-	5	102	1	21
Multi-Family Row Units	-	-	-	-	-	-
Multi-Family Apartment Units	-	-	-	-	-	-
Campers, Camp Trailers	-	-	-	-	-	-
Hotel, Motel Units	10	-	-	10	7	10
Commercial-Residential Combined	-	-	-	-	-	-
TOTAL HOUSING UNITS	120	-	5	125	8	31

Vacant Lots	114
Vacant Trailer Spaces	13
Total No. Vacant Residential Lots and Spaces	127

Source: Northrim Associates, Inc.; CCC/HOK.

TABLE 5.8.5.5-8

Summary of Visual Survey for Richardson Highway, Alpine Woods and Nordic Subdivisions

Type of Housing	Good	Needs Repair	Abandoned	Total	Vacant	Rental
Single-Family (Frame)	31	-	1	32	1	-
Single-Family (Modular)	-	-	-	-	-	-
Single-Family (Mobile Home)	31	-	-	31	1	-
Multi-Family Row Units	-	-	-	-	-	-
Multi-Family Apartment Units	-	-	-	-	-	-
Campers, Camp Trailers	1	-	-	1	-	-
Hotel, Motel Units	-	-	-	-	-	-
Commercial-Residential Combined	-	-	-	-	-	-
TOTAL HOUSING UNITS	63	-	1	64	2	-

Vacant Lots	106
Vacant Trailer Spaces	-
Total No. Vacant Residential Lots & Spaces	106

Source: Northrim Associates, Inc.; CCC/HOK.

5.8.5.6 EMERGING LAND USE PATTERNS IN VALDEZ

This section discusses future land use patterns in Valdez in terms of usable land for new development in specific areas. Important considerations in this analysis include actions of the City of Valdez to encourage new development, and planning mechanisms of Federal, State, and City agencies which control land use.

PUBLIC IMPROVEMENTS AND LAND AVAILABILITY

Since the completion of the Alyeska pipeline terminal, the City has sought to encourage new economic growth and development. Many improve ments have been made to roads, utilities, schools and recreational facilities to better serve existing and future residents. Additional facilities are planned to encourage tourism, including possible relocation of the ferry terminal to a larger, tourist-related commercial development site east of Mineral Creek, and construction of a new recreational vehicle campsite near the small boat harbor (Schmidt, 1979).

In addition to such capital improvement projects, the City is planning to lease portions of its municipal land entitlement to private developers for residential and industrial development. A total of 4,800 acres of land are expected to be conveyed to the City by December 1979, by the Alaska Division of Lands, under authority of the Municipal Entitlement Act, Section 29.18 as amended. The 1,425-acre Alpetco refinery site is included in this land selection (see Figure 5.8.5.6-1). Tentative approval of the selections has been granted and the City is now awaiting survey instructions to complete its application for final patent, scheduled for August 1979.

Of the total entitlement, 640 acres west of Mineral Creek has been identified by the City for residential development. The balance of 4,160 acres has been designated for industrial development and includes all of the Alpetco site as well as a 300-acre parcel east of the Alyeska terminal (See Figure 5.8.5.6-1). By leasing parcels from its entitlement, the City expects to be able to meet any conceivable long-term demand for industrial acreage associated with, or independent of, Alpetco (Schmidt, 1979).

Land for new residential development in Valdez is also expected to be made available by the State Division of Lands. Approximately 300 acres of State land east of Robe Lake was classified in 1978, and is scheduled for disposition in the spring of 1980 (Dean Brown, Division of Lands, 1979). Lots will be platted which vary in size from 2-1/2 to five acres, depending upon site suitability for septic tank filter fields.

LAND USE PLANNING

The regulation of land use in Valdez is both typical of other small communities in Alaska and uniquely different. It was only in May 1978 that a full-time Planning Director was appointed and a Planning Department formed. Before that time, land use decisions were made by various other City departments, the City Manager and Council. Although compre hensive plans were prepared in 1965 and again in 1971, neither served as effective guides for development because there was no one responsible

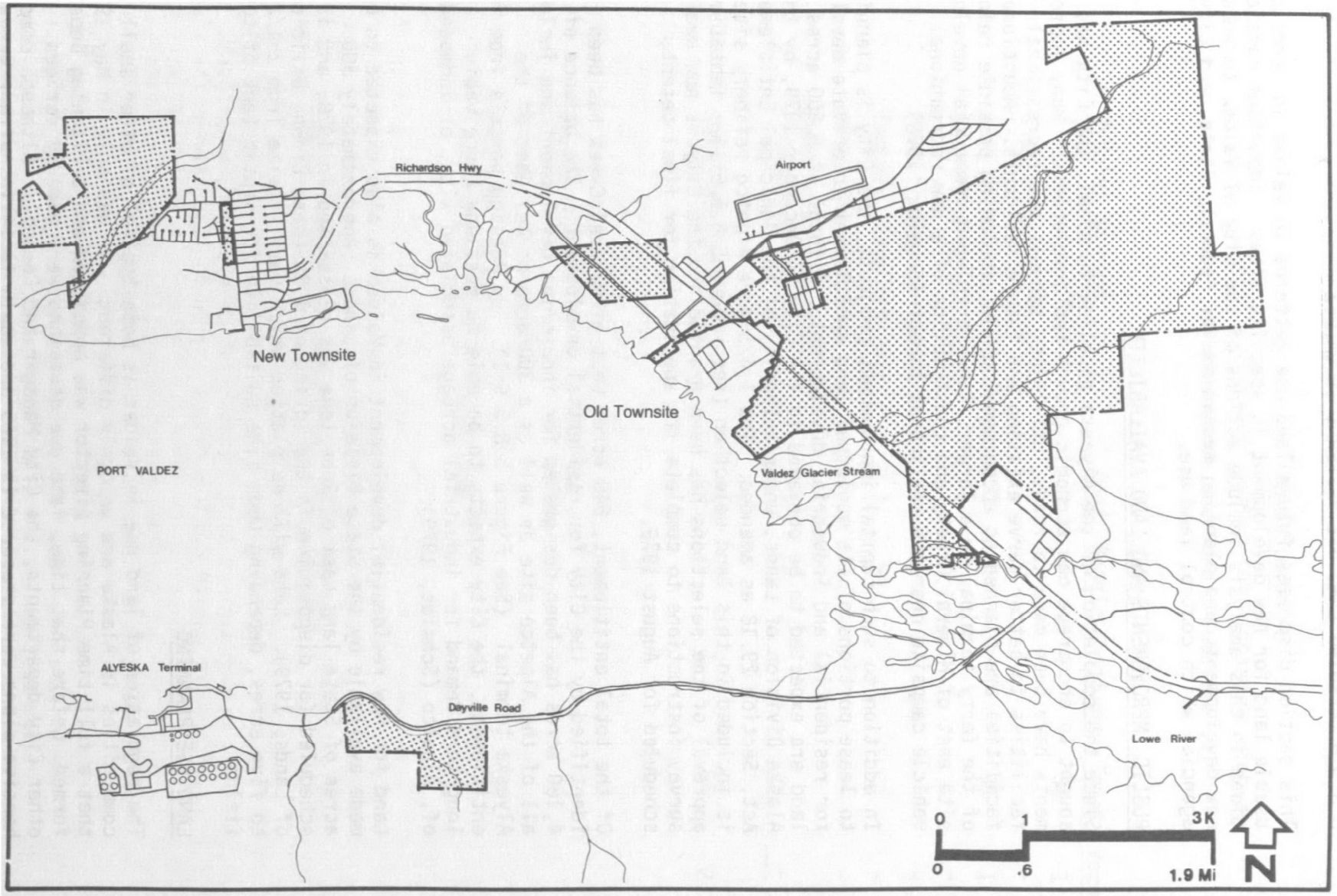

Existing and Proposed City Owned Lands

5.8.5.6-1

for implementing them. The plans were made particularly ineffective because of the dramatic changes forced upon the City by the earthquake of 1964 and by the development associated with the tran-Alaska pipeline and terminal in the years 1974-75. The relocation of the town required rapid construction of new roads, utilities, housing, governmental and community services - a process which was still being completed when the pipeline construction began. When the pipeline terminal was built, the City had to expand to meet the needs of a population which more than quadrupled in a year and a half. During the entire 15-year period from the earthquake to the present, the City has had to "catch up" with demand for more permanent housing, utilities, roads and services.

Planning within this period necessarily has focused upon meeting pressing short-term needs. Representatives of the City believe that Valdez has seen the worst of rapid and disruptive growth and that it is now prepared to deal effectively with continued development. However, some administrators and councilmen have noted that the City sometimes violates its own commitments by approval of projects which could be better dealt with under systematic planning (Schmidt, 1979). Such approvals also tend to undermine efforts to complete the long-term plans against which incremental proposals could be evaluated.

Comprehensive Plan

Control of land use in Valdez will be improved when the new comprehensive plan is completed and approved in 1980. The initial public participation phase is complete and planning goals and objectives have been identified. Although the land use plan which will emerge from the comprehensive planning process will be determined in the months ahead, its basic elements may be outlined at this time (Schmidt, 1979. It is based in part upon the Land Use Plan for 1991 included in the 1971 Comprehensive Plan, and informal decisions by the City regarding use of lands to be conveyed by the State.

The 1971 Comprehensive Plan called for new development in three general areas:

1. Area west of New Valdez. Single-family residential development was projected west of Hazelet Street to and across Mineral Creek. Shopping, school and park facilities were also included to support the new population. Bridges at the extension of Hanagita and Egan Streets were proposed to serve the single- and multi-family neighborhood west of the creek.

2. Old Valdez/airport area. Industrial development was proposed within the entire 2,000 acres of low-lying land between the tidal flats and Mineral Creek, with the exception of the diked area of old Valdez and coastal areas to the east. The lod townsite was designated as a "danger area - not developable in the 1971 plan."

3. The vicinity of Robe Lake. A new neighborhood larger than the combined area of new Valdez and area No. 1 above was designated at the east and west ends of Robe Lake. Portions of what is now the proposed Alpetco site were designated for single- and multi-family residential and recreational uses. Because of its isolation

from new Valdez, shopping and convenience centers were also located in this area.

The City's plans for the first two areas remain largely intact, although the actual configuration of proposed roads and developable areas has changed. The townsite is recognized as having flooding and geologic limitations which would always preclude residential development, but would not necessarily prevent warehousing and other forms of industrial development. The satellite development projected for Area 3 is now seen as limited by flooding and terrain features, the potential for environmental impacts on the lake, land ownership limitations and the proposed Alpetco development. The State plans disposition of 300 acres of land for residential development east of the lake, but none of the land has lake frontage.

For purposes of the new comprehensive plan, no population projections have yet been made. Because the Alpetco project is so significant in terms of population growth and land use, the City expects to rely upon data from this environmental impact assessment in completing its comprehensive plan.

District Coastal Management Program

The Valdez Coastal Management Program will be an important element of the Comprehensive Plan. The purpose of the plan is to provide for the orderly, balanced utilization and protection of coastal resources, and sound economic development along coastal areas. According to statutory requirements of the Alaska Coastal Management Act of 1977, as amended (Chp. 84, Sec. 46.35.030),the final plan will include:

1. A delineation of the boundaries of the coastal areas subject to the District Coastal Management Program. The State has defined the zone of "indirect influence" of coastal actions as the 1,500 -foot contour elevation, or essentially all developable land in Valdez. Its eastern limits along the Richardson Highway have not yet been established;

2. A statement of uses subject to the program;

3. A statement of policies to be applied to the management of land and water uses;

4. Regulations as appropriate to govern land and water use under the program;

5. Description of "proper" and "improper" uses subject to the program;

6. Summary of policies which will be applied to determine whether proposed land or water uses will be allowed; and

7. Policies applied to areas designated for special attention.

A Phase I draft of the plan has been prepared by the City and has been reviewed by the Alaska Department of Community and Regional Affairs (ADCRA) - the agency which dispersed Federal Coastal Zone Management funds for the study. The draft contains a resource inventory and

statement of goals and objectives regarding the use of coastal resources. A component which was not included in the draft is a discussion of geophysical hazards to development. Geophysical hazards may present some limitations to construction in at the old townsite where damage from the 1964 earthquake was most severe.

The statutory date for completion of the Coastal Management Program is December 1979 (SB 145). However, the City will likely petition DCRA for an extension, depending on funding availability (Schmidt, 1979).

Until the District Coastal Management Plan is completed and approved, development proposals such as the Alpetco project will be subject to compliance with the State Coastal Management Program. Project proposals are submitted to the Office of Coastal Management within the Governor's Division of Policy Development and Planning, which acts as a clearinghouse for review of various aspects of the proposal by appropriate State departments. Projects are reviewed for consistency with requirements of the U.S. Coastal Zone Management Act and the State's 1977 Coastal Zone Management Plan. The separate components or phases of a large project such as the Alpetco petrochemical complex will be reviewed on a sequential basis throughout the full development period.

Flood Hazard Areas

An important consideration in land use planning for Valdez is the potential for serious flooding in such areas as the old townsite, the airport, and the Robe River Subdivision. These areas are situated on the deltas formed by the Valdez Glacier Stream and the Lowe River, which make up the entire eastern end of Port Valdez.

A study conducted for the U.S. Department of Housing and Urban Development Federal Insurance Administration (FIA) (Flood Insurance Study, City of Valdez, Alaska, 1976) in 1978 identified four types of flood hazard in Valdez. The first is periodic glacial melt flooding which has been partially controlled by the construction of dikes. The second is the hazard of tsunami wave run-up. The third type could occur in coastal areas from tidal and storm surges. The fourth is the potential hazard from outburst floods from glacier-dammed lakes. The study was based on a review of published data and was confined to an analysis of glacial melt, snow melt and rainfall, and glacier-outburst flooding potentials for the 10-, 50-, 100-, and 500-year floods on Lowe River, Valdez Glacier Stream, Robe River, and an unnamed creek. Only the 100-year flood boundaries were delineated.

From the analysis, flood zones were delineated representing the base elevation of flood waters for a hypothetical 100-year flood (See Figure 5.8.5.6-2, Flood Hazard Areas). The map shows the potential for severe flooding over the entire low-lying area of eastern Valdez. Peak elevations are higher upstream where channel widths are narrower. Barriers such as the 240-ft. long Richardson Highway Bridge across Valdez Glacier Stream also act to increase flood heights upstream and in adjacent areas.

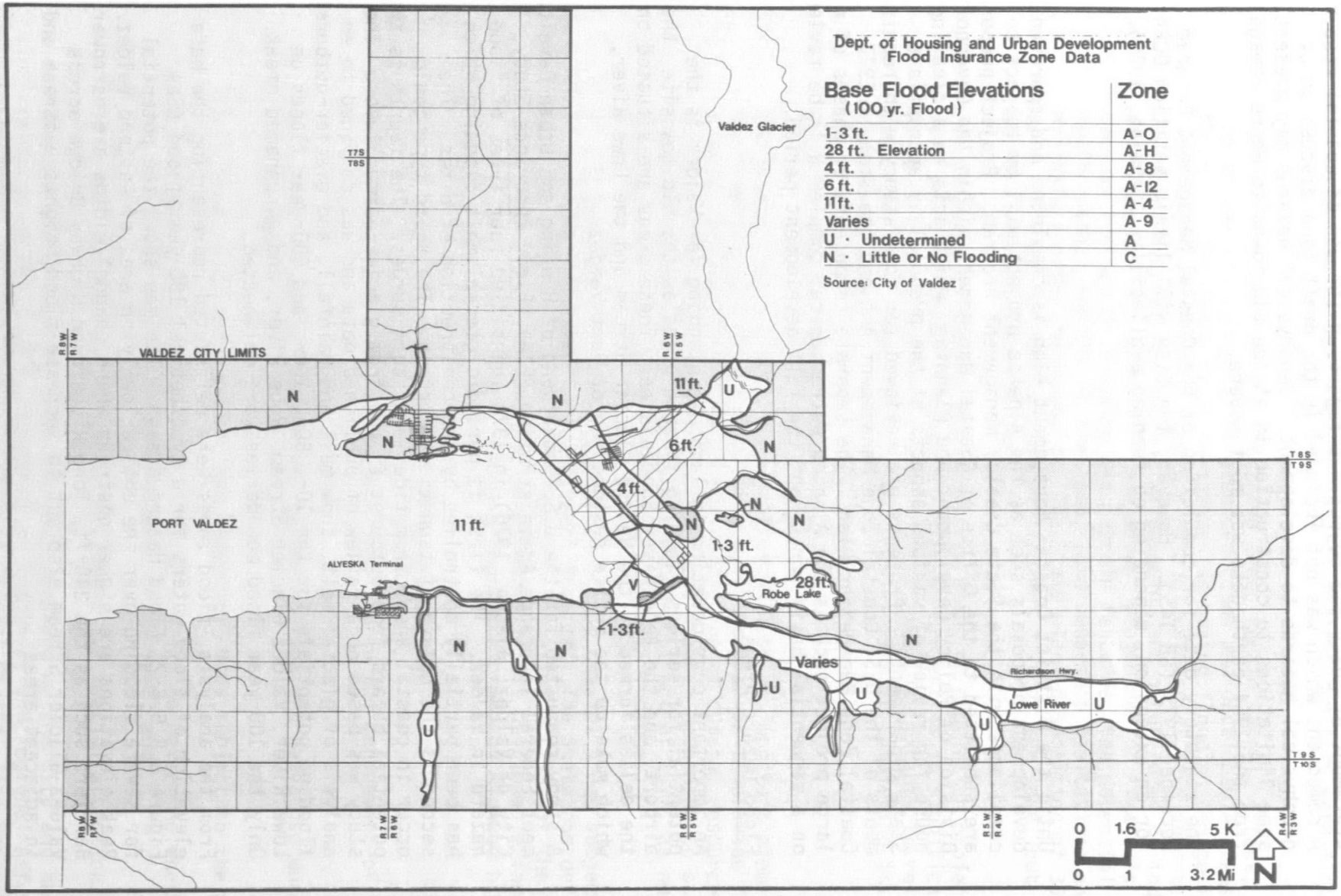

Flood Hazard Areas

5.8.5.6-2

Maps from the FIA study form the basis for the administration of the National Flood Insurance Act of 1968 and the Flood Disaster Protection Act of 1973. The flood analysis program was established to allow property owners to buy flood insurance at rates subsidized by the Federal Government. In return, communities must carry out local floodplain management measures to protect lives and new construction from flooding. The community must use flood elevations shown on the map as the minimum building elevation for new construction. Private insurance agents establish premium rates on the basis of flood risk, identified on the map as letter zones corresponding to flood elevations.

Valdez is in the first or "emergency" phase of the program. Subsidized insurance rates are available during this phase regardless of their insurance risk. Rates for existing structures in a floodprone area are lowered to about 10% of the actuarial or real risk rates. New construction is elegible for insurance only at unsubsidized rates (Platt, Rutherford, "The National Flood Insurance Program; Some Mid-Stream Perspectives," AIP Journal, July 1976). Under the "regular" program, to become effective March 27, 1980 (Carl Cook, HUD Administrator, Region X, Seattle), premiums will vary according to exposure to flood damage, and new buildings must be elevated or floodproofed.

The National Flood Insurance Program (NFIP) essentially compels communities to enter the program. By law, no federal-related assistance is available in floodprone areas if a community does not enter the program and upgrade its local building standards to qualify for the regular program (U.S. Department of Housing and Urban Development, Questions and Answers, National Flood Insurance Program, May 1979). Federal assistance includes mortgage backing (FHA Mortgage Insurance, VA Mortgage Guarantees, etc.), direct loan, or any other taxpayer funds including disaster relief. In other words, any development in floodprone areas to which the Federal Government is in any way a party or guarantor must proceed under NFIP rules or not at all.

The City has reviewed the Flood Insurance Rate Maps (FIRMs) prepared for the HUD study and believe that they are overly conservative. Particular disagreement lies with assumptions used in the study regarding the severity of potential outburst flooding. A consultant has been retained by the City and a preliminary analysis suggests that glacier -dammed lakes in the vicinity probably do not contain nearly as much water as was assumed in the FIA study. The consultants believe that a more exhaustive analysis of this and other factors will likely reduce the base flood elevations from the levels established in the FIA study.

Provisions of the Flood Insurance Act allow for revisions to FIRMs when warranted. Plans are to complete the new consultant's study by midsummer of 1980. In order to make changes to the maps before they become effective on March 27, 1980, the City might attempt to complete analyses of critical areas for HUD review before that time. If no changes are made before that deadline, the City will have to require building at or above the flood levels identified on Figure 5.8.5.6-2, or risk loss of any Federal funding. Such delays could in turn cause loss of the construction season for housing and industrial development in eastern Valdez.

By constructing its dike along Valdez Glacier Stream as planned, the Alpetco facility should avoid any of the potential problems of compliance with the FIA study (see Sec. 6.2.1). Such a dike would, however, encroach upon the floodplain, and potentially divert or increase flood waters on the west side of the stream. The amount of this flooding or its impact on land use cannot now be determined. The FIA floodplain regulations allow for periodic updating of the FIRMs where such improvements have likely modified the extent of flooding. The assessments are usually made at five-year intervals unless warranted more frequently by intensive development.

In summary, the potential for significant flooding has clear implications for land use in Valdez. If projected flood elevations are high enough to make building construction impractical, areas may have to be diked or new construction restricted. Where projected flood elevations are not excessive, buildings will have to be floodproofed or elevated, affecting cost and development feasibility.

Zoning

Like the 1971 Comprehensive Plan on which it was based, zoning regulations have not effectively guided land use in Valdez. During the pipeline era, ordinance requirements for housing frequently were ignored to meet pressing needs. Trailers and mobile homes were allowed throughout the City on land zoned for single-family permanent dwellings. Tolerating exemptions to codes in order to provide for the temporary needs of residents became an unwritten policy of the City (Baring-Gould, Michael and Bennett, Marsha, Social Impact of the Trans-Alaska Pipeline Construction in Valdez, Alaska 1974-1975, 1976). Because the present zoning ordinance is difficult to administer, a new ordinance is being drafted by a consultant to the City. It is expected to be adopted by June 1980. A new Subdivision Ordinance is also planned. Improvements which will expedite conditional use applications, and increase densities in residentially zoned areas are among the objectives for the new Zoning Ordinance.

Some changes suggested by the new ordinance would approve uses which are now in violation of the existing ordinance. For example, the present Agricultural Zone of 5-acre lots served by domestic sewer and water systems in Alpine Woods Subdivision is being replaced with a Suburban Residential District of 1-acre lots. This new zone reflects the actual size of lots presently developed under the Agricultural Zone.

Other changes suggested in the new ordinance could serve to increase overall residential building densities. Within the RA Residential Zone which now predominates in the new townsite and in Robe River Subdivision, duplex units as well as single-family lots would be allowed. Townhouse developments would also be allowed as conditional uses in the RA Zone, which could have the effect of increasing both densities and the overall numbers of units. The plan to allow higher density development is a response to the limited availability of land for residential development and the public cost of providing utilities to isolated or low-density subdivisions. However, residents frequently cite crowding and high-density living as an undesirable by-product of Valdez growth (Baring-Gould and Bennett, op. cit., p. 37).

There are other adjustments which could reduce the number of housing units from those allowed on the existing Zoning Map (see Figure 5.8.5.6-3). The long hill extending along the waterfront between Hazelet Street and Mineral Creekis designated RA, but according to the Planning Director, its steepness would probably require development at a density no greater than one unit per acre. The Zook Subdivision located northwest of the old townsite is zoned Commercial Residential, a zone which has been dropped from the new ordinance. The Planning Director anticipates that housing in this area, some of which predates the earthquake, will gradually be replaced with commercial services supporting industrial development in Old Valdez.

The Zoning Ordinance is expected to become effective in July 1980. Anticipated revisions to the draft include a response to floodplain problems raised by the FIA Study and possible changes to accommodate the Alpetco project and other similar industrial projects.

There are no specific flood plain provisions in the draft ordinance. When the final Flood Insurance Rate Maps are approved, the City will have to develop specific policies for development within floodprone areas. Most low lying land with the highest flooding potential is presently zoned -and likely to remain zoned - for industrial use. The probable effect of floodplain zoning on industrial development potential will be to either restrict development in such areas or to increase the cost of site preparation and building construction.

SUMMARIZATION OF LAND USE TRENDS

From the preceding review of public and private development trends and regulatory issues, it can be seen that development areas can be generally defined but the time frame within which development might occur is more speculative. Efforts are being made to set aside large areas of land for residential and industrial development, in anticipation of a demand which has not yet been demonstrated. For example, much of the industrially zoned land in the vicinity of the old townsite might go undeveloped for years, or the City's proposed new port might encourage some new development. Similarly, expansion of land for housing in the area west of Mineral Creek is seen as a way of accommodating a speculatively larger population.

Thus, the actual size, location or pace of development in the City is subject to a number of variables. Decisions for locating industry in the City will depend upon considerations which might be only partially influenced by what the City does. Other variables include the final resolution of boundaries and elevations of the projected 100-year flood, and various other local, state and federal permits for construction of the specific facilities.

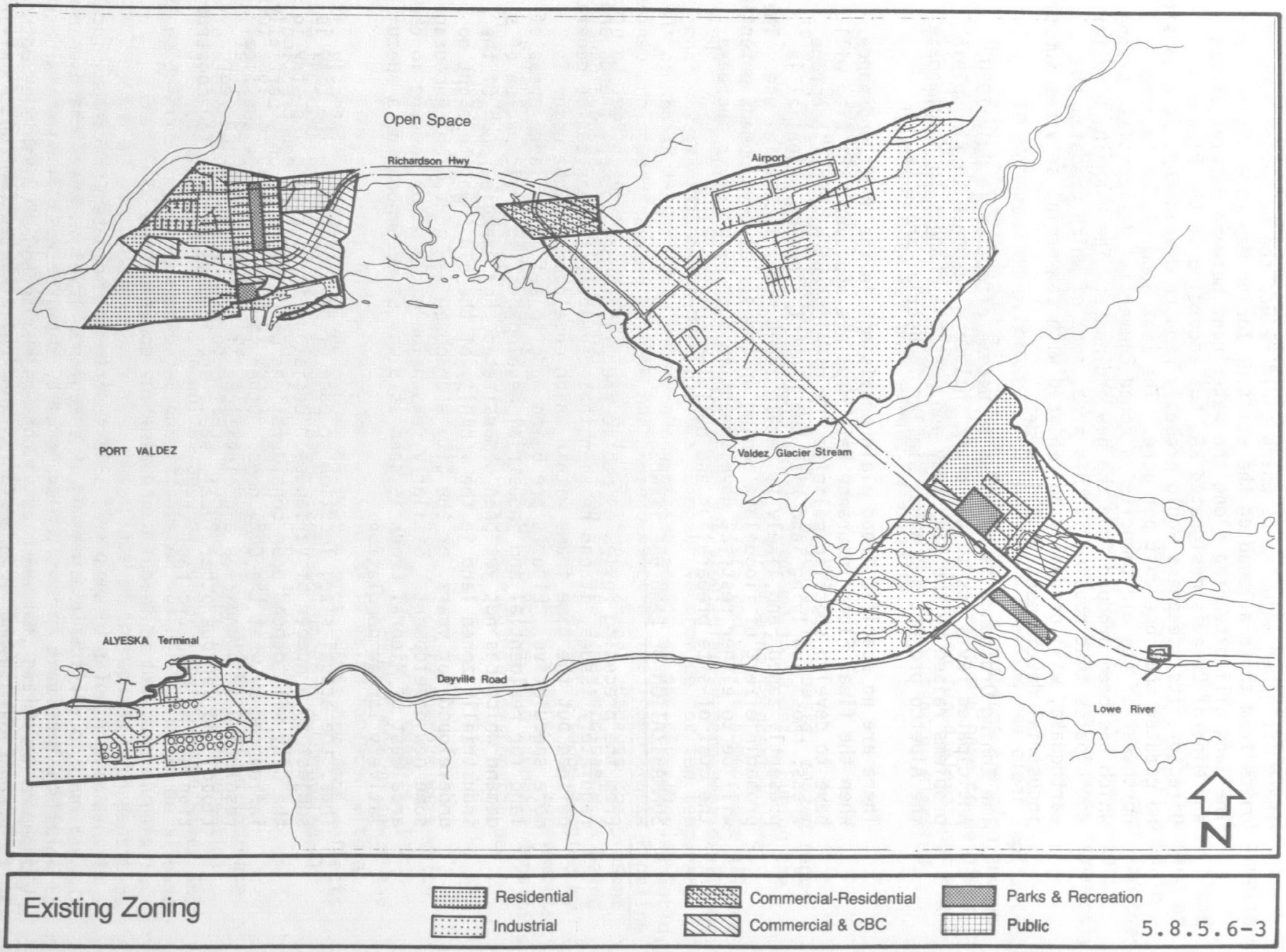
Open Space
Richardson Hwy
Airport
PORT VALDEZ
Valdez Glacier Stream
ALYESKA Terminal
Dayville Road
Lowe River
N
Existing Zoning
Residential
Industrial
Commercial-Residential
Commercial & CBC
Parks & Recreation
Public
5.8.5.6-3

5.8.6 TRANSPORTATION SYSTEMS

5.8.6.1 LAND

HIGHWAY SYSTEM

The Richardson Highway provides the only overland transportation access to Valdez. Beginning in Valdez, the highway runs primarily north, terminating at Fairbanks. About 15 miles east of Valdez, the highway runs through the narrow Keystone Canyon and then rises over the Thompson Pass up to an elevation of about 2,900 feet. At Glennallen, the Richardson Highway connects with the Glenn Highway, providing access to Anchorage. North of Gulkana at mile 130, it connects with the Tok cut-off which leads to the Alaska Highway. Travel distances from Valdez via the highways are 120 miles to Glennallen, 305 miles to Anchorage, 365 miles to Fairbanks, and 258 miles to Tok.

The Richardson is a paved two-lane highway. The newer upgraded sections reflect current design standards of 24-foot pavement width (two traffic lanes) with eight-foot shoulders, for a total width of 40 feet. Other, older sections sometimes have no shoulders and a pavement width of 20-24 feet.

The Richardson Highway also comprises the principal element of the local Valdez highway system, providing a transportation spine from the Lowe River estuary along the northern side of Port Valdez to the new townsite at Mineral Creek. The highway passes through the center of the town and continues about a half mile to the waterfront to provide access to the city dock facility and the Alaska Marine Highway berths.

With the exception of local roads serving the new Valdez townsite, there are few other roads in the area. Between the new townsite and the Valdez Scalehouse, the only intersections of the Richardson with paved roads are: Mineral Creek Loop Road, Airport Road, and the Dayville Road.

TRAFFIC VOLUMES

Traffic volumes on the Richardson Highway have been consistently rising over the last two decades. Recent years have witnessed abnormal and severe fluctuations in traffic levels due to pipeline construction activity. While regional volumes seem to have returned to close to pre-pipeline levels, local Valdez traffic volumes have leveled off at 1976 levels (Alaska Highway Annual Traffic Volume Report, 1977, State of Alaska, Department of Transportation and Public Facilities). This is principally due to the significantly increased resident population that has remained in Valdez since pipeline construction.

Table 5.8.6.1-1 summarizes 1978 traffic volume data for various locations, both in the Valdez area and at a regional level on the Richardson Highway. In Valdez itself, average daily traffic (ADT) along the Richardson varies from 4,300 vehicles at the Scalehouse to 5,200 vehicles both at the Department of Transportation and Public Facilities (DOTPF) offices and also in central Valdez, between Meals Road and Hazelet Avenue.

TABLE 5.8.6.1-1

1978 TRAFFIC VOLUMES - VALDEZ LOCAL AND REGIONAL[1]

Location	Average Daily Traffic (ADT)	Peak-Hr.[2] Volume (All Vehicles	% Trucks	Average Trucks Per Day
Mile Point 1.0 Valdez Maintenance Station (DOTPF)	5,225	370	12.5	655
Mile Point 3.0 West of Airport Intersection	4,540	340[3]	12.5	570
Mile Point 7.0 Valdez Scalehouse (East of Dayville Road)	4,325	325[3]	18.0	780
Dayville Road (500' west of Richardson Highway)	1,925	144[3]	18.0	345
Mile Point 17.0 Southwest of Keystone Canyon	1,600	120[3]	18.0	290
Mile Point 67.0 Ernestine Maintenance Camp	495	38	18.0	90
Mile Point 115.0[4] Tazlina Bridge	1,342	100	NA	200-270[5]
Mile Point 123.0[4] Gulkana Airfield Access Rd.	650	50	NA	100-130[5]

(1) Sources: Herman E. Londagin, Regional Traffic and Utilities Engineer, State of Alaska, Department of Transportation and Public Facilities, Valdez; and Alaska Highways Annual Traffic Volume Report, 1977, State of Alaska DOTPF.
(2) Peak hour generally occurs between 3-5 p.m.
(3) Assumes peak hour 7.5% of ADT - based on peak-hour ratios observed at Mile Points 1.0 and 67.0.
(4) 1977 Data.
(5) Estimated trucks assuming percentage range of 15-20% trucks in general traffic stream.
NA Not Available.

Regionally, volumes decline to low levels along the Richardson away from Valdez. At Keystone Canyon the ADT in 1978 was 1,600 vehicles, and at Ernestine about 500 vehicles a day. Truck percentages range from 12.5 percent close to central Valdez, to 18 percent beyond Dayville Road and eastward.

The average two-way peak-hour traffic volumes are also shown in Table 5.8.6.1-1 and range from 325-370 vehicles per hour in Valdez to about 40-100 vehicles per hour at various locations beyond the Ernestine Maintenance Station.

The capacity of a highway is determined by the interaction of numerous factors. Under ideal conditions of uninterrupted flow, the capacity of a two-lane, two-way road would be about 2,000 passenger vehicles per hour. However, as many highway conditions are less than ideal, capacities are generally below this figure. Principal factors affecting capacity are: driver sight distance, the proportion of trucks in the traffic stream, lane and should widths, and road grades. A greater number of trucks, narrower lanes, and restricted sight distances will all serve to reduce the number of vehicles able to pass any given point during a given time period. Therefore, no single capacity figure can be attached to a highway. Rather the capacity will vary from section to section dependent on the roadway conditions outlined above. The relationship between traffic volumes and road capacity is usually expressed in terms of levels of service, classified as A through F, and described as follows (Highway Capacity Manual, Special Report 87, Highway Research Board, 1965):

> Level of service A describes a condition of free flow, with low volumes and high speeds, with speeds controlled by driver desires, speed limits, and physical roadway conditions.
>
> Level of service B is in the zone of stable flow, with operating speeds beginning to be restricted somewhat by traffic conditions. Drivers still have reasonable freedom to select their speed and lane of operation. The lower limit of this level of service has been associated with service volumes used in the design of rural highways.
>
> Level of service C is still in the zone of stable flow, but speeds and maneuverability are more closely controlled by the higher volumes. Most of the drivers are restricted in their freedom to select their own speed, change lanes, or pass. A relatively satisfactory operating speed is still obtained, with service volumes perhaps suitable for urban design practice.
>
> Level of service D approaches unstable flow, with tolerable operating speeds being maintained though considerably affected by changes in operating conditions. Fluctuations in volume and temporary restrictions to flow may cause substantial drops in operating speeds. Drivers have little freedom to maneuver, and comfort and convenience are low, but conditions can be tolerated for short periods of time.

Level of service E cannot be described by speed alone, but represents operations at even lower operating speeds than in level D, with volumes at or near the capacity of the highway. At capacity, speeds are typically, but not always, in the neighborhood of 30 mph. Flow is unstable, and there may be stoppages of momentary duration.

Level of service F describes forced flow operation at low speeds, where volumes are below capacity. These conditions usually result from queues of vehicles backing up from a restriction downstream. The section under study will be serving as a shortage area during parts or all of the peak hour. Speeds are reduced substantially and stoppages may occur for short or long periods of time because of the downstream congestion. In the extreme, both speed and volume can drop to zero.

In the Valdez area, the absolute capacity of the Richardson Highway is estimated at about 1,700 vehicles per hour in both directions. Current average daily peak-hour traffic volumes are 300-370 vehicles, and represent level-of-service conditions A to B. On the Richardson outside of Valdez, and on to Glennallen, the capacity of many sections of the highway is considerably below that of the Valdez section. As traffic volumes are also considerably lower, however, level of service A to B is probably maintained over much of the route.

TRUCKS

The average percentage of trucks in the overall traffic stream on the Richardson Highway ranges from 12.5 percent at the Valdez DOTPF offices to 18 percent on the Richardson Highway beyond the Valdez Scalehouse. During the peak of pipeline construction activity in 1976, the truck proportion reached 23.5 percent at the Ernestine Maintenance Station.

In terms of actual truck movements along the Richardson Highway, based on 1978 extimates, an average of 655 trucks a day pass the Valdez Maintenance Station, and about 780 trucks a day pass the Valdez Scalehouse. Farther out on the Richardson Highway, in keeping with the lower general traffic volumes, an average of 90 trucks a day pass the Ernestine Maintenance Station. Table 5.8.6.1-2 summarizes truck traffic characteristics recorded at the Valdez Scalehouse in recent years. Since 1972, both the average gross vehicle weight and the net vehicle weight of loaded trucks have remained relatively constant, averaging about 60,000 lbs. and 30,000 lbs. respectively.

Also shown in Table 5.8.6.1-2 is the percentage breakdown of trucks by axle group. Although in 1977 about 20 percent of trucks were of four or fewer axles, almost 50 percent were of six or more axles.

Truck weight limitations on State highways, specified by the State of Alaska and controlled by the Department of Transportation and Public Facilities, Maintenance Division, are based on three factors: maximum gross vehicle weights, maximum axle weights, and maximum tire loadings (Alaska Oversize and Overweight Permit Movements. State of Alaska, Department of Highways, Maintenance Division, May 1973). The allowable gross vehicle weight is determined by the most critical of the three elements.

TABLE 5.8.6.1-2

TRUCK TRAFFIC CHARACTERISTICS - VALDEZ SCALEHOUSE(1)

Year	Average Gross Vehicle Wt.(2)	Average Net Vehicle Wt.(2)	% Breakdown of Trucks by Axle Group				
			2 Axles	3 Axles	4 Axles	5 Axles	6+ Axles
1972	62,000 lbs.	33,000 lbs.	18%	9%	1%	40%	32%
1973	55,000 lbs.	29,000 lbs.	28%	9%	1%	37%	25%
1974	51,000 lbs.	24,000 lbs.	19%	19%	1%	44%	17%
1975	62,000 lbs.	30,000 lbs.	2%	11%	2%	57%	28%
1976	64,000 lbs.	32,000 lbs.	2%	12%	1%	47%	38%
1977	64,000 lbs.	33,000 lbs.	6%	12%	2%	32%	47%

(1) Source: Alaska Highways Annual Traffic Volume Report, 1977, State of Alaska Department of Transportation and Public Facilities.
(2) Data for loaded trucks only.

If the weight of the gross vehicle, any axle or axle group, or tire loading is in excess of those prescribed, a permit is required for vehicle operation.

During the spring, when roads are most susceptible to damage due to freeze-thaw conditions, additional weight restrictions may be applied locally. On the Richardson Highway in the Valdez area, legal maximum axle loads are reduced to 75 percent of the normal allowances during this period (generally April-May), and for short periods of severe conditions to 50 percent of the normal allowances. During this same period permits for overloads in excess of legal limits are not issued except in extreme emergency cases.

FUTURE HIGHWAY CONDITIONS

Considerable improvements are planned for the Richardson Highway over the next five to six years, to improve both safety and roadway capacity.

Altogether, about 80 miles of roadway will be upgraded or reconstructed over the 200 miles between Valdez and the Denali Highway. Approximately 25 percent of these improvements will occur within 30 miles of Valdez and about 50 percent within 90 miles of Valdez (up to the Tonsina-Copper Center area).

The key improvement project closest to Valdez will be the Keystone Tunnel By-Pass which will divert the road from the existing narrow tunnel and sharp curves at the north end of the canyon.

The proposed Copper River Highway, linking Cordova to the Richardson Highway between the Thompson Pass and Tonsina is currently undergoing official review. As a six- to seven-year construction period has been estimated for the full facility, it is unlikely that the highway, if approved, would be in operation before 1988, well after full implementation of the Alpetco facility.

By 1985, when the Alpetco project would be in full operation, regional traffic volumes on the Richardson Highway north of Valdez without the project will probably be almost double current levels (assumes regional traffic volumes, e.g. at Ernestine Maintenance Camp, will continue to increase at average pre-pipeline levels of 10 percent per annum (Alaska Highways Annual Traffic Volume Report, 1977, State of Alaska, Department of Transportation and Public Facilities). This would increase the average daily traffic at Ernestine, for example, from 495 to 975 vehicles with corresponding increases in peak-hour traffic volumes.

In Valdez itself, the regional traffic growth on the Richardson corresponds to a smaller percentage (about 1-2 percent) due to the far higher general traffic volumes. In addition, however, the population of Valdez, excluding the influence of the Alpetco project, is expected to increase by 1 percent per year on average (see Section 5.8.1 Population Characteristics), and it is estimated that the planned new Valdez city dock could generate an additional 1-2 percent traffic per annum (Based on usage projections in: Port of Valdez Market Penetration Study, Alaska Consultants, Inc., Harbridge House, Inc.; prepared for City of Valdez, 1978).

Overall, it may be expected that traffic volumes in Valdez will increase by about 3-5 percent per year up to 1985. Average daily traffic on the Richardson would, thus, increase from 5,225 vehicles to 7,325 vehicles at the Transportation offices, and from 4,235 to 6,050 at the Valdez Scalehouse. Levels of service on this section of the Richardson would remain A to B, the same as the present level.

5.8.6.2 AIR

AIRPORT FACILITIES

The Valdez Airport is located approximately four miles east of the present Valdez townsite, to the north of the old townsite and the Richardson Highway. The airport is owned and maintained by the Alaska Department of Transportation and Public Facilities, which leases out the recently constructed terminal building to private enterprises.

The configuration and operation of the airport is largely constrained by the local geography. Airport layout comprises a single 5,000-foot runway in an east-west orientation, with three taxiways connecting to a parallel large apron area. Steep mountains to the north and east of the airport result in the most common flight approach being from the west, over the Valdez Narrows and the water body of Port Valdez.

The lack of runway lighting restricts operations to daylight hours, a more severe restriction in winter, due to the short days, than in summer.

The airport also lacks any approach instrumentation system, necessitating all aircraft approaches to be made under visual flight rules (VFR). Low cloud ceilings, therefore, also can restrict airport activity at times. The largest craft the runway can accommodate is a Boeing 727 jet.

The current (1978) annual total operations of just under 20,000 indicates that Valdez Airport is operating considerably below its estimated capacity of 100,000-200,000 per year.* Table 5.8.6.2-1 summarizes total airport movements over the last four years, and indicates both the seasonal variation of airport operations and the historical fluctuations caused by the pipeline construction. Airport operations doubled between 1975 and 1977 to a peak of 28,000 per year. During the last four years, about 70 percent of all annual airport movements have occurred between April and September.

TABLE 5.8.6.2-1

VALDEZ AIRPORT OPERATIONS 1975-1979

(Number of Takeoffs and Landings)

Year	Jan.-Mar.	Apr.-June	July-Sept.	Oct.-Dec.	Total Annual
1975	1,379	3,723	6,060	3,159	14,321
1976	2,585	9,265	9,598	4,953	26,401
1977	4,410	9,415	9,916	4,248	27,989
1978	3,574	5,240	7,177	3,478	19,469
1979	3,130				

Source: Federal Aviation Administration, Valdez.

AIR PASSENGER SERVICES

Valdez is currently served by three air carriers on a regular basis. Two of these, Polar Airlines and Alaska Aeronautical Industrial (AAI), offer scheduled services, while Valdez Airlines (formerly Kennedy Air Service) operates to Valdez as an air taxi charter service. The principal carrier is Polar Airlines. The vast majority of air passenger traffic into and out of Valdez originates or is destined for Anchorage.

*The Prince William Sound Regional Transportation Study indicates that for a simple runway which does not serve a significant portion of larger jets, the FAA has estimated a "practical annual capacity" of about 215,000 operations (takeoff or landing). Considering local weather and daylight conditions, the capacity of the Valdez Airport would be lower than this figure and would be between about 100,000 and 200,000 operations a year.

Polar Airlines in summer 1979 operates about 33 round trips per week (average five-six per day) between Valdez and Merrill Field in Anchorage. Valdez Airlines, providing air charter services only, averages about three-four trips a day (20-25 per week) between Anchorage International Airport and Valdez. AAI provides seven round trips per week, an average of one a day, between Valdez and Anchorage International, by way of Cordova. The majority of these services utilize nine-ten seat aircraft.

While overall passenger data is incomplete, the best estimates indicate current total movement through the Valdez Airport on the three main carriers to approximate 28,000 passengers per year.

Available data (Data submitted by Polar Airlines to Alaska Transportation Commission, March 1979) for the major carrier indicate flights operating at about 55 percent of seat capacity for the winter period, and about 60 percent of capacity for the summer period. The same data show that during the last 12 months, about 85 percent of scheduled flights into and out of Valdez were completed. Weather cancellations were more frequent in winter, only 70 percent of flights being completed on average, while during the summer months about 95 percent completion was attained.

Air freight movements into and out of Valdez are generally low, with Anchorage being the principal origin point. Air freight data for recent years is incomplete, though past trends and the data that is available indicate that annual air freight through Valdez probably is between 200 and 500 tons. This reflects a low demand rather than restrictive capacity for air freight. The vast majority of the freight is carried on scheduled flights. Average freight loads for Polar Airlines between mid-1978 and mid-1979 varied between 60 and 100 lbs. per flight.

FUTURE CONDITIONS

Late in the summer of 1979, the airport is scheduled to be equipped with a DME-VOR landing instrument system.* Other improvements scheduled for implementation during the summer of 1980 include a runway extension from 5,000 to 6,500 feet, the installation of a runway lighting system, and the complete resurfacing of the runway, taxiways, and apron area.

The planned runway lighting might lead to Federal Aviation Administration certification for night landing. The planned landing instrument system will not provide for all weather operations, because the mountains are too close to allow recovery from a missed approach, but is estimated to reduce the level of cancelled flights by 60-70 percent.

Past fluctuations in passenger volumes make the projection of future air service levels into Valdez a speculative exercise. Demand for

*This equipment sends out an Azimuth course enabling approaching aircraft to fly directly toward the transmitting station, and also provides altitude step down information for aircraft descending to the airport.

air services is still falling from the pipeline construction peaks, though the airport improvements will improve the service reliability of the air carriers, and as such may provide a stimulant to increased demand.

The airport facilities do not present significant restrictions to future increases in service, and the air carriers have previously proved their ability to serve substantial demand increases as they occur. Increases in demand for air travel are likely to be moderate, however, surplus capacity exists in the current air services schedule that would be able to absorb increased demand of about 50 percent.

5.8.6.3 MARINE

ALASKA MARINE HIGHWAY SYSTEM

EXISTING SERVICE AND CONDITIONS

Valdez is one of five cities served by the Alaska Marine Highway System. This system provides ferry service to Whittier, Valdez, Cordova, Seward, and Ellamar within the Prince William Sound area. The system is operated by the State of Alaska Department of Transportation and Public Facilities and has been in existence since 1949.

All routes serving the Prince William Sound area are part of the Southwestern Marine Highway System, which also includes the Kenai Peninsula and Kodiak. Passenger traffic on the Southwest Marine Highway System has increased from approximately 8,000 riders per year in 1965 to more than 44,000 in 1976.

The Southewestern Marine Highway System is operated with two vessels. The MV Bartlett has a capacity of 170 passengers and 38 standard passenger vehicles. The MV Tustumena has a capacity of 200 passengers and 54 standard passenger vehicles. In Valdez, the Tustumena utilizes the city dock loading facilities, while the Bartlett uses the Marine Highway berth to the west of the city dock.

The Southwestern Marine Highway System provides three main services in the Prince William Sound region: a waterborne link between the Sound communities for local residents, freight transportation services to Cordova, and a major tourist transportation facility.

The most frequently served routes in the Prince William Sound area are the Whittier to Valdez, and Valdez to Cordova routes. Seasonal traffic variations are extreme, particularly on the Whittier to Valdez route, which passes the scenic Columbia Glacier. This route is operated by the MV Bartlett, and nearly 75 percent of annual traffic on the Bartlett takes place in the months of June, July and August.

Service is provided five days a week between Valdez and Whittier, from mid-May to late September. No service is provided during other months. At Whittier, a direct train connection for passengers and motor vehicles is available to Portage on the Seward-Anchorage Highway. Passengers without motor vehicles have a six-hour layover for a train connection to Anchorage. The capacity of the railroad is just adequate to meet the peak season capacity of the ferry, with priority on the railroad

given to Marine Highway users and their vehicles. Travel time from Valdez to Anchorage by the combined ferry-railroad mode is about 15 hours, including the six-hour stopover in Whittier. Travel time by ferry, railroad, and highway is about nine hours.

The average volume on the Whittier-Valdez line during 1977 was 64 percent of capacity for passengers and 63 percent of capacity for vehicles. The route carried a total 15,853 passengers and 3,525 vehicles in 1977 (the last year for which data is available). During the peak of the tourist season in July and August, the ferry frequently operates at full capacity. Travel on the ferry in these months is generally by advance reservation only, and the summer tourist rush all but prohibits the use of the ferry by local residents.

The Cordova to Valdez line operates year round. In 1977 a total of 77 trips were operated from Valdez to Cordova, and 104 trips from Cordova to Valdez. During the summer months, the MV Bartlett operates two round trips from Valdez to Cordova each week, while the MV Tustumena makes one Cordova-Valdez round trip per week. Volumes on this line in 1977 were 23 percent of capacity for passengers and 31 percent of capacity for vehicles. The link carried a total of 7,292 passengers and 2,311 vehicles in 1977.

FUTURE CONDITIONS

The passenger and vehicular capacities of the MV Bartlett are already being met during the peak tourist season. Since demand is expected to continue to increase, the maximum vessel capacity for both passengers and vehicles will be reached on an increasing number of trips on the Valdez-Whittier route. The Prince William Sound Regional Transportation Study (PWSRTS) (Prince William Sound Regional Transportation Study; State of Alaska Department of Transportation and Public Facilities, and the Federal Highway Administration, 1978, Unpublished Draft Report) estimated that at current rates of demand increase, the maximum capacities for both passengers and vehicles will be reached on the MV Bartlett between 1980 and 1981 for the Valdez-Whittier route. The State Department of Transportation and Public Facilities currently has no plans to replace the Bartlett with a larger vessel or to add additional vessels to this route. Even replacing the Bartlett with a larger, Tustumena-type vessel is estimated to only increase available capacity to at best 1984 for vehicles and 1988 for passengers.

Much greater excess capacity exists on the Valdez-Cordova route. The PWSRTS estimates capacity on this route being reached between about 1990 and 1995 at current growth levels.

5.8.7 UTILITIES SYSTEMS

The utilities of an urbanized area are important determinants of urban form, the type and density of land uses and the pace and location of community growth. The following section examines the sewer, water, solid waste, power and telephone systems in Valdez, particularly as they affect or restrict residential development.

The basic network of utility systems in Valdez was constructed in 1965 by the Army Corps of Engineers, following the destruction of the old townsite by the Great Alaska Earthquake of 1964. Because of the speed with which the utilities were constructed, compromises in the design and construction of the new utility systems were made. These factors affect the performance of the systems today.

5.8.7.1 SEWER SYSTEM

Most of the present sewer collection system in New Valdez was built in 1965 with an extension constructed in 1967 to serve the industrial area along Meals Avenue and Fidalgo Drive.

To obtain Federal Economic Development Administration participation in the construction of the sewer line extensions, Valdez agreed to install a sewage treatment plant. The City purchased two used treatment plants, each with a capacity of 75,000 gallons per day, which were installed in 1968. These units never operated satisfactorily.

A new sewer plant with a daily capacity of 1.6 million gallons was completed in 1976 and is located in the center of the old townsite. Valdez has primary sewage treatment, using an aerated lagoon system with a polishing pond. At present, there is no sludge disposal, although the Woodward-Clyde (GEZR) solid waste disposal study will address this issue (see Section 6.10.8.3).

The City provides sewer service to all of the new townsite; Valdez airport and the trailer parks adjacent to the airport; and to the Zook Subdivision. Areas served by sewer and water systems are illustrated in Figure 5.8.7.1-1. Robe River Subdivision, Alpine Woods and Nordic subdivisions and housing units located outside of the sewer service area rely on septic tanks. The high groundwater level in certain parts of Valdez causes localized problems of septic tank failure.

As presented in Table 5.8.7.1-1, demand on the sewage treatment plant shows great seasonal variation. Flow records kept from 1977 indicate an average annual output of 750,000 gallons per day. During the summer months when snow melt-off has ceased and rain is less frequent, output drops to between 575,000 - 600,000 gallons per day. During the winter months, however, output increases greatly, ranging between 850,000 - 1,000,000 gallons per day. As is typical of other small communities in Alaska, sewer treatment plant efficiency in Valdez declines during the coldest winter months. Typically, the plant operates at better than 95 percent removal. During the middle of winter, domestic water consumption increases in Valdez as residents, to prevent standing water in their pipes from freezing, keep water running by opening their water taps (Bomhoff, Collie and Klotz, Valdez - A Comprehensive Development Plan, Vol. 2, Comprehensive Development Plan (Anchorage, 1977, p. 14). As a result, effluent becomes far more diluted than during other times of the year. In addition, the lagoons freeze, except around the aerators, thereby impeding bacterial activity in the lagoons. Consequently, plant efficiency declines to slightly better than 85 percent removal. Under the guidelines of the U.S. Environmental Protection Agency, minimum permissible plant efficiency is 85 percent removal.

The design capacity of the sewage plant can be increased by adding more lagoons to the system; for example, doubling the size of the lagoon area would double the capacity of the plant while producing a higher grade of effluent (Homer Alexander, Engineer, City of Valdez). Within the proposed 1982 City budget is a request for funds to construct additional ponds. This budget request for sewer plant capacity is being made irrespective of the Alpetco facility.

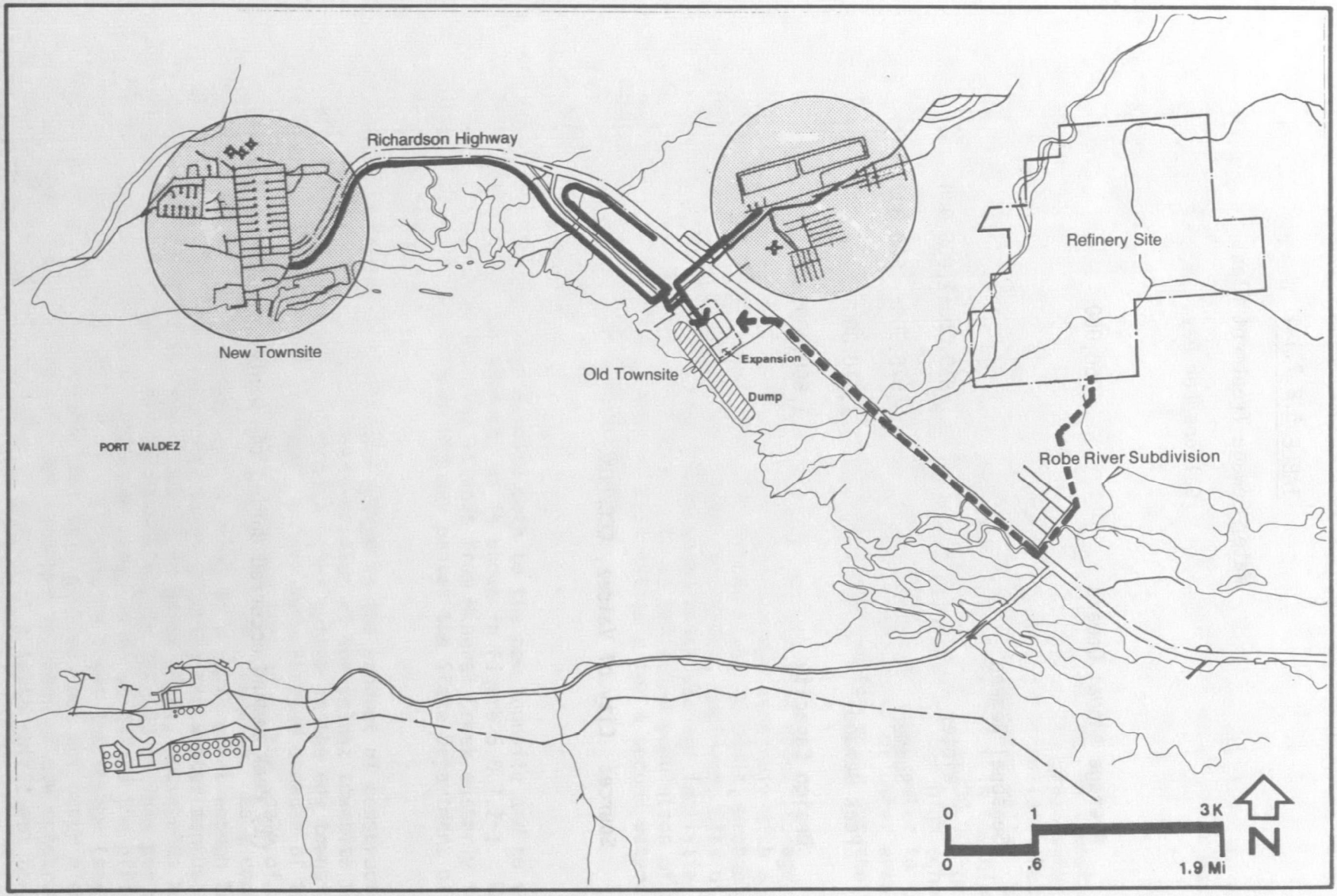

Sewer and Water Systems

Water Wells

Area served by Water System

Proposed Sewer Extension

Sewage Treatment Plant

Existing Sewer Line

5.8.7.1-1

TABLE 5.8.7.1-1

Water Sewage Treatment Plant

Gallons Per Day

Average Annual Demand	750,000
Seasonal Demand	
Winter	850,000-1,000,000
Summer	575,000- 600,000
Peak Demand(1)	1,010,000
Design Capacity	1,600,000

Source: City of Valdez, CCC/HOK.

(1) Peak demand occurred during the winter of 1977.

5.8.7.2 WATER SYSTEM

The water system in Valdez is characterized by the availability of enormous quantities of subsurface water, and by a water distribution system which has significant problems.

WATER SERVICE

Valdez is underlain by an aquifer described as having "an almost unlimited potential."(Bomhoff, op. cit., p. 14.) The groundwater is a soft water of excellent quality requiring only chlorination. Potable water is obtained from a variety of public and domestic wells. Water for the new townsite area is obtained from three wells in the Mineral Creek area. Water from this well field is stored in a 700,000-gallon insulated reservoir, located on a hill northwest of the high school. A fourth city well, located near the airport, provides water to the airport and to the nearby trailer parks. Residents of other areas of Valdez rely on individually drilled and maintained wells for their water requirements.

A priority of the City is to increase its elevated water storage capacity in the new townsite. A second storage reservoir with a capacity of approximately 750,000 gallons might be built, probably adjacent to the present tower (Homer Alexander, Engineer, City of Valdez). With the existing and proposed water storage facilities, Valdez could provide water service to an estimated population of 6,600 persons. No firm time table or cost estimate for a second water storage facility has been proposed.

WATER DISTRIBUTION

The City provides water service both to the new townsite and to the area surrounding the airport, as is shown in Figure 5.8.7.2-1. Water service in the new townsite extends from Mineral Creek easterly to the point where the Richardson Highway passes the State Department of Highways complex.

The present water distribution system is the product of construction compromises that attended the relocation of the Valdez townsite following the 1964 earthquake. The city water system in the new townsite was built in 1965 under conditions that were hurried because of the shortness of the construction season and because of the scale of effort that was required to construct the new townsite. As a consequence, the water lines were not buried at a depth great enough to prevent the service lines from freezing during the winter months. To prevent standing water from freezing in water pipes, households keep their water taps open, wasting approximately 200,000 gallons per day. One consequence of this high water usage is to so dilute the effluent in the sewer system that it is difficult to treat the sewage (see Section 5.8.7.1). To ensure that this problem does not occur elsewhere in Valdez, the building code now requires in areas of new construction that water pipes be insulated or buried at a depth sufficient to prevent freezing.

The city water system in the new townsite area also suffers from an electrolysis problem resulting from flux currents from nearby buried utilities. As a consequence, the water lines are subject to premature corrosion. To correct this difficulty, the City will need to either better ground the utility lines, or to change the utility conduit to a nonconducting material.

Some problems arise in subdivisions that are not served by city water and sewer lines. Because of the small lot sizes as well as the high water table in Robe River Subdivision, for example, some privately maintained wells have been contaminated by nearby septic tanks.

The City has established tentative priorities for improvements to the existing water system. In the next year the City is considering drilling an additional well to serve the airport area and a well to serve Robe River Subdivision. If the City does drill a well at Robe River Subdivision, residences there would no longer rely on individual wells as a source of water, but would be connected to an independent community water system.

5.8.7.3 SOLID WASTE

The City of Valdez uses city property at the old townsite as a disposal site for solid waste. This site, operated by the City for many years under a temporary landfill permit, has been the subject of criticism. The 1971 General Development Plan characterized the site as "... a health hazard, a fire hazard, an eyesore and contrary to law." (Bomhoff, Collie and Klotz, op. cit. p. 69) Since that report was written, the City has ceased operating the site as an open dump on a year-round basis; instead, the trenches are filled during summer months. However, because the site is located adjacent to Port Valdez in an area with a high water table, there is a potential for leached contamination of groundwater and surface waters. These problems and the limited remaining capacity at the present site have prompted the City to consider alternative locations and processes as means of disposing of its solid wastes (see Section 6.10.8.3).

The city landfill operates independently of Alyeska's solid waste disposal procedures at Alyeska's marine terminal. Alyeska uses an incinerator which is sufficient for its own needs, but has no excess capacity.

5.8.7.4 ELECTRICITY

Electrical service in Valdez is provided by Copper Valley Electric Association (CVEA), a nonprofit Rural Electrification Administration electric utility. First formed to serve the Copper River Basin area in 1955, CVEA took over facilities in Valdez following the 1964 earthquake. CVEA now provides electricity to both Valdez and Glennallen, with each community having an independent generation and distribution system.

The source of electricity in Valdez is seven diesel generators with installed capacity of 10.1 megawatts (MW). Firm capacity, a term that describes the capacity of the system without the service of the largest generator, is 7.3 MW. Peak demand occurs during the winter months. In 1979, the peak demand was 3.9 MW. The greatest peak demand ever recorded in Valdez was 4.875 MW and occurred in December, 1976.

CVEA has 32 miles of distribution line in Valdez and covers a service area that includes the downtown business and residential section and extends out the Richardson Highway approximately to Alpine Woods Subdivision. No significant limitations exist to the extension of electrical service to serve areas zoned for development.

CVEA is planning two projects that would expand its capacity to generate electricity and reduce its dependence on diesel oil, a fuel source that is becoming increasingly more expensive. The essential element of its plan is construction of the Solomon Gulch project, a $35 million hydro-electric plant that would produce 12 MW. Bids for the project were let in June 1979 and preliminary construction activity is underway. Completion is scheduled for mid-1981.

Although there is support in Valdez for construction of the hydro project, disagreement exists regarding CVEA's plans to construct a transmission line from Valdez to Glennallen in order to create an intertie between the two communities. Some local residents believe that Valdez ratepayers in effect would be subsidizing Glennallen for the construction costs of the line, estimated to be approximately half of the total $35 million project cost (Wayne April, "Solomon Gulch Debate Continues," Valdez Vanguard March 14, 1979, pp. 1, 7; "Hydro Project Raises Questions," Valdez Vanguard March 14, 1979). However, barring lawsuits or delays in permits that are pending before the U.S. Bureau of Land Management and the State Division of Lands, the CVEA General Manager expects the Solomon Gulch project, including the transmission line to Glennallen, to be completed on schedule.

The second element of the CVEA plan is the installation of a 9.0 MW pressure-reducing turbine in the trans-Alaska pipeline near Valdez. The turbine would be powered by the movement of oil through the pipeline as it descends from Thompson Pass to the Alyeska marine terminal. This energy source would be considered secondary as its availability would be subject to interruptions in oil flow based on the operating requirements of the pipeline.

With both the hydro-electric project and the pressure-reducing turbine in place in the pipeline, CVEA would use its diesel-powered generators as a supplementary rather than a primary source of power.

5.8.7.5 TELEPHONE

The Copper Valley Telephone Cooperative was among the community services hardest hit by the pipeline boom. The telephone switching equipment in use at that time was antiquated; the equipment lacked capacity and handled calls slowly. By the time the full impact of the population increase was apparent, the Cooperative lacked the lead time to order and install modern equipment with additional capacity.

In a 1975 survey of Valdez residents rating their satisfaction with various community services, telephone services received the worst rating, with almost 95 percent of the respondents rating it poor (Baring-Gould and Bennett, 1976, pp. 27, 48). Then, as now, long distance service was provided from Valdez by means of satellite linkage to Anchorage and then from Anchorage, by satellite, to points within and outside of Alaska. Because of the poor telephone equipment in use in Valdez, and insufficient capacity in the RCA satellite and in the switching equipment in Anchorage, it often required hours of effort to initiate a long distance call. By the time the Cooperative's new equipment arrived in 1977 and was placed in service, the worst of the pipeline boom had passed and demand on the telephone system had declined.

Although the Copper Valley Telephone Cooperative provides service to both Valdez and Glennallen, each system operates independently. The outmoded switching equipment in Valdez has been replaced with electronic equipment with increased capacity and speed.

The Valdez service area extends from new Valdez to Thompson Pass and includes lines to the Alyeska terminal.

As shown in Table 5.8.7.5-1, the number of telephones in service has paralleled fluctuations in population arising from construction of the pipeline.

The electronic switching equipment has a capacity of 2,500 telephone lines of which 1,300 are in use. The remaining 1,200 lines can accommodate an additional population of 3,600 or 1,200 households, assuming all households have private line service. If and when it is necessary, additional equipment can expand current capacity. Lead time for delivering additional equipment is approximately four months (John Friberg, General Manager, Copper Valley Telephone Cooperative, Valdez).

TABLE 5.8.7.5-1

Number of Telephones in Service
1974 - 1979

Year:	1974	1975	1976	1977	1978	1979
# of Telephones:	992	1,808	2,169	1,939	1,992	2,136

Source: Copper Valley Telephone Cooperative; CCC/HOK.

5.8.8 LIFE-STYLE AND CULTURE

Discussion of the life-style and culture of a community is difficult because interpretations are subjective and do not lend themselves to quantification. Even so, life-style and culture are essential elements of community life, vulnerable to changes, however difficult they may be to measure.

This section discusses life-style issues, particularly from the perspective of the effects of the trans-Alaska pipeline on community life, and Valdez's cultural resources.

LIFE-STYLE

The economic orientation of Valdez was established when Valdez was founded in the late 1890's, as a supply port serving Interior gold mining communities. This role gave Valdez a distinctly merchant orientation and distinguishes it from other coastal communities that have a strong fishing industry. For example, residents of fishing communities display an ambivalence about industrial development (not seen in Valdez) because of their concern that such development may negatively affect commercial fishing activities.

A desire to capitalize upon its strategic location as the closest ice-free port to the Interior continues today. Following the destruction of the old townsite in the 1964 earthquake, Valdez officials and community leaders promoted the community as a site for industrial development. The City takes credit for influencing its selection as the terminus of the trans-Alaska pipeline and as the site of the proposed Alpetco petrochemical facility.

Taxes from the Alyeska marine terminal has made Valdez a wealthy community, able to hire an array of legal and financial advisors and pursue a number of development strategies. However, because a great majority of Valdez residents favored the pipeline - eagerly awaited it, in fact - the impacts that would accompany its construction were underestimated or not considered. As a consequence, the transition caused strains in community life* (Baring-Gould and Bennett, 1976).

During the pipeline boom-time era, Valdez lost some of its small town intimacy. With rapid population growth, residents no longer knew everyone by name (ibid. p. 9). Social divisions grew, based on the term and location of residency and employment. Length of residency divided Valdez into oldtimers, with well-developed social relationships and shared values, and newcomers, thought to be part of a highly transient population.

*Much of the discussion of Valdez life-style is drawn from Michael Baring-Gould and Marsha Bennett, Social Impact of the Trans-Alaska Pipeline Construction in Valdez, Alaska 1974-75, (Anchorage: 1976).

The development of new residential subdivisions for industry employees also served to define new social groups. With the construction of the Black Gold Subdivision, employees of Alyeska and Fluor (Alyeska's management contractor in Valdez) literally lived apart from the rest of the community. In their study, Baring-Gould and Bennett concluded that this housing pattern, while isolating the oil industry employees, may have actually benefitted the community:

> "In general it appears that most newer residents withdraw into their work and housing clusters and leave the expanded social scene to older Valdez residents, a factor which may tend to reduce conflicts that might otherwise develop within the community." (ibid. p. 20)

Construction workers were also physically segregated, at the construction camps and trailer courts. Because of the long hours and the self-contained nature of the camps, construction trades workers became only minimally involved with he social and economic life of Valdez. For example, only about 6 percent of the workers went to Valdez on a daily basis, and more than half of the workers made an average of one or fewer trips to town per week (ibid. p. 24). Despite some friction between the construction workers and the longer-term residents of Valdez, the two groups tolerated one another with few open strains (ibid. p. 6).

In the past several years, Alyeska employees have become better integrated into community life. One of the City's seven councilmen is an Alyeska employee. Alyeska employees are also participants in a number of City Commissions and voluntary groups.

Valdez's pro-development attitudes persist, notwithstanding the inconveniences and conflicts that may have existed during the pipeline construction period.* In 1977 some 600 Valdez residents, polled as to whether the City should pursue industrial development such as a refinery and/or petrochemical plant, indicated their approval of such by a 6-to-1 margin, providing that such development be environmentally sound ("Valdezians approve of industrial development here by 6 to 1," Valdez Vanguard, November 9, 1977, pp. 1, 3).

Valdez officials actively competed with other Alaska communities to be designated the site of the proposed Alpetco petrochemical facility. Following Alpetco's selection of Valdez as the refinery site, community consensus favoring the project has remained high (Robert G. Knox, "Valdez takes its future into its own hands," Alaska Industry, March 1979, p. 21).

The most recent affirmation by Valdez voters of the community's industrial development goals occurred April 10, 1979 when 750 voters passed by a 4-to-1 margin the sale of $48 million worth of general obligation bonds for a new port (Jim Zahniser, "Valdez Passes $48 Million in Port Bonds," Anchorage Times, April 11, 1979).

*Impacts of the trans-Alaska pipeline on various aspects of community life are detailed in Sections 5.8.5.5 Residential Land Use; 5.8.7 Utility Systems; and 5.8.4 Public Services.

There is general agreement that attempts by city officials and residents to communicate about important community issues is complicated by the limited means of communication that exist in Valdez. Valdez has no daily newspaper nor does it have a local radio station, although residents do receive the rebroadcast signal of radio station KBYR in Anchorage. Valdez has community cable television, which offers programming from Anchorage, Seattle and Atlanta, but no local programming.

Because local officials are actively pursuing a number of development options and because of the dearth of local media, rumors abound in Valdez. As a consequence, City officials spend a great deal of time verifying and correcting rumors (Michael Schmidt, Planning Director, City of Valdez).

CULTURAL RESOURCES

Valdez residents have taken an active interest in the community's cultured offerings. The Community College provides a mix of cultural and vocational programs. The Valdez Heritage Center and Valdez Library serve as cultural resources for the community. These programs and facilities are described below.

PRINCE WILLIAM SOUND COMMUNITY COLLEGE

The Prince William Sound Community College began in Valdez as a University of Alaska learning center. Since its founding, this facility has been upgraded twice, first to an extension center and in July 1978 to a community college.

The community college offers both degree and community interest programs. Students taking degree courses can earn an Associate of Arts Degree. Community interest programs have included tours of foreign countries, weekend trips to Anchorage and community education workshops such as the seminar on the petrochemical industry in 1978. The college also has a variety of vocational programs.

To meet its future space requirements, the community college will occupy space in the new Valdez public library, presently under construction and due to be completed early in 1980. The college will occupy approximately 5,000 square feet, which will accommodate three classrooms and three offices. These new quarters will enable the college to offer more flexible programs, including daytime courses. At present, classes are held in the high school in the evening.

VALDEZ HERITAGE CENTER

The Valdez Heritage Center is funded by the City and was established in 1976. The museum's collection consists of photographs and artifacts that date from the founding of Valdez and include various pieces of fire equipment and the Pinzon Bar, reputed to be the longest bar in the State of Alaska. From the more recent past, the museum has photographs and articles about the 1964 earthquake, a model of the old townsite, and items related to construction of the pipeline.

VALDEZ LIBRARY

The Valdez Library has been in existence since 1930. The library contains approximately 16,000 volumes as well as periodicals, phonograph records and cassette recordings.

As part of a new civic center complex, a new 9,500-square foot library, costing $1.5 million, is under construction with completion estimated in early 1980. The new and larger quarters for the library will make it possible for the library to offer new programs including a story hour for children, new audio visual materials and exhibits, and to double the library's book collection between 1980-1983.

6.10 SOCIOECONOMIC IMPACTS

Socioeconomic impacts of the proposed project are described for the construction period 1980 through 1983 and for an operational period 1984-1990. Wherever possible, both short- and long-term impacts are discussed in terms relating to population projections through 1990. However, for some areas, such as land use, there is inadequate data on which to make detailed projections.

In addition to the direct impacts on public revenues and land use, secondary impacts of population growth and housing development are discussed. These secondary effects are among the most important long-term socioeconomic changes anticipated in Valdez. Since other significant industrial projects are identified which would be directly affected by development of the Alpetco project, no specific cumulative impacts are expected.

6.10.1 POPULATION AND EMPLOYMENT

6.10.1.1 LOCAL EMPLOYMENT AND POPULATION IMPACTS

DISCUSSION OF IMPACTS

Construction and operation of the Alpetco refinery will result in major growth for Valdez. The purpose of this section is to estimate the magnitude of this growth. During the period of refinery construction (mid-1980 to the end of 1983) there will be additional construction activity in Valdez, although minor in scale to the Alpetco project. Nevertheless, this analysis includes consideration of all construction activity so that local socioeconomic impacts during the period of 1980 to 1983 may be fully assessed.

The City of Valdez has recently sold $48 million in general obligation bonds to finance a major new port. Construction of this facility is schedule to begin late in 1980 and last until the fall of 1982.

Alpetco's operations workforce will require a large number of new housing units to be available in Valdez by early 1984. Construction of these units will doubtless begin early in the Alpetco construction project and last for many years after the plant has begun production. However, a great deal of housing construction is expected to occur in the last 18 months of the Alpetco project in order for buildings to be on the market in early 1984 when sudden, heavy demand for housing will occur (see Section 6.10.6.3).

Table 6.10.1.1-1 shows the estimates of combined construction manpower that will be present in Valdez during the construction phase of the Alpetco project. This manpower is the source of temporary population growth in Valdez from 1980 to 1983. Thereafter, an operations workforce filling some 579 positions in the Alpetco plant will cause a permanent expansion of the town's resident population.

Table 6.10.1.1-2 summarizes the employment and population changes expected in Valdez as a result of the project. Peak construction phase employment is estimated to be 3,592; incremental population 4,310.

During the operational period beginning in 1984, the Alpetco project would generate directly and indirectly some 1,180 new jobs and 2,124 new permanent residents. The new population will be composed of 708 new households, and 467 school-age children.

Table 6.10.1.1-3 shows incremental employment and population in Valdez at quarterly intervals during the construction period. Table 6.10.1.1-4 shows estimates of annual total (peak) population in Valdez from 1979 through 1990. Total Valdez population is estimated to be 6,009 in 1984, and 7,175 in 1990.

The population projections in Tables 6.10.1.1-3 and 4 are depicted in Figure 6.10.1.1-1, which shows Valdez population change between 1960 and 1990.

It must be noted that these estimates indicate a general level of anticipated impact only. The numbers have not been rounded off in this analysis so that the reader can reconstruct all of the calculations used to derive them. However, the use of unrounded numbers in the analysis does not imply a corresponding degree of precision in the results.

DISCUSSION OF METHOD USED TO DERIVE EMPLOYMENT AND POPULATION IMPACTS

1. Introduction

It is assumed that population growth in Valdez will occur mainly as a result of additions to the local labor force that are required to 1) build and operate the plant (primary employment); 2) meet the demands of the new industry and its employees and their families (secondary employment); an 3) fill jobs created by the permanent expansion and diversification of the local economy that occurs as a result of the project construction (residual employment). Local employment generated by a major project is typically estimated by means of an employment multiplier that states a relationship between primary and secondary employment. A multiplier of 2.5, for example, indicates that 1.5 secondary jobs are created by each primary job; thus; total employment is 2.5 times primary employment, which is known or can be easily forecast. Employment multipliers are theoretical devices that give, at best, very general estimates of the employment impacts of a project. The size of the local employment multiplier is a function of both the characteristics of the primary employment (where it is housed, its permanent place of residence, etc.) and the size and complexity of the local economy in which it occurs.

The Alyeska experience has shown that more employment can be expected in the years following completion of the project than can be identified as either primary and secondary project employment, or as normal growth that would have occurred in the course of events without the project. This employment termed "residual employment," is largely the result of public sector spending by both state and local government, but private spending will also help to support it.

Population increase is estimated from total incremental employment by means of a factor that expresses the average number of nonworking dependents for each member of the labor force. This factor is derived from the labor force participation rate of the local population. It is referred to in this analysis as the labor force participation factor. If, for example, a community has a population of 2,500, and 80 percent, or 2,000 people, are members of the labor force, then there are .25 dependents (nonworking members of the population) for each worker (500 ÷ 2,000 = .25). The labor force participation factor is 1.25 (2500 ÷ 2000 = 1.25). The total population will increase by 1.25 times the number of workers. For example, if 250 new jobs are created in this community, and the newcomers have (or soon acquire) similar socioeconomic characteristics of the resident population, then

there would be a population increase of some 313 people (250 x 1.25).

The number of incremental households that will result from the population increase is estimated from the average number of people per household that is typical of the new population or of the community, whichever is appropriate. A household size of about 3 people is now typical in most areas of the United States.

The number of school-age children is derived from an appropriate estimate of the proportion of the new population comprising the age group 5 through 17.

Essentially, the estimates of employment and population impacts shown in Table 6.10.1.1-2 are derived from the foregoing method. However, a large number of assumptions are necessary to implement them.

There are important differences between the the construction work force and the operations work force. These differences require the use of different sets of multipliers and population factors. Fortunately, a good deal of information is available about the Valdez population and work force from survey and census work by University of Alaska sociologists Michael Baring-Gould and Marsha Bennett ("Social Impact of the Trans-Alaska Pipeline Construction in Valdez, Alaska, 1974-1975," Testimony prepared for the MacKenzie Valley Pipeline Inquiry, Anchorage, Alaska 1976; and Baring-Gould, et al., Valdez City Census, March 1978, University of Alaska, Anchorage, 1978).

Two important assumptions of the present analysis are that the socioeconomic patterns of the Alyeska construction work force will also characterize the Alpetco construction work force, and that socioeconomic patterns of the current Valdez population will also characterize new permanent residents. There are, however, important differences in the dimension of the two projects: Alyeska involved a much larger temporary construction work force than Alpetco plans, and Alpetco will involve a much larger permanent operations work force than Alyeska currently has.

The peak Alyeska construction labor force was in the neighborhood of 4,500. While the marine terminal was the single largest project in Valdez during pipeline construction, it did not account for all of the primary employment there. The pipeyard and warehouse complex, transshipment activity, and pipelaying north from Valdez also contributed to primary Alyeska construction employment. It is not known precisely how high peak primary employment was in Valdez. Direct employment on the terminal in July 1976 was reported by Fluor to be 4,000 (see A. G. Pickett, "Construction on Schedule at Valdez Terminal," Pipe Line Industry, August, 1976, p. 97). There were probably between 300 and 700 people working directly on other project components.

In contrast, Brown and Root, project planners for Alpetco, forecast a peak construction work force of 2,820. While the Alyeska terminal is operated by approximately 250 people (including contract maintenance personnel), the Alpetco refinery will require 579.

The question of overall comparability of the two projects is important to the question of similarity of socioeconomic characteristics of the work forces of the two projects, and also to the question of residual employment in the Valdez economy after completion of construction -- that is, employment that cannot be attributed to plant operation alone. The matter of residual employment, as well as the derivation of the employment multipliers, population factors, and assumptions about utilization of local unemployed are discussed below.

2. Explanation of Multipliers and Population Factors

a. Local Employment Multipliers

Second order employment impacts are typically estimated by the use of employment multipliers which are derived from economic base theory or input-output models for specific economic areas.* No multipliers have been calculated for the Valdez economy, and are available "off the shelf," so selection of an appropriate multiplier is largely a matter of estimating general magnitude of secondary employment effects of both phases of the project. It is assumed that local employment multiplier effects are considerably smaller than those at the state level and that they are smaller during construction than operation. Local employment multipliers are estimated to be 1.3 for the construction phase and 1.5 for the operation phase.

A recent publication by the Alaska Department of Community and Regional Affairs treating the subject of onshore impact of offshore oil development in the Gulf of Alaska uses local multipliers of 1.1 to 1.5, depending upon the degree to which various activities touch local communities (Lois S. Kramer, et al., Planning for Offshore Oil Development; Gulf of Alaska OCS Handbook, Juneau, Alaska; Alaska Dept. of Community & Regional Affairs, 1978; p. 232-233). Explicit distinction is not made between construction and operation phases, but presumably 1.1 represents a construction period multiplier of a task with few onshore contacts, and 1.5 represents the ceiling of secondary employment effects during operation.

In a recent publication on the community impacts of large development projects, the U.S. Department of Housing and

*There is extensive discussion in the literature about income and employment multipliers. One introduction to the subject is found in Thomas Muler, Economic Impacts of Land Development, (Washington, D.C. The Urban Institute, 1976) p. 64tt.

Urban Development suggests that secondary employment effects may be between 0.3 and 0.9 (multipliers of 1.3 - 1.9) during construction, and between 1.1 and 2.3 (multipliers of 2.1 - 3.3) during operations (HUD, Rapid Growth from Energy Projects, Washington, D.C. 1976). These values seem high for Valdez where the economy is small and structurally simple, and where the construction work force will be housed in camps isolated from town. The labor force multipliers developed by Lynn Pistoll of the Alaska Department of Labor from the Alyeska experience (a low estimate of 2.21 and a high estimate of 2.47) depict statewide (in contrast to local) employment impacts, and are therefore not useful for estimating employment in Valdez (op. cit.).

It is difficult to calculate our own economic base theory multiplier in Valdez because of the scarcity of readily available information about labor activity there. If, however, we made quick assumptions about the percent of employment in each sector shown in Table 5.8..11-2 that is export oriented (i.e., it responds to demand from outside the local economy), we can estimate a local multiplier of approximately 1.6 as follows:

Sector	Full-Time Employment	% Export	Number Export
Construction	209	85	178
Transportation	283	95	269
Comm. & Utilities	35	0	
Wholesale Trade	6	0	
Retail Trade	218	0	
Fire	28	0	
Service	102	0	
Fed. Govt.	67	100	67
State Govt.	288	100	288
Local Govt.	49	0	
	1,285		802

$$\frac{1,285}{802} = 1.6$$

While this is a very crude measure, it suggests that our use of 1.5 for the operational phase is reasonable.

b. Labor Force Participation Factor

It is assumed that during construction there will be .2 of a dependent for every new member of the work force; and during operation there will .8 of a dependent for each new member of the labor force. Thus, the labor force participation factors used in this analysis are 1.2 (construction) and 1.8 (operation).

For the most part, construction workers will come to Valdez alone, leaving dependents at home. An exception to this tendency may occur among the supervisory and management

personnel. At the height of construction of the trans-Alaska pipeline, Valdez's total work force grew by some 6,750 people (4,500 primary jobs and 2,250 secondary) and school enrollment peaked at some 671 students over its 1973 level (Table 5.8.1-4). This indicates an overall increase of about 0.1 student per worker. Baring-Gould and Bennett report that in 1975 (before the peak of construction employment) over 80 percent of the town population consisted of working adults (Baring-Gould and Bennett, 1975, op. cit. p. 15). This information indicates an overall laborforce (nonresident and resident workers in construction and non-construction activities) participation factor of 1.25. For the Alpetco work force, we propose a factor of 1.2.

Information in Tables 5.8.1-2 and 5.8.2.1-5 point to a current labor force participation factor in Valdez of 1.8 (total population minus Harborview residents divided by total work force including half of those not reporting an occupation, or

$$\frac{3,349 - 106}{1,789 + 17} = 1.79)$$

This value is not inconsistent with labor force participation rates elsewhere in urban Alaska. Information from a recent demographic survey in Anchorage, for example, indicates a factor of 1.94 excluding nonadult members of the work force.* If we assume that the new permanent labor force of Valdez will be similar to the present permanent labor force of Valdez and urban Alaska generally, a participation factor of 1.8 seems reasonable for estimating the population increment that will be created by the new employment.

c. Household Size

An average of 3.0 people per household will be used to estimate the number of new households created by the permanent incremental population. Alaska households tend to be slightly larger than those outside Alaska of 2.89 (1976)**. Data in Tables 5.8.1-7 and 5.8.1-8 show an average of 2.97 for Valdez (omitted are hospital residents and work camp residents).

*Anchorage Urban Observatory. 1978 Population Profile, Municipality of Anchorage, Anchorage, Alaska 1978. The survey found 3.2 people per household, 1.5 working adults per household, and unemployment of 10 percent; 3.2 [1.5 x 1.1] = 1.9.

**See Sternbiel and Hughes, Current Population Trends in the United States (New Brunswick, New Jersey: Center for Urban Policy Research 1978). Compare Anchorage Urban Observatory, op. cit., and Anchorage Urban Observatory, A Profile of Five Kenai Peninsula Towns (Anchorage, Alaska, 1977), in which average household size for several Southcentral towns was over 3.2 persons.

It is difficult to estimate the number of new households during construction because much of the Alpetco work force will be housed in dormitory-style work camps (a 2,500-bed camp is planned) and because construction workers will seek temporary living accommodations (motels, campers, etc.) that do not characterize a permanet resident population. However, there will be substantial demand for housing in Valdez during construction.

d. School Enrollment

It is assumed that 10 percent of the incremental population during construction will be children of school age (5-17), and that 22 percent of the incremental population during operation will be school-age children.

The estimate of school enrollment during construction is inferred from information about the Alyeska construction experience in Valdez. Baring-Gould and Bennett reported a mid-1975 population of Valdez of 6,512 (Baring-Gould and Bennett, p. 15); school enrollment in the fall of that year was 746 (Table 5.8.1-4). This points to an overall (including resident and nonresident population) ratio of school children of 11.5 percent. We know that peak incremental population in Valdez was about 7,000 people, and peak incremental school enrollment was about 671 (928 in 1976 minus 257 in 1973), which suggests a ratio of school-age children among the incremental population of about 9.6 percent. From this information, an estimate of 10 percent has been selected.

The estimate of school enrollment during operations is based on information in Table 5.8.1-3. Valdez currently has a ratio of school-age children to total population of 22 percent, (Table 5.8.1-3), which is lower than the average ratio elsewhere in Alaska. It seems reasonable to assume that a process of self-selection is at work in Valdez whereby people with fewer children (on the average) settle there. Assuming this tendency will continue, we have used the current ratio of 22 percent to estimate school enrollments during the early years of plant operation.

3. Post-Construction Residual Employment

Valdez experienced permanent growth during pipeline construction. The city was about 1,000 people in 1970, a time when Valdez had already been selected as the southern terminus of the pipeline and some work in anticipation of construction had begun. The city now appears to have a stable population of some 3,350, yet the marine terminal employs only about 250 people. Thus, the three years of construction gave rise to a population increase of some 1,625 people that cannot be attributed to the marine terminal operation and its secondary employment, assuming a local employment multiplier of 1.5 and a labor force participation ratio of 1.8 (3,300 - 1,000 - [250 x 1.5 x 1.8] = 1,625).

Alaska's economy as a whole also experienced substantial permanent growth as a result of the pipeline project. This phenomenon

is discussed in a recent paper by Alaska Department of Labor economist Lynn Pistoll ("An Oil Pipeline Employment Multiplier and Post Construction Residuals in Employment," Alaska Department of Labor, Research and Analysis Section, Issues and Commentary, Juneau, Alaska, October 13, 1978), who has proposed a formula for estimating the magnitude of post-construction employment impacts in the state-wide economy. The formula relates these impacts to the size of the construction labor force.

In the present analysis it is assumed that the Valdez economy will continue to undergo permanent expansion during the three-year Alpetco construction effort. Pistoll's method is adapted to estimate these local employment impacts. It is important to note that the use of this method (which incorporates the operations work force and its secondary employment) has a substantial effect on the projections of permanent population increase shown in Table 6.10.1.1-2.

Based on his study of total employment growth in Alaska during and after construction of the trans-Alaska pipeline, Pistoll has proposed this general formula to account for total statewide employment during the operational phase of a major development project:

Peak construction work force x constant x operational work force x employment multiplier.
The constant is derived by the formula:

$$\frac{\text{Post-construction employment} - \text{Operations work force} \times \text{multiplier}}{\text{Peak construction employment}}$$

A constant for the City of Valdez based on the Alyeska experience is .19 using the following assumptions:

Post construction employment	=	1,785 (Tables 5.8.2.1-2 and 5.8.2.1-5)
Preconstruction employment	=	555 (estimated from pop. in 1970 of 1,000)
Operations work force	=	250
Local multiplier	=	1.5
Peak work force	=	4,500

$$\frac{(1{,}785 - 555) - (250 \times 1.5)}{4{,}500} = .19$$

We now have the necessary values to apply the Pistoll formula to Valdez using Alpetco work force projections. Since local unemployment utilization (224) is significant at the local level, it must be subtracted. Thus,

$$2{,}820 \times .19 + 579 \times 1.5 - 224 = 1{,}180$$

The total employment in Valdez in the early years of operation of the project will approximate 1,180 if the economy undergoes permanent expansion during the construction period as it did during pipeline construction.

4. Utilization of Local Unemployed

At the present time Valdez has a high number of unemployed. The University of Alaska census in 1978 reported 288 unemployed (Table 5.8.2.1-6) and the City of Valdez OEDP Committee estimated 269 (Table 5.8.2.1-2, note 3). For purposes of this analysis we assume an unemployed work force of 280 people.

It will be assumed that 80 percent of these people, or 224, will find employment during and after refinery construction. This employment may be direct construction or operation labor; it may be secondary employment created by the primary work force; or it may be employment in existing local jobs vacated by people who become directly employed in the construction or operations labor force.

Note that our estimate of the number of local unemployed people (224) who find jobs in the local economy during refinery construction is not the total number of Valdez residents who we estimate will be employed on the construction project (325 to 330). The difference between the two estimates, 244 on the one hand and 325 to 330 on the other hand, is the number of people who will leave existing jobs for construction work and whose former jobs will be filled by nonresidents. Thus, for the purpose of estimating incremental population we are only interested in the number of local unemployed who find jobs, because all other new jobs will, in effect, be filled by newcomers. That is, if a local man vacates an existing job for refinery employment, and his old job is filled by a nonlocal person, then, in terms of incremental population, the effect is the same as if the nonlocal person filled a refinery job directly. However, for purposes of estimating the spending patterns of construction wages, it is important to know the total number of local people in the construction work force, because local people will have different spending habits than nonlocal people.

A summary of the foregoing method is presented in Table 6.10.1.1-5.

TABLE 6.10.1.1-1

Total Construction Manpower Requirements in Valdez During Alpetco Project

Year	Month	Alpetco(1)	Port Expansion(2)	Other Construction(3)	Total
1980	June	15			15
	July	150			150
	Aug.	200			200
	Sept.	220			220
	Oct.	250			250
	Nov.	200	52		252
	Dec.	200	52		252
1981	Jan.	200	52		252
	Feb.	200	52		252
	March	200	62		262
	April	206	62		268
	May	214	62		276
	June	382	62		400
	July	483	18		501
	Aug.	622	18		640
	Sept.	804	18		822
	Oct.	987	18		1,005
	Nov.	1,137	18		1,155
	Dec.	1,256			1,256
1982	Jan.	1,394			1,394
	Feb.	1,534			1,534
	March	1,781	17		1,798
	April	2,016	17		2,033
	May	2,263	27		2,290
	June	2,446	27	50	2,523
	July	2,638	45	75	2,758
	Aug.	2,767	45	100	2,912
	Sept.	2,799	36	100	2,935
	Oct.	2,820		100	2,920
	Nov.	2,693		100	2,793
	Dec.	2,606		100	2,706
1983	Jan.	2,457		100	2,557
	Feb.	2,306		100	2,306
	March	2,006		100	2,106
	April	1,587		100	1,687
	May	1,158		100	1,258
	June	837		100	937
	July	579		100	679
	Aug.	408		100	508
	Sept.	193		100	293
	Oct.	107		100	207
	Nov.	64		100	164
	Dec.	0		100	100

(1) Source: Brown & Root, Inc.
(2) Source: Sante Fe Engineering Service, Project Engineers for City of Valdez Port Expansion.
(3) Source: CCC/HOK estimate.

TABLE 6.10.1.1-2

Peak Employment and Population Impacts, Construction and Operation Phase

Phase	Incremental Employment	Incremental Population	Incremental Households	Incremental School Enrollment
Construction (Peak)				
Alpetco(1)	3,442	4,130	---	413
Total(2)	3,592	4,310	---	431
Operation(3)	1,180	2,124	708	467

Source: CCC/HOK.
See Table 6.10.1.1-5and Discussion of Method Used to Derive Employment and Population Impacts, Section 6.10.1.1.

(1) Based on peak primary Alpetco labor force of 2,820, October, 1982; Table 6.10.1.1-1.
(2) Based on peak total primary labor force of 2,935, September, 1982; Table 6.10.1.1-1.
(3) Based on operations work force of 579; peak = average.

TABLE 6.10.1.1-3

INCREMENTAL EMPLOYMENT AND POPULATION IN VALDEZ DURING ALPETCO CONSTRUCTION, QUARTERLY, 1980-1983

Year	Quarter	Primary[1] Employment	Secondary[2] Employment	Utilization of Local[3] Unemployed	Total[4] Incremental Employment	Total[5] Incremental Population
1980	3	195[6]	59	112	142	170
	4	251	75	112	214	257
1981	1	255	77	168	164	197
	2	315	95	168	242	290
	3	654	196	224	626	751
	4	1,139	342	224	1,257	1,508
1982	1	1,575	473	224	1,824	2,189
	2	2,282	685	224	2,743	3,292
	3	2,868	860	224	3,504	4,205
	4	2,806	842	224	3,424	4,109
1983	1	2,323	697	224	2,796	3,355
	2	1,294	388	224	1,458	1,750
	3	493	148	112	529	635
	4	157	47	56	148	178

Notes:
(1) Alpetco, port expansion, other; from Table 6.10.1.1-1.
(2) Figures in column 3 times .3.
(3) Estimated recruitment of unemployed workforce in Valdez.
(4) Column 3 plus column 4 minus column 5.
(5) column 5 times 1.2.
(6) Includes June.

Source: CCC/HOK; see Discussion of Method for Employment and Population Projections.

TABLE 6.10.1.1-4

Estimated Annual Peak Population in Valdez, 1979-1990
with Alpetco Project

Year	Base Population[1]	Incremental Population[2]	Total Population
1979	3,350	0	3,350
1980	3,451	257	3,708
1981	3,555	1,508	5,063
1982	3,662	4,310[3]	7,972
1983	3,772	3,355	7,327
1984	3,885	2,124	6,009
1985	6,189	0	6,189
1986	6,375	0	6,375
1987	6,566	0	6,566
1988	6,763	0	6,763
1989	6,966	0	6,966
1990	7,175	0	7,175

(1) Base population is assumed to increase by 3 percent per year.
(2) From Tables 6.10.1.1-3 and 6.10.1.1-2.
(3) From Table 6.10.1.1-2.

TABLE 6.10.1.1-5

Summary of Method Used to Derive Table 6.10.1.1-2

I. Construction Phase (peak)

1. Employment
   Peak labor force x local employment multiplier - utilization of local unemployed.
   a) Alpetco only
      2,820 x 1.3 - 224 = 3,442
   b) Alpetco and other construction activity
      2,935 x 1.3 - 224 = 3,592
2. Population.
   Employment x construction period labor force participation factor (1.2).
   a) Alpetco only
      3,442 x 1.2 = 4,130
   b) Alpetco and other construction activity
      3,592 x 1.2 = 4,310
3. Households - Estimate 80 percent of primary Alpetco labor force housed in camp (2,256 workers);
4. School enrollment.
   Incremental population x % of school-age children.(1)
   a) Alpetco only
      4,130 x .1 = 413
   b) Alpetco and other construction activity
      4,310 x .1 = 431

II. Operation Phase (average = peak)

Same method used above, except for step which includes post-construction residual employment, and use of different factors.

1. Employment
   Operations labor force x loal employment multiplier + residual employment - utilization of local unemployed
   (579 x 1.5) + (.19 x 2,820) - 224 = 1,180
2. Population
   Employment x labor force participation factor (1.8)
   1,180 x 1.8 = 2,124
3. Households
   $$\frac{\text{Population}}{\text{Average number/household}} \qquad \frac{2,124}{3} = 708$$
4. School Enrollment
   Population x % of school-age children (.22)
   2,124 x .22 = 467.

Source: CCC/HOK.
See Discussion of Method for Employment and Population Projections.

6.10.1.2 STATEWIDE EMPLOYMENT AND POPULATION IMPACTS

Construction and operation of the Alpetco plant can be expected to have a significant impact on income and employment outside the Valdez area. Most of this nonlocal impact will occur in Anchorage, the commercial and population center of the State.

Stimulus to statewide employment will be primarily from purchases by Alpetco and its contractors of goods and services in the Anchorage area, both during construction and operation, and the spending of wage and salary income in Anchorage. No estimate is available of the value of local purchases by Alpetco and its contractors, but the total purchases at refineries of comparable size suggest that the amount may be substantial. (See Discussion in Section 6.10.2 and Table 6.10.2-14.)

Expenditures by construction and operational employees in Valdez and in Alaska Alaska outside Valdez are estimated in Tables 6.10.2-11 and 6.10.2-12. Expenditures, are estimated to total some $20.3 million in Valdez and $66.1 million in Alaska during the three-and a-half-year construction period (1980-1983), and $6 million in Valdez and $3.0 million in Alaska annually thereafter (constant 1979 $).

Increased spending by State government will also contribute to economic growth statewide. New revenue to the State from the plant will be limited to corporate income taxes and personal income tax on wages and salaries.* State corporate income taxes, shown in Table 6.10.2-13 are estimated by Alpetco to range from approximately $9 million to $24 million annually over the life of the project. Estimates of annual personal state income tax revenue from project employees are shown in Tables 6.10.2-9 and 6.10.2-10. During the three-and-a-half-year construction period, state personal income tax revenue is estimated to be in the neighborhood of $12.1 million. During operation, state personal income tax revenue will be approximately $1 million.

Spending in the public and private sectors will create multiplier effects at the State level.

Alaska Department of Labor economist Lynn Pistoll has estimated the construction phase statewide employment multiplier of the trans-Alaska pipeline project to have been between 2.21 and 2.47 ([2,820 x .35] + [579 x 2.21] = 2,267; See Pistoll 1978).

*Alaska does not have a general statewide property tax. AS.43.56 imposes a property tax of 20 mills on oil and gas property used in production, and transportation of crude oil and natural gas. Refineries are not included in this tax. Legislation may be introduced to include refineries in Title 43, when ALPETCO is built,, which will be strenuously resisted by both Valdez and Kenai, the two municipalities in the State which would otherwise have exclusive powers of property taxation over refineries. Sale of the State's royalty oil to Alpetco will be at a price equivalent to its royalty value, so there is no difference from the point of view of state revenue between selling royalty oil or receiving cost royalty payments directly from producers.

If it is assumed that the multiplier effects of the Alpetco project will be comparable to those of the Alyeska project, we could expect total incremental employment in Alaska of between 6,232 and 6,965 during the construction phase. We have already estimated peak incremental construction employment in Valdez of some 4,130 (Alpetco project only), which indicates peak employment outside of Valdez of from 2,102 to 2,835 people.

These estimates are probably high, however, because the Alpetco project will not be comparable to the pipeline project in the degree to which it stimulates secondary employment statewide. Unlike the pipeline project, Alpetco construction activity will occur at tidewater where material and plant components can be barged directly from fabrication yards and supply centers in Japan and the West Coast of the United States. Thus, for example, demand for Alaska-based transportation services during construction will be very small, in contrast to the tremendous demand for truck, rail, and air transportation created by the trans-Alaska pipeline project.

The nature of the project, as well as its location, will tend to isolate it from the Alaska economy. From the point of view of the Alaska construction industry, a high technology plant of this type is exotic. Unlike the pipeline project, Alpetco will create little civil construction (roads, work pads, site preparation, bridges, etc.) that Alaska-based contractors conventionally perform, and who are supplied by a network of local businesses.

Thus, on the basis of the assumption that statewide construction multiplier effects of the Alpetco project will be smaller than those created by the Alyeska project, an employment multiplier of 2.21 (Pistoll's low estimate for Alyeska construction) probably represents a high estimate for Alpetco. Thus, total statewide peak incremental employment will probably not exceed 6,232 during Alpetco construction.

We can also expect the relative level (rate) of statewide post-construction residual employment to be smaller following completion of the Alpetco project than following the Alyeska project because, at the State level, the former will generate far less public sector revenue than the latter. State spending of North Slope royalty income and pipeline property tax revenue has made a large contribution to maintaining employment levels in Alaska since completion of the pipeline in mid-1977. Alpetco will not generate state revenue that even remotely compares with the annual sums created directly and indirectly by the trans-Alaska pipeline. To estimate total statewide employment in the years following completion of the refinry, we will use Pistoll's method and assume that his low values derived from the Alyeska experience represent realistic upper limit values for the Alpetco project. This calculation indicates total maximum incremental statewide employment of 2,267 during the operation period.

While it is clear that the Alpetco project will generate income and employment in Alaska outside Valdez, it is not clear to what extent this statewide economic stimulus will cause net population growth. If

the new spending and employment is absorbed by the current laborforce (Alaska currently has a high level of unemployment and a large amount of excess capacity in the private sector of the economy), little population growth will occur. If, however, incremental spending in the public and private sectors that is attributable to Alpetco creates demands which exceed the number or skills of the unemployment pool, or if new job seekers are attracted to the State by the prospect of work, population impacts will occur. Whether minimum or maximum population growth occurs will depend largely on the condition of the statewide economy at the time. Stagnant conditions would result in minimum population growth, while boom conditions (caused, for example, by construction of a North Slope gas pipeline), would result in maximum population growth.

Table 6.10.1.2-1 shows the foregoing maximum statewide employment estimates for the construction and post-construction periods, and the maximum population impacts they would produce in a booming statewide economy. Thus, under "worst case" assumptions, maximum population impacts during the peak construction month (October, 1982) would be in the neighborhood of 7,757 people, 3,627 of these outside Valdez. In the early years of operations, maximum population impacts would be in the neighborhood of 4,298, approximately half of these in Valdez and half outside Valdez.

TABLE 6.10.1.2-1

Estimated Maximum Statewide Employment and Population Impacts[1]

Project Phase	Employment			Population		
	Total	Valdez	State Outside Valdez	Valdez	State Outside Valdez	Total
Construction (Peak)	6,232[2]	3,442[3]	2,790	4,130[3]	3,627[4]	7,757
Operation (immediate post-construction years)	2,267[5]	1,180[3]	1,087	2,124[3]	2,174[6]	4,298

(1) These estimates could be realized only if the Alaska economy was operating at full capacity with high employment.
(2) Peak labor force of 2,820 x employment multiplier of 2.21.
(3) ALPETCO impacts only; from Table 6.10.1.1-2.
(4) 2,700 x labor force participation factor of 1.3.
(5) Method from Pistoll (1978); with substituted values [2,820 x .35] + [579 x 2.21] = 2,267.
(6) 1,087 x labor force participation factor of 2.

6.10.2 INCOME

The purpose of this section is to estimate income to the public and private sectors from major expenditures and payments by Alpetco and its workforce. Estimates are made of wage and salary payments by Alpetco for construction and operation labor; expenditures in Valdez and elsewhere in Alaska by the construction and operation workforce; all Federal and State personal income tax payments; and corporate income tax payments by Alpetco to the State and Federal government.

Construction manpower requirements for the plant are shown in Table 6.10.2-1; operation manpower in Table 6.10.2-2.

It is assumed that the typical construction work schedule will be six 12-hour days per week, with nine weeks on and one week off. Thus, full-time employment would be 282 days per year (365 - 52 x .9). The hourly wage is assumed to be $17.87; this is an average base wage of $14.62 per hour with time and a half ($21.93) for time over 40 hours a week. This amounts to a monthly wage of approximately $5,774.00 (Brown and Root is the source of monthly wage estimates). A worker who was employed full time for a twelve-month period would have an annual gross income of $60,472.00 (282 days x 12 hours/day x $17.87/hour).

To project personal income tax revenue and to estimate private personal expenditures it is necessary to make assumptions about the average worker's total annual income. This income includes wages received from the Alpetco project and other employment as well. Annual average income of construction workers will tend to differ with their place of residency.

For purposes of this analysis the construction workforce is divided into three groups based on place of permanent residence: 1) workers from Valdez, 2) workers from elsewhere in Alaska, and 3) workers from the U.S. outside of Alaska. The average annual income of these workers is likely to differ significantly. Valdez residents are likely to work for the longest time on the Alpetco project; Alaska workers somewhat less time; and U.S. workers the least time. We have assumed that the gas pipeline or other major projects are not underway in the State simultaneously with Alpetco construction (which would tend to increase the average annual income of the Alaska construction workforce), and we have pegged average incomes to the full time equivalent of Alpetco construction employment as shown in Table 6.10.2-3. The dollar amount of these incomes is shown in Table 6.10.2-4. Thus, it is assumed that the average total gross income of the Valdez contingent is 50% of the full-time wage equivalent, or $30,236.00 in the first year of construction, and 75% of the full-time wage equivalent, or $45,354.00 in the second, third, and fourth years of construction; other assumptions are made for the Alaska and U.S. contingents of the workforce.

The next step in the analysis requires assumptions about the relative proportions of each geographical contingent in the total workforce. This distribution will change as the nature of tasks and the manpower levels change during the life of the project. In the early months of

construction, when site preparation is underway, a large percentage of the total manpower needs will be met with Valdez residents. As more complicated structural work begins and manpower requirements increase, a greater portion of the workforce will be recruited from outside Valdez, mainly from Alaska. In the latter stages of the project, when process equipment and instrumentation is installed, a large contingent of skilled technicians from outside Alaska will be required. In the meantime, the Valdez contingent of approximately 325 workers will remain employed (It is assumed that there will be turnover in this contingent, which is reflected in the 75% figure in column 3, rows 2, 3 and 4 of Table 6.10.2-3 , but that the average annual number employed will fluctuate within narrow limits around 325 people). Table 6.10.2-5 and Figure 6.10.2-1 depict a pattern of geographical distribution of workers that is assumed to characterize the Alpetco construction workforce.

Table 6.10.2-6 shows the gross payroll (excluding benefits, employer contributions to union funds, etc.) to each geographical contingent of the workforce. These figures are derived from Table 6.10.2-5 and an average monthly wage of $5,574.00. For example, in the second year of construction there will be a monthly average of 218 workers from Valdez paid $5,574.00 per month; thus, 218 x 12 x $5,574 = $14,581,584. Alpetco's payment for constructon labor will total some $264,000,000 over the three-and-a-half-year construction period.

Table 6.10.2-7 shows the approximate rates of Federal and State income tax on various income levels. This information, together with information on Table 6.10.2-4, permits estimates of personal income taxes that will be paid by workers on the $264 million Alpetco construction payroll. Also, Table 6.10.2-7 shows the disposable income (after-tax income) of persons at various income levels. Thus, a person with an annual gross income of $21,165 in Alaska will have about 72.3%, or $15,302, to spend after income taxes are paid. (Alaska income tax must be paid by residents and nonresidents alike on all earnings in the State.)

Table 6.10.2-8 shows estimated expenditure patterns of the construction workforce by place of residence. Thus, Valdez residents are expected to spend half of their disposable income locally; and a quarter within Alaska outside Valdez; Alaska residents 3% in Valdez, etc.

The foregoing information and assumptions provide the basis for estimating personal income taxes and the magnitude and location of expenditures in the State by the construction workforce. Table 6.10.2-9 shows estimated personal income tax revenue to the Federal and State government. During the three-and-a-half-year construction period a total of some $62,649,895 will be paid to the U.S. Treasury, and some $12,078,571 will be paid to the Alaska Department of Revenue.

Table 6.10.2-10 shows annual Federal and State tax revenue from the operations workforce (constant 1979 dollars). This is based on an annual salary wage income of $30,000 for plant operators and maintenance personnel, and $52,000 for company administrators (Source: Brown &

Root estimates). Thus, annual Federal personal income tax revenue will approximate $4,332,276, and annual State revenue will approximate $904,128.

Table 6.10.2-11 shows estimated expenditures by the construction workforce of $20,387,821 in Valdez and $66,143,251 elsewhere in Alaska (total expenditures in the State of $86,531,072). Table 6.10.2-12 shows estimated annual expenditures by the operations workforce (constant 1979 dollars) of $6,099,312 in Valdez and $3,049,657 elsewhere in the State (total expenditures in the State of $9,148,969).

Table 6.10.2-13 shows the estimated Federal and State corporate income taxes payable by Alpetco over the life of the project (inflated dollars).

There is no reliable way to estimate the value of purchases that will be made by Alpetco in the State during construction or operation. However, the ongoing need for material, parts, and equipment during plant operations will certainly create commercial opportunity for Alaska businessmen. A refinery of comparable size to the proposed Alpetco plant reports current expenditures of some $20 million per year, excluding service contracts (personal communication, Gulf Oil Company, June 21, 1979). Table 6.10.2-14 lists the items purchased regularly for plant operation.

TABLE 6.10.2-1

Alpetco Construction Labor Force Requirements

Year	Month	Number of People
1980	June	15
	July	150
	August	200
	September	220
	October	250
	November	200
	December	200
1981	January	200
	February	200
	March	200
	April	206
	May	214
	June	332
	July	483
	August	622
	September	804
	October	987
	November	1,137
	December	1,256
1982	January	1,394
	February	1,534
	March	1,781
	April	2,016
	May	2,263
	June	2,446
	July	2,638
	August	2,767
	September	2,799
	October	2,820
	November	2,693
	December	2,606
1983	January	2,457
	February	2,306
	March	2,006
	April	1,587
	May	1,158
	June	837
	July	579
	August	408
	September	193
	October	107
	November	64
	December	0

Source: Brown & Root, Inc.

TABLE 6.10.2-2

Alpetco Operations Manpower Requirements

Employment Category		Number of Employees
Plant Operations		231
Maintenance		291
Administrative		57
	TOTAL	579

Source: Brown & Root, Inc.

TABLE 6.10.2-3

Estimated Ratio of Full-Time Equivalent Wage Income, and Percent Earned in Alaska, for Construction Workforce

Residency	Year of Construction	% Full-Time Equivalent	% of Income Earned in Alaska
Valdez	1	50	100
	2	75	100
	3	75	100
	4	75	100
Alaska	1	50	100
	2	60	100
	3	60	100
	4	60	100
U.S.	1	35	50
	2	50	75
	3	50	75
	4	50	75

Source: CCC/HOK Estimates.

Note: Assumes pipeline or other large construction project does not occur simultaneously with the Alpetco project.

TABLE 6.10.2-4

Estimated Average Annual Income of Construction Workforce
(1979 $)

Year of Construction	Average Annual Income of Construction Workforce by Place of Residence ($)			
	Valdez	Alaska	U.S.	
			Total Earnings	Alaska Earnings
1	30,236	30,236	21,165	10,583
2	45,354	36,283	30,236	22,677
3	45,354	36,283	30,236	22,677
4	45,354	36,283	30,236	22,677

Note: This assumes full-time project construction income is $60,472, based on 282 days/year, 12 hours/day, at average hourly wage of $17.87; average annual wages derived from Table 6.10.2-3.

TABLE 6.10.2-5

Quarterly and Annual Average Alpetco Labor Force
by Place of Residency

Year of Construction	Quarter	Total Average Unemployment	Average Employment by Residence: Valdez % of Total	Valdez No.	Alaska % of Total	Alaska No.	U.S. % of Total	U.S. No.
1	3(1)	195	50	98	35	68	15	29
	4	217	50	108	35	76	15	33
Annual		206		103		72		31
2	1	200	50	100	35	70	15	30
	2	251	50	126	35	88	15	37
	3	636	50	318	35	223	15	95
	4	1,127	29	327	50	563	21	237
Annual		554		218		236		100
3	1	1,570	21	330	50	785	29	455
	2	2,242	14.5	325	50	1,121	35.5	796
	3	2,735	12	328	50	1,368	38	1,039
	4	2,706	12	325	45	1,218	43	1,163
Annual		2,313		327		1,123		863
4	1	2,256	14.5	327	50	1,128	35.5	801
	2	1,194	27	322	23	275	50	597
	3	393	25	98	15	59	60	236
	4	57	10	6	5	3	85	48
Annual		975		188		366		421

(1) Includes June.

Source: Manpower requirements from Table 1 by Brown and Root, Inc.
Estimates of distribution by place of residency by CCC/HOK.

TABLE 6.10.2-6

Estimated Gross Wage Payments to Construction Workforce
by Place of Permanent Residence
(1979 $)

Estimated Gross Wages ($)

Year	Valdez	Alaska	U.S.	Total
1	3,444,732	2,407,968	1,036,764	6,889,464
2	14,581,584	15,785,568	6,688,800	37,055,952
3	21,872,376	75,115,224	57,724,344	154,711,944
4	12,574,944	24,481,008	28,159,848	65,215,800
TOTAL	$52,473,636	$117,789,768	$93,609,756	$263,873,160

Source: Annual averages by area shown in Table 6.10.2-5 multiplied times average monthly wage of $5,774 times number of construction months in each year.
CCC/HOK Estimates.

TABLE 6.10.2-7

Approximate Rates of Federal and State Income Taxation on Various Gross Annual Income Levels

Gross Annual Income	Federal Income Tax as % of Gross(1)	FICA as % of Gross	Alaska Income Tax as % of Gross(2)	ESC and School Tax as % of Gross	Disposable Income as % of Gross
21,165	17.5	6.13	3.7	.4	72.3
30,000	22.1	6.13	4.6	.3	66.9
30,236	22.2	6.13	4.7	.3	66.7
36,283	23.9	6.13	5.0	.25	64.7
45,354	26.6	6.13	5.6	.2	61.5
52,000	29.4	6.13	6.2	.17	58.1

(1) Federal income tax rates were estimated as an average of three categories; single with one exemption, married with two exemptions, and married with four exemptions. Calculations made on the basis of 1979 tax tables.
(2) Alaska State income tax is 21% of Federal income tax.

Source: CCC/HOK

TABLE 6.10.2-8

Distribution of Disposable Income; Percent Spent in Each Location by Place of Residence

	Spending Distribution		
Residence	Valdez	Alaska	Other
Valdez	50	25	25
Alaska	3	72	25
U.S.	3	5	92

Note: Alaska means Alaska outside Valdez.

Source: CCC/HOK.

TABLE 6.10.2-9

Estimated Federal and State Personal Income Tax Revenues from Construction Workforce

Year	Residency of Workforce	Gross Wage Payments ($) (1)	Federal Income Tax (% of Annual Gross Wage Income(2)	Federal Tax	State Income Tax (% of Annual Gross Wage Income(3)	State Tax ($)
1	Valdez	3,444,732	22.2	764,731	4.7	161,902
	Alaska	2,407,968	22.2	534,569	4.7	113,174
	U.S.	1,036,764	17.5	181,434	1.8	48,728
2	Valdez	14,581,584	26.6	3,878,701	5.6	816,569
	Alaska	15,785,568	23.9	3,772,751	5.0	789,278
	U.S.	6,688,800	22.2	1,484,914	3.5	234,108
3	Valdez	21,872,376	26.6	5,818,052	5.6	1,224,853
	Alaska	75,115,224	23.9	17,952,538	5.0	3,755,761
	U.S.	57,724,344	22.2	12,814,804	3.5	2,020,352
4	Valdez	12,574,944	26.6	3,344,935	5.6	704,197
	Alaska	24,481,008	23.9	5,850,980	5.0	1,224,054
	U.S.	28,159,848	22.2	6,251,486	3.5	985,595
Total		$263,873,160		$62,649,895		$12,078,571

Notes:
(1) From Table 6.10.2-6.
(2) From Tables 6.10.2-4 and 6.10.2-7.
(3) From Tables 6.10.2-4 and 6.10.2-7; note that Alaska income tax is paid only on wages earned in Alaska; therefore Alaska income rate is prorated for non-Alaska workers.

TABLE 6.10.2-10

Estimated Federal and State Personal Income Tax Revenues from Operations Workforce

Employment Category	Number of Employees	Average[1] Annual Gross Salary ($)	Total Salary Payments ($)	Federal Income Tax (% of Gross)[2]	Federal Tax ($)	State Income Tax (% of Gross)[2]	State Tax ($)
Plant Operations	231	$30,000	$ 6,930,000	22.1	$1,531,530	4.6	$318,780
Maintenance	291	$30,000	$ 8,730,000	22.1	$1,929,330	4.6	$401,580
Administration	57	$52,000	$ 2,964,000	29.4	$ 871,416	6.2	$183,768
			$18,624,000		$4,332,276		$904,128

(1) Brown & Root, Inc. estimates.
(2) From Table 6.10.2-7.

TABLE 6.10.2-11

Estimated Expenditures in Alaska by Construction Workforce, 1980 - 1983

Year	Residency of Workforce	Gross Wage Payment(1)	Disposable Income (% of Gross Annual Income)(2)	Disposable Income $	Expenditures in Valdez % of Gross(3)	Expenditures in Valdez $	Expenditures in Alaska Outside Valdez % of Gross(3)	Expenditures in Alaska Outside Valdez $
1	Valdez	$ 3,444,732	66.7	$ 2,297,636	50	$ 1,148,818	25	$ 574,409
	Alaska	2,407,968	66.7	1,606,115	3	48,183	72	1,156,403
	U.S.	1,036,764	72.3	749,580	3	22,487	5	37,479
2	Valdez	14,581,584	61.5	8,967,674	50	4,483,837	25	2,241,919
	Alaska	16,785,568	64.7	10,213,262	3	306,398	72	7,353,549
	U.S.	6,688,800	66.7	4,461,430	3	133,843	5	233,071
3	Valdez	21,872,376	61.5	13,451,511	50	6,725,756	25	3,362,878
	Alaska	75,115,224	64.7	48,599,549	3	1,457,986	72	34,991,675
	U.S.	57,724,344	66.7	38,502,137	3	1,155,064	5	1,915,107
4	Valdez	12,574,944	61.5	7,733,590	50	3,866,795	25	1,933,398
	Alaska	24,481,008	64.7	15,839,212	3	475,176	72	11,404,232
	U.S.	28,159,848	66.7	18,782,618	3	563,478	5	939,131
Total						$20,387,821		$66,143,251

Notes:
(1) From Table 6.10.2-6
(2) From Table 6.10.2-4 and 6.10.2-7
(3) From Table 6.10.2-8

TABLE 6.10.2-12

Estimated Annual Expenditures in Alaska by Operations Workforce
(1979 Dollars)

Employment Category	Number of Employees	Average Annual Gross Salary[1] $	Total Salary Payments $	Disposable Income % of Gross	Disposable Income $ [2]	Expenditures in Valdez[3] $	Expenditures in Alaska Outside Valdez[3] $	Total Expenditures in Alaska
Plant Operations	231	30,000	6,930,000	66.9	4,636,170	2,318,085	1,159,043	3,477,128
Maintenance	291	30,000	8,730,000	66.9	5,840,370	2,920,185	1,460,093	4,380,278
Administration	57	52,000	2,964,000	58.1	1,722,084	861,042	430,521	1,291,563
TOTAL	579		18,624,000			6,099,312	3,049,657	9,148,969

Notes:
(1) Brown & Root, Inc. estimates.
(2) Percentage of gross income from Table 6.10.2-7.
(3) From Table 6.10.2-8.

TABLE 6.10.2-13

Estimated Federal and State Corporate Income Taxes, 1983-2003
(Constant 1979 $ Million)

Year	Pre-Tax Earnings	Federal Tax	State Tax	Investment Tax Credit	Total Tax
1983	-2.4	0	0	0	0
1984	162.8	39.5	9	33.4	48.5
1985	149.5	36.9	8.3	31.2	45.2
1986	145.7	36.0	8.1	30.4	44.1
1987	142.1	35.1	7.9	29.6	43.0
1988	138.7	43.1	9.7	18.0	52.8
1989	138.1	57.6	13.0	0	70.6
1990	137.7	57.4	12.9	0	70.4
1991	146.8	61.2	13.8	0	75.0
1992	155.8	64.9	14.6	0	79.6
1993	154.8	64.5	14.6	0	79.1
1994	157.3	65.6	14.8	0	80.4
1995	159.9	66.6	15.0	0	81.6
1996	162.5	67.7	15.3	0	83.0
1997	165.1	68.8	15.5	0	84.3
1998	167.6	69.9	15.8	0	85.7
1999	170.2	70.9	16.0	0	86.9
2000	172.8	72.0	16.2	0	88.2
2001	175.3	73.1	16.5	0	89.6
2002	177.9	74.1	16.7	0	90.8
2003	253.0	105.4	23.8	0	129.2

Source: Alpetco

TABLE 6.10.2-14

Items Purchased Annually for Refinery
Operation and Maintenance

BEARINGS AND BEARING PARTS
BLOWERS & FANS PLUS PARTS
BOLTS, RIVETS, SCREWS, NUTS, AND WASHERS
CLOTHING AND SAFETY GEAR
CATALYSTS, CHEMICALS, COMPOUNDS, AND GREASE
COKE CUTTING PARTS FOR HANDLING AND LOADING FACILITIES
COMPRESSORS AND COMPRESSOR PARTS
COUPLING AND COUPLING PARTS
CRANE, HOIST PARTS
ELECTRICAL - GENERAL
ELECTRICAL - MAJOR UNITS AND PARTS
EXCHANGER, CONDENSERS, COOLERS AND PARTS
FITTINGS - PIPE, TUBING, WELDING, ORIFICE
FLANGES
GASKETS
HEATERS - BOILERS AND PARTS
HOSE AND ACCESSORIES
INSTRUMENTS AND INSTRUMENT PARTS
JANITORIAL SUPPLIES
MECHANICAL EQUIPMENT PARTS
MIXERS AND PARTS
OFFICE FURNITURE AND SUPPLIES
PACKING AND MECHANICAL SEALS
PUMPS AND PUMP PARTS
TUBES AND TUBING
TURBINES
VALVES AND VALVE PARTS
WIRE AND CLOTH

Source: Gulf Oil Company

6.10.3 LOCAL ECONOMY

The purpose of this section is to provide a brief discussion in qualitative terms of the economic impacts of the Alpetco project in Valdez. It is perhaps needless to say that construction activity will cause a major boom for local businesses, such as banks, bars, restaurants, hotels, retailers, taxi cab companies, etc., The personal income of Valdez residents will rise as a result of wage employment and earnings from the spending of the construction workforce. Even the nonlocal workers will tend to use local banks and spend a part of their wages in town. In addition to the basic construction labor force, a large number of people will be in Valdez for short assignments: State and Federal inspectors of various sorts, engineering and design consultants, Alpetco partner representatives, and manufacturer's representatives for the process equipment, pumps, instruments, and other components of the plant. These itinerates will tend to keep hotels and restaurants filled to capacity. Of gradually increasing significance during the construction period is the building that will be necessary to accommodate the permanent resident population. We have assumed that a minimum of 100 construction workers per month for approximately the last 18 months of plant construction will be engaged in this building effort. Entire subdivisions will need to be built, with houses, streets, water and sewer lines, and electrical service. Also during this period local merchants may expand their stores to accommodate the business of a town that will be over 1-1/2 times its former size. New businesses, requiring new buildings, may also be started (a theatre, bowling alley, supermarket are possible examples).

Temporary shortages of goods and services, and inflation of housing costs (for nonhomeowners) will occur during the construction period, but these effects should not be as prolonged or severe as during the Alyeska construction boom. It must be remembered that the City of Valdez is two to three times as large as it was when the Alyeska boom began, and the Alpetco peak construction workforce will be 1/4 smaller than peak Alyeska construction workforce.

Estimates are presented in Section 6.10.5.1 of the impacts of the Alpetco project on local employment during the operational phase. Approximately 826 secondary jobs will be created in Valdez in addition to 579 plant positions. A technical distinction should be made between two types of secondary employment: <u>indirect employment</u>, which occurs in businesses that either provide inputs to the new plant or utilize products of it, and <u>induced employment</u>, which occurs in businesses that serve the new population. It is assumed that virtually all of the secondary employment created in Valdez will be induced. While in the long run it is quite possible that "downstream" petrochemical processing and manufacturing activity will locate in Valdez to utilize feedstocks from the Alpetco plant, it seems unlikely to occur in the timeframe of this analysis (1980-1990). Local businesses may supply some of the equipment and material required during the routine operation (see Table 6.10.2-14). However, most operating supplies will come directly from outside Alaska, and what does come from Alaska distributors will be sold by Anchorage-based firms, which are better situated to meet the needs of refiners on the Kenai Peninsula, in Fairbanks, and at Prudhoe Bay, as well as other general

customers. In economic jargon, the plant will not have forward (supply) or backward (product) linkages to the local economy. Thus, while the local economy will expand greatly as a result of the Alpetco-related population growth, the private sector will continue to be oriented primarily to the needs of the resident population (in contrast to the needs of industrial activity).

The relative high cost of living in Valdez should decrease after the plant is built and operating. This is because economies of scale will be realized in the distribution of goods. In place of small ma and pa grocery stores, for examples, supermarkets will exist. Also, it is estimated by the City of Valdez that the transportation cost of goods shipped from Seattle will be reduced approximately 30% by the operation of the new Port of Valdez. Because their market it larger, retailers will be able to offer a larger variety of goods. On balance, the Alpetco project will result in numerous positive impacts on the local economy.

6.10.4 PUBLIC FISCAL IMPACTS

The City's present favorable financial situation will not be diminished by the Alpetco project, and it may be enhanced if the local government wishes to raise its property tax rate. In its effort to encourage the Alpetco consortium to locate its plant in Valdez, the city administration stated that Valdez was fully capable of providing public services required by both the construction boom and the permanent population growth during operations, and that no financial impact aid would be required.

The public fiscal impact of new development has two dimensions: public costs and public revenues. In this assessment of the public fiscal impacts of the Alpetco project on Valdez, no attempt is made to estimate the cost of providing to the permanent incremental population specific public services, and then to compare these costs with estimated municipal revenues derived from the plant and the new population. A cost accounting fiscal impact exercise of this type does not see, necessary in view of the substantial public per-capita wealth in Valdez, both before and after the plant is built. Also, however, an adequate basis for estimating future per-capita service costs in Valdez does not exist.

Current per-capita costs of providing public services in Valdez may not be a reliable basis for estimating future costs. The permanent population of Valdez will increase almost 80% between 1979 and 1984. The cost of providing specific local public services (police protection, fire protection, water and sewer service, local government, etc.) on a per-capita basis is likely to differ significantly (either higher or lower) between the town of 3,000 and 6,000 people, because of economies and diseconomies of scale peculiar to the delivery of each service, and because of general current excess capacity in some public service systems in Valdez. Also, additional services or different types of services may be needed in a proportionately larger town. It also must be noted that current per-capita service costs in Valdez are higher than statewide per-capita averages suggesting that an adequate level of public service (relative to Alaska standards), could be provided by the City for a lower per-capita cost.

On the revenue side, an interesting question about the impact of the Alpetco refinery is property tax income it will generate for the City. At the present time Valdez receives approximately 70% of its total municipal income from a general tax on real property (Table 5.8.3-1).* The Alpetco refinery and other local construction spawned by it will add over $1.3 billion to the tax base of the City. However, Valdez does not have unrestricted access to its tax wealth through the property

*The balance of municipal revenues (from user fees, State- and Federal-shared revenue, fines, etc.) should increase over the long run in direct proportion to population increases. The only revenue source that may decrease per capita is earnings from the permanent fund.

tax for general government purposes. There are State statutory restraints on the ability of local government to raise property tax revenue for operating expenses. Within these restraints, post-construction Valdez can maintain its current per-capita tax revenue with a lower mill rate, but it will have to raise the mill rate substantially to increase its present per-capita property tax income of about $1,500.

Alaska Statutes 29.53.045, 29.53.050, and 43.56.010 establish a set of limits on municipal property taxing power. According to these provisions, no municipality may under any circumstances tax at a rate to exceed 30 mills. Within this ceiling of 30 mills, a municipality may tax the full assessed value of its private property as long as it does not exceed revenue of $1,500 per person, or it may tax property valued at no more than 225% of the average state per-capita assessed valuation multiplied times the number of local inhabitants. Municipalities may choose between the latter two alternatives for calculating their allowable property tax income.

Alpetco estimates the cost of plant construction to be approximately $1.8 billion at the time of completion. However, $1.25 billion is Alpetco's estimate of the 1979 dollar cost of major capital items (excluding startup costs, insurance, etc.). The figure $1.25 billion represents current replacement value which would be the plant's assessed value (in 1979 dollars) in the early years of operation before the income of the facility is established and before significant depreciation has occurred. A substantial amount of additional private construction will occur in Valdez as a result of the growth stimulated by Alpetco. Let us consider private housing construction alone. Assuming (a) that approximately 700 new dwelling units will be required, (b) that 20 percent of these will be multi-family units valued at $60,000 per unit, and (c) that 80 percent of the new dwelling units will be single-family houses valued at $100,000 per unit, then about $65 million of taxable residential property will be added to the tax role in addition to the $1.25 billion plant.

Total population in the year 1984 has been projected at about 6,000 (see Table 6.10.1.1-4). At the present time the state average per capita assessed value is $47,342. Therefore, in 1979 dollars, the maximum property tax revenue that Valdez could raise in 1984 is $9 million under Alternative 1, or $19,173,500 under Alternative 2. While Alternative 2 allows the City more revenue than Alternative 1 ($1,500 per capita versus $3,196 per capita), it requires a millage rate of 30, five times the current rate. Alternative 1 generates the same amount of revenue per capita that Valdez now receives from its property tax, but it does so at approximately half the current millage rate. A rate of 14 mills is required to generate under Alternative 2 the maximum revenue permitted by Alternative 1 (see Table 6.10.4-1).

The foregoing discussion shows how State law will affect the ability of the City of Valdez to raise property tax revenue from the Alpetco plant. It should be noted that while there is no difference between the Alpetco and the Alyeska terminal from the point of view of City revenue, there is a difference between the two facilities from the point of view of State revenues. The Alyeska terminal generates

property tax income for the State by way of a 20-mill tax (with a credit for local property taxes paid by Alyeska). Since Valdez currently has a property levy of about 6 mills, the State levy is approximately 14 mills, which generates about $22 million for the State. Refineries are not included in the property taxable under the 20-mill statewide property tax (AS 43.56), so there will be no property tax income to the State from the Alpetco plant.

The Alpetco project will add approximately $197 million of bonding capacity to the City (it currently has $175 million of unused capacity). Because there are no limits on the ability of the City to raise property taxes to retire bonded debts, the City can be expected to fund substantial capital improvement projects with general obligation bonds.

Also, it should be noted that, if revenue shortfalls occur because of unexpected public service costs, the City of Valdez could resort to new sources of nonproperty tax income such as a sales tax.

TABLE 6.10.4-1

Estimates of Maximum Property Tax Revenue
for Operating Purposes, City of Valdez, 1984
(1978 Dollars)

Assumptions

Assessed value = $2,948,000,000[1]

Population of Valdez = 6,000[2]

State average per capital assessed value = $47,342[3]

Alternative 1

Taxable property = 100 percent

Maximum revenue = $1,500 x 6,000 = $9,000,000

Rate = $9,000,000 divided by $2,948,000,000 = 3 mills

Maximum per capita revenue = $1,500

Alternative 2

Taxable property = 6,000 x $47,342 x 2.25 = $639,117,000 (.2168 of assessed value)

Maximum revenue = .03 x $639,117,000 = $19,173,500

Rate = 30 mills

Maximum per capita revenue - $3,196

---

(1) Existing assessed value $1,632,070,848, plus $1,250,000,000 Alpetco, plus $65,000,000 new residential construction.
(2) From Table 6.10.1.1-4 (6,009 rounded to 6,000).
(3) From Alaska Taxable 1978, Alaska Department of Community & Regional Affairs.

6.10.5 PUBLIC SERVICES AND FACILITIES

This section examines the likely impacts that the population increase attributable to the construction and operation of the proposed Alpetco facility will have on the provision of public services in Valdez.

Based on their experiences with providing services during the trans-Alaska pipeline boom, service providers in Valdez are anticipating an increased demand for social counseling and referral services, including mental health, crisis counseling, and marriage and juvenile counseling; alcohol and drug abuse counseling; fire protection; and criminal justice services. The school system will have to accommodate approximately the same number of students during both the construction and operations phases of the proposed Alpetco facility.

Expansion of state-funded services (public health, social services) is difficult to predict since levels of funding and staffing are a function of legislative appropriations and executive policies. Thus, a determination of staffing increases and related costs is not possible to make. Providers of locally funded services (Valdez Community Hospital, Valdez Mental Health Center) express confidence that they will be able to hire additional staff as required.

HEALTH CARE

Valdez's health care system has capacity to accommodate the impacts of the construction and operation phases of the Alpetco plant. Alpetco will provide an on-site first aid facility and will rely on local health care professionals and facilities for routine medical problems; Alpetco workers requiring emergency medical care will be airlifted to Anchorage. The discussion below focuses on the impact of additional population on community facilities and services.

VALDEZ COMMUNITY HOSPITAL

The hospital is presently operating at well below its capacity, which is sufficient to serve a population of over 12,000. This estimate is based upon "the number of beds needed by each hospital service area ... to meet its needs 99.9% of the time (all but one day every two years)." (South Central Health Planning and Development, Health Systems Plan, Anchorage, March, 1979, pp. 149-151). On this basis, the Health Systems Agency for South Central and Western Alaska estimated that Valdez would require nine hospital beds in 1983 if its population were 7,522.

The agency notes, however, that the number of hospital beds required in Valdez would likely increase as additional physicians come to the community to practice medicine and make referrals to the local hospital. The number of private doctors in Valdez grew from two to three in 1979, with a fourth doctor anticipated in 1980 if the Alpetco project proceeds on schedule. Even with an increase in the number of private physicians in Valdez, the hospital's 15 beds should prove adequate during the peak of construction of the Alpetco facility. The hospital administration actually looks forward to an increase in population

made possible by construction and operation of the Alpetco facility in order to make better use of the hospital's existing facilities and equipment.

PUBLIC HEALTH

From experience gained during the construction of the pipeline, the Department of Health and Social Services anticipates that additional demands on staff time will be made during the Alpetco construction phase. During the pipeline era, immigrating families, and particularly women, experienced a sense of great isolation. Because their husbands worked lengthy shifts and they lived away from their extended families, they were prone to both emotional and physical problems (Mary Ray, R.N., Valdez Health Center).

The Department will need to provide extended family counseling services to construction workers, their families and other Valdez residents. In addition, the Department anticipates increasing its surveillance and treatment of communicable diseases. Although the Department does not have ample budgetary resources, it is expected that these expanded services will receive necessary funding.

VALDEZ MENTAL HEALTH CENTER

The Director of the Mental Health Center believes that the facility is sufficiently large to accommodate any increase in caseload that may be attributable to the construction of the Alpetco facility. However, additional staff may be necessary. The director expects an increase in the incidence of alcohol and drug abuse during the construction phase of the Alpetco facility. The center's five-year program calls for the addition of a staff member specialized in alcohol and drug abuse programs in 1980-1981 and an additional clinician in 1981-1982.

In addition to an on-going alcohol abuse program, the center will establish a crisis line telephone service to provide counseling and referral service for alcohol or drug abuse problems, suicide prevention and other immediate problems on a 24-hours-a-day basis. Further, the center will continue to perform community outreach in the form of newspaper articles about various mental health topics and preventative health care courses, including child rearing and stress management.

HARBORVIEW DEVELOPMENTAL CENTER

Harborview had problems during the construction of the pipeline in ways that might occur again during construction of the Alpetco facility. First, the scarcity of housing made it difficult, if not impossible, for staff to find affordable housing. Second, Harborview lost many staff members, particularly men, to higher paying construction jobs. Maintaining the proper complement of direct care personnel became a difficult task for Harborview's administration.

EDUCATION

The construction and operations phases of the proposed Alpetco petrochemical facility will make almost equal demands upon the Valdez school system. During the construction phase it is expected that only a relatively few construction workers will be accompanied to Valdez by their wives and children.* An estimate of Alpetco-induced school enrollment during the height of the construction phase is approximately 430 students over and above the school population expected to reside in Valdez in 1982, in the absence of Alpetco. Table 6.10.5-1 provides a breakdown in the number of students expected in the elementary, junior and senior high school grades during the peak construction year of 1982.

Although they will comprise a far smaller group than the construction workers, many operations employees will relocate to Valdez with their families. These families will contribute approximately 467 children to the Valdez school system.

Consequently, unlike other service providers, the Valdez school system will have to accommodate a permanent, rather than short-term, increase in demand for teachers and facilities. Further, this impact will begin earlier than other permanent impacts - in the 1980-1981 school year - and reach peak demand in the 1982-1983 school year. Table 6.10.5-1 estimates growth in student enrollment from 1979 to 1990 attributable to the school system's 3 percent annual growth rate and to the Alpetco project.

In order to accommodate the existing K through 6 grade population, Growden-Harrison Elementary School has had to rely on modular classrooms, which are throught by school officials to be unsuitable for long-term use. When the new elementary school authorized in August 1979 is completed in 1981, it will be able to accommodate the students currently being taught in modulars and the new student population.

Table 6.10.5-2 compares estimated student enrollment in Valdez schools in 1982, the projected height of Alpetco construction activity, with the 1982 capacity of Valdez schools; these estimates assume that the mixture of grades and facilities will continue to be the same in 1982 as they were in September 1978. Table 6.10.5-2 shows that with completion of the new elementary school, surplus capacity will exist for K-6 students. The junior high school will likely face slight overcrowding, and the high school will be near capacity.

By 1990, the Valdez school system will have an estimated student population of 1,617 (see Table 6.10.5-1). If the school population in 1990 is distributed in the same proportion that it was in 1979, the school system will have approximately 928 elementary school students (grades K-6); 235 junior high school students (grades 7-8); and 454 senior high school students (grades 9-12).

The prospect of growing student enrollment due to the Alpetco facility has caused school officials to consider alternative courses of action. To make maximum use of existing facilities, officials may decide to

group grades differently. Other possibilities include construction of a new junior high school or enlargement of the senior high school, which was designed for expansion from 400 to 600 students.

SOCIAL SERVICES

Based on its experience during the pipeline era, the Department of Health and Social Services expects an increased demand for its services during the construction of the Alpetco facility, especially those related to family support. During construction of the pipeline, adolescents neglected by their working parents added to the Department's caseload. These children had little supervision and few activities. Following completion of the pipeline, the Department offered services to a number of wives and children who were abandoned by departing male workers (Faye Guthrie, Regional Social Service Manager, Department of Health and Social Services, Anchorage).

The pipeline also directly affected Department operations. During that period the Department found it difficult to keep existing employees or to attract new ones. Employees living in Valdez found they could obtain better paying jobs. Potential new employees could not find affordable housing.

The Department anticipates that construction of the Alpetco facility will increase its caseload with the same types of problems as occurred during the pipeline era. The Department hopes to increase the size of its staff as the situation may require.

FIRE DEPARTMENT

The Valdez Fire Chief believes he has sufficient men and equipment to provide adequate fire protection services to Valdez during and after the construction of the Alpetco facility. The new station at Robe River Subdivision will increase coverage and reduce response time to that part of the community.

Alpetco will be responsible for the provision of fire protection services at both the site of the refinery as well as the marine terminal. Alpetco will hire and train its own Fire Squad whose work of prevention and detection will be backed up by an on-site fire detection and protection system (water spray; foam; dry chemical; and Halon extinguishing systems) as well as fire trucks and other mobile equipment (Brown & Root, Plant Fire Protection and Security Manual, Houston: May, 1979).

POLICE

The Chief of Police believes that the Police Department is in an excellent position to meet any public safety issues arising from the construction and operation of the Alpetco facility. The 13-person staff is large enough to assign two men to road patrol duty 24 hours a day; this number of police will be adequate for Valdez's needs until the City increases in size by another 2,000 residents. When that population is reached, Valdez will hire an additional police officer.

In addition to its size, the police force has experience dealing with construction boom situations. Since the number of construction workers employed by Alpetco will be lower than the number employed by Alyeska, the Department feels well prepared.

TABLE 6.10.5-1

Estimated Student Enrollment

1979-1990

Year	Base	3% Annual Growth	Incremental School Enrollment[1]	Total
1979	--	--	0	765[2]
1980	765	23	26	814
1981	788	24	150	962
1982	812	24	430	1,266
1983	836	25	336	1,197
1984	861	26	467	1,354
1985	1,354	41	0	1,395
1986	1,395	42	0	1,437
1987	1,437	43	0	1,480
1988	1,480	44	0	1,524
1989	1,524	46	0	1,570
1990	1,570	47	0	1,617

Source: CCC/HOK.

(1) These estimates are 10 percent of peak construction employment shown in Table 6.10.1.1-3 (1982 figure from Table 6.10.1.1-2); and 22 percent of the incremental operations workforce shown in Table 6.10.1.1-2.

(2) This 1979 enrollment figure is the estimate of the Valdez school system. It is calculated on the basis of the students in each 1978 grade level advancing to the next level in 1979. Use of this methodology results in a student population of 742, an increase of 13 students over the 1978 figure. The 742 figure is then multiplied by the school system's 1.03 percent annual growth factor, resulting in the 1979 estimate of 765 students.

TABLE 6.10.5-2

Comparison of Student Enrollment and School Capacity in Peak Alpetco Construction Year - 1982

	Projected Student Enrollment			Design Capacity (Students)	Excess (+) or Deficit (-) Capacity
	Base[1]	Alpetco-Related[2]	Total		
Elementary	480	247	727	851[3]	+124
Junior High	121	63	184	172	- 12
Senior High	235	121	356	400	+ 44
TOTAL	836	431	1,267		

Source: Valdez City Schools; CCC/HOK.

(1) Base student population for 1982 calculated on the basis of 3 percent annual growth from 1978.
(2) Assumes that students in 1982 will be distributed in grades K-12 in the same proportion as they were in 1978.
(3) The permanent classrooms of the Growden-Harrison Elementary School have a capacity of about 301 students (see Table 5.8.4-2) and the design capacity for the new elementary school, scheduled for completion in 1981, will be approximately 550 students.

6.10.6 LAND USE

This section describes effects of Alpetco development on resource extraction and recreation resources in the region and more localized impacts on patterns of land use in Valdez. While regional impacts on land use are expected to be small, local impacts will be much more significant.

Important land use impacts in Valdez include a demand for housing which results in a probable housing shortage, and expansion of the urban area to accommodate the Alpetco project and new housing. Accompanying these effects will be possible construction of temporary housing at the expense of more permanent housing; and housing development on land planned for another long-term use such as industry. These and other locational effects are discussed at the regional and local levels for the following sections.

6.10.6.1 REGIONAL IMPACTS

Construction and operation of the Alpetco petrochemical complex will probably not facilitate exploration or development of natural resources in the region. Factors which might produce a situation conducive to resource development, increased labor supply and a broadened tax base for the City of Valdez will have little influence outside of a small area around Valdez.

Exploration for oil and gas and hardrock minerals requires a relatively small and specialized labor force. It is unlikely that industry would consider the availability of increased labor supply in Valdez a significant inducement to either begin exploration or to undertake development of timber, hardrock minerals, or petroleum resources. It could be argued that because Valdez today has an unemployment rate estimated at between 16% and 18%, representing some 300 people, it is in a better position to support such development than it would be when most become employed in construction of the Alpetco facility. Demand for Alpetco labor and support facilities in Valdez during the 1980-1983 construction period could actually deter development of any other large projects in the vicinity which would be in need of local skilled and unskilled labor.

The proximity of resources (such as hardrock minerals or timber) to Valdez is also an important consideration in determining whether an increased labor supply in Valdez would affect resource development. For example, resource extraction at a site in Prince William Sound which could only be reached by water or air would not become any more feasible by the presence of a larger labor force in Valdez. Since the City is isolated from areas of known resource potential, the Alpetco project should have little impact on regional development patterns.

Another way in which the Alpetco facility could indirectly facilitate resource development in the region is through its payment of taxes. Using revenues from the sale of general obligation bonds, the City could construct facilities such as warehouses, docks, fuels depots, etc., which could assist in the processing, storage or export of timber, minerals, or fish. For example, the City is planning to construct a new port, to be financed by the sale of $48,000,000 in

general obligation bonds to encourage private industrial development. It is difficult to project additional improvements to its industrial infrastructure which the City might undertake in an effort to stimulate new resource development. However, it is the stated objective of Valdez to encourage viable new industries which can supplant its petroleum industries when oil reserves are depleted in the future.

6.10.6.2 VALDEZ IMPACTS

Implementation of the proposed project will have important land use impacts on Valdez. These effects may be described as direct and secondary impacts. Direct impacts include the conversion of land from open space to industrial use. Secondary impacts include the use of land throughout the community for housing for Alpetco and other new employees and their families. Although construction and operation of the refinery will be the most significant change in land use, the secondary growth-inducing impacts should more fundamentally alter development patterns in Valdez for the foreseeable future. For example, the refinery will be built at an isolated location, while new housing will be developed on land spread throughout the community. The following sections discuss these direct impacts on land use and scenic resources and secondary impacts onindustrial development. recreational facilities and land use planning. Demand for housing and residential land use is discussed in Sec. 6.10.6.3.

DIRECT IMPACTS

In a small community such as Valdez, with little developable terrain, a project of this size represents a major commitment of land. A rough approximation of the total developable land area exclusive of defined flood channels and steep slopes is 9.5 square miles (small amounts of residential land east of Robe Lake are not included). This area may be smaller if flood hazards identified on the Flood Hazard Map (Figure 5.8.5.6-2) are considered. The Alpetco project, including pipeline corridors, covers an area of approximately 2.4 square miles, or 25 percent of all developable land in Valdez. Further, the proposed refinery is located on what may be the largest single block of land in the area which is free of development limitations.

The significance of this land conversion, however, must be considered in light of potential alternative uses for the site. The fact that the site was zoned for open space use until it was selected for the Alpetco refinery indicates that it was not considered as strategically important a location for industry as land west of Valdez Glacier Stream, or land which has direct frontage on the Richardson Highway. Its value as recreational open space also may be questioned, since other areas are in better proximity to the community or to Port Valdez. In order to be developed for residential land use, significant population growth would be necessary - an unlikely eventuality without major new employment opportunities in the City. Thus, without the Alpetco project, it appears that little incentive would exist for development of any kind, including industrial use.

Although the site occupied by the refinery, tank farm and construction camp is large, it is also isolated from the rest of the community by

low hills along its southern boundary, by the Valdez Glacier Stream on the west, and by mountains to the east. This isolation serves to mitigate direct impacts upon adjacent uses. Construction noise at this location, for example, may have less impact on the community than at any other conceivable plant location in Valdez (see Section 6.5, Acoustic Environment for detailed discussion of noise impacts).

Scenic Impacts

Impacts on scenic features of development of the refinery and pipelines are judged to be very modest for a facility of this size. Because the refinery is located at the foot of mountains, some distance from public view, its tall elements will not block view of scenic features. The only significant ground view of the refinery from a public area is from the bridge over Valdez Glacier Stream on the Richardson Highway, illustrated in Figure 3.3-3. Views of the facility from the south are blocked by low hills and trees.

The marine terminal will be the most visible component of the proposed complex. As illustrated in Figure 3.3-4, it will extend a distance of 2,330 feet northwest into Port Valdez from a promontory east of Solomon Gulch. Views from the road of coastal areas across Port Valdez will be obscured by the trestle, which will have one level at approximately 50 ft. and another at 40 ft. above water level (see Fig. 3.3-5).

Since pipelines will be buried wherever alignments are open to view, visual impact will be limited to clearing of trees and brush. Revegetation can mitigate this impact.

Short-Term Impacts

The most important short-term, direct impacts upon surrounding uses will occur at the Robe River Subdivision, located south of the refinery site on the Richardson Highway. The primary access road and pipeline will follow an alignment which wraps around the subdivision along its north and east boundaries. Construction of the road and trenched pipelines are not expected to adversely affect land values or housing construction in the subdivision, because the area is likely to become a desirable housing location for permanent employees of Alpetco. Further, planned city improvements to roads and utilities in the subdivision should encourage additional housing development before the plant is operational. Residents of the subdivision will not be affected by construction of the refinery itself, since the Valdez Glacier Stream haul road, located west of the stream, will be used to move material from the construction dock to the site.

Of limited concern during the construction phase are the land use impacts of off-loading and storage of construction modules in the old townsite. Truck and tractor movements of material from the proposed new barge mooring slip to the mobilization yard (formerly used for pipe storage by Alyeska) and then to the refinery site will have transportation impacts which are discussed in Section 6.10.7. Land adjacent to the route between the construction dock and the refinery is largely undeveloped, so disruption to the few existing warehouse or industrial operations in the area is expected to be minimal.

SECONDARY IMPACTS

Secondary land use impacts include potential industrialization of land areas around the refinery site, demand for additional recreational opportunities and facilities (see Figure 6.10.6.2-1), and impacts on city planning functions in Valdez. An additional important secondary impact - the use of land for housing of Alpetco and other support employees and their families - is discussed in the following section 6.10.6.3.

Impacts On Industrial Land Use

Large areas of the City are available for industrial development. Areas presently zoned for industrial use include all of the old townsite and the airport, extending east to Valdez Glacier Stream, and most of the delta of the Lowe River (see Figure 5.8.5.6-3). Development of the Alpetco project would effectively enlarge the industrial zone, through the creation of a new Special Industrial Zone.

In anticipation of development of the Alpetco facility, the City has tentatively defined this new industrial zone of five contiguous panels totaling approximately 3,750 acres. The largest of these sites is for the refinery and tank farm, with a total of 1,425 acres. Portions of one of these sites, the old Alyeska pipeline storage yard located in old Valdez, is planned for lease by Alpetco as a construction module-staging area. Other sites will be used for such activities as gravel extraction.

The net effect of refinery development on land use would be to further encourage the creation of separate residential and industrial sectors in Valdez. With the exception of Robe River Subdivision, the entire area between the tidal flats and Robe Lake would eventually be zoned for some form of industrial development. Mobile homes and other housing in the Airport and Zook Subdivisions would gradually be phased out. At the same time, the new townsite and areas west of Mineral Creek could experience major residential development (see Fig. 6.10.6.2-1). While this separation of housing and industrial employment will produce greater dependance on the Richardson Highway linking the two areas, it could minimize any conflict between the basically imcompatible uses. Further, a huge industrial area would be created within which nearly any kind or size of industrial development could take place.

Recreation

Demand for recreational facilities will increase with construction and operation of the Alpetco project. Between 1980 and the peak construction year of 1982, the population of Valdez is expected to more than double, from 3,708 to 8,972 people (this increase includes population associated with city port development). In 1983 when the plant is operational, population is expected to drop to 6,009, increasing at 3 percent per year after that. Since no statistics on recreational use patterns are kept by Federal or State agencies which can be disaggregated for Valdez, and none are available from the City's Parks and Recreation Department, it is difficult to project impacts in quantifiable terms. Numerous improvements to parks and recreation facilities in recent years makes comparison with the period of Alyeska construction question-

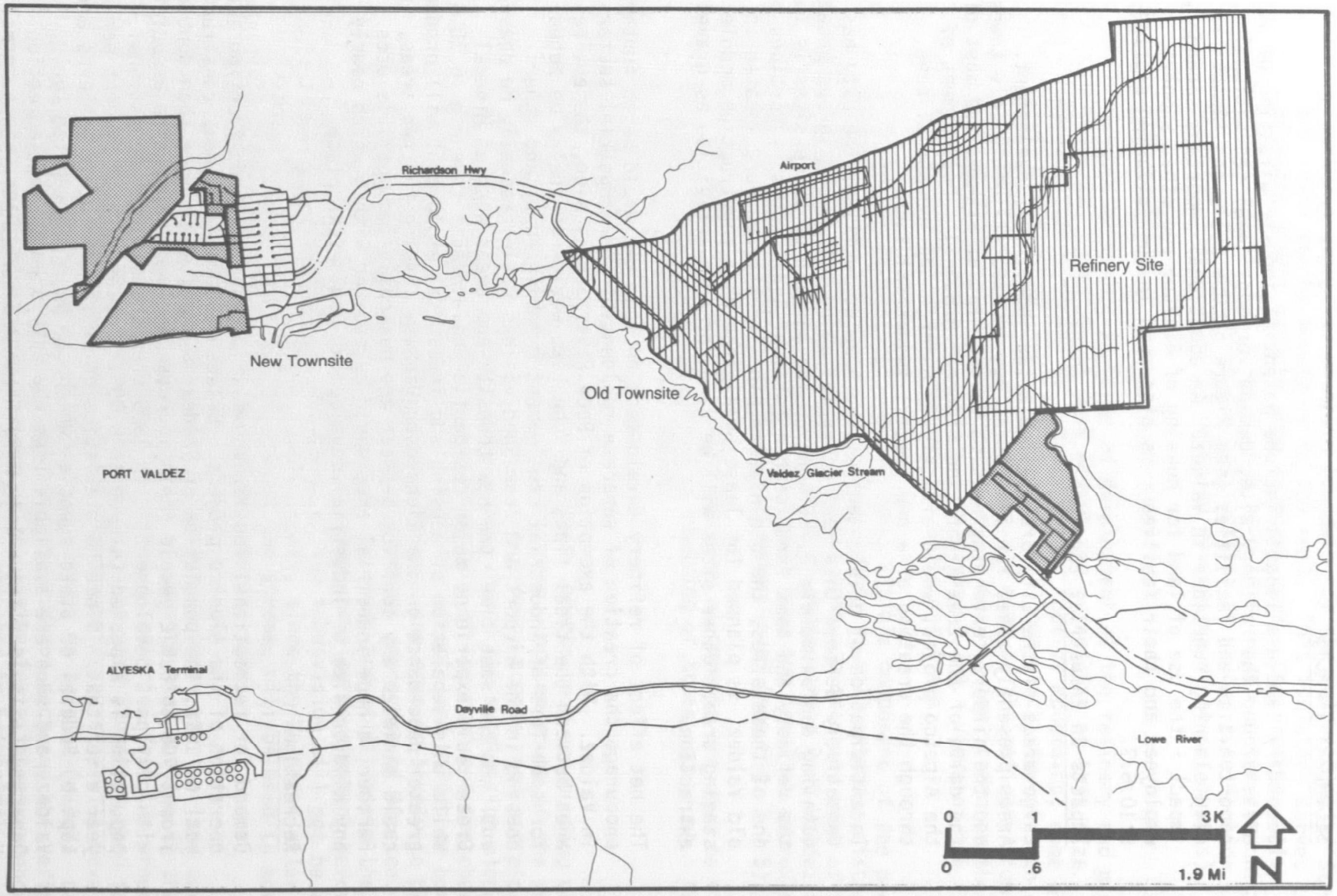

Projected Land Use Impacts

Possible Future Residential Areas

Possible Future Industrial Area

6.10.6.2-1

able, but certain experiences may be instructive. Recreational opportunities for construction workers in 1974-75 were largely confined to facilities provided by Alyeska and to bars in town. Alyeska provided a recreation hall with table games and movies. Taped television shows were shown within the camp and made available to Valdez residents by cable. Indoor athletic facilities were almost nonexistant.

Significant recreational opportunities now exist for Valdez residents. Coupled with indoor and outdoor facilities which are budgeted and planned during 1979 to 1985, the City will have recreational opportunities perhaps more numerous and diversified than any other city of similar size in Alaska. A full listing of proposed improvements by the Parks and Recreation Department is included in the appendix. It is reasonable to assume that the City will carry out its commitment to provide additional recreational facilities to meet demand associated with Alpetco development.

With respect to short-term impacts, some disruptions may be inevitable. During the pipeline era, some construction workers came to Valdez with no guaranteed employment or housing. Temporary housing was set up at recreational campsites in Valdez Glacier Campground and elsewhere - a situation which was tolerated because of the shortage of housing. To the extent that housing for Alpetco construction workers is not available in quantities sufficient to satisfy demand, some repetition of the Alyeska experience is possible. There could be conflicts with tourists in need of recreation campsites. An in-town camper park, planned for a location near the Small Boat Harbor, could help to alleviate overcrowding.

New population growth accompanying development of the Alpetco project will also increase usage of existing facilities and create demand for new facilities outside of Valdez. Boat ownership is rising in Valdez, as evidenced in recent expansion of the Small Boat Harbor, and plans for additional expansion of the harbor. The trend is likely to continue and to accellerate when the operational phase begins, and well-paid employees establish permanent homes in Valdez.

Proposals by the Alaska Division of Parks to establish marine parks at Anderson Bay, Jack Bay, and Sawmill Bay (see Figure 5.8.5.3-1) will receive added support from these new boat owners. The marine parks could include such facilities as docks, mooring floats, campsites and restrooms. However, the Forest Service is considering a restriction on the development of such facilities, under possible wilderness classification (U.S.D.A. Forest Service, Supplement to Draft Environmental Statement, Roadless Area Review and Evaluation, Juneau, June 1978). Recommendations for or against wilderness classification are expected by 1980. If implemented, conflicts between the desires of new boat owners and restrictions of the Forest Service are likely to increase.

Impacts on Land Use Planning

All of the City's basic planning mechanisms are presently undergoing major revisions. The new Comprehensive Plan, Coastal Management Program, Zoning Ordinance and Subdivision Ordinance are all due for completion before summer of 1980. This schedule could be postponed by final resolution of floodplain regulation issues imposed by the U.S.

Department of Housing and Urban Development (see Section 5.8.5.6). A delay in completion of these regulations could create procedural delays in the processing of permits and in the construction of housing and other facilities. Additional delays are possible in applications for numerous other Federal and State permits (see Section 10).

The Alpetco project development schedule calls for site work and clearing for the construction camp by fall or no later than December of 1980, followed by construction of the total nonpermanent facilities required to support the permanent construction effort. These nonpermanent facilities include offices, shops, warehouse buildings, access roads and bridges. Thus, many major design and engineering decisions will be made which require coordination and review by the City, at a time when its ordinances are still in the process of completion.

Plans are underway to expand the Planning Department to two full-time employees, who will assist in completion of the new regulations and in the review of applications. However, no additional impact aid has been requested by the City from Alpetco to mitigate impacts on planning or any other City function.

6.10.6.3 RESIDENTIAL LAND USE

This analysis of the effects of the Alpetco facility on residential land use is divided into a consideration of developed and undeveloped land available for new housing and factors influencing the production of housing.

LAND AVAILABLE FOR NEW HOUSING

When the Alpetco refinery becomes operational in 1984, housing for an estimated 708 new households will be required (see Table 6.10.1.1-5). Few of these families can be accommodated in existing housing in Valdez if its presently low vacancy rate (3.1 percent) continues or declines. Between 1984 and 1990, a total of 845 new households will be created by an annual growth rate estimated at 3 percent (see Table 6.10.6.3-1).

Therefore this housing will have to be built on now vacant land. The survey of housing in Valdez in May 1979 identified a total of 390 mobile homes and 370 single-family vacant lots. However, not all of these spaces and lots are available for these new households.

Few of the 390 vacant mobile home lots will be used for permanent housing. Because mobile homes are not regarded as a form of housing which is suited to the heavy snows and high winds of Valdez, the City is discouraging the construction of additional mobile home parks. Instead, the City is planning to gradually phase out mobile home parks by not renewing leases which will come due after the Alpetco construction period is over (Michael Schmidt, Planning Director, City of Valdez).

Of the single-family lots, it is reasonable to assume that most can be developed, but some will remain unbuildable because of such ground limitations as high water table and periodic flooding. It can also be assumed that planned sewer, water and road improvements to such areas as Robe River Subdivision will make existing platted lots easier to develop. Thus, nearly all of the existing 370 single-family lots are capable of development, but the availability of other, more desirable unplatted land will discourage the complete infilling of these vacant lots.

A total of approximately 965 acres of this vacant and private land is planned to become available for residential private development. Of the total, 640 acres of city land west of Hazelet Street are included (see Figure 5.8.5.5-1). The balance of 325 acres of private land includes residentially zoned property southwest of Hazelet Street, unimproved platted lots in Robe River Subdivision, and land north of the subdivision. This amount of land is sufficient to accommodate 3,850 housing units at a conservative density of four units per acre.

Areas that can be served by roads and utilities will be developed first. Listed below are areas within which some of the 845 new households required by 1990 can be accommodated. It includes both existing developments (where the 370 vacant single-family lots and the 389

vacant mobile home spaces were counted) and the vacant land areas discussed above.

SUBDIVISIONS WITH AVAILABLE LOTS

A. Mineral Creek Heights
This subdivision of 47 lots is located west of the Junior High School in New Valdez. Five lots have homes under construction. Prices are among the most expensive in the City, ranging between $23,000 and $39,500.

B. Robe River Subdivision
The subdivision contains 195 platted lots, of which 145 are presently served by constructed roads. These unpaved roads are being improved in the summer of 1979 with construction of roads to serve all platted lots, a total of 70 lots would be available for development. These lots will become more desirable for development when planned improvements to the sewer and water systems are made.

C. Alpine Woods Subdivision, Mile 10 Richardson Highway
This subdivision of 172 lots has 31 single-family houses and 31 mobile homes, leaving a balance of 106 undeveloped lots.

The subdivision has been beset with problems of poor roads, potential flooding, illegal siting of mobile homes in a single-family subdivision and development of one-acre lots zoned for five acres. Once the limits of the Lowe River flood plain have been firmly determined to the City's satisfaction, rezoning to the established one-acre zoning may be allowed. However, since no improvements to the domestic sewer and water system are anticipated, additional development of all lots at prevailing densities may be ill advised.

D. New Valdez - Tract A
This 25-acre block of City-owned land extends along the west side of Hazelet Avenue between Hanagita Avenue and West Pioneer Avenue. The City is developing a subdivision consisting of approximately 35 single-family and 10 duplex units, plus an additional 8 acres of multi-family housing, for a total of approximately 100 lots. The City will subdivide and sell blocks of lots to developers, who in turn will improve the lots and build homes. The total number of units represented by these improved, or soon to be improved, single-family subdivisions is 218 lots.

<u>VACANT LAND AVAILABLE FOR HOUSING DEVELOPMENT</u>

A. Land between Hazelet Street and Mineral Creek

In 1976 the Port Valdez Company platted a large area for residential, industrial and commercial development between Hazelet Avenue and Mineral Creek; a portion of the area was developed as the Black Gold Subdivision, but the remainder to the south has not been developed.

Development is possible in an area presently zoned RB-1, east and south of the Black Gold Subdivision and on a large hill running along the waterfront. The RB-1 zoned area could accommodate 325 multi-family units at maximum available densities. The steep-sided hill is zoned R-A allowing for 8,800 square foot lots - but would probably be developed as one-acre lots (Michael Schmidt). Approximately 150 lots could be developed at this density on the hill assuming 20 percent of the area would be used for roads. A total number of 530 single- and multi-family units could be accommodated in this area.

B. Land north of the Robe River Subdivision

North and west of the platted area of the subdivision approximately 180 acres of land are zoned for single-family residential use. The estimate of 180 acres considers use of a portion of land for the proposed Alpetco pipeline and access road rights-of-way. At an RA zone density of four units per acre, approximately 600 units could be accommodated. Prevailing densities of two units per acre in the Robe River Subdivision, however, would result in a more reasonable 300 single-family units.

C. City-selected land west of Mineral Creek

The City expects to receive patent in the fall of 1979 to 640 acres of land west of Mineral Creek. To reach the area from the east side of the creek, a bridge or bridges are planned to be built by the City at the extension of Hanagita Street and/or Egan Drive, serving housing and any necessary supporting commercial, park or school sites. It is estimated, however, that up to 500 acres may be subject to some flooding, according to the Department of Housing and Urban Development Flood plain study (U.S. Department of Housing and Urban Development, Federal Insurance Administration, Flood Insurance Study, City of Valdez, Alaska, Washington, D.C. 1976). Unless a dike is constructed to contain potential flooding, much of the area could be undevelopable. No estimate of the number of housing units possible in this area can be made at this time. The total number of units which could be developed on the open land, exclusive of the number possible in Area B, is approximately 830 units.

MOBILE HOME PARKS

Because of severe snow-loading and high winds in Valdez, mobile homes are not regarded as an appropriate "permanent" form of housing. Nevertheless, there are 485 mobile homes scattered among approximately 10 mobile home parks and subdivisions throughout the City. An additional 389 spaces served by utilities are presently available for additional mobile homes.

With the exception of the mobile homes sited at the corner of Robe River Drive and Meals Avenue in the northeast part of the old townsite, all other mobile home parks are on land leased by the City. These five- to ten-year leases will soon expire, but the City plans to

extend them during the construction phase of the Alpetco petrochemical complex. However, given the potential unavailability of enough traditional frame and modular homes to accommodate Alpetco employees and their families during the later operational phase, there may be continued reliance on existing mobile home parks for "permanent" housing.

The location of mobile home parks which are most likely to be utilized for the permanent Alpetco workforce is difficult to determine. It is probably reasonable to assume that few mobile homes or spaces would be used in the new townsite, while the Keystone or Kennedy construction camps would continue to be used until more permanent housing is available. However, the airport trailer courts are particularly vulnerable to high winds because they lie in an unprotected area.

PRODUCTION OF HOUSING

Of all community land uses, housing will be most affected by the Alpetco project. During the construction of the facility, a new population of 4,310 people will require temporary and permanent housing. During the operations phase, about 2,124 persons, representing approximately 708 households, will require permanent housing.* Given an existing vacancy rate of slightly less than 3 percent,** the City of Valdez faces a severe housing shortage. This section examines the impact of the Alpetco facility on housing during the construction and operations phases.

CONSTRUCTION PHASE

Of the 3,592 additional workers who will be in Valdez at the height of construction activity, approximately 2,820 will be directly employed by Alpetco; the balance of 772 represent secondary employment (see Table 6.10.1.1-2). Alpetco plans to house 90 percent of its workforce (about 2,538 persons) in temporary facilities on the refinery site.

City of Valdez officials have expressed concern about Alpetco's plans to provide on-site construction housing, citing the tendency of "temporary" housing to become permanent. The City prefers that workers fill existing vacant trailer spaces, especially those near the airport. If the City does permit Alpetco to place construction housing on-site, the City will require removal of the units immediately following completion of the project.

It is likely that the City will find it difficult to accommodate peak construction housing demand even if Alpetco is allowed to build on-site housing. Assuming that Alpetco builds housing for 90 percent (2,538 workers) of its peak construction workforce, the remaining 10 percent (282 workers) will require housing for the nine or so months that they

* Estimates of employees and numbers of households that will be generated by the Alpetco facility are taken from Table 6.10.1.1-2, found in Section 6.10.1.1 Population and Employment - Local.

**For discussion of the vacancy rate in Valdez, see Section 5.8.5.8 Residential Land Use.

will be employed. Alyeska's Terminal Camp is an existing facility suitable for housing workers, but no agreement for its use has been made between Alpetco and Alyeska. These workers could be housed in additional on-site trailers. Housing these workers on site would remove them from competing with an additional 772 workers and their dependents (for a total of 926 people), holding secondary or residual employment, who will rent the few vacant units that are available in town or will bring their own trailers or mobile homes to the area.

Given this situation, Valdez's present supply of 390 trailer and mobile home spaces will quickly fill and additional spaces will have to be developed. Further, there will be demand for permanent housing, such as apartments and single-family houses, either for rent or purchase. Particularly near the end of the construction period, the demand for permanent housing will increase, as people employed in construction or secondary jobs decide to make Valdez their home.

OPERATIONS PHASE

At the start-up of the operations phase of the Alpetco facility in 1984, Valdez will already be in the midst of a housing shortage. In all probability this shortage will take the remainder of the decade to remedy. Demand for new units and factors limiting the production of units are discussed below.

Demand

Approximately 708 new housing units will be required at the beginning of the operational phase. Some mobile homes vacated by construction workers will be available, but essentially no vacant apartment or single-family units are anticipated. Demand will continue at a rate of 3 percent or approximately 20 units per year after 1984 (see Table 6.10.6.3-1). Thus, new housing will have to be produced for nearly all of the 708 projected new households.

Independent of the demand for new housing caused by the construction and operation of the Alpetco facility, there exists in Valdez a latent demand for new housing. Valdez residents, responding to a questionnaire in 1976, indicated that a wider choice of housing types and location was the third most important community goal.* This attitude is reflected in the desire of many residents of mobile homes to purchase more permanent housing units.

Policies of the City of Valdez also affect the demand for new housing. One policy of the City is to make more publicly owned land available

*Alaska Department of Transportation Planning and Facilities, Prince William Sound Regional Transportation Study-Draft, (Anchorage, 1978), p. 6-15. According to the questionnaire, the most important community goal was "improving access between Valdez and other parts of the State" followed by "promoting the growth of businesses and jobs."

for development. To achieve this goal, the City can act as a packager, selling land to developers it has selected. For example, Tract A, bounded to the north by Hanagita Street, to the east by Hazelet Avenue and to the south by West Pioneer Drive, has recently been selected by the City for development. Opening up new land with various ammenities for residential development will likely induce some homeowners to sell their existing units and purchase new ones.

Under consideration by the City is a proposal (which would affect the demand for housing) to phase out trailer parks on City land once construction of the Alpetco facility has been completed. The City holds leases on some lands used for trailer and mobile home parks, which will come due in upcoming years. The City may choose not to renew these leases and convert the land to other uses. Land occupied by trailer courts adjacent to the airport, for example, is zoned for and would be suitable for industrial use. In this case, the likelihood of such conversions would depend upon demand for industrial land and availability of replacement housing.

Prevailing interest rates also influence the demand for housing. Although mortgage money is available in Valdez, interest rates are sufficiently high to discourage home ownership. A typical loan for a single-family unit in Valdez is $90,000 at an interest rate in July 1979 that varied between 11.50 and 11.75 percent (Gail Cipra, Assistant Cashier, Branch Loan Coordination, National Bank of Alaska, Anchorage). However, the prevailing rate of interest in Valdez is not significantly higher than elsewhere in Alaska.

To make housing more available to potential homeowners, both the Alaska Housing Finance Corporation and the City of Valdez have sold tax-exempt mortgage subsidy bonds. Because the income from the bonds is free from Federal and State taxation, the bonds can be sold at comparatively low interest rates, and the mortgages they finance are several percentage points cheaper than the rates charged by taxpaying sources of mortgage funds. The buyers' monthly payments are passed along to the bondholders. The Housing Finance Corporation sold $105 million in bonds in June 1979, an amount that will be exhausted by the end of the summer. Under its program, mortgage money is provided to 90 percent of the sales price or appraised value, whichever is less, up to a maximum of $90,000 (Carol M. Beaudion, Manager, National Bank of Alaska, Valdez). In Valdez and several other Alaska communities no income limitations are placed on participants in the program.

The future availability of mortgage subsidy bonds to meet local housing demand is seriously in doubt as a result of a bill introduced on April 25, 1979 by Congressman Al Ullman (Oregon-Dem.), Chairman of the House Ways and Means Committee. The bill proposed to abolish tax exemption for almost all such bonds. The introduction of this bill has effectively halted, at least temporarily, the use of this device; if the bill is passed, below-market interest rates made possible by the sale of mortgage bonds would not be available anywhere in the country.

Under the terms of interim rules authorized by the House Ways and Means Committee, the City of Valdez hopes to sell $12 million of bonds in August 1979. This sale would make available to Valdez residents 8.4 percent mortgage money, a rate about 3 percent below that offered by conventional lenders. Of the $12 million, approximately $6.6 million is earmarked for use by employees of the Alyeska Pipeline Service Company to purchase 73 modular units in the Black Gold Subdivision. The remaining $5.4 million will be available to other Valdez residents for the purchase of single-family houses. Under the terms of the bond sale agreement, these monies must be committed within two years; however, it is anticipated that the monies will be committed within six to nine months (Paul Arnett, First Southwest Company, Anchorage).

Another factor affecting the demand for new housing will be the ability of the operations personnel to purchase it. It is reasonable to assume that Alpetco, in order to attract and maintain its workforce, will pay its employees a wage sufficient to own or rent housing in the community. Further, many households will have two wage earners, with the second wage earner either also employed by Alpetco or employed by one of the secondary businesses induced by the operation of the Alpetco facility.

Demand for new housing will also result from the growth of the existing Valdez population, independent of the Alpetco project. Between 1979 and the end of 1983, based on a projected annual growth rate of 3 percent, Valdez will have an additional 400 persons or 133 households that will require housing.

Production

The production of housing to meet the demand will be complicated by several factors. The most significant factor is the shortness of the time period in which the housing must be produced. With the start-up of operations of the Alpetco facility in 1984, an immediate demand will exist for approximately 708 dwelling units. While it is likely that some new units will be built in 1982 and 1983 to house while collar and managerial personnel working on the construction of the Alpetco facility, these units are expected to satisfy only a minute portion of the demand that will appear in 1984.

The availability and productivity of builders are additional factors that will affect the production of housing. Because Valdez lacks local, large-scale builders, developers will likely be drawn from Anchorage, Fairbanks, and Juneau to construct the needed housing units. It is unreasonable to believe that these builders will construct housing much in advance of the actual arrival in Valdez of Alpetco operations personnel. From the perspective of these developers, the risk and expense of constructing new units in anticipation of future demand would be unjustified. Consequently, the effort to meet the demand for new housing will probably begin in 1984 and continue for several years. Valdez will experience a housing shortage until the new units are completed. In the meanwhile, workers will either reside with their families in temporary quarters (trailers or mobile homes)

or will house their families in Anchorage or out of state until permanent housing in Valdez is available.

Another aspect of housing supply is that of meeting all segments of the housing market, particularly housing that moderate income families can afford. To date, multi-family housing has not enjoyed broad acceptance in Valdez. The developer of the City's only condominium project, for example, was unable to sell any of the units and is renting them instead. Because of the appeal of single-family units in Valdez, it is projected that about 80 percent of the total 708 units required will be aimed at that market. The remaining 20 percent will likely be multi-family rental units, available to Valdez residents unable to afford or uninterested in owning single-family housing.

Both the private and public sectors must take actions to facilitate the production of new housing units; only about half of the projected demand for new housing in 1984 derives from the housing needs of Alpetco employees. The demand for the remaining new units arises from secondary and residual employment made possible by development and operation of the Alpetco facility. Thus, although Alpetco plays a major role in creating a demand for new housing, other economic forces will serve to increase that demand. Actions that would help mitigate the severity and duration of the housing shortage are discussed in Section 6.10.10, Mitigation Measures.

In concluding the discussion of impacts upon residential land use and housing, it is important to note that there would be severe economic disruptions for some people if the Alpetco project did not proceed as planned. For example, the purchase of houses and land for permanent homes has accelerated in recent months as residents anticipate higher prices and less housing choice when the project gets underway in 1980. The new businesses that have opened in town would presumably be similarly affected by withdrawal of the Alpetco project at this point.

TABLE 6.10.6.3-1

Demand for New Housing 1984-1990[1]

(Assuming Alpetco)

Year	Incremental Number of Units	Total Number of Units
1984	708[2]	708
1985	21	729
1986	22	751
1987	26	773
1988	23	796
1989	24	820
1990	25	845

Source: CCC/HOK.

(1) Assumes 3 percent annual growth rate.

(2) See Table 6.10.1.1-2.

6.10.7.1 LAND

CONSTRUCTION

In general, construction activity can be expected to be most concentrated during the summer months when weather and daylight conditions are at their best. Traffic conditions will be worsened along the Richardson Highway, both by slower-moving construction traffic, particularly during pipeline and products dock construction, and by trucks and construction traffic crossing the highway at the Glacier Stream Haul Road and at the Dayville Road. At the Glacier Stream Haul Road many of the crossing trucks will be slow moving, particularly if carrying prefabricated sections. This will create potential conflicts with the traffic on the Richardson which has a high average speed over this section. During the summer season, many travelers will be tourists and unfamiliar with the local construction traffic.

Truck-induced damage to the Richardson should be limited to that section between the Glacier Stream Haul Road and the Dayville Road, and on the Dayville Road up to the marine terminal location. Truck damage may be expected to be particularly severe to the Richardson at the Glacier Stream Haul Road crossing point.

Due to the local nature of the Alpetco project, major increases in traffic during the construction period are not expected on the Richardson Highway east of Valdez, that is, inland. While some increases may be expected, they will probably be limited to the early and late parts of the construction period as construction vehicles are brought into and out of the area.

Alpetco anticipates a balance in cut and fill earthmoving operations on the refinery site. As the Valdez Glacier Stream will also provide a local source of gravel material, minimal off-site earthmoving operations are anticipated. No landfill or disposal areas have yet been designated for any off-site movements that might occur.

Alpetco projects a total of 143 construction vehicles being utilized (excluding buses, ambulances, and earthmoving equipment). Of the projected inventory, approximately 55 percent will be of five or more axles (flatbed, winch trucks, and tractor units). The remaining vehicles will most probably be split equally between two and three/four axle combinations.

As the majority of construction materials will be shipped into the new construction docks that will be built south of the Crowley-Weaver docks, and will be destined for the refinery site, these two areas will probably account for a large proportion of inter-site movement.

Based on the volume of construction materials projected by Alpetco, and assuming an average truckload of about 10-15 tons, it is estimated that an average 30-50 truck trips (15-25 round trips) per day will be necessary to move these materials to their final destinations, over a two-year period from mid-1981 to mid-1983. This excludes the prefabricated units. It is anticipated that much of this activity will be by five-plus axle trucks.

Much of this traffic will cross directly over the Richardson on the new construction road, with two principal exceptions. Alpetco plans to ship some nonbulky and nonheavy materials through the city dock. No estimates of volume are currently available, but trucking activity between the docks and the plant would impact the Richardson Highway.

The other exception will be the hauling of construction material for the pipelines and the marine terminal, which will impact both the Richardson and the Dayville Road (between mid-1981 and the end of 1982). As these roads are State roads, trucks will be subject to weight and size limitations described in Section 5.8.6.1 of the EIS.* As the weight limitations are particularly stringent during the spring breakup, hauling of heavy construction materials on these roads will need to be scheduled around the spring period.

Certain components of the refining plant will be constructed outside of Alaska and then shipped as prefabricated units into the new construction docks. It is currently estimated that about 80 to 100 units will be shipped in this fashion. The projected weights of these prefabricated units range between 40 and 100 tons, with the exception of one unit which may weight up to 500 tons. The units will require special transporters and will all be destined to the main refinery site. They will, thus, be transported along the proposed construction road and will not need to be carried along the Richardson Highway.

The planned on-site construction camp will considerably reduce personnel movement in the area. Buses will transport workers from the camp to off-site activity areas. Considering the self-contained nature of the construction camp, and the projected long working hours, the majority of workers will not visit Valdez regularly or on a daily basis. Over the length of the construction period, local Valdez residents on the workforce traveling to the construction site, and worker movement between the camp and Valdez is expected to add an average 400-800 daily vehicle trips to the Richardson Highway, with probably 100-250 of these occurring in the peak hour.

OPERATIONS IMPACTS

The Alpetco project would directly generate an estimated additional 1,350-1,400 (one-way) vehicle trips per day, of which about 400 or almost 30 percent would occur during the peak hour (sometime between 3:00 to 5:00 p.m.). Less than 10 percent of these trips would be truck trips, and the majority of these would be delivery trucks. Direct truck impact on the Richardson may be considered as negligible.

Following construction completion, the Glacier Stream Haul Road will be paved, and will function as the main access road to the plant. All traffic originating at or destined to the refinery will use this access route. It is anticipated that the Glacier Stream Haul Road would be stop-sign controlled at its intersection with the Richardson Highway.

*Truck movements between the construction docks and the refinery site will only cross the Richardson, not travel along it, and will, therefore, not be subject to weight/size restrictions.

A service road will be provided, running south from the plant to the Richardson Highway at the Dayville Road intersection. This intersection will be converted from the existing three-leg to a four-leg layout. The access road, which will probably be unpaved, will run adjacent to the crude and product pipelines from the plant. The road will be used as an emergency access, and pipeline service road only. It is anticipated that a locked gate will be placed across the access road at the Richardson Highway to prevent use of the road by general traffic.

The majority of Alpetco directly generated traffic will impact the Richardson between the site main access and the new Valdez townsite. Based on the projected geographical location of employee housing (see Section 6.10.1 Population and Employment) only about 20 percent of employee trips (200-250 vehicle trips per day) would be destined east of the refinery site on the richardson Highway (approximately 10 percent would travel to the Alpine Woods and Nordic Subdivisions, while 10 percent would travel only as far as the Robe River Subdivision). The remaining 80 percent of employee trips, and virtually all truck trips, would be destined west on the Richardson Highway to the new Valdez townsite. An estimated 60 percent of employee trips, or about 700 vehicle trips a day, would travel through the existing townsite to new home locations between Hazelet Avenue and Mineral Creek. Secondary traffic impacts arising from the Alpetco facility will be based on two elements: nonwork-based trips by Alpetco employees and dependents (shopping, personal business, recreation, etc.) and the travel demands of the secondary and residual population increases projected for Valdez as a result of the Alpetco facility.

Much of the secondary induced increases in travel will be in the new townsite, and the impact will be diffused over all of the streets (total traffic increases would probably range between 50-70 percent, in line with the projected total 70 percent population increase). Secondary traffic increases may also be expected along the Richardson Highway.

Table 6.10.7.1-1 summarizes the total traffic projected on principal roads in the area with the Alpetco plant in operation. Comparison is also made in the table to current (1979) traffic volumes and also volumes expected without the project.

Total traffic increases between the new townsite and the refinery could range between 2,000-3,000 vehicle trips a day. Average daily traffic (ADT) on the Richardson Highway at the Department of Transportation offices, for example, would be increased from 7,300 to 9,500-10,500 vehicles. To the east of Dayville Road, total traffic impact on the Richardson Highway will be lower; the majority of the traffic increase being related more to the secondary population base than directly to the refinery itself.

Traffic conditions during much of the day should remain at level of service B along the Richardson Highway (see Section 5.8.6.1 for description of traffic levels of service). While much of the secondary based trips would be evenly spread throughout the day, trips generated directly by Alpetco will be highly peaked due to the workforce base.

TABLE 6.10.7.1-1

TRAFFIC VOLUME SUMMARY - AVERAGE DAILY TRAFFIC

HIGHWAY	CURRENT ADT (1979)	1985 ADT PROJECTIONS WITHOUT ALPETCO (1)	1985 ADT PROJECTIONS WITH ALPETCO (2)
Richardson (between plant and Valdez)	5,225	7,325	9,500-10,500
Richardson (east of plant and Dayville Road)	4,325	6,050	7,000- 8,500
Dayville Road	1,925	2,050	2,250
Richardson (Ernestine and beyond)	495	975	1,275

Notes:

(1) Based on traffic growth assumptions described in Section 5.8.6.1.
(2) Includes both traffic generated directly by Alpetco (work trips, service trips, etc.) and secondary traffic generation (travel of secondary population, etc.). See text for further details.

Peak-hour trips on the Richardson Highway between the plant and the new townsite are estimated to increase from 500 to 950-1,100 vehicles per hour (compared to an estimated capacity of about 1,700 vehicles per hour). This section of the Richardson Highway would thus suffer a reduction in traffic levels of service conditions from B to C/D during the peak hour. East of Dayville Road, peak-hour traffic volumes are estimated to increase from 450 to 550-600 vehicles per hour (about 35 percent of hourly roadway capacity). Traffic conditions would remain at level of service B during the peak hour.

Over the longer term, the traffic increases produced by both the Alpetco project and the associated population increases, would necessitate more frequent road maintenance procedures. Responsibility for road maintenance and operation rests with the State Department of Transportation and Public Facilities.

Truck traffic will be negligible between the refinery and the marine terminal on the Dayville Road, vehicular trips between the plant and the marine terminal being limited to personnel movement. Daily traffic on the Dayville Road is projected to increase from 2,050 to 2,250 vehicles a day with estimated peak hour volumes increasing from 150 to 200 vehicles per hour. At these low volumes, such an increase would not significantly impact overall traffic conditions.

In the regional setting, it is estimated that a total of about 300 daily vehicle trips will be added to the Richardson Highway beyond Ernestine (based on an historical analysis of traffic volumes on the Richardson at the Ernestine Maintenance Station, 70 miles north of Valdez, as compared to Valdez population levels). This would increase average daily traffic at Ernestine from 975 to 1,275 vehicles, and peak-hour traffic from 75 to 105 vehicles per hour. Such an increase would have a negligible effect on traffic conditions.

6.10.7.2 AIR

CONSTRUCTION

While it may reasonably be expected that air transportation will be impacted during the 2.5-year construction period of the project, the increased demand for air services that will occur during that time is quantifiable only to a limited degree. Some indication of the likely impact can be gained, however, by reviewing the types of demand that will be placed on the air transportation system, and also the experiences of the last construction boom cycle during the pipeline and terminal projects. The various types of increased demand will be as follows:

CONSTRUCTION WORKFORCE ARRIVING AND DEPARTING VALDEZ

From mid-1980, the construction labor force in Valdez will build to a peak of about 2,800 persons by late 1982, and decline to zero by the end of 1983. Inflow and outflow of personnel will vary during the construction period, with workers not necessarily arriving immediately after available work contracts. In order to assess seasonal impacts, construction labor force travel has thus been estimated on

a quarterly basis (using Alpetco labor force projections). The maximum quarterly arrivals will range between 150-550 passenger trips, peaking in early 1982. Maximum quarterly departures will range from 100-900 passenger trips and will be concentrated in the first half of 1983. These rates constitute between 5-10 percent of the existing average quarterly air passenger capacity between Valdez and Anchorage. Current occupancies are running at about 55 percent of capacity in the winter quarter, and 60 percent in the summer quarter.

SITE VISITS BY TECHNICAL AND SPECIALIST STAFF, ALPETCO, NON-ALPETCO BASED

The greatest increase in demand for air passenger services is likely to be generated by support and ancillary services during the construction period. This will include both Alpetco and non-Alpetco staff, and will comprise engineers, technicians, and specialist skilled personnel assisting in various aspects of construction work. It will also include supervisory staff of firms producing components for the plant. Based on the projected construction schedule, the majority of these trips will take place between mid-1981 and the end of 1982.

ASSOCIATED AIR FREIGHT TRAFFIC

It may be expected that light equipment and supplies will also be flown into Valdez. Much of the specialist construction crews will probably carry their equipment with them, and it is probable that some subcontractors might charter aircraft for the trip to and from Valdez. Bulkier freight might require freight-only flights to be made by air carriers.

Increased air traffic during construction will impact two elements of the air transportation system: the air carriers themselves and the Valdez Airport. The air carriers have in the past demonstrated a substantial ability to vary service capacity in response to changing demand. With respect to the Alpetco construction period, while the exact demand for air services cannot be projected, it seems unlikely that Alpetco-based activity will reach pipeline levels, as the pipeline project included both the Alyeska terminal and the southern portions of the pipeline. Thus, while at the peak of pipeline construction in 1976, the principal air carrier provided a total service seat capacity four times existing levels, a somewhat lower increase in service would probably be necessary for the Alpetco project. In discussions, all three air carriers indicated a capability and desire to expand existing service where necessary to meet increased demand. Any expansion of service capacity would probably be based, at least initially, on the use of larger aircraft (up to 18-seaters), before schedules were intensified. It is unlikely that 727 jet service will be necessary, although the advantage of a 727-size aircraft is that demand surges can be more readily accommodated than by the smaller aircraft.

Valdez Airport should be capable of absorbing increased flight operations (a flight operation is defined as either a takeoff or a landing) that will result from any increased schedule and charter flight activity from Alpetco construction. Current airport operations total about 19,000 a year. The likely maximum increase would be that experienced

during pipeline activity when the airport absorbed a doubling of annual flight operations, from 14,000 in 1975 to 28,000 in 1977. This was still considerably below the estimated capacity of 100,000-200,000 a year. It is doubtful that such a doubling would occur with the construction of the Alpetco facility, and the probable maximum annual operations would be between 30,000-40,000. The airport will also be better equipped to handle increased demand than during pipeline days. Since then the passenger terminal has been constructed, and the planned runway lighting and navigational aid improvements will enable better flight operations scheduling, and reduce the potential for service blockages or bunching, particularly in winter.

PLANT OPERATIONS IMPACTS

The Alpetco facility could lead to a direct increase in air passenger demand of about 5,000 additional trips per year, compared to the estimated existing demand of about 28,000 passenger trips per year on the three commercial carriers, or a 20 percent increase. The secondary and residual population elements projected for Valdez as a result of the Alpetco plant could generate an additional 5,000-8,000 yearly trips. The overall impact in terms of air passenger demand would probably be a maximum of between 10,000 and 13,000 annual trips, or a 35-45 percent increase over the current level.

Without additional service provision, the average planeload factor would be close to 100 percent with demand exceeding supply on peak occasions. In order to avoid turnaway situations, either service frequency or average plane capacity would have to be increased. From discussions with the carriers, it seems probable that the increased demand would lead the carriers to provide a more economic service by utilizing 18-seater planes. If this were the case, existing schedules would probably be reduced somewhat to avoid overprovision of capacity.

The upper end of the projected range of increase in demand would result in the average passenger flow through Valdez Airport during the summer being increased from about 125 to 175 passengers a day. This would not be sufficient to justify the introduction of jet service.

Thus, while there will also be increases in charter and private aircraft activity, the increase in operations (takeoffs and landings) at the airport will be considerably below the projected increases in air passenger traffic. It seems unlikely, from a 1978 base of about 20,000 operations a year, that by 1985 with the Alpetco plant in full operation, the number of airport operations at Valdez would exceed 30,000 a year. This is well within the capacity of the airport.

It is anticipated that the impact of increased air passenger traffic, generated by the Alpetco facility, on national and international commercial air services out of Anchorage will be negligible.

6.10.7.3. MARINE TRANSPORTATION (ON-SHORE ELEMENT)

ALASKA MARINE HIGHWAY

Impacts on the Alaska Marine Highway System during project construction will probably be small. It is doubtful that the construction workforce would have the time to take the ferry trips across Prince William Sound. Columbia Glacier sightseeing tours can be made independently from Valdez, and workers destined for Anchorage will most likely fly as it will be considerably faster.

The Marine Highway System would not be used for freight for Alpetco construction purposes, or during operations phases either. The essentially localized nature of the Alpetco construction project will probably not reduce tourist ferry patronage as was the case during construction of the pipeline when a much longer section of the Richardson Highway was affected, thus discouraging tourist traffic slightly.

Impact on the Marine Highway System during operations of the project will be minimal, particularly as traffic on the system is largely tourist-based. Direct impact from the refinery itself will be nil. Secondary impacts may be created from the general population increase brought about by the project.

The Prince William Sound Regional Transportation Study estimated that both passenger and vehicle capacities on the Valdez-Whittier route will be reached by 1980-1981, based on current rates of demand increase. The system would thus be operating at capacity well before the Alpetco plant became fully operational. Use of the system by the Alpetco-based population would be possible only by early planning and making reservations well ahead, or if service were increased. As discussed in Section 5.8.6.3, the State currently has no plans to increase service on this route.

The Valdez-Cordova route would have surplus capacity available for any increased usage of this run, although such increases would be minimal.

VALDEZ CITY DOCK

Alpetco plans to use city dock facilities during the construction period for nonbulky and nonheavy materials. No estimate of likely volumes is available at this time, although it is anticipated that any such materials would be shipped on existing barge service and would not require additional vessels.

During operation of the refinery, direct impact on the city dock, other than the low level of truck usage specified in Section 3.5.5.1 (20-25 truckloads per day), would be low and irregular. As the Alpetco marine terminal will not be built to handle regular cargo functions, and the new construction docks will not be maintained once the refinery goes into full operation, any maintenance/parts supplies shipped into Valdez will have to come through the city dock. Such shipments would probably not occur on a regular basis, however.

6.10.8 UTILITIES SYSTEMS

This analysis is focused upon the ability of the utilities systems in Valdez to accommodate the future urbanization that will result as a direct or indirect consequence of the construction of the proposed Alpetco petrochemical facility.

6.10.8.1 SEWER SYSTEM

Alpetco will be responsible for the construction and operation of an industrial sewage treatment plant. This plant will treat industrial wastes as well as storm water runoff within the tank farm areas.

The City will construct a sewage trunk line that will extend from the Alpetco site to the Valdez sewage treatment plant at the old townsite (see Figure 5.8.7.1-1). The trunk line will transport approximately 250,000 gallons of sewage per day from the construction camp housing area and from all personnel washrooms, lunchroom and other facilities. After start-up of the plant, it would serve the permanent plant facilities.

At a yet undetermined point along its route between the Alpetco site and the Valdez sewage treatment plant, the sewer trunk line will be intercepted by a lateral line serving Robe River Subdivision. The provision of sewer service to Robe River would diminish problems of well contamination caused by the proximity of wells and septic tanks. At some future point it is probable that the subdivision will have city water service as well.

The Valdez waste water treatment plant has adequate capacity to accommodate domestic wastes from the Alpetco facility and from Robe River Subdivision. The Public Works Director believes that the additional waste content will enable the plant to operate more -not less - efficiently because it will help offset the diultion of effluent by the new townsite area's high water use. Regulations that now require that newly laid water pipe either be insulated or buried at a depth sufficient to prevent water line freeze have kept domestic water consumption from increasing during winter.

6.10.8.2 WATER SYSTEM

Seventeen exploratory wells drilled by Alpetco in June 1979 indicate sufficient water to meet the on-site requirements for both industrial and domestic uses. The discussion of the on-site industrial uses of water can be found in Section 5.2.2 Groundwater Hydrology.

The focus of this discussion is an examination of the impacts of Alpetco-induced population growth in Valdez on the City's existing and proposed water system.

The demand for housing for permanent Alpetco employees will encourage development of new areas of the City. Section 6.10.6 identifies probable areas for future housing. Selection of areas to develop

first will in part depend upon the availability of water service. As is discussed in Section 5.8.7.2, Valdez, which is underlain by an aquifer, is assured of an abundant supply of water. Consequently, the source of water is not as important in determining future patterns of urbanization as the capital costs of distributing water to serve new residential areas.

The 600-acre area west of Mineral Creek is planned for future urbanization. The City anticipates no great constraints in providing water service there. Once the groundwater situation of this area has been examined, the City will decide whether to develop an independent water system or one that is connected to the existing system east of Mineral Creek. If it is decided to connect the two water systems, water service to the area west of Mineral Creek would be provided by a utilidor that would tie into the Alyeska housing water main and would cross Mineral Creek as part of a new bridge. Bridge crossings of Mineral Creek will likely occur at Egan Drive and/or Hanagita Street.

Another area potentially suitable for residential use is located at 5.6 Mile. This site, located 10 miles east of new Valdez, comprises 480 acres on the bench of a mountain. The site is characterized by exposed rock and probably is not condusive for wells. A cistern or other method of water storage would have to be developed to support residential uses.

6.10.8.3 SOLID WASTE

The City Engineer estimates that at the present rate of usage, the landfill site at the old townsite can be used for another four years; with the Alpetco project underway, the site will reach capacity in two years.

The City has commissioned a study by Woodward-Clyde/GEZR to estimate future solid waste loads, including the disposal of sludge from the Valdez sewage treatment plant and wastes generated by the Alpetco facility; to recommend an appropriate waste disposal system; locate and evaluate recovery and disposal sites; review existing environmental regulations; and to identify funding sources. The study is scheduled to be completed by the end of 1979.

6.10.8.4 ELECTRICITY

The Copper Valley Electric Association (CVEA), as noted in 5.8.7.4, is expanding its capacity, independent of the proposed Alpetco facility. The cornerstone of that expansion is the Solomon Gulch Hydroelectric Project, supplemented by the installation of a pressure-reducing turbine in the trans-Alaska pipeline.

If construction of the Solomon Gulch Hydroelectric Project is delayed beyond its current mid-1981 completion date, CVEA would be hard pressed to meet the additional demands placed on the system's capacity by the construction phase of the project. The CVEA Manager of Electric Operations estimates that at the peak of construction activity in 1982, construction trades employees will create a demand for 3-4 MW

and that Alpetco's construction power requirements might be in the range of .3 MW. This total Alpetco-related demand of 3.3 to 4.3 MW, when added to a 1979 peak demand of 3.9 MW, equals or exceeds CVEA's firm capacity of 7.3 MW. The Solomon Gulch project will add approximately 12 MW of capacity, except in March and April when reduced water flows due to cold temperatures might reduce capacity to about 6 MW. An additional source of power could be the Glennallen electrical system which, by means of the proposed transmission line connecting Glennallen and Valdez, could make available 6-7 MW to Valdez.

On-site power for the operation of the petrochemical plant will be generated by equipment owned and operated by Alpetco. As a result, operation of the Alpetco plant will have no impact on the CVEA system.

6.10.9 LIFE-STYLE AND CULTURE

LIFE-STYLE

The rapid industrial and population growth resulting from the construction and operation of the Alpetco project will disrupt and alter the life-style of Valdez. Many of the impacts that Valdez will experience as a result of the Alpetco project will be reminiscent of those the community experienced during the pipeline era: Valdez will face a severe housing shortage; the provision of social services will be strained; tensions will exist between construction workers and older residents of Valdez; and the small town qualities of Valdez will be further eroded.

However, Valdez officials and residents face the construction phase of the proposed Alpetco project with a confidence gained in overcoming the inconveniences and problems arising from the construction of the Alyeska pipeline and marine terminal. Because the community anticipates that the impacts of the Alpetco project will be less severe than those of the pipeline boom, their confidence will likely serve as a buffer, diminishing whatever problems do occur.

Other factors that will diminish the Alpetco-induced impacts on the existing life-style of Valdez include:

1. Valdez's present population (at 3,350) is three to four times greater than it was prior to pipeline construction activity. This greater population base will be better able to absorb short-and longer-term impacts.

   Since the manpower requirements of the proposed Alpetco project will be smaller than were those of the Alyeska pipeline and marine terminal, its impacts will be less. At its peak, the Alpetco project will employ 2,820 workers, while construction of the pipeline and marine terminal employed about 4,500 workers.

   Consequently, as compared to the pipeline era, Valdez will have a larger population to accommodate lesser impacts.

2. Valdez offers a greater array of public services than it did prior to the pipeline and, therefore, is better able to respond to demands for services.

3. Utilities have excess capacity, a situation that did not exist during the pipeline era. The excess capacity will enable the City to more quickly extend services to areas slated for development.

4. Although Valdez will experience a severe housing shortage in the short-term, the City will be better able to influence long-term land development patterns because of its new array of land use controls - a new zoning ordinance, new comprehensive development plan, a coastal zone management plan and other planning tools, which are expected to be in effect prior to construction of the Alpetco facility.

5. Valdez has adequate financial resources to cope with whatever demands are placed on its services and facilities. Unlike the pipeline era, Valdez is not now dependent on the State for impact aid.

While the Valdez life-style will persevere, it will be affected by the Alpetco project. Growth in population will further the loss of Valdez's small town flavor. Higher density living and crowding, in some cases, will be a fact of life in Valdez until housing supply catches up with the demand created by the Alpetco project.

Population growth may increase pressures on nearby recreational resources. Possible overcrowding may occur at nearby fishing spots and trails.

Other evidence of an erosion of small town attributes may be reduced access of residents to public officials and the imposition by local officials of formal administrative procedures where none existed before.

While a growth in population might cause Valdez to lose some valued characteristics, it might also enhance other aspects of community life. A larger population will increase the diversification of Valdez's business and social life. Retail activity will increase and become more specialized: Valdez will have greater shopping selection and more restaurants. Valdez residents believe that with a bit larger population the community will have more recreational opportunities including a bowling alley and movie theater.

Changes in housing patterns will also affect community life. During the pipeline era, employment tended to determine housing patterns - State Department of Highways and Harborview Development Center employees lived in the State Trailer Court; Alyeska employees lived in their own subdivision. With the number of vacant lots, lots capable of development, and undeveloped areas suitable for residential use that now exist in Valdez, it is likely that houses or multifamily units purchased or rented by newcomers will be fairly equally distributed throughout the City. This integrated housing for Alpetco operations personnel will tend to promote interaction and cooperation between new and older residents.

In sum, the proposed Alpetco project will not destabilize community life in Valdez either socially or economically; the Alpetco project will enhance the trend of Valdez to become more diverse in terms of its population and economic base.

6.10.10 MITIGATION MEASURES

6.10.10.1 PUBLIC SERVICES

The City of Valdez has accepted the responsibility of mitigating impacts on local public services. In a letter dated September 28, 1978, Mark Lewis, then Acting City Manager of Valdez, assured the President of Alpetco that "Valdez currently has all the necessary utilities, schools and other community facilities necessary to accommodate the demands of a construction boom followed by additional permanent residents without the need for additional facilities or financial support." The size of the Valdez tax base will make it possible to expand locally funded public services, such as additional staff for the Mental Health Center or a greater number of recreation programs, as required. The City might also consider funding resources for family support such as day care centers.

The State Department of Health and Social Services will probably require additional staff in Valdez during the construction phase of the Alpetco project to accommodate an increased caseload during this period.

The President of the Community College believes that the college can provide another form of recreation and entertainment. During the construction phase of the Alpetco facility, the college will also expand its offerings to include daytime courses to meet the needs of newcomers, particularly women who are not working.

The administration of the Community College is anticipating expansion of its vocational programs to meet the staffing requirements of the Alpetco facility during its construction and operations phases. Alpetco officials have committed several million dollars to train Valdez residents for a variety of positions.

6.10.10.2 LAND USE

Recreation

Although the City of Valdez is prepared to meet demand for new recreation facilities, it could undertake some measures to respond to specific identified needs. These needs could include new recreational vehicle campsites, indoor recreation facilities, parks and recreation boat slips (some of which are already planned for in its five-year preliminary budget). Specific programs under which the City might obtain government assistance to acquire land, construct or provide management of facilities include:

1. Coastal Energy Impact Program (CEIP) authorized under the Coastal Zone Management Act of 1976, P.L. 94-370. This program provides grants for the acquisition of recreational facilities to compensate for the loss of recreation resources resulting from the siting, construction, expansion, or operation of any coastal energy facility.

2. Outdoor Recreation Development and Planning authorized by the Land and Water Conservation Fund Act of 1965. Grants are made

for the acquisition and development of such projects as picnic areas, city parks, tennis courts, boat launching ramps, campgrounds, etc. A combination of Federal and State matching funds leaves 25 percent funding by local government.

3. Community Development Block Grants authorized by Title I of the Housing and Community Development Act of 1974, P.L. 93-383. Grants are made which can include the buying or leasing of lands to conserve open space, provide neighborhood recreational facilities such as parks and playgrounds.

4. Alaska Municipal Entitlement Act of 1978. Some of Valdez's entitlement of 4,805 acres of vacant, unappropriated and unreserved State lands could be used for recreation facilities developed in conjunction with projected housing west of Mineral Creek.

5. Legislative appropriations for development of the proposed Keystone Canyon State Park. Campsites could be constructed in the new park to supplement demand from construction workers or others for temporary sites for mobile homes or trailers. Better coordination between the City and State is necessary to bring about a realistic development of the park and its proposed facilities.

Housing

A series of public and private actions can help mitigate the housing shortage that Valdez will face during the operations phase of the Alpetco facility. Actions that the City of Valdez can take include:

1. Making available to builders land that is served by City utilities. The infrastructure costs per housing unit for large tracts of City-improved land should be less than for small parcels of developer-improved land.

2. Shortening the City's review and approval process so as not to unduly delay the production of needed housing.

3. Permitting the placement of modular units on temporary foundations, for a specific time period only. Once demand for housing has abated, the modular units would have to be resited onto permanent foundations. Utilities would have to meet permanent construction standards.

4. Issuing mortgage subsidy bonds, if Congress permits the program to continue.

Actions that the State of Alaska can take include:

1. Issuing mortgage subsidy bonds through the Alaska State Housing Finance Corporation, if Congress permits the program to continue.

2. Producing housing through the Alaska State Housing Authority for low-income families and the elderly in Valdez.

Actions that Alpetco can take include:

1. Intervening directly or indirectly in the production of housing. By directly producing housing, Alpetco could adopt a role similar to that of the Alyeska Pipeline Service Company in 1974. Indirect intervention could take the form of providing a guarantee to developers for the purchase of a certain number of units or hiring a developer/ contractor to build the required units.

2. Providing a guaranteed buy-back of any housing purchased by an Alpetco employee. Under such an agreement, Alpetco would repurchase a housing unit from an employee either for its appraised value or the purchase price, whichever amount were higher. In this way, Alpetco would eliminate the risk of home ownership for current employees while guaranteeing the availability of housing for future employees.

6.10.10.3 MITIGATION MEASURES - TRANSPORTATION

The following mitigation measures are recommended for the project construction period:

- Heavy watering of the primary construction access to the site, the upgraded Glacier Stream Haul Road, should be undertaken to avoid excessive dust problems.

- Alpetco should schedule the maximum possible amount of nonbulky/nonheavy construction materials through the new construction docks. This will minimize the number of trucks passing through the new townsite and impacting the Richardson Highway up to the plant site.

- The Richardson Highway at the proposed Glacier Stream Haul Road crossing should be conditioned and strengthened prior to the commencement of construction activity. As this will be the primary crossing of the Richardson for construction truck traffic, monitoring of the roadway condition should take place throughout the construction period, with repairs and further strengthening being made as required.

- Hauling heavy truckloads of construction materials along the Richardson or Dayville Roads, for the pipelines or marine terminal, should be scheduled so as to avoid the spring thaw. This will be required anyway as the legal maximum allowable loads are reduced considerably at this time.

- Construction traffic on the Richardson Highway east of the Glacier Stream Haul Road should be limited to traffic involved in pipeline and marine terminal construction. All construction traffic (including light trucks and pickups) between the construction docks and the refinery site should be restricted to the Glacier Stream Haul Road.

- On completion of the construction period, the Richardson Highway and Dayville Road in the area of the Alpetco facilities should be restored to its preconstruction condition with any construction truck-induced damage being made good.

- During the entire construction period, some form of crossing control should be operated on the Richardson at the Glacier Stream Haul Road. This could range from flagmen to traffic signals. As the Richardson at this point is a straight road with a high average vehicle speed, considerable advance warning will need to be posted of the truck crossing point. The form of crossing control should be determined, and its operation monitored, by the local State Department of Transportation and Public Facilities. During construction of the pipeline and marine terminal, a similar crossing control should be implemented at the Dayville Road intersection with the Richardson Highway.

- During construction of the pipelines and marine terminal, when construction traffic will be utilizing the Richardson Highway, a temporary lower speed limit should be considered as a means of reducing conflicts between private vehicles and construction trucks.

The following mitigation measures could be implemented with respect to the operations phase of the Alpetco plant:

- The intersection of the Glacier Stream Haul Road (primary plant access) with the Richardson Highway and the Dayville Road should be redesigned to provide for a protected left-turn lane on the Richardson Highway, and also for an acceleration lane onto the highway from the access road.

- The projected heavy peaking of employee trips to and from the plant and the subsequent peak-hour impact on the Richardson Highway towards the new townsite could be mitigated by Alpetco providing work buses. Various elements of the local situation could combine to produce a far higher utilization of such buses than would normally be the case: the proposed shift system of 24-hour working means that most of the workforce will arrive or depart for their shift at the same time; the small size and compact nature of the Valdez community (in the new townsite) would mean the buses could circulate the neighborhoods and provide virtually door-to-door service; the same buses could be utilized to bring the workforce to the start of one shift and to take away the workforce from the previous shift.

6.10.11 UNAVOIDABLE ADVERSE IMPACTS

The long-term economic impacts of the Alpetco project will be positive. Unavoidable adverse economic impacts may occur during the construction period, such as inflationary pressures in the housing market (affecting renters negatively, landlords positively), and shortages of goods and services at the peak of the construction boom. In general, these adverse impacts will be less severe and of shorter duration than similar adverse impacts that occurred during the peak of the Alyeska boom.

Adverse land use effects which cannot be avoided if the project is implemented include the commitment of land for urbanization, land speculation and disruption of existing neighborhoods for the construction of housing. Urbanization includes the direct conversion of open land for the petrochemical complex, the removal of trees and a modification of the scenic quality of the area (particularly at the site of marine terminal), as well as the development of other parts of Valdez for secondary support facilities such as housing and commercial services.

9.1 MEETINGS WITH GOVERNMENTAL AND OTHER ENTITIES

Person & Position	Agency	Subject
	Alaska Aeronautical Industries	
	Alaska Airlines	
Homer Alexander Engineer	City of Valdez	Local Utilities
Paul Arnett	First Southwest Company Anchorage	Valdez Mortgage Subsidy Bonds
Randy Bayliss Regional Environmental Supervisor	State of Alaska Dept. of Environmental Conservation, PWS Regional Office	Land Use Planning Impacts
Carol M. Beaudion Manager	National Bank of Alaska Valdez	Housing in Valdez
Dean Brown	Alaska Department of Natural Resources Division of Lands	Land Status
D. P. Bunn, Jr. Senior Representative	Texaco Development Corp. Houston, Texas	
Robert H. Childers Manager of Electric	Copper Valley Electric Assoc.	Electric Power in Valdez
Gail Cipra Assistant Cashier Branch Loan Coordinator	National Bank of Alaska Anchorage	Mortgage Interest Rates
Carl Cook H.U.D. Administrator	Housing & Urban Development Flood Insurance Administration, Region X	Flood Hazard Areas
John Devens President	Valdez Community College	Educational and Cultural Programs and Facilities
Robert O. Eder Regional Design Engineer	State of Alaska, Dept. of Transportation and Public Facilities, Southcentral Region	Richardson Hwy. Construction Projects Truck Weight Limits Regional Traffic Issues
Bill Ellis Manager	Valdez Airport	
Greg Erickson Director	State of Alaska Research Division Legislative Affairs Agency	

John Friberg General Manager	Copper Valley Telephone Cooperative	Telephone Service in Valdez
Faye Gutherie Regional Social Service Manager	State of Alaska Dept. of Health and Social Services	Social Services in Valdez
Gerald D. Heier Director	State of Alaska Petroleum Property Assessment Department of Revenue	
Steve Howell Vice President of Production	Farm-N-Sea Fish and Shellfish Products, Anchorage	
David Hoxworth Director	Valdez Mental Health Center	Mental Health Programs/Problems
David Hunt Sanitary Engineer	City of Valdez	Wastewater Treatment
Greg Jones	Simpson User Jones	Planning Controls
	Kennedy Air Services	
Susan E. Knighton Research Analyst	State of Alaska Criminal Justice Planning Agency	Crime in Valdez and Alaska
Judy Kreutzer Director	Valdez Heritage Center	Cultural Facilities
Ken Lang	Philleo Engineering and Architectural Service	Housing in Valdez
Herbert Lehfeldt Regional Director	State of Alaska Dept. of Transportation and Public Facilities PWS Regional Office	Transportation Impacts
Mark Lewis City Manager	City of Valdez	Housing in Valdez
Herman E. Londagin Regional Traffic & Utilities Engineer	State of Alaska, Dept. of Transportation and Public Facilities, Southcentral Region	Local Traffic Issues Traffic Data Local Improvements Alpetco Plant Access Issues
Pat Londow Director	Harborview Developmental Center	Public Services
George Maykowskyj Assistant Supertendent	Valdez City Schools	School Enrollment and Facilities

Thomas McAlister Fire Chief	City of Valdez	Fire Protection Services
W. M. McCoy, Manager	Manpower Planning and Personnel Administration Alyeska Pipeline Service Co.	Alyeska Housing in Valdez
Alan Meiners Recreation Planner	State of Alaska, Dept. of Natural Resources Division of Parks	Recreation Impacts
Ellis Mercer General Manager	Alyeska Enterprises, Inc.	Alyeska Housing in Valdez
David Oehler Chief of Police	City of Valdez	Police Services
James F. Palin General Manager	Copper Valley Electric Association	Electric Power in Valdez
Marliss Prasse Planner IV	Alaska Dept. of Community and Regional Affairs	District Coastal Management Program
Homer A. Purdy, Captain of the Port & Officer In Charge of Marine Inspection	United States Coast Guard	Marine Traffic Control
Ricardo Quiroz Environmental Impact Coordinator	State of Alaska Dept. of Transportation and Public Facilities Southcentral Region	Local Traffic Issues Traffic Data Local Improvement Projects Alpetco Plant Access Issues
Robert Reese Director	Gulf Oil Company Purchasing and Stores Bellechase, Louisiana	
Beverly Robinson Social Worker	State of Alaska, Dept. of Health & Social Services	Social Services in Valdez
Marty Rutherford Director	Parks and Recreation City of Valdez	Recreation Impacts
Michael Schmidt Planning Director	City of Valdez	Local Planning Issues
Frank O. Shay	Alyeska Surplus Management	Alyeska Housing in Valdez
Val Stasch Director	Valdez Community Hospital	Health Care

Don Thomas Assessor	Kenai Peninsula Borough Soldotna, Alaska	
Katharine Troll Planner	State of Alaska, Dept. of Natural Resources Division of Parks	Recreation Impacts
John Umlauf	State of Alaska Dept. of Transportation and Public Facilities Transportation Planning Div.	
Tim Uwell	Polar Airlines	Air Travel Between Valdez & Elsewhere Growth Issues
Bonny Walker	Valdez Public Library	Cultural Facilities
Peggy Wilson Planner	Health Systems Agency for Southcentral and Western Alaska	Health Care
Don Wold Executive Director	State Royalty Oil and Gas Board	

Alaska Consultants, Inc./Harbridge House, Inc., 1979. Port of Valdez Market Penetration Study.

Alaska, State of, Department of Commerce and Economic Development, 1978. Valdez; An Alaskan Community Profile. Alaska Department of Commerce and Economic Development, Juneau, Alaska.

Alaska, State of, Department of Environmental Conservation, Division of Water Programs, 1978. Water Quality Management 1978, Volume Two, Sources of Water Pollution and Management Actions in Alaska.

Alaska, State of, Department of Highways, Maintenance Division, 1973. Alaska Oversize and Overweight Permit Movements.

Alaska, State of, Department of Natural Resources, Division of Parks, 1976. Recreation Plan 1976-1980.

Alaska, State of, Department of Transportation and Public Facilities, 1977. Alaska Highways Annual Traffic Volume Report.

Alaska, State of, Department of Transportation and Public Facilities, 1977. Alaska Marine Highways System-Annual Traffic Volume Report, 1977.

Alaska, State of, Department of Transportation and Public Facilities, 1978. Prince William Sound Regional Transportation Study (Unpublished Draft).

Alaska, State of, Office of the Governor. Criminal Justice Planning Agency, 1978. Crime in Alaska-1977.

Alaska, State of, Office of the Governor. Criminal Justice Planning Agency, 1979. Crime in Alaska - 1978.

Alaska, State of, Department of Economic Development, 1968. Valdez, Alaska; Standard Industrial Survey.

April, W., March 14, 1979. "Solomon Gulch Debate Continues," Valdez Vanguard.

Baring-Gould, M. and M.E. Bennett, 1976. Social Impact of the Trans-Alaska Pipeline Construction in Valdez, Alaska, 1974-1975.

Baring-Gould, M., M.E. Benett, P. Hargis, and J. Taylor, August 1978. Valdez City Census. University of Alaska, Anchorage.

Baring-Gould, M., and M.E. Bennett, 1975. Social Impact on

the Trans-Alaska Pipeline Construction in Valdez, Alaska.

Bomhoff, Collie and Klotz, 1971. A Comprehensive Development Plan. Vol. 1. Basic Planning Studies. City of Valdez.

Bomhoff, Collie and Klotz, 1971. Valdez. A Comprehensive Development Plan. Vol. 2 Comprehensive Development Plan.

Briscoe, Maphis, Murray and Lamont, 1978. Action Handbook. Managing Growth in the Small Community. Part III Community Action and Growth. United States Environmental Protection Agency.

Brown and Root, 1979. Description of a Proposed Medical/First Aid Station - Facility Health Center.

Brown and Root, 1979. Plant Fire Protection and Security Manual.

Burchell, R. W. and D. Listokin, 1978. The Fiscal Impact Handbook; Estimating Local Costs and Revenues of Land Development. The Center for Urban Policy Research, New Brunswick, New Jersey.

Copper Valley Electric Association, 1979. Fact Sheet on the Copper Valley Electric Association. Solomon Gulch Project.

Copper Valley Electric Association, Inc., 1979. The Construction Options by the Solomon Gulch Hydroelectric Power Project Proposed by Copper Valley Electric Association.

Copper Valley Electric Association, Inc., 1979. Fact Sheet on the Copper Valley Electric Association. Solomon Gulch Project.

Copper Valley Electric Association, Inc., 1979. Power Requirements Study.

Ender, R. L. and B. Withers, 1978. 1978 Population Profile Municipality of Anchorage. Municipality of Anchorage.

Garnett, R.W., III, 1973. Equalization of Local Government Revenues in Alaska. University of Alaska, Institute of Social, Economic and Government Research.

Greenbert, M. et al, 1978. Local Population and Employment Projection Techniques. The Center for Urban Policy Research, New Brunswick, New Jersey.

Gross, A. M., Attorney General, J. K. Donohue, Assistant Attorney General, March 15, 1978. Memorandum to Lee McAnerney, Commissioner of Community and Regional Affairs, via Palmer McCarter, Director of Local Government Assistance.

Health Systems Agency for South Central and Western Alaska, 1979. Health Systems Plan.

Highway Research Board, 1965. "Highway Capacity Manual," WHighway Research Board Special Report 87. National Academy of Sciences, National Research Council.

Johannsen, N., April, 1979. "Marine Parks for Alaska, the International Connection," Alaska Magazine.

Knox, R. G., March, 1979. "Valdez Takes Its Future Into Its Own Hands," Alaska Industry.

Leask, L., September, 1976. "Valdez Today is Okay." Alaska.

Lin, P. C., 1971. Alaska's Population and School Enrollments. University of Alaska, Institute of Social, Economic and Government Research.

Phillco Engineering and Architecture Service, Inc. and URS/Hill, Ingman, Chase and Company, 1975. City of Valdez, Alaska Wastewater Facilities Final Facilities Plan. Vol. 1, Summary Report.

Pistoll, L., 1978. An Oil Pipeline Employment Multiplier and Post Construction Residuals in Employment. Alaska Department of Labor, Research and Analysis Section.

Platt, R., 1976. "The National Flood Insurance Program; Some Mid-stream Perspectives," American Institute of Planners Journal.

Santa Fe Technical Services Company, 1979. Preliminary Engineering Study, Port of Valdez Expansion.

Schmalle, Stevenson and Associates, 1978. Port of Valdez, Feasibility Study #2.

Special Interagency Task Force For the Federal Task Force On Alaskan Oil Development, 1972. Final EIS, Proposed Trans-Alaskan Pipeline. U.S. Department of Interior.

Sternlieb, G. and J. W. Hughes, 1978. Current Population Trends in the United States. The Center for Urban Policy Research, New Brunswick, New Jersey.

Tanaka, J. M., 1968. Relocation of Valdez. United States

Department of the Army, Corps of Engineers, Alaska District.

U.S.D.A. Forest Service, 1978. Alaska Supplement to Draft Environmental Statement, Roadless Area Review and Evaluation.

U.S.D.A.Chugach National Forest, 1978. Draft Environmental Impact Land Ownership Adjustment Proposal from the Chugach Natives Inc. and Koniag Inc.

United States Department of the Interior, U.S. Bureau of Land Management. Final EIS Crude Oil Transportation System: Valdez, Alaska to Midland, Texas (As proposed by SOHIO Transportation Company).

United States Bureau of the Census, January 1979. 1976 Population Estimates in 1975 and Revised in 1974 Per Capita Income Estimates for Census Divisions, Borough, and Incorporated Places in Alaska. United States Printing Office.

United States Department of Energy. Federal Energy Regulatory Commission, 1978. Solomon Gulch Project. Final Environmental Impact Statement.

United States Department of Housing and Urban Development, Federal Insurance Administration, 1979. Questions and Answers, National Flood Insurance Program.

United States Department of Housing and Urban Development. Federal Insurance Administration, 1976. Flood Insurance Study, City of Valdez, Alaska.

Valdez Vanguard, March 14, 1979. "Hydro Project Raises Questions."

Valdez Vanguard, November 9, 1977. "Valdezians Approve of Industrial Development Here by 6 to 1."

Valdez Vanguard. April 11, 1979. "Full-time EMS Director Needed."

Valdez, City of, 1979. Phase 1 Inventory Report, City of Valdez, Alaska Coastal Management Program (First Draft).

Valdez, City of, Alaska, 1978. Initial Overall Economic Development Plan.

Valdez, City of, Overall Economic Development Committee, 1978. Valdez Overall Economic Development Program.

Zahniser, Jim, April 11, 1979. "Valdez Passes $48 Million in Port Bonds," Anchorage Times.

ENGLISH - METRIC CONVERSION TABLE

All measurements included in this Technical Appendix are given in the English system of measurement. Metric conversion from common English units of measure are given below.

English Unit	Conversion Factor			Metric Unit
Feet	x	0.305	=	Meters
Miles	x	1.609	=	Kilometers
Acres	x	0.405	=	Hectares
Square Mile	x	259.2	=	Hectares
Pounds	x	0.454	=	Kilograms
Tons	x	908.0	=	Kilograms
Gallons	x	0.004	=	Cubic Meters

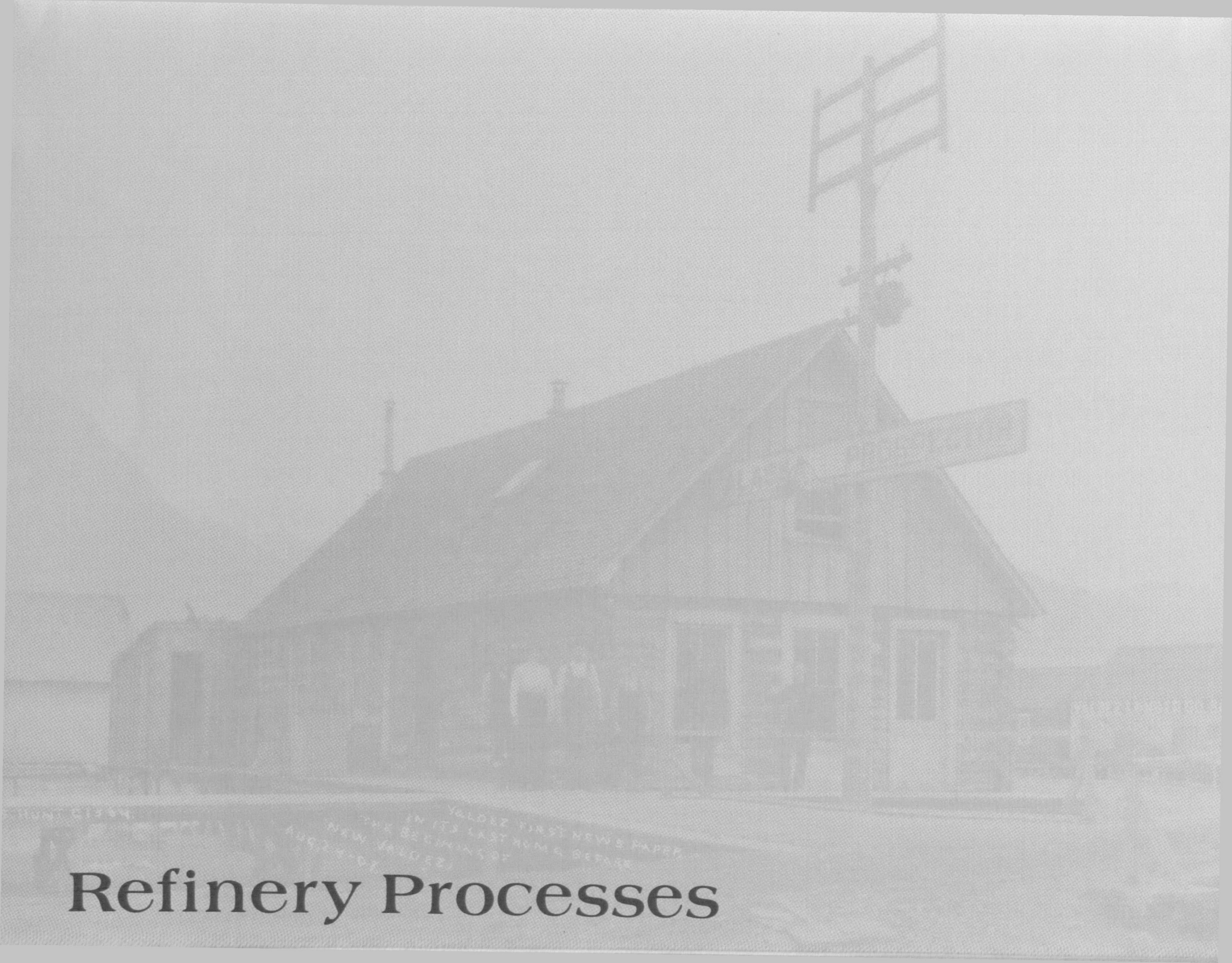

Refinery Processes

REFINERY PROCESSES
AND
ALTERNATIVES

THE PACE COMPANY CONSULTANTS & ENGINEERS, INC. 5251 WESTHEIMER
P.O. BOX 53473 HOUSTON, TEXAS 77052 AC 713 965-0311 CABLE: PACECO-HOUSTON TELEX 77-4350

MARINE

MARINE

SCOPE OF MARINE ACTIVITIES

The following petroleum products will be transported in tank vessels and barges from the Port of Valdez to the ports of Seattle, San Francisco, Los Angeles, and Honolulu:

	Barrels per Calendar Day	Thousands Long Tons Per Annum
Motor Gasoline	75,090	3,208.6
Aviation Jet Fuel	29,139	1,286.7
Diesel Fuel	5,000	242.7
Residual Fuel(No.4 grade)	2,959	153.5
Heavy Gas Oil(clarifier oil)	4,861	252.1
Naphtha(for ethylene production)	13,700	616.7
Benzene	2,546	127.7
Toluene	5,640	281.2
Xylenes	6,177	306.3
Total	145,112	6,553.6*
Sulfur	214 T/D	78.1

*Includes sulfur

The following is an estimate of the vessel sizes which will be used and the maximum number of round trips expected to be made. Each round trip voyage consists of one laden and one in ballast passage.

Size and Number of Vessels	Round Trips Each Year
Tank Vessels	
Three (55,000 D.W.T.)	54
Three (36,000 D.W.T.)	72
One (25,000 D.W.T.)	30
Barges	
Two (10,000 D.W.T.)	30
Total All Vessels	186
(Average vessel size - 36,632 D.W.T.)	

In addition to the foregoing tank vessels, it is expected that the sulfur will be shipped in small parcels (1,000 to 10,000 ton lots) in ordinary cargo vessels. The total annual quantity of sulfur to be shipped (78,100 tons) is equivalent to about ten extra cargo vessels each year. It is not expected that all the sulfur will be shipped to United States West Coast ports.

TRANSPORTATION OF REFINERY EQUIPMENT AND CONSTRUCTION MATERIALS

During the construction phase of the refinery, large pressure vessels, equipment, and construction materials will be transported to Valdez by cargo vessels and barges. The approximate total weight of these materials delivered over a two year period is 750,000 tons.

The number of vessels will not be greater than the number of product tank vessels (i.e., 186) and no difficulties are foreseen which could not be handled by the present VTS system. Certain heavy vessels (12 feet diameter, 100 feet long and 700 tons) will arive by barge towed by an ocean tug. No difficulties are expected in putting these tows through the VTS system except that it is probable that the tug would be required to propel the barge from an along-side position and that other tugs might be required for maneuvering.

SUPPLY AND TRANSPORTATION OF CHEMICALS TO THE ALPETCO REFINERY

Prior to the startup of the refinery in late 1982 and during the preceding nine months, approximately 2,000 tons of catalysts and chemicals will be transported to the refinery in cargo vessels.

These materials will comprise the following:

- Catalytic Cracking Catalysts
- Hydrocracking Catalysts
- Desulfurization Catalysts
- Reforming Catalysts
- Activated Clays
- Ethanolamines
- Caustic Soda
- Hydrofluoric Acid

Following the commissioning of the refinery, replacement catalyst and chemicals will be at a rate of 1,000 tons annually.

None of these materials present any transportation problems and it was specifically established that hydrofluoric acid could be transported in a cargo vessel and it would most probably be contained in pressure vessels of 10 ton capacity. The initial charge of hydrofluoric acid to the alkylation plant is approximately 250 tons.

NEW COAST GUARD REGULATIONS

All tank vessels will be of American Flag registry and as the refinery operations will not commence until late 1982, the tank vessels will be equipped to meet the new Coast Guard DOT regulations (33 CFR Part 157 - CGD 77-058 B). These regulations, which are expected to be issued in final form by late 1979, are designed to reduce significantly the potential for pollution of United States coastal waters and in particular to spill incidents resulting from groundings, tanker collisions, fire, and explosions.

A summary of the effects of the new regulations on the transportation of products from the Alpetco refinery is given below. In these regulations the definition of tank vessels includes integrated tug barges.

a. All tank vessels having a Gross Registered Tonnage (grt) of more than 10,000 grt must have two remote steering gear control systems, each operable separately from the control bridge.

   This regulation requires that existing vessels be retrofitted with an additional control system prior to June 1, 1981.

b. The main steering gear of new tank vessels of 10,000 grt and above must have two or more identical steering gear power units and must be capable of operating with one or more of these power units. A new vessel is defined as one for which a building contract is placed after June 1, 1979; or in the absence of a building contract, a vessel for which the keel is laid after January 1, 1980; or any vessel delivered after June 1, 1982.

   A vessel of 10,000 grt is approximately equivalent to a tank vessel of 16,000 D.W.T.

It is the stated opinion of the United States Coast Guard that the ultimate benefit of the regulations summarized in a and b above would be a reduction in the probability of collision and groundings of tankers caused by steering gear failure and a resulting reduction in risk of property damage, personal injury and death, and pollution of the oceans and United States waters.

c. The regulations state further that all new tank vessels of 30,000 D.W.T. or more for product shipment would be required to have protectively located segregated ballast tanks (SBT).

d. All other (existing) tank vessels of 40,000 D.W.T. or more for product shipment would be required to have SBT or CBT (clean ballast tanks) not later than June 1, 1981. CBT are cargo tanks dedicated solely to the carriage of clean ballast water. CBT will reduce cargo carrying capacity by about 20 percent.

The SBT and CBT regulations (c and d) above are expected to reduce significantly oil pollution during tanker loading, discharging, and transit operations.

e. The new regulations require that all new tank vessels of 20,000 D.W.T. and over for the carriage of petroleum products must be fitted with an inert gas system (IGS).

f. All existing product carriers of 70,000 D.W.T. or over must be fitted with an IGS by June 1, 1981.

g. All existing product carriers of between 40,000 and 70,000 D.W.T. must be fitted with an IGS by June 1, 1983.

These regulations concerning the installation of IGS will reduce the probability of tank vessel explosions and fire with consequent sinkings, groundings, and pollution.

COAST GUARD REQUIREMENTS FOR SPECIAL CARGOES

The cargoes falling into this category are liquified petroleum gas (propane) and molten sulfur. In both these cases the design of the vessels and materials of construction may not be the same as for vessels operating in warmer waters than Price William Sound. In particular it may be necessary to build the hulls of these vessels of particular steels selected for the low temperature service conditions. Special attention will be given to these considerations for these types of vessels. Cargoes of liquified natural gas and ammonia are both currently shipped through the Kenai Straits. At the present time, Alpetco does not expect to ship or sell any LPG.

These special vessels would not be subject to special traffic or operational constraints above those required for petroleum product tank vessels although the vessels would have to have C.G. certificates of compliance.

PORT VALDEZ TANK VESSEL CONTROL

An important factor which greatly reduces the possibility of tank vessel traffic accidents in Port Valdez and the approach through Prince William Sound is that these areas have been declared by the United States Coast Guard to be a "Vessel Traffic Service Area" (VTS). The transit of tank and other vessels through these areas is governed by the Coast Guard regulations set out in the operating manual CGD 17-010 of July, 1977.

The essentials of Price William Sound Vessel Traffic Service (VTS) are four basic components:

- A Traffic Separation Scheme (TSS)
- A Vessel Movement Reporting System
- Radar Surveillance
- Operational Regulations

Two additional factors are:

- The Use of Pilots Throughout the VTS
- The Use of Tug Boats

The Traffic Separation Scheme consists of two parallel traffic lanes each having a width of between 1,000 yards and 1,500 yards. The traffic lanes are separated by a distance of 1,000 to 2,000 yards except at the Valdez Narrows, which is a one-way traffic area. Vessels operating in this area are required to have Bridge to Bridge Radiotelephone, and permission to enter the Narrows is under Coast Guard control. The channel width at the Narrows is 1,200 yards for a distance of approximately two miles.

Vessels transitting the system must continuously report to the Coast Guard in English by VHF-FM communications network. The reports are to include certain information on vessel operation and other sea, air, and traffic conditions.

A continuous radar watch is maintained at two points and covers the Valdez arm of Prince William Sound, the Valdez Narrows, and Port of Valdez.

A security zone has been established around the TAPS Terminal in Port Valdez. This security zone comprises an area within 200 yards of the waterfront of the complex and extends within 200 yards of any tank vessel maneuvering to approach, moor, unmoor, or depart the TAPS complex. No vessel may enter this security zone without the permission of the Captain of the Port.

So far the traffic density in the Prince William Sound VTS area has been light, averaging 2.4 vessels per day with a maximum of eight vessels. However, this will increase when the TAPS throughput increases from 1.4 to 2.0 million barrels per day.

Tank vessels at the proposed product dock will be required to operate under the following facility regulations:

- 33 CFR Part I - 126 Waterfront Facility
- 33 CFR Part I - 154 Oil Pollution Prevention Regulations for Facilities.

In addition to the foregoing, vessel loading operations should also conform to the "International Oil Tanker and Terminal Guide" (IOTTSG). However, if in any respect the IOTTSG differs from the Coast Guard regulations, the authority of the Coast Guard is overriding. Discussions with Coast Guard at a later stage may result in a security zone around the Alpetco product docks.

All tank vessels of 20,000 D.W.T. or more must use tug assistance for docking and undocking. The VTS may direct any tank vessel of 20,000 D.W.T. or more to use tug assistance in the Valdez Narrows one-way traffic area.

ROUTING OF SHIPS FROM PRINCE WILLIAM SOUND TO UNITED STATES WEST COAST PORTS

Two nationally recommended tracks have been established between the termination of the traffic separation scheme in the approaches to Prince

William Sound to (1) the Strait of Juan de Fuca and to (2) the Santa Barbara Channel. These two routing systems each have northbound and southbound tracks separated by a minimum distance of 20 miles. The routing is primarily for use of oil tankers engaged in the Alaskan trade to all ports on the United States West Coast. The use of the recommended tracks is voluntary but should be of great assistance in minimizing the risk of collisions.

FREQUENCY OF OIL SPILLS AT MARINE TERMINALS DURING LOADING AND UNLOADING TANKER OPERATIONS

The most detailed information on this subject is that presented by Captain G. Dudley, Harbormaster for the Milford Haven Ports area (in Wales, U.K.) at a symposium on the "Ecological Effects of Oil Pollution on Littoral Communities" held in London, England in December, 1970.

The port of Milford Haven is comparable to those on the West Coast of the United States and is situated at the entrance to the Bristol Channel. Prior to 1960 there was no petroleum industry in this area. For this reason all the subsequent pollution incidents were the result of modern petroleum loading and unloading operations. These are reasonably comparable to the operational standards expected in 1984 when the new United States Coast Guard regulations are in force. Since the port of Milford Haven had not handled petroleum products until 1960, it was possible as the result of experience in other ports to set regulations and coordinate activities for recording and dealing with <u>all</u> minor and major oil spills.

The depth of water in the petroleum port areas varies from 35 feet to 71 feet at mean high water. The range of the tide varies from 16 feet to 26 feet. The tidal currents in this area are very strong (up to 6 knots). The tidal range and currents are greater than those experienced in United States West Coast ports and their physical effects will marginally tend to increase the risk of spills during loading and unloading operations at Milford Haven compared with United States West Coast ports.

An analysis of the Milford Haven data is given in Tables 1 and 2, in which the British units of long tons and imperial gallons have been converted to the United States units of barrels of cargo carried and pollution quantities to United States gallons. Over the nine year period, 55 percent of all spills were less than 96 gallons and 29 percent were between 96 and 192 gallons. The remaining 16 percent are only given in the original tables as over 192 gallons. Except for three special cases these were in the range of 192 to 3,150 gallons. The three special cases were not directly attributable to loading and unloading operations as shown below and could be omitted from the analysis.

TABLE I

ANNUAL NUMBER OF TANK VESSELS AND POLLUTIONS

Year	Tankers		Number of Pollutions			Total	Number Per 100 Vessels
	Number of Vessels	Volume of Cargo Millions of Barrels	Under 96 U.S. Gallons	96 to 192 U.S. Gallons	Over 192 U.S. Gallons		
1961	1,066	74.25	25	9	11	45	4.2
1962	1,192	86.25	18	4	11	33	2.8
1963	1,236	97.50	18	6	6	30	2.4
1964	1,392	132.75	27	14	2	43	3.1
1965	1,985	186.75	46	28	18	92	4.6
1966	2.378	216.75	42	22	14	78	3.3
1967	2,680	211.50	32	16	7	55	2.1
1968	2,669	225.00	26	25	2	53	2.0
1969	3,266	299.25	34	19	5	58	1.8
Total	17,864	1,530.0	268	143	76	487	2.7
Percent	--	--	55	29	16	100	-

TABLE II

ANALYSIS OF CAUSES OF POLLUTIONS

	YEAR										Annual
	1961	1962	1963	1964	1965	1966	1967	1968	1969	Total	Average
From Vessels											
Overflow Cargo	3	5	5	8	14	12	11	9	14	81	9.0
Overflow Bunkers	7	4	1	4	14	6	4	9	8	57	6.3
Sea Valves	11	4	2	4	5	10	8	9	12	65	7.2
Bilges/Ballast	12	10	6	9	18	14	9	4	6	88	9.8
Hull Defects	5	7	3	5	1	11	12	8	10	62	6.9
Miscellaneous	2	3	5	--	12	6	4	1	2	35	3.9
Total (Vessels)	40	33	22	30	64	59	48	40	52	388	43.1
From Jetties											
Pipelines/Hoses	1	--	3	4	10	10	3	9	6	46	5.1
Sumps/Slop Tanks	3	2	1	1	11	2	2	3	--	25	2.8
Outfalls	--	--	4	5	5	3	--	1	--	18	2.0
Miscellaneous	1	--	--	3	2	4	2	--	--	12	1.3
Total (Jetties)	5	2	8	13	28	19	7	13	6	101	11.2
TOTAL (VESSELS + JETTIES)	45	35	30	43	92	78	55	53	58	489	54.3

- Year 1962 includes one grounding in which about 31,500 gallons of crude was spilled.

- Year 1967 includes arrival of one vessel with damaged shell plating below the water line which resulted in 78,750 gallons spilled.

- Year 1968 a crude tank in a refinery overflowed and about 31,500 gallons escaped into the harbor waters.

At Milford Haven tank vessels of many nationalities were received and it was observed that this tended to reduce the effectiveness of many vessels as far as pollution was concerned. In the Alpetco case all the vessels will be of American flag and will be meeting the more stringent requirements of the United States Coast Guard. For this reason it is considered that, in practice, for the United States ports it should be possible to reduce the frequency of pollution incidents. It was also observed at Milford Haven that product carriers were less prone to pollution incidents than crude carriers because, in general, they were called upon to load and unload petroleum products more frequently than crude oil carriers and hence obtained greater experience in these operations.

The analysis of the number of vessels calling at the port of Milford Haven to load or discharge cargo (Table I) shows that the nine year average was 2.7 pollution incidents per 100 vessels. On this basis the following are the average annual number of pollution incidents to be expected at United States ports. Of these 94.8 percent in the Alpetco case would be with clean products which are not persistent pollutants and may be cleaned rapidly without longer term problems. Only 5.2 percent would be with "dirty" products (residual fuel oils).

Harbor	Duty	Number of Vessels	Annual Pollution Incidents
Valdez	Loading Products	186	5.0
Seattle	Unloading Products	45	1.2
San Francisco	Unloading Products	45	1.2
Los Angeles	Unloading Products	51	1.4
Honolulu	Unloading Products	45	1.2
		Total	10

Of these 84 percent or 8.4 incidents per annum would be of a minor nature (less than 192 gallons).

If Alaskan crude oil had been transported to and refined in the above port areas, the number of pollution incidents would have been reduced to approximately the numbers given below. However, all of these would have been with a dirty

product (crude oil) which is more difficult to clean up and tends to be persistent as far as beaches, grasses and rocks are concerned.

Harbor	Duty	Number of Vessels	Annual Pollution Incidents
Valdez	Loading Crude	56	1.5
Seattle	Unloading Crude	14	0.4
San Francisco	Unloading Crude	14	0.4
Los Angeles	Unloading Crude	14	0.4
Honolulu	Unloading Crude	14	0.4
		Total	3.1

Of these 84 percent or 2.6 incidents per annum would be of a minor nature (less than 192 gallons).

Based on the Milford Haven experience over a nine year period, the largest spill to be expected during a loading operation is 3,150 gallons. A spill of this size would be unlikely to occur more than once in three years on the planned scale of operations.

THE PACE COMPANY CONSULTANTS & ENGINEERS, INC. 5251 WESTHEIMER
P.O. BOX 53473 HOUSTON, TEXAS 77052 AC 713 965-0311 CABLE: PACECO-HOUSTON TELEX 77-4350

FEEDSTOCK AND PROCESS RAW MATERIALS SOURCES

FEEDSTOCK AND PROCESS RAW MATERIAL SOURCES

CRUDE OIL SUPPLY

The principal feedstock concern for any new refinery is procuring a steady supply of crude oil. Alaska Petrochemical Company and the State of Alaska executed the Royalty Oil Contract in February 1978 and the contract was approved by the Alaska legislature in June 1978.

The contract has a 27 year life and assures ALPETCO of being able to purchase up to 150,000 BPD of crude oil from the State of Alaska's leases at Prudhoe Bay or other state leases should the Prudhoe Bay production fall short. ALPETCO will compensate the state at a rate equivalent to what the producing oil companies would have paid if Alaska had received its royalty in value rather than crude oil.

ALPETCO cannot purchase more than 150,000 BPD under this contract, although the Alaskan Pipeline now carries more than one million barrels per day from Prudhoe Bay to Valdez, the proposed site of the new refinery.

OTHER RAW MATERIALS

The refinery design must provide for internal production of all intermediate feedstocks such as catalytic reforming feed naphtha and hydrogen. The lack of other hydrocarbon processing plants in the area precludes the purchase of such intermediates. However, many petrochemical complexes are designed to be wholly independent of any process raw materials other than crude oil, and construction of Alpetco's proposed facility to operate in such a manner should pose no problem.

Several pipeline projects have been initiated to transfer natural gas supplies from northern Alaska. The Alaska Highway project would consist of 7,668 kilometers (4,765 miles) of new pipe, with completion anticipated by early 1984. The project will move natural gas from wells as far north as Prudhoe Bay across Alaska and Canada into the northern United States. The design capacity of the system is 68 thousand cubic meters per day (2.4 billion cubic feet per day). This project has the strong backing of both the United States and Canadian governments.

Use of such pipelines to move LPG into or through the Valdez area would provide a feedstock source for an ethylene manufacturing unit. However, the proposed refinery does not presently include an ethylene unit and no firm information is available on the likelihood of moving LPG. Ethylene can also be

manufactured from other crude oil–derived materials, such as naphthas or gas oils. Ethylene consists of two carbon atoms and four hydrogen atoms and is a principle feedstock for many petrochemical processes.

Such commodities as catalyst, gasoline additives, nitrogen, and other small volume supplies can easily be supplied at the proposed refinery site and thus should pose no problems to the operation of the ALPETCO facility. Many Canadian and West Coast refiners now use these materials, but increased transportation costs are to be expected to move them to Valdez.

THE PACE COMPANY CONSULTANTS & ENGINEERS, INC. 5251 WESTHEIMER
P.O. BOX 53473 HOUSTON, TEXAS 77052 AC 713 965-0311 CABLE: PACECO-HOUSTON TELEX 77-4350

FEEDSTOCK AND PROCESS RAW MATERIALS AVAILABILITY

FEEDSTOCK AND PROCESS RAW MATERIALS AVAILABILITY

GENERAL

Total crude oil production in Alaska was 463,000 BPD in 1977. Daily production is forecast to exceed 2 million barrels per day by 1990. A summary of historical and forecast production levels for the state of Alaska follows. Alpetco's principle feedstock is the Alaskan North Slope crude.

ALASKAN CRUDE SUPPLY*
(Thousand Barrels Per Calendar Day)

	Alaska Onshore	Alaska Offshore	Alaska North Slope	Total
Actual				
1975	26	165	-	191
1976	24	149	-	173
1977	21	128	314	463
Forecast				
1980	15	105	1,400	1,520
1985	12	88	1,600	1,700
1990	5	50	1,600	1,655
2000	4	536	1,600	2,140

* Source: The Pace Company

One area of Alaska—the Gulf of Alaska—has not developed as rapidly as once was anticipated. Sixteen dry holes had been drilled in the area by year end 1978, although all the structures drilled appeared promising from seismic and geophysical work. (This includes eleven dry holes and five exploratory wells which have been drilled in the Gulf of Alaska, Lower Cook Inlet, and Kodiac Island areas.) Companies active in the area have not yet abandoned these sites, but probably will spend the next two years acquiring and analyzing data.

In October 1977, 87 tracts were in the Lower Cook Inlet. Drilling activity there has been sparse with only one well completed, and it had only noncommercial shows. Three more wells are now being drilled.

Alaska's proven reserves of crude oil and gas are listed in the following table.

RESERVES OF CRUDE OIL, NATURAL GAS LIQUIDS, AND NATURAL GAS IN ALASKA

Crude Oil (Thousand Barrels)	9,616,111
Natural Gas (Million Cubic Feet)	
Associated-Dissolved	26,340,881
Non-Associated	5,491,735
TOTAL	31,832,616
Natural Gas Liquids (Thousand Barrels)	
Associated-Dissolved	408,605
Non-Associated	0
TOTAL	408,605

Source: American Petroleum Institute, American Gas Association and Canadian Petroleum Association. All data as of year-end 1977.

FUTURE LEASE SALES

The eagerly awaited sale of state and federal tracts in the Beaufort Sea off Alaska's north coast is scheduled for December, 1979. However, the lease sales may be delayed because the State of Alaska has indicated that it will not proceed with the sale unless the federal government allows export of North Slope crude. When finally allowed to drill in the Beaufort Sea, industry will face a technological challenge. Some drilling can be accomplished through the use of slant holes from the barrier islands, but most of the area will require drilling from artificial gravel, ice islands, or from mobile rigs which have not yet been tested in Alaska's northern waters.

In addition to the Beaufort Sea, the Federal Bureau of Land Management has four offshore sales scheduled in the next three years. These will be in the eastern Gulf of Alaska, the Kodiak Shelf, Lower Cook Inlet, and the Norton Sound-Bering Sea area off western Alaska. Other potential lease areas off southern and western Alaska are as yet unscheduled.

In early 1979 the state Natural Resources Department proposed to the legislature a new five year program for leasing state lands in several basins, but did not describe specific sites. The program is designed to be flexible to meet variable conditions but does mention 15 sales through 1983.

The Alaska Native Claims Settlement Act, (Section d–2) has passed the United States House of Representatives and is awaiting Senate approval. The exact form of the bill which the Senate will finally ratify is not known; however, it is likely that oil production will be prohibited on approximately 1 million acres of Alaskan land. While this will certainly have an affect on the long-range future of Alaskan oil development, it should not reduce the supply of oil available to ALPETCO's proposed refinery.

Three major expansion projects designed to maintain the flow of Alaskan oil have been announced this year. Atlantic Richfield plans a major expansion of the oil and gas gathering facilities on the eastern edge of the Prudhoe Bay Field. The estimated cost of this work is $1 billion and it will take over five years to implement.

Standard Oil of Ohio has committed $100 million to expand their facilities on the west side of Prudhoe Bay. This expansion, scheduled for completion in mid–1981, includes equipment to separate crude oil, gas, and water and to deliver the crude to the Trans-Alaska Pipeline.

Atlantic Richfield has also announced plans to develop the Kuparuk field which is west of the Prudhoe Bay field. This $350 million project should achieve a production rate of 60 thousand barrels per day by 1982. Additional investment could bring the volume to 100,000 BPD by 1984.

In addition, capacity of the Trans-Alaska Pipeline is scheduled to be expanded from 1.2 million to 1.35 million barrels per day by late 1979.

Standard Oil of Ohio's withdrawal from the PAC-TEX pipeline project should not have a significant impact on ALPETCO's crude oil supply. This line, scheduled for operation by 1980, was to have carried crude oil 1,026 miles from Long Beach, California to Midland, Texas. It would have moved up to 500,000 BPD. Operation of the line would allow more economic transportation of Alaskan crude to Gulf Coast refining centers and thus stimulate demand for the crude. Sohio announced its withdrawal in May, 1979 due to the project becoming economically unattractive as a result of long delays in obtaining environmental permits.

Obviously any additional discoveries by these exploratory activities enhance Alpecto's operation from the standpoint of improved availability of crude and the possibility of crude oil trades to obtain raw materials with various qualities to satisfy differing product demands.

CRUDE OIL PROPERTIES

The crude oil produced from Alaska's North Slope area has shown little quality variation. The primary duty of the Trans-Alaska Pipeline is to transport crude oil from the Prudhoe Bay area on the North Slope to an oil tanker loading terminal at Valdez. In addition, a stream of crude oil is delivered to the North Pole Refinery near Fairbanks, Alaska.

Oil is removed at three pump stations along the pipeline and processed to provide diesel fuel to operate pumps. At each station a return stream is reintroduced into the line for ultimate delivery at Valdez.

Oils from various producers at Prudhoe Bay are commingled and shipped to Valdez. Therefore, the crude oil received at Valdez varies in quality from the oil delivered to the pipeline origin. The changes are due not only to the variable qualities of the oil deliveries at Prudhoe Bay, but are also affected by the offtake and return streams at the intermediate points. Quality variation between offtake and return streams at the North Pole Refinery is much greater than variations encountered at the beginning and end of the pipeline.

Despite the potential for wide swings in the quality of the oil delivered, experience has confirmed only minor variations. The API gravity of the crude delivered has varied only about one degree. The sulfur content of the North Slope crude has only changed over a range of approximately 0.10 weight percent. The major properties for a typical North Slope crude oil are shown in Table 1. The gravity for the oil shown is 26.7°API and the sulfur content is 1.02 weight percent.

TABLE 1
TYPICAL CRUDE OIL PROPERTIES

	Whole Crude		220/400 Naphtha		400/650 Distillate		650/1000 Vacuum Gas Oil		1000+ Vacuum Residuum		650+ Atmospheric Residuum	
	°API	WT % S	Volume %	WT % S	Volume %	WT % S	Volume %	WT % S	Volume %	WT % S	Volume %	WT % S
Alaskan North Slope	26.7	1.02	12.73	0.02	25.86	0.30	28.63	1.15	24.38	2.14	53.01	1.60

THE PACE COMPANY CONSULTANTS & ENGINEERS, INC. 5251 WESTHEIMER
P.O. BOX 53473 HOUSTON, TEXAS 77052 AC 713 965-0311 CABLE: PACECO-HOUSTON TELEX 77-4350

DESCRIPTION OF MAJOR PROCESSES

DESCRIPTION OF MAJOR PROCESSES

CRUDE DISTILLATION UNIT

Introduction

The work horse of the refinery is the crude distillation unit which fractionates the raw crude into a number of narrow fractions. The crude distillation unit will provide fuel gas, naphtha, kerosene, diesel, atmospheric and vacuum gas oils and heavy residual.

Process Description

The crude distillation unit involves the following operations:

- Crude desalting
- Atmospheric distillation
- Product stripping
- Vacuum distillation

Salt and extraneous impurities must be removed to minimize corrosion and to protect downstream catalytic process operations. Water from a surge drum is injected into the raw crude oil line. The mixture is heated by exchange and passed to the desalting drum. Here, the aqueous phase containing salt and other dissolved compounds, along with some sediment, is drawn off for disposal to the process waste water system.

The desalted crude oil is further heated by exchange and a fired crude heater. This heater supplies all of the remaining heat necessary to fractionate the crude in the atmospheric column (often referred to as the main column). The main column produces a light material through gasoline overhead fraction as well as heavy naphtha, kerosene, diesel, and atmospheric gas oil side cut products.

The total main column overhead is heat exchanged and cooled in a condenser before passing to the main column overhead receiver. Corrosion inhibitors and ammonia are injected into the overhead line upstream of the condenser. Gas from the receiver is compressed and discharged to the saturates gas concentration unit. A portion of the liquid hydrocarbon overhead is returned to the top of the main column as reflux. The water phase in the overhead receiver, essentially condensed stripping steam, is sent to the sour water stripper.

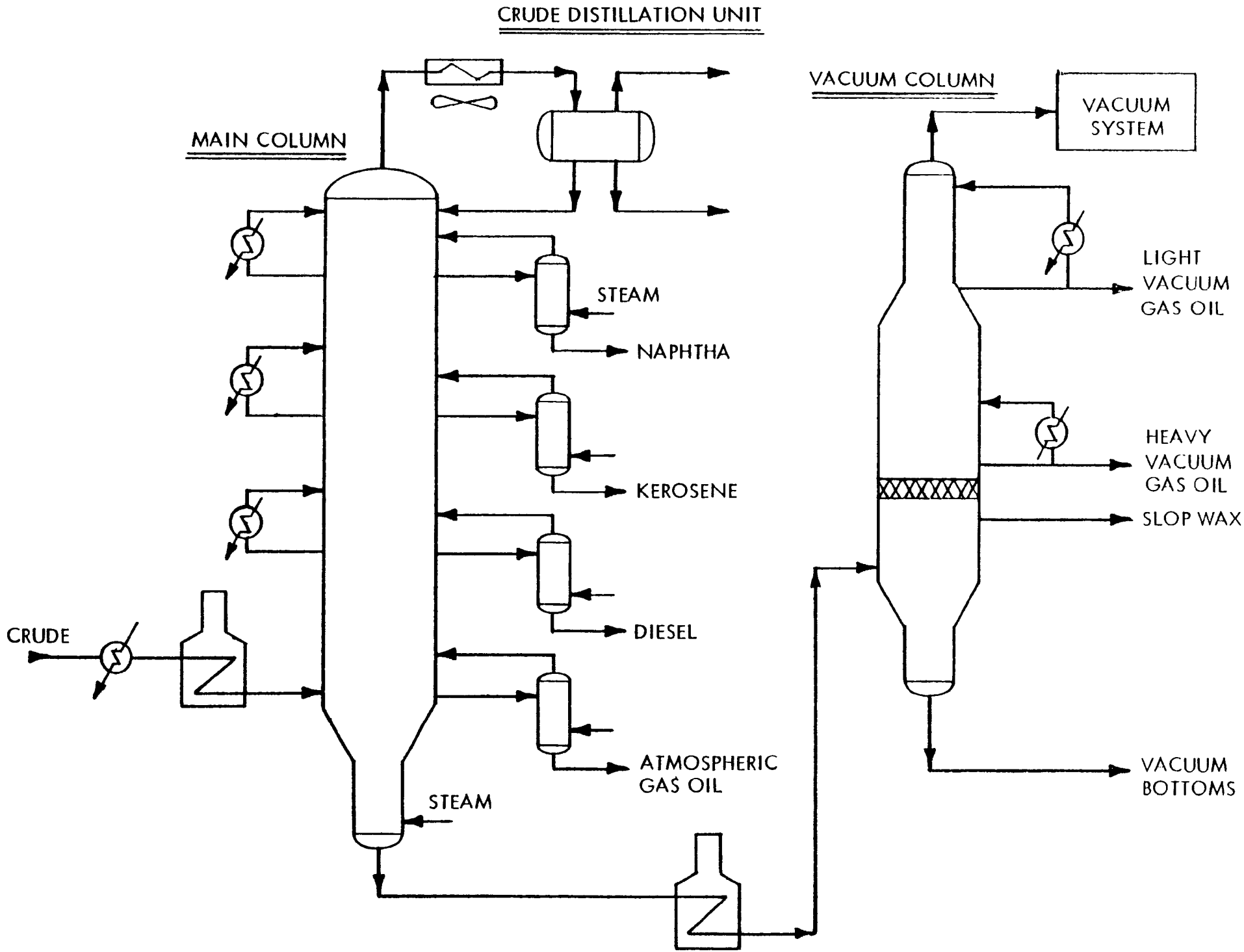
CRUDE DISTILLATION UNIT
MAIN COLUMN
VACUUM COLUMN
VACUUM SYSTEM
STEAM
NAPHTHA
KEROSENE
DIESEL
ATMOSPHERIC GAS OIL
STEAM
CRUDE
LIGHT VACUUM GAS OIL
HEAVY VACUUM GAS OIL
SLOP WAX
VACUUM BOTTOMS

Main column sidestream fractions are first collected in trap out draw trays at various points up the column. To avoid flooding the top section of the column with overhead reflux, some liquid from each of the side draw trays is withdrawn, cooled by exchange and coolers, and returned to the column as intermediate reflux.

The sidestream material contains a considerable amount of lower boiling material that would be more valuable in the next lighter product. To accomplish this as well as to meet product flash point specifications, sidecut strippers are used on each sidestream. Stripping is done with steam. Vapors from the stripper are returned to the main column just above the draw off tray. Stripped product from the bottom of the stripper is heat exchanged, cooled, and sent to storage. Reduced crude from the bottom of the main column is also stripped with steam before passing to vacuum distillation.

The reduced crude is a heavy bottoms material that still contains some relatively valuable gas oil. To flash off this gas oil at normal pressures would require heating to a temperature at which thermal decomposition (cracking) occurs. To separate this gas oil at an acceptable temperature, a vacuum system is employed. The vacuum is generally pulled by means of a three-stage steam ejector system.

The reduced crude is heated in a fired heater before flowing to the flash zone of the vacuum column. Light vacuum gas oil (LVGO), heavy vacuum gas oil (HVGO), and vacuum pitch are taken as products. Vacuum pitch from the bottom of the tower is heat exchanged and cooled somewhat before flowing to storage. A heavy, high metal-containing liquid is accumulated in the bottom collector pan. This material is withdrawn from the column with a portion returned as spray reflux. The net material, called slop wax, is unsuitable for blending into gas oil and is therefore cooled and directed to storage with the vacuum pitch. Heavy vacuum gas oil is withdrawn from an intermediate collector pan. A portion is returned to the column as hot spray reflux and the remainder is cooled by heat exchange. Some of the cooled HVGO is returned to the column as intermediate reflux while the net product is further cooled and sent to storage. Light vacuum gas oil is collected from a point near the top of the column and pumped through a cooler. Some of the cooled LVGO is refluxed to the column and the net product is sent to storage. All non-condensed material is pulled from the top of the column through the ejector jets. There are usually three stages of jets with a cooler after each stage. All condensed hydrocarbons are recovered while the non-condensable gases are vented to a separate burner in the vacuum column heater. The condensed steam is routed to the process waste water system.

GAS CONCENTRATION UNITS

Introduction

The purpose of the gas concentration units is to separate the light ends from the crude unit and various conversion units into a fuel gas stream, a C_3/C_4 stream, and a gasoline stream. There will be three gas concentration units in the plant:

- A saturates gas concentration unit handling light ends chiefly from the crude unit and reformer
- An unsaturates gas concentration unit for the FCCU
- An unsaturates gas concentration unit integral with the Flexicoker

Process Description

Feed to the gas concentration units consists of liquid and vapor streams. The vapor stream is chiefly methane and ethane but contains appreciable quantities of propane and heavier components. The unstabilized liquid stream is chiefly propane and heavier but contains quantities of ethane and lighter components.

These streams are mixed in a feed separator. The resulting vapor is passed to an absorber where it is contacted with a gasoline stream which absorbs propane and heavier components. The overhead vapor is routed to a sponge absorber where a kerosene type stream is used to absorb residual heavy components from the vapor. The sponge absorber overhead consisting of ethane and lighter is routed to the fuel gas system. Liquid bottoms from the absorber is routed to the feed separator.

A quantity of wash water is injected into the vapor feed ahead of the feed separator. The purpose of this water wash is to remove salts and corrosives to protect downstream processing units.

Liquid from the feed separator is routed to the stripper where ethane is stripped from the liquid by applying heat with a reboiler. Vapor overhead is routed to the feed separator. Liquid bottoms is routed to a debutanizer column where C_3 and C_4 components are fractionated from the gasoline. This C_3 and C_4 is subsequently separated in a downstream depropanizer.

CATALYTIC REFORMER

Introduction

The UOP continuous reforming technology will be used for naphtha reforming. In this process naphtha is catalytically reformed into aromatics and high octane motor gasoline. As a result of dehydrogenation reactions, a considerable quantity of by-product hydrogen is produced. Feed to the unit has been hydrotreated in the naphtha hydrotreater to remove sulfur to a level of 0.5 ppm.

TYPICAL GAS CONCENTRATION UNIT

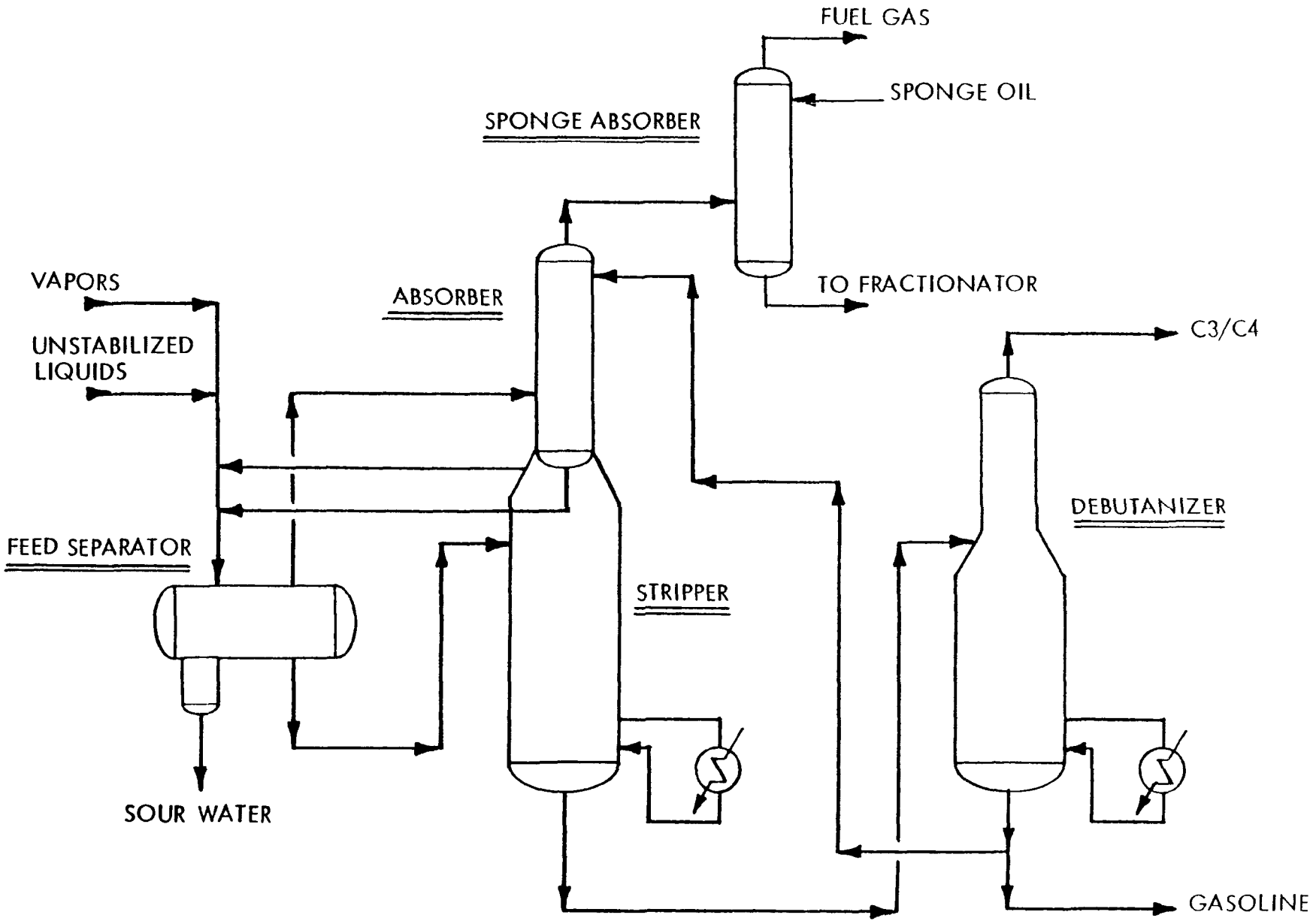

Process Description

Prefractionation

Fresh feed from the hydrotreater is routed to a deisohexanizer where isohexane and lighter components are removed from the reformer feed in a conventional fractionating column. These light components are not improved by reforming, and therefore it is advantageous to remove them from the reformer feed stream.

Reformer

Feed to the reformer is combined with a circulating stream of hydrogen and heated by exchange with the reactor effluent. The feed thus flows to a series of three fired heaters and three reactors which contain a bimetallic catalyst. The fired heaters supply the heat required for the endothermic reactions which predominate.

Effluent from the final reactor passes through heat exchange with incoming feed and is further cooled by exchange with air and water. The effluent then flows to a separator where a hydrogen rich stream is separated and recycled to join fresh feed. The net hydrogen make is compressed and routed to the plant hydrogen system. The liquid from the separator is routed to a debutanizer where butanes and lighter components formed in the reactors are removed from the reformate. These light components are then sent to the saturates gas concentration unit.

Catalyst continuously circulates through each of the three reactors which are stacked on one another. Catalyst from the final reactor is transported to the regenerator where a small amount of carbon formed by hydrocracking side reactions is combusted. The flue gas formed in the regeneration combustion contains carbon dioxide and water and trace amounts of chlorine (less than 1 percent). Catalyst from the regenerator is then transported to the lead reactor. The transport medium to the regenerator is nitrogen which is vented to the atmosphere after a small quantity of catalyst fines is removed in a dust collector. Regenerated catalyst is transported in a hydrogen medium to the top of the stacked reactors.

DEISOPENTANIZER

Introduction

Overhead from the deisohexanizer contains mainly C5 and C6 paraffins and the overall octane of this stream is low, about 65 Research Octane Number Clear (RON), making it undesirable for gasoline blending.

CATALYTIC REFORMING PROCESS

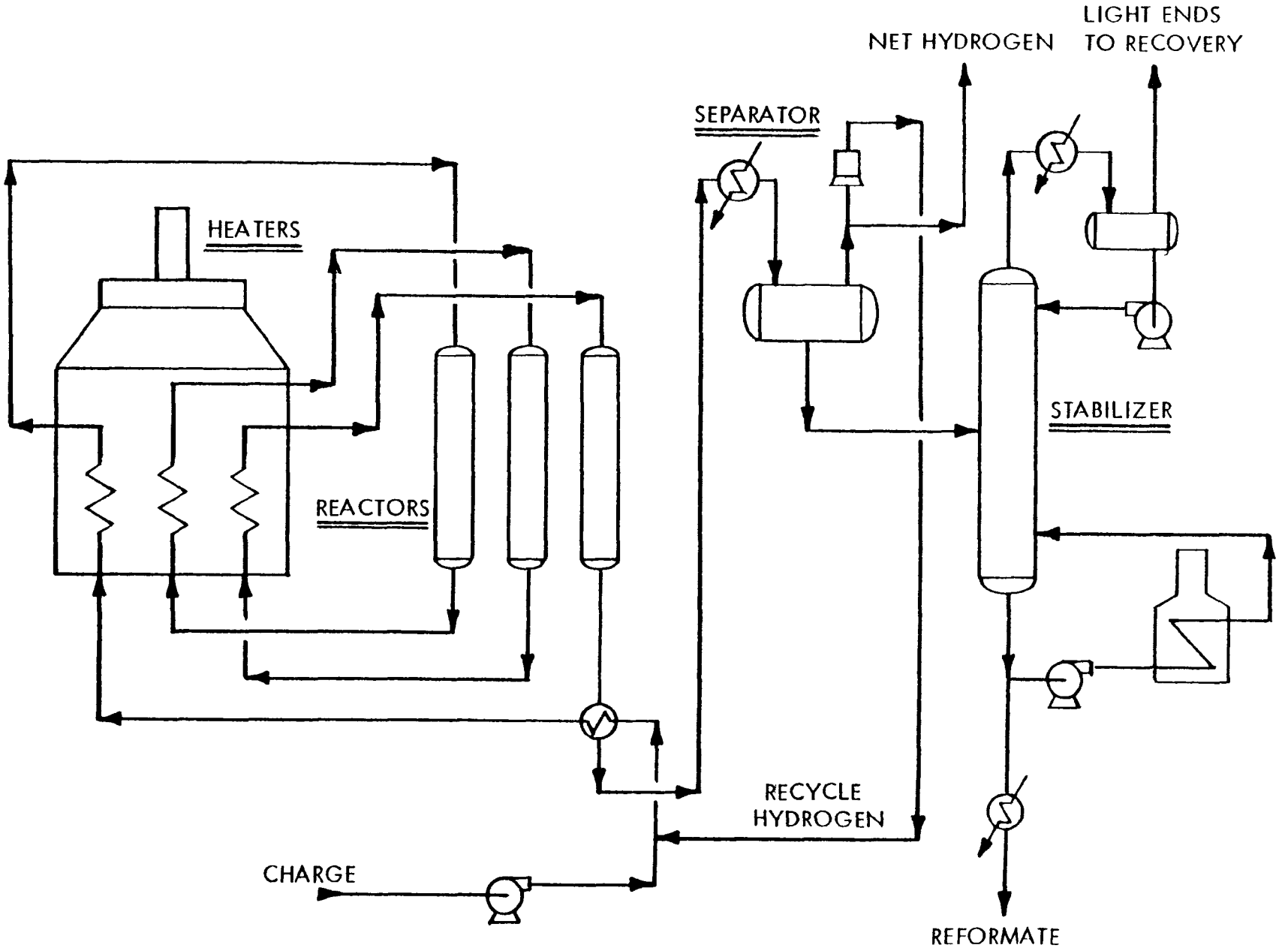

Isopentane, however, has a Research Octane Number (greater than 90) and is therefore a reasonably good gasoline component and is separated for gasoline blending.

Process Description

Overhead from the deisohexanizer flows through feed to bottoms heat exchange and to the deisopentanizer. This is a typical refluxed column. Isopentane is produced overhead and routed to gasoline blending. The bottoms stream containing the normal pentane and hexane is routed to paraffinic naphtha along with raffinate from the Sulfolane unit.

SULFOLANE/BTX SEPARATION

Introduction

The Sulfolane process is a commercially proven solvent extraction technique for recovery of high purity aromatics (particularly benzene, toluene and xylenes) from hydrocarbon mixtures. The solvent utilized in the process is tetra hydrothiophene, 1,1-dioxide (Sulfolane).

Prefractionation

Reformate is first prefractionated to separate a light reformate product containing benzene, toluene, xylene, and nonaromatics in the same boiling range. The light reformate is produced overhead of a conventional fractionator and flows to the Sulfolane Extraction Unit. The bottoms product, heavy reformate, is routed to motor gasoline.

Sulfolane Extraction

Fresh feed enters the extractor and flows upward, counter-current to a stream of lean solvent. As the feed flows through the extractor, aromatics are selectively dissolved in the solvent, and raffinate of low aromatics content is withdrawn from the top of the extractor.

Rich solvent from the extractor enters the extractive stripper, in which partial stripping of hydrocarbon from the rich solvent takes place. The non-aromatic components having volatilities higher than that of benzene under conditions existing in the column are essentially completely stripped from the solvent and removed in the overhead stream. This stream is returned to the extractor as reflux for re-recovery of any aromatics contained therein. The bottoms stream consists of solvent and aromatic components, substantially free of non-aromatics.

SULFOLANE PROCESS

(EXTRACTION SECTION)

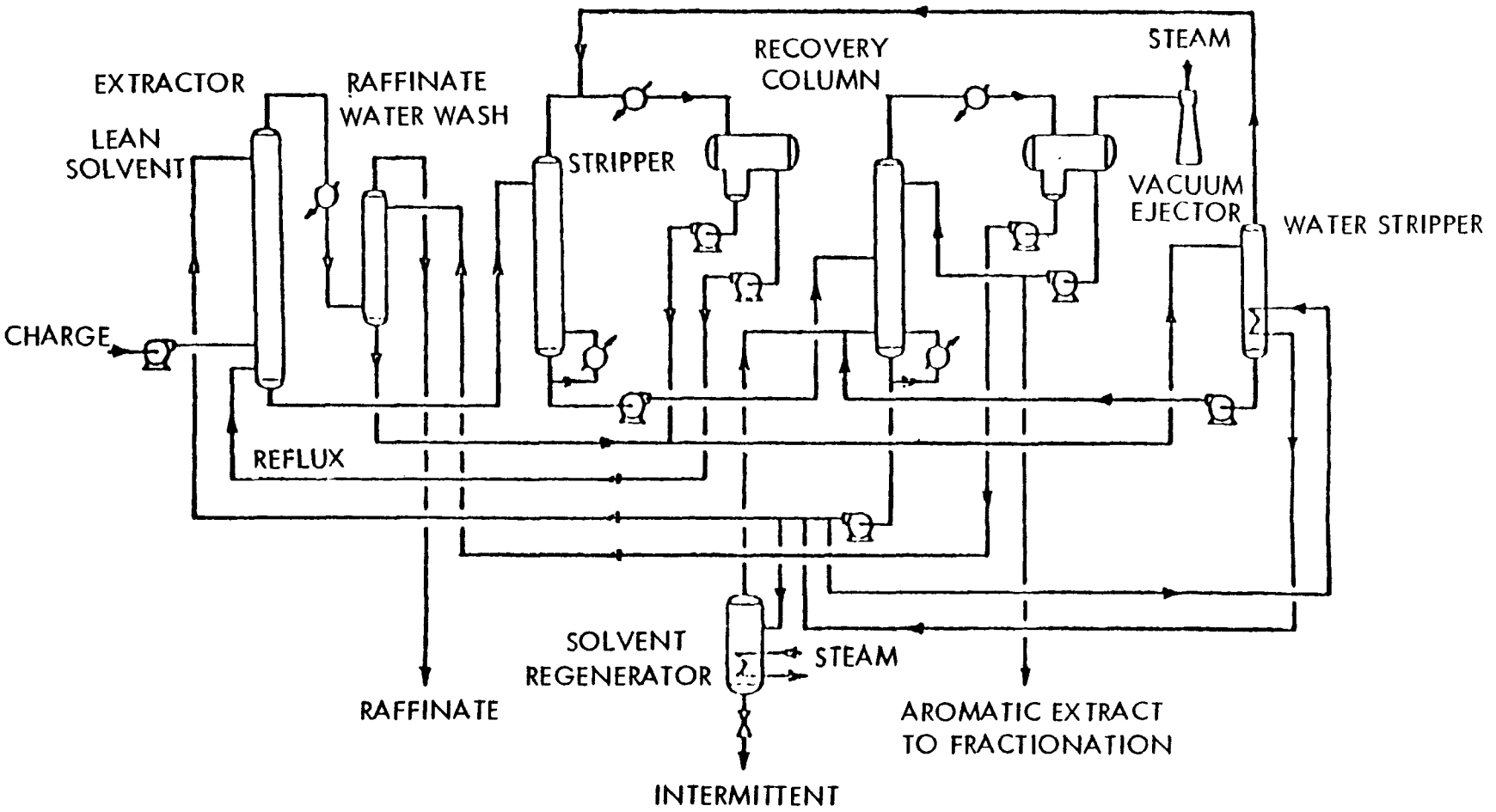

Solvent from the extractive stripper enters the recovery column, in which the aromatic product is separated from the solvent stream. Because of the large difference in boiling point between sulfolane and the heaviest desired aromatic product, this separation is accomplished readily. Lean solvent from the column bottom is returned to the extractor.

Raffinate from the extractor is contacted with water to remove dissolved sulfolane, and the rich water is returned to the extract recovery column to reclaim its sulfolane content. This raffinate is then routed to paraffinic naphtha storage.

Trace quantities of oxygen in the feed and from system leaks degrade the solvent irreversibly. A slip stream of solvent (2 percent of the circulating stream) is sent to the solvent reclaimer which boils the solvent overhead. The bottoms from this regenerator are routed to the flexicoker for reprocessing into fuel products.

Clay Treating

Sulfolane unit extract will contain trace amounts of unsaturates and residual non–hydrocarbon compounds which might adversely affect the acid wash color tests of the final products. To eliminate these trace impurities, the extract is clay treated prior to fractionation. The clay treat is non–severe and clay consumption is minimal.

BTX Fractionation

The treated extract is directed to a series of three fractionating columns where chemical purity benzene, toluene, and C_8 aromatics are recovered as distillate products. Heavy aromatics which may have been contained in the unit feed are yielded as a bottoms product from the fractionation section and are directed to the refinery gasoline pool. A small amount of water produced overhead of the benzene column is recycled to the Sulfolane extraction unit.

FLUID CATALYTIC CRACKING PROCESS

Introduction

Fluid Catalytic Cracking is a process for conversion of straight run atmospheric gas oil, vacuum gas oils and heavy stocks recovered from other operations into high octane gasoline, light fuel oils, and olefin–rich light gases. The product gasoline has a good octane blending number and good overall gasoline quality. Further, "cat" gasoline is complemented by the characteristics of the alkylate produced from the gaseous olefinic by-products.

Process Description

Reactor/Regenerator Section

In the operation of the Fluid Catalytic Cracking unit, fresh feed and hydrotreated cycle oil are introduced into the bottom of the reactor riser together with a controlled amount of regenerated catalyst. The charge may be preheated either by heat exchange or, for some applications, by means of a fired heater.

The hot regenerated catalyst vaporizes the feed and the resultant vapors carry the catalyst upward through the riser with a minimum of back mixing. At the top of the riser the desired cracking reactions have been completed and the catalyst is quickly separated from the hydrocarbon vapors to minimize further secondary reactions. The catalyst/hydrocarbon mixture from the riser is discharged into the reactor vessel through slotted cross arms which achieve a significant degree of catalyst/gas separation. Final separation of catalyst and product vapor is accomplished in two stages of cyclone separation. The catalytic cracking reactions occur essentially completely within the riser; the "reactor" shell serves primarily as a container for cyclone separators and as a disengaging space.

The reactor effluent is directed to the FCC main fractionator for resolution into gaseous light olefin coproducts, "cat" gasoline, and cycle stocks. The spent catalyst drops into the stripping section where a countercurrent flow of steam removes interstitial and some adsorbed hydrocarbon vapors. Stripped spent catalyst descends through a stand pipe and into the regenerator.

During the cracking reaction, a carbonaceous by-product is deposited on the circulating catalyst. This material, termed "coke," is continuously "burned" off the catalyst in the regenerator. The main purpose of the regenerator is to reactivate the catalyst so that, when returned to the conversion section, it is in optimum condition to perform its cracking function. The regenerator serves to combust the coke from the catalyst particles and, at the same time, impart sensible heat to the circulating catalyst which is utilized in satisfying the thermal requirements of the unit. A large air blower is used to provide the combustion air which is distributed throughout the fluid catalyst bed. The catalyst entrained in the flue gas is removed with a two stage system of cyclones installed in the regeneration vessel. The flue gas from the regenerator contains primarily nitrogen and carbon dioxide with trace quantities of carbon monoxide, sulfur dioxide, nitrous oxides, and catalyst particulates.

The regenerator is operated at conditions that achieve "complete" combustion of CO to CO2. This in situ combustion of carbon dioxide obviates the need for an external CO boiler and results in a flue gas concentration of CO of less than 500 ppmv. In addition, the practice of CO combustion enhances gasoline yield. The sensible heat of the 1,300°F flue gas is recovered in a waste heat boiler. Final cleanup of the flue gas is effected by an electrostatic precipitator.

FLUID CATALYTIC CRACKING PROCESS

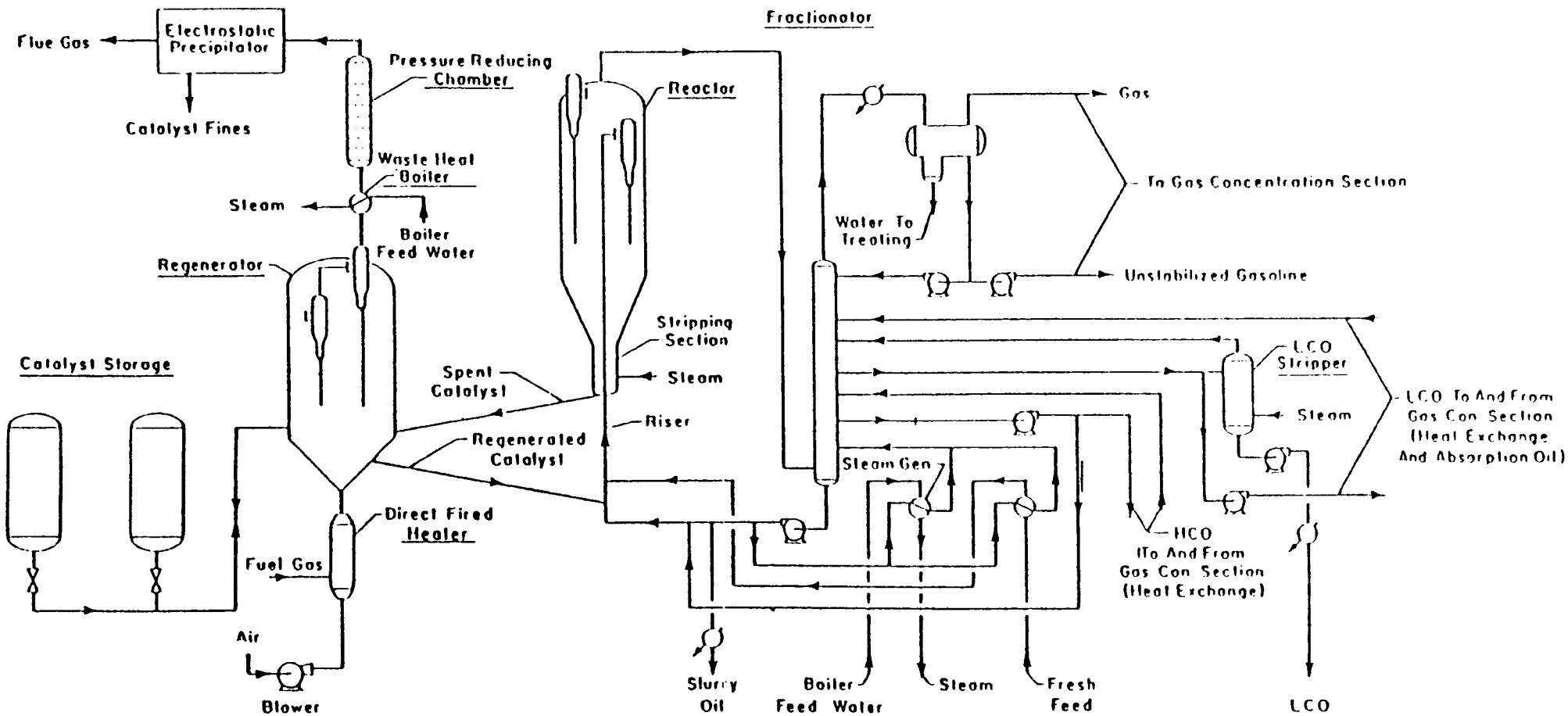

In order to maintain the activity of the working catalyst inventory at the desired level and to make up for any catalyst lost from the system with the flue gas, fresh catalyst is introduced into the circulating catalyst system from a catalyst storage hopper. An additional storage hopper is provided to contain spent catalyst which can be withdrawn from the circulating system when it is necessary to purge inactive catalyst to maintain the desired working activity.

Fractionation and Gas Concentration Sections

Reactor product vapors are directed to the main fractionation column. FCC naphtha and gaseous, olefin-rich coproducts are taken overhead and routed to the gas concentration unit. Reactor stripping steam is condensed in the overhead condenser and the resulting sour water containing hydrogen sulfide, phenol, and ammonia is routed to the sour water stripper. Wash water cascaded from the gas concentration unit is injected upstream of the overhead condenser to prevent salt deposition and then routed to the sour water stripper. Light cycle oil is recovered as a sidecut with the net yield of this material being stripped for removal of light ends and sent to storage. Heavy cycle oil is recycled to the reactor after hydrotreating to saturate polyaromatics for improved gasoline yield. A small flow of main column bottoms is recycled to the reactor section where it is combined with fresh feed and directed to the reactor riser. Net column bottoms is yielded as slurry or clarified oil.

Because of the high efficiency of the catalyst-hydrocarbon separation system utilized in modern reactor design, catalyst carry-over to the fractionator is minimized and it is not necessary to clarify the net heavy product yielded from the bottom of the fractionator.

Unsaturates Gas Plant

In the gas concentration unit, gas from the FCC main column overhead receiver is compressed and directed with primary absorber bottoms and stripper overhead gas through a cooler to the high pressure receiver. Wash water is injected upstream of the cooler to remove hydrogen cyanide which can result in corrosion of the downstream equipment. Gas from the high pressure receiver is routed to the primary absorber where it is contacted by the unstabilized gasoline from the main column overhead receiver. Primary absorber off gas is directed to a secondary or sponge absorber. A circulating stream of light cycle oil from the main column is used as absorption oil in the sponge absorber. Tail gas from the sponge absorber, consisting mainly of hydrogen sulfide plus C2 and lighter coproducts, is directed to a fuel gas amine treating unit. Primary absorber bottoms is stripped and routed to the debutanizer where an olefin rich C3/C4 stream is recovered overhead. The gas concentration unit is not designed, per se, on the basis of H_2S rejection; the unit is designed to minimize C_3 losses by recovering with the C_3/C_4 product a specified amount of C2 (generally equivalent to not more than one mole percent of the propane) which can be tolerated in the alkylation unit. Contained H2S is then removed in an

amine system prior to Merox treating for mercaptan removal. Stabilized FCC gasoline is yielded from the debutanizer as a bottoms product. The FCC gasoline is treated in a Merox sweetening system prior to storage.

UOP HF ALKYLATION PROCESS

Introduction

The HF Alkylation process for motor fuel production catalytically combines light olefins (primarily mixtures of propylene and butylenes) with isobutane, to produce a branched chain paraffinic fuel that is a high quality component of a gasoline pool. The alkylation reaction takes place in the presence of hydrofluoric acid (HF) under conditions selected to maximize alkylate yield and quality. The alkylate product possesses excellent anti-knock properties. It is clean burning, has high research and motor octane numbers, and an excellent performance rating.

Process Description

The alkylation of olefins with isobutane is complex, being characterized by simple addition as well as by numerous side reactions. Primary reaction products are the isomeric paraffins containing carbon atoms that are the sum of isobutane and the corresponding olefin. It is generally believed that alkylation proceeds through a carbonium ion formed from the isobutane in the presence of the acid catalyst. The carbonium ion reacts with the olefin to produce a heavier ionic structure, which in turn reacts with isobutane to produce a primary reaction product and a new carbonium ion to continue the general reaction. However, secondary reactions, such as hydrogen transfer, polymerization, isomerization, and destructive alkylation also occur resulting in formation of secondary products both lighter and heavier than the primary products.

The factors which promote the primary and secondary reaction mechanism differ as does the response of each to changes in operating conditions or design options. Not all secondary reactions are undesirable; for example, they make possible the formation of iso-octane from propylene and amylenes. In the ideally designed and operated system, the primary reactions should predominate but not to the complete exclusion of the secondary ones. For HF Alkylation the optimum combination of plant economy, product yield, and quality is achieved with the reaction systems operating at essentially cooling water temperature, a considerable excess of iso paraffin, contaminant free feedstocks, and a well-engineered reaction system.

To minimize acid consumption and ensure good alkylate quality, the feeds to the alkylation unit should be dry and of low sulfur content. Normally, a simple desiccant drying system is included in the unit design package. Feed treating in a Merox unit for mercaptan sulfur removal can be an economic adjunct to the

HF ALKYLATION PROCESS

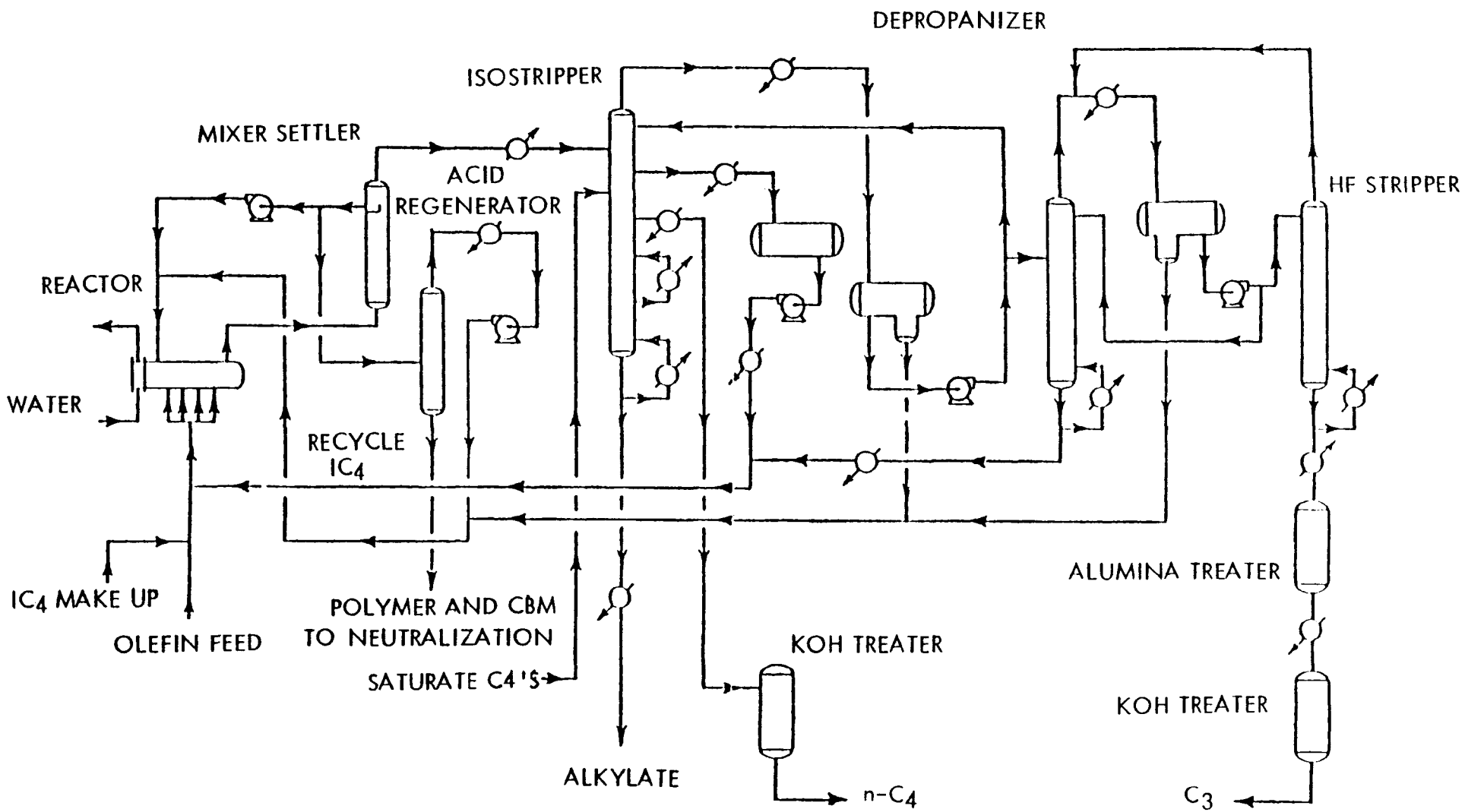

alkylation unit for those applications where the feedstocks of more than low sulfur content are processed.

Process Description - Reaction Section

Treated and dried olefinic feed is charged along with recycle and makeup isobutane (where applicable) to the reactor section of the HF unit. The combined feed enters the shell of a horizontal heat exchanger through several nozzles positioned to maintain an even temperature throughout the reactor. Heat of reaction is removed by heat exchange with a large volume of water having a low temperature rise. This cooling water is then available for further use elsewhere in the unit. The effluent from the reactor-exchanger enters the settler from which the settled acid is returned back into the reactor-exchanger.

The hydrocarbon phase which contains dissolved HF is directed from the settler, preheated, and charged to the isostripper. Outside saturate butane makeup (where applicable) is also charged to the isostripper. Product alkylate is recovered from the bottom of the column. Normal butane which may have entered the unit with the olefinic feed and makeup isobutane is withdrawn with the bottoms to meet alkylate vapor pressure requirements. Normal butane in excess of that required to meet alkylate vapor pressure is withdrawn as a sidecut.

Isostripper overhead consists mainly of isobutane, propane, and HF. Recycle isobutane is recovered as a sidecut which is recycled to the reactor section. A drag stream of overhead material, which has been propane enriched, is charged to the HF stripper. The HF stripper net bottoms stream is withdrawn, defluorinated, and charged to the gas concentration section (C_3/C_4 splitter) to prevent a build-up of propane in the HF Alkylation unit. The HF stripper overhead vapors are returned to the isostripper overhead system.

Auxiliary neutralizing and scrubbing equipment is included in the plant design to ensure that all materials leaving the unit during both normal and emergency operation are acid free.

To the extent possible, the number of relief valves is minimized. The acid sections of the unit are designed to be easily isolatable to minimize the amounts of acid or acid–containing materials to be handled in the event of an emergency.

Process Description - Neutralization Section

The neutralization section is designed to minimize the amount of waste, offensive materials, and undesirable by-products. It is impractical to release acid–containing vapors to the regular relief gas system because of the corrosion and odor problems which would result. The system is composed of the relief gas scrubber, KOH mix tank, circulating pumps, and a KOH regeneration tank.

All acid vents and relief valves are piped to this relief section. Gases pass up through the scrubber and are contacted by a circulating KOH solution to neutralize the HF. After the neutralization of the HF, the gases may be safely released into the refinery flare system.

The KOH is regenerated on a periodic basis in the KOH regeneration tank using lime to form CaF_2 and KOH. The lime settles to the bottom of the tank and is directed to the neutralizing basin.

The neutralizing basin, or CBM pit, is for the neutralizing of any acidic water from acid sewers or in some cases, CBM from the acid regenerator. Lime is used to convert any fluorides into calcium fluoride before any waste effluent is released into the refinery sewer system. Calcium fluoride is a non-toxic solid waste which could be used for land fill. However, because of the unreacted lime, this material will be held in a pond designed for a 20 year retention period.

GASOLINE POLYMERIZATION PROCESS
MOTOR FUEL PRODUCTION

Introduction

The Catalytic Condensation process is a processing technique utilizing a solid phosphoric acid (SPA) catalyst to promote the condensation of gaseous olefins to produce a wide range of liquid olefinic products suitable for gasoline blending.

Process Description

The feed stream is directed to a combined feed surge drum. Feed diluent, propane, is recycled to the surge drum. Combined feed is preheated and charged to the reactor. Control or moderation of the heat release in the reactor is accomplished both by feed dilution and by quenching between the catalyst beds in the reactor. Reactor effluent is directed to a flash drum. The flash vapor is condensed and the condensate cooled. Some of the condensate is recycled for use as feed diluent and quench. Flash drum liquid flows to a stabilizer where poly gasoline and butane is withdrawn as a bottoms product and C3 is recovered overhead. The butane/gasoline mixture is then separated in a debutanizer.

HYDROTREATING UNITS

Introduction

Hydrotreating removes objectionable materials from petroleum distillates by selectively reacting sulfur, nitrogen, and oxygen-containing compounds with hydrogen and by saturating olefinic hydrocarbons and polycyclic aromatics.

GASOLINE POLYMERIZATION UNIT

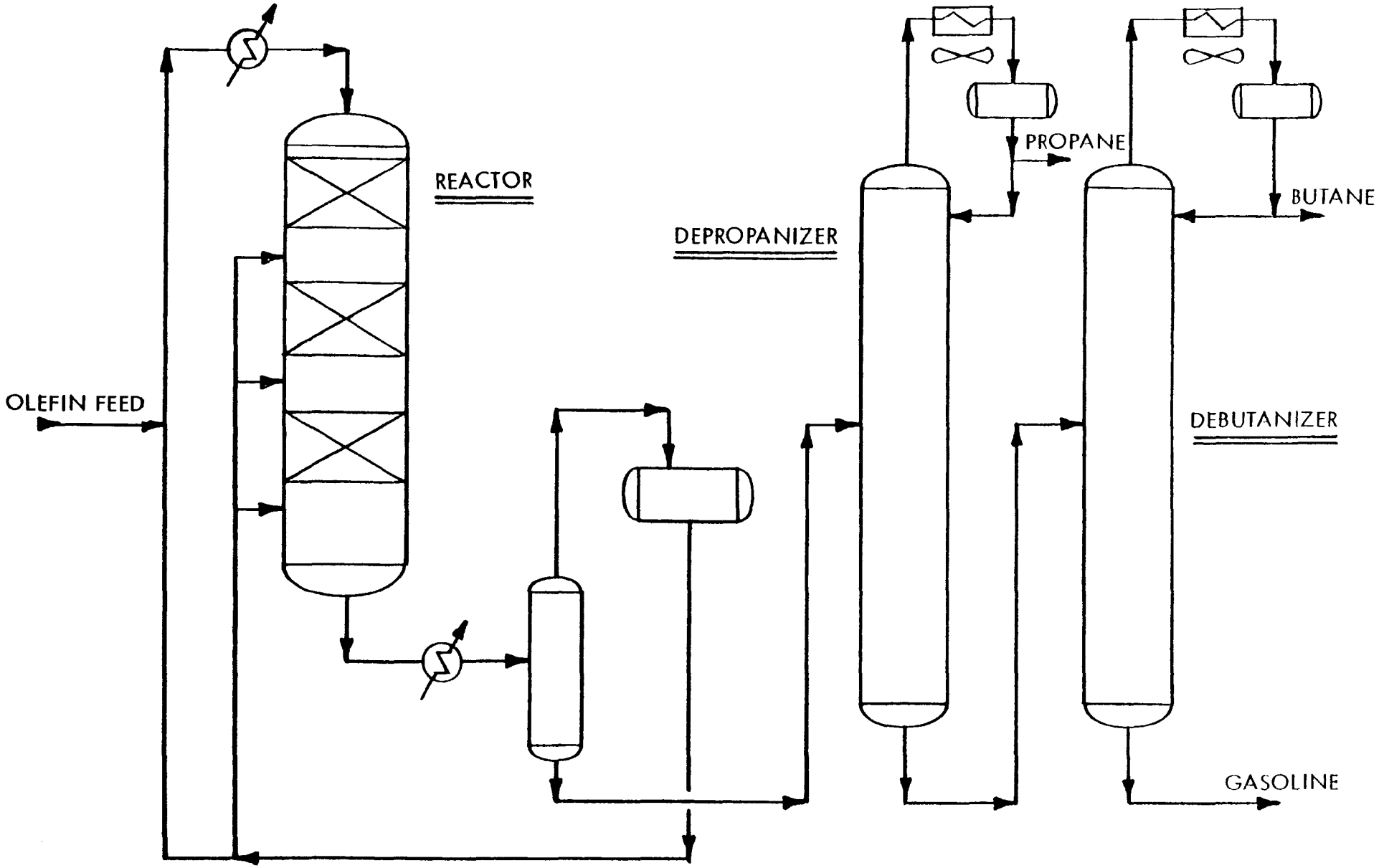

Naphtha generally is purified for subsequent processing in catalytic reforming operations. Heavier distillates, ranging from jet fuels and kerosene through heavy vacuum gas oils, are treated for sulfur/nitrogen removal to meet specifications associated with emission standards and/or for odor and color improvement. Gas oil feed to FCCU feed is hydrotreated for sulfur and nitrogen removal, reduction in Conradson carbon, and saturation of polycyclic aromatics.

Process Description

The chemistry of the hydrotreating process is essentially that of selective hydrogenation. In removal of contaminants, it involves the controlled breaking of the molecular chain or ring at the point where the sulfur, nitrogen, or oxygen atom is joined to carbon atoms. This breaking is accomplished by the introduction of hydrogen with production of hydrogen sulfide, ammonia, light hydrocarbons or water, respectively. The resultant hydrocarbon reaction product usually remains either as one or more aliphatic hydrocarbons, or as an alkyl group on an aromatic or naphthenic hydrocarbon. These hydrocarbon reaction products usually have larger liquid molecular volumes than does the parent sulfur, nitrogen, or oxygen-containing reactants. Due to the fact that only a small amount of cracking of carbon-to-carbon bonds occurs and olefins and some aromatics are hydrogenated, the yields of liquids from hydrotreating operations are in excess of 100 volume percent of the chargestock.

The general process flow for all hydrotreaters is basically similar. The chargestock together with the makeup hydrogen and recycle gas, are heated to reaction temperature in exchangers and a fired heater. In the reactor the contained sulfur, nitrogen, halogen, and oxygen impurities together with olefinic and polyaromatic hydrocarbons are converted over catalysts. All the hydrotreating reactions are exothermic, although the exothermic heat is relatively small when minimal quantities of these impurities are present. The reaction product is cooled through exchangers and air and water coolers en route to the product separator. A small amount of water is injected into the effluent stream to prevent the deposit of ammonium salts. Net separator gas is recycled and combined with hydrogen-rich makeup gas while the separator hydrocarbon liquid, after heat exchange, is stripped in the stripper column to remove H2S and undesired light ends which are routed to the feed gas system. Water is removed from the separator via a water boot and routed to the sour water stripper. The stripper column bottoms product is sent to storage after exchange and cooling or directly to another processing unit.

Specific Process Applications

Naphtha Hydrotreater

The product must meet all the requirements of reformer feed, which in most cases will call for a simple desulfurization to 0.5 ppm sulfur.

HYDROTREATING UNIT

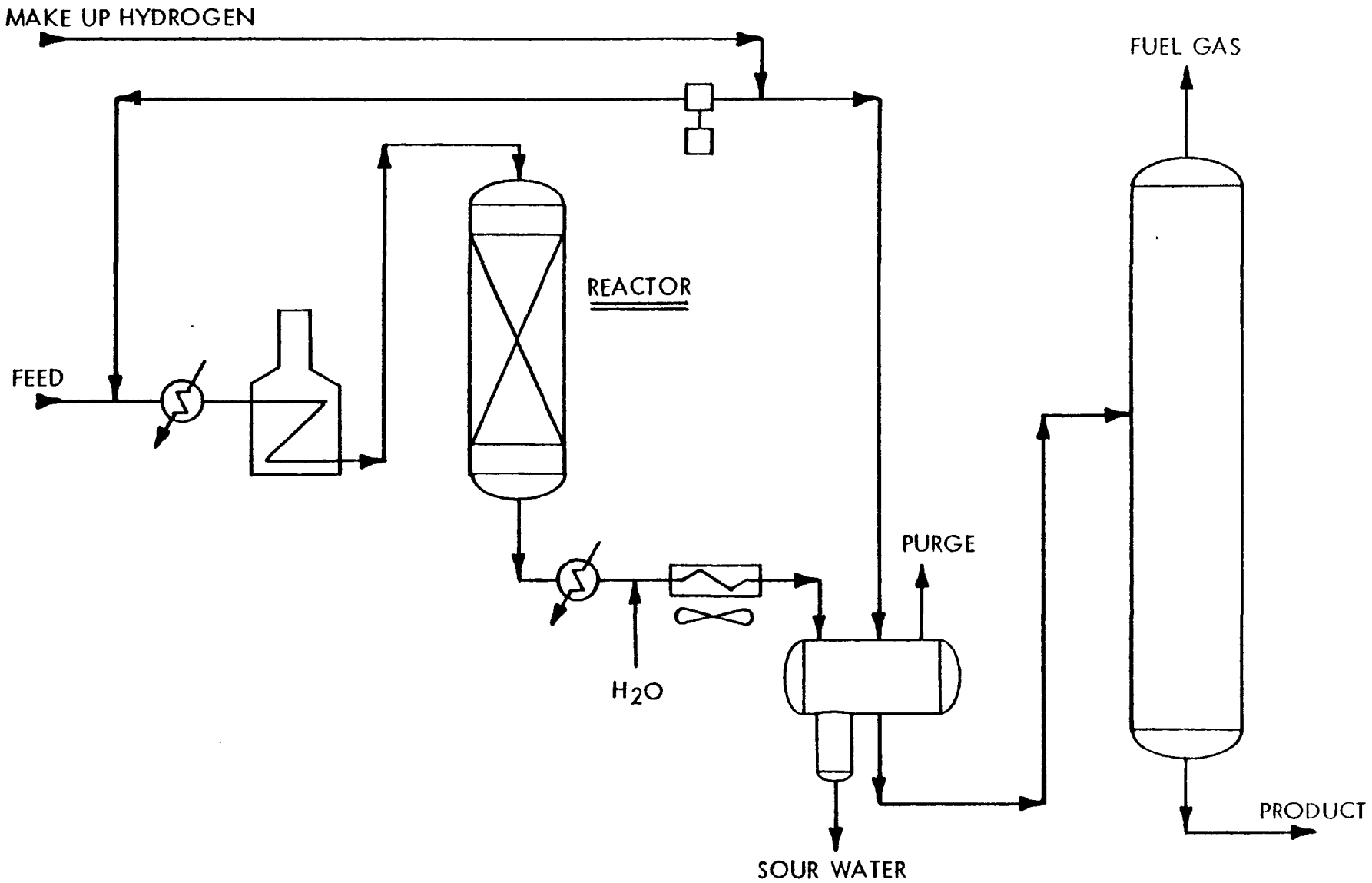

Gas Oil Desulfurizer

Hydrotreating of the FCCU feed reduces the sulfur dioxide emissions from the FCC unit, avoiding installation of expensive stack gas cleanup facilities. Concomitant with stack gas sulfur dioxide emission reduction, hydrotreating processing of FCC feed will also result in recovery of FCC products having significantly reduced sulfur contents, which eliminates the need for further hydrotreating of these materials. Additionally, use of hydrotreatment for reduction of sulfur, nitrogen, metals, carbon residue, and polycyclic aromatics results in lower FCC coke make, improved conversion capability, better yield structure, and improved product quality.

LCO Saturation

FCCU cycle oil recycle is hydrotreated to saturate the polycyclic aromatics in this stream. This hydrotreatment results in increased production of FCCU gasoline.

HYDROCRACKER

Introduction

Heavy atmospheric distillate and coker distillate are routed to a hydrocracker where they are cracked to yield gas, LPG, naphtha and jet fuel. Cracking is done over a fixed bed catalyst in the presence of hydrogen at elevated pressure.

Process Flow

In this system fresh chargestock along with fresh and recycle hydrogen are heat exchanged and further heated to the desired process temperature in a fired heater and contacted with the catalyst in the reactor. Hydrocracking reactions are exothermic; to control temperatures in the desired range, conversion per pass can be limited or intermediate cooling means such as quench gas can be used. The reactor effluent is heat exchanged with incoming feed and then air and water. The resulting vapor/liquid mixture then flows to a high-pressure separator. Hydrogen-rich gases are recycled along with fresh makeup hydrogen. High-pressure separator liquid is flashed into a low-pressure drum where most of the dissolved gases are evolved. The flash drum liquid is fed to a debutanizer with overhead sent to LPG recovery and bottoms to a fractionator for separation into the desired products. Fractionator bottoms boiling above the desired boiling range of the products is recycled for complete conversion.

Water is injected in the reactor effluent upstream of the air cooler to prevent deposition of ammonium compounds. This water is separated out in the high pressure system and routed to the sour water stripper.

HYDROCRACKING UNIT

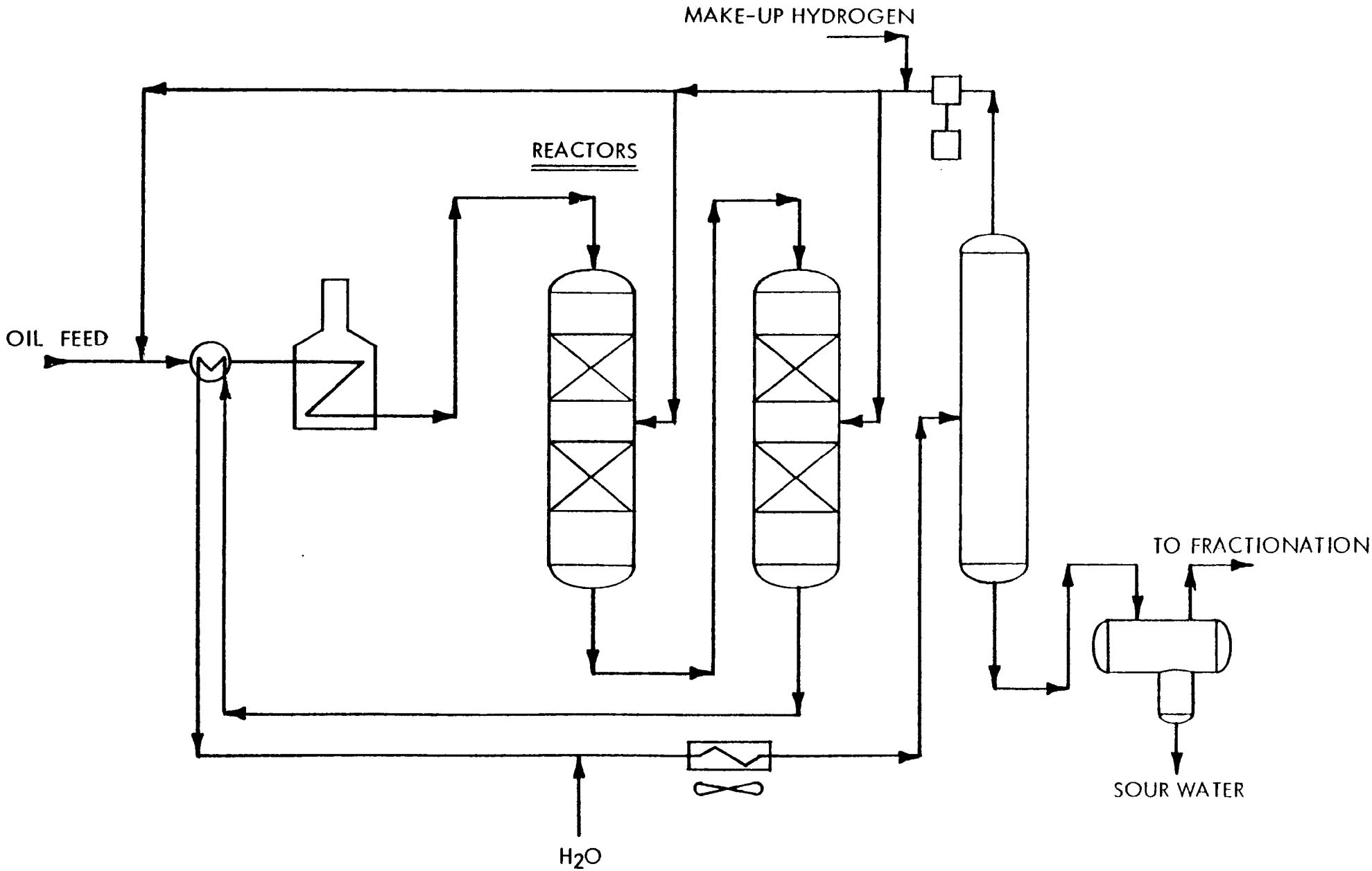

HYDROGEN PRODUCTION BY STEAM REFORMING

Introduction

The several hydrotreaters and the hydrocrackers are major consumers of hydrogen. While the catalytic reformer supplies a portion of the required hydrogen, the remaining requirement is supplied by steam reforming fuel gas and LPG.

The steam-hydrocarbon reactions are favored by high temperature and by low pressure. The lower the residual methane content desired, the higher the reforming temperature must be. The steam-hydrocarbon reactions are endothermic.

The reactions which occur in steam hydrocarbon reforming are as follows:

1. $C_nH_m + nH_2o \rightarrow nCO + \frac{(2n+m)}{2} H_2$

2. $CO + 3H_2 \rightarrow CH_4 + H_2O$

3. $CO + H_2O \rightarrow CO_2 + H_2$

These reactions are carried out in a furnace containing vertical tubes filled with a nickel catalyst to promote the reactions. Heat is applied externally by fuel firing to maintain an outlet temperature which is usually in the range of 1,300°F to 1,650°F.

The basic steps for the steam-hydrocarbon reforming process are desulfurization, reforming, two-stage CO conversion, CO2 removal, methanation, and compression. The heat in the process gas effluent is recovered to a large extent by steam generation and boiler feed water preheat, with low-level heat of the process gas providing the required reboil heat for the regeneration of the rich promoted hot carbonate solution when it is used for CO2 removal.

Reformer feed contains less than 0.5 percent olefins to prevent carbon formation and must be desulfurized to less than 1 ppm to prevent poisoning of the reformer catalyst and resultant loss of activity.

After desulfurization, the feedstock is mixed with super-heated steam and reformed in the catalyst-filled tubes of the furnace. Reforming is carried out by catalytically reacting the hydrocarbon vapors with a stoichiometric excess of steam. The overall reactions are highly endothermic; therefore the catalyst is contained in a number of parallel vertical tubes in the radiant section of the fired heater. The reformed gas products are hydrogen, carbon monoxide, carbon dioxide, and methane.

The reforming reaction is favored by high temperature, low pressure, and a high steam to carbon ratio. These conditions minimize methane slippage.

HYDROGEN PLANT

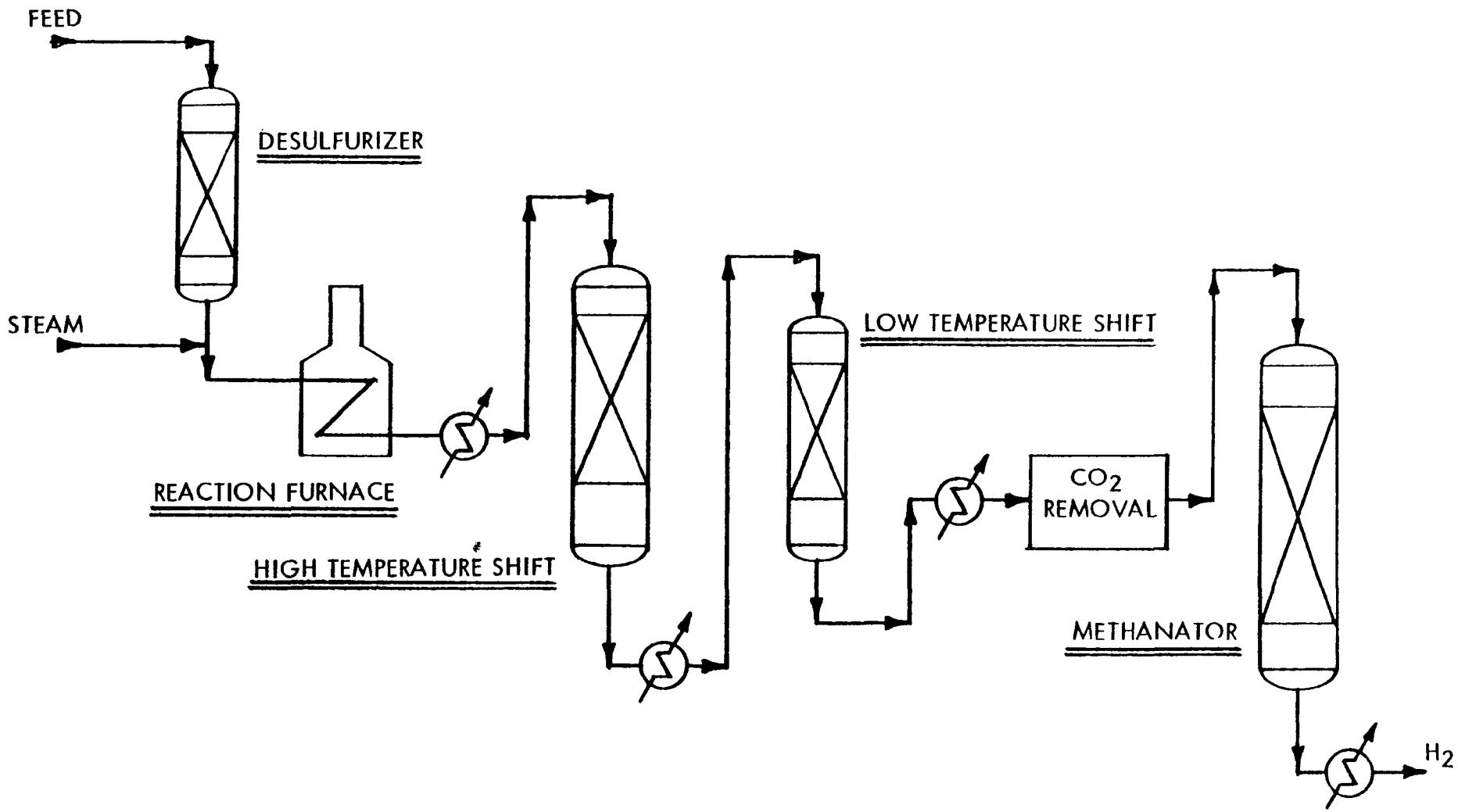

The processing scheme downstream of the reforming furnace is as follows:

- Heat recovery
- High temperature shift conversion
- Heat recovery
- Low temperature shift conversion
- Heat recovery and cooling
- Carbon dioxide removal
- Methanation of residual carbon oxides
- Cooling

The reformed gas is cooled and passed through the high and low-temperature shift converters with intercooling between the two reactors. The purpose of the shift converters is to minimize the concentration of carbon monoxide by reacting it with steam to produce carbon dioxide and hydrogen.

After cooling, the carbon dioxide is removed by one of the various available processes.

Residual carbon oxides from upstream processing, namely shift conversion and carbon dioxide removal, are undesirable for most catalytic processes and must be removed prior to the use of the hydrogen. In steam-reforming plants, carbon oxide conversion is carried out by means of a methanization reaction in the presence of catalyst.

FLEXICOKER

Introduction

The Flexicoker process is designed to upgrade heavy bottom of the barrel feedstocks by converting them to lighter products including clean fuel gas, gasoline, and distillates. Coking is a non-catalytic, thermal cracking process based upon the concept of "carbon rejection." The heaviest hydrogen-deficient portions of the feedstock are rejected as coke which contains essentially all of the feed metals and a substantial portion of the feed sulfur and nitrogen. The coking process is particularly attractive when no heavy fuel oil product is desired in the refinery. Materials that might normally be disposed of as No. 6 fuel oil are cracked into gas, naphtha, distillate and gas oil products. These products can then be further processed in the downstream units.

The Flexicoker process has one additional benefit. Essentially all of the coke is converted to low BTU fuel gas which can be burned in refinery boilers or process furnaces. In this manner over 90 percent of the coke can be gasified on typical coker feedstocks. This substantially reduces the amount of by-product coke which must be sold versus the historic coker processes.

The vacuum resid feedstock typically contains most of the metals content of the feedstock as well as complex nitrogen and sulfur containing compounds. These compounds are difficult to remove from the resid and pose severe environmental problems should this material be burned. By flexicoking the resid, one produces conventional light distillate and naphtha products which can be effectively treated for sulfur and nitrogen removal in downstream processes. Also the offgas, from both the Flexicoker and from the coke gasification facility, can be properly treated for hydrogen sulfide removal and sulfur recovery. Essentially all of the metals in the crude feedstock to the refinery will then end up in the coke fines.

Process Description

The Flexicoking process consists of a fluid bed reactor, a liquid product scrubber on top of the reactor, a heater vessel where circulating coke from the reactor is heated by gas and hot coke from the gasifier, gasifier vessel, a heater overhead gas cooling system, and a fines removal system.

Vacuum residuum feed is injected into the coker reactor where it is thermally cracked (typically at 950°F to 1000°F) to a full range of vapor products and a coke product. This coke product is deposited on the fluidized coke particles. The sensible heat, heat of vaporization, and endothermic heat of cracking residuum is provided by a circulating stream of hot coke from the heater. Cracked vapor products are quenched in the scrubber vessel. The heavier fractions are condensed in the scrubber and can be recycled back to the coking reactor. The lighter fractions not condensed in the scrubber proceed overhead into a conventional fractionator where they are split into gas, naphtha, distillate, and gas oil products much as a conventional atmospheric crude tower operates. Reactor coke is circulated to the heater vessel where it is heated by coke and gas from the gasifier and partially devolatilized, yielding a small amount of light hydrocarbon gas and residual coke. The circulating coke stream is sent from the heater to the gasifier where it is reacted at an elevated temperature between 1500 F to 1800°F with air and steam. In the gasifier, the mixture of hydrogen, carbon monoxide, nitrogen, carbon dioxide, hydrogen sulfide, and water is formed . This gasifier product gas, referred to as coke gas, is returned to the heater and is cooled by cold coke from the reactor to provide a portion of the reactor heat requirement. A return stream of coke sent from the gasifier to the heater provides the remainder of the heat requirement. Energy is recovered from the hot gas leaving the heater by using it to generate high pressure steam. After coke fines removal from the gas in cyclones and Venturi scrubbers, the solids-free coke gas is sent to a hydrogen sulfide removal unit.

SIMPLIFIED FLEXICOKING FLOW PLAN

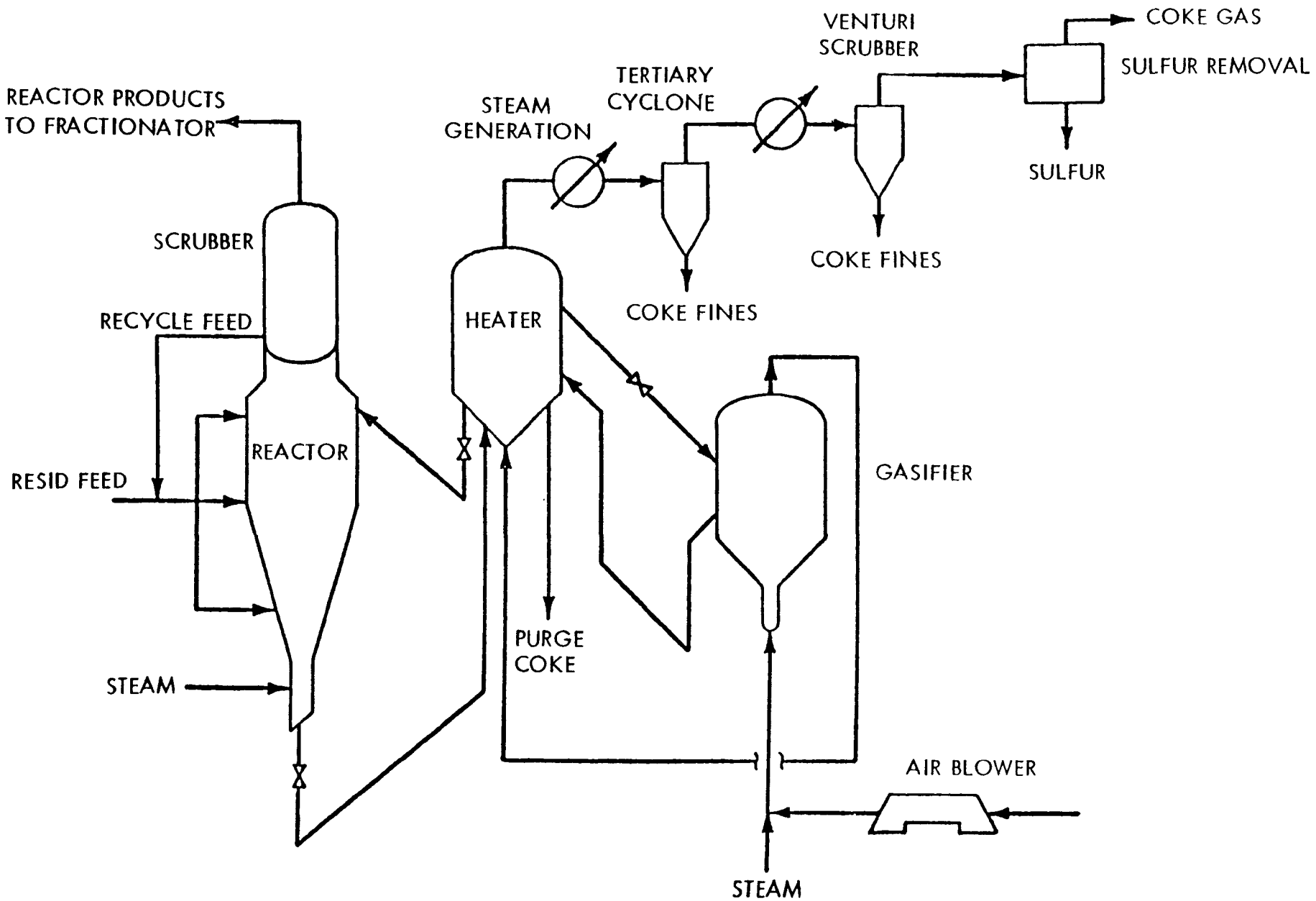

The lighter fractions from the coker gas concentration unit are sent to a multitude of process units within the refinery complex. The butane and lighter off gases are sent to the unsaturates gas plant along with light gas from the catalytic cracking unit. The coker naphtha is sent to the naphtha desulfurizer unit for removal of sulfur, nitrogen, and light ends prior to catalytic reforming. Coker distillate is combined with atmospheric gas oil from the crude distillation unit and is sent to the distillate hydrocracker. Finally, the coker gas oil is combined with virgin vacuum gas oils and sent to the gas oil desulfurizer prior to feeding the catalytic cracking unit.

There is some net coke production—in this case about 20 tons per day. This net production is necessary to purge metals from the system. The coke purge can be from the heater, third stage cyclone scrubber, or Venturi scrubber. The purge coke is maintained in a closed system and is transported to silo storage.

UOP MEROX PROCESS

Introduction

The UOP Merox process is a catalytic process, developed for the removal of sulfur present as mercaptans (Merox extraction). The process is based on the ability of a sulfonated cobalt phthalocyanine catalyst to accelerate the oxidation of mercaptans to disulfides at or near ambient temperatures. Oxygen is supplied from the atmosphere. The reaction will proceed only in a strongly alkaline environment; the overall reaction can be written:

$$RSH + 1/4\ O_2 \rightarrow 1/2\ RSSR + 1/2\ H_2O$$

Mercaptans are more or less completely removed using caustic soda solution as the extraction solvent, with subsequent regeneration of the solvent by bringing it into contact with air and catalyst, followed by separation of the disulfides which are insoluble in the solvent (see Figure 12, Merox Extraction).

Process Flow

The fresh feed is charged to an extraction column, in which mercaptans are countercurrently extracted by a caustic stream containing Merox catalyst. The treated material passes overhead to a settler in which any entrained caustic solution is separated and returned to the circulation system. The mercaptan-rich caustic solution from the bottom of the extraction column flows to the regeneration section through a steam heater which functions principally to maintain temperature during cold weather. Air is injected into this stream and the mixture flows upward through the oxidizer where the mercaptans are converted to disulfides. The oxidizer effluent flows into the disulfide separator where spent air, disulfide oil, and the caustic solution are separated. Spent air is vented to a burner in a nearby process heater while disulfide oil is decanted and injected into the charge to a hydrotreating unit. The regenerated caustic stream is returned to the extraction column. Merox catalyst is added periodically to maintain required activity.

MEROX EXTRACTION UNIT

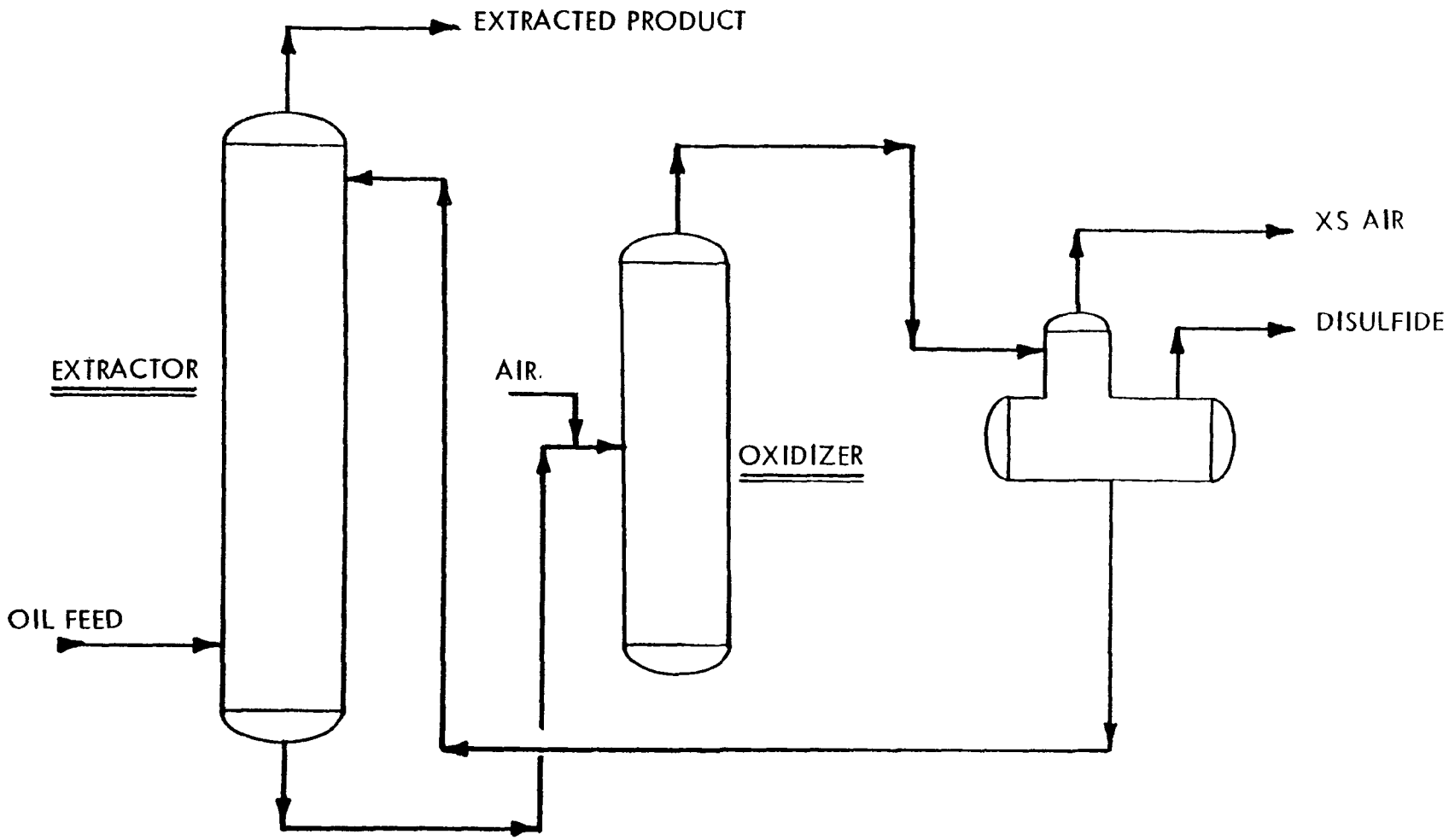

Specific Merox Applications

Saturate C3/C4 Merox

Mercaptans are removed from this stream to prepare the isobutane for use in the HF Alkylation plant and to prepare the propane for hydrogen plant feed.

Flexicoker C3/C4 Merox

This unit prepares feed for the catalytic condensaton unit.

Unsaturates C3/C4 Merox

This unit removes mercaptans from the C3/C4 stream prior to alternate dispositions of catalytic condensation, alkylation, or gasoline blending.

FCCU Gasoline Merox

This unit is slightly different from the other Merox unit in that the disulfides are not removed from the gasoline after they are formed from the contained mercaptans. This type of treating is referred to as Merox sweeting.

SOUR WATER STRIPPER

Introduction

A sour water stripper is used to remove H_2S, ammonia, and phenols from various process water streams produced in the plant.

Specifically these process water streams are from the following units:

- Hydrocracker
- Naphtha Hydrotreater
- FCCU
- LCO Hydrotreater
- Flexicoker
- Crude Distillation Unit

SOUR WATER STRIPPER

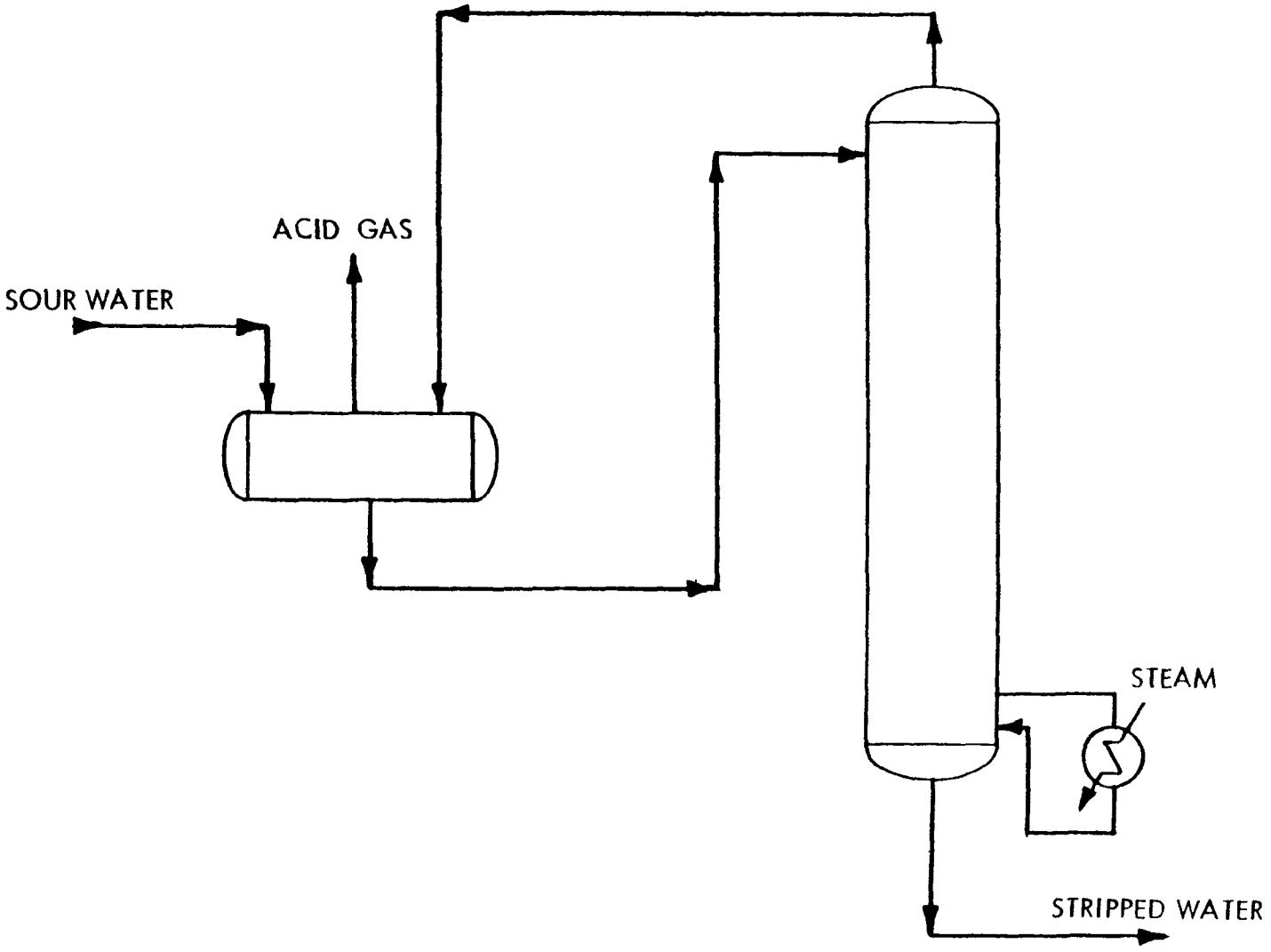

Process Flow

The operation consists of a simple stripping of the acid gas and ammonia. Sour water is fed as a single stream to a stripper with a steam scrubber. The overhead vapor is routed to the sulfur recovery unit. In this case the sour water stripper will be spared to provide reliability.

AMINE TREATING

Introduction

Amine treating of refinery gases removes hydrogen sulfide and other acid-gas constituents avoiding significant atmospheric pollution by SO_2 on combustion of the gases in fired heaters or boilers.

Process Flow

The process is based on an absorption-regeneration cycle using a circulating aqueous solution of an alkanolamine which reacts with acidic gases. Hydrogen sulfide containing feed is contacted countercurrently with amine solution in an absorption or extraction column. Regenerated solution is introduced into the top of the absorption column and leaves at the bottom of the column. Rich solution from the bottom of the extractor exchanges heat with regenerated solution and is fed to the regenerator column. Acid gases are stripped in the regenerator, which is equipped with a steam reboiler. Cooled regenerated solution is recycled to the absorber. Acid gases removed from solution in the regenerator are cooled, thus condensing the water, which is refluxed to the regenerator. These acid gases then flow to the sulfur recovery unit.

Specific Applications

Refinery Fuel Gas

Refinery fuel gas from the various process units is collected in a central system and then routed to a diethanolamine treating unit where sulfur is removed to a residual level of approximately 1 grain per 100 SCF.

C3/C4 Saturates

Propane and butane from the saturates gas plant are routed to an amine contactor for removal of hydrogen sulfide prior to Merox extraction for mercaptan removal.

AMINE TREATING UNIT

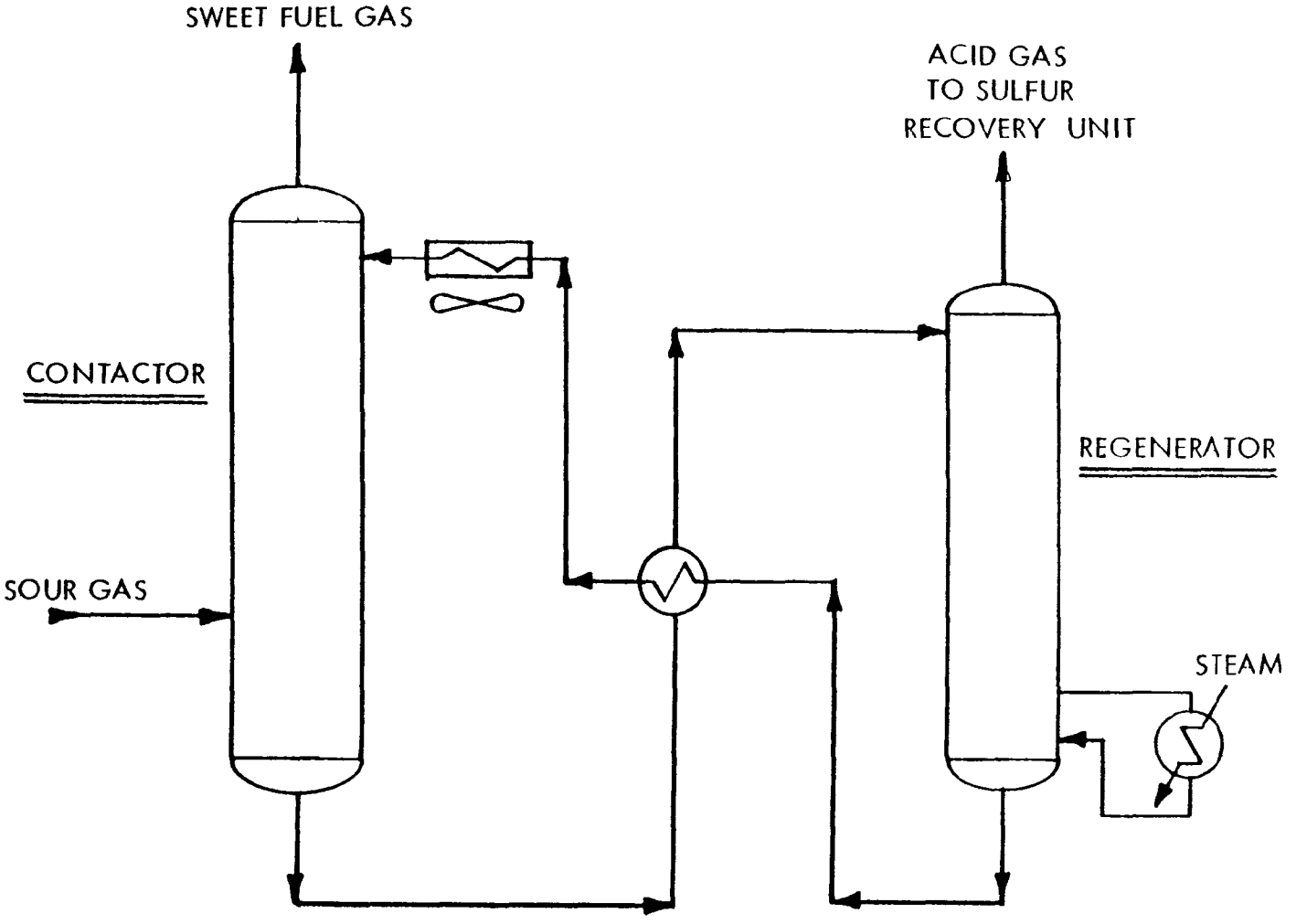

C3/C4 Unsaturates

This C3/C4 stream is also routed to an amine contactor prior to mercaptan extraction.

SULFUR RECOVERY UNIT

Introduction

The sulfur recovery unit is designed to recover at least 94 to 95 percent of the sulfur available as hydrogen sulfide in the acid gas stream from amine treating gas treating units and in a waste gas stream from a sour water stripper. To provide security and reliability for complete and continuous sulfur recovery, two sulfur plants will be provided, each having sufficient capacity to process all H_2S-containing gas streams.

Process Flow

A hydrogen sulfide, ammonia, nitrogen and water vapor mixture effluent from the sour water stripper (SWS) enters into a separator wherein free liquids are trapped and drained. An acid gas stream from the amine type gas purification unit flows into another separator wherein free liquids are trapped and drained.

The SWS gas and all of the process air (less process air required for reheat burners) is fed to the main process burner, a nozzle mixing, low pressure-drop burner which is mounted on the inlet to a refractory-lined "reactor furnace." The total supply of process air is so greatly in excess of the oxygen demand of the SWS gas that all of the H2S is burned to sulfur dioxide and all of the ammonia is burned to nitrogen and water vapor. This prevents "plugging" problems associated with the formation of ammonium sulfate, sulfamic acid, and other undesirable compounds of nitrogen, hydrogen, and sulfur. Process air for the reaction is furnished by two 50 percent duty multi-stage centrifugal blowers.

The acid gas (less acid gas required for reheat burners, and less any acid gas by-passed to the main process burner to maintain flame temperature) is fed into the "reactor furnace" at approximately the point of termination of the flame generated by the SWS gas.

The combustion product of the SWS gas and the acid gas flow through a restriction (or checkerwall) to enforce mixing of the gases. As the gases mix, the following reaction takes place:

$$H_2S + 1/2\ O_2 \rightarrow 1/2\ S_2 + H_2O$$

It is estimated that the above reaction goes to approximately 60 percent of completion in the firetube of the Waste Heat Boiler. Oxygen not consumed in the above (incomplete) reaction combusts a portion of the H_2S which does not enter into the above reaction, forming SO_2.

Partially reacted process gas is cooled to a temperature of approximately 1600°F by radiation and convection in the fire tube of the waste heat boiler. The partially reacted process gas then passes through flues in the waste heat boiler, wherein the following reactions are partially completed:

$$3S_2 \rightarrow S_6$$

$$4S_2 \rightarrow S_8$$

The net result of the reactions cited above is exothermic. Likewise, the combustion of NH3 and hydrocarbons (if any) in the feed gas is exothermic. A portion of the heat produced is removed in the waste heat boiler by generation of steam at pressures as high as 600 psig, and this steam is available for export and use as process heat in upstream or downstream processes.

The partially reacted process gases normally depart the boiler at a temperature of approximately 600°F. Under normal conditions, no sulfur is condensed in the boiler. At less than maximum rates of production, or under upset conditions, sulfur may be condensed in the boiler; therefore, the boiler is physically arranged so that any sulfur so condensed will be drained from the boiler at the point of minimum process gas temperature.

Process gases flow from the boiler to the first pass of the first sulfur condenser, an unfired steam generator, which has two isolated tube passes with a common shell-side pass. In the first pass of this condenser, the process gases are cooled to a temperature of approximately 320°F, while generating steam at a pressure of approximately 50 psig. Sulfur is condensed, and flows by gravity through a seal leg to the sulfur receiver.

Cooled process gases flow overhead to the first reheater (built into the end of the first stage of the catalytic reactor), wherein they are heated to a temperature of approximately 533°F by burning approximately 10 percent of the acid gas stream with sufficient air to maintain stable flame conditions. Products of combustion of the reheat gas are mixed with the process gas, and the mixed gases enter into the first catalytic reactor. In the first catalytic reactor the reaction takes place over an activated alumina catalyst.

Reacted process gases then flow through the tube side of a gas to gas heat exchanger, being cooled to a temperature of approximately 567°F while reheating process gases effluent from the third pass of the sulfur condenser to a temperature of approximately 380°F.

SULFUR RECOVERY UNIT

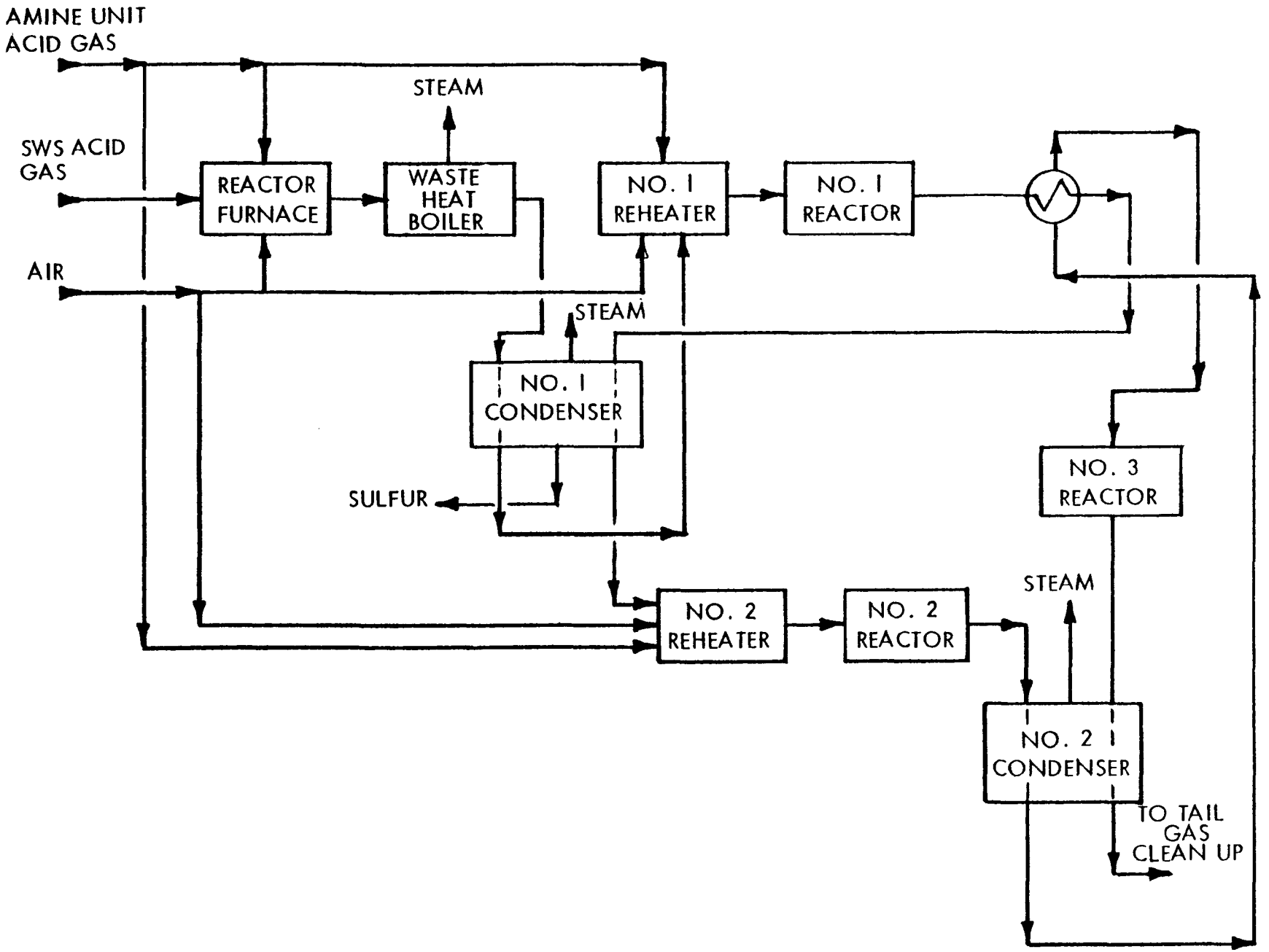

Process gas effluent from the tube side of the gas to gas heat exchanger enter into the second pass of the first sulfur condenser, wherein they are cooled to a temperature of approximately 320°F, while generating steam at 50 psig plus condensing sulfur, which flows through a seal leg to the sulfur receiver.

Process gas effluent from the second pass of the sulfur condenser flow to the second reheater, wherein they are reheated to a temperature of approximately 413°F by combustion of approximately 5 percent of the acid gas stream with sufficient air to maintain stable combustion. The mixed products of combustion from the second reheater and process gas flow downwards through an activated alumina catalyst in the second stage of the reactor.

Reacted process gas is cooled to approximately 320°F in the first pass of the second sulfur condenser (similar in design to the first), generating steam and condensing sulfur which drains to storage.

Process gas effluent from the first pass of the second sulfur condenser flows through the shell side of the gas to gas exchanger, being reheated to a temperature of approximately 380°F. Heater gas flows to the third stage of the catalytic reactor.

Reacted process gas effluent from the third stage of the catalytic reactor is cooled to a temperature of approximately 320°F in the second pass of the second sulfur condenser, condensing sulfur which drains to the receiver through a seal leg by gravity.

Cooled process gas effluent from the second pass of the second sulfur condenser passes into the coalescer, wherein the velocity of the gas stream is reduced so as to permit entrained sulfur to separate from the gas by gravity. Tail gas from the coalescer then flows to the tail gas treater.

Sulfur is periodically pumped from the receiver to remote storage or loading rack.

TAIL GAS TREATING UNIT

Introduction

The sulfur recovery unit will remove about 95 percent of the sulfur in the various acid gas streams. To further remove sulfurous emissions, tail gas cleanup facilities will be required. The Beavon/Stretford process is the likely choice for this application although others are available which are equivalent in terms of recovery efficiency. With this process the treated tail gas stream will contain less than 100 ppm of total sulfur compounds and less than 10 ppm of hydrogen sulfide.

Process Description

In the first portion of the process, all sulfur compounds in the Claus tail gas (SO_2, S_6, COS, CS_2) are converted to H_2S. The tail gas is heated to reaction temperature by mixing with the hot combustion products of fuel gas and air. This combustion may be carried out with a deficiency of air if the tail gas does not contain sufficient H_2 and CO to reduce all of the SO_2 and S_2 to H_2S. The heated gas mixture is then passed through a catalyst bed where all sulfur compounds are converted to H_2S by hydrogenation and hydrolysis. The hydrogenated gas stream is cooled by direct contact with a slightly alkaline buffer solution before entering the H_2S removal portion of the process.

The Stretford process is then used to remove H_2S from the hydrogenated tail gas. This process involves absorption of the H_2S in an oxidizing alkaline solution. The oxidizing agents in the solution convert the H_2S to elemental sulfur, then are regenerated by air oxidation which floats the sulfur off as a slurry. This sulfur slurry is then filtered, washed, and melted to recover the Stretford solution and produce a high purity sulfur product.

TAIL GAS CLEANUP FACILITIES

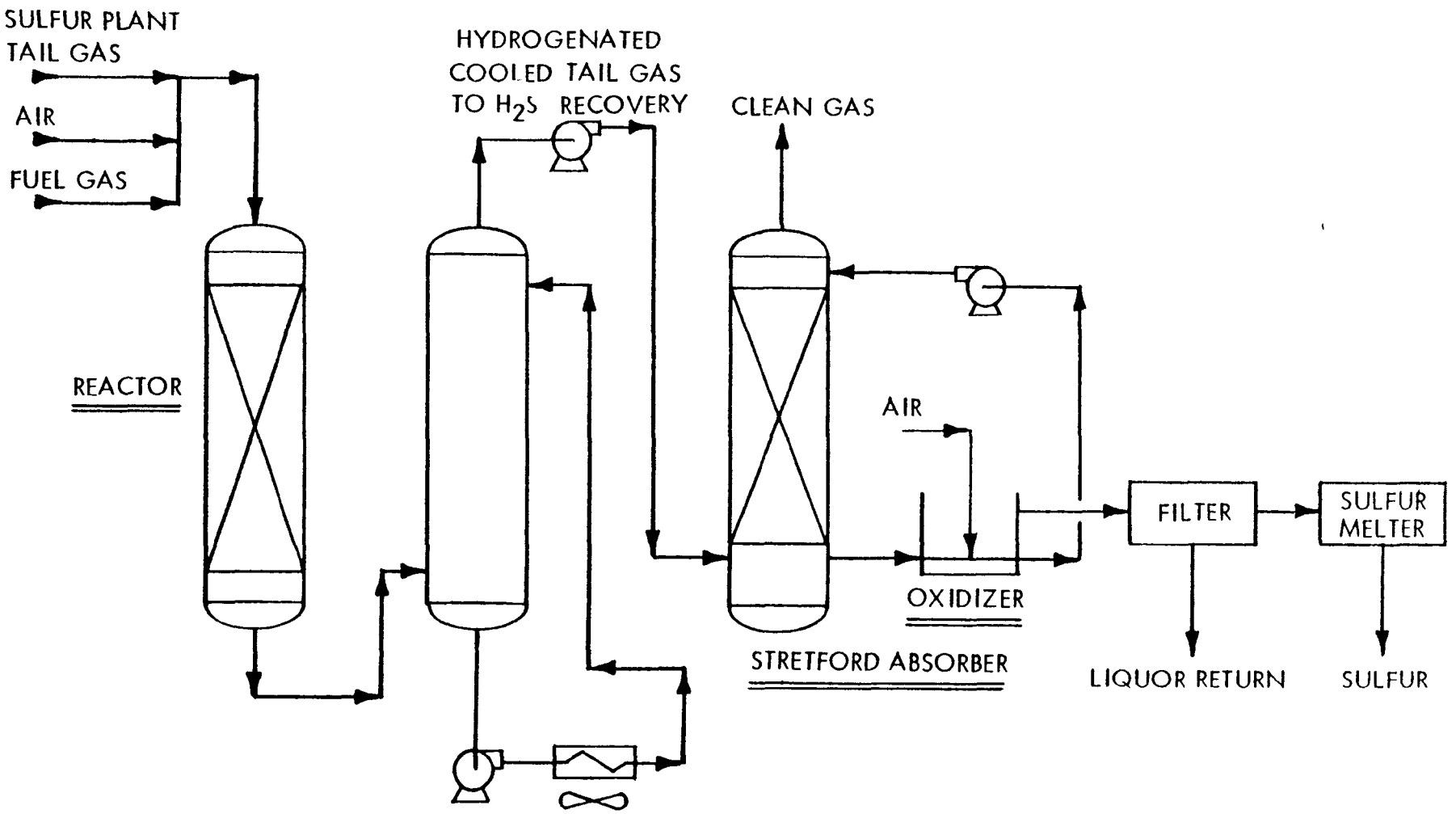

THE PACE COMPANY CONSULTANTS & ENGINEERS, INC. 5251 WESTHEIMER
P.O. BOX 53473 HOUSTON, TEXAS 77052 AC 713 965-0311 CABLE: PACECO-HOUSTON TELEX 77-4350

MATERIAL BALANCES

MATERIAL BALANCES

The basis for the material balance is the linear programming (L.P.) results prepared by UOP, Inc. We certify that the material balance is reasonable and will reflect actual plant operations to a reasonable degree of accuracy. Our basis for checking the reasonability of the material balance is as follows:

- Yields of products from the crude unit were checked based on independent assays of Alaskan North Slope crude.
- The L.P. results were checked for internal consistency.
- Process unit yields and utilities were checked with our data for similar units and also with several of our computer process models.
- The overall L.P. material balance was compared to the process design for each of the individual units.

The overall feed and product material balance is shown in Drawing 100. Drawing 101 shows the flow of acid gas throughout the plant. Sources of solid emissions and waste streams are shown on Drawing 103. Table 1 describes each of these waste streams and emissions. Finally Table 2 gives the caustic streams for disposal.

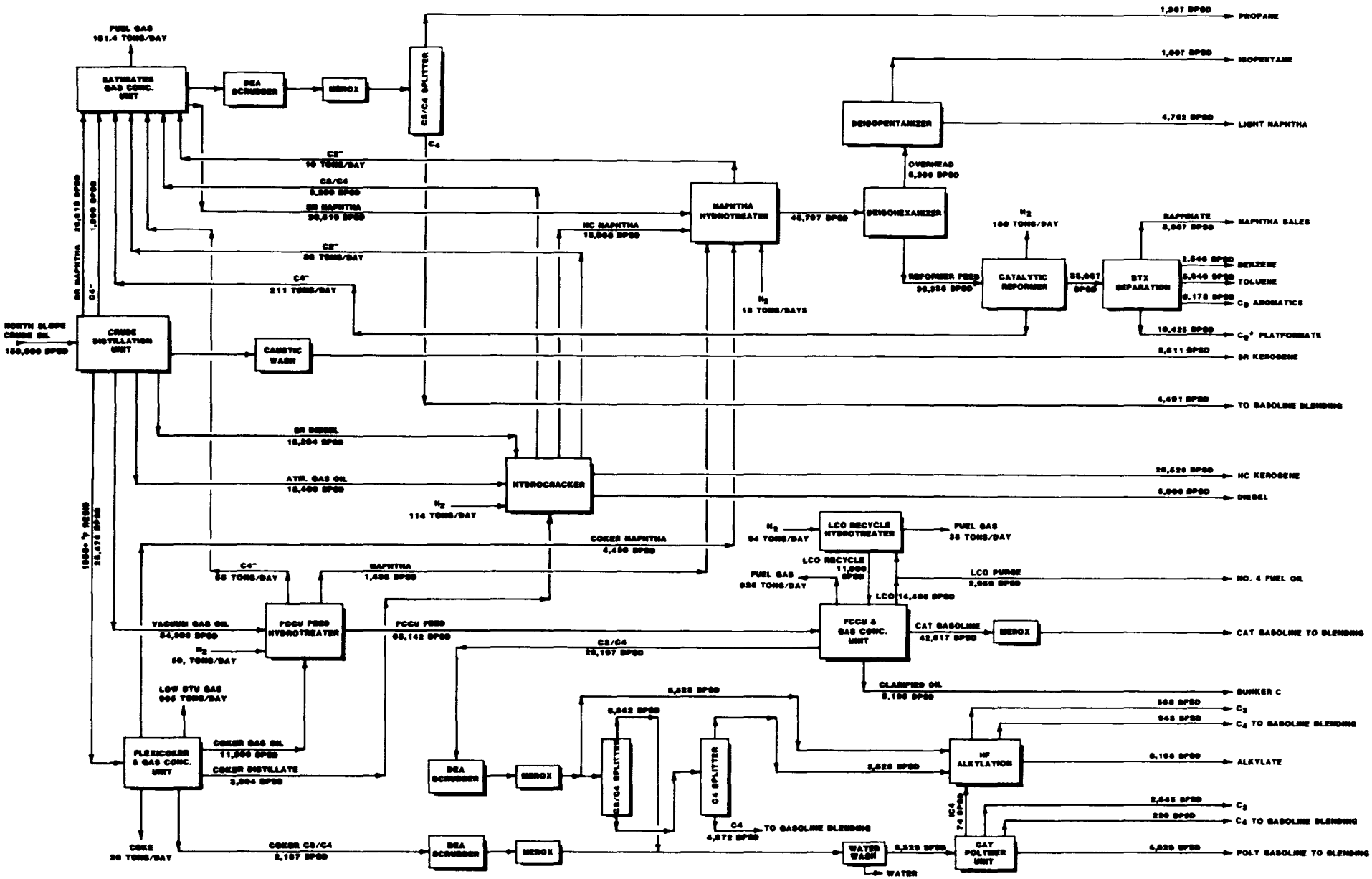

MATERIAL BALANCE DRAWING 100

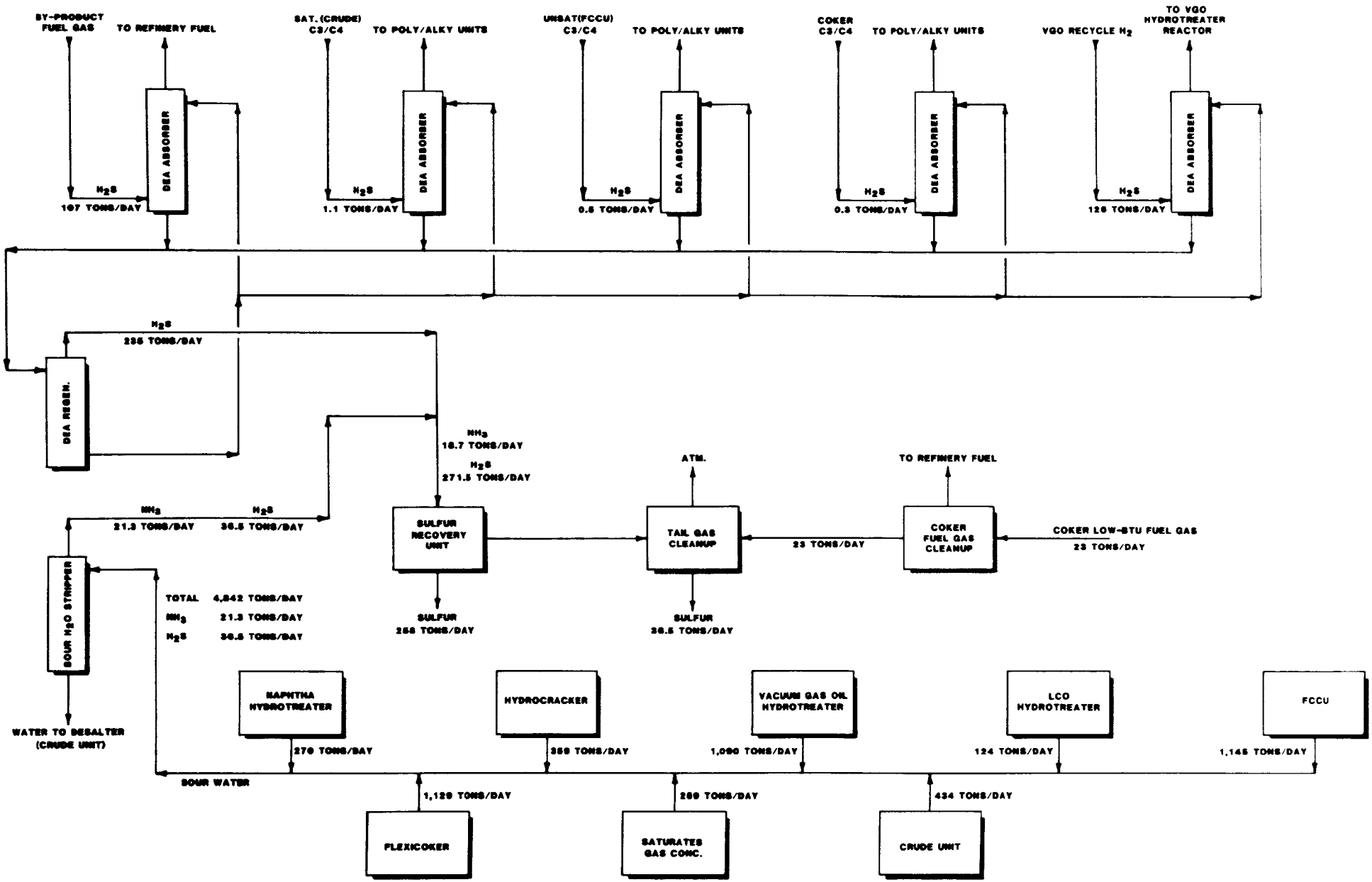

ACID GAS/SOUR WATER SYSTEM DRAWING 101

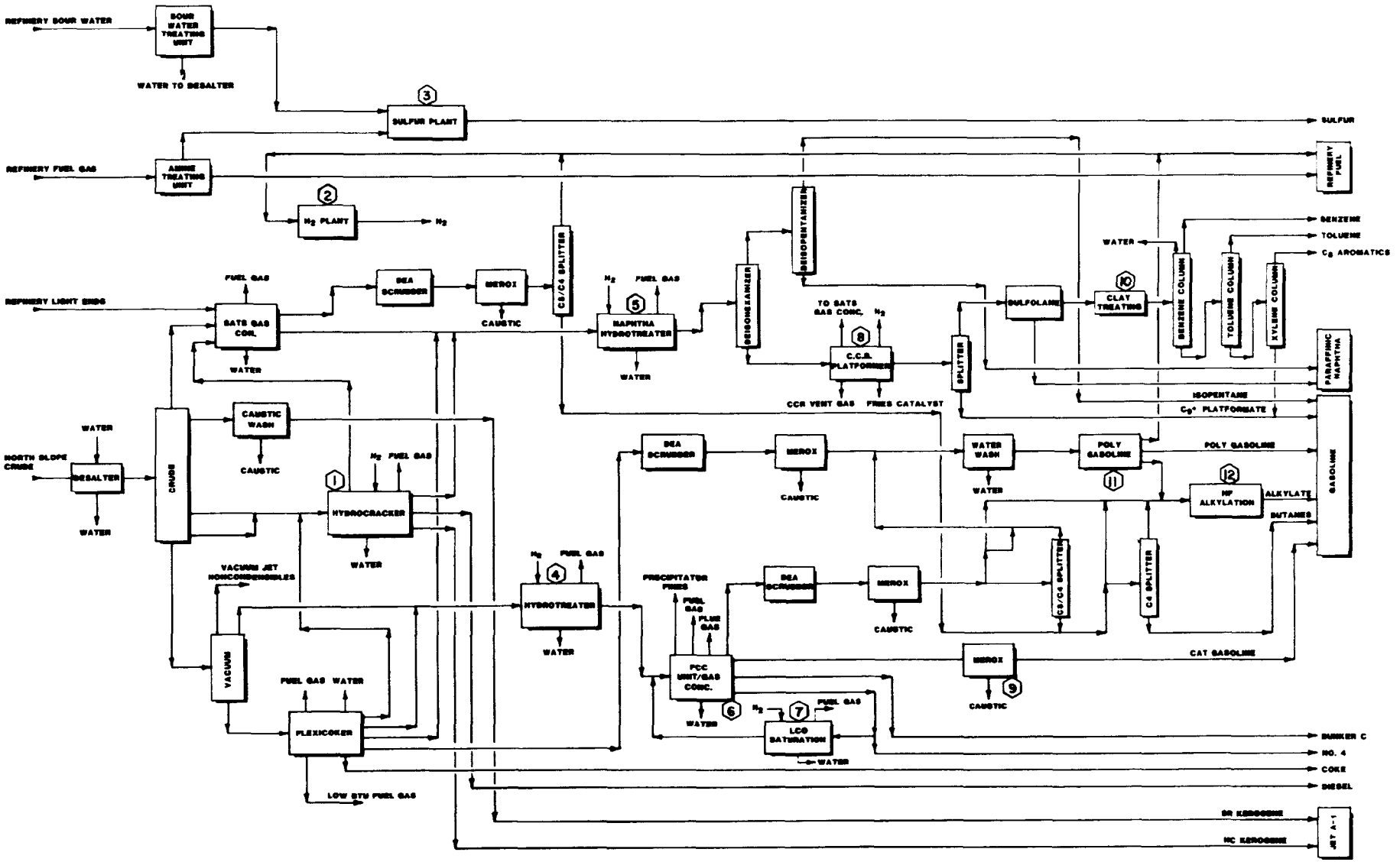

EMISSIONS AND WASTE STREAMS DRAWING 103

TABLE 1

SOLID EMISSIONS AND WASTES

	Quantity	Source	Composition	Disposal
1.	**Hydrocracker**			
	146,000 lbs. every 4 years	Unibon Reactor	Nickel-Moly metals on Silica Alumina base catalyst	Metals recovery
	109,000 lbs. every 4 years	Unibon Reactor	Nickel-Moly on Silica Alumina base catalyst	Metals recovery
2.	**Hydrogen Plant**			
	12,000 lbs. every 2 years	Feed Treatment Reactors	ZnO containing up to 25% ZnS	Toxic solid waste disposal
	45,000 lbs. every 3 years	Reforming Reactor	Medium % Nickel Catalyst	Metals recovery
	50,000 lbs. every 4 years	High temperature shift Reactor	Chromia promoted Iron catalyst	Toxic. Solid waste disposal
	75,000 lbs. every 2 years	Low temperature Shift Reactor	Zinc-Copper formulation catalyst	Solid waste disposal
	15,000 lbs. every 5 years	Methanator Reactor	High % Nickel Catalyst	Metals recovery
3.	**Sulfur Plant**			
	27,000 lbs. every 2 years	Reactors	Bauxite Catalyst	Solid waste disposal
4.	**FCCU Feed Hydrotreater**			
	570,000 lbs. every 4 years	Unibon Reactor	Cobalt-Moly metals on Alumina base catalyst	Metals recovery

Table 1 (continued)

	Quantity	Source	Composition	Disposal
5.	**Naphtha Hydrotreater**			
	70,000 lbs. every 3 years	Hydrotreater Reactors	Cobalt-Moly metals on alumina base catalyst	Metals recovery
6.	**Fluid Catalytic Cracking Unit**			
	390 lbs./hr.	Combination of 3rd stage cyclone and precipitator fines (continuous)	FCC Catalyst Fines containing Silica Alumina and possibly traces of rare earth metals	Could be disposed of in non-toxic solid waste disposal location
	40 lbs./hr.	Fines escaping to atmosphere from precipitator (continuous)	FCC Catalyst Fines containing Silica Alumina and possibly traces of rare earth metals	Atmosphere
	730 lbs./hr.	Equilibrium FCC Catalyst withdrawn to maintain activity	FCC Catalyst containing Silica Alumina and possibly traces of rare earth metals	Usually a market for this material - either to catalyst Mfg. or refineries operating with FCC Units
7.	**LCO Hydrotreater**			
	225,000 lbs. every 3 years	Hydrotreater Rx.	Catalyst	Metals recovery
8.	**Platforming Unit**			
	0.5 lbs./hr. (max.)	Vent gas from CCR section (continuous)	Catalyst fines containing Alumina and small amounts of Platinum and metal activator (0.375 Pt. and 0.3 activator)	Atmosphere

Table 1 (continued)

	Quantity	Source	Composition	Disposal
	3 lbs./hr. (max.)	Fines from elutriator sent to collection drums	Catalyst Fines	Metals recovery
9.	**Merox Unit**			
	50,000 lbs. every 5 years	FCC Gasoline Minalk Reactor	Carbon	Non-toxic solid disposal
10.	**Clay Treater**			
	300,000 lbs. every 2 years	BTX Clay Treater	A synthetic clay material made by Filtrol (as one example of a Mfg.) containing residual aromatics, and heavy polymer like material	Toxic disposal because of difficulty in stripping all aromatics off of spent clay, and nature of polymer
11.	**Polymer Gasoline Unit**			
	175,000 lbs. every 3 months	Catalytic Condensation Reactor	Phosphoric Acid on Kieselguhr base	Neutralize with $Na_2 CO_3$ and then dispose of as non-toxic waste or sell to fertilizer companies
12.	**HF Alkylation Unit**			
	21,000 lbs. per month	C3-C4 Alumina Treaters	Alumina containing up to 15% $Al F_3$	Paving gravel
	45,000 Lb. every 3 years	Feed Alumina Driers	Alumina containing some carbonaceous material	Paving gravel

Table 1 (continued)

Quantity	Source	Composition	Disposal
200,000 lbs. per year	Neutralization Pit	Primarily CaF_2 with some lime $Ca(OH)_2$	Considered toxic because of unreacted lime left in sludge. Toxic waste disposal facilities would have to be considered. If purity of CaF_2 is greater than 95-97%, then HF acid mgf. Co. will reclaim. However, normally purity is not this great and some sort of washing and filtering would be necessary. Best would be to seal in drums and send to a company that deals in toxic solid waste disposal, in proper and approved location, of course.

TABLE 2

SPENT CAUSTIC STREAMS

MEROX	SPENT CAUSTIC (LB/DAY) 5° Baume'	10° Baume'	20° Baume'
C_3/C_4 Saturate	-	2,630	1,875
C_3/C_4 Unsaturate	-	6,870	4,900
C_3/C_4 Flexicoker	-	770	550
FCC Gasoline	13,923	-	-

PROPERTIES OF SPENT CAUSTIC

5° Baume Solution -	pH	9-12
	Total Sulfur, wt ppm	300-3,000
	Total Nitrogen, we ppm	300-500
	Phenols, we ppm	1,000-20,000
	Mercaptide	5
	Some residual NaOH and $NaCO_3$	
10° Baume Solution -	Specific Gravity	1.017
	Sulfur (desulfide/Sulfite)	3.3 weight percent
	NaOH (free)	0 percent
	Iron Sulfides	Trace
	Merox Catalyst	Trace
	Disolved Oil	1 volume percent
	Caustic 50-70 percent spent	
20° Baume Solution -	Sulfur (desulfide)	200 weight percent
	Sulfur (mercaptide)	100 weight percent
	Thiosulfude	
	Thiosulfite	
	Thiosulfate	
	NAOH (free)	8-10 weight percent
	NaOH (combined)	4-6 weight percent
	Merox Catalyst	100-200 weight ppm
	Caustic no more than 30 percent spent	

THE PACE COMPANY CONSULTANTS & ENGINEERS, INC. 5251 WESTHEIMER
P.O. BOX 53473 HOUSTON, TEXAS 77052 AC 713 965-0311 CABLE: PACECO-HOUSTON TELEX 77-4350

INTERMITTENT PROCESS OPERATIONS

INTERMITTENT PROCESS OPERATIONS

INTRODUCTION

During certain intermittent operations some processes produce emissions which are not produced during normal operation. In general these intermittent modes are:

- Start-up
- Shutdown
- In situ Catalyst Regeneration
- Furnace Decoking
- Equipment Cleaning

The following sections describe the general procedures involved and the resulting emissions during typical unit intermittent operations.

GENERAL SHUTDOWN PROCEDURES

In general the shutdown of each unit is nearly the same. The basic steps are as follows:

1. Cut fire to process heaters.

2. Cut out charge.

3. Depressure to the closed flare system.

4. Drain liquids to feed or product storage or slop tanks.

5. Steam out to the flare system to free the unit of hydrocarbons.

To the extent that sulfur and/or nitrogen compounds are present in these units there will be emissions of sulfur dioxide and nitrous oxides as these materials are combusted by the flare.

CRUDE DISTILLATION UNIT

Start-up

The start-up of this unit is as follows:

1. Introduce oil to inventory pans.

2. Circulate oil throughout the system.

3. Apply heat to the crude oil feed.

The crude unit produces some wet gas which is handled by the saturates gas concentration unit, thus it is necessary to commence operation of the gas concentration unit before commissioning the crude unit. While it is theoretically possible to bring the unit on stream with no flaring of produced wet gas, some minor amount of flaring may be unavoidable.

Furnace Steam/Air Decoking

As the crude oil flows through the process furnace and is heated, some small amount of coking occurs on the interior of the furnace tubes. These coke deposits gradually accumulate and retard heat transfer resulting in excessive tube wall temperatures. As a result, it is necessary to remove this coke from the furnace tubes of both the atmospheric and vacuum heaters approximately every two years. This removal is effected by a procedure known as steam/air decoking.

Steam/air decoking refers to the cleaning of furnace tubes by the action of steam and air on the coke deposit. Coke is removed by three distinct processes:

1. Shrinking and cracking the coke loose by heating the tubes from the outside while steam flows through the tube.

2. Chemical reaction of hot coke and steam (coal gas reaction) producing CO, CO_2 and H_2.

3. Chemical reaction of coke with oxygen in air, producing CO and CO_2.

The mechanics of decoking are usually divided into two periods, "spalling" and "burning". During spalling, steam only is passed through the tubes at a fairly high rate while the furnace is fired. As much as 90 to 95 percent of coke can be removed with proper operation. The remaining coke is removed during the burning period when both air and steam are passed through the tubes.

Procedure

1. Preliminary

The tubes are steamed out through the normal furnace discharge lines for thorough purging of hydrocarbons. The furnace is then isolated from other process equipment by means of blinds; connected to the air-steam manifold; and all decoking lines and instruments installed.

Steam is introduced into all coils prior to lighting the burners. If the furnace is a combination oil and gas-fired type, gas only should be used since it allows better control and observation. Normally, the firing rate is hand controlled. Uniform heat distribution within the fire box is essential

in order to prevent "local" overheating of the tubes. The firing rate is gradually increased to bring fire box temperature up to 900–1000°F at a rate of about 300°F per hour.

2. Spalling

The furnace is brought up to 1,200–1,250°F and held at this temperature through the steam spalling period or until introduction of air. With low fire in the heater box, the color changes in the tubes are more readily detected. Simultaneous with the increase of firebox temperature, increase the steam rate until spalling begins and regulate for a maximum outlet of 1,000°F.

If spalling has not started by the time the maximum steam rate (18 lb/sec/sq.ft.) is reached, several methods may be used to promote spalling:

a. Alternately reducing and increasing steam quantity.

b. Lowering fire box temperature 100° - 200°F.

c. Adding small amounts of air for several minutes.

d. Reversing flow through the coil.

The extent of spalling is followed constantly by observing the color of the water quenching a sample of the effluent gas. When spalling begins the water turns from a milky color to gray to black and will contain fine particles of coke.

3. Burning

Prior to burning, the furnace temperatures are reduced 100° - 200°F and steam rate to approximately one-third (6 lb/sec/sq.ft.) of the maximum. Air is then added to the steam in slowly increasing amounts. The steam-air ratio is adjusted to burn coke at the maximum rate without overheating the tubes. The usual weight ratio of steam to air is about 10:1. Burning is best controlled by observing the tube metal temperature and appearance of the tube. A tube that is burning properly will have a cherry red (1300°F) hot spot, one to two feet long, which moves along the tube as burning progresses. When there is heavy coke laydown in the tube, the entire tube length may be cherry red. If temperature rises to bright red, air flow is decreased.

During burning, tubes are periodically flushed with full steam rate to blow out loose coke and ash. Toward the end of the burning period, the air rate is increased to clean out last traces of coke. The completion of burning is indicated by a drop in the CO_2 content of the effluent gas.

4. Cooling

When decoking is complete, air is shut off and firing rates decreased. Steam flow is maintained through the tubes as the furnace cools. Control of cooling rate, 200°F/Hr., (300°F maximum) is important especially when rolled-on headers are used. When the furnace is cool it is flushed with water before hydrostatic test.

UOP CONTINUOUS PLATFORMER

Start-up

The major steps in the start-up of this unit are as follows:

1. Evacuate the reactor system to remove oxygen. The system is tested for leaks at 20-25 in. mercury vacuum by observing the unit pressure after evacuation. If pressure rises there is air leakage into the system.

2. Purge and pressure to 5 psig using nitrogen.

3. Pressure to 50 psig with natural gas and test for leaks using a soap solution technique.

4. Circulate natural gas with recycle compressor for unit dry out.

5. Purge fractionation system with steam or nitrogen. Pressure test this system at 100 psig.

6. Purge hydrogen make-up compressor.

7. Establish levels and warm up the debutanizer.

8. Begin operations and achieve design conditions.

SULFOLANE UNIT

Start-up

1. Establish solvent loop circulation.

2. Bring in condensate and pump to the raffinate wash column.

3. Begin solvent circulation to the contactor.

4. Bring in reformate feed.

3. Begin solvent circulation to the contactor.

4. Bring in reformate feed.

GAS CONCENTRATION UNITS

Start-up

The gas concentration units should result in no emissions during intermittent operations. The basic start-up procedure is to:

1. Bring in gasoline from storage.

2. Circulate throughout the unit.

3. Begin heating with reboilers.

4. Bring in vapor feed and liquid and line out at design conditions.

FLUID CATALYTIC CRACKING UNIT (FCCU)

Start-up

The general procedure is as follows:

1. Heat regenerator vessel using start-up air heater.

2. Purge main fractionator with nitrogen.

3. Introduce oil to the main fractionator and circulate. Bring in fluid catalyst to the regenerator.

4. Add torch oil to the regenerator to increase temperature.

5. Begin catalyst circulation between the reactor and regenerator.

6. Cut oil to the reactor and bring to design conditions.

ALKYLATION UNIT

Start-up

The major steps for start-up are as follows:

1. Remove oxygen from the unit with a nitrogen purge.

2. Establish as closely as possible hydrocarbon circulation at design conditions but without olefins.

GAS CONCENTRATION UNITS

Start-up

The gas concentration units should result in no emissions during intermittent operations. The basic start-up procedure is to:

1. Bring in gasoline from storage.
2. Circulate throughout the unit.
3. Begin heating with reboilers.
4. Bring in vapor feed and liquid and line out at design conditions.

FLUID CATALYTIC CRACKING UNIT (FCCU)

Start-up

The general procedure is as follows:

1. Heat regenerator vessel using start-up air heater.
2. Purge main fractionator with nitrogen.
3. Introduce oil to the main fractionator and circulate. Bring in fluid catalyst to the regenerator.
4. Add torch oil to the regenerator to increase temperature.
5. Begin catalyst circulation between the reactor and regenerator.
6. Cut oil to the reactor and bring to design conditions.

ALKYLATION UNIT

Start-up

The major steps for start-up are as follows:

1. Remove oxygen from the unit with a nitrogen purge.
2. Establish as closely as possible hydrocarbon circulation at design conditions but without olefins.
3. Reduce the water content of the hydrocarbon circulating stream to 50 ppm water by drawing water from the unit and by circulating through the feed dryers.

4. Establish acid circulation.

5. Introduce olefin feed.

The plant is carefully inspected for leaks upon introduction of the acid. If possible, repairs are made on stream. If not, the unit is shut down for repairs.

GASOLINE POLYMERIZATION UNIT

Start-up

1. Inventory the unit with saturates (propane and butane).

2. Circulate oil.

3. Introduce olefin feed.

Catalyst Dumping

A steam decompression method has been developed to allow catalyst (phosphoric acid) dumping with no acid run off. Basically, superheated steam is used to dislodge the spent catalyst from the reactor vessels. The dry catalyst is then collected in drums. This spent catalyst may be sold to a fertilizer company.

HYDROCRACKER/HYDROTREATER

Start-up

The basic steps in starting these units are similar and consist of the following:

1. Evacuate.

2. Nitrogen purge for oxygen removal.

3. Circulate nitrogen with recycle compressor.

4. Circulate oil.

5. Bring reactor inlet temperature to 300°F.

6. Bring in hydrogen.

7. Increase reactor temperature to normal operating level.

After shutdown of the unit a wash with caustic soda is required before opening the vessel. About 75,000 gallons of caustic soda solution are used and must be routed to the process water system. This wash is necessary to prevent formation of polythionic acid which is extremely corrosive.

In Situ Catalyst Regeneration

Catalysts lose their activity due to the accumulation of coke, sulfur, and metals as a part of the normal operation of the unit. Some catalysts can be regenerated in place several times while others must be replaced once the initial activity is lost. At ALPETCO, the only catalysts that may be regenerated in place are hydrotreating and hydrocracking catalysts. On the average, these catalysts require regeneration at approximately six month intervals. The following deposits on the catalyst are typical:

	Weight Percent on Catalyst
Sulfur	4 - 7
Carbon	5 - 25
Hydrogen	0.4 - 1.8

The catalyst is regenerated by burning the deposits from the catalyst yielding sulfur oxides, carbon dioxide and water. This burn is accomplished by using the recycle compressor to circulate a steam of nitrogen. A small quantity of air is injected to provide oxygen for the combustion. The products of combustion are vented to the atmosphere. Total sulfur emissions during a simple regeneration will be about six tons (or about 2.7 percent of the total annual SO_2 emissions from the refinery); however, this quantity varies with each specific regeneration. The overall regeneration procedure is completed in about four days.

AMINE UNITS

Start-up

Start-up of these units is as follows:

1. Begin amine circulation.
2. Introduce heat to the regenerator reboiler.
3. Begin acid gas feed.

This unit would be brought into operation before all refinery units, so that there will be no H_2S emissions as the hydrogen sulfide producing units come on stream.

Prior to start-up the unit is washed with caustic soda to remove trace quantities of grease and oil which may be present in the closed vessels. This is necessary to prevent foaming. The wash water is routed to the process water sewers.

MEROX UNIT

Start-up

The steps for start-up of this unit are as follows:

1. Bring in oil.
2. Inventory the caustic/hydrocarbon contactor with caustic.
3. Begin caustic circulation from the regeneration section.
4. Start oxidizing air to the unit.

Fixed Bed Unit Wash

The FCCU gasoline unit which is a fixed bed sweetener requires a contactor water wash each four to six months. This water is routed to the sour water stripper system. The total water used for each wash is about 20,840 gallons. Effluent properties, expressed as parts of contaminant per million parts of total solution, by weight (Wt PPM), are as follows:

	pH 9-10
Insolubles	20 wt PPM
Total Sulfur	300 wt PPM
Total Nitrogen	15 wt PPM
Phenols	500 wt PPM

Sand Filters

Sand filters are used to remove trace amounts of caustic entrained overhead of the caustic/hydrocarbon contactor. Periodically these sand filters must be back washed with water as pressure drop across the bed increases. This back wash which contains trace amounts of caustic is routed to the process water sewer.

FLEXICOKER

The Flexicoker start-up sequence is as follows:

1. Start air blower.

2. Start heat up with auxiliary burner burning clean gas.

3. Fill oil circuits in fractionation section.

4. When the refractory is hot and dry, start loading coke into unit and establish circulation between heater and reactor.

5. Establish coke ignition in heater. Caustic treat heater overhead gas in Venturi scrubber to maintain neutral pH.

6. Cut feed to reactor.

7. Transfer hot coke to gasifier and start gasification operation.

8. Bring unit up to desired feed rate.

HYDROGEN PLANT

PREPARATION FOR INITIAL START–UP

Gas Production and Purification

1. **Activated Carbon Drums**

   The desulfurization catalyst should be charged to the activated carbon drums in accordance with the manufacturer's instructions.

2. **Reformer**

   The initial charging of catalyst into the tubes of the primary reformer should be carried out in accordance with the catalyst manufacturer's instructions.

   The reforming catalyst should be in the form of rings. The catalyst is moderately rugged but should not be subjected to abuse such as overheating (about 1,850 F), rapid changes in temperature, contact with hot water in the liquid phase, and contamination with impurities. Any catalyst stored in containers should be protected from the weather. After the catalyst has been charged to the reformer tubes, the tube flange covers should be replaced and a pressure test for leaks should be made using inert gas and soapy water.

3. **CO Converter**

   The design of the plant requires two types of CO conversion: one bed of high temperature catalyst and one bed of low temperature catalyst. Both beds of CO shift converter catalyst should be loaded according to the manufacturer's instructions. Once the conversion catalyst has been put into service, it should not be allowed to come in contact with uncontrolled amounts of air or other oxygen–containing gases. Contacting the catalyst with liquid water or saturated steam should be avoided at all times. The iron in the conversion catalyst will react with carbon monoxide at reduced temperatures to form the toxic compound iron pentacarbonyl.

4. **Methanator**

   The procedure for loading the methanation catalyst is essentially the same as for charging the CO converters and should be carried out according to the manufacturer's recommendations.

   Under no circumstances should this catalyst be wetted, and once it has been put in service, it should not be allowed to come in contact with air, nor should it ever be subjected to a gas stream containing hydrogen sulfide.

A combined carbon oxide ($CO + CO_2$) or oxygen concentrations in excess of two percent for longer than a few moments will result in permanent damage because of the high temperature which will result.

If the methanator is to be opened or the catalyst removed during a shutdown, the catalyst should first be oxidized before taking the vessel out of service. At temperatures below 250°F, the nickel in the methanation catalyst will react with carbon monoxide to form the highly toxic and carcinogenic compound nickel carbonyl.

5. **CO_2 Absorber**

To prepare the CO_2 absorber for operation, it should first be inspected to insure that the packing support has been properly installed. The packing should then be loaded into the absorber by floating it in, having filled the absorber with water.

After the packing has been installed, the distributor should be inspected to insure that it will give even distribution of MEA over the packing.

6. **Amine Reactivator***

The amine reactivator is prepared for operation in the same manner as the CO_2 absorber.

7. **Amine System***

Before initial operation of the amine system, the entire system should be thoroughly washed with clear water. This washing can be accomplished by circulating clear water between the CO_2 absorber and the amine reactivator, using both the normal amine pump and the spare pump. When this water is clean, the unit should be flushed with an 0.5 percent MEA solution and circulated for several hours at about 1,500° F. At the end of this time, the system should be drained and flushed with clear water. After the flush, the system should be filled with condensate and circulated. While circulating, fresh MEA should be added to the system in a sufficient quantity to make a 20 percent MEA solution. As soon as the MEA solution has been established and thoroughly mixed, the amine system should be shut down until all the air in the system can be replaced with purge nitrogen. Prolonged contact of MEA with air or other oxygen-bearing gases causes a gradual degradation of the MEA solution.

Note: Carbonate is often utilized instead of MEA in this service with similar results.

8. **Purging**

After the plant has been thoroughly inspected and made ready to start up, it should be purged with an inert gas until there is less than one percent oxygen in the system. As a safety measure, the entire plant must be shut down before purging is started.

It is not necessary to purge the activated carbon drums with nitrogen as they will be purged with steam when regenerated for the first time, with the steam being displaced by natural gas at the end of the regeneration cycle.

Inert gas should be introduced to the unit downstream of the activated carbon drums and should be directed to flow through the primary reformer, the CO converter, the tubes in the MEA reboiler, the condensate accumulator, the converted gas cooler, condensate separator, CO_2 absorber, the methanator, heat exchanger, the gas cooler, and then to the compressor knock-out drum. From the compressor knock-out drum, the inert gas will flow to the compressors. While purging the CO2 absorber, the amine solution should be circulated through the vessel to insure that all air pockets have been removed from the piping and oxygen displaced from the system.

Initial Start-Up Procedure

After the reformer firebox refractory has been properly dried, steam flow is started through the steam superheater section and vented to the atmosphere upstream of the reformer tubes. Once the steam has reached the proper degree of superheat so that it is dry and colorless, it can be introduced into the tubes of the reformer. This steam flow should be started when the furnace wall temperature reaches approximately 1,000° F. As the temperature of the superheated steam entering the tubes rises, the flow can gradually be increased. When the temperature at the inlet to the top of the shift converter reaches 700° F, the waste heat boiler should be adjusted in order to maintain this temperature. Prior to the actual production of hydrogen-rich gas in the reformer, furnace temperatures should be monitored very closely as the amount of heat required to merely heat the steam is small compared to that required to supply the heater reaction once reforming has started. At this point, the furnace should be heated to a uniform tube temperature of about 1,600° F, top to bottom.

Reduction of the CO Conversion Catalyst

The shift conversion catalyst as manufactured is in the oxidized state and contains sulfur. Therefore, it must be reduced and desulfurized during the initial start-up. This reduction process is exothermic and will result in temperatures as high as 900 to 1,000° F, unless the start-up is carefully controlled. Temperatures in this range will severely deactivate the catalyst. It is important that the high temperature shift converter catalyst be reduced and

have the sulfur removed prior to attempting to reduce the low temperature shift converter catalyst. Since hydrogen sulfide and other sulfur-bearing gases are poisons to the catalyst, reduction of both of these catalysts shall be conducted under the direction of the catalyst manufacturer, because the manner in which the catalyst is treated from the very beginning as a significant effect on the life of the catalyst.

During the reduction of the high temperature shift catalyst, some H2S will be vented to the atmosphere until all of the sulfur has been removed from the catalyst. After completion of the above preliminary steps, the plant may be started up in a normal manner, being careful to check the tube temperatures so that firing may be adjusted to achieve uniformity during the start-up period.

SULFUR RECOVERY UNIT

Start-Up

1. Slowly warm the furnace to avoid refractory damage. Inert gas or steam should be used to moderate flame temperatures.

2. Raise inert temperatures to catalyst beds to 400°F and outlets to 300°F.

3. Bring H_2S into the plant.

4. Adjust air to achieve the stoichimetric Hydrogen Sulfide/Sulfur Dioxide ratio.

THE PACE COMPANY CONSULTANTS & ENGINEERS, INC. 5251 WESTHEIMER
P.O. BOX 53473 HOUSTON, TEXAS 77052 AC 713 965-0311 CABLE: PACECO-HOUSTON TELEX 77-4350

WASTEWATER

WASTEWATER

WASTEWATER TREATMENT

The proposed refinery will produce several different types of wastewater. The treatment requirements for each type or category of wastewater vary considerably. The basic treatment concept for refinery aqueous wastes is to segregate various types of streams, provide the appropriate treatment for each type of water, and then combine the treated streams into a single outfall. Wastewater from the refinery will fall into one of the following categories:

- Clean Storm Runoff
- Contaminated Storm Runoff
- Non-organic Waste Streams
- Ballast Water
- High Oil Waste Streams
- Low Oil Waste Streams
- Sanitary Wastes

RAW WASTE LOAD

Clean Storm Runoff - Runoff from the tank farms and other non-process areas will be acceptable for direct discharge without treatment except when a spill occurs. Spills will be contained within the diked areas surrounding each tank. After a period of rainfall, the water contained within the tank farm dikes will be tested prior to discharge. Treatment can be provided if the water does not meet the effluent standard.

Contaminated Storm Runoff - The wastewater treatment system is being designed on the basis that runoff from the process area (27.3 acres) will require treatment. A storm surge pond will be required to retain the peak runoff while releasing water to the treatment system at a constant rate. The storm surge pond will be sized to handle runoff from a ten year, ten day storm. With continuous pumping during the storm to the treatment system, the pond would be completely drained at the end of the tenth day. The expected quality of the settled storm water is as follows:

Flow	600 gpm
Biochemical Oxygen Demand	200 ppm
Chemical Oxygen Demand	500 ppm
Oil and Grease	50 ppm
Total Suspended Solids	40 ppm

Non-organic Waste Streams - Several waste streams generated in the refinery are very low in organic contaminants. They do, however, require some treatment prior to discharge. The wastes falling into this category include: hydrogen plant wastewater, demineralized regenerant, and boiler blowdown.

Wastewater from the hydrogen plant will be relatively clean. This 132 gpm stream will have a BOD less than 10 ppm and COD less than 20 ppm. Treatment in the biotreatment plant can only increase these concentrations and result in less effective treatment of the plant wastes.

Boiler feed water and some process water will be treated for plant use in a demineralizer consisting of both a weak acid ion exchanger and a mixed bed ion exchanger. Sulfuric acid and caustic will be used to regenerate the depleted resin beds. The spent acid and caustic solutions are then discharged to the treatment system. The second waste stream from the plant utility system is boiler blowdown. The flows and characteristics of the two streams are estimated to be:

	Boiler Blowdown	Demineralizer Regenerant
Flow (gpm)	45.0	70
COD (ppm)	201.0	NA
BOD (ppm)	61.0	NA
Phenol (ppm)	0.1	NA
Oil & Grease (ppm)	14.0	NA
NH_3 (ppm)	3.0	NA
TDS (ppm)	2,500.0	4,000
TSS (ppm)	40.0	NA
pH	9-12	1-13

NA = Not Available

Due to the phosphorus content the boiler blowdown will be treated in the biological treatment plant. The deionizer regenerant, however, can be neutralized and directed to the outfall.

Ballast Water - Ballast is taken aboard an empty tanker during its departure from port and may vary from an average of 1.5 barrels per deadweight ton displacement to somewhat over 2 barrels during rough weather. The ballast initially has the characteristics of the body of water from which it was taken; however, when loaded it is contaminated with the remains of the previous cargo in the product hold. The degree of ballast contamination is dependent upon the nature of the previous cargo and the cleanliness of the tanker's holds. The portion of this ballast unloaded at port depends upon the amount remaining after discharges of a portion of the ballast at sea. Since water pollution enforcement affects the amount of ballast discharged at sea, ballast unloaded at port can be expected to increase as pollution enforcement (worldwide) becomes more stringent.

Ballast handling procedures at sea vary considerably with foreign tankers having the minimum pollution control discipline. The practice of washing ballast tanks at sea or consolidating dirty ballast into a single tank for discharge continues even though international pressure has been applied to eliminate all ballast discharges at sea. The estimated ballast load at the refinery is equivalent to 3.0 barrels per deadweight ton displacement. The system, therefore, will be capable of treating the full ballast load from a tanker moving in very rough seas.

Recognizing the variability of ballast handling procedures at sea, the impact of previous cargo, and the origin of the water, the characteristics of untreated ballast water will fluctuate widely. Therefore, the characteristics of ballast water can only be estimated on an average basis. The estimated flow and constituents are as follows:

Flow	1,530 gpm
COD	420 ppm
BOD	155 ppm
Phenol	30 ppm
Oil & Grease	50 ppm
TSS	85 ppm
TDS	23,860 ppm

The estimated concentration of phenol in the ballast water is very conservative in that the concentration is considerably greater than is experienced at most Gulf Coast refineries.

High Oil Waste Streams - At least four key waste streams in the refinery contain or have the potential to contain high concentrations of oil. These streams are from the desalter and the olefin poly plant, spent sulfide caustic, and the plant oily water.

Desalters are used in petroleum refineries primarily to remove inorganic salts from incoming crude oil. The inorganic salts are present in the crude oil as an emulsified aqueous solution of salt. The reasons for desalting crude oils are:

- To avoid plugging and fouling of process equipment by salt deposition.
- To reduce corrosion caused by the formation of hydrogen chloride from the chloride salts during processing of the crude oil.

The wastewater stream from a desalter contains emulsified and occasionally free oil, ammonia, phenol, sulfide, and suspended solids. The wastewater is characterized by high biochemical oxygen demand, chemical oxygen demand, total dissolved solids, and high temperature. Since the desalter operates on a level control principle, occasional system malfunctions can discharge very high

oil concentrations to the sewer. Feed water to the desalter is obtained from the sour water stripper. The estimated flow and characteristics of the steam stripped desalter effluent are as follows:

Flow	235 gpm
COD	470 ppm
BOD	300 ppm
Phenol	20 ppm
Oil & Grease	750 ppm
Sulfide	26 ppm
Ammonia	130 ppm
TDS	5,000 ppm
TSS	1,600 ppm

The olefin poly plant produces a high quality gasoline component by dimerization and trimerization of C_3 and C_4 mono-olefins over a phosphoric acid catalyst. Water is added continuously to the feed to hydrolyze the catalyst. The wastewater from the olefin poly plant may be contaminated with phosphoric acid (100 ppm) and my contain oil (500 ppm). Wastewater flow is estimated to be 14-15 gpm.

Approximately 50 gpm of "oily water" will be generated from the tankage, machine shop, and plant washdown area. The stream will contain approximately 1,000 ppm of oil. Another source of wastewater to the oily water system is the steam condensate from the vacuum distillation unit. The flow of vacuum jet condensate is about 64 gpm and it contains oil and cracked hydrocarbons.

The major source of sulfide caustic are the caustics and water washes in the hydrocarbon, which feeds to the alkylation unit (515) and the olefin poly plant. Sulfur compounds must be limited to low levels to satisfy product sulfur content specifications and to improve the octane rating in product gasolines. Aqueous solutions of sodium hydroxide (NaOH), commonly referred to as caustic, are used to remove the acidic sulfur compounds. The resulting 0.5 gpm of spent caustic has a very high sodium sulfide and sodium mercaptide content.

Low Oil Waste Streams - Although contaminated with organics, wastewater from the bottom of the sour water stripper, the tail gas cleanup, and the HF alkylation contain very low concentrations of oil compared to oily waste streams.

Sour water originates in several process operations in the refinery. Many of the processes use steam as a stripping medium in distillation and as a diluent to reduce the hydrocarbon partial pressure in catalytic or thermal cracking. The steam is eventually condensed as an aqueous effluent commonly referred to as "sour or foul water." Condensation of the steam usually occurs simultaneously with the condensation of hydrocarbon liquids and in the presence of a hydrocarbon vapor phase containing hydrogen sulfide. Thus, the condensed steam will usually contain hydrogen sulfide which imparts an unpleasant odor and hence the name "sour water." The estimated sour water flows from the various contributing process units are as follows:

Crude and Vacuum Distillation	72 gpm
Flexicoker	187 gpm
Naphtha HDS	45 gpm
Hydrocracker	60 gpm
Heavy Gas Oil HDS	181 gpm
Cycle Oil HDS	21 gpm
Catalytic Cracker and Unsaturated Gas Plant	138 gpm
TOTAL	804 gpm

A portion of the stripper bottoms is used as makeup to the desalter unit. The remainder is sent to the waste treatment facility. The stripper bottom flow to the wastewater treatment plant and its expected characteristics are as follows:

Flow	569 gpm
Phenol	20 ppm
Oil & Grease	2 ppm
Sulfide	26 ppm
NH_3-N	20-130 ppm

Approximately 10 gpm of solution will be purged from the Stretford tail gas cleanup system. The Stretford process treats various gas streams for sulfur removal. The wastewater is estimated to contain the following constituents:

Sodium Carbonate	20,500 ppm
Anthraquinone Disulfonate	2,200 ppm
Sodium Vanadate	6,200 ppm
Sodium Thiosulfate	172,000 ppm
Sodium Sulfate	103,000 ppm
Rochelle Salt*	845 ppm

*$KNaC_4H_4O_6$-$4H_2O$

Alkylation plant spent caustic comes from washing products to remove trace amounts of hydrofluoric acid and from the neutralization of hydrofluoric acid leaks and spills. All fluoride bearing caustic is lime treated in the alkylation unit neutralization pit where all fluoride is removed as insoluble calcium fluoride sludge. The total flow from this area is estimated to be 2 gpm.

PROPOSED TREATMENT SYSTEM

A schematic diagram of the proposed wastewater treatment system is given in Figure WWT-1. Table WWT-1 is the estimated raw waste load and treatment plant performance.

Discharge 1, uncontaminated storm water, is routed directly to the common outfall and will be monitored during storm conditions to ensure effluent quality.

The wastewater produced by regenerating the water plant demineralizers contains the same quantities of organic material found in the water supply. The pH of the stream will vary from highly acidic to highly basic depending on the phase of the regeneration cycle. The regenerant wastewater streams are routed to an equalization tank where adequate retention time (24 hours) allows for partial self–neutralization of the stream. Following equalization, the stream enters a neutralization tank where pH is controlled to a range of 6 to 9 before discharge.

Wastewater from the hydrogen plant is essentially free of organic contamination. Therefore, this stream is directed to the regenerate equalization tank rather than biological treatment. The buffering capacity of the stream also assists in neutralizing the acid streams.

Ballast water characteristics can vary significantly depending on several previously discussed factors. The proposed system will provide treatment within the normally anticipated range of characteristics. Since ships are deballast at very high flow rates, the water will be pumped to a receiving tank. The receiving tank will be steam traced to allow for rapid oil/water separation. Water in the receiving tank is pumped at constant rate to the primary oil separator, which is a corrugate plate interceptor (CPI).

The plate separator operates on the principle of reducing the distance oil must travel before reaching the collecting surface. The oil particles coalesce on the underside of the plates and creep up to the surface of the water. The distance an oil drop travels before being trapped is only a few inches versus a few feet in the API separator. The plate separator is sensitive to flow and oil concentration changes. Therefore, the upstream ballast receiving tank is essential to ensure maximum treatment efficiency.

Following gross oil and solids removal, alum and polymer are added to further coagulate oil and solids. These residual materials are removed in a dissolved air flotation unit.

The primary treatment methods used for ballast water treatment are designed to remove free and emulsified oil plus suspended solids. The chemical oxygen demand (COD) and biochemical oxygen demand (BOD) of the wastewater will be reduced by a rotating of biological contractor. The system is identical to that used for process wastewater described in detail later. Effluent suspended solids generated by biological treatment are removed by a clarifier. Final polishing using a pressure filter will ensure maximum effluent quality.

A process option existed to either treat ballast water separately or in combination with process water. International agreements and Coast Guard regulations are leading to a future requirement that all ballast be clean and segregated. When this occurs the biotreatment of ballast will be unnecessary. Therefore, the two biotreatment systems were segregated so that ballast could

be phased out without upsetting process wastewater treatment. Identical systems were used for each wastewater so that treatment units could be switched to different service if required.

After best available demonstrated treatment, ballast is mixed with the inorganic wastewater in the equalization basin.

After equalization and neutralization, the treated ballast plus non-organic waste stream will comprise discharge 2. The discharge will be monitored and combined with other plant streams prior to final discharge. Since ballast consists primarily of sea water the dissolved solids concentration should be completely compatible with the receiving stream. Equalization and neutralization represent best available technology for the non-organic waste streams.

The boiler blowdown will contain relatively high concentrations of dissolved solids, some suspended solids, BOD, and phosphorus. The suspended solids will be primarily inorganic divalent cation salts. Since the phosphorus is an essential nutrient for biological treatment, boiler blowdown will be mixed with deoiled process water and treated at the main treatment facility.

The basic treatment concept for oily waste streams consists of oil removal, biological oxidation, and suspended solids removal.

The sulfide caustic stream will be pretreated in-plant using air oxidation to convert sulfide to thiosulfates and sulfates. The oxidation of sulfide is a water phase direct reaction with oxygen in solution. The oxidation is an exothermic reaction producing a significant amount of heat. Since the reaction rate of sulfide and oxygen in the vapor phase is much slower than a liquid, the excess heat must be dissipated to prevent sulfide stripping. Heat dissipation is accomplished in three ways: heating of the solution, heating of the air, and vaporization of water which leaves the column with excess air. Sulfides stripped in the column must be redissolved and oxidized. The effluent from the oxidation column will contain only trace quantities of sulfide.

The effluent from the oxidation tower is combined with water from the desalter, the olefin poly plant, and the oily water sewer and is routed to an API separator. Since each of these streams contain or has the potential to contain very high oil concentrations, the API separator is necessary to protect downstream operations.

Contaminated storm runoff is collected in an impoundment bases. This surge pond is used to collect the peak runoff and allow treatment at a controlled flow rate. The surge pond will be sized to collect runoff from a ten year, ten day storm. Water is released from the system at a constant rate equivalent to one tenth of the design volume per day. Initially estimates indicate that a constant maximum flow rate of 600 gallons per minute can be expected. A surface oil skimmer is provided to remove any floating oil from the pond. The surface skimmer will discharge to the API separator. This allows for a greater pumping rate (more water in oil), and the oil concentration in the pond will be kept at a very low level.

The effluent from the API separator is combined with the effluent from the storm surge pond. Following primary oil removal, alum and polymers are added to the oily waste streams. The chemicals provide a medium by which the very small oil particles can combine and grow to a size more easily separated from the water. The floculated wastewater is then further treated for oil removal in a dissolved air flotation (DAF) unit.

The DAF for process water and ballast water are similar in design. Effluent from the unit is pumped to a pressurization tank where the water is saturated with air at 35 to 55 psig. The saturated recycle is then combined with the influent water at atmospheric pressure. The drop in pressure results in the formation of very small bubbles. These bubbles adhere to the floculated particles and reduce their specific gravity sufficiently to produce a froth of oil and suspended solids on the surface of the unit. The froth is then skimmed from the unit and sent to the solid waste disposal system.

Wastewater from the sour water stripper, the sulfur plant tail gas cleanup, and pretreated HF alkylation wastes will have relatively low oil concentration. These waste streams are combined with deoiled process wastes and ballast water for biological oxidation. The combined streams are neutralized prior to bio–treatment to ensure maximum treatment efficiency. Nutrient in the form of phosphoric acid will be added at this stage as required.

Biological oxidation of soluble organic molecules in the deoiled wastewater will be achieved using a rotating biological contactor (RBC). A typical RBC unit consists of a series of thin, large diameter corregated plastic discs mounted on a central steel shaft to form unified treatment module. Micro–organisms adhere to the surface of the discs, which are partially (approximately 40 percent) submerged in the wastewater to be treated. As the discs are rotated, the micro–organisms are alternately exposed to the wastewater and to the air. Aeration occurs mainly when the biological filter is exposed to the air. At times the oxygen demand can exceed this natural transfer capacity of systems and supplemental aeration may be helpful to maintain high organic removal.

The discs can be turned using either a mechanical chain driver or using an aeration system. In the mechanical system each shaft is connected by a drive chain to its own motor. In the aeration system a small diameter pipe is submerged in the water near an edge of the discs. This pipe is parallel to the shaft and is fitted with several orifices. The individual discs in this system are fitted with cup like devices. As air discharges from the small diameter pipe, it catches in a cup causing that side of the disc to become more buoyant and results in rotation. A single blower can be used for all the shafts in this system.

As the biomass metabolizes organics in the wastewater, the biological growth on the discs increases. Eventually rotational stress shears a portion of the biomass from the surface of the disc. Typical of fixed growth biological systems, the excess sludge sloughs from the discs in an agglomerated mass. In this condition the sludge is quite amenable to gravity clarification.

Even though the clarifier will yield a very low effluent suspended solids concentration, a multimedia polishing filter will be added to ensure maximum effluent quality.

EFFLUENT GUIDELINES

The proposed wastewater discharge is covered by the "Effluent Guidelines and Standards for Petroleum Refining, Cracking Subcategory." In order to calculate the applicable effluent limitations the refinery process configuration must be calculated. The computation is provided in Table WWT-2. The process configuration (7.63) yields a process factor of 1.29. The size factor is 1.41. Using these two factors, the discharge limits on process wastewater are calculated in Table WWT-3.

Any storm water treated in the process wastewater treatment system increases the allowable discharge under the EPA guidelines. The allocation for storm water is presented in Table WWT-4.

Ballast water is also covered under the new source performance standards. Table WWT-5 summarizes these limits.

The projected effluent quality for the process wastewater treatment system and the guideline limitations are compared in Table WWT-6. In every case the projected effluent quality is considerably better than the required guidelines limit.

The ballast water system is compared to guidelines in Table WWT-7. The system proposed will provide considerably better treatment than is required by the guidelines.

TABLE WWT-1

ESTIMATED WASTE LOAD AND TREATMENT PLANT PERFORMANCE

Stream Number	1	2	3	4	5	6	7
Description	Uncontaminated Storm Water (Discharge) (1)	Demineralizer Regenerant	Hydrogen Plant	Ballast Water	Treated Ballast	Discharge 2	Sulfide Caustic
Average Flow (GPM)	N.A.	70	25	1,530	1,530	1,625	0.5
COD (ppm)	N.A.	N.A.	<20	420	138	<100	50,350
BOD (ppm)	TOC <35	N.A.	<10	155	15	< 15	8,440
Phenol (ppm)	N.A.	N.A.	<10	30(1)	0.17	<0.17	22
Oil & Grease (ppm)	<15	N.A.	<10	50(1)	8	< 8	N.A.
Sulfide (ppm)	N.A.	N.A.	<10	--	0.14	<0.14	40,600
NH_3(ppm)	N.A.	N.A.	<10	--	--	--	N.A.
TDS (ppm)	N.A.	4,000	<10	32,860	32,860	31.112	N.A.
TSS (ppm)	N.A.	N.A.	<10	85	15	<15	N.A.
pH	6-9	1-13	<10	--	6-9	6-9	12.7

Table WWT-1 (Continued)

Stream Number	8	9	10	11	12	13	14
Description	Desalter Effluent	Olefin Poly Plant	Oily Water	High Oil Water	Contaminated Storm Water	API Effluent	DAF Effluent
Average Flow (GPM)	235[2]	15	114	364.5	600	365-965	365-965
COD (ppm)	470[1]	N.A.	N.A.	--	500[5]	500[6]	350[6]
BOD (ppm)	300	N.A.	N.A.	--	N.A.	300[6]	--
Phenol (ppm)	20	N.A.	N.A.	--	N.A.	70[6]	30[6]
Oil & Grease (ppm)	750	500	1,000	817.0	50[5]	80	15[2]
Sulfide (ppm)	26	N.A.	N.A.	--	N.A.	N.A.	N.A.
NH_3 (ppm)	130	N.A.	N.A.	--	N.A.	30-80	N.A.
TDS (ppm)	5,000 [1]	N.A.	N.A.	--	N.A.	2,000	2,000
TSS (ppm)	1,600	N.A.	N.A.	--	40	200[6]	60
pH	7.2-9.1	N.A.	N.A.	--	N.A.	--	N.A.

Table WWT-1 (Continued)

Stream Number	15	16	17	18	19	20	21
Description	Boiler Blowdown	Stripper Bottom	Tail Gas Clean-up	HF Alkylation	Primary Effluent	Clarified Biotreated Effluent	Filtered Effluent (Discharge 3)
Average Flow (GPM)	45	569	10	2	991-1591	991-1591	991-1591
COD (ppm)	201 (4)	N.A.	N.A.	N.A.	300	135	115
BOD (ppm)	61 (4)	N.A.	N.A.	N.A.	150	30	15
Phenol (ppm)	0.1 (4)	20	N.A.	N.A.	20	0.17	0.17
Oil & Grease (ppm)	14 (4)	>2 (1)	N.A.	50	12	8	8
Sulfide (ppm)	N.A.	26	N.A.	N.A.	N.A.	0.14	0.14
NH_3 (ppm)	3 (4)	20	N.A.	N.A.	25	9	9
TDS (ppm)	2,500	N.A.	N.A.	27,500	2,000	2,000	2,000
TSS (ppm)	40 (4)	N.A.	N.A.	N.A.	40	30	15
pH	12 (4)	N.A.	N.A.	12.8 (3)	6-9	6-9	6-9

TABLE WWT-2

CALCULATION OF PROCESS CONFIGURATION

Crude	Atmospheric Distance	150,000 BPD	1.00			
	Vacuum Distance	79,850 BPD	0.53			
	Desalting	150,000 BPD	1.00			
			2.53	x 1	=	2.53
Cracking and Coking	Fluid Catalytic Cracking	65,141 BPD	0.43			
	Vis-Breaking	0	0			
	Thermal Cracking	0	0			
	Moving Bed Catalytic Cracking	0	0			
	Hydrocracking	37,070 BPD	0.25			
	Fluid Coking	25,475 BPD	0.17			
	Delayed Coking	0	0			
			0.85	x 6	=	5.10
Lube		0				0
Asphalt		0				0
		Process Configuration				7.63

Cracking Subcategory	
Process Factor	1.29
Size Factor	1.41
	1.82

TABLE WWT-3

DISCHARGE LIMITS FOR PROCESS WASTEWATER

	lbs/1,000 Barrels Feed Stock		lbs/Day	
	Maximum	Average	Daily Maximum	Monthly Average
BOD_5	5.8	3.1	1,583	846
TSS	4.0	2.5	1,092	682
COD	41.5	21.0	11,330	5,733
O&G	1.7	0.93	464	254
Phenolics	0.042	0.02	11.5	5.46
NH_3-N	6.6	3.0	1,802	819
Sulfide	0.037	0.017	10.1	4.64
Cr Total	0.084	0.049	22.9	13.4
Cr^{+6}	0.0072	0.0032	1.96	0.87
pH	6-9		6-9	

TABLE WWT-4

STORM WATER ALLOCATION TO PERMIT

	lbs/1,000 Gallons of Water		lbs/Day	
	Maximum	Average	Daily Maximum	Monthly Average
BOD_5	0.4	0.21	346	181.4
TSS	0.27	0.17	233	147
COD	3.1	1.6	2,678	1,382
O&G	0.126	0.067	109	58

Flow = 600 Gallons Per Minute Average
864 M Gallons Per Day

TABLE WWT-5

NSPS BALLAST WATER DISCHARGE LIMITATIONS

	lbs/1,000 Gallons Effluent Limits		lbs/Day	
	Maximum	Average	Daily Maximum	Monthly Average
BOD_5	0.40	0.21	881	463
TSS	0.27	0.17	595	374
COD	3.9	2.0	8,592	4,406
O&G	0.126	0.067	278	148

Flow = 1,530 Gallons Per Minute
2,203 M Gallons Per Day

TABLE WWT-6

COMPARISON OF NSPS AND PROJECT EFFLUENT QUALITY

Average Monthly lbs/day

	Dry Weather		Wet Weather	
	NSPS	Projected Effluent	NSPS	Projected Effluent
BOD	846	178	1,028	287
TSS	682	178	829	287
COD	5,733	1,368	7,115	2,198
O&G	254	95	312	153
Phenolics	5.46	2.02		
NH_3-N	819	107		
Sulfide	4.64	1.67		
Cr Total	13.4	-		
Cr^{+6}	0.87	-		
pH	6-9	6-9		
Flow (gpm)	991		1,591	

TABLE WWT-7

COMPARISON OF NSPS AND PROJECT EFFLUENT QUALITY FOR BALLAST WATER SYSTEM

Average Monthly lbs/Day

	NSPS	Projected Effluent
BOD	463	276
TSS	374	276
COD	4,406	2,536
O&G	148	147

Flow (gpm) = 1,530

THE PACE COMPANY CONSULTANTS & ENGINEERS, INC. 5251 WESTHEIMER
P.O. BOX 53473 HOUSTON, TEXAS 77052 AC 713 965-0311 CABLE: PACECO-HOUSTON TELEX 77-4350

ALTERNATE PROCESS DESIGN CONSIDERATIONS

ALTERNATE PROCESS DESIGN CONSIDERATIONS

INTRODUCTION

The design of the planned ALPETCO refinery and petrochemical complex is based on several criteria which affect both the selection of processes for the plant and their design characteristics. These criteria include:

- Minimal production of residual fuel oil
- Plant to be fueled entirely with by-product gas
- Refinery configuration to be compatible with the manufacture of petrochemicals
- All designs to be based on well-proven technology

These criteria are based on a blend of environmental and economic considerations. Residual fuel oil from the Alaskan crudes is extremely high in sulfur and will produce considerable amounts of sulfurous oxides upon combustion (1.14 pounds per million BTU). The virgin fuel oil is therefore unsalable in the West Coast or Japanese markets and, for the same environmental reasons, unusable as plant fuel. These constraints dictate a high conversion refinery in which transportation fuel and petrochemical production is maximized. With no production of heavy fuel oils the refinery must be fueled either by gas produced in the process units or by a sweetened light oil.

The decision to provide a process flow scheme compatible with petrochemical production is largely economic and is based on market supply/demand projections.

Given these basic criteria, the processing scheme takes on fewer possible variations and begins to crystallize.

ESSENTIAL PROCESSES

ALPETCO's refining operations will be heavily oriented toward conversion of relatively lower valued fuel oils to higher valued premium transportation fuels and petrochemicals. While there are several possible variations in the processing scheme consistent with such an operation, the overall refinery configuration is largely set by current technology. As a result, many of the processes planned by ALPETCO are basic refining units for which there are no practical alternatives. These units include the following:

- **Crude Distillation**

  The first step in any refining operation is separation of crude oil into fractions according to boiling point by atmospheric and vacuum distillation. No alternative technology exists; this process is essential.

- **Gas Concentration Units**

  This process is required in all major refineries to remove valuable C_3 and heavier components from lighter gases sent to the plant fuel system as well as to remove light ends from the liquid products.

- **Naphtha Hydrotreating/Catalytic Reforming/Aromatics Recovery**

  Reforming of naphtha feedstocks from the atmospheric distillation unit (straight run feedstock) and other units (cracked feedstock) is essential for production of aromatics (benzene, toluene, and xylene for petrochemical sales and heavier aromatics for gasoline blending). The naphtha hydrotreater is absolutely essential to protect the reformer catalyst from poisoning by sulfur, nitrogen, and metals. The aromatics extraction process and downstream distillation towers used for separation of the aromatics products represent the standard method used throughout the industry for petrochemical manufacture.

- **Merox and Amine Treating**

  These processes are necessary for removal of sulfur (hydrogen sulfide and mercaptans) from various refining streams, including fuel gas, gasoline, etc. This removal is essential both to minimize refinery sulfur emissions and to meet sulfur specifications for refined products.

OPTIONAL PROCESSES

For other processes, ALPETCO was able to select from alternate processing schemes based on environmental concerns and economic factors. Key issues affecting process selection in these areas are related below for the following refining topics:

- Residual Processing

- Catalytic Cracking/Hydrocracking Capacity Relationship

- Control of FCCU Regenerator Sulfur Oxide Emissions
- FCCU Recycle Policy
- Olefins Conversion
- Acid Gas Treatment

Economic Comparison

No detailed economic analysis of processing options is given herein. As previously noted, the basic design criteria of producing no residual or high sulfur fuel oil predetermines many of the processing alternatives. For this reason, there are very few major alternate schemes or processing units that reasonably fit into the ALPETCO refinery.

It should also be understood that the simple substitution of one process for another does not lend itself to a straightforward calculational analysis of the economic incentives of one unit over another. Because of the highly integrated nature of refinery economics, one must analyze all of the impacts within the entire refinery to analyze a single change. This work can only be done with a sophisticated refinery linear program model.

Residual Processing

Since ALPETCO does not plan to market No. 6 fuel oil or bunker fuel, the vacuum distillation column bottoms stream (1,050+ °F resid) must be converted to other products. Several alternate processes can be considered and are reviewed below. However, only delayed coking and Flexicoking are of practical significance, and the final choice focused on these two. It is very important to point out that both of these processes offer advantages, and there is no clear–cut decision between them.

- Residual Catalytic Cracking

  Several refiners are attempting to develop fluid catalytic cracking of a combined gas oil and vacuum resid feed. While this technology offers a method of converting a higher portion of the heavier components to gasoline, it is still regarded as frontier technology. Problems related to catalyst poisoning are still under study, and the process cannot yet be applied to large scale processing of resid except for extremely low metals feed. The Alaskan resid has relatively high metals contents (typically 50 ppm nickel and 80 ppm vanadium). In such a case, there would be a high equilibrium metals content on the circulating FCCU

catalyst resulting in higher rates of coke formation and reduced catalyst selectivity. The only commercially proven means to minimize accumulation of metals is to continually replace used catalyst. This practice would be economically prohibitive due to the high cost of catalyst replacement (approximately $1,000 per ton).

This operation would also be undesirable from an environmental standpoint. The vacuum resid contains 2.0 to 2.5 weight percent sulfur, roughly one third of which would appear as sulfur oxides in the flue gas from the FCCU regeneration. Scrubbing of this flue gas to remove sulfur would be extremely expensive and would result in large quantities of solid waste. Various types of flue gas scrubbers are discussed later in this section.

- Plant Fuel

It is, of course, technically feasible for ALPETCO to burn the vacuum resid as plant fuel. However, this approach is unacceptable from an environmental standpoint. The resid contains up to 40,000 tons per year of sulfur which would be released to the atmosphere as sulfur oxides.

- Deasphalted Oil/Partial Oxidation

An alternate, which would allow some of the vacuum resid to be fed to the catalytic cracker, would be to feed resid first to a solvent deasphalting unit. This process would remove most of the metals, a significant portion of the sulfur, and the heaviest hydrocarbons as pitch. The basis for the deasphalting process is the ability of a light hydrocarbon (typically butane) to extract oil plus a portion of the resins while precipitating asphaltic compounds. Metals are concentrated in the high-molecular-weight, condensed-ring molecules which are not extracted. The extracted oil is more highly paraffinic and is a satisfactory catalytic cracker feedstock after hydrotreating.

In most refineries which use a deasphalting process, the pitch is either recovered for asphalt sales or combined with desulfurized gas oil in residual fuel oil. There is no market for asphalt in large enough quantities for ALPETCO, and there will be minimal residual fuel oil product. Therefore, the only possibility currently available would be to feed this pitch to a partial oxidation unit to generate a synthesis gas composed of carbon monoxide and hydrogen. Part of this gas could be used to generate hydrogen for the refinery, while the remainder could be burned as fuel.

Very few refiners use partial oxidation to generate hydrogen because of the high investment cost required to deal with the environmentally unacceptable by-products. Both soot and sulfur recovery processes are needed as well as an acid gas separator to remove hydrogen sulfide and carbon dioxide from the shift converter effluent. Furthermore, there would still remain a solid soot by-product requiring disposal.

A typical process for testing the effluent from a partial oxidation reactor consists of the following items:

- A carbon slurry separator to remove soot in a water stream
- A carbon recovery system (coalescer and stripper column) using a light hydrocarbon to extract soot for recycle to the reactor while providing soot-free water to recycle to the carbon slurry separator
- A scrubber to remove traces of soot from the product gas stream
- A solvent contactor to extract H_2S, COS, and CO_2
- A water wash column to remove traces of solvent from product gas
- A stripper to separate acid gas from solvent
- A solvent reclaimer to remove solvent degradation products from solvent for recycle
- A unit to concentrate the hydrogen sulfide in the acid gas stream to permit it to be fed to a Claus unit

Thus, the processing of effluent gas requires an elaborate operation, much of which must be constructed of stainless steel and carefully stress relieved and heat treated to avoid stress corrosion cracking and other corrosion problems.

There is another aspect of partial oxidation which could present problems for ALPETCO. When the metals content of the resid is high (as it would be for ALPETCO), a portion of the soot recycle to the reactor must be purged and disposed of by some suitable method. Mixing in fuel oil for incineration is a common practice, but the total quantity of metals involved would have to be closely determined to guarantee proper design of the boiler or furnace.

- Delayed Coking

Delayed coking is a thermal process operated on a semi-continuous basis. Heavy feedstock is heated to 850-950 F in a coking furnace and charged to a coke drum. There are typically two drums in the process, one being charged while the other is being decoked. Vapors from the drum being charged flow to a coker fractionator for separation into gasoline and light and heavy gas oils. When filled, the drum is steamed out, cooled, and decoked with a hydraulic cutting tool. The blowdown and hydraulic decoking systems are designed for total water reuse. Green coke from the drum is then calcined to remove volatile components and to change the carbon content substantially to a crystalline form. The final product is an anode grade coke used in steel and aluminum manufacture.

From an environmental standpoint, delayed coking does not present any unusual problems except for the creation of coke dust, which is easily controlled. The types of pollution as well as the means of control are similar to other refinery processes. The coke product is a fairly easily handled solid. The primary concern with delayed coking is the marketability of the coke product since this is the only practical method for disposing of the large quantity of coke.

In ALPETCO's case, the product coke would contain about 1.5 to 2.5 percent sulfur. This level is high (most buyers of such coke require no more than 2.5 percent sulfur and 250 ppm vanadium), and it diminishes the marketability. At this stage factors such as shipping and the specific requirements of potential customers are uncertain.

Since ALPETCO is presently planning to use low sulfur fuel gas from a Flexicoker to provide a substantial portion of the refinery fuel, and since delayed coking does not produce large volumes of gas, a change to a delayed coking operation would necessitate a supplemental fuel source unavailable at Valdez. The refinery would therefore have to burn fuel oil roughly equivalent to the light cycle oil from the catalytic cracker (about 0.3 weight percent sulfur). While this oil would constitute a low sulfur fuel source, the total sulfur emissions from the refinery would increase. The fuel oil would contain about 0.17 pound of sulfur per million BTUs versus 0.10 pound of sulfur per million BTUs from Flexicoker fuel gas. Therefore, sulfur emissions from this source would rise by about 70 percent if a delayed coker were used. (By contrast, burning No. 6 fuel oil with 2.0 weight percent sulfur would release about 1.14 pounds of sulfur per million BTUs, or more than eleven times the sulfur from the Flexicoker gas.) Additionally, burning liquid fuel in place of fuel gas is economically unattractive.

Other environmental considerations regarding delayed coking include the following:

- Uncondensed steam from coke drum steamout
- Emissions from coker furnace
- Odors from coke cutting operation
- Hydrogen sulfide present in gas, hydrocarbon liquid, and steam condensate streams

- Flexicoking

The Exxon Flexicoking process is designed to maximize the conversion of heavy feedstocks to gas and liquid products. The heart of the process is a high temperature gasifier which effectively acts as a partial oxidation process for the extremely fine coke particles. In Flexicoking operations there are no coke drums to open, and therefore, all coke particles are contained in closed transfer lines and silos.

Alpetco has selected the Flexicoking option for the following reasons:

- The low BTU gas produced will supplement other refinery fuel sources, making the Alpetco refinery self-sufficient in energy requirements.
- The large quantity of low BTU gas produced will make it possible to minimize the amount of liquid product which must be downgraded to fuel oil.
- No large scale coke handling facility would be required.

Catalytic Cracking/Hydrocracking Capacity Relationship

Catalytic cracking is an important process for upgrading vacuum gas oil to gasoline and lighter products. Although strictly speaking it is not the only process that could be employed, it is the most important and most widely used process for this purpose. The fluid catalytic cracking unit (FCCU) is the most current technology and the most widely used. ALPETCO does have some flexibility in distributing feedstocks between the FCCU and the hydrocracker, and in selecting design parameters for these units. However, the use of the FCCU itself is really a practical necessity given ALPETCO's overall design criteria.

The hydrocracking process is normally used by refiners to process refractory streams (e.g., coker distillates) which are resistant to catalytic cracking. The

higher pressure and hydrogen atmosphere of the hydrocracker reduce these materials to more valuable compounds in the gasoline and middle distillate range. The proposed hydrocracker for ALPETCO is designed to be fed straight-run, heavy atmospheric gas oil to maximize the production of middle distillates (with some gasoline yield) and to minimize the need for catalytic cracking of this feedstock. The hydrocracker and catalytic cracker thus complement each other. The precise ratio of hydrocracker to catalytic cracker feedstocks has not yet been determined and, in fact, will likely vary at times in normal refinery operations. This ratio is set primarily by the relative markets for gasoline (increased demand of which favors catalytic cracking), kerosene, diesel, and jet fuel (increased demand for which favors hydrocracking).

The only environmental impact of a change in the hydrocracker to catalytic cracker feed ratio will be a minor change in the sulfur emissions from the catalytic cracker regeneration unit. This emission rate is roughly proportional to the total feed rate to the catalytic cracker and could vary as much as 20 percent as the feed rate increased or decreased.

Control of FCCU Regenerator Sulfur Oxides Emissions

The fluid catalytic cracking unit (FCCU) produces gasoline and lighter products from the vacuum gas oil streams which are the high boiling portion of the crude oil. Cracking is attained by contacting the oil with a circulating stream of fluid catalyst at high temperature (about 975 F). As the cracking reaction proceeds some side condensation reactions occur, resulting in coke formation which is uniformly deposited on the surface of the catalyst. In this unit the quantity of coke produced is about 6 percent of the fresh feed, or about 640 tons per day. The coke contains carbon, hydrogen, and sulfur compounds. The sulfur on the coke is approximately 10 percent of the sulfur in the FCCU feed.

After the catalyst is contacted with the oil it flows to the regenerator vessel. Air is fed to the regenerator to burn the coke deposited on catalyst resulting in a vast amount of heat liberation which supplies the heat for reaction. Flue gas from the regenerator which contains primarily water, carbon dioxide, and sulfur dioxide is vented to the atmosphere after passing through a waste heat boiler and electrostatic precipitator.

If no provision were made to remove sulfur from the feed or scrub the flue gas, approximately 20 tons per day of sulfur would be emitted to the atmosphere. The options for reducing this emission are discussed below.

- <u>Catalytic Cracker Feed Hydrotreating</u>

  Sulfur in the vacuum gas oil feed to the catalytic cracker can be removed in two ways. One method is to hydrotreat the gas oil upstream of the cracking unit in which about 95 percent of the sulfur is converted to hydrogen sulfide, stripped from the FCCU feed, and routed to the fuel gas system where the hydrogen

sulfide is subsequently removed in an amine unit before the gas is used as fuel. Of the remaining 5 percent, roughly 10 percent (or about 1.3 tons per day) is eventually released in the catalyst regenerator stack gases while the remainder is contained in the product streams.

In addition to removing the bulk of the sulfur compounds in the FCCU feed, hydrotreating has several additional benefits:

- Removal of nitrogen compounds
- Reduction in Conradson Carbon
- Reduction in polycyclic aromatics
- Reduction in feed metals

Each of these effects lead to increased production of gasoline, increased total liquids yields, and reduced catalyst consumption. In addition to these benefits, desulfurization of the feed also eliminates the need for hydrotreating of the net cycle oil produced from this unit.

The choice of feed hydrotreating instead of flue gas desulfurization obviously requires that the catalytic cracker never be operated with the hydrotreater bypassed since the flue gas and products from the process would contain excessive quantities of sulfur. Sufficient intermediate tankage has been provided between the hydrotreater and cracker so that brief outages of the former will not affect the feed to the latter.

The FCCU feed hydrotreater was chosen as the most effective means of regenerator sulfur oxide emissions control on the basis of

- Comparable performance with scrubbing techniques
- Economics
- Reduction of solid wastes

- <u>Flue Gas Desulfurization</u>

Sulfur may be removed from the FCCU flue gas by means of wet scrubbing techniques. With all of these methods of wet scrubbing, about 95 percent removal of sulfur oxides from the flue gas is achievable. Based on this level of removal, the emissions of sulfur as pure sulfur would be about 2 tons per day. The various flue gas desulfurization techniques are discussed below.

- Limestone Slurry Process

  With this process, limestone ($CaCO_3$) is crushed in a wet bath mill to form a slurry. The limestone slurry is then contacted with the regenerator flue gas. Sulfur dioxide dissolves in the limestone slurry and forms sulfurous acid (H_2SO_3). The sulfurous acid then reacts with the dissolved $CaCO_3$ to form calcium sulfite ($CaSO_3$). The $CaCO_3$ will also react with the oxidized sulfur compounds (H_2SO_4) to form gypsum ($CaSO_4$). Cleaned gas from the scrubber is reheated to avoid a visible water plume and an undesirable "acid rain" in cold weather.

  The calcium sulfite/calcium sulfate slurry from the scrubber is thickened and the resulting sludge must then be disposed of. The total quantity of sludge is about 190 tons per day.

- Exxon Flue Gas Desulfurization

  Exxon has developed a flue gas scrubbing process especially for the FCCU process. This system uses a caustic (sodium hydroxide) scrubber specifically designed for removal of catalyst fines, condensable hydrocarbons, and sulfur oxides. Disposal of the waste liquid stream from the scrubber is necessary. This stream would contain sodium sulfite (Na_2SO_3). The Exxon process does not require a separate electrostatic precipitator to eliminate particulates upstream of the scrubber. As a result, the required investment would be lower, but the quantity of solids present in the liquid stream to the waste disposal plant could complicate the disposal operation. Thus, although the Exxon process is proven in refinery service, the liquid and solid waste disposal problems associated with other flue gas desulfurization processes would remain.

FCCU Recycle Policy

The cycle oil from the catalytic cracking unit fractionator is an oil with a boiling range above 430 F. It is normally blended into distillate products to the extent allowed by product specifications or blended into No. 6 fuel oil as a viscosity controller. ALPETCO cannot blend all of its light cycle oil into distillate products and still achieve the necessary specifications. Alternately, ALPETCO does not want to produce large quantities of fuel oil. Practically speaking, there are only two alternates: feed to the hydrocracker or recycle to the catalytic cracker.

ALPETCO will have a hydrocracker processing heavy atmospheric gas oil. Mixing this feedstock with light cycle oil from the catalytic cracker is possible but not economically favorable.

A better alternate method for disposing of light cycle oil is recycle to the catalytic cracker. However, this stream contains a significant fraction of aromatics which cannot be easily cracked in their existing form. Therefore, a hydrotreating process was selected to provide some polycyclic aromatic saturation in order to improve the catalytic cracker yield.

Olefins Processing

Alkylation and polymerization are two processes commonly used in refineries to produce high octane gasoline from butenes and propylenes. The light olefins are produced by cracking heavy crude fractions in the fluid catalytic cracker and Flexicoker.

Alkylation

In the alkylation process either C_3 or C_4 olefins are combined with isobutane to produce mainly isoheptane and isooctane which have good octane blending quality. The reaction is accomplished in the presence of concentrated strong acids, either sulfuric (H_2SO_4 alkylation) or hydrofluoric (HF alkylation) acid. Of the two, refiners currently favor the HF alkylation process for economic reasons.

The H_2SO_4 process requires significantly more acid makeup then does the HF process because it is necessary to reject a portion of the equilibrium acid and add fresh concentrated acid to maintain the overall system's acid strength. A sulfuric acid plant would be required to process the rejected or spent acid and convert it to a concentrated acid. This operation would result in an increase in the overall refinery sulfur oxide emissions. For these reasons (economics and sulfur oxide emissions), the HF alkylation process has been selected.

Gasoline Polymerization Plant

It is not possible to alkylate all the C_3/C_4 olefins in this plant because the plant produces more olefin feedstock than isobutane. Therefore, a gasoline polymerization plant has been included to polymerize C_3 olefins and also C_4 olefins over and above those which can be alkylated.

Acid Gas Treatment

Hydrogen sulfide in the various refinery streams is removed by an amine solution and then stripped from the amine solution in the regenerator as acid gas. Also, hydrogen sulfide in process streams is stripped in a sour water

stripper to yield additional acid gas. Acid gas from the amine regenerator and sour water stripper is routed to the sulfur recovery plant where the bulk of the sulfur (95 percent) is converted to elemental sulfur.

Sour Water Stripper

Since the refinery cannot discharge foul water, an entire plant shutdown could be required if there were no disposition for the sour water. Two options are reasonable. First, a holding tank could be used to accommodate the sour water during the stripper outage. Second, a spare sour water stripper could be provided.

In this case it has been decided to spare the sour water stripper because of the large volume of water necessitating a very large holding tank and the associated problems with storing water in cold weather.

Amine Regeneration Unit

A similar problem arises with the amine regenerator (i.e., an outage would force a refinery shutdown). With this unit a holding tank is not practical because of the large volume of circulating amine.

A possibility could be to provide two 50 percent regenerators so that only a portion of the refinery would be forced to shut down. However, the decision has been made to provide 100 percent spare regeneration capacity.

THE PACE COMPANY CONSULTANTS & ENGINEERS, INC. 5251 WESTHEIMER
P.O. BOX 53473 HOUSTON, TEXAS 77052 AC 713 965-0311 CABLE: PACECO-HOUSTON TELEX 77-4350

ENERGY REQUIREMENTS

ENERGY REQUIREMENTS

The ALPETCO refinery is designed to be totally self-sufficient with regard to electricity and fuel needs. Process electricity, steam and fuel needs will be supplied by burning the light noncondensable gases from various process units, low Btu gas produced in the flexicoker, propane, and clarified oil from the catalytic cracking unit.

Table 2.1-1 presents the type and quantity of the fuel sources planned for use in the refinery. Approximately 97 percent of the refinery fuel needs are met by combustion of various refinery fuel gases, including Flexicoker low-BTU gas.

TABLE 2.1-1

ALPETCO REFINERY FUEL SOURCES

Description	Quantity MMBTU/D
Fuel Gas	48,372
Low BTU Gas	20,496
Propane	10,115
Liquid Fuel	2,176
TOTAL	81,159

The fuel requirements for individual refinery units are shown in Table 2.1-2 and are categorized by service categories. These service categories are as follows:

- Process heaters for high temperature process reactions or reactions at high pressures and associated elevated temperatures.

- Process heaters operating under conditions in which the process fluid is subject to thermal decomposition.

TABLE 2.1-2

Individual Refinery Unit Fuel Requirements

Process Units	Fuel Requirement MMBtu/D	Service Category
Crude Unit	11,687	General Heater
Vacuum Unit	6,858	General Heater
Distillate Hydrocracker	5,094	High Pressure/Temperature
Flexicoker	240	General Heater
Gas Oil Hydrotreater	2,691	High Pressure/Temperature
HF Alkylation	1,367	General Heater
Catalytic Condensation	958	General Heater
Naphtha Hydrotreater	7,756	High Pressure/Temperature
Platformer	11,284	High Pressure/Temperature
BTX Sulfolane & Prefrc.	3,490	General Heater
Hydrogen Plant	6,313	High Pressure/Temperature
Amine & Sulfur Plant	576	High Pressure Temperature
Power & Steam	22,831	Steam/Electricity

- Process heaters used for general heating service in which little or no thermal decomposition occurs.

- Steam generation and electrical generation units.

Process heaters used for high temperature and high pressure operations generally require close control of maximum tube metal temperatures and heat flux. Process fluid subject to thermal decomposition requires that the process heater be designed for close temperature control, short response times and be capable of instantaneous shutdown under conditions of flow stoppages, power failures, etc. Process heaters for general heating service and steam generation and electrical generation units have less severe design requirements regarding process control, circulation control, temperature control and heat flux control than the previously mentioned categories.

Fuel requirements during the construction phase is estimated to average 26,000 gallons per day of diesel fuel and 2,500 gallons per day of gasoline. This will include fuel for all construction equipment and temporary electrical power generation.

THE PACE COMPANY CONSULTANTS & ENGINEERS, INC. 5251 WESTHEIMER
P.O. BOX 53473 HOUSTON, TEXAS 77052 AC 713 965-0311 CABLE: PACECO-HOUSTON TELEX 77-4350

EVALUATION OF FUEL OIL

AS AN ENERGY SOURCE

EVALUATION OF FUEL OIL AS AN ENERGY SOURCE

Liquid fuels burned in process heaters to supplement other refinery fuels are derived from a variety of sources. Fuel oils are generally used; however, heavy tar oils, sludges and oily waste streams may also be used. The use of liquid fuel in refineries has been used to a limited degree in the past to supplement supplies of natural gas and refinery gases. More recently, however, liquid fuels have become important sources for replacing natural gas in the overall refinery fuel balance.

OIL FIRING TECHNOLOGY

Combustion of liquid fuels in process heaters is an established practice. Heaters and fuel systems utilizing refinery liquids are efficient and reliable. Fuel oils may be used in all heaters previously described in the refinery by-product gas section. However, there are special design considerations that must be taken into account both within the heater and fuel delivery system. The major difference is in the design of the fuel burners since mixing of oil and combustion air is more difficult to achieve because of the two-phase condition.

Burners used in oil firing are of two main designs. In outside mix burners, oil is released into a high velocity stream of steam inside the heater, where the oil is first mixed with air. These burners are not widely used since much of the energy of the steam is wasted and steam consumption is relatively high.

Inside mix burners are the most widely used. In these, the steam and oil are mixed in a chamber within the burner, and they issue together from the burner as a single stream. Foam formed in the mixing chamber is directed by the shape and direction of the burner tip so that the flame is of proper shape and size for the furnace box. As foam issues from the burner tip, it bursts into a fine mist of oil particles.

Residual fuels have good atomizing or foaming properties. Gas oils or distillate fuels do not atomize easily unless they are mixed with residual fuels.

Viscous fuels need to be heated to reduce viscosity. The higher the fuel temperature, the better the performance unless vaporization occurs or the water content of the fuel is high. However, at temperatures past the flash point, operation may be erratic and the flame may spritter.

Transfer and movement of the fuels is important especially for the heavier fractions. Heavy and high boiling point fuels must be heated and circulated continuously past the burner to prevent solidification in the line. The amount of circulation is 1.5 to 2.0 times the rate of oil burned. In large plants the circuit may be so long that a system of parallel flow must be used.

Individual circulation systems are often maintained for each unit. With this arrangement, the firing rate may be controlled by regulating the pressure in the line without individual burner adjustment.

In general, rotary pumps are preferable for fuel circulation. Reciprocating pumps may cause pulsation in oil pressure and "breathing" of the burner may occur. Although fuel may be fed by gravity at a head of only 10 to 15 feet, pressures of 40 to 60 psig are more commonly used. To obtain sufficient atomization of a light gas oil, pressures up to 125 psig may be required.

The amount of atomizing steam for inside burners ranges from 0.2 to 0.5 pound per pound of oil (1.6 to 4 pound steam per gallon) and may reach 10 pounds per gallon for outside mix burners. In general, the higher the pressure and temperature of the oil, the lower the steam consumption. Wet steam causes sprittering or sparks in the flame and if excessive may put out the flame.

Mechanical atomizing burners have not generally been used in the oil industry. However, a mechanical burner or combination steam and mechanical atomizing burner is useful when firing inferior fuels, such as cracked residues that contain suspended carbon or acid sludges from lubricating oil treating. These fuels are supplied to the burner at 200 to 300°F and at a pressure of 100 to 200 psig.

Extremely high melting point residues or fuels tend to congeal into particles (black smoke) which cannot be completely burned when the fuel meets large amounts of cold air at the burner. This can be alleviated by the use of short-flame combustion, substantial amounts of refractory at the mouth of the burner, preheating the combustion air to the melting point of the fuel, or preheating the fuel to 500 to 600°F.

FUEL OIL AVAILABILITY

There are numerous streams within a refinery that can be used to help meet fuel demand. These include production streams such as No. 2, No. 4, and No. 6 fuel oils and intermediate process streams such as heavy and light gas oils from vacuum and atmospheric crude distillation. When chosing a liquid fuel stream to supply process heat, it is important to select a clean stream to meet applicable environmental regulations and a stream that has a low economic value. In many cases, the heavier, higher sulfur containing products such as No. 6 oil, have lower economic value but may exceed applicable SO_2 standards. A tradeoff between value of the stream and sulfur content must be made. In most instances, a lighter desulfurized (treated) stream will be used in lieu of the heavier fractions.

At the ALPETCO installation, there are three liquid streams that could be considered for use as refinery fuel. These include two product streams, clarified oil (No. 6 fuel oil) and hydrotreated cycle oil (No. 4 fuel oil), both from the catalytic cracking unit. The third stream involves a combination of gas oils

from the crude distillation unit and flexicoker that are used as feedstock for the catalytic cracking unit. This stream is hydrotreated prior to entering the unit.

No. 6 fuel oil was ruled out since the sulfur content was considered to be too high. The decision to burn cycle oil or gas oil was based primarily on the more consistent quality of the cycle oil.

Only 335 barrels per day of fuel oil is required for supplementing the fuel system, or 3 percent of the total refinery heat demand. This fuel is continuously available as long as the FCCU is operating and can be stored in sufficient quantities to assure supply when the FCCU unit is down for maintenance. The availability of fuel oil is not considered to be a problem.

ENVIRONMENTAL CONSIDERATIONS

Emissions from the combustion of fuel oil are dependent upon the type and size of fired heater, grade and composition of the fuel, the firing and loading practices used, and the level of equipment maintenance. Table 2.1-1 presents the estimated emissions resulting from combustion of the hydrotreated cycle oil stream.

TABLE 2.1-1

ESTIMATED EMISSIONS FOR FUEL OIL COMBUSTION
(lb/MMBTU)

Particulates	SO_2	CO	NO_x	NMHC
0.014	0.150	0.036	0.16	0.007

Particulates are most dependent on the grade of fuel fired. Lighter distillate oils result in significantly lower particulate formation than do heavier residual fuels oils. For residual oils particulate emissions are generally a function of sulfur content. Low sulfur No. 6 residual oils generally exhibit substantially lower viscosity and lower asphaltene, ash, and sulfur contents than high sulfur No. 6; these characteristics result in better atomization and cleaner combustion.

Sulfur dioxide (SO_2) emissions are almost entirely dependent on sulfur content of the fuel oil with about 95 percent of fuel sulfur converted to SO_2.

Nitrogen oxides (NO_x) are formed during combustion of fuel oils from two sources: oxidation of fuel-bound nitrogen and thermal fixation of the nitrogen present in combustion air. Fuel NO_x emissions are primarily a function of the nitrogen content of the fuel and available oxygen while thermal NO_x emissions are dependent on peak flame temperature and available oxygen.

For residual oil combustion fuel nitrogen conversion is the most important NO_x forming mechanism. Thermal fixation is the predominant NO_x forming mechanism for units burning distillate oils due to the negligible nitrogen content of these fuels. Methods to control NO_x formation include: firing configuration, low excess air firing, flue gas recirculation, staged combustion or combinations of these methods.

Emissions of non-methane hydrocarbons and carbon monoxide are produced in minor quantities in units firing fuel oils. Proper operational and maintenance practices will control emissions of these two pollulants.

Refer to Section 3.4.3 for specific control technology planned for the ALPETCO refinery.

THE PACE COMPANY CONSULTANTS & ENGINEERS, INC. 5251 WESTHEIMER
P.O. BOX 53473 HOUSTON, TEXAS 77052 AC 713 965-0311 CABLE: PACECO-HOUSTON TELEX 77-4350

EVALUATION OF COAL AS AN ENERGY SOURCE

EVALUATION OF COAL AS AN ENERGY SOURCE

Direct coal combustion is not considered feasible for the ALPETCO refinery for the reasons given below. More detailed discussion of these reasons is included within this section.

1. Emissions resulting from burning coal would be significantly greater than from burning refinery fuel.

2. In order to supply the ALPETCO refinery with coal, the capacity of the Usibelli mine would have to be doubled or a new mine opened in another area.

3. The existing railroad would have to be upgraded to handle unit trains.

4. Coal receiving handling facilities for barge transport would have to be installed.

5. Coal would be considerably more expensive as fuel for the refinery than using byproduct oil and gases.

DIRECT COMBUSTION TECHNOLOGY

Coal can be used to supply process heat and steam for a refinery either by direct combustion or indirectly by coal gasification and combustion of the gas product. Direct combustion consists of three basic methods: stoker firing, suspension firing, and fluidized bed combustion (FBC). Of these technologies, stoker and suspension firing (pulverized coal systems) are well established due to their extensive use in coal boilers. FBC is a developing technology currently in the pilot plant and demonstration phase. Coal gasification is an old technology that was previously widely used in the U.S. and abroad before the advent of cheap natural gas. This technology is further discussed in Section 4.4.2.2.4.

Stokers

Fuel bed (stoker) firing is accomplished by pushing, dropping or throwing coal onto a grate in the high temperature region of the furnace by a device called a stoker. Air is forced up through the coal bed on the grate, the fresh coal is heated, volatiles in the coal are distilled off, and a coke or char is left on the grate. The coke or char then burns to carbon dioxide and carbon monoxide, leaving only ash material from the coal at the bottom of the bed.

Gaseous volatile matter distilled from the coal, and carbon monoxide produced by partial combustion of the coke are burned above the fuel bed with unconsumed primary air and with secondary air which is injected above the fuel bed. Approximately 40 to 60 percent of the total heat liberated in the furnace is produced by combustion of these gases.

Stokers can be divided into two general classes depending on the direction from which raw coal reaches the fuel bed: (1) overfeeds, in which the fuel comes from above and underfeeds, in which it comes from below. The overfeed group includes spreader and mass burning stokers. Underfeed stokers are generally referred to as single or multiple retort.

Spreader stokers are the most widely used in industry today because they are capable of burning a wide variety of coals ranging from high rank eastern bituminous coal to lignite. These stokers throw coal into the furnace over the fuel bed with a uniform spreading action which permits burning of the fine fuel particles. The larger pieces that cannot be supported in the gas flow fall to the grate for combustion in a thin, fast-burning bed. This allows relatively quick reponse to load fluctuations because ignition is almost instantaneous when the firing rate is increased. Turndown capability normally extends from maximum capacity to 20 percent of full load, but minimum load can be decreased to about 12 1/2 percent of maximum if provisions are made at the time of design.

The size consist of coal fed to a spreader stoker has a direct bearing on boiler efficiency and on the tendency of the installation to discharge particu-

lates. Coal segregation is a problem with any type of stoker, but the spreader stoker can tolerate a small amount of segregation because the feeding rate of the individual feeder-distributors can be varied. Size segregation, where fine and coarse coal are not distributed evenly over the grate, produces a ragged fire and poor efficiency.

The ash and moisture content in coals are factors to be considered in the selection of the grate type. If the ash content exceeds 10 percent, stationary or dumping grates should not be used unless heat release rates are reduced at least 25 percent. Traveling grates have no limit for maximum ash content.

Furnace temperature and the amount of suspension firing are functions of the moisture content of the coal as well as size consist. Very dry coal will frequently ignite in the furnace in the immediate proximity of the feeder discharge and a large volume of flame is generated. Wet coal (high moisture content) may agglomerate and fall to the grate before igniting. In this instance, practically all the fuel burns on the bed, lowering efficiency.

Pulverized Coal Systems

Pulverized coal fired systems represent an improvement over stoker fired units in a number of areas. These include:

- Improved thermal efficiency.
- Ability to use any size of coal available (as feed to the pulverizer system).
- Improved response to load changes.
- Reduction in manpower required for operation.
- Improved ability to burn coal in combination with oil and gas.

A pulverized coal system must pulverize the coal, deliver it to the fuel burning equipment and completely burn the coal with a minimum of excess air. The system must operate as a continuous process and the coal feed rate must be varied as rapidly and as widely as required by load variation.

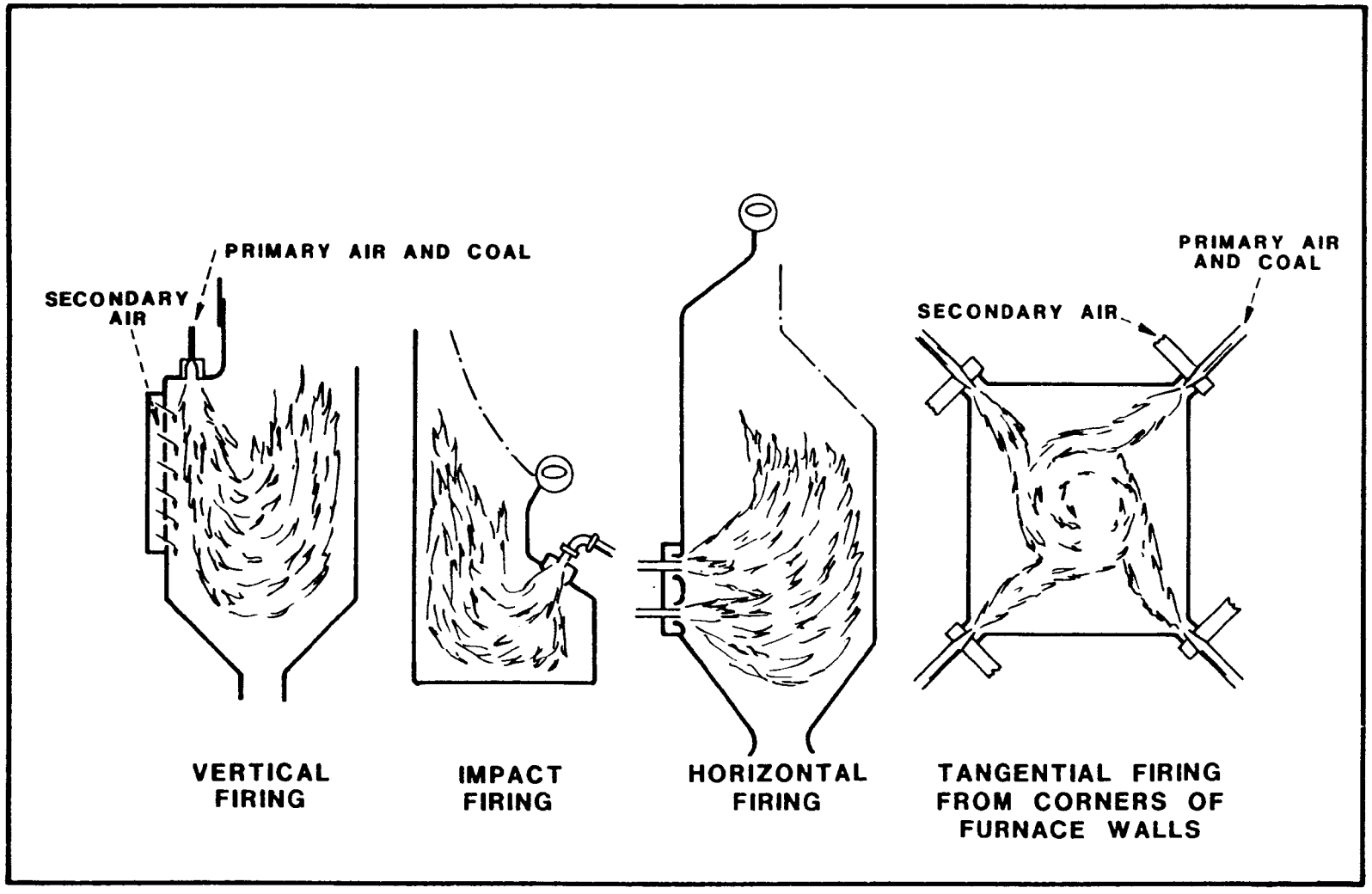

FIGURE 2.2-1
SUSPENSION FIRING METHODS

There are six basic equipment components in a pulverized coal system:

- The pulverizer, which reduces the coal to the required particle size.
- The burner which accomplishes the mixing of the pulverized coal with primary air and then with secondary air in the right proportions.
- Hot air for drying the coal (necessary for effective pulverization).
- Fans to supply air to the pulverizer and deliver the coal-air mixture to the burner.
- Coal feeder to control the rate of coal feed to each pulverizer.
- Coal and air conveying lines.

The burner is the most important component for firing pulverized coal. Much of the burner technology used for firing oil and gas is applicable to pulverized coal burning. However, the use of solid fuel in boilers and furnaces presents additional design problems.

Selection of burner type and firing configuration are two of the most important design parameters. Basically, there are four types of firing configurations. As shown in Figure 2.2-1, they are: vertical firing, impact firing, horizontal firing, and tangential firing from corners of the furnace walls. Determination of type is dependent on each individual application and each method must be evaluated at the time of design.

The two most commonly used methods are vertical and tangential firing. Vertical firing provides a relatively uniform distribution of temperature throughout the furnace, because of extended and progressive heat release. Because there is an absence of direct flame impingement, the furnace walls have a good service life. Completeness of combustion is good because the fuel is in the furnace for a relatively long time. The best applications for this type are those installations burning extremely low volatile coals which require long flame travel. The furnace shape and width are dictated by

flame shape and the need for a multiplicity of burners. Burners used for vertical firing are not easily adaptable to fuels other than coal.

Tangential firing is the most effective method for producing intense turbulence in the combustion zone of a furnace. This action is secured through the use of burners located in each of the four corners of the furnace, close to the floor or to the water-screen. The burner nozzles are so directed that the streams of coal and air are projected along a line tangent to a small circle, lying in a horizontal plane, at the center of the furnace. Intense mixing occurs where these streams meet. A scrubbing action is present which assures contact between the combustible material and oxygen, thus promoting rapid combustion and reducing carbon loss. A rotative motion, similar to that of a cyclone, is imparted to the flame body, which spreads out and fills the furnace area. Ignition at each burner is aided by the flame from the preceding one.

With tangential firing the furnace is essentially the burner. Consequently air and coal quantities need not be accurately proportioned to individual fuel nozzle assemblies. Turbulence produced in the furnace cavity is sufficient to combine all the fuel and air. This continuously ensures uniform and complete combustion so that test performance can be maintained throughout daily operation. With other types of firing, the fuel and air must be accurately proportioned to individual burners, making it difficult to always equal test results.

With tangential firing, combustion is extremely rapid, and a short flame length results. The mixing is so intense that combustion rates exceeding 35,000 Btu per cu ft per hr are practical under certain conditions. Because there is considerable impingement of flame over the furnace walls it is necessary that they be fully watercooled. This sweeping of the water cooled surfaces in the furnace by the gas increases the evaporation rate. Thus, in addition to absorption by radiation from the flame envelope, there is transfer by convection, and the resulting furnace temperatures are lower than with other types of burners, even though the heat liberation rates may be somewhat higher. Tangentially-fired furnaces are usually clean in the upper zone and, as a result, both the furnace and the boiler are comparatively free from objectionable slag deposits.

As with oil and gas, the most frequently used burners are the circular and cell types. Either type of burner can be equipped to fire any of the three principal types of fuel. However, combining pulverized coal firing with oil in the same burner should be restricted to emergency periods only, because coke formation is possible on the pulverized coal element.

In general, the pulverizier-burner combination can operate satisfactorily from full load to approximately 40% of full load with all pulverizers and burners in service. In some installations a pulverizer and set of burners, in addition to the number actually required, are provided to assure availability of the boiler unit in case of unscheduled outage of a pulverizer. Where spares are provided, it is generally most economical to operate with the greatest number of burners and pulverizers in service consistent with the capacity demand on the unit. Although the use of this excess equipment raises the minimum load which can be obtained without cutting out pulverizers and burners, other benefits offset this disadvantage.

Idle burners are subject to considerable radiant heat from the furnace and can attain temperatures above the coking temperatures of the coals. The use of alloy metals provides longer life for burner parts. However, if they are not adequately cooled below the coking temperature before being placed in service, coke may form and cause severe damage to the parts. The easiest way to cool the noozle is to run cold primary air through the pulverizer and burners for five to ten minutes and then immediately begin to feed coal before the nozzles can reheat. For this reason, a pulverizer and its group of burners should be operated as a unit rather than as individual burners. There is no simple way to cool individual burners before bringing them into service.

Fluidized Bed Combustion

Fluidized bed combustion (FBC) has come to the forefront as a major means of mitigating environmental problems, and expanding the use of coal resources while protecting the environment. The FBC concept is expected to give low sulfur dioxide and nitrogen oxide emissions along with high overall efficiency. In addition, FBC designs have the capability of burning many types of coal, as well as municipal sludge and refuse, oil shale, and heavy petroleum fractions.

The technology of burning coal in a fluidized bed for generation of steam and heat is still in the developmental stages, and the reliability of FBC technology has not been proved in a commercial installation. Just as important, the economics of using FBC technology have not been proved to be competitive with conventional coal firing, although preliminary studies have indicated an advantage for FBC. A description of FBC technology follows; however, FBC units are not considered feasible for refinery application for the above stated reasons.

As with pulverized coal firing, FBC provides large solid fuel surface area and long contact time between gas and solid particles, so that fuel is not shielded from oxygen by a thick layer of stagnant burned gases. FBC achieves an unusually high intensity of heat release in a small combustion volume.

The bed consists of a mixture of crushed limestone, dolomite, or inert material, and large ash particles, all of which are "fluidized" by the stream of air and combustion gases rising from the supporting grid beneath the bed. Original particle size of the bed material is about 1/8". The gas velocity is set so that the bed particles are partially suspended and move about in random motion, but do not blow away. Under these conditions, a gas/solid mixture behaves much like a boiling liquid in that it seeks its own level and can be moved readily through channels. Boiler tubes submerged in the bed remove heat at a high rate (extremely effective heat transfer) so that typical bed temperatures are in the range of 1400 to 1600°F.

Crushed coal (1/4" to 1/2" particles) along with the required bed makeup material is continuously added at fuel injection points. Within the bed, the coal burns very quickly, and the bed generally contains less than 2 to 4 percent carbon. Most of the ash resulting from combustion of the coal is in relatively small, light particles which are swept out of the bed by the flue gas. If high sulfur coal is being burned, sulfated bed material is continuously withdrawn to maintain bed volume and activity for sulfur capture. If low sulfur fuel is being burned, the bed is composed of inert material, such as alumina or sand, and bed makeup and withdrawal rates would be very low or negligible.

Fludized bed combustion is an effective method for controlling emissions from high sulfur fuels. For this purpose, the sorbent bed is limestone, dolomite, or lime. Assuming a limestone feed, the first reaction at bed temperatures is calcination.

$$CaCO_3 \rightarrow Ca + CO_2$$

The sulfur in the fuel burns to sulfur dioxide, SO_2, and bed conditions are maintained to favor sulfation of the lime to gypsum.

$$CaO + SO_2 + 1/2\ O_2 \rightarrow CaSO_4$$

The limestone sorbent feed rate is set in accordance with the sulfur content of the fuel, and sufficient cleanup of SO_2 is achieved so that no further treatment is required for compliance with sulfur emission regulations. By contrast, a stoker or pulverized-coal boiler emits most of the sulfur in the fuel as SO_2, and high sulfur fuels cannot be burned in these boilers without desulfurization of the fuel gas.

With respect to nitrogen (NO_x) emissions, FBC units exhibit inherent advantages over conventional boilers using stokers and pulverized coal firing. This is because the bed temperature is maintained at 1400 to 1600°F, well below the 2500°F+ which is characteristic of conventional boilers. The lower FBC temperatures result in correspondingly lesser formation of thermal NO_x. Most FBC operations produce NO_x emissions below the EPA limits for new steam generators without the necessity of any special combustion modifications or design features.

Another valuable characteristic of FBC technology is its wide tolerance to type and quality of solid fuels. Caking and non-caking coals, refractory cokes and chars, and solid waste such as bark and wood wastes can all be burned efficiently in a fluidized bed. The principal detail requiring careful design is to provide the capability of reasonably uniform fuel introduction at multiple points within the bed. Generally one fuel feed point should be specified for about ten square feet of bed area. Not only is the average bed temperature relatively low, but temperatures throughout the bed are quite uniform if good fluidization is maintained. The absence of hot spots means that fuels having low-softening-point ash can be effectively burned without serious ash fusion or clinker formation.

A final advantage for FBC is that of size. Heat release rates of over 100,000 BTU/hr/cubic foot of expanded bed volume, or 50,000 - 60,000 BTU/hr/cubic foot of firebox have been achieved in atmospheric FBC pilot plants. This can be compared with about 20,000 BTU/hr/cubic foot of firebox for a typical pulverized-coal-fired boiler. - The high intensity of heat release plus the excellent heat transfer rates to boiler tubes submerged in the bed make it possible that FBC boilers up to about 250,000 pounds steam per hour can be designed for "package" shipment by rail (compared to the maximum coal-fired package size of about 50,000 lbs/hr currently available with conventional firing). This package feature should help to make the future erection cost of large sized FBC boilers significantly lower than for corresponding field-erected stoker-fired or pulverized-coal-fired units.

APPLICABILITY TO PROCESS HEATERS

Fired process heaters are used extensively in refineries for applications such as distillation and vacuum tower preheaters, catalytic reformer preheaters and reheaters, hydrotreaters, and hydrocrackers. These heaters are also used in reboiler service in alkylation unit deisobutanizers and as olefin unit pyrolysis furnaces.

Fired heaters are used for three broad service categories:

- Heaters for high temperature process reactions (including high pressure service).
- Heaters operating under conditions in which the process fluid is subject to thermal decomposition.
- Heaters used for general heating service in which little or no thermal decomposition occurs.

Four fundamental requirements influence the design of fired heaters to varying degrees: process control, circulation control, temperature control, and heat flux control.

A major constraint to the use of direct coal combustion for process heater firing occurs in areas requiring close control of process temperatures. Coal systems are not designed for short response times, instantaneous shutdowns under conditions of flow stoppages, power failures, etc. This eliminates coal as an immediate contender in heaters where thermal decomposition on the tube walls is critical. Close control of maximum tube metal temperatures and the control of metal temperatures in pressurized systems operating near the ash fusion point are difficult. Thus, immediate applications for direct coal firing in process heaters are limited to the third category, general heater service. This includes distillation column preheaters and some fractionation column reboiler applications.

Coal firing technology has not been sufficiently developed for commercial application in indirect fired process heaters. While it may be possible to fire many process units with coal, there are some basic differences between coal fired boilers and

process furnace practice that make direct firing of coal in refineries quite difficult. Direct fired coal use would result in radical changes to the geometry of process heaters including volume per unit heat released, tube spacing and configuration, and refractory use.

Heater Design Factors

Fuel and process fluid characteristics are critical to the design of fired heaters. For example, metals and sulfur content of fuel oils have a significant effect on corrosion within the fired heaters. Vanadium vaporizes, then condenses as V_2O_5 in the fire box, forming a slag layer which destroys the protective nickel chromium film on iron base alloys. Internal tube supports are most affected, due to their higher temperatures. When vanadium exists in the fuel, vertical tubes not requiring extensive internal support are preferred. Vanadium also forms a eutectic with refractory materials, which causes them to melt at lower temperatures.

The process fluid characteristics set the maximum allowable radiant absorption rate. This rate is determined by the temperature at which thermal degradation of the process fluid inside the tubes becomes significant. Higher absorption rates are permitted with colder fluids and fluids at higher velocities. Unduly high rates, however, result in increased maintenance costs due to higher refractory and tube support temperatures.

A well designed heater will absorb approximately 70 percent of the total heat in the radiant section of the furnace. This percentage is influenced by the inlet temperature of the material being heated. The hot combustion gases leaving the radiant section of the furnace almost always pass through a convection section in order to recover the maximum amount of heat that is economical. While the radiant surface costs more per square foot than the convection section, the lowest overall cost will result if the heat absorption rate in the radiant section is made as high as practicable.

Radiant absorption rates can be expressed in many different ways, the most common of which are:

- BTU per hour per square foot of projected tube area.
- BTU per hour per square foot of external tube surface (circumferential area).
- BTU per hour per square foot of the total wall surface covered by radiant absorbing tubes.

Frequently, more than one of the above will be discussed in the same reference. Indirect fired process heaters are generally specified by using the radiant absorption rate based on external tube circumferential area, because the refractory walls re-radiate to the backside of the tubes. Typical tube absorption values are shown in Table 2.2-1.

Steam boiler radiant rates are specified differently due to different tube geometries. The tubes are part of the walls, so that only half of the tube diameter is exposed to radiant heat. To compare process heater and steam boiler radiant heat absorption rates, it is necessary to convert the number in Table 2.2-1 to a "per flat plane wall area" basis. With this new basis:

RADIANT HEAT ABSORPTION RATES
(BTU/hr-ft^2 flat plane wall area)

	Maximum	Average
Oil- or Gas-fired Boiler	100,000	65,000
Coal-fired Boiler	80,000	40,000
Oil- or Gas-fired Crude Heater	28,000	21,000

Figure 2.2-2 illustrates typical tube geometries and radiant heat profiles around steam boiler and process heater tubes with the maximum rates at 0° (on the side facing the flame). A hypthetical coal-fired process heater tube profile is dotted in assuming the coal unit walls are designed with integral tubes.

Figure 2.2-3 compares relative sizes and radiant section volumes for equal BTU output steam boilers and process heaters. Note the parallel between radiant absorption rates and unit volumes.

TABLE 2.2-1

TYPICAL AVERAGE RADIANT FLUX RATES
GAS/OIL-FIRED PROCESS HEATERS

Basis: Two diameter nominal spacing, fired on one side, refractory backing

Service	Average Radiant Rate, BTU/Hr/Ft^2
Crude Unit Heaters	
Atmospheric	10,000 - 14,000
Vacuum	8,000 - 10,000
Reboilers	10,000 - 12,000
Hot Oil Belt Heaters	8,000 - 11,000
Catalytic Reformer Heaters	7,500 - 12,000
Delayed Coker Furnace	10,000 - 11,000
Visbreakers	
Heating Section	9,000 - 10,000
Soaking Section	6,000 - 7,000
FCCU Feed Heaters	10,000 - 11,000
Steam Superheaters	9,000 - 13,000
Hydrotreaters, Hydrocrackers	10,000

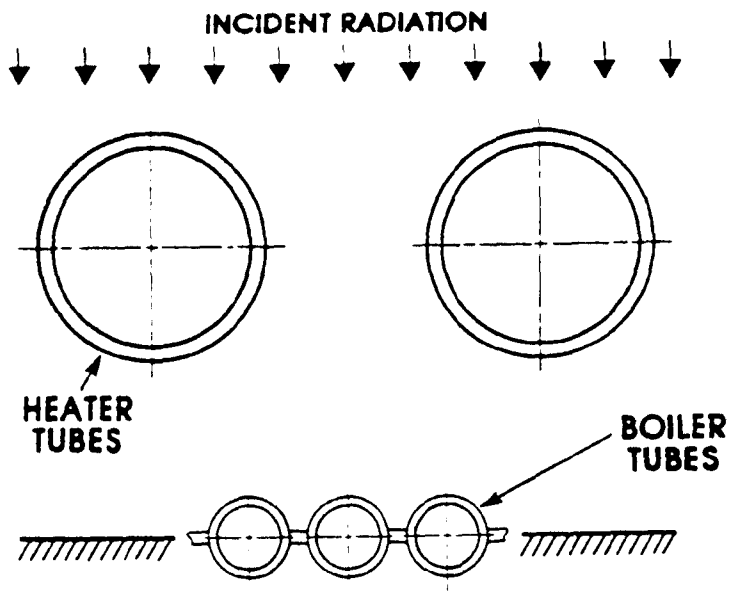

TYPICAL RADIANT TUBE GEOMETRIES USED IN STEAM BOILERS AND PROCESS HEATERS

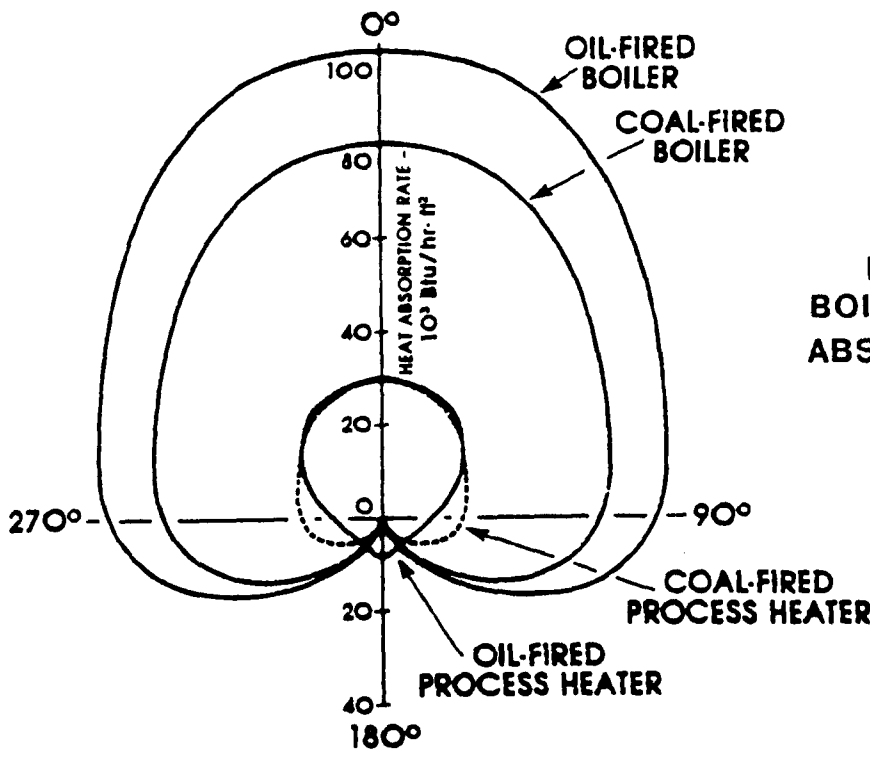

HEATER RADIANT BOILER AND PROCESS ABSORPTION PROFILES

FIGURE 2.2-2

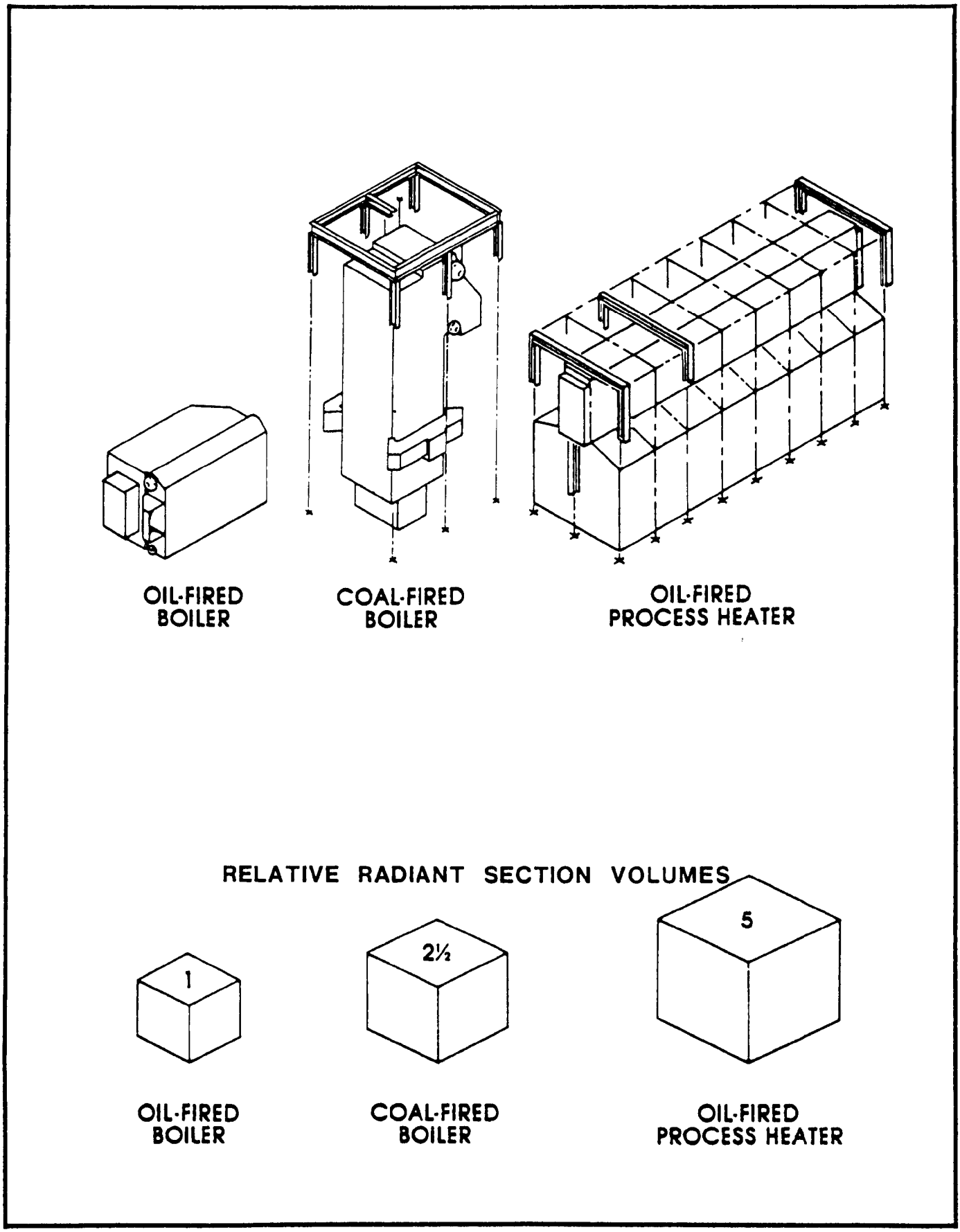

FIGURE 2.2-3
SIZE COMPARISON OF STEAM GENERATORS AND CRUDE HEATER

Comparable heat capacity process heaters and steam generators are designed using very different criteria. Typical design values for three fired units are shown in Table 2.2-2. The table includes those parameters, shown underlined, which are normally used for boiler and crude heater designs. Note that this table applies mainly to the design of radiant sections. Except for taking into account the maximum combustion gas velocities shown, as well as ensuring that there is adequate tube spacing to prevent blockage by ash, the design of the convection section in boilers follows procedures similar to those used for fired heaters. Gas velocities are restricted in coal fired boilers to limit tube erosion by fly ash.

There are four major areas in fired heater configurations that are quite different than for coal fired boilers. These include: tubes, burners, metals and metal temperatures, and casings.

Tubes

Petroleum is a non-homogeneous material that is subject to thermal cracking. Some portions of a mixed stream boil before other portions, crack or form coke. Two-phase flow and various pressure drop problems make it very difficult to split up a stream into many parallel passes (as in a natural circulation boiler) so the tendency is to design for a single pass or for as few passes as possible with flow control for each parallel steam. This leads to the use of large tubes. Large tubes, corrosion allowances, and high pressure result in thick walls. This, combined with corrosive components and high temperatures leads to alloys and results in very heavy and very expensive tubes. Because of their cost, it is desirable to utilize the entire tube circumference as a heating surface. This requires relatively wide spacing between tubes in a furnace as well as use of refractory walls behind tubes to re-radiate heat to the back side of the tubes, away from the flame.

Positioning radiant tubes away from the refractory wall is not acceptable in a coal-fired unit due to the high probability of ash accumulation behind the tubes. Boiler tubes are of a very different design. Industry now generally uses a finned and welded construction with relatively small diameter tubes joined by integral fins welded in large wall panels that completely eliminate the need for refractory.

TABLE 2.2-2

TYPICAL BOILER AND HEATER DESIGN PARAMETERS

Design Parameter	Oil- or Gas-fired Boiler	Coal-fired Boiler	Oil- or Gas-fired Crude Heater
Average radiant absorption per unit circumferential tube area (BTU/hr/ft^2)	N.A.[a]	N.A.	12,000[b]
Average radiant absorption per unit flat plane wall area (BTU/hr/ft^2)	65,000	40,000	21,000[c]
Maximum radiant absorption per unit flat plane wall area (BTU/hr/ft^2)	100,000	80,000	28,000[d]
Heat release rate per unit volume (BTU/hr/ft^3)	50,000	20,000	10,000
Heat release rate per unit wall area (BTU/hr/ft^2)	170,000[b]	80,000[b]	40,000
Maximum gas velocity in convective zone (ft/sec)	120	70	30

[a] Values not defined.

[b] Underlined value denotes primary design parameter.

[c] Based on tube pitch of 2 nominal diameters (1.8 O.D.) located 1.5 nominal diameters (1.35 O.D.) from refractory wall.

[d] Secondary design parameter used to predict maximum tube metal/film temperatures.

Process furnace tubes are usually straight so that they can be more easily inspected or replaced. In addition, large, heavy walled, sometimes brittle tubes are difficult to bend and form. Coal fired boiler furnaces and furnace tubes are relatively complex in shape. This is a natural result of the need for: steeply inclined furnace floors as required to channel ash into a water sluice; sloping roofs and partitions which are used to assist in mixing furnace gases and completing combustion as required because of the unbalance between the large coal burners; flexible division walls and platen surfaces which are excellent shapes for the final furnace cooling stage at the top of the furnace; intricately shaped tubes which form burner throats and enormously prolong throat life; sharp bends in wall tubes to provide small completely water cooled openings for observation doors and wall blower openings.

Burners

Because the heated product is often somewhat unstable, many process heaters employ large numbers of small burners to provide uniform heat flux. Uniform heat flux reduces hot spots and coking and eases control problems in parallel pass units. There are no major problems in adjusting fuel and air flow between large numbers of oil or gas fired burners. Coal burners, in general, are much larger and have many more problems. Metering of coal between large numbers of burners is much more difficult. Since the coal/air stream is not homogeneous, it cannot be metered by inlet fuel pressure or pressure drop across an orifice.

Metals and Metal Temperatures

In general, boiler furnace tubes are carbon steel since metal temperatures are low. Process heaters frequently require alloy steel for internal corrosion resistance and for high temperatures.

High fluid temperatures and corrosion resistance requirements necessitate more alloy material in process furnaces. The amount of alloy material exposed to direct radiant furnace heat is much higher and the materials operate at relatively high temperature, making process furnaces not only more costly but also more subject to external corrosion from metals that may be present in dirty fuels.

COAL AVAILABILITY

Coal deposits located in the State of Alaska are the logical sources for coal to be utilized in the proposed ALPETCO refinery. Coal resources in Alaska are estimated at 582 billion tons[1] of bituminous, subbituminous, and lignite to a depth of 3000 feet. The magnitude of this Alaskan resource suggests that a readily available supply of coal for the ALPETCO refinery exists. Factors which will affect the availability of Alaskan coal were reviewed and are discussed in the following.

Deposits

Coal is located in nearly all of the regions of Alaska as shown on Figure 2.2-4. The coal deposits in the southern portion of Alaska have been considered as potentially viable sources for the proposed ALPETCO refinery because transportation costs would be prohibitive for other areas. These deposits include Nenana, Matanuska, Beluga-Susitna, Kenai, and Bering River.

Nenana field is located along the north slope of the Alaskan Range and is actually an elongated series of coal basins from 1 to 30 miles wide and about 150 miles long. The coals of the Nenana field are Tertiary in age generally varying between 8500 and 9500 BTU/lb with a sulfur content of around 0.2 percent[1]. Beds vary in thickness up to 100 feet and outcrop in numerous areas of the field. The sandstones which comprise most of the overburden and interburden are friable and areas of multiple thick seams with low overburden are amenable to surface mining methods. The Usibelli Mine located near Healy in the western portion of the field is the only currently operating coal mine in the state with production around 700,000 tons per year. Nenana reserves are estimated on the order of 450 million tons.

The Matanuska coal field, located about 75 miles northeast of Anchorage, is about 10 miles wide and 40 miles long. Coals in the field vary from subbituminous in the western portions to anthracite in the eastern portions. Past mining activities were concentrated in the Wishbone Hill district of the field where a production rate of slightly over 285,000 tons per year was realized in 1953. Presently only a small amount of coal is produced from the area for local home heating. Coal in the Wishbone Hill

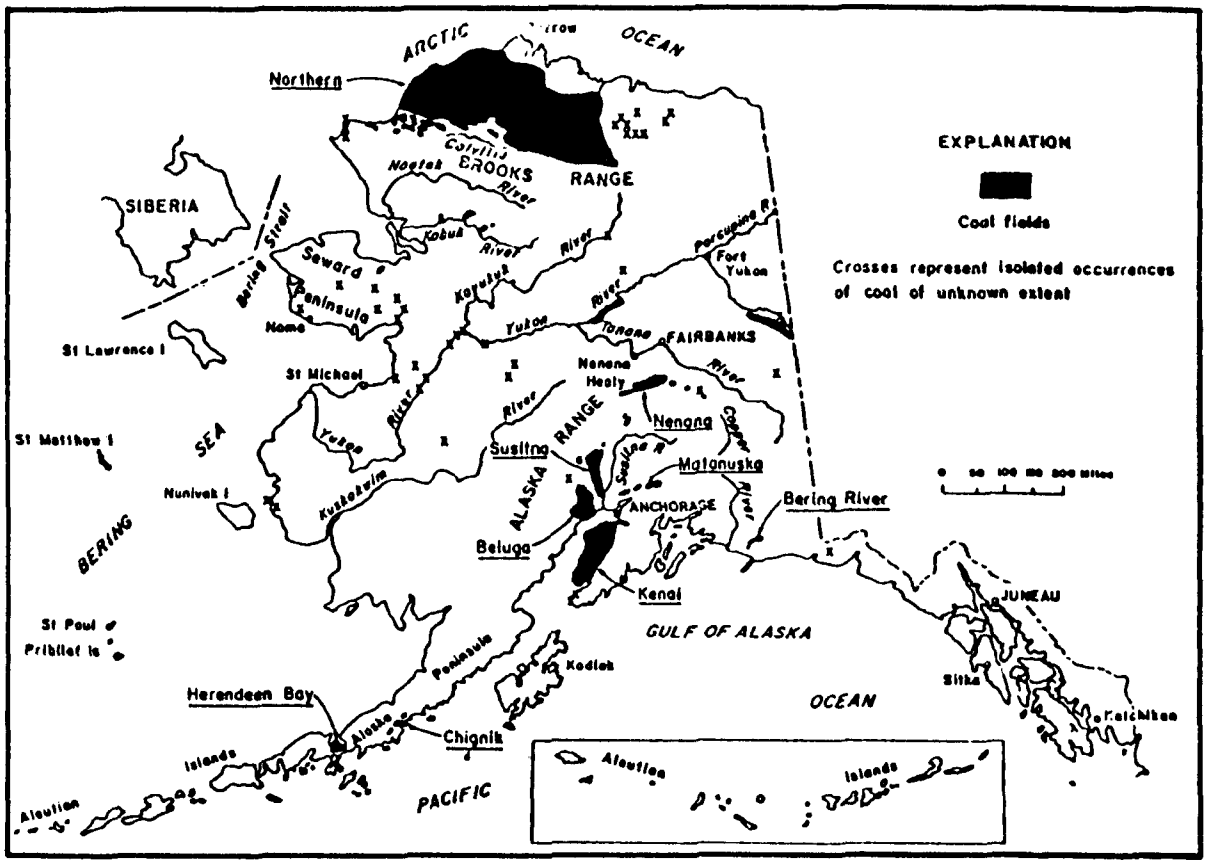

FIGURE 2.2-4
LOCATION OF ALASKAN COAL FIELDS

district of the field varies in heating value from 10,400 to 13,200 BTU/lb[2] with a sulfur content of 0.2 to 0.3 percent. Reserves are estimated at 112 million tons[1].

The Beluga-Susitna field is located across Cook Inlet from Anchorage where coals are found in the Kenai Formation of Tertiary age. Coal beds in the field are reported[3] up to 55 feet thick with favorable overburden ratios. The coal in the field has been described as low sulfur subbituminous coal varying from 9000 BTU/lb[2] to 7550 BTU/lb[3] with a sulfur content around 0.2 percent. The field is located near tidewater; however, no commercial development of the field has been undertaken. In place coal resources in the southern portion of the field (Beluga), based on information obtained from outcrops of 5 seams only with individual bed thicknesses ranging from 23 feet up to 65 feet, are estimated at 2.25 billion tons[1].

The Kenai coal field is located along the western one half of the Kenai peninsula across the Cook Inlet from the Beluga-Susitna coal field. Coals in the field are found in the Tertiary Kenai Formation as are those of the Beluga-Susitna Field and have been related to them[1]. Coal is exposed in the southern portion of the field and was mined at Port Graham and at Homer. Generally coals of the field vary in rank from lignite (at about 7000 BTU/lb[1]) to subbituminous (ranging from about 8300 to about 9000 BTU/lb[4]) with sulfur content on the order of 0.2 to 0.4 percent.

Bering River Field is located near the Gulf of Alaska about 225 miles southeast of Anchorage in a somewhat continuous belt of about 50 sq. mi. in area. The coal in the field is found in the Tertiary Kushtaka formation and varies in rank from west to east from low-volatile bituminous to anthracite depending on the intensity of structural deformation[4]. Heating values vary from around 10,000 BTU/lb to over 15,000 BTU/lb and sulfur content varies from about 0.5 percent to nearly 5.0 percent[4]. The complex structure and lenticular nature of the coals of this field require a much higher degree of drilling control than is available in order to estimate reserves and resources on a meaningful basis.

Of the five fields of interest in the southern portion of Alaska, three have the highest potential of providing coal for the ALPETCO refinery. The Nenana Field is the location of the only producing coal mine in Alaska. The Matanuska Field produced coal in the past and could conceivably produce coal for the refinery. The southern portion of

the Beluga-Susitna Field (Beluga) has been the focus of recent leasing and exploration activity, and the proximity to tidewater suggests production from this field in the future.

Coal Requirements and Potential Sources

Heating requirements which could be supplied by coal in the proposed ALPETCO refinery are estimated at 2.17×10^{10} BTU/day or 7.92×10^{12} BTU/year. Presently the Usibelli coal mine located in the Nenana coal field near Healy on the Alaskan Railroad is the only coal mine in Alaska operated throughout the year for long term customers. Production from the mine is about 700,000 tons per year which serves a mine mouth power plant, local utility markets along the railroad belt, and Fairbanks 112 miles to the north of the mine. The coals in the Healy area have an average heating value of 8200 BTU/lb, sulfur content of 0.2 percent, ash content of 10 percent and moisture content of 25 percent.(5) Cutoff stripping ratio is 3:1 (overburden to coal thickness) with individual seam thickness maximum of around 60 feet. Reserves for the mine are reported(6) at 200 million tons. The mine is reportedly capable of doubling production with present equipment.(6) Based on average heating value of the coals in the Healy area the Usibelli mine would have to produce an additional 483,000 tons per year of coal to serve the refinery. Considering a refinery life of 30 years, committed reserves of about 14.5 million tons would be required. On the basis of the information reported(6), the Usibelli mine would be capable of supplying the coal with no further additions of equipment.

Based on the lower range of heating value for coals from the Matanuska Field (10,400 BTU/lb), a new mine with an annual tonnage of about 381,000 tons would be required. Reserves for the mine would have to total about 11 million tons.

Beluga Field coals have been reported to range from 7550(3) to 9000(2) BTU/lb. At the lower range of heating value (7550 BTU/lb) a new mine would have to produce nearly 525,000 tons per year. Reserves of about 16 million tons would be necessary for a refinery life of 30 years.

The coal tonnages required for the refinery are small in comparison to utility use of coal in the lower 48 states. The Usibelli Mine reportedly is looking for additional markets and would be capable of supplying the additional coal. A market for coal is all

that is required by potential developers interested in the Matanuska Field and Beluga Field.

Transportation

The proposed refinery located at Valdez is somewhat isolated from the existing railroad system as shown in Figure 2.2-5. For this reason, coal transportation to Valdez will probably require the use of barges. Coal from the Nenana Field would be transported to Whittier by rail (310 miles), transferred to barge at Whittier and unloaded near the refinery. Coal from the Matanuska field would be shipped by rail to Whittier (104 miles) and then by barge to the refinery. The barge distance from Whittier to Valdez is about 90 miles.

Coal from the Beluga Field would be shipped to tidewater (10 to 20 miles) and loaded on barges and shipped to Valdez. The barge distance to Valdez is approximately 400 miles.

Development of coal transfer terminals at either Whittier or the western shore of Cook Inlet (Beluga) would provide facilities for an export market of Alaskan coal.

The Alaska railroad is upgrading the right of way to handle tonnages typical of a coal unit train in the lower 48 states. However, the tonnages of coal required could be delivered over the existing system. On typical unit train basis (10,000 tons/train) only one train shipment per week would be required.

Delivered Costs

The cost of coal is difficult to project for the ALPETCO refinery due to the number of uncertainties associated with a project in Alaska for which there are no other examples. The costs presented in the following are preliminary and subject to much more detailed study.

The selling price FOB the mine for Usibelli coal is in the neighborhood of $15.00/ton. New contracts for this coal at the tonnage required for the refinery could perhaps be negotiated at a lower price. Table 2.2-3 presents an estimate of the delivered cost of coal from the Usibelli Mine to the ALPETCO refiners.

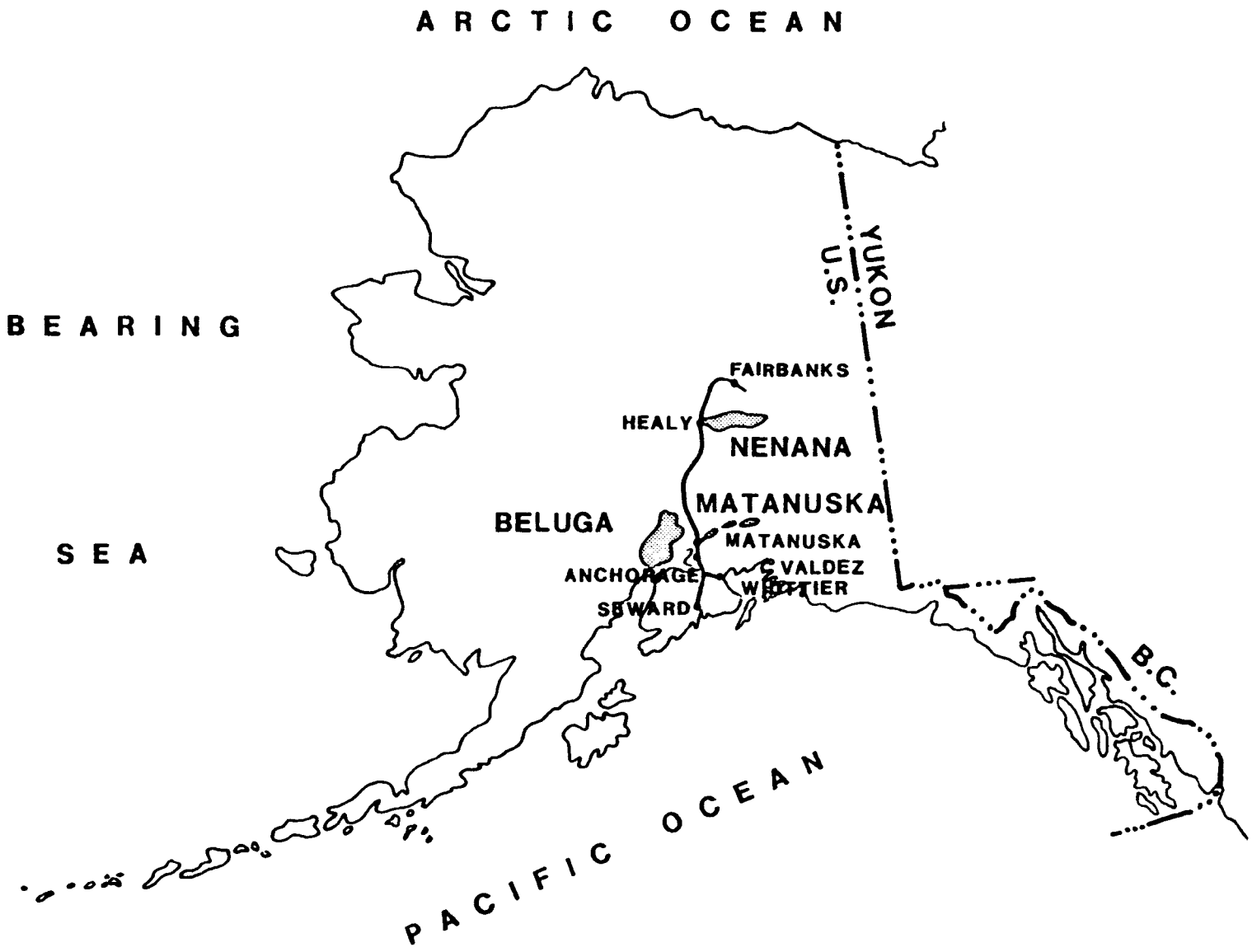

FIGURE 2.2-5

MAP SHOWING ALASKA'S RAILROAD

TABLE 2.2-3

ESTIMATED DELIVERED COST OF USIBELLI COAL

	Per Ton	Per MM BTUs
Selling Price 8200 BTU/lb FOB the Mine	$15.00	$ .91
Rail Charges, Mine to Whittier 309 mi. @ $.02 mile	6.18	.38
Transfer Charges Rail To Barge	2.00	.12
Barge Rates, Whittier to Valdez 90 mi.[8]	4.08	.25
Unloading Charges Barge to Shore	2.00	.12
Total Delivered	$29.26	$1.78

Mining costs for Matanuska and Beluga coals were estimated based on the following. In 1975[7], the selling price of underground mined coal in Alaska was estimated at $18.42/ton for a DCF of 20%. Surface mined coal at Beluga was estimated[7] at $10.20 for a DCF of 20%. Inflating these estimated selling prices by 10% per year from 1975 and estimating transportation charges results in the 1979 delivered costs presented in Tables 2.2-4 and 2.2-5.

Based on many uncertainties the delivered cost of coal is projected at $1.78 to $1.85/10^6 BTU. As the Usibelli mine is already in operation it would appear to be the best source from the very preliminary estimates made.

TABLE 2.2-4

ESTIMATED DELIVERED COST OF MATANUSKA COAL

	Per Ton	Per MM BTUs
Selling Price Inflated 10%/year from 1975, 10,400 BTU/lb FOB the Mine	$26.96	$1.29
Rail Charges, Mine to Whittier 104 mi. @ $.02/ ton mi.	2.08	.10
Transfer Charges Rail to Barge	2.00	.10
Barge Rates, Whittier to Valdez 90 mi.[8]	4.08	.20
Unloading Charges Barge to Shore	2.00	.10
Total Delivered	$37.12	$1.79

TABLE 2.2-5

ESTIMATED DELIVERED COST OF BELUGA COAL

	Per Ton	Per MM BTUs
Selling Price Inflated 10%/year from 1975, 7550 BTU/lb FOB the Mine	$14.93	$ .99
Rail Charges, Mine to Tidewater 20 mi. @ 5¢/ton mi.	1.00	.07
Transfer Charges Rail to Barge	2.00	.13
Barge Rate, Beluga to Valdez 400 mi/	8.00	.53
Unloading Charges Barge to Shore	2.00	.13
Total Delivered	$27.93	$1.85

BREAKDOWN OF FLUE GAS DESULFURIZATION
ON NEW AND RECENTLY RETROFITTED COAL BOILERS

Control Technology	Utility Percent	Industry Percent
Lime Slurry Process	26.0	3.9
Limestone Slurry Process	53.0	1.1
Fly Ash Alkalai Process	7.4	0.0
Aqueous Sodium Process	2.0	65.4
Aqueous Ammonia Process	0.0	11.1
Double Alkalai	2.4	18.4
Magnesium Oxide Process	1.9	0.0
Wellman-Lord Process	6.2	0.0
Aqueous Carbonate Process	1.1	0.0

Utilities have favored the calcium based processes over any other process, with the exception of compliance coal (no longer considered an option by the EPA). Approximately 79 percent of those plants using FGD systems use lime or limestone processes. Most of the plants without FGD burn compliance coal.

Industry has historically chosen the higher cost sodium based systems to ensure reliability. Some 84% of all FGD systems applied to industrial boilers have been sodium based processes. An additional 11% of these industrial applications have used an ammonia based system, which is very similar to sodium with respect to scaling properties.

Absorption processes for nitrogen oxides control are still developmental and will not be used except in experimental plants for some time. This may not be a problem if the regulations for NO_x are not tightened significantly, because NO_x can currently be controlled efficiently by good burner design and modifications to the combustion parameters (e.g. volume and temperature of combustion air).

BREAKDOWN OF PARTICULATE CONTROL TECHNOLOGIES
USED ON NEW AND RECENTLY RETROFITTED
COAL BOILERS

Control Technology	Utility Percent	Industry Percent*
Mechanical Collection	1.9	29.0
Electrostatic Precipitation	86.0	19.6
Fabric Filters	0.7	0.0
Wet Scrubbers	12.5	84.9

* Since some industrial facilities utilize combinations of these controls, the total is greater than 100 percent.

Sulfur dioxide is controlled by contacting the gas stream with an alkaline solution to absorb the SO_2 and neutralize it. In general, the cost to operate an FGD system depends on the cost of the alkali used, and sludge disposal costs. The overall efficiency depends on the type of system, and the time that the system is operational. The availability of an FGD system, expressed in percent, is an indication of the time a system is actually in operation over a specified time period. Lime and limestone scrubbing systems tend to have lower on-stream factors than sodium based systems due to the scaling tendency of the former systems. Raw materials for the sodium based systems are generally more expensive than those for lime or limestone systems.

In large utilities the reduced alkali costs for the lime or limestone processes can be used to balance the cost of scaling problems. This situation may not be experienced in smaller industrial facilities. In industry, availabilities must be high to insure reliable operation of the production facilities. Sodium based systems (the aqueous sodium process and the double alkali process) have historically provided this type of dependability. Lime and limestone process are improving and may be used more by industry in the future. The double alkali process is more attractive because it uses sodium carbonate as the scrubbing agent. This alkali is regenerated, and the lower cost lime or limestone used for regeneration forms a stable sludge for disposal.

An evaluation of new and recently retrofitted utility and industrial boilers (same basis as that for particulates above) has resulted in the following mix of FGD systems.

ENVIRONMENTAL CONSIDERATIONS

Since direct firing of coal in process applications is not currently feasible, the discussion on environmental considerations for direct coal firing will be limited to those emissions and control technologies applicable to coal fired boilers.

Summary

The combustion of coal produces three major air pollutants: particulates, sulfur dioxide and nitrogen oxides. These pollutants, and the other minor pollutants discharged to other media (land or water) can be controlled in a variety of ways. This section describes the control technologies which are commonly used on coal fired boiler installations.

Particulate control is most effective with some of the higher cost technologies, such as electrostatic precipitators. Fabric filters, although effective in lower temperature operation, have not been used extensively on high temperature boiler flue gas. The technology is relatively new and a considerable amount of space is required. Large plants and utilities have historically had to meet the tightest standards for particulate emissions, and high efficiency electrostatic precipitators (ESP) have been used. Smaller industrial applications have favored low cost mechanical collection, used in conjunction with wet scrubbing. This relationship is illustrated in a survey of new and recently retrofitted utility and industrial boilers. For plants with contracts awarded or announced between 1970 and January 1, 1978, the following table shows the mix of particulate control technologies used. These percentages are based upon boiler capacity. The industrial percentages are based on boilers having flue gas desulfurization equipment. No data were available for industrial boilers having particulate control alone. If these were considered, the percentage mix for electrostatic precipitators would go up, because ESP provides efficient control without lowering the temperature or humidifying the gas stream. Wet scrubbers require the flue gas to be reheated before disposal to the atmosphere, and are therefore generally used in applications requiring both particulate and sulfur dioxide control.

Regulated Pollutants

Burning coal produces a myriad of pollutants that must be controlled to meet environmental standards. Converting from oil and gas to coal firing results in increased air emissions, in both quantity and number of constituents, as well as possible ash handling problems, and fugitive emissions from coal storage and handling systems within the plant. The basic air emissions that must be controlled to comply with Environmental Protection Agency (EPA) standards are:

- Particulates
- Sulfur oxides (SO_x)
- Nitrogen oxides (NO_x)
- Non-Methane Hydrocarbons (NMHC)
- Carbon monoxide (CO)

The EPA also is currently investigating other emissions from direct coal fired plants for which standards may be issued in the future. These include:

- Benzene soluble organics (BSO)
- Particulate polycyclic organic matter (PPOM)
- Benzo (a) pyrene (BaP)
- Polyhalogenated biphenyls

In addition, combustion releases a number of trace elements contained in coal into the environment. Research is being conducted to identify the fate of trace elements in combustion processes.

Emissions from industrial installations are governed by the same principles as in the utility industry but pollutant data are not as complete nor as readily available. Combustion equipment design and operating practices are different and consequently, emission factors are different. Generally, industrial coal combustion equipment is smaller and operates less efficiently. Emissions of nitrogen oxides tend to be lower due to decreased furnace temperatures, while emissions of hydrocarbons, carbon monoxide, and organics tend to be higher due to incomplete combustion. SO_x emissions are

virtually the same in either case. Particulate emissions from coal burning are strongly affected by the efficiency of control equipment, which is generally lower in the industrial sector. Although the quality of data is poor, estimates of emissions of - polycyclic organic matter show that these emissions in the industrial sector are about an order of magnitude higher per unit of fuel than in the utility sector.

Combustion Emissions

Stack emissions from coal fired industrial boilers without control devices are listed in Table 2.2-6 as a function of the firing method and the coal used. These data were tabulated by the EPA from information reported by industry and from specific field tests.

Emission factors have been estimated for particulates, SO_x, CO, NO_x, and hydrocarbons, all in terms of pounds per million BTU fired. These factors are given in Table 2.2-7.

Ash Handling Emissions

Ninety nine percent of the total ash handling emissions (air, water, and solid waste effluents) from industrial combustion sources result from coal fired systems. The extent of control used for fly ash collection affects the total amount of ash recovered. Estimates of fly ash control on different sizes of installations are given below:

Capacity 10^6 BTU/hr	Percentage of Installations With Control Equipment
10-200	21.0
200-500	53.7
500+	70.0

The distribution of ash between bottom ash and fly ash also influences the quantity of emissions from ash handling. This distribution ratio is estimated in Table 2.2-8. A typical coal ash composition is listed in Table 2.2-9.

TABLE 2.2-6

AIR EMISSIONS FOR INDUSTRIAL COAL FIRED INSTALLATIONS WITHOUT CONTROL EQUIPMENT

	Particulates lb/MMBTU	Gases lb/MMBTU				Organics lb/MMBTU		
		SO_x	NO_x	HC	CO	BSO	PPOM	BaP
Bituminous (All installations)	1.84	2.53	.65	.018	.065	.0031	$1.7/^{-5}$	$4.3/^{-6}$
Pulverized Dry	1.87	3.37	.79	.013	.046	.0036	$2.2/^{-5}$	$5.5/^{-6}$
Pulverized Wet	1.51	3.36	1.33	.013	.044	.0038	$2.1/^{-5}$	$5.5/^{-6}$
Cyclone	.30	3.40	2.45	.013	.044	.0025	$1.4/^{-5}$	$3.6/^{-6}$
All Stokers	3.60	3.40	.68	.044	.088	.0048	$3.8/^{-5}$	$6.8/^{-6}$
Overfeed Stokers	3.59	3.40	.66	.044	.086	.0064	$3.7/^{-5}$	$9.5/^{-6}$
Spreader Stokers	3.59	3.42	.66	.04	.088	.0043	$2.4/^{-5}$	$6.2/^{-6}$
Underfeed Stokers	3.60	3.40	.68	.044	.088	.0097	$5.6/^{-5}$	$1.4/^{-5}$
Lignite (Spreader Stokers)	1.75	1.25	0.9	.07	0.7	.0045	$2.6/^{-5}$	$6.5/^{-6}$

TABLE 2.2-7

EMISSION FACTORS FOR FOSSIL-FUEL COMBUSTION WITHOUT CONTROL EQUIPMENT

Type of Combustion Unit	Emission Factor, lb/10^6 BTU of fuel consumed				
	Particulates	Sulfur Oxides	Carbon Monoxide	Hydrocarbons	Nitrogen Oxides
Power Plant, pulverized coal					
General	0.64 A[a]	1.25 S[b]	0.04	0.012	0.72
Cyclone Burner	0.08 A	1.52 S	0.04	0.012	2.2
Commercial and Industrial stoker					
Spreader	0.52 A	1.52 S	0.08	0.04	0.60
Others	0.02 A	1.52 S	0.08	0.04	0.60

[a] The letter "A" indicates that the weight percentage of ash in the coal should be multiplied by the value given. Example: If the factor is 0.64 and the ash content is 10 percent, the particulate emissions before the control equipment would be 10 times 0.64, or 6.4 lb/10^6 BTU (about 160 lb/ton).

[b] "S" equals the sulfur content (see footnote (a) above) in weight percent.

TABLE 2.2-8

BOTTOM/FLY ASH RATIOS FOR VARIOUS COMBUSTION UNITS

Type of Combustion Unit	Bottom Ash/Fly Ash
Pulverized - Dry Bottom	15/85
Pulverized - Wet Bottom	35/65
Cyclone	90/10
Stokers	65/35

Handling and disposal of the ash can be accomplished by various methods. For large amounts of ash, the removal systems generally used are either pneumatic conveyance with landfill, or water slurry with settling ponds.

For small installations, ash handling generally is accomplished by the day method. Ash is removed from the boiler on a daily basis and moved by truck to a landfill site.

Water effluents from ash ponds represent another pollution control problem. Water cleanup systems must be included in the capital cost of a coal fired installation. Typical constituents of ash pond discharge water are listed in Table 2.2-10.

Ash discharges to the air result from wind erosion at landfill sites and from dry ash collection and transport. Typical air emissions for an industrial installation average about one pound of particulates per ton of ash collected. Local siting requirements generally determine the air loading from landfill operations.

Other Emissions

Other sources of air pollution are cooling towers, coal storage and handling, and coal preparation. These sources are considered to be relatively minor and primarily of local or in-plant importance. However, little quantitative information is available.

Water pollution can arise from bleed streams discharged from wet scrubber recycle systems, from cooling tower and boiler blowdown, and from intermittent discharges from the boiler feedwater treatment area. Once-through cooling systems use large volumes of water and potentially cause thermal pollution, stream depletion

TABLE 2.2-9

TYPICAL COAL ASH COMPOSITION

Constituents	% by Weight
Silica (SiO_2)	30-50
Alumina (Al_2O_3)	20-30
Ferric Oxide (Fe_2O_3)	10-30
Lime (CaO)	1.5-4.7
Potassium Oxide (K_2O)	1.0-3.0
Magnesia (MgO)	6.5-1.1
Sodium Oxide (Na_2O)	0.4-1.5
Titanium Dioxide (TiO_2)	0.4-1.3
Sulfur Trioxide (SO_3)	0.2-3.2
Carbon and Volatiles	0.1-4.0
Boron (B)	0.1-0.6
Phosphorous (P)	0.01-0.3
Uranium & Thorium	0.0-0.1

TABLE 2.2-10

TYPICAL PROPERTIES OF ASH POND DISCHARGE WATERS

Constituents	Range of Concentration mg/l
Total Solids	300-3500
Total Dissolved Solids	250-3300
Total Suspended Solids	25-100
Hardness	200-750
Alkalinity	30-400
SO_4	100-300
Al	0.2-5.3
Cr	0.1
Na	20-173
NH_3	0.1-2
NO_3	0.1-6.1
Cl	20-2000
Cu	0.1-0.3
Fe	0.02-2.9

and contamination of downstream water with additives used to prevent fouling of condenser surfaces. Fugitive emissions such as runoff from coal storage and handling, and leaks around plant equipment may prove to be significant also.

The major solid waste problem other than that from ash handling is the solid waste generated from throwaway flue gas desulfurization (FGD) systems. These sludges vary a great deal in their characteristics. Lime and limestone wastes can liquefy and flow under stress if they are not chemically altered (fixed) in some way. Some processes generate sludges that have good stability without fixation.

Particulate Control Technology

Particulate matter from the combustion of coal occurs mostly in the form of fly ash. Dust loadings in the flue gas leaving a boiler can range from 2 to 13 gr/SCF of dry gas. There are several types of equipment which can be used to control particulate matter: mechanical collectors, electrostatic precipitators, fabric filters, and wet scrubbers. Several control devices in each of the categories are described below.

Removal efficiency for particulate matter is dependent upon many parameters, but particle size is usually the controlling factor. Fly ash is the major contributor to stack gas opacity. If it is not removed, a visible plume is produced which may result in dust "fall out" on the surrounding area. Collected particulate matter can be combined with bottom ash and used as landfill, road base material, granular material for roofing, aggregate in concrete blocks and preformed concrete, asphalt mix material, cinders for icy roads, insulation and grit for sand blasting. The handling of collected ash may result in environmental problems from fugitive ash emissions and leachate from ash storage and landfills. Controls which can be used in the ash handling area are discussed later.

Mechanical Collectors

Mechanical collectors use centrifugal, inertial or gravitational forces to separate particulate matter from the gas stream. Cyclones use centrifugal forces and can be purchased singly or in multiple units containing a number of smaller cyclones. The inertial collector effects an abrupt change in the direction of flow causing the momentum of the particulate matter to separate it from the flue gas. The settling

chamber uses gravitational forces to accomplish particulate removal. The three major collector types are listed below.

- Single Cyclones
- Multiple Cyclones
- Inertial Collectors

Electrostatic Precipitators

Electrostatic precipiators use electrostatic forces to charge and remove particulate matter from the gas stream. One major efficiency factor is the electrical resistivity of the particles to be recovered. The combustion of low sulfur western coal generally produces fly ash with a higher resistivity (at 150°F) than does the combustion of high sulfur coal. This higher resistivity interferes with precipitator operation. Several methods which can be used to overcome the high resistivity problem are:

- Provide additional precipitator capacity.
- Use a two-stage electrostatic precipitator.
- Change the flue gas temperature to achieve a more favorable resistivity.
- Use a wet electrostatic precipitator.
- Add fly ash conditioning agents to change the resistivity or otherwise modify electrical conditions in the precipitator.

Single Stage Precipitator. The single stage electrostatic precipitator is made up of a number of positively charged, vertical, parallel plates. Between each plate is a discharge cathode made up of a series of fine wires hung vertically 6 to 12 inches apart. Gas passing between the plates is ionized by the intense electric field created between the positively charged plates and the negatively charged wires. Particles are then ionized by the gas and migrate toward the plates as the gas proceeds through the precipitator. Agglomerated particulate matter attached to the walls is shaken free by small hammers called "rappers". Fly ash settles to a dust hopper located below the precipitator and is removed by a screw conveyor or rotary valve. Factors which influence the precipitator performance are the time a particle is exposed to the electro-static field, the strength of the field, the ratio of plate area to gas flow, the gas viscosity, particle resistivity, sulfur content of the fuel, the temperature, carbon

content of the particulate, particulate loading and the ability to remove the particles from the collector plates.

Two Stage Precipitators. This precipitator is identical to the single stage precipitator except that ionization is accomplished in a separate stage.

Hot Side Precipitators. The resistivity of fly ash changes with temperature. At higher temperatures, such as those at the economizer outlet (370°C), the resistivity of fly ash from the combustion of low sulfur coal is low as compared to its resistivity at lower temperatures. Thus, locating the precipitator after the economizer but before the air preheater will result in stable, highly efficient operation because of the high temperatures. The precipitator in this situation can be designed for relatively high current densities and will provide stable operation over a relatively wide range of fuel compositions.

The primary disadvantage of the hot side precipitator is the need to handle an increased gas volume (50 to 100% higher) due to operation at elevated temperatures. Other than that, the precipitator is identical to the normal single stage precipitator.

Wet Electrostatic Precipitators. In wet precipitators, water is used continuously to wash dust from the collecting electrodes. The water not only eliminates the need for rappers, but also prevents reentrainment. In addition, the gas stream is saturated with water vapor, thus eliminating the problem of fly ash resistivity. Consequently the wet electrostatic precipitator may be an attractive method of collecting high resistivity fly ash. The major disadvantage is cost. Wet precipitators must be fabricated from corrosion resistant materials. This may increase the cost to 2.5 times that for dry precipitators. The major corrosion problem arises from the reaction of the water with the chemicals in the gas stream. The potential water pollution problems associated with the fly ash slurry will, in most cases, increase the capital and operating costs as well.

Fly Ash Conditioners. Many chemical agents have been investigated to determine their effectiveness as fuel or flue gas additives. The objective is to reduce fly ash resistivity and thus increase collection efficiency. A partial list of these chemical

additives is shown below. Several proprietary additives have been developed by a number of companies, the composition of which is probably a blend of those shown.

Aluminum Sulfate	Phosphorus Pentoxide
Ammonia	Sodium Carbonate
Ammonium Bisulfate	Sulfamic Acid
Ammonium Sulfate	Sulfur Trioxide
Hydrogen Chloride	Sulfuric Acid
Iron Oxide	Vanadium Oxide
Iron Sulfate	Water or Steam
Organic Amines	

Fabric Filters

Fabric filters use tubular shaped fabric bags to filter out particulate matter contained in the flue gas. Filtration is efficient and normally results in removal efficiencies greater than 99%. The efficiency of each individual bag, however, varies with time as dust accumulates on the bag surface. After a fixed period of time, a section of the baghouse, containing a number of individual bags, is isolated from the gas stream. Each bag is cleaned by one of various methods. When cleaning is complete, the section is returned to service and another section is removed for cleaning. This cleaning cycle continues until every bag has been cleaned. The cleaning sequence can be operated manually when needed or it can be automated to function continuously.

Wet Scrubbers

Wet scrubbers remove particulate matter from the gas stream by contacting the gas with water. The mechanism for particulate removal is primarily inertial impaction (i.e. impaction on water droplets or on wetted surfaces). The exit gases from all wet scrubbers are saturated with water and cooled below the inlet temperature. In general, these gases must be reheated to provide buoyancy for disposal by tall stacks and to eliminate the visible water vapor plume. Wet scrubbers also require treatment and/or disposal of the scrubber solution to remove suspended solids and treat any chemicals leached from the fly ash.

Capital costs for wet scrubbers are generally lower than other control methods with the exception of mechanical collection. A wet scrubber may cost only 25% as much as an electrostatic precipitator. However, the operating and maintenance costs are much higher; as high as five times that for a precipitator.

Five general types of scrubbers are currently in use. Each has been fabricated in a variety of designs by a number of different manufacturers. Each type of wet scrubber is listed below.

- Venturi Scrubbers
- Spray Scrubbers
- Moving Bed Scrubbers
- Impingement Scrubbers
- Orifice Scrubbers

Sulfur Dioxide Control Technology

Sulfur dioxide (SO_2) is generated when the sulfur contained in coal is burned. Two general types of control which have been used over the past 50 years are wet and dry flue gas desulfurization (FGD) processes. The dry processes consist of a gas/solid contacting system where the SO_2 is absorbed by the solid matter. Dry lime/limestone injection, and adsorption on activated carbon, finely ground charcoal, coke and silica gel have all been tested and applied to boilers to varying degrees. The lime/limestone injection process has been applied to utility boilers but the process experienced major problems and has been retrofitted with a wet process. The dry adsorption processes are currently in a developmental stage and are not currently available for commercial application.

The wet FGD processes have had by far the greatest success in industrial boiler applications. Eight processes have been used on a commercial scale in the United States. In all of these processes, SO_2 is absorbed in a water slurry or solution and reacts to form sulfurous acid (H_2SO_3). This acid in turn is neutralized by an alkali contained in the system. All processes are classified into one of two categories, throwaway or regenerable. Throwaway processes generate a sulfite/sulfate waste product which must be disposed. The regenerable processes regenerate the alkali and produce one of many by-product sulfur compounds which can be marketed.

Throwaway Processes

Throwaway processes use an alkali to react with absorbed SO_2 and form a sulfite/sulfate waste product. The processes currently available are listed below.

- Lime Slurry Process
- Limestone Slurry Process
- Aqueous Sodium Process
- Aqueous Ammonia Process
- Double Alkali Process

Regenerable Processes

Regenerable processes also use an alkali to react with the absorbed SO_2. The resultant sulfite/sulfate slurry, however, is processed to regenerate the alkali for recycle back to the absorber and to produce sulfur containing by-products. Only two processes are currently available for commercial application, the magnesium oxide process and the Wellman-Lord process.

Scrubber Types

The scrubber is probably the most important component in wet FGD systems. Here the absorbent liquid or slurry is brought into contact with the flue gas. SO_2 in the flue gas is physically absorbed in the passing liquid. Chemical reactions may initiate in - the scrubber, although they frequently move to completion or equilibrium outside the scrubber.

Two major types of equipment can be used in FGD scrubber applications. One type can be used to remove particulates and sulfur dioxide simultaneously, while the other requires high efficiency particulate removal before the flue gas can be treated in the scrubber. Venturi, spray and moving bed scrubbers, described earlier under particulate control, also can be effectively used to absorb SO_2. Packed towers and tray columns tend to plug easily with the introduction of solids. For this reason highly efficient particulate removal devices must be included when considering packed or tray-type towers. Scrubber selections must be made on the basis of performance in the following areas:

- Absorption characteristics of the scrubber.
- Scaling experience of the system.
- Physical characteristics of the absorbing media.
- Physical properties and flow rate of the flue gas.

The five scrubber technologies currently most used in industry are as follows:

- Venturi Scrubbers
- Spray Scrubbers
- Moving Bed Scrubbers
- Packed Towers
- Tray Columns

Nitrogen Oxides Control Technology

Oxides of nitrogen are a major contributor to the total air pollution problem existing in industrial areas. Generally referred to as "NO_x", this gaseous pollutant class includes both nitric oxide (NO) and nitrogen dioxide (NO_2), although NO generally comprises only five percent or less of the total NO_x emissions from boilers.

Nitrogen oxide arises from the combustion of fuel-bound nitrogen and also from the fixation of atmospheric nitrogen in the combustion air. Not all of the fuel nitrogen is converted to NO_x. Typically, only 40% to 60% is converted, depending upon the coal type, fuel nitrogen content, firing conditions, and the structure of the nitrogen-containing molecules within the coal. Under certain conditions it could be important if the nitrogen-containing molecules are associated with the volatile fraction of the coal rather than the fixed carbon portion. The chemical oxidation state of the nitrogen species is important because nitrogen that is partially oxidized will be more easily converted to NO. The mechanism of formation of "fuel NO_x" is not well understood. There is some evidence that "fuel NO_x" can be reduced by lowering the available oxygen in the flame.

Atmospheric nitrogen enters the boiler system via the combustion air. At combustion temperatures ($\sim$ 3500°F) a small portion of this nitrogen is oxidized to form

what is commonly called "thermal NO_x". The formation of "thermal NO_x" cannot be prevented altogether, but a significant reduction can be accomplished by one of three general methods of combustion modification:

- Lowering the peak flame temperature.
- Reducing the availability of oxygen in the flame.
- Altering the residence time/temperature profile in the combustion zone.

Several processes have been developed to control NO_x by removing it from the flue gas or reducing it to nitrogen. These processes are not as economical as the combustion modifications, but in some applications they may be justified. The various methods which can be used to control nitrogen oxides, both combustion modifications and gas treatment processes, are discussed briefly below.

Combustion Modifications

Several methods can be used to alter the combustion system and thus reduce the NO_x concentration in the flue gas. As described above, these techniques are generally viewed to be effective as a result of lower peak flame temperatures, reduced availability of oxygen in the flame, or altered residence time/temperature profiles in the combustion zone. NO_x formation is a kinetically limited and highly temperature sensitive reaction. This, coupled with the fact that the source of the NO_x (fuel or thermal) in the flue gas cannot be determined, makes the selection of the proper combustion modification a very sensitive process. An example of its complexity is shown by the reduction of peak flame temperatures. This operation also effects the - temperature profile through the entire combustion path. However, the methods used also can affect the gas flow rate and thus the residence time. All of these factors affect the reaction kinetics, the rate of formation, and thus the concentration of NO_x in the flue gas.

When combustion modifications are employed to reduce nitrogen oxide emissions from industrial boilers, practical operating problems may arise, namely: fireside corrosion, deposits on boiler tubes, and flame instability—including blow-off, flash back, combustion-driven oscillations, and combustion noise or roar.

The design of the boiler and particular circumstances surrounding the installation all affect the feasibility of applying modifications to a specific boiler. A considerable variation of effectiveness, cost and practical difficulty will be experienced from one application to another. Table 2.2-11 provides an overview of the relative applicability of the combustion modifications as applied to firetube and watertube industrial boilers. The data in this table should not be interpreted in terms of relative effectiveness for NO_x reduction.

A brief discussion of the various methods for combustion modification and the effects on boiler operation caused by the application of these methods is included below.

Fuel Nitrogen Content. The nitrogen content of bituminous coals can vary from less than 0.8% up to 3.5%. EPA-funded tests indicate that a dependence of NO_x emissions upon coal nitrogen content, per se, does not exist. However, these tests did indicate that a high oxygen level in intimate contact with the fuel nitrogen may enhance the low temperature conversion of fuel nitrogen to NO_x. A major change in fuel nitrogen content and "fuel NO_x" may be encountered with a change from oil or natural gas to coal.

The effect of coal rank on fuel nitrogen conversion is largely unexplored. However, some recent data show that western subbituminous coals have about 15 to 20% lower NO_x emissions than eastern bituminous coals with comparable fuel nitrogen contents on a heat-value basis. The difference is believed due to the lower flame temperature associated with the lower heating values and higher moisture contents of the western coals.

It is apparent, from the above information, that coals with low nitrogen contents cannot be used to reduce NO_x emissions. However, a change in coal rank, from eastern bituminous to western subbituminous may effect a reduction in NO_x emissions. This however, is due primarily to factors other than fuel nitrogen content.

Low Excess Air Firing. Low excess air firing reduces the amount of excess air being fed to the combustion zone and thus reduces the oxygen available for fuel NO_x formation. The amount of combustion air also affects the peak flame temperature.

TABLE 2.2-11

APPLICATION OF COMBUSTION MODIFICATION TO VARIOUS TYPES OF BOILERS

Combustion Modification (a)	Firetube Stoker	Water Stoker	Watertube Pulverized Coal
Fuel Nitrogen Content	N/A	N/A	N/A
Low Excess Air Firing	N/A	N/A	●●
Staged Combustion (b)	●	●	●●
Biased Firing (c)	N/A	N/A	N/A
Combustion Air Temperature Reduction	●●	●●	●●
Flue Gas Recirculation	●●	●●	●●
Firing Rate Reduction	●●●	●●●	●●●
Burner Design	N/A	N/A	●●
Steam or Water Injection	●●●	●●●	●●●

NOTES:

(a) Applicability of combustion modification

●●● Modification is feasible for new boilers and for retrofit.

●● Modification is feasible for new boilers and for retrofit, but with considerable difficulty.

● Modification is feasible only for entirely new designs.

(b) Staged combustion includes use of No_x-ports downstream of fuel-rich burning zone.

(c) Only applicable for multiple burners.

Flame temperature increases as the excess air is decreased. This tends to negate somewhat the effects of the reduced oxygen content in the combustion zone. This method is the easiest of all combustion modifications to implement.

EPA-funded tests indicate that the reduction of excess air is more effective for coal fired boilers than for oil or gas fired boilers. NO_x in these tests was reduced by 50 to 60 ppm for each percent change in excess oxygen. However, these figures vary a great deal depending upon the initial level of excess air.

The amount of carbon monoxide (CO) in the flue gas is also affected by the oxygen content in the combustion zone. However, the CO content in the flue gas varies directly with the amount of excess air. Unburned hydrocarbons function in a similar manner. Consequently, low excess air firing requires additional monitoring equipment to optimize all emissions. The cost for this equipment, in most cases, can be offset by a fuel savings from a more efficient operation. A reduction in excess oxygen of 1% will result in an average efficiency improvement of approximately 0.5%.

A point may be reached where further reductions in excess air will result in flame instability. This limit will usually occur in the range of 2 to 5% excess O_2 for pulverized coal. Fireside deposits, corrosion and slagging may be a problem also.

Staged Combustion. Next to low excess air firing, staged combustion is the most effective combustion modification. In this process, some of the combustion air is diverted from the initial combustion zone at the burner and injected into the combustion zone farther downflame. The injection points are usually called "overfire ports", "sidefire ports" or "NO_x ports" depending upon the location. This modification causes the combustion process to be fuel rich initially, and slows combustion in the initial combustion zone. The injection of cool combustion air downflame allows for complete combustion and cools the flue gas below the nitrogen oxides formation temperature of 3300°F more rapidly. This control method is inexpensive and effective, but fireside deposits, corrosion, and slagging may create problems in the combustion zone.

Nitrogen oxide emissions have been reduced by as much as 47% with this technique. In most cases, however, the boiler efficiency is decreased by up to one percentage point, and in some instances, by as much as three percentage points. Efficiency drops because more air is required overall, through the combination of the burner and the overfire ports, than was required through the burner alone. This results in more hot air being exhausted up the stack, and a corresponding decrease in the boiler efficiency.

In addition to limiting the formation of thermally generated nitrogen oxides, staged combustion also reduces the conversion of fuel-bound nitrogen to nitrogen oxides. The mechanism for the fuel-bound nitrogen conversion is not highly temperature sensitive, so a combustion modification which reduces only the bulk gas temperature will not greatly limit the conversion. Staged firing, however, reduces the available oxygen in the combustion zone near the burner, and is effective in limiting the conversion of fuel-bound nitrogen.

Biased Firing. Biased firing is an economical method of implementing staged combustion. In this process, the fuel is shut off to one or more burners while the air flow is maintained at the same rate. The technique can be applied only to multiple burner furnaces and cannot be used on stoker fired boilers. The major difficulty in applying this procedure is in selecting the best burner to turn off and the best settings of excess O_2, air register, etc. which will allow satisfactory operation at reduced NO_x levels without smoke or carbon monoxide formation. In some cases, taking burners out of service forces the unit to a lower load because the fuel system on the remaining in-service burners cannot handle the increased fuel flow necessary to maintain full load. Biased firing is seldom more effective than low excess air with all burners in service.

With a burner out of service, the total nitrogen oxide emissions have been reduced up to 54%. An advantage of this type of combustion modification is that the boiler efficiency is relatively unaffected. However, fireside deposits, corrosion and slagging may be a problem.

Combustion Air Temperature Reduction. This method reduces the preheating of combustion air to lower the combustion zone temperature profile. Nitrogen oxide emissions can be reduced up to 32%, but it also results in a lower boiler efficiency.

The level of combustion air preheat has a direct effect on the temperatures in the combustion zone. For example a 90°F decrease in air temperature results in approximately a 45°F reduction in the adiabatic flame temperature, thus having a direct impact on the formation of thermal NO_x. Since the air preheat temperature primarily affects thermal NO_x formation, it will have the greatest effect, in terms of percent change, on fuels with low fuel nitrogen contents (oil & gas).

Reducing the air preheat temperature results in a higher flue gas temperature exiting the preheater, reducing boiler efficiency approximately 2.5% per 95°F increase in the stack temperature. The boiler efficiency can be increased to offset this loss if a larger economizer is provided to recover the waste heat.

One source indicates that combustion air temperature reduction may be effective on coal fired boilers operating at high excess air levels. However, in this situation, low excess air firing may provide better performance than combustion air temperature reduction. For this reason and because of the large efficiency penalties, combustion air temperature reduction should be considered only as a last-resort.

Flue Gas Recirculation. Flue gas recirculation has been successful in reducing the total nitrogen oxides concentration in flue gases by 10 to 40%, especially with pulverized coal boilers. The only effect on boiler efficiency is the work required in the recirculation fan, which is negligible. Recirculation of flue gas into the combustion zone reduces the flame temperature, and thus the formation of thermal NO_x. Coal and oil fired applications are not as responsive to this method as natural gas, probably due to the high fuel nitrogen contents. However, the lower oxygen concentration in the combustion gases also may reduce the formation of fuel NO_x. Flue gas recycle to secondary air in pulverized coal boilers has resulted in reductions in NO_x concentrations up to 30%. The recirculated rate corresponding to this reduction was 30%.

The method or location of injecting the flue gas is important. There are several methods for adding flue gas to the burner. It can be mixed with the combustion air, or a separate passage can be provided.

The type of boiler influences the effect of flue gas recirculation on NO_x. In some boilers, the technique may be uneconomical for large NO_x reductions. In some cases,

capital cost may be high. This combustion modification is best applied to large, new boilers.

Firing Rate Reduction. This procedure calls for a reduction in the firing rate and a reduction in the steam output of the boiler. In most cases this reduction in load, at a given level of excess air, reduces the total amount of NO_x being formed per pound of steam generated. Problems arise when the boiler operational procedures call for an increase in the amount of excess air at lower firing rates. This frequently happens, and the excess air in the combustion zone increases the formation of NO_x. As a result, some applications of this technique have been found to reduce NO_x emissions by 25%, while in other applications the NO_x is increased by the same amount, depending upon the operational procedures. A similar effect can be achieved by oversizing the combustion zone. However, the capital costs for including unused furnace capacity may be prohibitive. In general, a reduction in the firing rate can be an effective method for controlling NO_x in plants where the boiler has been oversized to handle peak loads or future growth.

Burner Design and Tuneup. Some boiler types have shown an ability to emit less nitrogen oxides than other types. Spreader stokers, pulverized coal burners, and cyclone burners have the highest level of NO_x emissions. Chain grate and underfired stokers have the lowest. This may be a result of the lower flame intensity and larger furnace volume commonly associated with the latter group.

Burner size is also a major factor in the quantity of NO_x emitted from a boiler. In general, NO_x emission rates are higher with increased burner sizes. This would suggest that one form of combustion modification would be to use several smaller burners rather than one large one. This is generally true for both pulverized coal burners and cyclone furnaces.

A burner, once in operation, must be properly maintained to ensure optimum efficiency and low NO_x formation. Burner maintenance or tuneup consists of adjusting the excess air to the proper level for each load, adjusting the burner registers to give a hard, bright flame and replacing worn parts in the burner itself. The major objective in burner tuneup is to alter the fuel and air mixing patterns to provide as much

aerodynamically staged mixing as possible without additional air injection downflame. The low-NO_x configuration that one hopes to achieve is a long, narrow flame where the fuel and air mix gradually over the entire flame length. Such flames can be achieved by reducing the swirl of the secondary air and by changing the angle at which the fuel is injected into the secondary air stream. In the normal operating range of a burner with variable air swirl, decreasing the swirl usually decreases NO_x.

At very high swirl settings, NO_x may again decrease if the flame changes to a widely flaring shape which is more effectively cooled by the walls and by entrainment of cooled combustion products from within the furnace.

Improvements in thermal efficiency as well as reduced pollutant emissions can be obtained economically by proper maintenance of the burner if, for example, the overall excess O_2 can be lowered by improved fuel/air mixing. New burner designs are available which advertise low emissions as well as versatile operation. These new designs should be considered when a unit retrofit is anticipated.

Steam or Water Injection. In this combustion modification steam or water is injected into preheated combustion air. It can be thought of as a simpler alternative to flue gas recirculation and can be applied to any type of industrial boiler. To be effective in reducing NO_x, the water must be evaporated before passing through the flame. Steam or water injection reduces NO_x formation by reducing the peak flame temperature, and by diluting the oxygen concentration in the combustion zone. The major disadvantage is the high stack gas heat loss associated with water injection. The dilution effect can be enhanced with less loss in thermal efficiency if waste steam is used. Neither injection process can be used to control fuel NO_x. This method has been used on several boilers, but normally it is considered unacceptable because of the associated efficiency loss.

Gas Treatment Processes

Removal of nitrogen oxides from boiler flue gas is considerably more difficult than preventing their formation by combustion modifications. Several problems are inherent in this type of system. They are:

- A large amount of gas must be handled.
- The NO_x is present in dilute concentrations.
- Other pollutants may interfere with the process.
- High power consumptions may be encountered.

In Japan, where the NO_x problem is greater, a considerable amount of attention has been given to the development of NO_x removal processes. This is due primarily to the stringent standards imposed on industries there. In most cases, combustion modifications adequately reduce NO_x emissions to meet current regulations in this country.

Control Of Ash Handling Emissions

Ash handling emissions consist of water effluents, fugitive emissions and the ash itself.

Solid Wastes

Solid waste from the ash handling area, comprised mainly of ash, must be disposed of in an environmentally acceptable manner. Dry ash from the ash hopper in the boiler can be combined with fly ash from dry particulate control devices (e.g. cyclones, electrostatic precipitators, etc.), and sent to a landfill for disposal. Due to a shortage of landfill sites, ash has been used in a number of ways to eliminate the need for disposal. Methods of ash utilization were described in the particulate control section.

Molten ash from a slag-tap furnace must be cooled in water to solidify the ash and to reduce the temperature for transport. Once the slag is contacted with water, it breaks up into discrete particles. Steam generated from the cooling process will contain any volatile matter originally present in the ash quench water. Depending on the quality of the water, this effluent could create environmental problems if discharged without treatment.

The solidified slag can be dewatered and transported to a landfill by truck or conveyor, or it can be used in a manner similar to dry ash. Alternatively the slag can be transported hydraulically to an ash pond. The pond can be used for ultimate disposal

or the ash can be dredged and sent to a landfill. This method eliminates the need for - expensive equipment required to dewater the ash slurry. Fly ash from wet particulate scrubbers can be handled in a similar manner.

Fugitive Emissions

Fugitive air emissions consist of gaseous and particulate pollutants which are released in small quantities from the plant in general, and not from specific uniform openings within the plant. Most fugitive dust emissions generated from the handling of fine, dry ash can be controlled by the use of enclosures to contain the dust or by water sprays to collect and/or agglomerate the fine particles. Fugitive emissions from the landfill area can be controlled by water sprays to hold down dust, or by spraying the surface with chemicals to form a coating which resists wind erosion. Other methods include covering the site with a daily earth cover, revegetating the area, or using shrubs and other plants as windbreaks.

Fugitive liquid emissions arise from leaks around pumps, piping, and other process equipment. In addition, ponds and spills in and around the plant can allow liquid to migrate into the groundwater. Ash quench water or transport water can be effectively contained in the ash pond by lining the pond with any one of a number plastic liners, clay liners or other bulk materials such as asphalt or concrete. Leaks from process equipment can be controlled by good maintenance practices or by collecting and recycling the effluent.

Liquid Effluents

The major effluent from the ash handling area is the water used for ash quenching and/or transport. The flow rate of this effluent can be high depending on the quantity of ash. The quality of this water can also vary a great deal because of the variation in coal ash properties. In most plants this stream is recycled from a settling pond or clarifier, and reused in the ash handling system. Some coals have such a variation between the fly ash and bottom ash properties that separate transport systems are needed. Discharges from other areas of the plant also are disposed of in the ash handling recycle system. If the flow of these streams is small, a closed system (zero discharge) can be implemented. When the volume of the inputs exceeds evaporation and

other water losses, the effluent from the system will have to be treated, in most cases, to meet EPA regulations. This may involve chemical treatment in a clarifier to remove suspended solids and to precipitate some of the chemical constituents. Cooling may be required also, prior to discharge.

Control of Other Emissions

Emissions which cannot be classified as ash handling or combustion emissions are considered in this section. These emissions include: fugitive emissions from coal handling; cooling tower drift; liquid effluents from scrubbers, cooling towers, and ion exchange regeneration; boiler blowdown; and solid wastes from flue gas desulfurization processes.

Solid Wastes

Several throwaway flue gas desulfirization (FGD) processes generate solid wastes containing varying amounts of calcium sulfate ($CaSO_4$), calcium sulfite ($CaSO_3$), fly ash (up to 70% dry weight), scrubbing liquor (typically 30-60%), and a small amount of unreacted lime or limestone. The physical characteristics of this sludge can vary a great deal. Some sludges in the form of a slurry can be disposed of in a pond. Others appear to be a dry solid, but after a rain storm or upon shaking, these sludges can become fluid. Because of this, sludges from lime and limestone scrubbing systems must be stablized or "fixed" to give them good, long term mechanical properties and to improve their resistance to chemical leaching. Several methods have been developed to eliminate the physical problems encountered with these sludges.

As described above, the first option is ponding. Sludge in the form of slurry or near dry solids can be sent to lined disposal ponds to contain the leachate and allow the solids to settle while the water evaporates. Experience shows, however, that this method results in ponds that appear dry, but may at any time liquefy and behave like quicksand. The solids do not compact themselves, leaving a hazard that must be monitored indefinitely.

Sludges can also be dewatered and sent to a landfill. However, the sludges can exhibit thixotropic properties within the landfill as well, and in wet conditions they can

form a mud or slurry with poor mechanical properties. Soluble matter in the sludge also can be leached from the landfill.

Physical stabilization is the third option. Dewatered sludge may be mixed with a dry material such as fly ash and transported to a landfill. This process brings the sludge to a state where it is non-thixotropic and nonplastic; but due to a non-rigid matrix these properties can return if water infiltrates the landfill. Leaching may still be a problem in this system.

Proprietary fixation processes have been developed by a number of companies to stablize the sludge physically and chemically. In these processes a pozzolanic additive is used to form a solid matrix with physical properties which will not change with water inflow, shaking or time. Certain fly ashes can be used as the additive if aluminate and silicate are present. These compounds react with the alkali sludge to form the cement-like matrix. A variety of other additives can be used to enhance the process. The sludge in its final form will have low permeability, good mechanical properties, and will not degrade with time. Costs for the systems described all increase with the complexity of the process.

Fugitive Emissions

Fugitive emissions from coal handling are similar to those from the handling of ash. A certain amount of fine coal particles may be entrained in the air when coal is dumped, transferred from belt to belt or from coal storage. Water sprays, chemical sprays or enclosures equipped with dust removal equipment can be effective in controlling this dust.

Runoff from the coal storage area contains a variety of chemicals leached from the coal itself. The major constitutent, sulfuric acid, is generated when pyritic sulfur is oxidized by the dissolved oxygen in rain. In general, this runoff is combined with other waste effluents and sent to a recycle basin. The water is later reused within the plant.

Liquid Effluents

Several processes within a steam plant generate liquid wastes of varying quality. These waste streams include boiler blowdown, cooling tower blowdown, ion exchange

regeneration liquor, boiler cleaning waste streams and a variety of other insignificant waste streams. Most plants recycle these streams to other areas of the plant using the - cleanest streams in areas which require relative clean makeup and the dirtiest streams in the ash transport recycle system.

A major contributor to the liquid effluent from the plant is the flue gas desulfurization system. Many FGD processes generate small, concentrated bleed streams to limit chemical buildup in the scrubber. Others use a once-through process and generate a massive quantity of liquid to be treated or disposed of. Each process is different, but small bleed streams generally can be reused in the plant waste water system. With the aqueous sodium process and the aqueous ammonia process, the high flow rates prohibit using these wastes in the plant recycle system, and a separate treatment system must be provided. The treatment varies from system to system and was partly described in the discussion of individual FGD processes.

COAL ALTERNATIVE FOR ALPETCO REFINERY

This sub-section presents a preliminary design and cost estimate for utilizing coal as a fuel source for the ALPETCO refinery. Direct coal combustion for the ALPETCO refinery is applicable only in steam and power generation due to the fact that technology for combustion of coal in process heaters has not been demonstrated.

For the ALPETCO refinery the preliminary design of the coal-fired steam and power system is based on a net process steam requirement of 270,000 lb/hr of 150 and 50 psig steam and 51,671 KW of electrical demand. The boilers are designed to produce 650 psig, 680¼F steam at a total steam rate of 800,000 lb/hr, utilizing 1268 TPD of coal. Approximately 270,000 lb/hr of steam are initially sent to a steam topping turbine with exhaust conditions of 150 psig, 360¼F. The exhaust steam is sent to the refinery for process use. The topping turbine will produce 8,544 KW of electricity. The remaining 43,127 KW is produced by running 530,000 lb/hr of steam through a condensing turbine. To assure reliability, the boiler system will include three 400,000 lb/hr boilers thus providing 50% spare capacity. This will allow periodic shutdown of individual boilers for inspection and maintenance while maintaining design steam load. The coal boiler and turbine systems are shown in Figure 2.2-6.

The coal handling system (itemized in Table 2.2-12) for the boilers will involve barge unloading facilities, a minimum 45 day coal inventory storage pile, a reclaim system, coal crushers for sizing, silos and bunkers for working storage, feeders and conveyors, and finally pulverizers to reduce the coal to 70% through 200 mesh before entering the burners.

In addition to the boiler and coal handling and feeding system a particulate and sulfur removal system is also included. A typical process flow diagram[10] for pulverized coal boiler, electrostatic precipitator and flue gas desulfurization system is shown in Figure 2.2-7. The equipment required for this setup, as marked in Figure 2.2-7, includes:

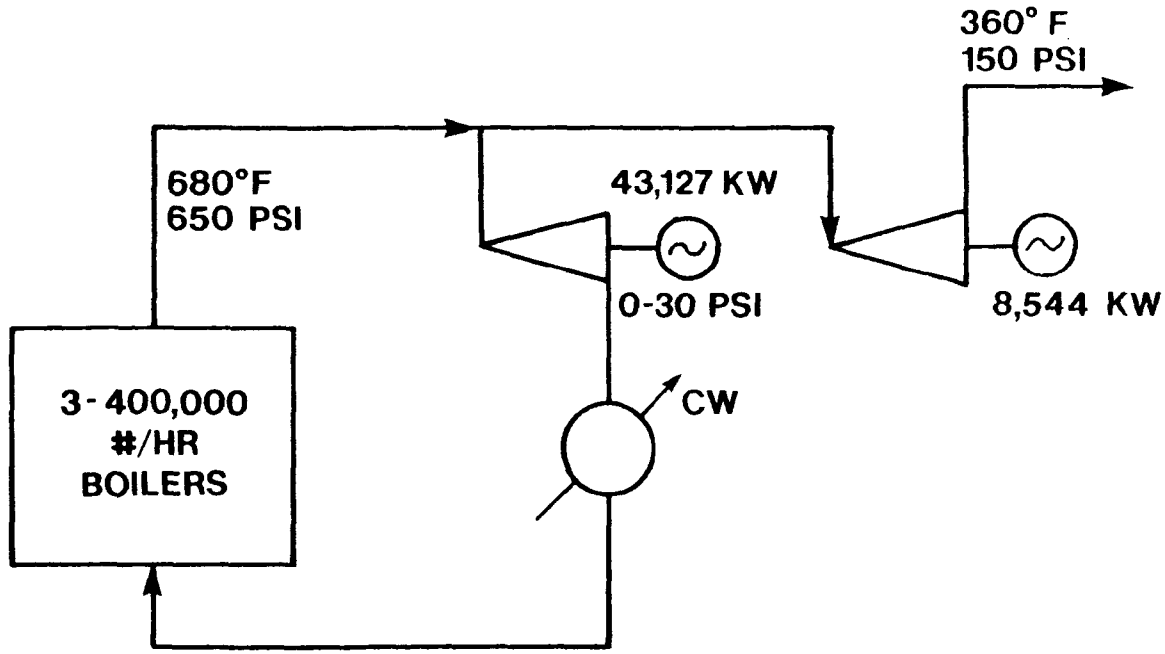

FIGURE 2.2-6

CONCEPTUAL ALPETCO

BOILER/TURBINE CONFIGURATION

TABLE 2.2-12

EQUIPMENT FOR COAL HANDLING SYSTEM

ITEM	COST*
Coal Crusher	$ 148,520
Dust Collection Blowers	212,440
Magnetic Separator	52,640
Coal Screen	63,920
Coal Dust Filters	33,840
Unloading Dust Filters	33,840
Unloading Hopper Conveyor	63,920
Elevator Feed Conveyor From Unloading	212,440
Coal Elevator	105,280
Silo Feed Conveyor	159,800
Silo Discharge Conveyor	84,600
Vibratory Feeder	52,640
Coal Unloading Hopper	84,600
Coal Feed Surge Hoppers	41,360
Pulverizers	530,160
Total	$1,880,000

* 1979 Dollars

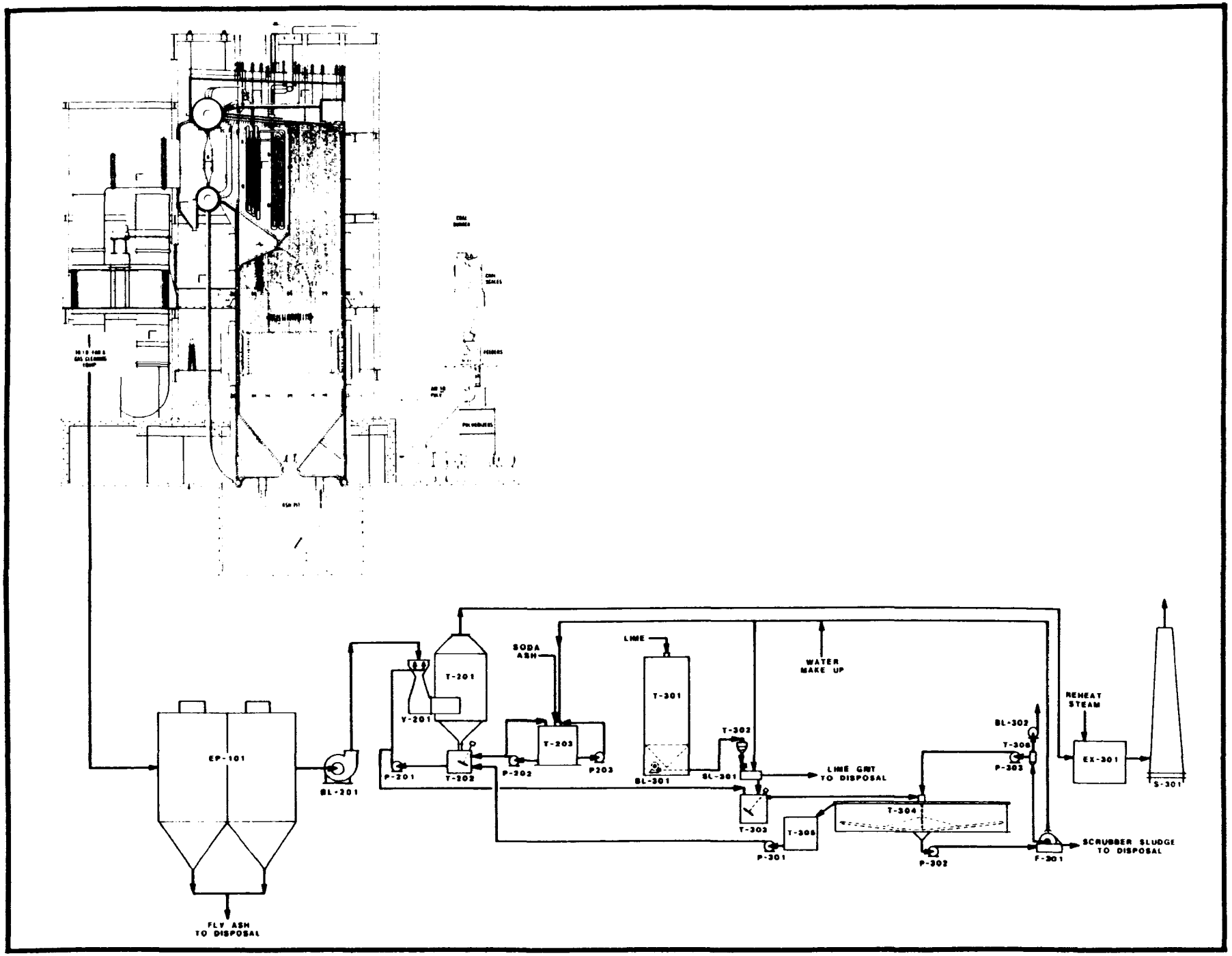

FIGURE 2.2-7

TYPICAL PROCESS FLOW DIAGRAM FOR A PULVERIZED COAL FIRED BOILER

- M-101 pulverizing mill
- BL-101 primary air blower
- B-101 boiler
- EP-101 electrostatic precipitator
- BL-201 blower
- V-201 venturi
- T-201 separator
- T-202 recirculation tank
- P-201 recirculation pump
- T-203 slurry mixer
- P-202 soda ash transfer pump
- P-203 soda ash hydration pump
- T-301 lime storage bin
- BL-301 lime transfer blower
- T-302 lime use bin
- SL-301 slaker
- T-303 lime reactor tank
- T-304 thickener
- T-305 regeneration surge tank
- P-301 regeneration return pump
- P-302 thickener underflow pump
- F-301 rotary drum filter
- BL-302 vacuum pump
- P-303 filtrate pump
- T-506 filtrate receiver
- EX-301 reheater
- S-301 stack

Capital costs for the coal-fired steam and power system including the flue gas desulfurization system are given in Table 2.2-13.

System operating costs are given in Table 2.2-14. Direct labor manpower estimates are based on past experience, with four men per shift per boiler being standard practice. Electrical power requirements were charged out at 2.5¢/KWH even though the refinery generates its own power. Treated boiler feed water costs $.35/1000 gallons. Boiler maintenance costs were set at $0.40/ton of coal burned.

Emissions from the coal boiler/power system are presented in Table 2.2-15. The NO_x uncontrolled emission estimates are based on emission factors published by the Environmental Protection Agency in publication AP-42[9]. The controlled emission estimates are based on the recently released New Source Performance Standards for Coal-Fired Utility Power Plants. These emission standards are as follows:

- SO_2 - 70 percent reduction in potential emissions for coals that emit less than 0.60 lb/million BTU when burned with no control

TABLE 2.2-13

CAPITAL COST ESTIMATE FOR COAL-FIRED STEAM AND POWER SYSTEM*

Boilers		$21,000,000
Installation Labor		10,500,000
Balance of Plant		
Dearators	164,400	
Boiler Feed Pump & Drivers	152,700	
Boiler Chemical Treatment	53,100	
Foundations	55,800	
Earthwork & Grading	206,700	
Revetments Sumps & Culverts	516,900	
Control Room	1,200,000	
Electrical Cabling, Switchgear	435,400	
Silos & Bunkers	139,800	
Coal Handling	1,880,000	
Waste Disposal	313,400	
Water Treatment	2,923,200	
Reheaters	153,000	
Subtotal, Balance of Plant		8,194,400
Turbines		
8.5 MW		1,020,000
43.0 MW		4,370,000
Installation Labor		2,200,000
Foundations, Controls, Auxiliary		1,078,000
Total Direct Cost		48,362,400
Contingency (10%)		4,836,200
Engineering (10%)		4,836,200
FGD Systems		7,584,000
TOTAL SYSTEM COST		$65,618,800

* Basis:
1. 3 - 400,000 Lb/Hr Boilers and
2. 1979 Dollars

TABLE 2.2-14

OPERATING COST ESTIMATE FOR COAL-FIRED STEAM AND POWER SYSTEM

Raw Materials	Annual Cost*
Fuel @$ 29.26/ton	$13,542,100
Soda Ash @$ 55.00/ton	66,500
Lime @$ 33.00/ton	360,000
	$13,968,600
Salaries & Wages	
Direct Labor 4 Men/Shift/Boiler	811,400
Administration & Overhead (20% of Direct Labor)	162,200
	$ 973,600
Utilities	
Power	
- Coal Handling	24,800
- Boiler Operation	409,200
- Feed Water Pump	203,800
- FGD System	564,200
Water	
- Scrubber Makeup	2,600
- Boiler Makeup	84,700
	$ 1,289,300
Maintenance	
Boiler	177,500
FGD & Other	432,400
	$ 609,900
Taxes & Insurance	1,312,400
Depreciation (St. Line 23 Yr. Taxable Life)	2,853,000
Total Operating Cost	$21,006,800

Basis:

1. Operating 2 - 400,000 Lb/Hr Boilers
2. 1979 Dollars

TABLE 2.2-15

EMISSION ESTIMATES, ALPETCO COAL FIRED BOILER INSTALLATION

	Air Emissions, lbs/Day				
	Particulates	SO_x	CO	HC	NO_x
No Control	215,560	9,636	1,268	380	22,864
Controlled	646	674	1,268	380	10,778

Solid & Liquid Waste, lbs/Day			
Ash		Scrubber Sludge	
Bottom	Fly Ash	Solids	Liquids
38,040	214,914	552,340	451,915

- Particulate Matter - 0.03 lb/million BTU
- NO_x - 0.50 lb/million BTU

The solid/liquid effluent rates are based on:

- Ash - 15% bottom ash; 85% fly ash, 99.7% removal of fly ash.
- Scrubber Sludge - 55% solids, including lime grit

These estimates compare with the estimates for the ALPETCO gas fired steam and power system as indicated in Table 2.2-16.

TABLE 2.2-16

ALPETCO EMISSION ESTIMATE COMPARISON
FUEL GAS/COAL STEAM AND POWER FACILITY

(Tons/Year)

	SO_2	NO_x	CO	HC	Particulate
Fuel Gas	165	929	98	17	58
Coal	123	1967	231	69	117

References

(1) Sanders, R.B., "Coal Resources of Alaska," Proceedings of the Conference, Focus on Alaska's Coal '75, University of Alaska, Fairbanks, October 15-17, 1975, pg. 24.

(2) Conwell, C.N., 1977 Keystone Coal Industry Manual, McGraw-Hill 1977, Pg. 568, (ALASKA)

(3) Patsch, Benno J.G., "Exploration and Development of the Beluga Coal Field," Proceedings of the Conference, Focus on Alaska's Coal '75, University of Alaska, Fairbanks, October 15-17, 1975, pg. 76.

(4) Barnes, F.F., Coal Resources of Alaska, U.S. Geological Survey Bulletin 1242-B, 1967, pp. 1-36.

(5) Cornwell, C.N., "Land Reclamation Is An Integral Part of the Only Operating Coald Mine In Alaska," The Coal Miner, September 1977, pp. 21-29.

(6) Usibelli, Jr., "Mining Constraints and Operations at Usibelli Coal Mine," Proceedings of the Conference, Focus on Alaska's Coal '75, University of Alaska, Fairbanks, October 15-17, 1975, pp. 93-99.

(7) Bottge, R., "Changing Economics of Alaskan Coals," University of Alaska, Fairbanks, October 15-17, 1975, pp. 139-149.

(8) Verbal Communication with Crowley Maritime, Inc.

(9) U.S. Environmental Protection Agency, "Compilication of Air Pollutant Emission Factors - Second Edition", AP-42, February 1976.

(10) Cameron Engineers, Inc., "Solid Fuels For U.S. Industry, An Engineering, Economic and Market Study of Coal to 1990", March 1979.

THE PACE COMPANY CONSULTANTS & ENGINEERS, INC. 5251 WESTHEIMER
P.O. BOX 53473 HOUSTON, TEXAS 77052 AC 713 965-0311 CABLE: PACECO-HOUSTON TELEX 77-4350

EVALUATION OF REFINERY BY-PRODUCT GAS AS AN ENERGY SOURCE

EVALUATION OF REFINERY BY-PRODUCT GAS AS AN ENERGY SOURCE

Refinery by-product gas, which primarily consists of the light, non-condensable gases produced from various processing operations, has been a major contributor to the refinery fuel systems and has been used to displace natural gas burned in process applications. Modern heater designs have evolved over the years based on burning gaseous fuels, and are efficient units with a high degree of heat control necessary for high temperature process heating.

HEATER TECHNOLOGY

Fired heaters include a number of devices in which heat liberated by the combustion of fuel within an internally insulated enclosure is transferred to fluid contained in tubular coils. Typically, the tubes are installed along the walls and roof of the combustion chamber where heat transfer occurs primarily by radiation and a separate tube bank where heat is transferred by convection. Industry identifies these heaters with such names as process heater, furnace, process furnace and direct fired heater, all of which are interchangeable.

The fundamental function of a fired heater is to supply a specified quantity of heat at elevated temperature levels to the fluid being heated. It must be able to do so without localized overheating of the fluid or the heater structural components.

Fired heater size is defined in terms of its design heat absorption capability, or duty. Duties range from about a half-million BTU/hr for small units to about one billion BTU/hr for large facilities associated with steam-hydrocarbon-reformer heaters. However, the majority of fired-heater installations fall within the 10 to 350 million BTU/hr range.

Process industry requirements for fired heaters are divided into a half-dozen general service categories:

- Column reboilers (general heating service)
- Fractionating - column feed preheaters
- Reactor-fired preheaters (high temperature service)

- Heat supplied to a heat-transfer media
- Heat supplied to viscous fluids (pumping and transfer requirements)
- Fired reactors

Design

There are many variations in the layout, design and construction of fired heaters. The principal classification relates to the orientation of the heating coil in the radiant section, that is whether the tubes are horizontal or vertical.

There are twelve different configurations currently used in the process industries. The classification, layout and normal heating duty range for the most popular type are discussed below.

Vertical-Cylindrical, All Radiant

In this design, the tube coil is placed vertically along the walls of the combustion chamber. Firing is vertical, from the floor of the heater. Typical duties are 0.5 to 20 million BTU/hr. This type is generally low cost, but also has a low thermal efficiency.

Vertical-Cylindrical, Helical Coil

In these units the coil is arranged helically along the walls of the combustion chamber, and firing is vertical from the floor. This design also represents low cost, and low efficiency, however, one limitation on these units is that generally only one flow path is followed by the process fluid. Heating duties range from 0.5 to 20 million BTU/hr.

Vertical-Cylindrical, With Crossflow Convection

These heaters feature both radiant and convection sections. The radiant section tube coil is in a vertical arrangement along the walls of the combustion chamber. The convection section tube coil is arranged as a horizontal bank of tubes positioned above the combustion chamber.

This configuration provides an economical, high efficiency design. The majority of new vertical-tube fired heater installations fall into this category. Typical heat duty range is 10 to 200 million BTU/hr.

Arbor or Wicket

This is a specialty design in which the radiant heating surface is provided by U-Tubes connecting the inlet and outlet terminal manifolds. This type is especially suited for heating large flows of gas under conditions of low pressure drop. Typical applications in petroleum refining are in catalytic-reformer charge heaters and in various reheat service. Firing modes are usually vertical from the floor. Typical heat duties range from 50 to 100 million BTU/hr.

Vertical Tube - Double Fired

In these units vertical radiant tubes are arranged in a single row in each combustion cell (usually two cells) and are fired from both sides of the row. Such an arrangement yields a highly uniform distribution of heat transfer rates about the tube circumference. A variation of these heaters uses multilevel side-wall firing. These units are often used in fired reactor service and in critical reactor feed heating services. Heat duty range for each cell is between 20 and 125 million BTU/hr.

Horizontal Tube Cabin

The radiant section tube coils of these heaters are arranged horizontally so as to line the sidewalls of the combustion chamber and the sloping roof. The convection section tube coils are positioned horizontally above the combustion chamber. Normally,

these tubes are fired vertically from the floor, but they can also be fired horizontally by sidewall mounted burners. These heaters represent the majority of new horizontal tube heater installations. Duties run 10 to 100 million BTU/hr.

AIR SUPPLY AND FLUE GAS REMOVAL

Besides the major classifications according to service and configuration, fired heaters can also be grouped according to their methods of combustion air and flue gas removal.

The capability for inducing the flow of combustion air into a fired heater exists when hot flue gas of relatively low density is confined in a structure and isolated from higher-density air at ambient temperature. The buoyancy of the hot flue gas contained in the fired heater creates "draft" (less than atmospheric pressure), which induces flow of air into the combustion chamber. Since this draft results from a natural stack effect, it is termed natural draft. The majority of fired-heater installations are such natural-draft types, where a stack effect introduces the combustion air and removes the flue gas.

Obstruction to the flow of flue gas through a fired heater can result in a condition of pressure greater than atmospheric (positive pressure) in the structure. It is the function of the stack in a natural-draft heater to generate draft sufficient to overcome such obstructions and to maintain a negative pressure throughout.

An induced-draft fired heater incorporates an induced-draft fan, in lieu of a stack, to maintain a negative pressure and to induce the flow of combustion air and the removal of flue gas.

In forced-draft fired heater combustion air is supplied under positive pressure by means of a forced-draft fan. It is to be noted that even with air supplied under positive pressure, the combustion chamber and all other parts of the fired heater are maintained under negative pressure, and the flue gas is removed by the stack effect.

A forced-draft/induced-draft heater uses a forced-draft fan to supply combustion air under positive pressure; an induced-draft fan maintains the combustion chamber and all other parts of the fired heater under negative pressure and removes the flue gas.

Most fired heaters equipped with air preheaters are of the forced-draft/induced-draft type. The specific design of any of the previously mentioned heaters utilizing gaseous fuels is based on a number of factors:

- heater service
- heat duty
- BTU value of the fuel gas
- contaminants contained in the fuel gas

The state-of-the-art in design of gas fired heaters whether on natural gas or refinery by-product gas is well developed. The burner requirements, excess air fuel volume and furnace volumes are all fixed by the heat duty, and fuel heating value. Stack temperatures and heat load on the convection section are set in many instances by contaminants which may be contained in the fuel and ultimately in the flue gas. Low temperatures promote corrosion and fouling of tubes and stack due to condensing and reaction of contaminants. The effect on stack gas dew point is a critical parameter.

In general, all heaters used in refinery service and all by-product gas produced in refinery operations are compatible. There are no major difficulties in utilizing refinery gas and in fact is the preferred method used to supply fuel for process heat.

BY-PRODUCT GAS AVAILABILITY AND USE IN THE ALPETCO REFINERY

By-product gas produced from refinery operations consists of non-condensable gases comprised primarily of methane, ethane, and propane. These gases are produced from crude distillation, cracking, reforming, and other thermal processes. The amount and source of these gases available for refinery fuel depends on the actual processing configuration used in the refinery.

At the Alpetco refinery, fuel gas will be produced in a number of units and treated and processed in gas cleaning units before being added to the fuel system. The primary sources of the C_2 and lighter fuel gases include:

- Distillate hydrocracker
- Gas Oil Hydrotreater
- Fluid Catalytic Cracker
- Naphtha Hydrotreater

Propane is also used in the refinery fuel system. However, a portion of the propane production is used for the manufacture of hydrogen. Primary sources of propane include:

- Distillate hydrocracker
- HF Alkylation
- Fluid Catalytic Cracker light ends

An additional source of gaseous fuel at Alpetco will be low (130 BTU/SCF) BTU gas produced from coke via gasification. Vacuum tower bottoms, a heavy high melting point material will be sent to a flexicoker, where the stream will be coked and the resulting coke gasified to produce the low BTU gas. This gas stream is treated for removal of particulates and sulfur compounds and added to the fuel system.

The combination of the methane, ethane, propane and low BTU gas results in a refinery fuel mix with a heating value of 407 BTU/SCF. These gases represent 97 percent of the total refinery energy demand as shown in Table 2.3-1.

TABLE 2.3.1

REFINERY FUEL GAS SOURCES

Description	Quantity MMBTU/D
Fuel Gas	48,372
Flexicoker Low-BTU Gas	20,496
Propane	10,115
Total	78,983

Refinery by-product gas is a reliable fuel source since it is always available when the refinery is operating. The use of this gas as fuel is the most logical disposition of these streams since there is currently no market for LPG near the Alpetco facility and the recovery and purification of methane and ethane would not be economically viable.

ENVIRONMENTAL CONSIDERATIONS

The combustion of by-product gas generates five major pollutants of concern: SO_2, NO_x, CO, particulates, and non-methane hydrocarbons. Currently SO_2 resulting from the combustion of H_2S in fuel gas is regulated and is limited to 0.10 gr H_2S DSCF. The other major pollutants must be limited in order to meet National Ambient Air Quality Standards (NAAQS) and Prevention of Significant Deterioration regulations. (See Section 3.4.3)

Valdez is classified by the EPA as a Class II area and is an attainment area for all the above-mentioned pollutants. This means that current discharge of emissions in the Valdez area is below maximum allowable concentrations specified for Class II areas.

Of the five pollutants, there are precombusion controls for two: sulfur and particulates. Light gases produced in refinery operations generally contain considerable amounts of H_2S which can be removed in amine gas scrubbing systems. This system has been used in refinery operations for many years and is reliable. Concentrations of H_2S can be reduced to levels well within standards for sulfur emissions.

Particulates are not a problem in refinery gases. However, at the Alpetco facility, the low BTU gas produced in the flexicoking operation will contain significant amounts of particulates. These particulates are removed by either water or oil scrubbing before introduction into the fuel system. NO_x formation cannot be controlled prior to combustion but various modifications to firing operations can be made to reduce NO_x.

NO_x arises from the combustion of fuel bound nitrogen and also from the fixation of atmospheric nitrogen in the combustion air. Fuel bound nitrogen in low BTU gas is generally in the form of ammonia, but as in many refinery fuel gases, it is not predominate. Control of the formation of NO_x from the fixation of atmospheric nitrogen is usually accomplished by combustion modifications which:

- Lower the peak flame temperature.
- Reduce the availability of oxygen in the flame.
- Alter the residence time/temperature profile in the combustion zone.

Carbon monoxide and non-methane hydrocarbon are formed from inefficient combustion of the fuel. This coupled with the complex dependence the above factors have on each other, creates a requirement for proper design and precise adjustment of a combustion system to minimize the production of NO_x, CO, and non-methane hydrocarbons.

Specific control technology planned for the Alpetco refinery is discussed in Section 3.4.3.

Overall, refinery gas is a clean burning fuel provided proper precombustion cleanup and combustion modifications are used. The estimated emissions for by-product gas firing are as follows in Table 2.3-2.

TABLE 2.3-2

ESTIMATED EMISSIONS FOR BY-PRODUCT GAS UTILIZATION

(lb/MMBTU)

Particulates	SO_2	CO	NO_x	NMHC
0.1	0.023	0.017	0.12	0.003

THE PACE COMPANY CONSULTANTS & ENGINEERS, INC. 5251 WESTHEIMER
P.O. BOX 53473 HOUSTON, TEXAS 77052 AC 713 965-0311 CABLE: PACECO-HOUSTON TELEX 77-4350

EVALUATION OF LOW BTU GAS AS AN ENERGY SOURCE

EVALUATION OF LOW BTU GAS AS AN ENERGY SOURCE

This section will evaluate the use of low and medium BTU gas as an alternate energy source for the ALPETCO refinery. The technical feasibility, economics, and environmental effects of the manufacture and use of low and medium BTU gas will be discussed.

There are two ways in which low and medium BTU gas could be produced for use in supplying refinery energy needs. Flexicoking of the vacuum residuum is one method and is included in the proposed project design. This technology is described in Section 3.4.2. The second method, discussed in this section, is to produce low or medium BTU gas by gasifying coal.

UTILIZATION OF LOW AND MEDIUM BTU GAS

The technology for burning low and medium BTU gas in process heaters, boilers and other combustion devices is available; however, the specific combustion characteristics of these gases need to be considered during design. Such items as gas volume, flame temperature, flame length, flame stability, heating value and ignition characteristics must be considered. Although the composition of the gas produced from various gasifiers and by flexicoking will differ, a generalized discussion of the above parameters can be presented.

Gas Volume

In comparing low or medium BTU gas to natural gas, a characteristic that is often misinterpreted is the heating value of the fuel on a volume basis. Inspection of the volumetric heating values of these fuels indicates that low and medium BTU gas must to be delivered to the heater at 3.6 to 7.6 times the flow rate of natural gas to achieve the same heat input.

For inplant applications however, it is more appropriate to evaluate the heating values in terms of the total volume of air-fuel mixture. This is particularly true when the burners are of the premix type, where air and fuel gas are mixed prior to being burned. As seen in Table 2.4-7, the heating values of natural gas, oxygen-blown coal gas, air-blown coal gas and flexicoker gas are 96.1, 89.5, 73.1 and 66.3 BTU/SCF of stoichiometric air-fuel mix respectively. Expressed in this way, the heating values of the gases are not as different as might be expected upon initial study. In normal firing with 10% excess air these values become even closer due to the high air/fuel ratio when firing natural gas. Then the total gas volume, relative to that when firing natural gas, is 1.07 for the oxygen-blown gas and 1.31 for air-blown gas produced from a bituminous coal and 1.45 for flexicoker gas. The increased volume of gases, 7 to 45%, can have a positive benefit by causing faster circulation of the combustion products and, therefore, better heat distribution throughout the furnace. Unfortunately, the pressure drop at the burner will always be higher than is the case with natural gas.

Flue gas volumes produced by burning low and medium BTU gas will be different than when burning natural gas. Low BTU gas produces 12,500 SCF of flue gas per million BTU fired, flexicoker gas 15,980 SCF and medium BTU gas produces only 9,823 SCF (this is lower than the value of 10,482 for natural gas).

Flame Temperature

Adiabatic flame temperatures for various gases are presented in Table 2.4-7. The flame temperature of medium BTU gas, approximately 3,600°F, is somewhat above that of natural gas at 3,560°F. Other medium BTU gas compositions can result in even higher temperatures. The flame temperature of low BTU gas of 3,200°F and flexicoker gas of 3,100, is lower mainly because of the high nitrogen content in the fuel. The lower flame temperatures will significantly reduce the rate of radiative heat transfer in, for example, furnace applications. To raise the flame temperature to a desirable level, the fuel and the combustion air, or the air alone, may be preheated. Figure 2.4-1 shows the effect of feed preheating on the flame temperature of low BTU, medium BTU, and natural gases. Low BTU gas can give a flame temperature of 3,560°F if both the stoichiometric air and the fuel are preheated to about 650°F.

TABLE 2.4-7

COMPARISON OF GAS COMBUSTION CHARACTERISTICS

ANALYSIS %	Natural Gas	Medium BTU Gas (Oxygen-Blown)	Low BTU Gas (Air-Blown)	Flexicoker Gas
CO	—	37.9	28.6	16.3
H_2	—	38.4	15.0	20.5
CH_4	99.0	3.5	2.7	1.4
C_2H_6	0.2	—	—	—
C_2H_4, C_6H_6	—	—	—	—
CO_2	0.2	18.0	3.4	12.9
O_2	—	—	—	—
N_2	0.6	2.2	50.3	48.9
TOTAL	100.0	100.0	100.0	100.0
VOLUME				
SCF Air/ SCF Fuel	9.47	2.15	1.30	1.01
Fuel Mix, SCF/MM BTU	10,406	11,173	13,680	15,080
Flue Gas, SCF/MM BTU	10,482	9,823	12,500	15,980
HIGHER HEATING VALUE				
BTU/SCF Fuel Gas	1006	282	168	133.3
BTU/SCF Air-Fuel Mix	96.1	89.5	73.1	66.3
BTU/SCF Flue Gas	95.4	101.8	80.1	62.6
FLAME TEMP.				
°F	3,560	3,600	3,200	3,100
RELATIVE FLOW RATE (Compared to Natural Gas)				
Fuel Gas	1.0	3.57	5.99	7.55
Air-Fuel Mix	1.00	1.07	1.31	1.45
Flue Gas	1.00	0.94	1.19	1.52

Figure 2.4-1

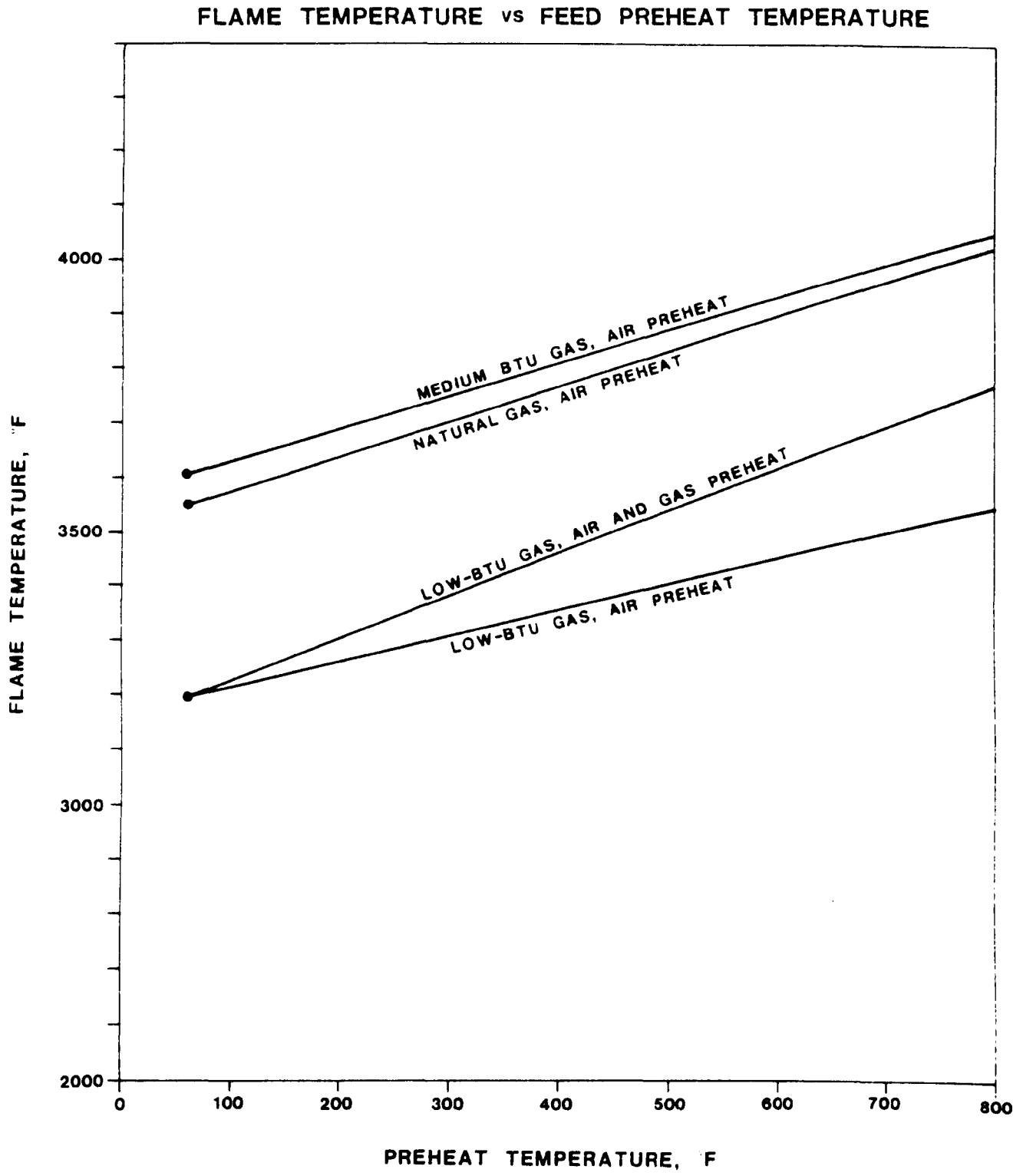
FLAME TEMPERATURE vs FEED PREHEAT TEMPERATURE
MEDIUM BTU GAS, AIR PREHEAT
NATURAL GAS, AIR PREHEAT
LOW-BTU GAS, AIR AND GAS PREHEAT
LOW-BTU GAS, AIR PREHEAT
FLAME TEMPERATURE, °F
4000
3500
3000
2000
0
100
200
300
400
500
600
700
800
PREHEAT TEMPERATURE, °F

Flame temperature, however, is not the sole factor affecting radiative heat transfer in a furnace. The thermal radiation properties of the combustion products vary with each different fuel, and consequently the radiation from hot gases could be more or less than that from natural gas even if the flame temperatures are identical. The combustion products will contain varying amounts of nitrogen, carbon dioxide, and water vapor. Nitrogen radiates no heat and is transparent to radiation. Carbon dioxide and water vapor, however, are good radiators. The individual emissivities of these two radiating species varies with the concentration (or partial pressure), also the temperature level and the length of radiation path. Furthermore, the individual emissivities interact in a complex manner to affect the total emissivity for CO_2 and H_2O in a mixture. For the purpose of comparing the relative radiant flux from the three combustion gases, the emissivities at 3,600°F, 1 atm, and for one foot of radiation path are summarized in Table 2.4-8. As can be seen, the combustion products from medium BTU gas will radiate 2 percent more heat and the Flexicoker gas 4 percent more than would natural gas under identical conditions. In contrast, the combustion products of low-BTU gas will radiate 10 percent less even if the feed is preheated to produce a 3,600°F flame. This can be attributed partly to the relatively high content of inert nitrogen.

It must be cautioned that actual conditions in a furnace may be quite different from those which were assumed in arriving at the above figures. The combusted gases may not be well mixed, and large gradients in the water and carbon dioxide concentrations may exist in various areas. As noted earlier, the increased volume of burned low-BTU gas may actually change the combustion pattern, affecting convective as well as radiative heat transfer. Furthermore, the overall radiative heat transfer consists of flame radiation as well as gas radiation. Controls on flame radiation, such as on the luminosity of the flame by injecting a small amount of oil or pulverized coal, can sometimes be used to at least partially offset changes in the gas radiation.

TABLE 2.4-8

COMPARISON OF COMBUSTION PRODUCTS

Composition	Natural Gas	Medium Btu Gas (Oxygen-Blown)	Low Btu Gas (Air-Blown)	Flexicoker Gas
(vol %)				
CO_2	9.52	21.45	16.71	18.77
H_2O	18.98	16.40	9.82	17.01
N_2	71.50	62.15	73.47	64.22
Emissivity (3600°F, 1 atm, and 1 ft. path)				
eCO_2	0.025	0.038	0.035	.037
eH_2O	0.031	0.026	0.015	.026
$eCO_2 + H_2O$	0.051	0.052	0.046	.053
Relative Radiant Flux From Combustion Gas (Nat. Gas = 1)	1.00	1.02	0.90	1.04

Flame Length

Changes in flame length as a function of fuel heating value are important in evaluating the performance within a furnace, because the size and shape of the flame affect the rate of radiative heat transfer (flame radiation). When changing fuel gas, it has been observed experimentally that the flame length generally decreases as the higher heating value (expressed in BTU/SCF of pure fuel gas) decreases. When the ratio of flame length to nozzle diameter is plotted against the higher heating value (HHV), the relationship is nearly linear for a number of fuel gases, including low BTU gas. For a given burner, therefore, low BTU gas will give a flame only one-fifth or one-sixth as long as to that of natural gas. Oxygen-blown medium BTU gas can be expected to show a proportionate decrease to about one-third or one-fourth.

Flame length can be increased by enlarging the burner diameter. This is a costly procedure however, and may encourage flame instability due to flash back. A simpler procedure could be to vary the amount of air swirl, if the burner is of the type that uses swirling (tangential) air flow and radial gas injection. By reducing the tangential-to-radial flow components of combustion air, i.e., by decreasing the momentum of air-and-fuel gas mixture in the radial direction, the flame length increases. Thus, by changing the air register vanes or baffles to decrease the amount of air swirl (but not the total amount of combustion air) it may be possible to hold a fixed flame length when switching from natural gas to coal gases having lower heating values.

Flame Stability

Flame stability is often characterized in terms of flashback and blowoff limits. The phenomenon of flashback, or the passing of flame into the port through which a fuel-air mixture flows, occurs when the stream velocity is reduced to a certain critical value. Similarly, the phenomenon of blowoff occurs when the velocity is increased above a certain limit. These characteristic limiting values vary from fuel to fuel, and can be summarized in a flame stability diagram for a range of fuel-to-air ratios.

Figure 2.4-2 is such a diagram for 100% methane, which may be taken to represent natural gas. Plotted on the abscissa is the fuel gas concentration expressed in fraction of stoichiometric, so that a rich mixture will have a value greater than unity while a lean mixture a value less than one. The ordinate gives values of the critical boundary velocity gradient (defined as the rate of change of stream velocity at the edge of the exit plane of the burner port when flashback or blowoff occurs). This quantity is roughly proportional to the average flow velocity divided by the characteristic burner diameter. Thus, for a given burner, the critical velocity gradient at flashback is closely related to the burning velocity of the flame. It is also considered to be related to the ignition delay time and the peak frequency of the combustion roar spectrum.

As can be seen in Figure 2.4-2, the two critical curves define a region in which natural gas (methane) can be burned to produce a stable flame. For comparison, the flame stability diagram for a fuel containing 83.3% CO and 16.7% H_2 is shown in Figure 2.4-3. Clearly, the stability region for this fuel is substantially different from that for

Figure 2.4-2

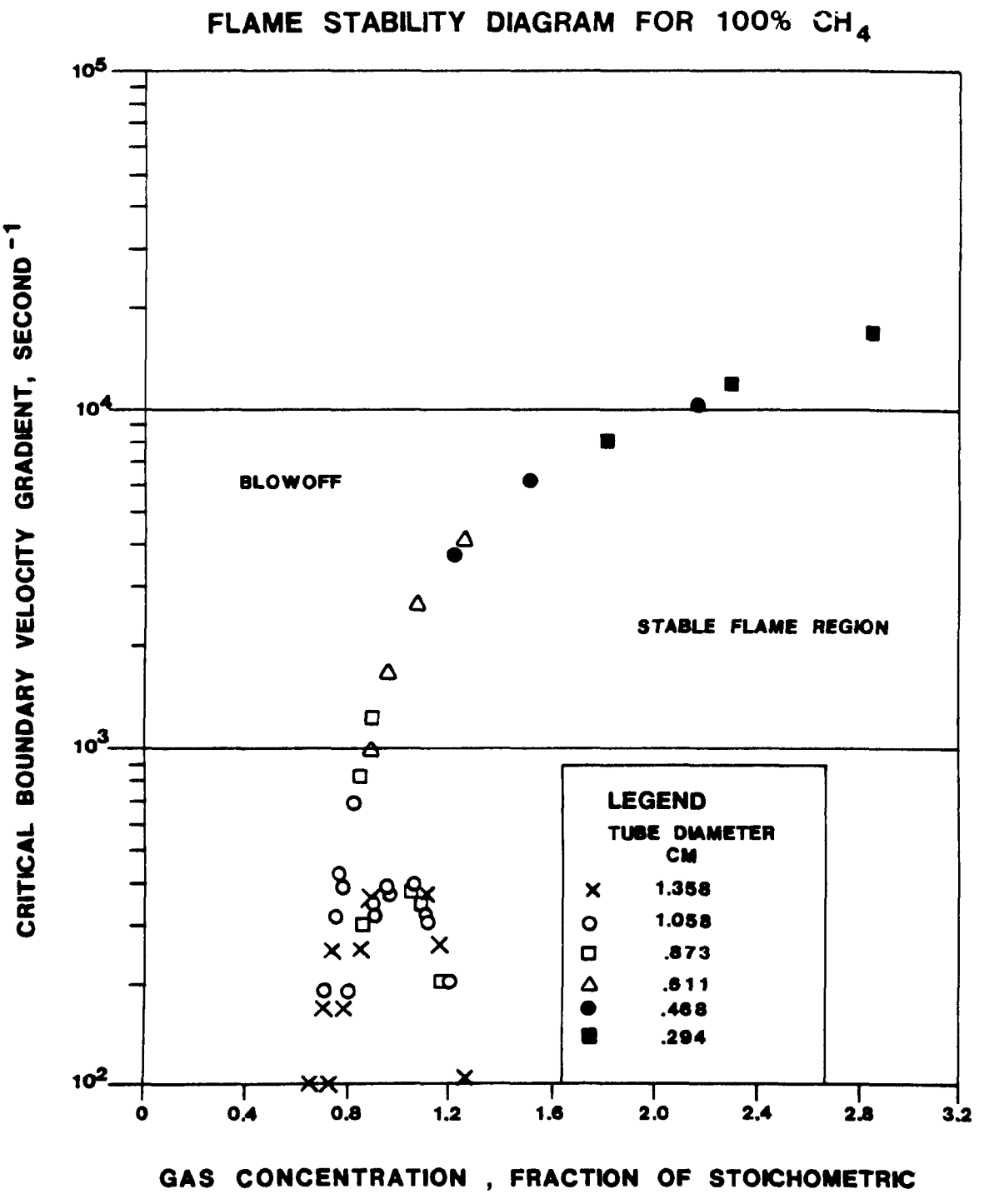
FLAME STABILITY DIAGRAM FOR 100% CH_4
CRITICAL BOUNDARY VELOCITY GRADIENT, SECOND^{-1}
10^5
10^4
10^3
10^2
BLOWOFF
STABLE FLAME REGION
LEGEND
TUBE DIAMETER CM
1.358
1.058
.873
.611
.468
.294
0
0.4
0.8
1.2
1.6
2.0
2.4
2.8
3.2
GAS CONCENTRATION , FRACTION OF STOICHOMETRIC

Figure 2.4-3

FLAME STABILITY DIAGRAM FOR 83.3% CO, 16.7% H_2

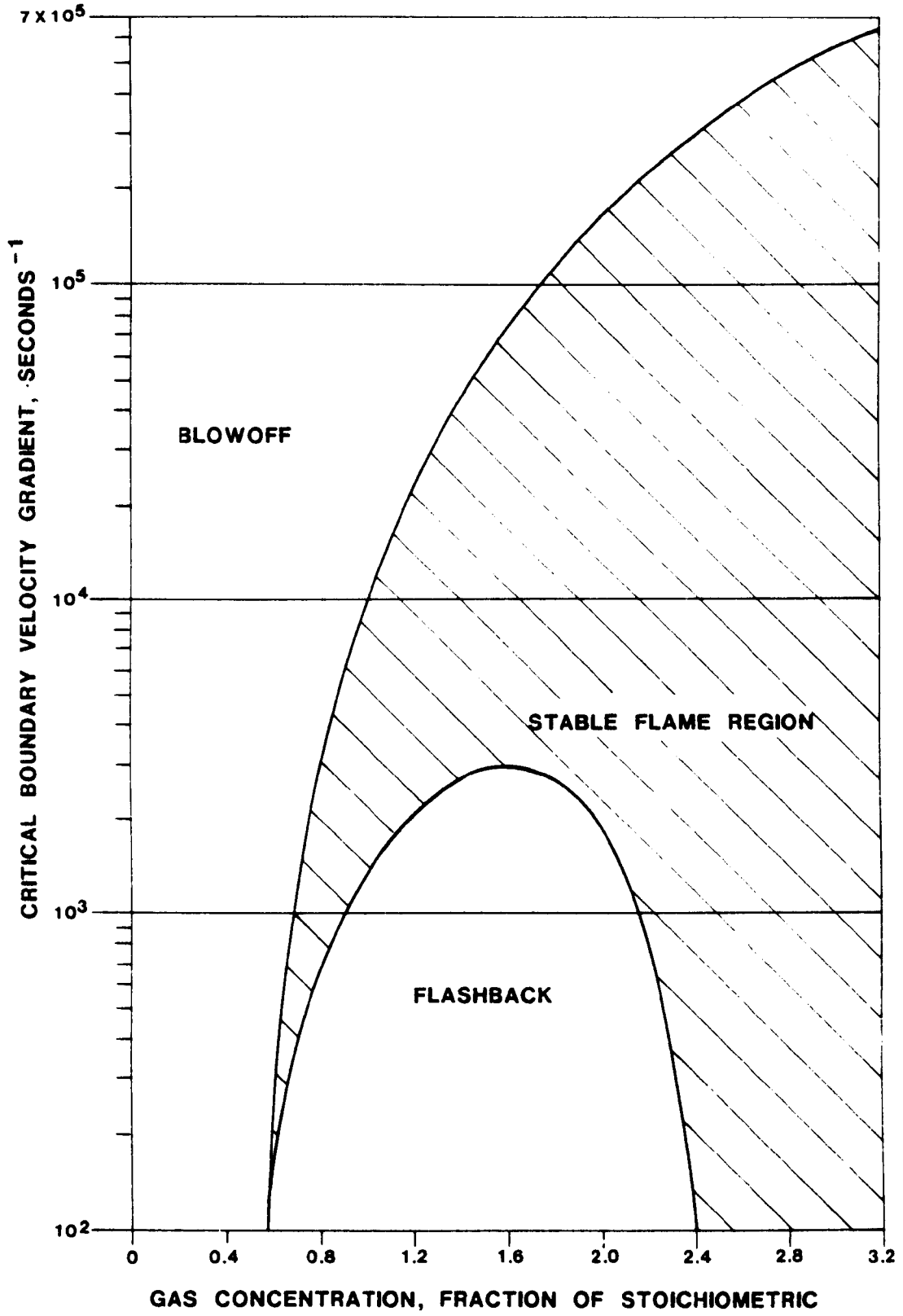

natural gas, mostly because H_2 burns much faster than natural gas. Note also that, in the case of natural gas, the flashback curve nearly reaches the maximum value when the fuel air mix is stoichiometric. In the case of CO-H_2 fuel, the maximum occurs at a fuel-rich composition.

Because low and medium BTU gases contain mostly CO, H_2, and very little methane (N_2 and CO_2 are considered as diluting inert gases), the characteristics of these gases should resemble those of the CO-H_2 fuel just shown. The low and medium BTU gases would burn faster than natural gas because of the presence of hydrogen. For a given burner, therefore, it is necessary to supply a coal gas/air mixture at a higher stream velocity and richer in fuel than is necessary with natural gas to prevent flashback and maintain a stable flame. The deviation from natural gas is slightly less pronounced with low BTU gas because of the lower hydrogen content and high nitrogen content.

Air emissions resulting from the combustion of low or medium BTU gas produced from coal are estimated as follows:

	TPY	lb/MMBTU
SO_2	14	0.006
Particulates	2.2	0.010
CO	38	0.017
NO_x	269	0.120
NMHC	7	0.003

These estimates are based on burning 12,291 MMBTU/D of gas. Emission factors used for the estimates are for firing natural gas with the exception of SO_2 which is based on sulfur removal in the fuel gas to a level of 10 and 5 ppmv for the medium and low BTU gas respectively. This level of sulfur removal is within the capabilities of commercially available acid gas removal processes. The estimate is conservative for low BTU gas which should have much lower NO_x emissions primarily due to lower flame temperatures.

APPLICATION OF LOW BTU FLEXICOKER GAS FOR ALPETCO REFINERY

The process description and estimated emissions resulting from the use of low Btu gas produced from coke are discussed in section 3.4.2 and 3.4.3. The use of coke produced from the refinery vacuum residuum is very desirable in that it utilizes a low quality refinery byproduct (coke) and converts it into a clean refinery fuel.

Low Btu gas from coke supplies 25% of the refinery fuel needs. The low Btu gas resulting from the gasification of flexicoker coke is treated to remove particulates and sulfur so that a clean low sulfur (less than 0.2 wt %) gas is produced. This low Btu gas is fed into the refinery fuel gas header and fired in conventional process heaters and reactors.

APPLICATION OF LOW/MEDIUM BTU COAL GAS FOR ALPETCO REFINERY

Although not environmentally nor economically desirable, low and medium BTU gas produced from coal could be used to supplement the refinery by-product gas, replacing propane and cycle oil in the fuel system.

The gasification plant would be a "stand alone" complex and classified as an offsite in the overall refinery configuration. The gasifier system used for this discussion is based on Lurgi technology. A typical flow diagram for the plant is shown in Figure 2.4-4 for air blown operation and Figure 2.4-5 for oxygen blown. The plant would produce cold, clean gas free of tar, oils and other contaminants such as sulfur and ammonia. The produced gas would be mixed into the refinery fuel system via the fuel header system.

Typical process operation of a gasification plant involves 5 separate steps. Initially, coal is brought from the storage area and sized by crushing and grinding to the proper size consist. For Lurgi technology, this is 1/8 inch x 1-1/2 inch. The sized coal is fed through a lock hopper system to the gasifier where low or medium BTU gas is produced. The hot, dirty gas is then sent to gas quenching and cooling which removes particulates and hydrocarbon liquids, i.e. tars and oils. The cooled, quenched gas then passes to the acid gas removal unit where H_2S and ammonia are removed. The cleaned gas produced is expanded to the proper system pressure and sent to the refinery fuel system.

The capital and operating cost data is based on proposed commercial plants utilizing western coal (similar in properties to Alaskan coal). The overall energy output required is 12,291 MMBTU/D (equivalent to contribution from clarified oil and propane). The plant would require 950 TPD of coal and a 45 day storage supply totaling 42,750 tons. The complex would produce 81,940 MSCFD of low (150 BTU/SCF) BTU or 40,970 MSCFD of medium BTU (300 BTU/SCF) gas.

Capital costs for a low BTU plant are estimated to be $34 million. The detailed cost breakdown by area is given in Table 2.4-9. Medium BTU gas capital costs are estimated to be $41.5 million, and an area cost breakdown is given in Table 2.4-9.

Figure 2.4-4

AIR BLOWN COAL GASIFICATION PLANT

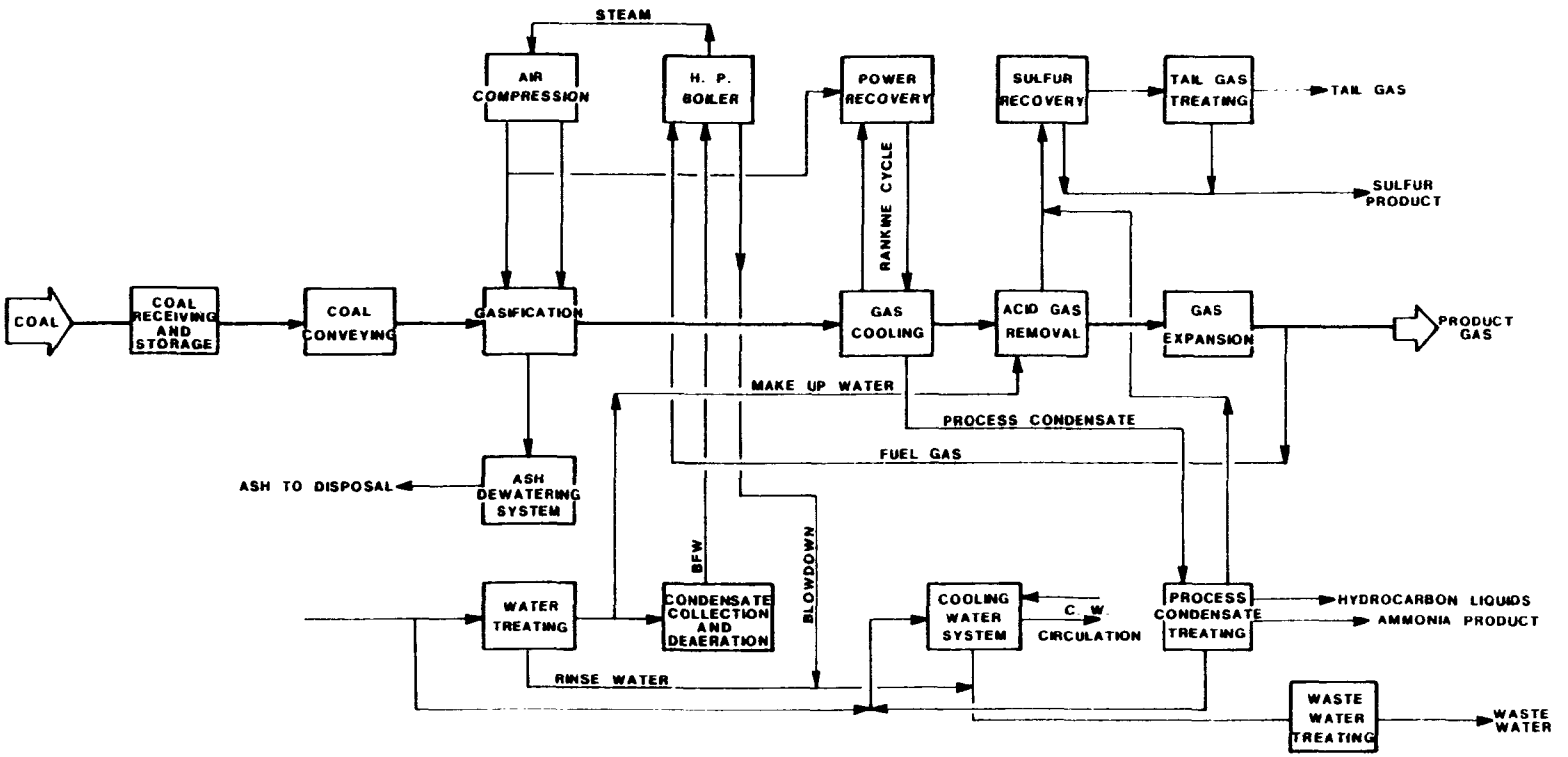

Figure 2.4-5

OXYGEN BLOWN GASIFICATION PLANT

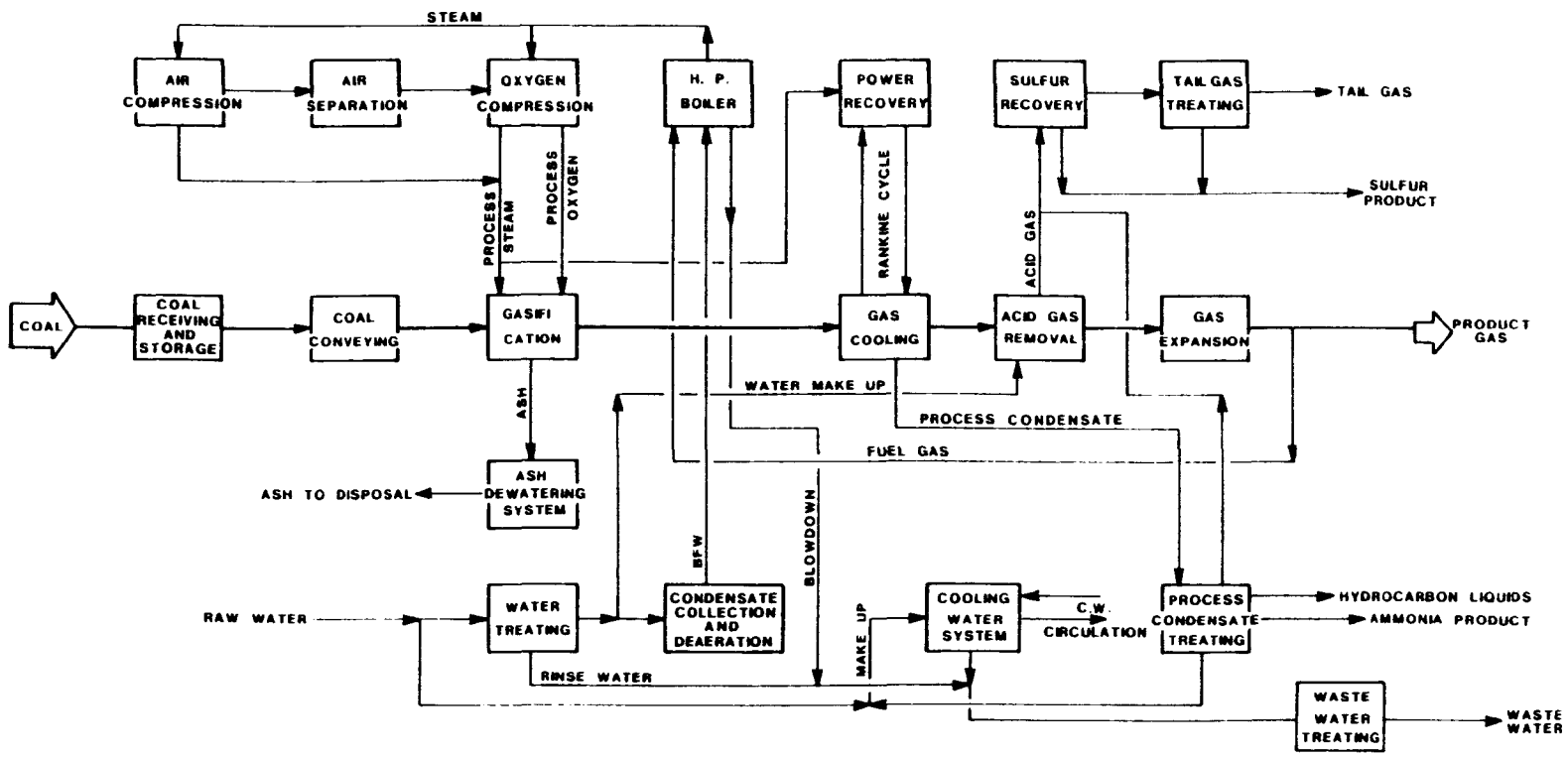

TABLE 2.4-9

CAPITAL COST ESTIMATE, 12,291 MMBTU/D
COAL GASIFICATION COMPLEXS

Units	Low BTU (M$)	Medium BTU ($M)
Coal Handling	2,312	2,322
Gasification	3,026	3,028
Gas Cooling	510	498
Desulfurization	6,732	6,720
Sulfur Recovery	374	381
Ash Handling	177	182
Gas-Liquid Separator	748	746
Phenol Extraction	408	360
Ammonia Recovery	442	456
H_2O Treatment & Steam	12,817	12,817
C. W. System	850	788
P & I Air	265	265
Waste H_2O Treatment	1,632	1,617
Support	3,094	3,069
Flare & Incinerator	612	626
Oxygen Plant	—	7,603
TOTAL	34,000	41,480

TABLE 2.4-10

ESTIMATED ANNUAL OPERATING COST, LOW/MEDIUM BTU COAL GASIFICATION COMPLEX

	Low BTU ($)	Medium BTU ($)
Raw Materials		
Coal @ $25.91/ton	8,675,700	8,149,300
Catalyst & Chemicals	918,000	1,119,960
Utilities		
- Water	132,600	161,770
- Electricity	945,200	1,153,100
Supplies		
- Operating	340,000	414,800
- Maintenance	1,360,000	1,659,200
Labor	1,020,000	1,244,400
Administration & Overhead	204,000	248,880
Taxes & Insurance	918,000	1,119,960
Depreciation (20 year life St. line)	1,700,000	2,074,000
Total Operating Cost	16,213,500	17,345,370

Operating costs for both plants are based on a percentage of plant investment. This method was used since no actual operating cost data for plants in these size ranges exists. These percentages are derived from Department of Energy studies ( ) and from proposed commercial plant designs. Operating costs, as a percent of plant investment, are listed below:

- Raw materials (coal - calculate @ 75% gasifier efficiency
- Catalyst and chemicals - 2.7%
- Utilities
  - Water - 0.39%
  - Electricity - 2.78%
- Supplies
  - Operating - 1%
  - Maintenance - 4%
- Direct Labor - 3%
- Administration and overhead - 20% of Direct Labor
- Taxes and insurance - 2.7%
- Depreciation - 20 year straight line

The operating costs for both plants are given in Table 2.4-10.

COAL GASIFICATION TECHNOLOGY

Gasification of coal to make low and medium BTU gas has been practiced for many years in the United States, and in other countries where abundant supplies of coal are found. At one time, a large number of gasifiers were in service in the U.S. but were retired when inexpensive natural gas became available. These gasification technologies can still provide a replacement fuel for gas and oil in process heaters and boilers. Commercial processes for low/medium BTU gas are available with considerable operating experience and are relatively dependable.

Approximately 68 different gasification processes can be identified which have been used in the past, are being used now, or are currently under development. Of these 68 gasifiers, there are 25 that are the most prominent in terms of existing commercial use or near term development. These are listed in Table 2.4.1. A summary of the characteristics of gasifiers with near term application in the U.S. is given in Table 2.4.2. All of these processes involve the partial oxidation of coal and produce low BTU (~150 BTU/SCF) gas when air is used, or medium BTU gas (~350 BTU/SCF) with the use of oxygen.

Ten of the gasifiers listed in Table 2.4-1 are being used currently to satisfy some commercial demand for low/medium BTU gas. These are:

- Lurgi
- Wellman-Galusha (McDowell Wellman)
- Woodall-Duckham/Gas Integrale
- Koppers-Totzek
- Winkler
- Chapman (Wilputte)
- Babcock & Wilcox
- Riley-Morgan
- Foster Wheeler/Stoic
- Wellman Incandescent (ATC/Wellman)

In most cases, these processes represent "off the shelf" technology and could be used for near term energy production. A summary of these units is given in Table 2.4-3.

TABLE 2.4-1

U.S. AND FOREIGN STATUS OF LOW/MEDIUM-BTU GASIFICATION TECHNOLOGY

Gasifier	Licensor/Developer	No. of gasifiers currently operating (No. of gasifiers built)			Location	Scale
		Low-Btu Gas	Medium-Btu Gas	Synthesis Gas		
Lurgi	Lurgi Mineraloltechnik GmbH	5	(39)	(22)	Foreign	Commercial
Wellman-Galusha	McDowell Wellman Engineering Co.	8(150)	—	—	U.S. Foreign	Commercial
Gas Integrale	Woodall-Duckham (USA) Ltd.	(72)	—	(8)	Foreign	Commercial
Koppers-Totzek	Koppers Company, Inc.	—	—	(39)	Foreign	Commercial
Winkler	Davy Powergas	—	(23)	6(14)	Foreign	Commercial
Chapman	Wilputte Corp.	2(12)	—	—	US	Commercial
Riley-Morgan	Riley Stoker Corp.	1	—	—	US	Commercial
BGC/Lurgi Slagging	British Gas Corp. and Lurgi	—	1	—	Foreign	Demonstration
BI-GAS	Bituminous Coal Research, Inc.	—	1	—	US	Demonstration
Stoic	Foster Wheeler/Stoic Corp.	1	—	—	US/Foreign	Demonstration/ Commercial
Pressurized Wellman-Galusha	DOE, MERC	1	—	—	US	Demonstration
GFERC Slagging	DOE, GFERC	—	1	—	US	Demonstration
Texaco	Texaco Development Corp.	—	—	1	US	Demonstration
BCR Low-Btu	Bituminous Coal Research, Inc.	1	—	—	US	Demonstration
Combustion Engineering	Combustion Engineering Corp.	1	—	—	US	Demonstration
HYGAS	Institute of Gas Technology	—	1	—	US	Demonstration (High-Btu)
Synthane	DOE	—	1	—	US	Demonstration (High-Btu)
CO_2 Acceptor	DOE	—	1	—	US	Demonstration (High-Btu)
COGAS	COGAS Development Co.	—	1	—	US	Demonstration (High-Btu)
Foster Wheeler	Foster Wheeler Energy Corp.	1	—	—	US	Pilot
Babcock & Wilcox	The Babcock & Wilcox Co.	1	—	—	US	Pilot
U-Gas	Institute of Gas Technology,	1	—	—	US	Pilot
Westinghouse	Westinghouse Electric Corp.	1	—	—	US	Pilot
Coalex	Inex Resources, Inc.	1	—	—	US	Pilot/Commercial
Wellman Incandescent	Applied Technology Corp.	2	—	—	US/Foreign	Commercial/ Demonstration

TABLE 2.4-2

COAL GASIFIERS WITH POTENTIAL NEAR-TERM COMMERCIAL APPLICATION IN THE U.S.

Gasifier	Plant/Location	Coal types tested (U.S.)	Particulate Removal	Quenching, Cooling	Acid Gas Removal	End Use	Status
Lurgi	SASOL Salsolburg, S.A.	Bituminous	WC	WHB, WC trim cooler	Rectisol	Synthesis gas domestic fuel gas	1
Wellman-Galusha	Glen-Gery Brick Co. Reading, PA.	Anthracite	Hot cyclone	None	None	Fuel gas for brick kiln	1
	National Lime Co. Carey, OH	Bituminous	Hot cyclone	None	None	Fuel gas for lime kiln	1
Woodall-Duckham/Gas Integrale	Chomutov Tube Works Czechoslovakia	Lignite	Hot cyclone/hot ESP, WC	WC, trim cooler	None	Fuel gas for metallurgical process	1
Koppers-Totzek	Azot Sanauyii T.A.S. Kutahya, Turkey	Lignite	WHB, WC, wet cyclone	WHB, WC, wet cyclone	Sulfinol/ Rectisol	Synthesis gas for ammonia production	1
Winkler	Azot Sanayii T.A.S. Kutahya, Turkey	Lignite	WHB, hot cyclone, WC	WHB, WC	Iron oxide, NaOH wash	Synthesis gas for ammonia production	1
Chapman (Wilputte)	Holston Arsenal Kingsport, TN	Bituminous	Hot cyclone	Water sprays, WC	None	Fuel gas for acetic anhydride process	2
Riley-Morgan	Riley Research Center Worchester, MA	Anthracite, Bituminous	Hot cyclone	None	None	PDU - product gas flared	2
Coalex	Inex Resources, Inc. Lakewood, CO.	All types	None	None	Additive to coal feed	Fuel gas to boiler	2
Pressurized Wellman-Galusha	DOE MERC Morgantown WV	Subbituminous, Bituminous	Hot cyclone	None	None	PDU - product gas flared	3
BGC/Lurgi Slagging Gasifier	Westfield Centre Westfield, Scotland	Bituminous	WC	WHB,WC	Rectisol	PDU - product gas flared	3
GFERC Slagging Gasifier	DOE Grand Forks Energy Research Center	Lignite	WC	WC, trim cooler	None	PDU - product gas flared	3
Texaco	Montebello Research Lab. Montebello, CA	Lignite, Bituminous	Water sprays, quench tank,WC	Water sprays, quench, WC	DNA	PDU - product gas flared	3
BI-GAS	Bituminous Coal Research, Inc.,Homer City, PA.	Lignite, Bit., Subbituminous,	Hot cyclone, WC	WC	Selexol	PDU - product gas flared	3
Foster Wheeler/Stoic	University of Minnesota	Subbituminous	Hot ESP, hot cyclone	None	None	Fuel gas for steam boiler	3
Wellman Incandescent	York, PA	Bituminous	Hot ESP, cyclone	None	Stretford	Fuel gas	2

[1]Commercially available; significant numbers of units currently operating in the U.S. or in foreign countries.

[2]Commercially available or operating; near-term application possible.

[3]Operating or being constructed as demonstration units.

WHB = Waste Heat Boiler

WC = Wash Cooler

ESP = electrostatic precipitator

PDU Process Demonstration Unit

TABLE 2.4-3

GASIFIER GENERAL CHARACTERISTICS

Vendor/Gasifier	Gasifer Type	Size Range, MM BTU/hr	Commercial Installations	Operating Pressure	Gas HHV, BTU/SCF	Source
ATC/Wellman Incandescent	GB	10-84	22	ATM	170-200	Air
Babcock & Wilcox	EF	300	1	1-15 ATM	300	Oxygen
Davy Powergas/Winkler	FB	750-1500	36	1-10 ATM	125-280	Air or O_2
Foster Wheeler/Stoic	GB	22-90	20	ATM	160-200	Air
Koppers/Koppers-Totzek	EF	300-500	43	ATM	290	Oxygen
Lurgi	GB	400	58	20 ATM	195-307	Air or O_2
McDowell Wellman/Wellman-Galusha	GB	26-63	150	ATM	168	Air or O_2
Riley Stoker/Riley-Morgan	GB	84	1	ATM	160-306	Air or O_2
Wilputte	GB	50	11	ATM	165-300	Air or O_2
Woodall-Duckham	GB	72	100	ATM	176-285	Air or O_2

GB = Gravitating Bed
EF = Entrained Flow
FB = Fluidized Bed

Gasifier Technology

The objective of coal gasification is to produce a low/medium BTU gas by reacting coal with a steam/air or steam/oxygen mixture. There are a number of gasifiers which can accomplish this task, and each has characteristics that make it unique from both a process and an environmental viewpoint.

Gasifiers are generally placed in three main categories depending on bed type. The classifications are:

- Fixed or supported bed (also known as moving bed or gravitating bed)
- Fluidized bed
- Entrained bed

Within each of these major classes, gasifiers are further characterized by a number of operating parameters. Included in this set of parameters are:

- Operating conditions
  - Pressure: atmospheric or pressurized
  - Temperature

  Gasification Media
  - Reactants: steam, air, oxygen
  - Coal feed/reactant ratios
  - Method of reactant introduction

  Coal Feeding
  - Method: continuous or intermittent
  - Mechanism: lock hopper, slurry, screw feeder
  - Location: top or center of gasifier
- Ash removal
  - Method: continuous or intermittent
  - Ash conditions: dry or slagged
  - Location: from the gasifier or from the product gas stream

- Energy input for gasification
  - Autothermic: energy supplied by partial combustion of the feed coal in the gasifier.
  - Solids circulation/heat transfer: energy supplied by external heating and circulation of additives or inert solids.

In gasification systems, each process is trying best to exploit the chemistry and thermodynamics of coal gasification. The common feature is that coal, in a reactor, is being contacted with a gasification agent at temperatures of at least 1300°F and converted from the solid to the gaseous state, with ash being the only residue. Almost always, these gasification agents are H_2O and CO_2, with the latter being formed by the reaction $C + O_2 \rightarrow CO_2$. The resulting crude gas consists of CO, H_2, and CH_4 as the desired products, and CO_2, H_2O, and N_2 as accompanying inert components, plus sulfur compounds, carbonization products and trace components. The actual composition of the gas is influenced by the type of coal, the composition of the gasification agent, and the thermodynamics of the gasification reactions. Pressure, countercurrent or co-current operation, and the influence of the particular coal ash also affect the gasification process.

Gasification under pressure reduces gas velocities, and therefore the pressure drop along the reactor. This minimizes the carryover of coal fines and favorably affects the rates of heat and mass transfer. Much higher specific reactor capacities can be obtained. Pressure also helps shift reaction equilibria for methane formation in the desired direction because these reactions involve a decrease in volume. A beneficial side effect of this shift is that of the increased heat release from methane formation. This reduces oxygen consumption by providing part of the heat required for the endothermic gasification reactions. Under high pressures, for every volume of oxygen, five to ten volumes of dry crude gas are obtained.

Although it has been shown that operation at pressure produces distinct advantages, in many applications pressurized operation will not be economical and operation at atmospheric pressure is sufficient. Unfortunately for pressurized operation, it is difficult to predict a general optimum pressure. It must be determined for each particular application.

Countercurrent flow of gas and coal is probably the ideal mode of operation for complete gasification, that is without any output of residual char. It ensures that the sensible heat of the gasification agent is being used largely for gasification and that the preceeding steps of drying and carbonization result in a lower gas outlet temperature and higher efficiency. With countercurrent operation, the residual char is being burnt, supplying the reaction heat "in situ" for gasification. Cocurrent operation discharges some unburned char, representing a heat deficit for the reactor. This heat can be recovered by burning in other equipment and for some installations, represents a usable multi-product process. However, for most industrial applications the secondary recovery of heat from char does not represent the most economical method for total coal utilization.

The varying composition of coal ashes also has a great influence on the process. Gasification takes place in the range of 1300°F to 2700°F, and temperatures above 1800°F are necessary in at least part of the reactor to ensure complete gasification. At temperatures exceeding 1800°F, the ash begins to sinter, then starts to soften, and finally becomes a liquid.

Ash can be discharged either in slightly sintered condition by keeping the temperature below the fusion point, or as a liquid by allowing temperatures to rise above the ash fusion point. The fusion properties of ash can be divided into two groups:

- A "short" slag, where the temperature differential between softening and flow point is rather small. Ashes with short slag characteristics generally tend to have a low fusion point.

- A "long" slag, where the phases of sintering, clinkering, softening and flowing extend over a wide temperature range.

For a slagging type gasifier, a short slag is desirable. In some instances, a fluxing agent, usually lime, is added to the ash to aid in complete melting.

The coal-steam reaction is strongly endothermic. Thus, heat must be supplied, with the amount required varying considerably with the particular process. Depending on both process and coal properties, 15-35% of the coal's potential heat of combustion

is consumed for this purpose. Countercurrent gasification in a moving bed has the lowest heat consumption, while cocurrent gasification (the entrained suspension process), can be found at the upper end of the range. Heat consumption for the fluidized bed process lies between the other two.

There are various means for supplying the reaction heat to the process:

- Direct heat, supplied by partial combustion of raw coal or of residual char with oxygen (or air) in the gasification reactor:

  $$C + O_2 \rightarrow CO_2 + 14{,}000 \text{ BTU/lb carbon}$$

- Heat transferred from a heat carrier, which is heated in a separate reactor by the combustion of coal or char with air. The heat carrier may be either a solid or a liquid.

- Direct heat supply by parallel chemical reactions. Examples:

  $$CaO + CO_2 \longrightarrow CaCO_3 + 1{,}400 \text{ BTU/lb CaO}$$

  $$C + 2H_2 \longrightarrow CH_4 + 2{,}700 \text{ BTU/lb carbon}$$

- Indirect heat transfer, where heat from a hot gas stream is transferred through tube walls to the coal and gasification agent. Electric heat or nuclear heat may be used also for an indirect heat supply.

Based on results from various bench scale and pilot plant studies for new processes to supply the heat of reaction, it appears that the use of oxygen or air for the direct combustion of residual char in the gasifier is not only the least expensive route, but is preferable from a process control point of view.

Fixed Bed Gasifiers

Fixed beds have several inherent characteristics that are advantageous in gasification processes. Flow of coal and residue is countercurrent to the gasification medium and the products of gasification. This leads to maximum heat utilization. The

countercurrent contacting permits both the coal and gaseous reactants to be preheated in the gasifier prior to reaction, thus increasing the overall efficiency of these reactions and ultimately the efficiency of the process. Also, increasing efficiency is the fact that preheat can be supplied from the process itself, rather than from an external source requiring an additional expenditure of energy. Relatively long residence time implies low gasification rates, but because of the high carbon conversion, thermal efficiencies are high. Low gas exit temperatures can be achieved, resulting in low oxygen or air consumption in the combustion zone. The product gas is not highly contaminated with solids, and plug flow of solids through the gasifier minimizes loss of unconverted carbon in the residue.

The fuel bed is characterized by four different temperature zones designated as:

1. Drying Zone - Located at the top of the gasifier where raw coal is dried and preheated by the hot gases flowing from below.

2. Devolatilization Zone - As the temperature continues to increase, volatile matter is distilled off, including methane, oils and tars.

3. Gasification Zone - Hot, devolatilized coal reacts with steam and carbon dioxide to form hydrogen and carbon monoxide.

4. Combustion Zone - Any remaining carbon in the coal char is burned with oxygen to supply the heat required in the upper zones.

In normal operations of a fixed bed gasifier, the four zones described above often overlap and no discrete separation exists. However, the chemical reactions and temperature ranges defining each zone are presented below.

In the drying zone, raw coal comes in countercurrent contact with hot product gas, which dries and preheats the coal. Depending on the coal and gasifier selected, the temperature in this zone can run from 200-400°F for two-stage and 700-1100°F for single-stage gasifiers. Two-stage gasifiers operate at the lower temperature range to permit gradual, controlled drying and devolatilization, and thus prevent thermal

cracking of the tars and oils. Because the removal of moisture absorbs heat, a coal with a high moisture content requires a long residence time in this zone. Added moisture lowers the temperature of the product gas and thus decreases overall thermal efficiency.

Drying and devolatilization may occur simultaneously, depending on the rate of heating. Additional moisture is removed as the temperature increases, then gases, oils and tars begin distilling out. Coal contains certain occluded gases such as carbon dioxide and methane, and inherent moisture. When the coal is heated the occluded carbon dioxide and methane are driven off, their removal being more or less complete at about 400°F. Above this temperature a certain amount of internal condensation occurs in the molecules comprising the essential coal substances; this also is accomplished by the evolution of carbon dioxide and water vapor. The extent of these reactions increases with decreasing coal rank.

In the temperature range 400°-900°F the organic sulfur constituents of coal decompose to hydrogen sulfide and other organic sulfur compounds. Decomposition of the nitrogenous compounds begins with the evolution of nitrogen and ammonia. In this temperature range also, decomposition of the essentual coal substance begins, resulting in the evolution of methane and higher hydrocarbons. The bulk, but no all, of the combined oxygen is also released, and appears in the evolved gases mainly as water and oxides of carbon.

The distillation of oils from coal begins at about 550°F to 750°F; the yield of tar usually increasing to a maximum at 900° to 1000°F. With light oil and tar there is usually an increase in aromaticity with increasing temperature. Thus, the liquids produced from coal at the lower temperatures consist mainly of cyclic hydroaromatic compounds with smaller quantities of olefins and paraffins. Few aromatic compounds of the benzene series are produced at low temperatures, while higher temperature tars contain quite high proportions of aromatic hydrocarbons.

The composition of gases and tars produced from coal varies with the type of coal, the temperature, the heating rate, and the composition of the heating medium. Yields of tar and gas increase with temperature and decreasing coal rank. The composition of the gas also changes; the carbon dioxide and methane content going up and the hydrogen content down with decreasing rank.

The devolatilized coal (now referred to as char) continues to descend in the bed and contacts steam and combustion gases rising up from the combustion zone. This reaction forms the bulk of the fuel gas produced in a fixed bed gasifier. Carbon dioxide rising from the combustion zone reacts with carbon resulting in the production of carbon monoxide via the endothermic reaction:

$$C + CO_2 \longrightarrow 2CO - 6{,}200 \text{ BTU/lb Carbon}$$

The extent to which the reaction occurs depends on the temperature and on the solid residence time. The steam introduced also reacts with carbon in the gasification zone via the two endothermic reactions:

$$C + H_2O \longrightarrow CO + H_2 - 4{,}500 \text{ BTU/lb Carbon}$$

$$C + 2H_2O \longrightarrow CO_2 + 2H_2 - 3{,}200 \text{ BTU/lb Carbon}$$

The first reaction occurs almost exclusively at and above 1,800°F and the second reaction dominates at 1,100°F. Between these two temperatures both reactions are occurring. A high gasification temperature is desirable to avoid the production of carbon dioxide.

The rate of the steam-carbon reactions is influenced by the quantity of steam present. It is important that as much of the steam as possible be converted into carbon monoxide and hydrogen. Endothermic carbon-steam reactions which occur during gasification are highly temperature dependent. High temperatures favor carbon and steam equilibrium conversion to produce fuel gas. The necessary endothermic heat of reaction to promote the carbon-steam reaction is provided wholly by the exothermic combustion of carbon and oxygen.

In addition to the steam/carbon dioxide/carbon reactions, sulfur will react endothermically with hydrogen and carbon monoxide to produce hydrogen sulfide and trace quantities of carbon disulfide and carbonyl sulfide. Approximately 90% of the sulfur in the coal will appear as hydrogen sulfide.

The combustion zone consists of a layer of gasified char supported by a layer of dry ash. The remaining carbon in the char reacts with oxygen to generate heat via the exothermic reaction:

$$C + O_2 \longrightarrow CO_2 + 14{,}000 \text{ BTU/lb Carbon}$$

The ash layer in the combustion zone serves two purposes. The first is to distribute the oxygen and steam feed evenly across the fuel bed, and the second is to make it possible to recover sensible heat in the hot ash by preheating the oxygen and steam mixture.

Fixed bed designs include:

- Lurgi
- Wellman-Galusha (McDowell Wellman)
- Woodall-Duckham (Gas Integrale)
- Foster Wheeler (Stoic)
- Riley-Morgan
- Wellman Incandescent (ATC/Wellman)
- Chapman (Wilputte)

Fluidized Bed Gasifiers

In general, fluidized-bed processes can accept fuels with wide variations in ash content and in sizes from 0 to 3/8 inch. Specific gasification rates are higher than with fixed-bed units. The high fuel inventory minimizes the chance of oxygen breakthrough and, therefore, gives a high degree of reliability and safety. A fluidized-bed system can be operated over a wide range of output without a significant loss in efficiency. Excellent heat transfer and particle mobility prevents local overheating or clinker formation. Operational disadvantages include: (1) High sensible heat loss occurs in the product gas as a result of the uniform temperature in the fluidized bed (some of the heat can be recovered in waste heat boilers but is not available for fuel gasification as in a fixed-bed process); (2) Carbon carryover in the product gas can result in high fuel losses, particularly with unreactive or friable fuels; (3) A high steady-state ash content is required in the fluidized bed to attain complete carbon conversion; (4) The range of possible operating conditions is restricted by the fluidization characteristics of the fuel.

Entrained Flow Gasifiers

Numerous systems for the gasification of pulverized coal while fully entrained in the gasifying medium have been evaluated in the past, and there are a few systems in commercial use today. The ability of the entrained suspension system to handle any type of coal is the most important characteristics of the process and has continued to hold considerable interest. Fuel is pulverized, and the individual fuel particles are separated by the entraining gas. This makes the coal caking properties unimportant in the operation of the process. Similarly, the ash fusion temperature is not important except in determining conditions for slagging or non-slagging operation. An inherent characteristic of entrained suspension is the production of synthesis or producer gas which is free of tars and has very little methane.

Certain limitations in entrained gasification result from the low concentration of fuel in the system and from the concurrent flow of fuel and the gasifying medium. Carbon carryover is usually high and fuel conversions are usually limited to 85 to 90 percent. Char carryover can be separated from the product gas with cyclone collectors and recycled to the gasifier to improve the fuel conversion. With cocurrent flow, the temperature of the product gas is high (N 2700°F) and necessitates heat recovery from the gases to achieve good process thermal efficiency. Heat recovery is complicated by the presence of solids and, in some cases, by molten ash particles which must not be allowed to contact heat transfer surfaces. On the positive side, the overall energy production rate per unit volume of reactor is greater than in a fluidized-bed or fixed-bed system.

There are several gasifier systems having sufficient commercial operating experience to serve as a basis for modern gasifier design. These include:

- Koppers-Totzek
- Babcock & Wilcox

Coal Preparation/Pretreatment

Coal pretreatment plays a significant role in the overall gasification scheme and directly affects gasifier performance and operation. The primary function of coal pretreatment is to supply a coal feedstock which satisfies the physical specifications of

the gasification operation. Coal handling equipment and storage areas will be required; grinding and screening equipment may be required depending on the match between the run-of-mine coal and the requirements of downstream processing operations. Depending on the specific gasifier design chosen, the basic pretreatment sections required might include:

- Crushing and sizing
- Pulverizing
- Drying/partial oxidation
- Briquetting

Crushing/Sizing

Crushing and sizing steps are required to produce coal in the size required for gasifier feed. Crushing systems are used for fixed bed gasifiers for which particle size requirements are in the 0.1-2.0 inch range. The system is designed for size reduction and the elimination of over and undersize coal particles.

Equipment types would involve double and single roll crushers, rotary breakers, impactors and cage mills. These are all stock type equipment and readily available. Sizing of particles in the larger than two-inch range would utilize grizzly screens, while medium size particles ($>$0.08 in.) would be sized by oscillating screens.

The operation of this equipment in an optimum mode is important because gasifiers are more sensitive to changes in particle size than direct combustion systems. Crushing and sizing can be performed at the mine site as well as at the plant.

Pulverizers

Pulverizers are required for fluid or entrained bed gasifiers and the pulverization step is performed on-site. Equipment used consists of hammer mills, cage mills, impactors and ball mills. As with the grinding equipment, these machines are used in direct combustion processes and are easily obtainable.

Drying/Partial Oxidation

These two processes generally involve contacting coal with hot gases. Coal drying is desirable when the moisture content of the coal is so high that the efficiency of the gasification process would be adversely affected if the coal were fed directly to the gasifier. Partial oxidation is used to reduce the caking tendency and increase the softening temperature of the coal feedstock. This process is needed to prepare some coals for certain fixed and fluid bed gasifiers that are unable to handle caking coals. The oxidation is performed under controlled conditions such that most of the volatile matter is retained.

Briquetting

In this process, coal fines are compacted into briquetts of sizes which are suitable for feed to a fixed bed gasifier. The coal fines are fed between a pair of mated rolls with recessed surfaces. The fines are compacted in these recessed areas as the rolls come together. In some instances, a binder such as asphalt or tar may be required to give the briquett sufficient structural strength. In addition, the briquett may need to be baked for additional strength.

Purification of Coal Gasification Products

Following coal gasification, it is usually necessary to remove undesirable constituents such as particulates, tars, oils, and acid gases from the raw product gas. The performance specifications for each of these operations depend on the intended end use of the product gas. Some basic product gas specifications for various end uses are summarized in Table 2.4-4. Typical particulate and H_2S ranges for the raw gas stream are shown also.

Particulate Removal

Removal of coal dust, ash and tar aerosols entrained in the raw product gas leaving the gasifier is the primary function of this process step. Specific techniques commonly used are:

TABLE 2.4-4

PRODUCT GAS SPECIFICATIONS FOR LOW/MEDIUM-BTU GAS

	Particulates		H_2S	Other
Typical Raw Gas Composition	1-300 gr/SCF		0.2-1.5 vol %	
Product Gas Specifications:				
Direct Combustion	Comply with NSPS for stack gas.		Comply with NSPS for stack gas.	
	Size	Concentration		
Gas Turbine	<2 μm	<0.01 gr/SCF	Less than 100 ppmv total sulfur	Total alkali metals less than 0.040 ppm
	<2 μm	0.0001 gr/SCF		
	<10 μm	None		
Chemical Synthesis or Reducing Gas	Essentially particulate free		Essentially sulfur free (<4 ppmv H_2S)	Limits for other components, e.g. NH_3 will vary.

NSPS = New Source Performance Standards

- Cyclones
- Electrostatic precipitators (ESP)
- Water or oil scrubbers

As was shown earlier in Table 2.4-2, cyclones are used as an initial cleanup step on all of the commercial gasifiers which are currently operating in this country. The popularity of cyclones stems from the fact that they are relatively inexpensive, low energy consuming devices. Unfortunately, they are effective in removing only the larger particulates; other techniques are necessary to achieve efficient removal of small particulates. For example, cyclone collection efficiencies for removing 10 micron particles from a 1000°C (2000°F) gas stream have been reported to be 90%, while the efficiency for removing one micron particles is only about 40%.

Extremely small particles (one micron or less) can be removed from the raw gas stream only by using more costly and more energy-intensive devices such as electrostatic precipitators and/or wet scrubbers (which also serve to quench and cool the product gas). Collection efficiencies of over 99.9% have been reported in removing particulates from a raw gas produced by a Kopper-Totzek gasifier using an ESP/wet scrubber in combination.

When extensive cooling of the raw gas is not necessary to meet temperature constraints on the acid gas removal process, it is not particularly useful to use wet scrubbers. For example, an end use involving the direct combustion of the gas may not require sulfur removal to meet sulfur emission requirements. Because the use of a wet scrubber lowers the temperature of the raw gas stream, the overall process thermal efficiency is reduced. In the final analysis, the increased cost of obtaining additional particulate removal at this point must be balanced against operating cost savings which result from decreased particulate loadings in subsequent process steps.

A summary of gas purification equipment used in a variety of commercial and demonstration coal gasification plants was given in Table 2.4-2. This table gives some indication of how the types of gas purification equipment used are dictated by the end use of the product gas and by the gasifier and feed coal type. For example, fuel gas produced by gasification of anthracite coal usually requires only particulate removal, because of the low sulfur content of this fuel and the negligible quantities of tars

produced. The gasification of bituminous coal or lignite produces more tars and usually more sulfur compounds than does the gasification of anthracite. The need to remove these compounds, and the extent to which they must be removed, is again dictated by the end use; fuels used in direct combustion may require only limited particulate removal while those used as synthesis gases must be further purified.

All particulate removal processes produce a solid waste consisting mainly of the collected particulates (unreacted coal fines and ash). Liquid effluents are also produced from wet scrubbers in the form of blowdown liquids and other materials condensed or scrubbed from the raw gas. These liquids will require considerable treatment to remove dissolved and suspended organics and inorganics prior to disposal or reuse. The composition and quantities of these liquids will depend upon the nature of the raw gas and the scrubbing process employed.

Gas Quenching and Cooling

In gas quenching and cooling, tars and oils are condensed and particulates and other impurities such as ammonia are scrubbed from the raw product gas. Quenching involves the direct contact of the hot raw gas with an aqueous or an organic quench liquor. Extensive cooling of the gas stream occurs primarily through vaporization of the quenching medium. Further gas cooling can be accomplished using waste heat boilers followed by air-and/or water-cooled heat exchangers.

The choice of gas quenching and cooling processes to be used depends upon the nature of the hot raw gas and whether or not an acid gas removal process will be needed. Waste heat recovery is always desirable, but fouling problems due to tar and oil condensation in the waste heat boiler must be considered. In addition, it may be necessary to remove tar and oil constituents from the gas prior to treatment in an acid gas removal process to prevent contamination of the solvent. The amount of cooling required is dictated by temperature constraints of the acid gas removal process.

Gas quenching and cooling is a source of liquid effluents and solid wastes. The liquid effluents consist of the quench liquor and the tars and oils condensed in the quenching process. The composition and amounts of these tars and oils depends on gasifier process considerations (coal type, pressure, temperature, etc.) and the nature

of the quenching medium (i.e., water or light oil). The amount of condensate produced is directly affected by the temperature to which the gas is cooled. This liquid effluent stream, typically referred to as a tarry gas liquor, requires extensive treatment prior to reuse or disposal).

Solid wastes generated in the quenching and cooling module primarily consist of coal dust and ash, suspended in the liquid effluents.

Acid Gas Cleanup

Acid gases, such as H_2S, COS, and CS_2, must be removed from the raw product. Processes used for acid gas removal may remove both sulfur compounds and CO_2 or they may be operated selectively to remove only the sulfur compounds in cases where carbon dioxide removal is not required to meet product gas specifications. For example, it would not be desirable to remove CO_2 from a pressurized, combined-cycle feed gas.

There are two reasons for removing sulfur compounds from low/medium-BTU gases. One is to meet the emission regulations for a utilization process such as direct combustion. The other is to meet product gas specifications which are dictated by the end use of the gas. In this section the acid gas cleanup (AGC) processes which appear to be best suited to low/medium-BTU gas cleanup needs are identified and compared.

Processes used for acid gas removal may be divided into two general categories:

- High-temperature processes requiring minimal cooling of the feed gas before treatment.

- Low-temperature processes requiring extensive cooling of the feed gas before treatment.

Each of these general categories is discussed below. Major emphasis is placed on low temperature processes because the high temperature processes mentioned are generally still in early stages of development.

High-Temperature Processes. Presently, there are no commercially available processes for removing acid gases from raw low-BTU gas at a high temperature (300°F). Processes currently under development involve the use of molten salts, molten metals, iron oxide, and dolomite as hot sorbents. The specific developers of these processes are:

- Bureau of Mines (Iron Oxide)
- Babcock and Wilcox (Iron Oxide)
- Conoco (Dolomite)
- Air Products (Dolomite)
- Battelle Northwest (Molten Carbonate)
- IGT-Meissner (Molten Metal)

High temperature acid gas removal, if feasible, would have several advantages over existing low temperature processes. The most significant of these is the higher overall thermal efficiency which would result from the retention of the sensible heat in the raw gas. Another potential advantage is the improvement of gas heating value due to the reduced condensation of combustible mid-boiling range hydrocarbons. Cooling equipment fouling by tars and oils could be minimized or eliminated also.

Due to these advantages, much research and development effort in the acid gas removal area has been aimed at developing high temperature processes. These high temperature processes will probably be tested initially in second generation combined-cycle power generation systems.

Low Temperature Processes. For purposes of this discussion, AGC processes that operate below (300°F) are defined as low-temperature processes. Processes of this type are widely available, having been used in both the natural gas and chemical process industries. The low-temperature processes considered here can be further divided into the following categories:

- Physical solvent processes
- Chemical solvent processes
- Combination chemical and physical solvent processes
- Direct conversion processes
- Catalytic conversion processes
- Fixed-bed adsorption processes

Table 2.4-5 presents the development of low-temperature AGC removal processes.

Physical Solvent Processes. These processes remove acid gases from the raw product gas by physical absorption in an organic solvent. They operate at high pressures in order to increase the solubilities of acid gases in the solvents. Most of the solvents used have an appreciably higher affinity for H_2S than for CO_2, and can therefore be used in a manner that allows for selective removal of H_2S.

Chemical Solvent Processes. Here acid gases are removed by forming chemical complexes. In most of these processes the solvent is regenerated by thermal decomposition of the chemical complex. These processes are generally identified by the type of solvent used. Amine, ammonia, and alkaline salt solutions are the three solvents in common use.

Combination Chemical/Phsyical Solvent Processes. These processes use a physical solvent together with an alkanolamine chemical solvent additive. The physical solvent absorbs acid gases such as CS_2, mercaptans, and COS, which are not easily removed by chemical solvents, while the chemical solvent removes the bulk of the CO_2, H_2S, and HCN.

Direct Conversion Processes. Here elemental sulfur is produced from H_2S by oxidation. Some of these processes, such as the Claus and Stretford processes, are not classified as acid gas removal processes in this report; however, they could be used as such. Direct conversion processes are divided into two general categories; dry oxidation and liquid phase oxidation.

Catalytic Conversion Processes. Catalytic conversion processes are divided into two categories: (1) those that convert organic sulfur to H_2S, and (2) those that convert organic sulfur and H_2S to SO_2. Most of these processes are generally not considered to be acid gas removal processes; however, they can be used to convert hard-to-remove acid gases such as COS, CS_2, and mercaptans into compounds such as H_2S and SO_2, which can then be handled by other acid gas removal processes.

TABLE 2.4-5

LOW-TEMPERATURE ACID GAS REMOVAL PROCESSES

Process Category	Process Name	Status
Physical Solvent	Selexol	Commercial
	Fluor solvent	Commercial
	Purisol	Commercial
	Rectisol	Commercial
	Estasolvan	Commercial
	Union Oil	Under Development
Chemical Solvent		
- Amine Solvent	Monoethanolamine (MEA)	Commercial
	Diethanolamine (DEA)	Commercial
	Triethanolamine (TEA)	Commercial
	Methyldiethanolamine (MDEA)	Commercial
	Glycol-amine	Commercial
	Diisopropanolamine (DIPA)	Commercial
	Diglycolamine (DGA)	Commercial
- Alkaline Salt Solution	Caustic Wash	Obsolete
	Seaboard	Obsolete
	Vacuum Carbonate	Obsolete
	Hot Potassium Carbonate	Commercial
	Catacarb	Commercial
	Tripotassium Phosphate	Obsolete
	Benfield	Commercial
	Alkazid	Commercial
	Sodium Phenolate	Obsolete
	Lucas	Commercial
- Ammonia Solution	Chemo Trenn	Commercial
	Collins	Commercial
Combination Chemical/Physical Solvent	Amisol	Commercial
	Sulfinol	Commercial
Direct Conversion		
- Dry Oxidation	Iron Oxide (Dry Box)	Commercial
	Activated Carbon	Commercial
	Claus	Commercial
	Great Lakes Carbon Co.	Under Development
- Liquid Oxidation	Burkheiser	Obsolete
	Ferrox	Obsolete
	Konox	Under Development
	Gludd	Obsolete

TABLE 2.4-5 (Cont.)

LOW-TEMPERATURE ACID GAS REMOVAL PROCESSES

Process Category	Process Name	Status
- Liquid Oxidant (Cont.)	Manchester	Obsolete
	Cataban	Pilot Plant
	Thylox	Obsolete
	Giammarco-Vetrocoke	Commercial
	Fischer	Commercial
	Staatsmijnen-Otto	Commercial
	Autopurification	Commercial
	Perox	Obsolete
	Stretford	Commercial
	Takahax	Commercial
	CAS	Pilot Plant
	Townsend	Pilot Plant
	Wiewiorowski	Pilot Plant
	Sulfonly	Pilot Plant
	Nalco	Pilot Plant
	Sulphoxide	Pilot Plant
	Permanganate and Dichromate	Commercial
	Lacey-Keller	Pilot Plant
	Sulfox	Pilot Plant
	Direct Oxidation	Commercial
Catalytic Conversion		
- Organic Sulfur to H_2S	Carpenter Evans	Commercial
	Peoples Gas Co.	Commercial
	Holmes-Maxted	Commercial
	British Gas Council	Pilot Plant
	Iron Oxide Catalysts	Commercial
	Chromia-Aluminum Catalysts	Pilot Plant
	Copper-Chromium-Vanadium	Pilot Plant
	Oxide Catalysts	Pilot Plant
	Cobalt Molybdenum Catalysts	Commercial
- Organic Sulfur to H_2S and SO_2	Appleby-Frodingham	Commercial
	Katasulf	Commercial
	North Thames Gas Board	Commercial
	Soda Iron	Commercial
Fixed-Bed Adsorption	Activated Carbon	Commercial
	Haines	Pilot Plant
	Molecular Sieve	Commercial
	Zinc Oxide	Commercial

Fixed-Bed Absorption Processes. These processes remove acid gases by adsorption on a fixed sorbent bed. The amount of acid gases removed depends on the surface area available for adsorption. Regeneration of the sorbent is accomplished by thermal methods or by chemical reaction.

The low temperature AGC processes identified in Table 2.4-5 hae been evaluated by a number of organizations and by various EPA groups and contractors[1]. The basic goal in all cases was to identify those processes which have high probability of near term application in low/medium BTU gasification plants. The following areas were evaluated with respect to low/medium BTU systems:

- Applicability
- Development status
- Environmental impacts
- Energy requirements
- Costs
- Process limitations

The criteria listed above were applied to low-temperature acid gas removal systems in the following manner:

Applicability to low/medium-BTU gasification. Those processes were eliminated which are not capable of reducing acid gas concentrations to levels meeting specific end use specifications and which are not capable of operating successfully in coal gasification systems. At present, only two processes, Rectisol and Benefield, have been used in commercial coal gasification processes. However, many other processes have been operated successfully in the natural gas and petroleum refining industries and should be technically acceptable for removing acid gases from coal gasification product gas.

Development status. This criterion note whether a process is under development, commercially available, or in declining use. Only those processes which are currently commercially available were given detailed consideration.

Environmental impacts. Environmental considerations involve characterizing the discharge streams from each process and investigating potential control technologies for the hazardous constituents in those streams. There are commercially available techniques for controlling all of the discharge streams from those processes which appear to be applicable to low/medium-BTU gasification.

Energy requirements. Processes requiring excessive amounts of energy or special utilities were eliminated from further consideration in this analysis.

Costs. Costs were not used in this study as a basis for the elimination of any acid gas removal processes.

Process limitations. Process limitations with respect to unusual raw materials requirements, and sensitivity to variations in feedstock and operating parameters, are important considerations in the selection of a process. These limitations can take several forms, including unfavorable economics and process operating problems. For example, certain compounds which may be present in the raw gas can cause solvent degradation. This is both an economic and operating problem, because of the cost of replacing the solvent and because the degradation products may adversely affect the process performance. Another example of an operating parameter limitation is the high acid gas partial pressure required for economical operation of physical solvent processes.

Promising Processes

Using the criteria described above, the following were identified as processes having the greatest likelihood of near-term commercial applications for low/medium BTU gas cleanup.

- Physical Solvent Processes
  - Rectisol
  - Selexol
  - Purisol
  - Estasolvan
  - Fluor Solvent

- Chemical Solvent Processes
  - MEA
  - MDEA
  - DEA
  - DIPA
  - DGA
  - Benfield

- Combination Chemical/Physical Solvent Processes
  - Amisol
  - Sulfinol

- Direct Conversion Process
  - Stretford

The primary acid gas removal processes just discussed are compared in Table 2.4-6 with respect to:

- Control effectiveness
- Ability to operate selectively (removal of H_2S)
- Utility requirements
- Discharge streams requiring further control
- By-products
- Process limitations

The following summarizes the major conclusions derived from the information in the table.

Control effectiveness. Control effectiveness is reported in Table 2.4-6 as the percentage removal of an input species that can be achieved by the process. In some cases, a compound may be removed but in a nonregenerable manner. This is indicated in the table by the symbol (D) indicating solvent degradation. An example of this is the removal of COS, CS_2, and R-SH with the MEA process. All of the processes can meet the most stringent H_2S product gas specification of 4 ppmv or less and most can meet a CO_2 specification of less than 1.0 vol. %.

TABLE 2.4-6

COMPARISON OF LOW TEMPERATURE ACID GAS CLEANUP PROCESSES

	Chemical Solvent Processes					
Control Effectiveness	MEA	MDEA	DEA	DIPA	DGA	Benfield
H_2S	99.9+%	99.9+%	99.9+%	99.9+%	99.9+%	99.9+%
CO_2	99+%	99+%	95+%	DNA	99+%	99.9+%
COS/CS_2	D	DNA	90-99%	DNA	D	75-99%
R-SH	D	DNA	DNA	DNA	D	68-92%
HCN	DNA	DNA	DNA	DNA	D	99+%
NH_3	DNA	DNA	DNA	DNA	DNA	DNA
Selective Operation (H_2S only)	DNA	yes	DNA	yes	DNA	yes
Operating Requirements						
Steam	x	x	x	x	x	x
Electricity	x	x	x	x	x	x
Cooling Water	x	x	x	x	x	x
Fuel Gas						
Chemicals						x
Discharge Streams Requiring Further Control						
Gaseous	x	x	x	x	x	x
Aqueous	x	NR	NR	NR	x	x
Solid	NR	NR	NR	NR	NR	NR
By-Products	NR	NR	NR	NR	NR	NR
Limitations:	Organic compounds degrade solvent	Corrosion problems greater than MEA	Corrosion problems greater than MEA		Organic compounds degrade solvent	

NR = None Reported
DNA = Data not available
D = Solvent Degrades
X = Discharge present or utility required

TABLE 2.4-6 (Cont.)

COMPARISON OF LOW TEMPERATURE ACID GAS REMOVAL PROCESSES

	Physical Solvent Processes					Combination Processes	
	Rectisol	Selexol	Purisol	Metasolvan	Fluor Solvent	Sulfinol	Amisol
Control Effectiveness							
H_2S	99.9+%	99.9+%	99.9+%	99.9+%	99.9+%	99.9+%	99.9+%
CO_2	99.9+%	99.9+%	99.9+%	99.9+%	99.9+%	99+%	99+%
COS/CS_2	99.9+%	99.9+%	99+%	98+%	DNA	90+%	99+%
R-SH	99.9+%	99.9+%	DNA	97+%	DNA	90+%	DNA
HCN	DNA	DNA	DNA	DNA	DNA	DNA	DNA
NH_3	DNA	DNA	DNA	DNA	DNA	DNA	DNA
Selective Operation (H_2S only)	yes	yes	yes	yes	yes	yes	DNA
Operating Requirements							
Steam	x	x	x	x	x	x	x
Electricity	x	x	x	x	x	x	x
Cooling Water	x	x	x	x	x	x	x
Fuel Gas	x	x	x	x	x		
Chemicals	x	x	x	x	x		
Discharge Streams Requiring Further Control							
Gaseous	x	x	x	x	x	x	x
Aqueous	x	NR	x	NR	NR	NR	NR
By-Products	Naphtha	NR	NR	NR	NR	NR	NR
Limitations:	Low temp. retains heavy HC, high pressure	Retains heavy HC, high pressure	Retains heavy HC, high pressure	Retains heavy HC, high pressure	Retains heavy HC, high pressure	Solvent is expensive	

Selective H_2S removal. Most product gas utilization options require extensive desulfurization of the raw gas. The need for selective removal of H_2S (i.e. without, removing CO_2) depends on the end use of the cleaned, desulfurized gas. If the gas is to be used for combined cycle power generation, the removal of CO_2 is not desirable because it would reduce the amount of useful work which would be recovered in the gas turbine section. For simple combustion applications, removal of CO_2 will increase the heating value of the gas. However, this advantage must be weighed against the added cost of removing the CO_2.

Utility requirements. Entries in this section of the table indicate utility requirements. This can be important in process selection as some utilities may not be readily available at all sites. The presence of a check ( ) indicates a utility required by the process. These utility requirements have not been quantified.

Discharge streams requiring further control. This section indicates the presence of discharge streams, gaseous, aqueous, or solid which require further control prior to disposal. All of these processes produce gas streams which must be treated further to remove H_2S and other sulfur compounds before the streams may be discharged to the atmosphere. While most of the processes do not report an aqueous effluent stream, all require periodic solvent blowdown to prevent buildup of contaminants and solvent degradation products. Some of the processes, such as Rectisol and Purisol do produce a condensate or blowdown stream which will require further treatment prior to disposal. Solid wastes removed from these processes would include coal fines and ash entrained in the process gas feed and solvent degradation products. These wastes will be contained in the solvent blowdown stream.

By-products. In this entry, by-products from the acid gas removal processes are shown. While only one process, Rectisol, is known to produce a naphtha by-product, many of the other processes should produce similar by-products when used in coal gasification systems.

Process limitations. In this section, major process limitations specific to each process are briefly listed. In some cases these limitations may be serious enough to eliminate the process from consideration for a particular application. For example, if the gas to

be treated contains large amounts of organic sulfur compounds (150 ppmv), serious consideration must be given to the economics and potential operating problems which may occur if the MEA process is selected. In other cases, the limitation may present a problem which is not serious enough to eliminate a process. For example, the corrosion problems which have been experienced with the DEA and other processes may be eliminated by a careful selection of construction materials.

Another limitation which affects AGC process selection is the pressure of the cooled gas stream. Low pressure, less than (250 psia), eliminates physical solvent processes from prime consideration because they require significant acid gas partial pressures to be economical. At pressures greater than 250 psia, all of the processes can be used succuessfully.

ENVIRONMENTAL CONSIDERATIONS

All gasifiers produce various air, water, and solid waste streams that must be controlled or disposed of in an environmentally acceptable manner. Discussion in this section is limited to emissions and waste streams from the gasifier itself and any primary (particulate, tar, tar oil) gas cleaning steps. The product gas stream will contain, in the form of hydrogen sulfide, most of the sulfur originally present in the coal. Purification of the product stream when necessary to remove acid gases has been covered the section entitled, Purification of Coal Gasification Products.

Air Emissions

Air emissions from a gasification facility generally result from the processes of feeding coal into, and removing ash from, the gasifier vessel. Other minor or intermittent sources may be found, such as poke holes, used to insert rods for breaking up clinkers and inspecting the bed level. Screening and crushing operations during feed pretreatment produce coal dust which must be controlled and/or contained. In addition, gas emissions can be given off at two places on the gasifier. These are the bin or feed lock hopper vent and the ash hopper vent. The composition of these streams depends on the mode of operation, and the problem must be evaluated for each installation.

Coal Bin Gas

This gaseous discharge stream is created by the operation of the coal feed bin or lock hopper. When the valve at the bottom of the coal feed hopper is opened to allow coal to enter the gasifier some gas will blow by into the feed hopper. As the valve at the top of the coal feed hopper is opened to admit another charge of coal, this blow-by gas in the hopper may escape to the atmosphere. The composition of this stream is similar to the raw product gas. It may be collected using hoods, and either treated or injected into the air intake.

The quantity of gas emitted will be much greater for a high pressure gasifier, such as the Lurgi, than for a gasifier operating at near atmospheric pressure. The composition of the vent gas will then depend on the source of gas used for pressurization. This could be product gas, nitrogen, etc.

An entrained flow gasifier, such as the Koppers-Totzek, which uses pulverized coal, may require blanketing the feed bin with nitrogen to prevent coal dust explosions. The vent stream will also contain entrained coal dust, which can be removed with filters, cyclones, or scrubbers prior to venting the nitrogen to the atmosphere.

Ash Hopper Gas

This gas stream is discharged when the ash hopper is opened to dump accumulated ash. Emissions from this source could potentially contain any of the components found in the raw gas. Under normal operating conditions, this stream would consist mainly of steam plus air or oxygen, with traces of particulate material from the ash. If the ash is quenched prior to being dumped from the hopper, this gas stream could also contain any volatile compounds found in the quench water. If any hazardous components are present in significant concentrations, the ash hopper gas will have to be collected and then either recycled, incinerated, or passed through a scrubber prior to discharge.

The Winkler gasifier uses nitrogen to blanket the dry ash bin and prevent further reaction or combustion of the char in the ash. The vent stream will also contain some raw product gas or gases evolved from the hot char.

This vent stream may also contain entrained ash and droplets of quenching liquor or ash slurry. These solid and liquid contaminants can be removed with filters, cyclones, or scrubbers.

Liquid Wastes

Liquid wastes streams result from the processes of quenching and cooling the raw product gas and ash streams, and in some cases from scrubbing the product gas. Wastewater streams produced include process condenstate, gas quench liquor, and ash quench water.

Process Condensate and Gas Quenching Liquor

If a direct quench is used, this stream will be composed mostly of water. It consists of the raw gas scrubbing liquor plus raw gas condensate from waste heat boilers and indirect coolers. They are composed of approximately 95% water. Other components of these streams will be the constituents in the raw gas which condense or dissolve in the quench water. The components most likely to be present in this stream are:

Water	Ammonia
Tar	Hydrogen Sulfide
Tar Oil	Organic Sulfur Compounds
Naphthas	Thiocyanates
Phenols	Hydrogen Cyanide
Particulates	Trace Elements

The amounts of these components will depend on the raw gas composition and the gas quenching and cooling processes used. A complex water treatment system will be required to remove these contaminants and produce discharge water meeting federal environmental standards.

Ash which is washed out of the raw gas stream is separated from the quench liquor in a settler, but some ash particles may be carried along in this blowdown stream.

Phenols are some of the more troublesome constituents. Large gasifier installations using fixed bed gasifiers may require extensive dephenolization treatment using processes such as Phenosolvan, Koppers Light Oil Extraction, Barrett, Jones & Laughlin, etc. Entrained flow gasifiers operate at higher temperatures and produce a few phenols in the product gas.

Ash and Slag Quench Water

Ash quench water may be used for both cooling and ash transport. The composition of this stream will depend on the source of the water used. Generally, the gas quenching liquor is used to cool and transport the ash. Blowdown streams from other process units may also be used, however. In addition to the components present in these input streams, the ash quench water will also contain any of the components in the ash hopper gas which dissolve in the water, plus suspended ash particles. This water may be sent to evaporation ponds for disposal, but air emissions may result from volatile components. Ash can be separated from the quench liquor in a settler. The bottom product removed from a settler will be an ash slurry, containing approximately 25% to 35% solids. The ash in the slurry will consist of the mineral matter present in the feed coal plus any unreacted carbon. Water recovered in solids removal processes could be recycled to the process condensate and gas quenching liquor. The dewatered ash or ash slurry is a waste product requiring ultimate disposal. Ash slurry may be combined with the dry ash prior to disposal.

Liquid By-Products

Fixed bed gasifiers will produce a complex mixture of tars and tar oils along with the product gas. The heating value of these constituents may represent as much as ten percent of the total gasifier output. When recovered from the process condensate and gas quenching liquor, these tars and tar oils may be sold as feedstock to coal tar refineries, or burned as fuel. In some cases it is possible to inject them back into the gasifier and recycle them to extinction.

Other types of gasifiers operating at higher temperatures do not produce these troublesome by-products. Single-stage fixed bed gasifiers will produce a high temperature tar which often condenses in the gas mains and must be cleaned out periodically. Two-stage gasifiers generally produce a lighter tar and tar oil, which is more easily recovered.

Solid Wastes

The chief solid waste produced in gasification is the coal ash. Ash consists mostly of the mineral matter in coal, plus some unreacted carbon. The unreacted carbon content can range from less than one percent for a fixed bed gasifier under certain conditions, to five percent and up for entrained flow, to 10-30% for a fluidized bed. In the last case, the ash may contain enough carbon to be salable as a by-product fuel. Or it may be recycled to the gasifier. The exact composition of the ash depends on the composition of the feed coal, the gasifier design, and the operating conditions.

The physical form of the ash varies from fine particles of dry ash to chunks of slag, depending on gasifier type and on how the ash is quenched and removed.

If a cyclone is used for particulate removal, this stream will be composed of small, hot particles of coal, ash and tar which are removed from the raw gas. Any of the heavy solid or liquid constituents present in the raw gas could potentially be present in this stream. Coal fines may be sent to disposal with the gasifier ash, recycled to the gasifier coal feed in a briquett form, or burned as a fuel, depending on the carbon content.

Ash from the gasifier is a solid waste product which requires ultimate disposal. It may be separated from the quenching water and then disposed of in a landfill so as to prevent contamination of groundwater and runoff water.

Specific emission factors have not been generated for coal gasification plants as they have for combustion processes. In all cases to date, a preliminary design has been required to estimate potential emission. However, it has been shown that gasification plants can be designed to meet required environmental standards. A major consideration involves the impurities in the final product gas, and there affect on emissions during combustion. Using the gas cleanup methods previously described, a clean gas

free of particulates, H_2S and other trace contaminants can be produced which will allow combustion of this gas within emission limits.

THE PACE COMPANY CONSULTANTS & ENGINEERS, INC. 5251 WESTHEIMER
P.O. BOX 53473 HOUSTON, TEXAS 77052 AC 713 965-0311 CABLE: PACECO-HOUSTON TELEX 77-4350

PREFERRED ENERGY SOURCE

PREFERRED ENERGY SOURCE

Refinery by-product gas (including Flexicoker low-BTU gas) is the major fuel source planned for the ALPETCO refinery and accounts for 97 percent of the total refinery energy supply. Table 3-1 lists the refinery fuel gas sources and their quantity. These gases are produced in the cracking, hydrotreating and flexicoking operations. The preferred disposition of these gases is refinery fuel. There is no current market for LPG near the ALPETCO refinery. The recovery, purification and separation of the by-product gases into marketable products would be prohibitive due to the fluctuations which will occur in composition and quantity of these gases.

TABLE 3-1

REFINERY FUEL GAS SOURCES

Description	Quantity MMBTU Per Day
Fuel Gas	48,372
Flexicoker Low-BTU Gas	20,496
Propane	10,115
TOTAL	78,983

Combustion technology for burning refinery by-product gases is highly developed so that design of process heaters to handle these gases will not present a problem. In addition, presently available control technology can control pollutant emissions to meet applicable air quality standards.

Other competing sources of fuels evaluated for the ALPETCO refinery are direct coal combustion; low BTU gas produced by gasification of coal; and liquid fuels produced in the refinery.

Direct coal combustion for the ALPETCO refinery could supply the energy needed only for electricl power and steam generation because the technology for combustion in process heaters has not been demonstrated. Energy needed for electrical power and steam generation represents 28 percent of total refinery energy needs. The technology for control of emissions resulting from the handling, burning and disposing of waste streams for coal-fired industrial boilers exists, although the resulting emissions will be significantly greater than from burning refinery fuels.

Direct coal combustion is not considered to be the best fuel for the refinery. In addition to the higher emissions a number of other obstacles remain for use of coal. In order to supply the ALPETCO refinery with coal, the capacity of the Usibelli mine would have to be doubled or a new mine opened in another area; the existing railroad would have to be upgraded to handle unit trains; and coal receiving and handling facilities for barge transport would have to be installed. Coal would be a more expensive fuel for the refinery than using by-product oil and gases.

Gasification of coal to produce low or medium BTU gas is technically feasible for the ALPETCO refinery and could replace refinery by-product gas, propane and clarified oil in the fuel system. However, this alternative fuel source is faced with the same problems as direct combustion of coal related to source availability, transportation, cost, and environmental emissions.

The ALPETCO refinery's planned fuel system will use a very small amount of liquid fuel to supply refinery energy needs. Approximately 2.2 billion BTU per day or 335 barrels per day of hydrotreated gas oil will supplement the refinery fuel system which represents 3 percent of the total refinery energy demand. The technology for burning liquid fuels is highly developed.

Selection of the hydrotreated (desulfurized) gas oil stream to supply refinery energy needs was based on a tradeoff between value of the stream and environmental (sulfur content less than 0.3 weight percent) considerations. The use of the stream does reduce the amount of saleable refinery products; however, due to the small quantities involved and other considerations such as

availability of supply, environmental desirability, and relative interchangeability with refinery fuel gas, it is felt to be the most logical supplemental fuel supply.

THE PACE COMPANY CONSULTANTS & ENGINEERS, INC. 5251 WESTHEIMER
P.O. BOX 53473 HOUSTON, TEXAS 77052 AC 713 965-0311 CABLE: PACECO-HOUSTON TELEX 77-4350

AIR QUALITY STANDARDS COMPLIANCE

AIR QUALITY STANDARDS COMPLIANCE

4.4.3.1 GENERAL DEFINITIONS

Since the ALPETCO refinery is located in an attainment area, there are three main provisions of the Clean Air Act Amendments of 1977 which apply:

- New Source Performance Standards (NSPS)
- Prevention of Significant Deterioration (PSD)
- National Ambient Air Quality Standards (NAAQS)

The National Emission Standards for Hazardous Air Pollutants (NESHAPS) regulations do not presently apply to the ALPETCO refinery, since no products from the refinery are now regulated under this section of the act. However, benzene is likely to be regulated under the act in the near future and possibly toluene and xylene.

NSPS is a set of standards for specific processing units in the refinery. PSD regulations require the use of Best Available Control Technology (BACT) and provide for specific increments of degradation for sulfur dioxide and particulates. The NAAQS are standards which establish baselines above which pollution levels are hazardous to public health (primary standards) or public welfare (secondary standards).

4.4.3.2 NEW SOURCE PERFORMANCE STANDARDS

The ALPETCO refinery is controlled under the New Source Performance Standards (NSPS) for refineries, 40CFR60, Subpart J. The standards which apply to tank construction are Standards of Performance for Storage Vessels for Petroleum Liquids (Subpart K). In addition, a NSPS for Stationary Gas Turbines was proposed on October 3, 1977 and will be used as a guide for compliance. Subpart D contains the NSPS for steam generators.

4.4.3.2.1 NSPS - Petroleum Refineries

Below is a brief summary of the NSPS which applies to the ALPETCO refinery.

4.4.3.2.1.1 Particulate Matter

Standards - The NSPS requires that particulate matter from the burn-off in the catalyst regenerator in fluid catalytic cracking units not exceed 1.0 pounds per 1000 pounds of coke. The opacity of the gases cannot exceed 20 percent averaged over any five minute period.

Control - The Fluid Catalytic Cracking Unit (FCCU) will have an electrostatic precipitator to remove particulates from the flue gases so that the actual particulate emissions should remain well below the 1.0 pounds per 1000 pounds of coke burn-off. The precipitator will eliminate any opacity problems which might occur.

The CO boiler will use auxiliary fuel to supply the necessary heat input. It is anticipated that this fuel will be process gas. However, the boiler will be capable of accepting a liquid fuel. When this occurs the particulate emissions will not increase by more than 0.1 pounds per million BTUs heat input of liquid fuel. The additional particulates from the fuel oil combustion will not cause the boiler flue gas to exceed the NSPS standard.

4.4.3.2.1.2 Carbon Monoxide

Standard - The flue gas from the regenerator on the FCCU may not contain more than 0.05 percent (500 parts per million) carbon monoxide (CO).

Control - There are two acceptable methods of meeting the carbon monoxide limit in the regenerator flue gas: high-temperature regeneration or the use of a CO boiler. ALPETCO will employ high-temperature regeneration to reduce carbon monoxide emissions below 500 parts per million.

4.4.3.2.1.3 Sulfur Dioxide

Standard - Any fuel which is burned must not contain more than 0.1 grains of hydrogen sulfide per dry standard cubic foot (dscf). In addition, the offgas from the sulfur recovery facility must be 0.025 volume percent sulfur dioxide or less.

Control - ALPETCO will use an amine stripper to remove the hydrogen sulfide from the refinery fuel gas. The concentration of hydrogen sulfide will never exceed the average 0.1 grains per dscf. The hydrogen sulfide removed will be converted to elemental sulfur in a Claus plant. The gas from the Claus plant will be treated in a tail gas unit which is 99.8 percent efficient in the removal of sulfur dioxide, dropping the final concentration well below the 0.025 percent ceiling.

4.4.3.2.2 NSPS - Storage Vessels for Petroleum Liquids

4.4.3.2.2.1 New Source Standard

If the true vapor pressure of the stored material is above 570 millimeters of mercury [11.1 pounds per square inch absolute (psia)], NSPS requires that storage vessels utilize a vapor recovery system. If the vapor pressure is between 78 millimeters of mercury (1.5 psia) and 570 millimeters of mercury (11.1 psia), storage tanks are required to have a floating roof. If the vapor pressure is below 78 millimeters of mercury (1.5 psia), no NSPS applies. This standard applies to all tanks of at least 40,000 gallons capacity.

4.4.3.2.2.2 Hydrocarbon Storage Controls

ALPETCO will store all products which have a vapor pressure above 570 millimeters of mercury (11.1 psia) in pressure vessels. The relief valves in these vessels will vent to the flare. All remaining hydrocarbons will be stored in cone roof tanks, with those materials having a vapor pressure above 78 millimeters of mercury having in addition an internal floating roof.

4.4.3.2.3 NSPS - Steam Generators

4.4.3.2.3.1 Nitrogen Oxides

Standards - The NSPS for nitrogen oxide emissions from steam generators greater than 250 million BTUs is 0.2 pounds per million BTUs if fired on gas and 0.3 pounds per million BTUs if fired on fuel oil.

Control - ALPETCO in using best available control technology will be using low nitrogen oxide burners with limited excess air. These controls reduce the nitrogen oxide emissions to 0.08 and 0.11 pounds per million BTUs for gas and fuel oil respectively.

4.4.3.2.3.2 Sulfur Dioxide

Standard - The sulfur dioxide NSPS for boilers is 0.8 pounds per million BTUs if fuel oil is fired.

Control - By burning distillate fuel oil which contains 0.3 percent sulfur, The emission rate will be 0.5 pounds per million BTUs.

4.4.3.2.4 NSPS - Stationary Gas Turbines

4.4.3.2.4.1 Nitrogen Oxides

Standards - This NSPS has been proposed but not yet promulgated. The proposed NSPS for nitrogen oxides states that any turbine under 1,000 horsepower will require no controls; 1,000 to 10,000 horsepower turbines will be limited to 150 parts per million nitrogen oxides; and turbines over 10,000 horsepower will be limited to 75 parts per million.

Controls - At present, ALPETCO does not plan to install any turbines over 10,000 horsepower. According to EPA's Research Triangle Park (RTP) office, 150 parts per million nitrogen oxides can be achieved with proper engineering design of the turbine. These proper engineering design considerations will be incorporated by ALPETCO when specifying turbines. If in the final design it becomes necessary to use turbines greater than 10,000 horsepower, ALPETCO will use water or steam injection to reduce the nitrogen oxides emissions to 75 parts per million maximum.

4.4.3.2.4.2 Sulfur Dioxide

Standards - The proposed NSPS would limit the sulfur dioxide concentration in the exhaust gas to 150 parts per million corrected to a 15 percent oxygen dry basis or would limit the sulfur content of the fuel to 0.8 percent by weight.

Controls - The refinery fuel gas to be burned in the turbines will be 0.1 grains of hydrogen sulfide per dscf as required by NSPS for refineries. Burning this gas in a turbine produces less than 150 ppm sulfur dioxide in the exhaust gas. All fuel oil burned in the refinery will be less than 0.8 percent to meet local sulfur dioxide requirements; therefore, the NSPS will not be exceeded.

4.4.3.3 BEST AVAILABLE CONTROL TECHNOLOGY (BACT)

Since Valdez is attainment for all pollutants governed by the Clean Air Act Ammendments of 1977, control standards are governed by the definition of Best Available Control Technology (BACT). BACT is defined in the Clean Air Act as:

> ". . . the maximum degree of reduction of each pollutant . . . taking into account energy, environmental, and economic impacts and other costs . . ."

In actual practice this definition has become essentially the best proven control in use unless considerable energy is wasted, emissions of other pollutants increase, or cost increases substantially.

Each abatement device and each application is reviewed on a case by case basis. Although there are some standard devices which are commonly accepted as BACT for a refinery, other pollution control equipment may be substituted if it shows a considerable cost saving or is as effective in reducing pollution.

4.4.3.3.1 BACT for Combustion Equipment

4.4.3.3.1.1 Combustion Fuel Alternatives

There are four alternate fuels which ALPETCO could use in combustion equipment. They are:

- Coal
- Residual Fuel Oil
- Distillate Fuel Oil
- Refinery Fuel Gas (Process Gas)

Table 4.4.3.3.1-1 shows the relative uncontrolled emission factors on a pound per million BTU basis using AP–42 as the source.

TABLE 4.4.3.3.1-1

AP-42* EMISSION FACTORS FOR FUEL ALTERNATIVES

Pounds per 10^6 BTUs

	TSP	SO_2	CO	NO_x	NMHC
Coal(0.2%S)	6.400	0.250	0.040	0.72	0.012
Resid(0.7%S)	0.067	0.740	0.033	0.40	0.007
Distillate(0.3%S)	0.014	0.150	0.036	0.16	0.007
Process Gas (0.1 gr H_2S/dscf)	0.010	0.023	0.017	0.12	0.003

* Compilation of Air Pollution Emission Factors, AP-42, U.S. EPA Office of Air and Waste Management, Office of Air Quality Planning and Standards, Research Triangle Park, August, 1979.

Of these four alternatives, coal and residual fuel were eliminated as possible refinery fuels. Coal is the least desirable from an environmental standpoint. A detailed discussion of the environmental effects of burning coal and the various means of control which would have to be applied is given in section 4.4.2.2.2, Environmental Considerations. Even with the addition of more expensive particulate removal devices (i.e., scrubbers, the most common BACT requirement for sulfur dioxide control for low sulfur coal), the emissions would only be reduced to the equivalent of uncontrolled fuel oil emissions.

Residual fuel oil is also an undesirable option for the ALPETCO refinery. The configuration of the refinery is designed to make low BTU gas in the Flexicoker from vacuum residuum. The sulfur in this gas is removed in an amine stripper. There are no residual desulfurization facilities planned for the refinery, since residual desulfurization facilities are extremely expensive and would not be installed solely to produce refinery fuel.

Without desulfurization ALPETCO cannot make 0.7 percent sulfur residual fuel oil. A local ordinance which takes effect January 1, 1981, will forbid the burning of greater than 0.7 percent sulfur resid in port-related facilities, and these requirements would apply to the refinery.

ALPETCO will burn process gas as the major fuel source. Only in cases where gas make is insufficient to provide refinery fuel needs will distillate fuel oil be used. This situation would occur when a fuel gas producing unit is operating at a low throughput or is shut down. The worst case would most likely be when the Flexicoker, the major source of process gas, is shut down. Since the combustion equipment will be designed to fire both oil and gas, the emissions estimates were made assuming 100 percent firing on fuel oil as a worst case basis.

4.4.3.3.1.2 Particulate, CO, and Hydrocarbon Emission BACT Controls

Particulate, CO, and hydrocarbon emissions from the combustion system will be minimized by proper burner adjustment. An excess air monitor will be installed in the flue gas to regulate the burners. While the primary function of this monitor will be to reduce nitrogen oxides formation by limiting excess air, it will also prevent the burners from becoming oxygen starved. Insufficient oxygen increases the emissions in the form of unburned or partially burned hydrocarbons.

4.4.3.3.1.3 Sulfur Dioxide Control

Sulfur dioxide will be controlled by burning refinery process gas as the basic fuel. This gas has approximately one fourth the emissions as with fuel oil. Only when there is insufficient gas will supplemental distillate fuel oil be fired as mentioned above.

The distillate fuel oil will be FCCU cycle oil and will average less than 0.2 percent sulfur.

It is possible to further reduce sulfur dioxide emissions by scrubbing the flue gas from each combustion unit. However, the cost far outweighs the benefits. In a boiler or furnace of the size used in the Alpetco refinery, the capital cost would be $25,000 to $50,000 per ton of sulfur dioxide removed per year and the operating cost would be $2,000 per ton.

4.4.3.3.1.4 Nitrogen Oxides Control

Two nitrogen oxides reduction technologies will be used to limit nitrogen oxides emissions from combustion equipment. The excess air will be limited to less than 20 percent and low nitrogen oxides burners will be used.

Limiting excess air reduces the oxygen available for reaction with chemically bound nitrogen. It also changes the flame pattern, reducing thermal nitrogen oxides production. An oxygen analyzer will be installed to monitor the flue gas and control oxygen to 3 percent in the flue gas (15 percent excess air). To control the oxygen content much below this level would risk increasing the unburned or partially burned hydrocarbons emitted to the atmosphere. AP-42 estimates a 10 to 30 percent reduction in nitrogen oxides by limiting excess air. More recent studies (scheduled for publication by EPA in 1979) indicate the actual reduction to be closer to 10 percent.

Low nitrogen oxides burners reduce nitrogen oxides production primarily by changing the flame pattern such that the flame temperature is reduced. The lower flame temperature substantially reduces thermal nitrogen oxides formations. Several manufacturers produce burners which they claim reduce nitrogen oxides formation by 35 to 50 percent. The most recent independent data indicates that the lower of these two estimates is the more reasonable.

Other alternative nitrogen oxides control mechanisms were examined from conversations with various branches of EPA, boiler manufacturers and combustion consultants, and from search of available literature. There appear to be four other technologies applicable to reducing nitrogen oxides emissions from refinery combustion systems. They are listed below:

- Flue Gas Recirculation - The EPA Air Pollution Engineering Manual, AP-40, reports that recirculation of flue gas dilutes the flame and thereby reduces nitrogen oxides emissions by reducing the temperature.

- Ammonia Injection - A recently developed control method injects ammonia into the flue gas at carefully controlled temperatures. The ammonia reacts with the nitrogen oxides to form nitrogen and water.

- Tangential Firing - If burners are placed in the corners of the firebox and aimed at an angle to the diagonal, the flame pattern is such that much of the combustion occurs in a cooler yellow flame in the center of the firebox, reducing the thermal nitrogen oxides formed.

- Two-stage Combustion - By supplying less than stoichiometric quantities of primary air to the burners, substantial reduction in nitrogen oxides emission can be achieved. Complete combustion of the fuel is accomplished by injection of secondary air.

Although reported in AP-40, flue gas recirculation is generally unavailable. We know of no equipment manufacturer who offers flue gas recirculation as an option on larger utility plant boilers. The actual amount of nitrogen oxides reduction available from flue gas recirculation is poorly defined, especially if excess air is controlled. Estimates from boiler manufacturers varied from no reduction to a slight reduction.

Ammonia injection is still in the experimental stage. It is presently being tested extensively on large boilers in California, and while the preliminary results are extremely promising, the final report on the full-scale testing will take another three to six months according to EPA Region IX. This time frame is such that ammonia injection has not yet been adequately demonstrated to be considered BACT.

Both tangential firing and staged combustion are more common on large utility boilers than refinery-size combustion equipment. The installation of these nitrogen oxides reduction mechanisms is possible, but it is not common. The low nitrogen oxides burners are an improvement over these two older means of control. The effect of these control schemes in low nitrogen oxides burners has never been adequately defined. Since low nitrogen oxides burners provide about the same nitrogen oxides reduction as tangential firing and staged combustion and operate according to the same principles it is likely that the combination of the two would not provide a greater reduction in nitrogen oxides than would the low nitrogen oxides burners alone.

4.4.3.3.2 BACT for Sulfur Recovery

The sulfur recovery system is an amine stripper followed by a Claus plant. The only appreciable emission from the units is sulfur dioxide from the Claus plant. The sulfur dioxide emissions will be reduced with a tail gas recovery unit. There are not alternative controls which are as effective.

4.4.3.3.3 BACT for FCCU

The primary emissions are from the FCCU regenerator. As the coke burns off the catalyst, large quantities of particulates, carbon monoxide, sulfur dioxide, and nitrogen oxides are formed.

4.4.3.3.3.1 Particulate Control

The particulates emitted from the regenerator are composed primarily of catalyst fines with some incomplete combustion products. An electrostatic precipitator will be used to remove these fines. The precipitator will be more effective in TSP removal than most alternative abatement systems. The most common alternative, flue gas scrubbing, has about the same efficiency as an electrostatic precipitator.

4.4.3.3.3.2 Carbon Monoxide Controls

There are two commonly accepted means of controlling carbon monoxide emissions from an FCCU regenerator: high temperature regeneration and CO boilers. In high temperature regeneration temperatures of 1400°F are reached, thereby oxidizing the carbon monoxide to carbon dioxide. The CO boiler oxidizes carbon monoxide formed at lower temperatures in the regenerator to carbon dioxide in a boiler. Either method is equally effective in reducing CO emissions. ALPETCO will use high temperature regeneration for emissions control.

4.4.3.3.3.3 Sulfur Dioxide Controls

The most common BACT definition for sulfur dioxide is flue gas scrubbing. Flue gas scrubbing removes 90 percent of the sulfur dioxide in the flue gas if a caustic scrubber is used. ALPETCO intends to substitute FCCU feed desulfurization for flue gas scrubbing. Ninety-five percent of the sulfur will be removed from the distillate oil charged to the FCCU, reducing sulfur dioxide emissions from the regenerator by 95 percent. Thus, sulfur dioxide emissions from the FCCU will be less with feed desulfurization than with flue gas scrubbing.

4.4.3.3.3.4 Nitrogen Oxides Controls

There are no acceptable BACT definitions for control of nitrogen oxides from an FCCU. A search of literature and contact with EPA authorities indicated that there is presently no means of reducing nitrogen oxide emissions from a high temperature regeneration FCCU such as ALPETCO will be using.

4.4.3.3.4 BACT for Incinerator

The Alpetco refinery will utilize an incineration system to continuously collect, store, and simultaneously incinerate both sludges from the Wastewater Treatment Plant and process solid wastes from various sources. The incinerator will be a rotary kiln type utilizing dual burners to permit firing either refinery fuel gas or oil for auxiliary firing. The solid wastes which will be incinerated will be a mixture of spent clays, catalysts, and other solid material which will be removed from process equipment as it becomes spent. The intervals at which these solid wastes are removed from process equipment for incineration will vary with the degree of contamination, process throughput, and severity of operation. In general, these materials become spent at six month or longer intervals. In some cases, such as spent alumina, a three-year interval is expected. Sludges from the wastewater treatment system will be generated daily and will be collected, stored, and batch fed to the incinerator when sufficient material is available.

4.4.3.3.4.1 Particulate Control

The two sources of particulate emissions from the incinerator operation are products of combustion and fugitive dust from the transfer and storage of the solid wastes. Some reduction in particulate emissions from combustion will be realized by passing the incinerator offgases through an afterburner chamber. Wet scrubbing of the afterburner offgases will remove the remaining products of combustion.

Fugitive dust emissions will be controlled by storing those solid wastes which generate dust in one of the following manners:

- In closed containers
- By mixing with set sludges
- By maintaining the waste in a wet condition using either water fuel oil.

4.4.3.3.4.2 Hydrocarbon, Nitrogen Oxides, and Carbon Monoxide Control

The emissions of the combustion products hydrocarbons, nitrogen oxides, and carbon monoxide will be controlled by incorporating good engineering design and

maintaining adequate excess air in the combustion chambers. As with other combustion equipment in the refinery, low nitrogen oxides burners will be utilized. The afterburner chamber will ensure that no unburned or partially burned hydrocarbons or carbon monoxide will be released to the atmosphere.

4.4.3.3.4.3 Sulfur Dioxide Control

Sulfur dioxide emissions will be controlled by firing either low-sulfur fuel oil or refinery fuel gas. Scrubbing of the afterburner offgases will remove 90 percent of the sulfur dioxide which is released during combustion.

4.4.3.3.5 BACT for the Flare

ALPETCO will have a flare to dispose of hydrocarbon waste streams which exceed the capacity of the incinerator, such as during startup and shutdown. In addition, all emergency releases will go to the flare.

Emissions control will be accomplished using steam injection. Steam injection stimulates proper mixing of hydrocarbons and air to ensure complete combustion. Complete combustion eliminates particulates and carbon monoxide formation while preventing escape of hydrocarbons. In addition, steam injection dilutes the flame reducing the thermal nitrogen oxides production.

Knock-out drums will be provided upstream of the flarestack. These drums will remove any entrained liquids which could cause smoking and contribute to opacity violations.

4.4.3.3.6 BACT for Storage Tanks

Storage of hydrocarbons having a true vapor pressure greater than 570 mm Hg (11.1 psia) will be in a pressure vessel with the pressure relief valve discharging to the flare. Emissions from this system will be zero. If the true vapor pressure is less than 570 mm Hg (11.1 psia), but greater than 78 mm Hg (1.5 psia), the hydrocarbon will be stored in a cone roof tank with an internal floating roof. The internal floating roof reduces emissions to the equivalent of an external floating roof with a double seal. The double seal floating roof is defined as BACT. In tanks where the true vapor pressure of the hydrocarbons is less than 78 mm Hg, a cone roof without an internal floating roof will be utilized.

4.4.3.3.7 BACT for Fugitives

Fugitive emissions are those emissions which are not confined to a specific vent or stack. The only fugitive emissions within the ALPETCO refinery will be hydrocarbons. Since all roads will be paved, no fugitive TSP emissions will be generated.

4.4.3.3.7.1 Control of Leaks from Pipes, Valves and Flanges

Construction of piping, valves, pump and compressor systems will conform to applicable American National Standards Institute (ANSI), American Petroleum Institute (API), and American Society of Mechanical Engineers (ASME) codes. Underground pipelines in carbon compound service will contain no buried valves, flanges, or other similar piping connections to facilitate fugitive emission checking or monitoring. To the extent that safe operating practice will permit, valves and piping connections will be so located to be reasonably accessible for leak checking during plant operation.

All two-inch diameter and larger piping connections in carbon compound service will be welded or flanged. Welded connections will be used in preference to flanged connections wherever possible. Screwed piping connections will occur only on piping smaller than two-inch diameter. All piping connections will be hydrotested or gas tested at least at the maximum operating pressure of the process to ensure bubble-tight, leak-free performance.

All valves operated daily and in service on carbon compounds having an aggregate partial pressure or a vapor pressure of 1.5 psia or greater at the process conditions will be monitored by leak-checking for fugitive emissions at least monthly using conventional soap testing, carbon compound detector or other approved methods. All other valves in carbon compound service will be leak-checked at least once per calendar year.

All carbon compound waste gas from point sources such as process vents, relief valves, and analyzer vents will be routed to the flare, incinerator, or a recovery system.

4.4.3.3.7.2 Control of Leaks from Pumps

All pumps in carbon compound service with an aggregate partial pressure of 1.5 psia or greater will be equipped with double mechanical seals, tandem mechanical seals, or the equivalent such that emissions of carbon compounds to the atmosphere are prevented. Single mechanical seals will be used only where seal emissions are monitored with a carbon compound leak detector at least monthly. Damaged or leaking seals or seals found to be emitting carbon compounds will be replaced or repaired.

4.4.3.3.7.3 Control of Leaks from Compressors

New compressors will have the optimum sealing arrangement offered by vendors to minimize hydrocarbon leakage and conform to API codes.

4.4.3.3.7.4 Control of Leaks from Process Drains and Separators

All process drains will be trapped to prevent hydrocarbons from escaping. All oil/water separators will be covered.

4.4.3.3.8 BACT for Marine Terminal

4.4.3.3.8.1 Ballast Storage

By the time the ALPETCO refinery is operational, all incoming ships to United States ports will be required to have clean ballast tanks. Therefore, no special ballast treatment or storage will be required.

4.4.3.3.8.2 Marine Terminal Fugitives

All pumps, piping, flanges, valves etc. will conform to section 4.4.3.3.7, BACT for Fugitives.

4.4.3.4 AMBIENT AIR QUALITY STANDARDS

There are two kinds of air quality standards of concern to the ALPETCO refinery. The first is PSD increment consumption for sulfur dioxide and particulates, and the second is the National Ambient Air Quality Standards (NAAQS).

4.4.3.4.1 Increments

The air quality increments were designed to keep those areas which are relatively clean (areas which attain the NAAQS) from becoming polluted. In order to accomplish this, the amount of degradation of the air quality in these areas is limited. The allowable increases in pollution are termed increments and are given in Table 4.4.3.4.1-1 for Class II areas such as Valdez.

TABLE 4.4.3.4.1-1

CLASS II AIR QUALITY INCREMENTS

Pollutants	Maximum Allowable Increase ($\mu g/m^3$)
Particulate matter:	
Annual geometric mean	19
Twenty-four-hour maximum	37
Sulfur dioxide:	
Annual arithmetic mean	20
Twenty-four-hour maximum	91
Three-hour maximum	512

These increments are increases in ambient air concentration over a baseline concentration. The baseline concentration has a fairly complex definition but for Valdez it is equivalent to the concentration as of January 6, 1975. Since there has been no industrial construction since January 6, 1975 which would consume increment, the entire increment is available for the ALPETCO refinery.

4.4.3.4.2 National Ambient Air Quality Standards

EPA has established National Ambient Air Quality Standards (NAAQS) for sulfur oxides, particulate matter, carbon monoxide, photochemical oxidants/hydrocarbons, nitrogen oxides, and lead. These NAAQS are shown in Table 4.4.3.4.2 1.

Valdez presently attains all the primary and secondary standards. ALPETCO must demonstrate that the NAAQS still will not be violated with the refinery in operation.

4.4.3.4.3 Increment and Ambient Air Quality Standard Compliance

ALPETCO will comply with the increment and ambient standards using the control techniques described in the BACT analysis, section 4.4.3.3. Alternate controls which would have an effect on air quality are also discussed in the section.

The detailed analysis of increment consumption and ambient air quality is given in section 6.4.1.

4.4.3.5 STATE AND LOCAL REGULATIONS

ALPETCO will comply with all state and local air pollution control regulations. A detailed analysis of these regulations and the controls ALPETCO will use to comply with them can be found in the state construction permit application.

TABLE 4.4.3.4.2.1

NATIONAL AMBIENT AIR QUALITY STANDARDS
($\mu g/m^3$)

Pollutant	Primary Standard		Secondary Standard	
	Annual Mean	Maximum Concentration (Allowed Once Yearly)	Annual Mean	Maximum Concentration (Allowed Once Yearly)
Sulfur Oxides (SO_x) (measured as SO_2)	80	365 (over 24 hours)		1300 (over 3 hours)
Particulates	75	260 (over 24 hours)	60	150 (over 24 hours)
Carbon Monoxide (CO)	-	10 milligrams/m^3 (over 8 hours) 40 milligrams/m^3 (over 1 hour)	Same as Primary Standard	
Photochemical Oxidants	-	234 (over 1 hour)	Same as Primary Standard	
Hydrocarbons (HC)	-	160 (over 3 hours- 6-9 a.m.)	Same as Primary Standard	
Nitrogen Dioxide (NO_2)	100	-	Same as Primary Standard	
Lead	-	1.5 (over quarter)	Same as Primary Standard	

THE PACE COMPANY CONSULTANTS & ENGINEERS, INC. 5251 WESTHEIMER
P.O. BOX 53473 HOUSTON, TEXAS 77052 AC 713 965-0311 CABLE: PACECO-HOUSTON TELEX 77-4350

ALTERNATE WASTEWATER TREATMENT SYSTEMS

ALTERNATE WASTEWATER TREATMENT SYSTEMS

GENERAL CONSIDERATIONS

Several alternatives were considered in developing a wastewater treatment system for the Alpetco refinery. The criteria used in evaluating the considered alternatives were the following:

- All applicable federal, state, and local water quality standards must be met or exceeded.
- The system selected must be economically feasible.
- The wastewater treatment system selected must be operationally and mechanically reliable with a proven track record in other similar plants.

By adhering to the criteria listed above, Alpetco has selected a wastewater control system which will provide a high quality, low-volume effluent stream. Refinery wastewater will receive efficient treatment which is based on proven technology. Segregated sewer systems will be employed to maximize water reuse and recovery, consistent with the goals of the Clean Water Act Amendments. The various sewer systems can be classified as contaminated, uncontaminated, sanitary, and storm water impoundment.

The secondary wastewater treatment system which was selected for the Alpetco refinery is based on biological treatment. Biological treatment has been proven cost effective in removing soluble organics from refinery wastewaters, is highly dependable, and produces an excellent quality effluent. In general, the goal of the biological process is to remove organic material either by oxidation to carbon dioxide, water, and other derivitives, or by converting the organic material into a settleable form that can be removed by sedimentation. A typical wastewater treatment system based on biological treatment for a cracking refinery, such as the Alpetco refinery, is shown in Figure 4.4.5- .

The discussion concerning wastewater treatment alternatives which is given below applies to the ballast water treatment system as well as contaminated process water treatment. The one exception is that a gravity separator is not included with the ballast water treatment system since removal of large quantities of oil is not a necessity for ballast water which the Alpetco refinery will be receiving.

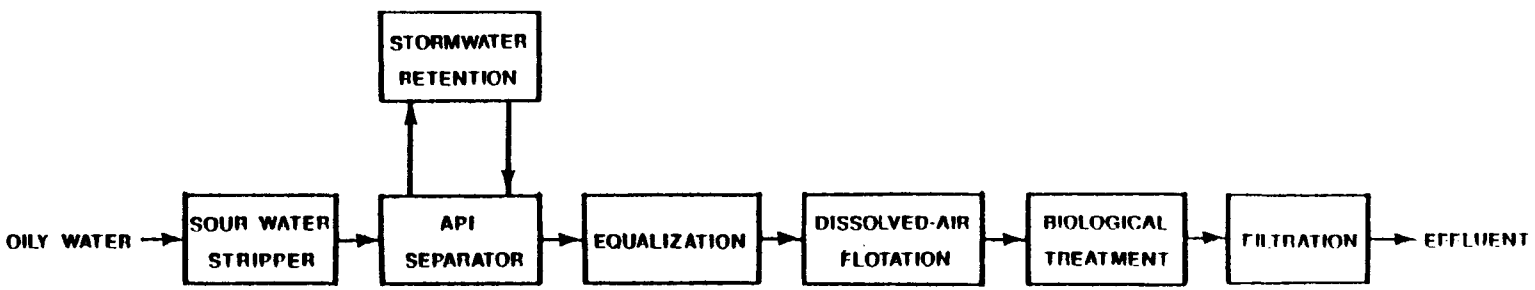

FIGURE 4.4.5

TYPICAL WASTEWATER TREATMENT SYSTEM FOR A CRACKING REFINERY

TREATMENT ALTERNATIVES CONSIDERED

Activated Sludge

This discussion includes conventional activated sludge processes as well as enriched air (oxygen) systems which are currently offered by several manufacturers. Activated sludge processes are used extensively for coagulating and removing non-settleable colloidal solids, as well as to stabilize organic matter. A high quality effluent is obtainable from a properly designed and operated activated sludge system. The process is an aerobic biological procedure where a high concentration of microorganisms is maintained within a reaction tank by recycling thickened bio-mass (sludge). Oxygen is supplied to the wastewater in the reaction tank either by mechanical aerators or a diffused-air system. Since the microorganisms remove the organic materials by biochemical synthesis of new cell mass and oxidation reactions, the converted organic matter must be removed by sedimentation. The sludge removed from the sedimentation tank is recycled to maintain the required concentration of microorganisms.

Nutrients - primarily nitrogen and phosphorus -- are required to maintain a healthy growth of microorganisms within the system. Generally, refinery wastewater contains enough ammonia to supply adequate nitrogen, but it may be deficient in phosphorus. Some of the sources of these elements are:

- Water condensate from the fluid catalytic cracking unit normally containing ammonia and other nitrogen compounds.
- Spent phosphoric acid catalyst from catalytic polymerization units. The phosphates can be leached from the catalyst with water.
- Boiler or cooling tower blowdown containing phosphates.

An inadequate supply of nutrients results in poor stabilization of the wastes and will stimulate fungi growth. This results in poor sludge settling characteristics and longer periods of aeration.

The following removal efficiencies are typical of activated sludge processes:

Parameter	Removal Efficiencies
BOD	80 to 99 Percent
COD	50 to 95 Percent
TSS	60 to 85 Percent
Oil	80 to 99 Percent
Phenol	95 to 99+ Percent
NH_3	33 to 99 Percent
Sulfides	97 to 100 Percent

Some of the major advantages of the activated sludge system are:

- Low land requirements
- The excellent response of the activated sludge systems to changing organic loads obtained by varying solids recycle.
- The ready availability of data on treatability of similar refinery effluents by the activated sludge process.

Disadvantages of the activated sludge process include:

- Temperature sensitivity since the optimum temperature for the activated sludge process is 20 to 30°C (68-86°F). In the Valdez climate, this would present a problem.
- Energy consumption for this process is relatively high since oxygen must be supplied either by mechanical aerators or a diffused air system.

Activated Carbon

There has been a tremendous development in recent years in the use of activated carbon for the removal of dissolved organic material from wastewater. However, since experience with this system as secondary treatment on a commercial scale has not been proven successful, it is normally used for final polishing of the effluent from a biological treatment process. It is feasible only if a very high quality effluent is needed.

Activated carbon removes organic contaminants from water by the process of adsorption (the attraction and accumulation of one substance on the surface of another.) In general, high surface area and pore structure are the prime considerations in adsorption of organics from water; whereas, the chemical nature of a carbon surface is of relatively minor significance. Granular activated carbons typically have surface areas of 500 to 1400 square meters per gram. Activated carbon has a preference for organic compounds and, because of the selectivity, is particularly effective in removing organic compounds from aqueous solutions.

A carbon adsorption unit consists of the adsorbers in which the wastewater stream contacts the activated carbon bed; a transport system for moving the carbon from the adsorbers to the regenerator and back; and a regeneration system usually consisting of a rotary kiln furnace. The adsorbers may be arranged in parallel, or a moving carbon bed in which carbon is periodically removed from the bottom of the bed and fresh carbon is added at the top. Of the various methods of carbon regeneration that have been used, thermal regeneration is the most widely applicable because multiple-hearth furnaces, rotary kilns, or fluidized bed furnaces may be utilized.

As noted previously, experience with activated carbon as secondary wastewater treatment has not proven successful. In one well documented instance, a 2.2 MGD filtration-carbon adsorption wastewater treatment plant was placed in operation at the Marcus Hook refinery of BP Oil, Inc. in March 1973, after extensive pilot plant testing. After more than two years in operation, it was determined that this wastewater treatment system did not produce an effluent equal to design expectations. The major problems experienced with this activated carbon system were:

- A substantial reduction in the adsorptive capacity of the regenerated carbon was observed after several months.
- Design flow rate could not be maintained because of plugging of the effluent septums (screens) by carbon fines.
- The production of sulfides across the carbon columns was observed and was shown to be the result of bacterial action as well as influent characteristics.
- Various significant mechanical problems involving the carbon transport system, automatic valves, and the regeneration furnace were experienced.

Although granular activated carbon is unproven as sole secondary treatment for refinery wastewaters, it has shown some promise as a polishing step following biological treatment. Of particular interest is the possibility of using powdered activated carbon for wastewater polishing, since this system would result in substantially reduced costs and would eliminate the need for carbon transfer and regeneration equipment.

Rotating Biological Contactors (RBC)

The RBC process is a fixed-film biological treatment system which has been selected for secondary treatment of the Alpetco refinery wastewater. The RBC system consists of a number of large diameter, high density polyethylene discs, which are mounted on a horizontal shaft and placed in a basin with a sloped floor. The discs rotate with approximately 40 percent of their surface area submerged in the wastewater. Organisms naturally present in the wastewater adhere to the rotating surfaces and cover the entire surface of the discs with a bio-mass growth. During rotation, the discs carry a thin film of wastewater into the air, where the water trickles down the surface of the discs and absorbs oxygen. Organisms in the bio-mass then assimulate both dissolved oxygen and organic materials from this film of wastewater. As the discs continue to rotate through the wastewater in the basin, further assimulation of dissolved oxygen and organic materials is performed by the bio-mass. Operating in this manner, the discs perform the following functions:

- Provide support media for the development and propagation of a fixed biological growth.

- Provide intimate contact of the growth with the wastewater.
- Provide an oxygen enriched wastewater film for high metabolism rates.
- Provide an excess amount of aeration in the treated wastewater.

Shearing forces exerted on the bio-mass as it passes through the wastewater cause excess bio-mass to slough from the discs into the water. This maintains a fixed and relatively constant microbial population on the discs' surface. The mixing action caused by the rotating discs keeps the sloughed solids in suspension until the treated wastewater carries them out of the RBC unit for separation and disposal.

The major advantages of the RBC system are:

- Low land requirements.
- Minimal energy requirements.
- Simplicity of operation, since it is a "once-through" system with no recycle necessary and requires minimal operator attention.
- Quick recovery from major upsets is achieved, even in the case of a complete bug population kill. Often only the organisms on the discs of the first few shafts in series are affected by an upset, leaving the bio-mass intact and functional on the last discs in series.
- Should powdered activated carbon be proven as a reliable means for polishing wastewater or for control of toxics or aromatic hydrocarbons, the RBC system is readily adaptable to the addition of powdered activated carbon at the bio-disc effluent trough.

Disadvantages of the RBC system are:

- The initial capital cost is relatively high.
- Initial installations of these type systems experienced many mechanical failures. The shafts, discs, and support members have been redesigned however, and now appear to be mechanically sound.

TREATMENT ALTERNATIVES NOT CONSIDERED

Stabilization (Oxidation) Ponds

A stabilization pond is simply a large shallow pond in which bacteria stabilize the wastewater fed to the pond. The ponds are normally 4 feet deep, since shallow ponds tend to have excessive weed growth and deep ponds do not get adequate oxygen transfer to maintain aerobic conditions which are essential to refinery wastewater treatment.

Stabilization ponds were not considered for the Alpetco refinery for the following reasons:

- Large land requirements are essential.
- The soils on the proposed refinery site are extremely porous and thus, would quickly diffuse any wastewater which might leak through a crack in the pond liner into the ground water.
- Stabilization in an oxidation pond is influenced by climatic conditions. During cold weather under ice cover, biological activity is extremely slow. The process, for all practical purposes, is reduced to sedimentation, and BOD reductions are generally about 50 percent.

Trickling Filter

A trickling filter is an aerobic biological device that is used extensively in the refining industry. Although it may be used as secondary treatment by itself, whenever a high quality effluent is required a trickling filter is not used. This system consists of a filter bed with a wastewater distributor and a sedimentation tank. The filter is usually a bed of broken rock, coarse aggregate, or plastic sheets. Only at extremely low loadings can a high quality effluent be obtained and it is at such loadings that the cost of the trickling filter is higher than other comparative processes. Consequently, this filter is feasible only as a "roughing" device rather than a complete treating system.

Deep Well Injection

It is generally agreed that deep well injection should be practiced only for those wastes which are not amenable to conventional surface treatment. Since the Alpetco refinery wastewater can be treated quite efficiently by conventional processes, deep well injection has not been considered as a treatment alternative.

Sulfide/Ammonia Stripping

Significant amounts of H_2S and ammonia are found in refinery wastewaters due to the breakdown of organic sulfur and nitrogen compounds during the various refining processes. These compounds can be removed by air or steam stripping. A discussion of this stripping operation may be found in Section 4.4.1, Alternate Process Design Considerations.

Oil Removal

The traditional method of oil separation in refinery wastewater has been the API gravity separator, which is sized to allow most of the free oil to float to the surface and the heavier solids to fall to the bottom. These separators are normally an integral part of the operation due to the amount of recoverable oil in refinery wastewaters. Wastewaters that contain a high volume of free oil are normally treated in the gravity separator before being mixed with other non-oily streams. This allows a separator to be sized for a smaller throughput volume.

Another type of gravity separator finding increased use in the refining industry is the tilted plate separator. The corrugated plate interceptor (CPI) is one of the most common tilted plate separators. This unit is made up of one or more modules consisting of corrugated plates tilted at a 45° angle. As the water flows between the plates, oil droplets collect on the underside and move to the top of the module. Improved efficiencies at less cost and space than those needed by the API separators have been reported.

The API separator has been selected as the Alpetco refinery gravity separator. This decision was mainly based on the API separator's ability to handle an accidental massive oil release into the wastewater system. The API separator can retain larger quantities of oil than a CPI separator without permitting oil breakthrough to the secondary treatment system.

Intermediate Oil and Suspended Solids Removal

Dissolved-air floatation (DAF) is normally considered an intermediate treatment process for further removal of oil and suspended solids from API separator effluents, prior to biological treatment. In the dissolved air floatation process the waste stream is saturated with air under a pressure of several atmospheres. The stream is then held in a retention tank for a period of minutes so that the air will dissolve. As the stream exits from the retention tank it flows through a pressure reducing valve -- dropping the pressure to atmospheric -- and then into a floatation tank. When the pressure is released, the air comes out of solution forming minute bubbles within the liquid. These bubbles, which are about 30 to 120 microns in diameter, adhere to the suspended particles and an aggregate is thus formed which rapidly rises to the surface and is skimmed from

the floatation tank. Although the use of DAF as an intermediate treatment step is not necessary for secondary treatment, its use generally does produce a higher quality effluent from the downstream secondary biological treatment system.

Final Filtration

A sand filter was selected for final filtration of the Alpetco refinery wastewater effluent to obtain a very high quality effluent. Organic matter in suspended or colloidal form will be filtered to reduce solids in the effluent to extremely low levels. Multimedia filters or microscreens can also be used in this service but were not selected for the Alpetco refinery. The multimedia filter, which may be composed of anthracite and sand, activated carbon and sand, or resin beds and sand, will not produce a higher quality effluent than the sand filter in this application and will result in higher capital costs. Microscreens will not produce as high a quality effluent as either sand filters or multimedia filters since available screen mesh size is too large.

THE PACE COMPANY CONSULTANTS & ENGINEERS, INC. 5251 WESTHEIMER
P.O. BOX 53473 HOUSTON, TEXAS 77052 AC 713 965-0311 CABLE: PACECO-HOUSTON TELEX 77-4350

COOLING SYSTEMS

COOLING SYSTEMS

INTRODUCTION

Most of the refining and petrochemical processes require heating of the feed and intermediate streams with either steam exchangers or fired heaters to initiate chemical reactions or effect separations by distillation. To conserve energy the processes are designed to recover, to the greatest extent possible, the heat from the product streams before routing them to tank storage. This heat is recovered by exchange with feed streams or by raising steam. Unfortunately it is not economically feasible (or technically possible) to recover all of this heat for useful purposes and thus it is necessary to reject the residuum heat by means of cooling water exchangers or air coolers.

DISCUSSION

With a few exceptions (discussed later) the Applicant has selected air cooling to avoid the problems that would be inherent with either evaporative cooling (wet cooling towers) or once-through seawater cooling with resulting thermal plume. Evaporative cooling could cause fogging with reduced visibility and freezing problems during cold weather and wastewater pollution problems (chromates) at all times. Once-through seawater cooling could cause thermal discharge problems in the receiving body of water such as upsetting the environment for marine life. The areas where air cooling will not be used are as follows:

Alkylation Reactors - These reactors have been developed over a number of years based on water cooling. An alternative to water cooling would require a pioneer development effort.

Alkylation Coolers - Where cooling of an acid bearing stream is required, water cooling must be used to guard against the possibility of spraying acid about the unit in the event of a tube failure. Air cooling would introduce that danger.

Pump and Compressor Cooling - It is necessary to use a liquid coolant for cooling of the internals of these rotating machines.

Flexicoker Gasifier Condenser - Water cooling is used in this service to minimize the required surface area. The stream being cooled is extremely corrosive and therefore an expensive alloy must be used for fabrication of the exchanger. As a result, there is a strong economic incentive to use water cooling to minimize the required exchanger surface area.

In all of the above cases, the Applicant proposes to use a circulating glycol-water stream for cooling. The glycol-water solution will be pumped to the process for cooling and the heat picked up by the glycol-water will be transferred to air in air coolers. The glycol-water will then be recirculated to the various processes. It is necessary to use a glycol-water system for cooling instead of a simple water system because of the extremely low ambient temperatures at the plant site.

THE PACE COMPANY CONSULTANTS & ENGINEERS, INC. 5251 WESTHEIMER
P.O. BOX 53473 HOUSTON, TEXAS 77052 AC 713 965-0311 CABLE: PACECO-HOUSTON TELEX 77-4350

ALPETCO GLOSSARY OF TERMS

ALPETCO GLOSSARY OF TERMS

Acid Gas - Any stream made up of chiefly carbon dioxide and/or hydrogen sulfide.

Aliphatic - Paraffinic compounds.

Alkylation - A reaction in which isobutane is combined with propylene and butylenes to form a high octane branched paraffin for motor fuel.

Amine - An alkanol amine such as monoethanol amine used to remove acid gas (H_2S and CO_2) from gaseous or liquid hydrocarbon streams.

Anode Grade Coke - Coke that is of high enough quality as measured by low concentration of sulfur and metals to be used as anodes in the aluminum industry.

Aromatics - Compounds which contain six membered rings with each carbon atom of the ring bound by two single bonds and one double bond.

Atmospheric Gas Oil - A portion of the crude oil boiling in the range of 650°F to 850°F.

Benzene - C_6H_6, a six carbon membered ring compound with one hydrogen on each carbon. Benzene is the basic building block of all aromatic compounds.

CaF_2 - Calcium fluoride

Calcining - A process where the volatile content of coke is reduced by the application of heat.

"Cat Gasoline" - The C_5-430°F boiling material produced from a fluid catalytic cracker.

Caustic Wash - A procedure where a hydrocarbon stream is contacted with caustic for removal of mercaptans.

CBM Pit - Sump where any acidity is neutralized.

Conradson Carbon - An analytical testing procedure which measures the relative tendency of a petroleum stream to form coke.

Deisohexanizer - A distillation column which distills isohexane and lighter components overhead.

Deisopentanizer - A distillation column which distills isopentane overhead.

Endothermic - A reaction in which a heat input is required to maintain a constant temperature, i.e., heat is required by the reaction.

Exothermic - A reaction in which heat is liberated during the reaction.

FCC - Fluid catalytic cracking or fluid catalytic cracker.

Flash Point - Temperature at which a source of ignition can cause a hydrocabon to ignite.

Flash Zone - The feed entrance area of a crude vacuum or distillation unit where the initial separation of distillates from residue occurs.

Gas Oil - That portion of the crude oil boiling between 650°F and 1000°F.

Heat Exchange - The heating or cooling of a stream by another stream using a heat transfer surface.

Heavier/Lighter - Relative terms which refer to boiling ranges.

Heaviest Crude Cut - In this context, vacuum resid. The specific gravity of crude fractions increases with increasing boiling point. For this reason, vacuum resid, which is the highest boiling fraction, has the highest specific gravity, giving rise to the term "heaviest cut".

Hydrogenation - The addition of hydrogen onto unsaturated molecules. Production of paraffins from olefins or naphthenes from aromatics are examples.

Isohexane - A paraffinic compound with six carbon atoms arranged in a branched fashion.

Isopentane - A paraffinic compound with five carbon atoms arranged in a branched fashion.

KOH Mix Tank - Vessel where KOH (potassium hydroxide) is dissolved in water.

LCO Saturation - Conversion of polycyclic aromatics in light cycle oil to monocyclic aromatics.

Light Ends - Mixture of light gases e.g., methane, ethane, propane.

Light Olefins - In this context, propylene and butylene.

LPG -Liquid Petroleum Gas, a mixture of C_3 and C_4 hydrocarbons that is under sufficient pressure to keep the components in the liquid phase at ambient temperatures.

Mercaptans - Sulfur compounds of the type R-S-H where R represents an alkyl group.

Merox Sweetening - A process utilizing caustic where mercaptans are converted to disulfides.

Naphtha - A hydrocarbon stream boiling in the range of 130°F to 400°F.

Naphthenes - Hydrogen saturated ring compounds. Cyclohexane is the basic naphthene.

Naphthene Dehydrogenation - The conversion of naphthenes to aromatics which results in the production of hydrogen.

Net Hydrogen Make - The hydrogen produced from a reformer.

Olefins - Organic compounds with at least one double bond.

Overhead - That portion of the feed to a distillation column which is produced as a top product.

Paraffin Cyclization - The formation of a carbon ring structure from a straight chain paraffin.

Paraffinic Naphtha -A naphtha which contains only small concentrations of naphthenes and aromatics.

Paraffins - Organic compounds with no double bonds.

Polycyclic Aromatic Saturation - Conversion of aromatic rings to naphthenes by hydrogenation.

Polymer - A high boiling, high molecular weight, organic compound.

Polymerization - The reaction of gaseous propylene or butylenes to produce a high octane gasoline product.

ppmv - Parts per million by volume.

Raffinate - The paraffinic stream produced from an aromatics extraction unit.

Reduced Crude - Atmospheric distillation column bottoms product.

Reflux - A portion of a product returned to a distillation column to improve separation.

Research Octane Number, Clear - A number indicating the relative performance of a fuel in an internal combustion engine. Clear refers to an absence of lead.

RSH - A mercaptan; in organic chemistry, "R" is a general symbol used to mean any saturated paraffin group (Alkyl). Therefore RSH could be C_3SH, C_4SH or any other similar grouping.

RSSR - A disulfide.

Saturates Butane - Mixture of isobutane and normal butane.

Saturates Gas - Gas streams containing only paraffinic hydrocarbons such as gas produced by crude units and catalytic reformers.

SCF - Standard cubic feet.

Side Stream Fractions - Streams produced from the side of a distillation column.

Sour Water - Process water that is contaminated with ammonia or hydrogen sulfide.

Stoichiometric - The balance of reactants such that there is no excess of any reactant required to form a particular product.

Straight Run —Products produced directly from the crude unit with no other processing.

Surge Drums - Vessels used to provide liquid capacity during minor fluctuations in processing conditions.

Toluene - $C_6H_5CH_3$, a benzene ring with a single methyl group (CH_3) replacing one hydrogen.

Unsaturates or Unsaturated Gas - Gas streams containing olefins and diolefins in combinaton with paraffinic hydrocarbons. Unsaturated gas is produced by cokers and Fluid Catalytic Cracking units.

UOP Continuous Reforming - A reforming process utilizing a circulating catalyst system to provide continuous catalyst regeneration.

Vacuum Gas Oil - A portion of the crude oil boiling in the range of 650°F to 1050°F.

Vacuum Resid - The bottom product of the vacuum tower, all of which typically boils over 1000°F.

Virgin Fuel Oil - Fuel oil as produced by the crude unit with no further processing. Synonymous with "straight run".

Xylenes - $C_6H_4(CH_3)_2$, Any of three isomers containing a benzene ring with CH_3 replacing hydrogen in two positions. The relative positions of the methyl group to each other around the ring dictate whether the xylene is ortho, meta, or paraxylene.

REFERENCES

American Petroleum Institute, 1977. "Water Reuse Studies," API Publication No. 949.

American Petroleum Institute, American Gas Association, Canadian Petroleum Association, 1978. Reserves of Crude Oil, Natural Gas Liquids, and Natural Gas in the United States and Canada as of December 31, 1977, (32).

Barnes, F.F., 1967. "Coal Resources of Alaska," U.S.G.S. Bulletin 1242-B.

Bell, C.P., et al., 1978. The Pace Energy and Petrochemical Outlook to 2000. The Pace Company.

Beychok, M.R., 1967. Aqueous Wastes for Petrochemical Plants. John Wiley and Sons.

Bland, W.F., 1979. "Alaska is Developing Plan to Use North Slope Gas Liquids as Petrochemical Feedstocks," Petrochemical News, May 14.

Bland, W.F., and R.L. Davidson, 1967. Petroleum Processing Handbook. McGraw-Hill.

Boland, R.F., J.L. Delaney, D.E. Earley and T.E. Cturtnieek, 1976. Screeing Study for Miscellaneous Sources of Hydrocarbon Emissions in Petroleum Refineries. Monsanto Research Corp.

Bonamassa, F. and Yee, S.Y., 1957. Emission of Hydrocarbons to the Atmosphere from Cooling Towers. Air Pollution Control District County of Los Angeles Western Oil and Gas Association.

Bottge, R., 1975. "Changing Economics of Alaskan Coals," Proceedings of the Conference, Focus on Alaska's Coal 1975, University of Alaska, Fairbanks, October 15-17, 1975. School of Mineral Industry, University of Alaska, Fairbanks and Federal Energy Administration, Anchorage.

Bush, K.E., April 12, 1976. "Refinery Wastewater Treatment and Reuse," Chemical Engineering Magazine.

Cameron Engineers (Subsidiary of The Pace Company Consultants and Engineers, Inc.), 1978. Multimedia Environmental Control Engineering Handbook. Cameron Engineers.

Chandra, U., 1971. Seismological Society of America Bulletin,, (61). "Combination of P and S Data for the Determination of Earthquake Focal Mechanism".

Chapman, K., 1979. NO_x Reduction on Process Heaters with a Low NO_x Burner. Air Pollution Control Association.

Cheremisinoff, P. N., September, 1976. "Biological Wastewater Treatment," Pollution Engineering Magazine.

Continental Oil Company, 1978. The Pipeline Gas Demonstration Plant Economic Analysis. DOE, Division of Coal Conversion.

Cornwell, C.N., 1977. Alaska. McGraw Hill.

Cornwell, C.N., 1977. "Land Reclamation Is An Integral Part of The Only Operating Coal Mine in Alaska," The Coal Miner, September.

Danielson, J.A. 1973. Air Pollution Engineering Manual, AP4, 1973. U.S. EPA Office of Air and Water Programs, Office of Air Quality Planning and Standards.

E.P.A. Technology Transfer, "Capsule Reports," EPA-625/2-74-004, EPA-625/2/75-008, EPA-625/2/76-010, EPA-625/2-78-018, EPA-625/2-78-016. Environmental Protection Agency.

Engineering Science, 1978. "An Analysis of Alternative Policies for Dealing with New Source Growth in Non-attachment Areas." August.

Environmental Protection Agency, 1974. Survey Reports on Atmospheric Emissions From the Petrochemical Industry, (II). U.S. EPA Office of Air and Water Programs, Office of Air Quality Planning and Standards.

Environmental Protection Agency, 1978. Compilation of Air Pollutant Factors, AP42. U.S. EPA Office of Air and Waste Management, Office of Air Quality Planning and Standards.

Environmental Protection Agency, 1978. 1977 Clean Air Act: Prevention of Significant Air Quality Deterioration, State Implementation Plans and Requirements. Federal Register, (43) 118.

Environmental Protection Agency. Compilation of BACT/LAER Determinations, Publication Pending. EPA, Pedco Environmental Inc., Office of Air Quality Planning and Standards.

Environmental Protection Agency. 1974. Development Document for Effluent Limitations Guidelines and New

Source Performance Standards for the Petroleum Refining Point Source Category, EPA-440/1-74-014a, April.

Environmental Reporter Federal Laws. Clean Air Act Amendment of 1977, PL 95-95, August 7, 1977.

Environmental Reporter, 1977. "Environmental Protection Agency Proposed Changes to Regulations for Prevention of Significant Air Quality Deterioration." November 3.

Exxon Research and Engineering Company, 1975. Fluid Catalytic Cracking Unit Flue Gas Scrubbing.

Exxon Research and Engineering Company, 1978. Exxon Flexicoking SM. Florham Park, New Jersey.

Federal Register, 1976. Title 40 - Protection of Environment, Chapter 1 - Environmental Protection Agency, Subchapter C - Air Programs, Part 52, December 21, 1976. (41) 246.

Federal Register, 1976. Title 40, Chapter 1, Subchapter C, Part 51 - Requirements for Preparation, Adoption, and Submittal of Implementation Plans, December 21, (41) 246.

Federal Register, 1977. Title 40 - Protection of Environment Chapter 1 - Environmental Protection Agency, Subchapter C - Air Programs, Part 52 - Approval and Promulgation of State Implementation Plans, 1977 Clean Air Act Amendments to Prevent Significant Deterioration, November 3, 1977. (42) 212.

Federal Register, 1979. Title 40, Chapter 1, Subchapter C, Part 51 - Requirements for Preparation, Adoption, and Submittal of Implementation Plans Emission Offset Interpretative Ruling, January 16, 1979. (44) 11.

Federal Register, 1979. Part III, Environmental Protection Agency - General Preamble for Proposed Rule Making on Approval of State Implementation Plan Revisions for Non-attainment Areas, April 4. (44) 66.

Gary, J.H. and G.E. Handwerk, 1975. Petroleum Refining: Technology and Economics. Marcel Dekker, Inc., New York.

Gloyna, E.F. and D.L. Ford, 1970. Petrochemical Effluents and Treatment Practices: The Characteristics and Pollutional Problems Associated with Petrochemical Wastes. Federal Water Pollution Control

Administration Research Series 12020-2/70. February.

Gloyna, E.F., et al., September 9, 1974. "Storm Runoff Handling for Industrial Installations" presented at the 7th International Conference on Water Pollution Research. Paris, France.

Gloyna, E.F.and D.L. Ford, October 10-11, 1974. "Control of Refinery and Petrochemical Wastewaters and Residuals" presented at the 1st International Symposium on the Techniques of Liquid-Liquid Separations. Lamar University, Beaumont, Texas.

Gulf Publishing Company, 1968. Waste Treatment and Flare Stack Design Handbook.

Illinois Coal Gasification Group, 1979. Pipeline Gas Annual Report. DOE, Division of Coal Conversion.

Ives, G., Jr., 1979. "Alaska Highway Project Gains Momentum from Energy Bill," Pipeline Industry.

Mason, H.B., A.B. Shimizu, J.E. Ferrell, G.G. Poe, L.R. Waterland and R.M. Evans, 1977. Preliminary Environmental Assessment of Combustion Modification Techniques: Volume I Summary, EPA-600/7-77-119a. EPA.

Mason, H.B., A.B. Shimizu, J.E. Ferrell, G.G. Poe, L.R. Waterland, and R.M. Evans, 1977. Preliminary Environmental Assessment of Combustion Modification Techniques, Volume II Technical Results, EPA 600/7/77-119b. EPA.

McCrodden, B.A., 1979. Treatment of Refinery Wastewater Using a Filtration-Activated Carbon System.

McGraw Hill, 1979. "California Agency Threatens to Sue Sohio Over Withdrawal from PACTEX PL Plan," Platt's Oilgram News. May 29.

Nelson, W.L., 1964. Petroleum Refinery Engineering. McGraw-Hill.

Oil and Gas Journal, The, 1978. "Senate Opposition Awaits Alaska Lands Act." May 29.

Oxidants Engineering Science, August, 1978. "An Analysis of Alternative Policies For Dealing With New Source Growth in Non-attainment Areas," (2).

Palmer, R.K., 1957. Hydrocarbon Losses from Valves and Flanges. Air Pollution Control District County of Los Angeles U.S. Department Gas Association.

Parkinson, G., 1979. "Plans Made to Keep Alaskan Oil Flowing," Chemical Engineering. April 23.

Patsch, B.J.G. 1975. "Exploration and Development of Beluga Coal Field," Proceedings of the Conference, Focus on Alaska's Coal 1975, University of Alaska, Fairbanks, October 15-17, 1975. School of Mineral Industry, University of Alaska, Fairbanks and Federal Energy Administration, Anchorage.

PEDCo. Environmental Inc., 1977. Technical Guidance for Control of Industrial Process Fugitive Particulate Emissions, EPA 450/3-77-010.

Robinson, J., 1979. NO_x Control by the Thermal $DENO_x$ Process in a Tertiary Oil Recovery Steam Generator. Air Pollution Control Association.

Salvesen, K.G., K.J. Wolfe, E. Chu and M.A. Herther, 1978. Emission Characterization of Stationary NO_x, Sources: Volume I Results. EPA 600/7-78-120a, 1978.

Salvesen, K.G., M. Herter, K. J. Wolfe and E. Chu, 1978. Emission Characterization of Stationary NO_x, Sources: Volume II, Data Supplement, EPA 600/7-78-120b.

Sanders, R.B., 1975. "Coal Resources of Alaska," Proceedings of the Conference, Focus on Alaska's Coal 1975, University of Alaska, Fairbanks, October 15-17, 1975. School of Mineral Industry, University of Alaska, Fairbanks and Federal Energy Administration, Anchorage.

Schalit, L.M. and K.J. Wolfe, 1978. SAM/1A:A Rapid Screening Method for Environmental Assessment of Fossil Energy Process Effluents, EPA 600/7-78-015.

Sernco, 1974. Applicants Environmental Assessment for a Proposed Gasification Project in Campbell and Converse Counties, Wyoming.

United States Bureau of Reclamation, 1977. El Paso Coal Gasification Project San Juan County, New Mexico.

United States Bureau of Reclamation, Upper Colorado region, 1976. Final Environmental Statement - Western Gasification Company, Coal Gasification Project and Expansion of Navajo Mine by Utah International.

Usibelli, J., 1975. "Mining Constraints and Operations at Usibelli Coal Mine," Proceedings of Conference, Focus on Alaska's Coal 1975, University of Alaska, Fairbanks, October 15-17, 1975. School of Mineral Industry, University of Alaska, Fairbanks and Federal Energy Administration, Anchorage.

Wallace, M.J., 1979. "Controlling Fugitive Emisions," Chemical Engineering. August.

Waterland, L.R., H.B. Mason, R.M. Evans, K.G. Salvesen and K.J. Wolfe, 1978. Environmental Assessment of Stationary Source NO_x Control Technologies: First Annual Report, EPA 600/7-78-046. EPA.

Wetheroid, R., Radian Corporation, and P. Lloyd, 1979. Emission Factors and Frequency of Leak Occurrence for Fittings in Refinery Process Units. The Pace Company.

Wilson, H.M., 1979. "ALASKA CANADA REPORT: Alaska Explorers Still Sure Big Finds Coming," The Oil and Gas Journal. February 26.

Archaeology

ARCHAEOLOGICAL AND HISTORIC FEATURES

ARCHAEOLOGY

RELATED TO

ALASKA PETROCHEMICAL COMPANY

DEVELOPMENT

NEAR

VALDEZ, ALASKA

FINAL REPORT

prepared by

ALASKARCTIC

Glenn Bacon
Archaeologist

for

Dickinson - Oswald - Walch - Lee
Engineers

September 1979

TABLE OF CONTENTS

Preface . . . . . page I-26

Introduction I-30

Summary of Regional History and Prehistory. I-31

Methodology I-36

The Survey. I-39

Vicinity Map Showing Survey Areas I-40

Schematic Map of the Plant Site Area. . . I-41

Map Showing Dendrochronology Stations . . I-42

Table 1: Age Estimates of Trees Sampled . I-45

Conclusions I-46

Report from the State Historic Preservation Office I-49

Effects of Construction and Operation of the Proposed Facility I-49

Contingency Mitigation Plans. I-49

Unavoidable Adverse Environmental Impacts of the Proposed Facility Development I-50

References Cited. I-51

Appendix (letter from the State Historic Preservation Office). I-55

PREFACE

On June 8, 1979, under contract to Dickinson-Oswald-Walch-Lee Engineers (DOWL), Alaskarctic initiated a program designed to locate any significant historic and/or prehistoric sites within an area proposed for development by the Alaska Petrochemical Company (ALPETCO) near Valdez, Alaska. The Alaskarctic research program, summarized in the following pages, was designed to meet guidelines expressed in Federal Regulations 36 CFR 800, Protection of Historic and Cultural Properties. That set of regulations comprises a procedural program which answers to concerns for cultural preservation expressed in the National Historic Preservation Act, Presidential Executive Order 11593 (Protection and Enhancement of the Cultural Environment), and the President's Memorandum on Environmental Quality and Water Resources Management (July 12, 1978). In addition, objectives of the Alaska Historic Preservation Act were recognized.

The Alaskarctic study was organized as a three phase program. Phase I was designed as a search of appropriate ethnographic and geological literature and maps. The geologic aspect of this search focused on an attempt to establish geologic parameters within which to conduct an on-the-ground archeological survey for prehistoric

sites (part of Phase II). In specific we were interested in which portions of the project site might have been uninhabitable due to the presence or effects, such as runoff, of the Valdez Glacier.

The ethnographic aspect of the search was a review of selected published and unpublished sources, some of which were provided through the courtesy of Dr. William Workman (University of Alaska, Anchorage), a noted authority on the aboriginal peoples of the Pacific Gulf Coast of Alaska. It was hoped that the ethnographic research would reveal locations of early historic aboriginal settlements or aboriginal resource areas in the vicinity of the project area.

Examples of resource areas would be such as hunting areas, berry picking areas, salmon fishing sites, quarry sites for material to manufacture stone tools, and wood cutting sites. No aboriginal use of the project site could be documented.

The Phase I literature search also reviewed the early military activities in the Valdez area. Most of these were in association with the Gold Rush just prior to the

turn of the century. The literature search revealed no documentation of any early historic use of the project area, except as noted below.

Evidence does indicate that by 1911 several mining claims were established on the Valdez Glacier outwash plain (Storm 1911). Some of these appear to be in the same area now proposed for ALPETCO development.

Following the ten day literature search, I initiated Phase II on June 18, 1979. As during the literature search, I was assisted by Ms. Roberta Goldman. We began our Phase II study with an orientation tour of the project site. The tour was guided by the DOWL hydrologist Toramen Sahin, who at that time had already been on the project site for several months. At other times during the Phase II effort we were assisted by DOWL's field geologist, Terry Barber.

Seismic lines and access roads had already been cut through the project site at the time of our field survey. In addition to being key navigational features, these lines and roads provided valuable clues as to the nature

of near surface soils over the project site. In addition, trees that had been felled during construction of the seismic lines and roads were available for dendrochronological study (tree ring dating).

Phase III of the Alaskarctic research program consisted of a review of data collected during the pre-field literature search and during the field survey. In addition, our attention was given to archival material donated by Mrs. Dorothy Clifton to the University of Alaska, Fairbanks. Much of the material documents the early history of Valdez. Phase II concluded with the preparation of this report.

INTRODUCTION

Valdez, originally known as Copper City (Schrader 1899: 349) is located on the Pacific Gulf Coast of Alaska and at the base of the Chugach Mountains (61°07'N, 146°16'W). In the days following the Gold Rush of 1898, and until recent times, Valdez has been a small town with a population under 600 persons (Orth 1967: 1016).

Since the beginning, Valdez Glacier has been a dominant factor in the lives of Valdez residents. Annual flooding and the possibility of a breakout of ice-dammed lakes or of a glacial advance have posed a threat to Valdez for over six decades (Field 1975: 362). For some time now the Valdez Glacier has been undergoing a rapid retreat (Tarr & Martin 1914: 238ff).

Today the Alaska Petrochemical Company is proposing the construction of a large petrochemical complex on the broad glacial floodplain the Valdez Glacier has left behind. This is a report on an archaeological study of the proposed site conducted in preparation of an Environmental Impact Statement.

SUMMARY OF REGIONAL HISTORY AND PREHISTORY

During the years following the discovery of the Cape Krusenstern beach ridges and the deeply stratified archaeological site at the Onion Portage (Giddings 1962), an increasingly clear picture has developed of the prehistory of the western portion of the North American arctic. To date the most fruitful studies have been conducted in the northwestern region of Alaska (see Anderson 1968; Giddings 1967; Larsen & Rainey 1948) where techno-environmental analysis is apparently demonstrating a correlation between the rate of climatic change and the rate of technological change.

Techno-environmental analysis is also being applied to the Pacific Coast of Alaska. No full discussion is as yet available, due in large part to a relative paucity of archaeological data for that region. Nearly all of the available evidence for prehistoric human occupation along the Gulf Pacific Coast of Alaska has come from the western portion of that region.

Archaeology of the western Pacific Gulf indicates human presence since early Holocene times (the period since the last major glaciation, roughly the last 10,000 years). William S. Laughlin has led research in the Aleutian

Islands and he concludes that material culture has undergone a relatively gradual change for the past 8,500 years (Aigner, et. al. 1976; Laughlin 1951, 1962, 1963, 1967, 1975; Laughlin & Aigner 1966; Laughlin & March 1954).

Recent archaeological research on the Alaska Peninsula suggests that this area too was occupied since early Holocene times (cf. Dumond 1968, 1969a, 1969b, 1971, 1976; Dumond, et. al. 1975; McCartney 1974; Okada & Okada 1974; Workman 1966).

A hand full of artifacts from the Ground Hog Bay site and the Hidden Falls site in Southeast Alaska suggests the early presence of man along that part of the Gulf Coast (Robert Ackerman, oral communication, 1979). Archaeological data dated to more recent times indicates a series of cultures representing a Pacific maritime adaptation, probably Eskimo, occupied the Pacific Gulf Coast for the last 5,000 years (Fitzhugh 1975; De Laguna 1956).

The archaeology of Prince William Sound is almost entirely the product of Frederica De Laguna (ibid.), who studied the area during the summers of 1930 and 1933.

Her work continues to dominate our understanding of the area which has seen little additional research in subsequent years. On the basis of her detailed investigations, De Laguna concluded that the most recent aboriginal inhabitants of central-north Prince William Sound (which includes the Port Valdez area) were linguistically and otherwise Pacific Eskimo within the Kachemak Tradition (De Laguna 1934).

Archaeological research from the interior of Alaska (Workman 1977) and from northwestern Prince William Sound (Birket-Smith & De Laguna 1938) indicates that the coastal Chugachmiut were bordered by Indians of the Athapaskan linguistic stock. They are now known as the Eyak, of the Copper River Delta and Northwestern Prince William Sound, and their cousins the Ahtna, who ranged to the north.

Human prehistory of the Pacific Gulf Coast, both east and west of Prince William Sound, appears to date back to the early Holocene. It is therefore not unreasonable to expect that sites dating to that early period may be found in the vicinity of Valdez. In more recent times Valdez represented a geographical interface between two great cultural traditions in Alaska, Eskimo and Athapaskan.

It is not unreasonable to anticipate elements of each of these traditions also to be present in the Port Valdez area. Yet, to date, we have no record of aboriginal encampment near the present community of Valdez. This may be due to a number of bio-geological factors.

Pertinent to aboriginal populations, the Port Valdez area does not appear to have been as resource rich as the nearby Copper River region. In addition much of the Valdez area has been, and remains, subject to flooding from glacial outwash during the summer months. That and the difficulty encountered in attempting to travel from the coast to the interior may have discouraged aboriginal man from settling in the Valdez vicinity in any great numbers.

The difficulty of travel from the coast to the interior over Valdez Glacier was the first major hurdle faced by the white men who surged into the area for the Gold Rush of 1898 (Hazelet 1964; The Pathfinder of Alaska, January 1924: 5-23). The U.S. Army quickly recognized the need for an alternate overland route to the interior (Abercrombie 1900); and work was begun on what was to become known later as the Richardson Trail, which led up over Thompson Pass.

Begun in 1899, the Richardson Trail was passable to wagon traffic by 1910 and by automobile by 1915. Yet the trail remained so difficult that as late as 1925 the automobile trip from Valdez to Fairbanks usually took two or three days (The Pathfinder of Alaska, February, 1925; Valdez Transportation Company, n.d.). Even today the mountain passes along the highway are often closed by winter snow storms.

Early attempts at constructing a railroad link from Valdez to the copper fields of the interior all ended in failure. The Pathfinder of Alaska (April 1925: 7) records, "Attempts were made by three companies to

> start railroads into the interior, however none succeeded. The first which was known as the 'Home Railroad,' organized by Reynolds endeavored to reach the Yukon but it became bankrupt shortly after beginning operations. The second by which the Guggenheim corporation intended to bring ore from the Copper properties near Kennecott, after much trouble decided to start from Cordova. In the summer of 1904, O. P. Hubbard, representing Helm, a California promotor, started surveying and grading the unsuccessful Valdez-Yukon Railroad."

So dramatic were the struggles of the railroad companies that famed northern author Rex Beach wrote The Iron Trail (1913), a gripping fictional account of the race to the interior. In writing the novel, Rex Beach perhaps

best captured the energy, the vision, the hope and the heartbreak that seems to have characterized the early days of Valdez.

Not until the tragic events surrounding the Good Friday earthquake of 1964 would Valdez see such an unleashing of human energy. Then followed a period of relocation and rapid change, perhaps culminating in the construction of the superport which services tankers moving products from the Alyeska pipeline.

METHODOLOGY

Project methodology was linked to the field plan as outlined under the Scope of Work. Three phases in the study were recognized: a pre-field literature search, a field survey and post-field analysis.

Prior to the field investigations we made a preliminary search of the literature in order to establish parameters within which to conduct the actual on-the-ground archaeological survey. Already being generally familiar with the ethnographic literature for the study area, we concentrated our initial literature search on the surficial geology of the study area. It was our intent to

discern geological phenomenon which would tend to limit or to concentrate human exploitative patterns in the area.

We also searched the literature in order to cull the locations of any aboriginal or historic structures which might lie within the study area. No mention of such structures could be found. Yet the pattern of historic use indicated that the area could contain the scattered leavings of the thousands of gold seekers who were known to have traveled through the Valdez vicinity.

Based on the results of the literature search and previous experience, we prepared for the on-site inspection of the study area. The field aspect of the study plan included on-the-ground archaeological survey, helicopter borne aerial reconnaissance, dendrochronology and informant interviews.

The on-the-ground survey consisted of foot traverses through portions of the project area. Abundant natural erosion features revealed the uppermost subsurface geological deposits and obviated the need for hand excavated test pits. Many of the erosion features, plus deposits

revealed through road and seismic line construction, were examined for evidence of past human use. In addition, lithic materials contained or revealed in the deposits were examined for their suitability as raw material for stone tool production.

A helicopter borne aerial reconnaissance of the project area was undertaken to augment the foot survey. Using flight patterns refined during the archaeological survey along the trans-Alaska pipeline route, we flew the project site at low altitude and at a slow ground speed.

Our limited dendrochronological study consisted of field counting the rings on eleven cottonwood trees which had been felled as part of seismic and access road construction.

Directed interviews were conducted with several Valdez residents. Other long time residents were queried by letter questionaire.

Post field research included examination of archival documents to which we were directed by Mrs. Dorothy Clifton (Valdez resident). It was thought that these documents of early Valdez history might reveal historic period utilization of the project area.

THE SURVEY

The on-the-ground archaeological survey concentrated on the proposed plant site, an area encompassing approximately 200 acres. In all, seven looping traverses were made through the proposed plant site. Because the eastern half of the plant site is cut by several braids of an active and large stream, on-the-ground survey concentrated on the western portion of the proposed plant site.

Additional on-the-ground survey was conducted from the corridors created by the seismic lines and roads. Along the proposed pipeline corridor between the proposed plant site and Solomon Gulch observations were made from the parallel portions of the Dayville Road and the Alyeska pipeline corridor. Visual penetration from these clear areas into the proposed project areas varied from an estimated twenty to seventy-five meters (60 to 225 feet) depending upon micro-vegetation patterns.

Along the proposed pipeline corridor between the southern boundary of the project site and the Richardson Highway, only the areas contiguous to stream crossings

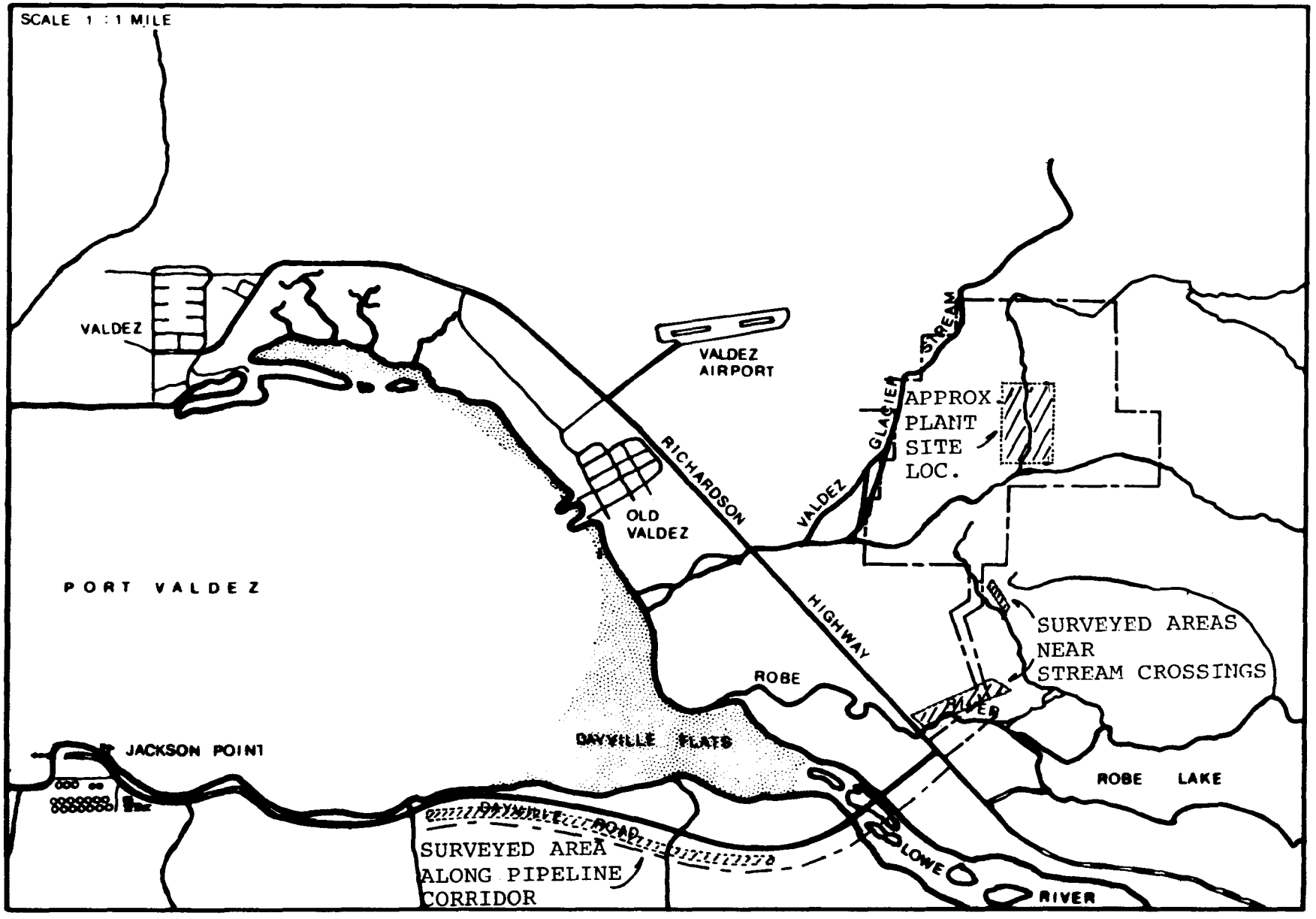

VICINITY MAP: Surveyed Areas

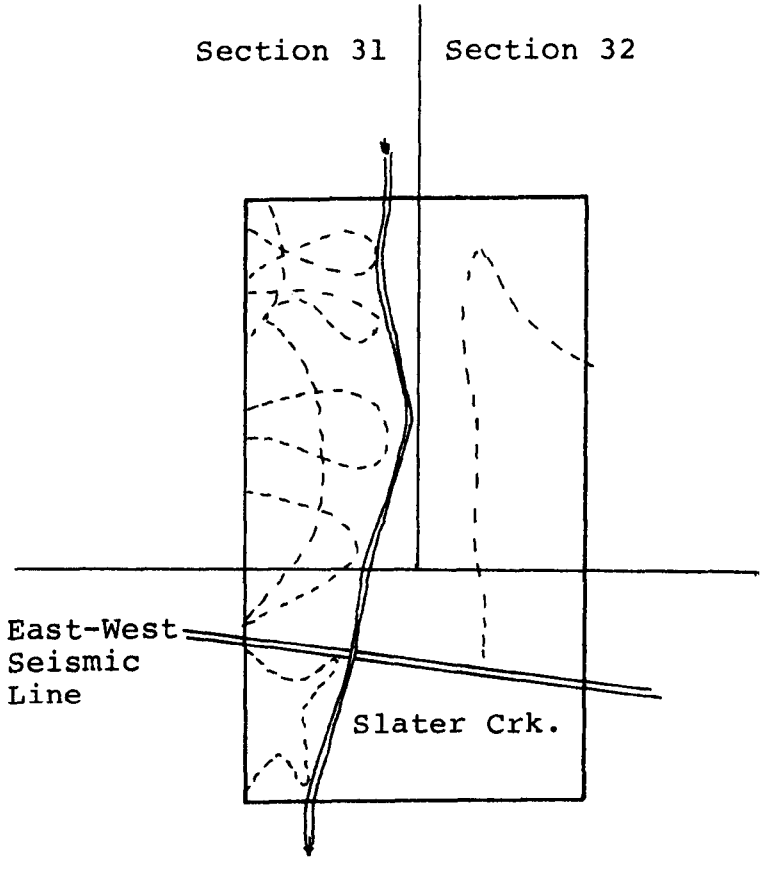

DASHED LINES REPRESENT
SURVEY ROUTES

SCHEMATIC MAP OF PLANT SITE AREA

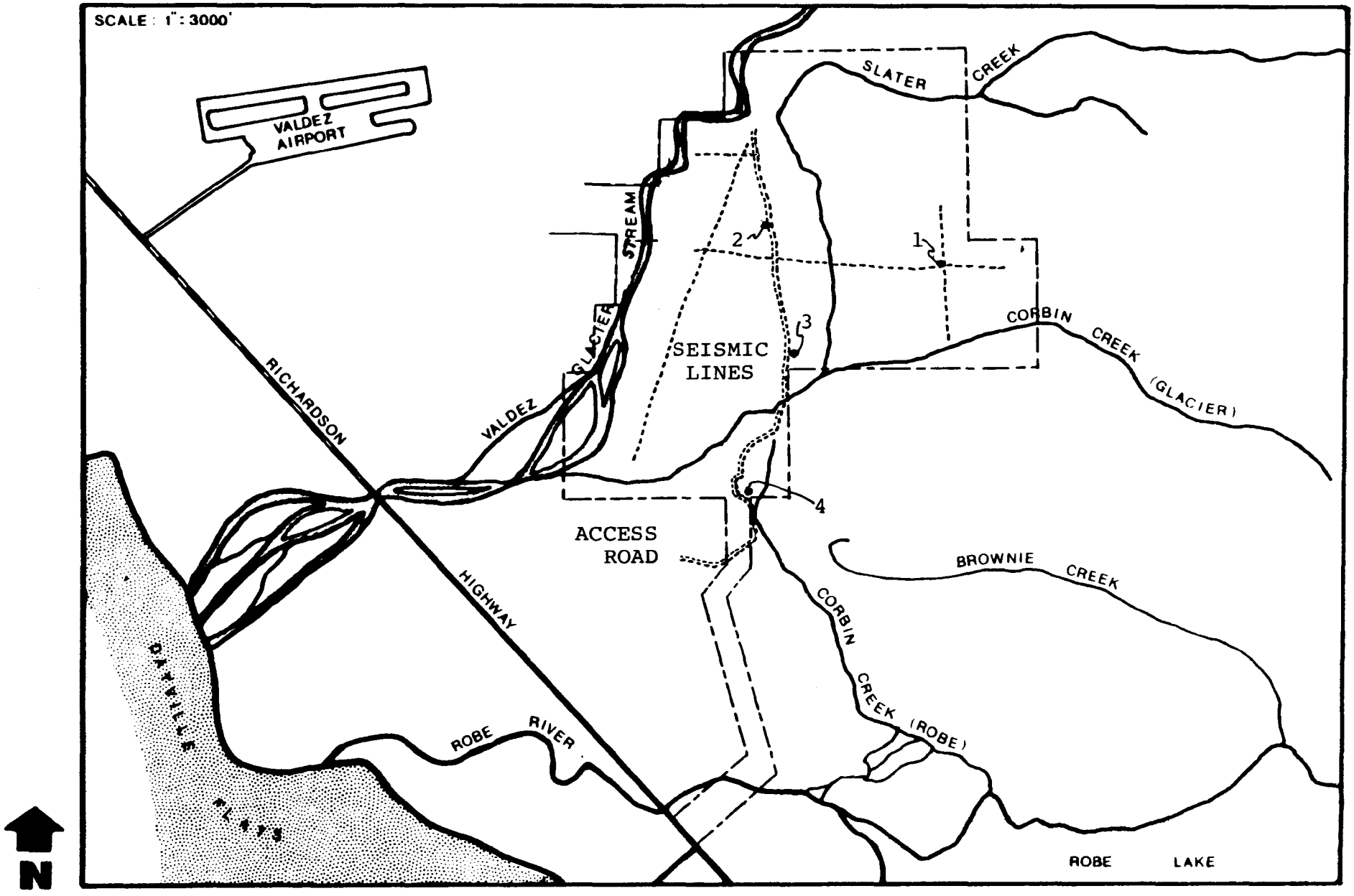

DENDROCHRONOLOGY SAMPLING STATIONS

were examined closely on the ground. The remainder of the pipeline corrridor along the east end of the Valdez bay is highlighted by low lying marsh-floodplain and steep hillsides. Neither area is likely to produce a significant historic or prehistoric site.

Because the on-the-ground survey did not provide 100% surface coverage of the project site and access corridors, and because traditional survey techniques proved largely ineffective in the thick jungle-like vegetation cover, a field change was made in the survey plan. I decided to utilize a technique which had proved very useful when applied during the archaeological survey of the Alyeska pipeline corridor during the early 1970's.

The technique is based on an aerial survey, and it involves the use of a small, agile helicopter. An available Bell 206 was secured from the locally based ERA Helicopters. The pilot, Mr. John McCamish, was instructed to fly at treetop altitude and at approximately twenty miles per hour. Proceeding in this manner, he flew us back and forth in parallel transects until we had covered the entire project area, including offsite facility areas (which included proposed pipeline and

access corridors).

The day of the flight was clear and calm. As we could clearly see the large devil club (Oplopanax horridus) leaves below, we knew that we were visually penetrating to within one-half to one meter (two to three feet) of the forest floor. In many places we could see the actual ground surface. Neither the pilot and myself nor our two assistants (Ms. Goldman and Mr. Sahin) noted the presence of any historic or prehistoric feature during the flight over the project site.

A third part of our survey effort was an attempt to determine the recency of the forest covering the project site. We counted the rings on trees that had been felled at various locations over the project site. Rings were counted at four stations. The samples yielded the following ages as listed in Table 1 below.

We also noted that the rings appeared thickest for the period between about 35 and 65 years ago. This could indicate a period of greater precipitation or perhaps a greater amount of runoff during those years.

TABLE 1

AGE ESTIMATES OF TREES SAMPLED

Station 1	Sample 1	25± 2	years
	2	67± 20	
	3	74± 10	
	4	83± 5	
Station 2	Sample 1	55± 10	years
	2	70± 5	
Station 3	Sample 1	87± 5	years
	2	117± 10	
Station 4	Sample 1	37± 10	years
	2	62± 10	
	3	71± 5	

trees sampled were *Populus trichocarpa*

During the course of the field survey program, the opportunity arose for us to speak with local informants. Particularly helpful were: Dorothy Clifton, Director of Archives Alive; Judy Kreitzer, Curator of the Valdez Historical Museum; and Marion Ferrier and Dortha Schmidt, both long time residents of the community. Later, questionaires were mailed to John Kelsey, George Berg,

Owan Johnson and James Dieringer, all of whom are long time residents of Valdez.

None of these informants reported knowing of any historic or prehistoric site within the project area. Mrs. Dortha Schmidt did report an historic period hunting cabin, built by her husband, to be near the project area. This cabin, however, was built during the 1920's and was recently burned to the ground.

CONCLUSIONS

Several lines of evidence suggest that no significant historic or prehistoric sites are located within the boundaries of the project site and related offsite facility areas.

Prehistoric sites are not likely to be found on the project site. The area has apparently only recently been deglaciated. Subsequent to deglaciation the area was, and still is, an outwash plain of the Valdez Glacier. The lack of soil over the project site indicates an unstable surface probably often scoured by wind and water erosion. If small temporary aboriginal campsites did

exist they would have been damaged or more likely destroyed by these erosional processes.

Historic period aboriginal sites are also not likely to be found on the project site. Of the many references available, through memoirs and military reports, we have found none that mention Indian or Eskimo encampments on or near the project site. Nothing in the settlement/subsistence patterns described in the ethnographic literature suggests that the project site would have attracted aboriginal peoples.

Sites associated with the Gold Rush or related early military explorations are not documented to have been located within the limits of project boundaries. Historical sites which might have been associated with later mining claims are not significant within the framework of existing historic preservation law; and if they exist they are unknown to the Valdez residents with whom we spoke.

This latter point suggests that no locally significant historic sites are located within the boundaries of the project site. Sites of this period, determined to be of

significance, were not reported by the Alyeska pipeline archaeological survey which covered the area of the proposed product pipelines and terminal.

Recent historic period litter may be found on the project site. This may even be likely since the floodplain has, in the past, been used as a material source, as a hunting ground, and as a pathway to mining claims on Slater Creek and beyond. None of this litter, if it exists, would be considered historically significant.

Finally, during the course of the field survey (approximately fourteen person-days total), no remains from prehistoric or historic human activities were found. Both the on-the-ground and the aerial surveys produced negative results.

Although Valdez appears to be one of the best documented communities in Alaska, we were unable to find any reference to significant historic sites within the project area or related offsite facilities areas.

REPORT FROM THE STATE HISTORIC PRESERVATION OFFICE

Consultation with the Alaska State Historic Preservation Office produced confirmation that no sites listed on the National Register of Historic Places, or known to be eligible for listing on the Register, are located within the boundaries of the project area or related offsite facilities. A letter to that effect is attached as an appendix to this report.

EFFECTS OF CONSTRUCTION AND OPERATION OF THE PROPOSED FACILITY

Construction and operation of the proposed ALPETCO facility near Valdez poses no known threat to any property listed in, or eligible for inclusion in, the National Register of Historic Places.

CONTINGENCY MITIGATION PLANS

In the remote possibility that construction or operation activities unvail the presence of a property, determined to be potentially significant on a local, state or national level, the Alaska State Historic Preservation Office should be contacted immediately. It is the responsibility, under existing historic preservation law, of the permitting Federal agency(s) and the State

Historic Preservation Office and ALPETCO to develop appropriate mitigation measures.

Such a discovered site would almost certainly be very small in area. Avoidance of the area might be the preferred mitigation plan. Any archeological site could be quickly excavated; and any historic site or object could be as quickly documented and removed to an appropriate repository.

UNAVOIDABLE ADVERSE ENVIRONMENTAL IMPACTS OF THE PROPOSED FACILITY DEVELOPMENT

With respect to cultural resources, when appropriate mitigation measures are taken, we would not anticipate any remaining adverse effects.

REFERENCES CITED

Abercrombie, Captain W. R., Copper River Exploring Expedition in Alaska: 1899, U.S. Government printing Office, 1900.

Ackerman, Robert, oral communication, 1979.

Aigner, Jean, Bruce Fullum, Douglas Veltrie and Mary Veltrie, Preliminary Report on Remains from Sandy Beach Bay, A 4300 - 5600 B.P. Aleut Village., in Arctic Anthropology, 13(2), University of Wisconsin Press, 1976.

Anderson, Douglas D., A Stone Age Campsite at the Gateway to America, in Scientific American, 218(6), 1968.

Beach, Rex E., The Iron Trail, A.L. Burt Publishers, New York, 1913

Birket-Smith & Frederica De Laguna, The Eyak Indians of the Copper River Delta, Alaska., Levin & Munksgaard Publishers, Copenhagen, 1938.

Clifton, Dorothy, Clifton Collection, University of Alaska Archives, Fairbanks, n.d.

Dumond, Don, A Summary of Archeology in the Katmai Region, University of Oregon Anthropological Papers, No. 2, University of Oregon Press, 1971.

_____ Prehistoric Cultural Contacts in Southwestern Alaska, in Science, 166: pp. 1108-1115, 1969a.

_____ The Prehistoric Pottery of Southwestern Alaska, Anthropological Papers of the University of Alaska, 14(2), University of Alaska Press, 1969b.

_____ On the Presumed Spread of Slate Grinding in Alaska, Arctic Anthropology, 5(1), 1968.

_____ & L. Conton, H. Shields, Eskimos and Aleuts of the Alaska Peninsula, Arctic Anthropology, 12(1), 1975

Field, William O., Glaciers of the Chugach Mountains., in Mountain Glaciers of the Northern Hemisphere., Volume 2, pp. 299-493, Department of Exploration and Field Research, American Geographical Society, Under Contract DA49-092-ARO-39(X) for the Earth Sciences Division, U.S. Army Engineer Topographic Laboratories, 1975.

Fitzhugh, William, Prehistoric Maritime Adaptations of the Circumpolar Zone., Aldine Publishers, 1975.

Giddings, J. L., Ancient Men of the Arctic., Alfred A. Knopf, New York, 1967.

_____ Onion Portage and Other Flint Sites of the Kobuk River., Arctic Anthropology, 1(1), 1962.

Hazelet, George C., The Journal of George C. Hazelet: Being An Account of His Journey From Nebraska to the Copper River Basin in Alaska Over the Valdez Glacier in 1898 and Continued Exploration of this Area to 1902., Puget Sound Maritime Historical Society, 1964.

De Laguna, Frederica, Chugach Prehistory: the Archaeology of Prince William Sound., University of Washington Press, 1956.

_____ The Archaeology of Cook Inlet, Alaska., University of Pennsylvania Museum, Philadelphia, 1934.

Larsen, Helge & Froelich Rainey, Ipiutak and the Arctic Whale Hunting Culture, Anthropological Papers of the American Museum of Natural History 42, 1948.

Laughlin, William S., Aleuts: Ecosystems, Holocene History, and Siberian Origin, Science, 189(4202), 1975

_____ Human Migrations and Permanent Occupation in the Bering Sea Area., The Bering Land Bridge, David Hopkins, ed., Stanford University Press, 1967.

_____ The Earliest Aleuts, Anthropological Papers of the University of Alaska, 10(2), 1963.

Laughlin, William S., Archaeological Investigations of Umnak Island, Alaska., Arctic Anthropology, 1(1), 1962.

_____ The Alaska Gateway Viewed from the Aleutian Islands, in The Physical Anthropology of the American Indian, Viking Fund Press, 1951.

Laughlin, William S. & Jean Aigner, Preliminary Analysis of the Anangula Unifacial Core and Blade Industry, Arctic Anthropology, 3(2), 1966.

Laughlin, William S. & G. Marsh, The Lamellar Flake Manufacturing Site on Anangula Island in the Aleutians., American Antiquity, 20(1), 1954.

McCartney, A. P., Prehistoric Cultural Integration Along the Alaska Peninsula, Anthropological Papers of the University of Alaska, 16(1), 1974.

Okada, H. & A. Okada, Preliminary Report of the 1972 Excavations at Port Moller, Alaska, Arctic Anthropology, 11 (supplement), 1974.

Orth, Donald J., Dictionary of Alaska Place Names., Geological Survey Professional Paper 567, U. S. Government Printing Office, Washington, 1971.

The Pathfinder of Alaska, published by the Pioneers of Alaska, issues January 1924 and February and April 1925.

Schrader, F. C., A Reconnaissance of a Part of Prince William Sound and the Copper River District, Alaska, in 1898., Twentieth Annual Report of the U. S. Geological Survey, 1899.

Storm, L. W. S., Map of the Valdez Gold Region, publisher unknown, 1911.

Tarr, Ralph S. & Lawrence Martin, Alaskan Glacier Studies, The National Geographic Society, Washington, 1914.

Valdez Transportation Company, Alaska: a travelogue of the Richardson and Steese Highways, 24 pp., circa 1925.

Workman, William, Ahtna Archaeology: A Preliminary Statement., in Prehistory of the North American Sub-Arctic: The Athapaskan Question, Proceedings of the Ninth Annual Conference of the Archaeological Association of the University of Calgary, pp. 22-40, 1977.

_____ Prehistory of Port Moller, Alaska Peninsula, in Light of Fieldwork in 1960., Arctic Anthropology, 3(2), 1966.

STATE OF ALASKA

DEPARTMENT OF NATURAL RESOURCES

DIVISION OF PARKS

JAY S. HAMMOND, GOVERNOR

619 Warehouse Dr., Suite 210
Anchorage, Alaska 99501

July 19, 1979

Re: 1130-13

Mr. Glenn Bacon
Consultant Archaeologist
Alaskarctic
P. O. Box 397
Fairbanks, AK 99707

Dear Glenn:

Reference our telephone conversation yesterday concerning the ALPETCO project and historic preservation concerns. This will confirm that there are no known properties which are eligible for the National Register of Historic Places located in the project area, nor are there any properties which are already listed on the Register located in that area.

Should we be able to provide any further assistance, please do not hesitate to contact us.

Sincerely,

Douglas Reger, Deputy SHPO

for William S. Hanable
State Historic Preservation Officer

TLD:tld

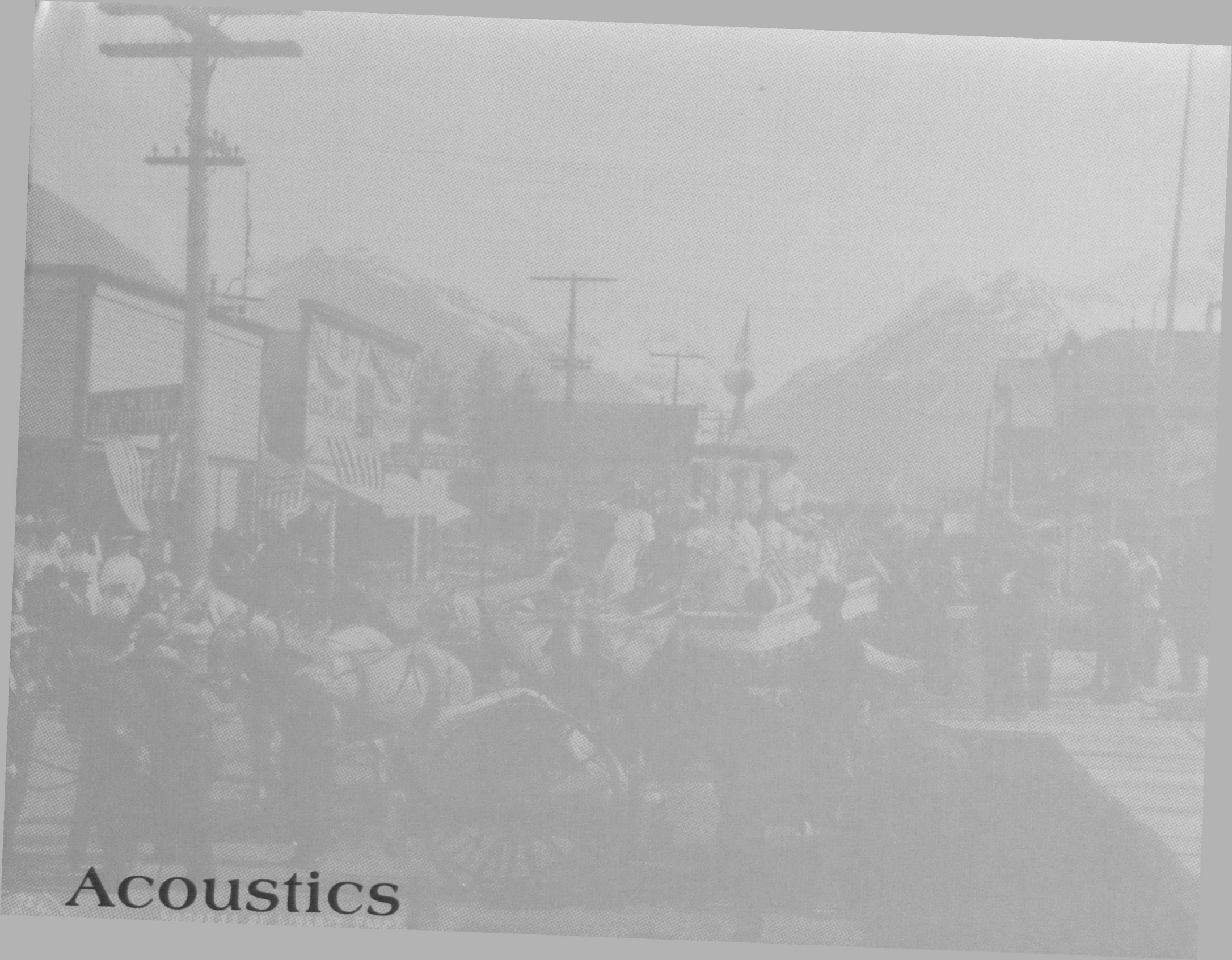

Acoustics

ACOUSTIC ENVIRONMENT

SECTION 5.5.1 INTRODUCTION

Noise is usually defined as unwanted sound. Sound is a pressure oscillation that propagates through an elastic material such as air. Its characteristics can be described by the following:

1. level, measured in decibels (dB), which indicates the magnitude (or loudness) of the sound pressure;

2. frequency, measured in Hertz(Hz), which indicates the oscillation rate (or pitch) of the pressure oscillations; and

3. time history, measured using various descriptors in units of dB, which indicates the levels of sound that occur over a particular time period.

Environmental noise is usually measured using the A-weighted sound level, L_A, in units of dB, sometimes symbolized dBA or dB(A). The A-weighting is an adjustment based on human hearing sensitivity at different frequencies.

The time history of noise can be indicated using the following descriptors:

Descriptor	Symbol
Equivalent sound level (the A-weighted level of a constant sound which, in a given situation and time period, has the same sound energy as does the time-varying sound being considered)	L_{eq}

Descriptor	Symbol
24-hour equivalent sound level	$L_{eq(24)}$
Day-night sound level (the 24-hour equivalent sound level with a 10 dB penalty applied to the 10:00 p.m. - 7:00 a.m. nighttime levels)	L_{dn}
Maximum A-weighted sound level for a given time period or event	L_{max}
Background ambient sound level (usually indicated by the statistical sound level L_{90}, the A-weighted sound level exceeded 90 percent of the time)	L_b

Sound is also sometimes measured using the unweighted sound pressure level, L_p, for each octave, 1/3 octave or 1/10 octave frequency band in order to show the frequency characteristics. (An octave is the interval between two frequencies having a ratio of 2:1. The preferred octaves have middle frequencies of 31.5, 63, 125, 250, 500, 1000, etc. Hz.)

The A-weighted sound level is used in this report because it is most universally accepted and correlates well with human judgments of a sound's loudness. A disadvantage of the A-weighted level is that it does not indicate band sound pressure levels, which are needed to accurately predict long-range sound propagation or to evaluate whether annoying characteristics such as pure tone components are present. Calculations of refinery noise were therefore based on octave band sound pressure level measurements for an existing refinery.

Descriptors such as L_{dn} which are based on the equivalent sound level, L_{eq}, are currently favored by EPA because they are good indicators of cumulative noise exposure. A disadvantage of descriptors based on L_{eq} is that they do not indicate the magnitude of fluctuations in sound level and therefore do not indicate the L_{max} which might cause sleep interference, or certain other temporal characteristics such as impulsiveness (having abrupt onset and rapid decay) or periodicity (varying repetitively) which are potentially annoying.

When comparing A-weighted sound levels, a difference of 1-2 dB is considered to be barely perceptible; a difference of 3-5 is clearly perceptible; and a difference of 7-10 dB is judged as an approximate halving or doubling of loudness. The judgment of a sound's loudness is therefore not directly proportional to the sound level, since loudness is judged to double for each 7-10 dB increase in level.

If two sounds are combined, the overall sound level is not more than 3 dB greater than the level of the louder sound. Therefore, if two equal sounds of level N dB are combined, the overall sound level is N+3 dB, not Nx2 dB.

In general application, adverse effects of noise on people include the following considerations:

1. Psychological effects such as annoyance or dissatisfaction which sometimes result in community action. These effects depend not only on the level of noise, but also on the amount of increase in noise when new noise sources are introduced into an area.

2. Task or activity interference such as interference with sleep or speech communication.

3. Physiological effects such as hearing loss.

Criteria for evaluating environmental noise are generally based on considerations of the preceding effects and the types of land use or activities being affected. A discussion of criteria is contained in Section 6.5.2.

SECTION 5.5.2 NOISE SENSITIVE LAND USES

Residential and recreational areas are considered the principal noise sensitive land uses. The areas of primary concern are shown in Figure 5.5.3-1, and include the following:

1. Robe River Subdivision. This is a permanent residential development with 125 of 195 lots already developed.

2. Approximately 180 acres of land between Robe River Subdivision and the Alpetco site. This area is proposed for 300-600 permanent residences.

3. Rainbow Trailer Court. This area is proposed for construction of 72 condominium units.

4. Several existing houses west of the Richardson Highway one kilometer (2/3 mile) north of Dayville Road.

5. Zook Subdivision. The Planning Director indicates that this area probably will be rezoned to a more intensive zone and should therefore be considered a residential area in transition to commercial or industrial use.

6. Bay Port, Southcentral and Allied Trailer Courts. These are located near the airport on land leased by the City and designated for future industrial development. The trailer courts are likely to be phased out after the Alpetco construction or when permanent housing becomes available elsewhere.

7. Residential areas in New Valdez. These are at least 7 kilometers (4-1/2 miles) from the Alpetco site, and are therefore only indirectly affected by noise from the project.

8. Glacier Wayside Campground. This is an overnight facility just east of the airport.

9. Mile 1-1/2 Campground. This is a daytime facility only.

Valdez averages 3.0 people per household. It is estimated that between 1,500 and 2,500 people will eventually reside in permanent residential areas within 1.6 kilometers (one mile) of the Alpetco site.

SECTION 5.5.5 EXISTING SOUND LEVELS

Sound levels were measured at potentially noise sensitive locations in May, 1979 to determine the existing baseline conditions. The measurements consisted of 24-hour digital noise monitoring in the two residential areas which are closest to the site, plus representative daytime and night-time samples of shorter duration at these and six other locations. Essential results of the measurements are shown in Figures 5.5.3-1,2 and 3.

Sound levels in the Valdez area are quite low, with occasional traffic or light aircraft flyovers being the only significant sources of noise. L_{dn} is generally in the low-to-mid 40 dB range, except near the Richardson Highway or the airport, where it is about 10 dB higher. The L_{dn} levels are typical of a rural area with little traffic and no significant industries. By comparison, residential areas near large cities are usually about four times (15-25 dB) noisier.

The measured background ambient noise as indicated by the statistical L_{90} level was mainly due to cascading water, which was most noticeable at the northern measurement locations near the mountains. This noise would only be

present during spring and summer. During fall and winter, the background ambient noise levels on which refinery noise would be superimposed are estimated to be about 24 dB during nighttime and 26 dB during daytime throughout the area, based on the measurements made at the two southern locations. (These are the average L_{90} background ambient levels. Minimum levels are below 17 dB.) The very low background levels are typical of a wilderness area. By comparison, background ambient levels in an air conditioned office are usually four times (20 dB) louder, or about 45 dB.

SECTION 6.5.1 SHORT-TERM EFFECTS

Construction noise would be generated by trucks and other earthmoving equipment; materials handling equipment; stationary equipment such as pumps, generators and compressors; portable power tools; impact equipment such as pile drivers; and possibly blasting. Environmental impacts of construction noise are generally considered temporary, with limited potential for mitigation. Criteria for evaluating environmental noise are discussed in Section 6.5.2.

Because of the relatively large distances to noise sensitive locations, construction within the site and traffic from the dock area in Old Valdez to the site via the primary access road is not expected to significantly affect residential or recreational areas. However, pile driving is considered an exception because of the high sound levels which are often produced and the impulsive nature of the sound.

During construction of the secondary access road and product pipeline, L_{dn} levels could be as high as 79 dB at residences in Robe River Subdivision adjoining the construction site. The impact of this noise would be significant, though temporary.

During the peak construction year of 1982, increased vehicular traffic in the Valdez area would increas L_{dn} levels by about 4-7 dB, depending on the amount of heavy vehicle traffic operating outside the construction corridor. Increased automobile traffic alone would increase levels by about 4 dB. This impact would be temporary until 1984 when the facility is in operation, at which time the traffic noise would be about 3 dB above existing levels.

Increased air traffic would increase L_{dn} levels near the airport by about 3 dB during construction (based on air traffic data for the Alyeska construction period), provided that regular jet traffic is not introduced. If jets are used, as they were during the Alyeska construction, the noise increase would be greater. Service by one jet aircraft per day would by itself produce an estimated L_{max} of about 90 dB and an L_{dn} of about 47 dB in New Valdez and the other permanent residential areas. The increase in L_{dn} would generally be 5 dB or less. However, the increase in L_{max} would generally be 10 dB or greater.

SECTION 6.5.2 PERMANENT EFFECTS

Noise impacts of the facility are evaluated using guidelines for preparing and reviewing Environmental Impact Statements[1] and the EPA Levels Document[2] from the EPA Region 10 Environmental Evaluation Branch. The basic levels discussed in these documents are listed in Tables 6.5.2-1 and 6.5.2-2.

There are currently no Federal, State or local quantitative limitations on levels of noise which the facility may produce at receiving properties. A City nuisance ordinance does prohibit unauthorized nighttime construction noise and noise from unmuffled engines, blowers or fans which would "cause annoyance to the public."

The maximum permissible noise exposure of workers during construction and operation of the facility is established by the U.S. Occupational Safety and Health Administration (OSHA) and the Alaska Department of Occupational Safety and Health. The maximum permissible levels are 90 dB for an eight hour exposure, or higher levels for shorter exposure times. Occupational noise is regulated by the Federal and State agencies.

Most refinery noise is caused by furnaces, flares, air coolers, electric motors, control valves, centrifugal com-

pressors, gas turbines, gears and engines. Sound levels from facility operation were calculated using the following information:

1. Octave band sound pressure levels measured at varying distances from the ARCO refinery at Ferndale, Washington during normal refinery operation. The levels were normalized by 1 dB to account for the Valdez refinery's higher capacity (150,000 versus 110,000 bpd). A-weighted sound levels for the ARCO refinery were found to be in good agreement with sound level data for other refinery installations.

2. Atmospheric sound absorption for the average temperature condition in Valdez and 70 percent relative humidity.

3. Excess attenuation (reduction of noise) due to ground effects as measured for the relatively flat terrain near the ARCO refinery. (Fresh snow has been found to increase ground attenuation at low frequencies and decrease attenuation at mid-to-high frequencies. The effects of other snow conditions are not known.)

4. Excess attenuation for sound propagating through woods, as reported in recent literature.

5. The computed topographic attenuation provided by Knife Ridge.

6. The currently proposed site plan, which would locate the process area in the northern part of the site.

Results of the sound level calculations and comparisons with existing levels are given in Tables 6.5.2-3 and 6.5.2-4 for normal and temperature inversion atmospheric conditions, respectively. (Existing background ambient L_b) levels, which were estimated to be 24-26 dB throughout the area during fall and winter when there is less noise from runoff of water from the mountains, and measured in the mid-20 dB range south of the site, are taken to be 25 dB.)

During normal atmospheric conditions, the noise increase due to refinery operation would be slight or nonexistent at all of the permanent residential areas. However, if trees are cleared between the site and Robe River Subdivision, refinery noise would probably become the predominant background ambient noise in the subdivision. Substantial noise increases of 10 dB or more are predicted for the Southcentral Trailer Court, which is a temporary residential land use, and the Glacier Wayside Campground. Because the campground has no permanent residents, the noise <u>increase</u> per se should probably

not be considered an impact. At these two locations, refinery noise would be predominant but would not exceed the noise impact criterion of L_{dn} 55 dB.

During temperature inversion, when attenuation due to ground effects, trees and topography is reduced or eliminated because of refraction (bending) of the sound path, refinery noise would be noticeable or predominant at most of the noise sensitive locations. Impacts would be greatest at the closest residential locations and the Glacier Wayside Campground. Background ambient levels could be increased by more than 10 dB at these locations. However, L_{dn} would probably not increase by more than 5 dB at any of the residential sites, and L_{dn} would not exceed 55 dB at any sensitive location. The noise increases could be considered significant or very serious impacts, depending on whether the increase over existing levels is less than or greater than 10 dB. Surface-based inversions are estimated to be present in the Valdez basin about 20 percent of the time, based on stability classification data (see Section 5.4.1.2). Vertical temperature profiles have not yet been measured, however.

During upset conditions, which would be expected to occur less than 5 times a year, high noise levels would be produced at the emergency flare. Levels of approximately 60-70 dB (or 80 dB during inversions) could occur at the closest

permanent residential locations (Robe River Subdivision and the proposed adjoining subdivison) and close to 90 dB at the Glacier Wayside Campground. Such high levels could result in annoyance and complaints if they occur during daytime, and could awaken people in the existing and proposed permanent residential areas south of the Alpetco site if they occur at night.

After the facility is in operation, about 580 workers would enter and leave the facility each day by the primary access road. The traffic noise from the access road would not impact permanent residential areas such as Robe River Subdivision, which are at least 1.6 kilometers (1 mile) from this road.

Estimated maximum noise levels, L_{max}, from trucks using the secondary access road would be 62 dB at the closest part of Robe River Subdivision and 76 dB at the propsoed adjoining subdivision. The existing average hourly L_{max} in Robe River Subdivision was measured to be 59 dB during daytime and 51 dB during nighttime.

The proposed subdivision northeast of Robe River Subdivision would be impacted more because it would be closer to the road. Since it is likely that the road will be used mainly for inspection and maintenance of the pipeline, frequent truck traffic is not expected.

There would be a permanent increase of about 3 dB in traffic noise due to general population increases affecting New Valdez and areas along the Richardson Highway. This increase represents a slight impact.

The short-term noise impacts of introducing regular jet aircraft service (see Section 6.5.2) could potentially become permanent. However, it is likely that permanent jet service would not be feasible (see Section 6.10.7.2).

Refinery noise is likely to cause avoidance or abandonment of habitats by some species of wildlife. Fixed noise sources tend to force wild animals back into quieter areas, thereby reducing the land area available for habitation and reducing population.[3,4] It is generally believed that noise which causes masking of signals can interfere with mating and avoidance of predators by animals which rely on hearing. Because only a limited amount of research has been done concerning effects of noise on wildlife, it is not yet possible to accurately quantify impacts or determine which species would be most affected.

SECTION 6.5.3 MITIGATION MEASURES

This section discusses various measures which could be used to mitigate the noise impacts of refinery construction and operation.

During the construction phase, avoid construction near existing residential areas (such as Robe River Subdivision), and pile driving during the nighttime hours. The distances to existing residences will mitigate most noise impacts commonly associated with construction. If excessive noise is found to be a problem during construction of the secondary access road and products pipelines adjacent to Robe River Subdivision, limited mitigation is possible by using procedures described in the EPA Noise Guidelines for Environmental Impact Statements.

Numerous products for abatement of refinery noise are available if abatement should be found necessary. Alpetco has indicated that the latest design and technology will be used to control noise emissions from the refinery to protect the workers and to avoid an impact on areas surrounding the facility.[6] Considerations should be given to the following suggested design goals:

1. Avoid significant noise impacts by limiting the amount of noise increase over existing conditions to 5 dB in permanent residential areas. This goal should apply during inversions, if these are found to occur frequently.

2. Attempt to maintain the present tranquility of the permanent residential areas during non-inversion conditions by reducing the refinery noise to a level where it would not be distinctly noticeable above the existing background ambient noise.

These goals imply noise reductions to a typical refinery of approximately 7 dB if Robe River Subdivision is the closest permanent residential area and 10 dB if the area between Robe River Subdivision and the Alpetco site is developed for residential use. It should be noted that noise reductions are necessary only for the noisiest equipment in order to achieve an effective overall noise reduction.

During infrequent upset conditions, the high noise levels produced could result in sleep interference. The principal noise sources would be the steam vents and flare stack. Steam vent noise can be mitigated by using multiport or Coanda-effect nozzles on the steam injectors. Quiet type "soft-mix" flares and enclosed ground flares without steam injection are available and should be evaluated.[7,8]

SECTION 6.5.4 UNAVOIDABLE ENVIRONMENTAL IMPACTS

During construction of the facility, temporary construction noise would mainly affect the Robe River Subdivision while the secondary access road and products pipelines are being constructed. There would also be a general area-wide L_{dn} noise increase of 4-7 dB due to increased vehicular traffic and an increase of at least 3 dB in aircraft noise near the airport during the construction phase.

Noise from normal operation of the facility may be noticeable at the closest residential areas and the Glacier Wayside Campground during temperature inversion atmospheric conditions. Noise levels in these areas would be highest during upset conditions at the refinery unless noise from steam vents and flares is mitigated.

There would be a permanent L_{dn} increase of about 3 dB in traffic noise affecting New Valdez and areas along the Richardson Highway, and possible increases of 3-11 dB in L_{max} affecting parts of Robe River Subdivision near the refinery's secondary access road.

Refinery noise is likely to cause avoidance or abandonment of habitats by some species of wildlife.

REFERENCES

1. Noise Guidelines for Environmental Impact Statements, U.S. Environmental Protection Agency Region X, Seattle, Wa., January 1975.

2. Information on Levels of Environmental Noise Requisite to Protect Public Health and Welfare with an Adequate Margin of Safety, U.S. Environmental Protection Agency, Washington, D.C., March 1974.

3. Ruth, J. S., Reactions of Arctic Wildlife to Gas Pipeline Related Noise, NOISE/NEWS, 6, 1, 1977.

4. Janssen, R., Noise and Animals: Perspectives of Government and Public Policy, Effects of Noise on Wildlife, Academic Press, New York, N.Y., 1978.

5. Busnel, M. C. and Molin, D., Preliminary Results of the Effects of Noise on Gestating Female Mice and their Pups, Effects of Noise on Wildlife, Academic Press, New York, N.Y., 1978.

6. A Refinery and Petrochemical Facility for the Processing of Alaska State Royalty Crude Oil in Alaska - Project Description, Alaska Petrochemical Company, March 1979.

7. Straitz, J. F., Solving Flare-Noise Problems, Inter-Noise 78 Proceedings, NOISE/NEWS, Poughkeepsie, N.Y., 1978.

8. Seebold, J. G., Noise Control in the Petroleum Refining Industry, Inter-Noise 76 Proceedings, NOISE/NEWS, Poughkeepsie, N.Y., 1976.