EPA-650/4-74-015

September 1973

Environmental Monitoring Series

SURVEY OF MANUAL METHODS OF MEASUREMENTS OF ASBESTOS, BERYLLIUM, LEAD, CADMIUM, SELENIUM, AND MERCURY IN STATIONARY SOURCE EMISSIONS

Office of Research and Development
U.S. Environmental Protection Agency
Washington, DC 20460

EPA-650/4-74-015

SURVEY OF MANUAL METHODS OF MEASUREMENTS OF ASBESTOS, BERYLLIUM, LEAD, CADMIUM, SELENIUM, AND MERCURY IN STATIONARY SOURCE EMISSIONS

by

D. M. Coulson, D. L. Haynes,
M. E. Balazs, and M. P. Dolder

Stanford Research Institute
Menlo Park, California 94025

Contract No. 68-02-0310
ROAP No. 26AAG
Program Element No. 1HA327

EPA Project Officer: M. Rodney Midgett

Quality Assurance and Environmental Monitoring Laboratory
National Environmental Research Center
Research Triangle Park, North Carolina 27711

Prepared for

OFFICE OF RESEARCH AND DEVELOPMENT
U.S. ENVIRONMENTAL PROTECTION AGENCY
WASHINGTON, D.C. 20460

September 1973

This report has been reviewed by the Environmental Protection Agency and approved for publication. Approval does not signify that the contents necessarily reflect the views and policies of the Agency, nor does mention of trade names or commercial products constitute endorsement or recommendation for use.

CONTENTS

ACKNOWLEDGEMENTS vi

I INTRODUCTION 1

II SUMMARY OF WORK ACCOMPLISHED 2

III SELECTION OF METHODS OF ANALYSIS 4

A. Asbestos 4
B. Beryllium 10
C. Lead 14
D. Cadmium 15
E. Selenium 20
F. Mercury 21

IV RESULTS OF LABORATORY AND FIELD TESTING 30

A. Asbestos 30
B. Beryllium 35
C. Lead and Cadmium 41
D. Selenium 47
E. Mercury 49
F. Data and Calculations for Lead, Cadmium, and Beryllium Field Samples 49

REFERENCES 55

APPENDIX 1 BACKGROUND INFORMATION 1-1

APPENDIX 2 MANUAL METHODS FOR MEASURING ASBESTOS, BERYLLIUM, LEAD, CADMIUM, SELENIUM, AND MERCURY IN SAMPLES COLLECTED IN STATIONARY SOURCE EMISSIONS 2-1

FIGURES

1 Asbestos Sampling Location at Bag House Exhaust 31

2 Photomicrograph of Asbestos Particles 33

3 First Beryllium Sampling Location 38

4 Second Beryllium Sampling Location 39

5 Lead and Cadmium Sampling Site 45

2-1 Sampling Train 2-2

TABLES

1 Criteria for Selection of Analytical Methods 5

2 Free Energy Values for Various Reactions 23

3 SO_2 Removal at Various Temperatures 25

4 Hg Removal at Various Temperatures 25

5 Mercury Content of Smelter Flue Gas 27

6 Counts of Asbestos Particles in Samples Collected at Asbestos Mill 34

7 Laboratory Measurements of Beryllium Samples..... 36

8 Measurements of Beryllium Field Samples..... 40

9 Laboratory Measurements of Lead Samples 44

10 Measurements of Lead and Cadmium Field Samples..... 46

11 Absorption Spectrum of a Solution of 4,5-Benzopiazselenol in Toluene 48

12 Laboratory Measurements of Selenium 48

13 Lead, Cadmium, and Beryllium Sampling Data 50

ACKNOWLEDGMENTS

Acknowledgment is made to Ilsabe C. Niemeyer for her work on the electron microscopic method of analysis for asbestos. Also appreciated is the assistance provided by Louis J. Salas and August C. Pijma in the collection of field samples.

Appreciation is extended to Thomas E. Ward of the EPA who trained the SRI sampling team in the use of the EPA particulate train; also to John B. Clements, William J. Mitchell, and Rodney Midgett who reviewed the drafts and supplied many helpful suggestions.

INTRODUCTION

Certain reactive elements and some of their compounds and asbestos are found to cause pronounced deleterious effects on human health. Furthermore, some evidence indicates that exposure to even low concentrations of toxic substances such as asbestos, beryllium, lead, cadmium, selenium, and mercury can result in their being assimilated into vital organs, causing subsequent malfunction, irreparable injury, or death. Thus, these toxic substances must be measured and controlled in man's environment.

The purpose of this study is to evaluate existing manual methods for analyzing asbestos, beryllium, lead, cadmium, selenium, and mercury and from this evaluation to provide the best and most practical set of analytical methods for measuring emissions of these elements from stationary sources.

The work performed in this study was divided into two phases. Phase I was limited to surveying sources of information and summarizing the findings in terms of existing methods; totally new methods were not developed. However, in the case of asbestos amd mercury it was necessary to modify existing methods significantly, and some laboratory and field testing was performed during Phase I to develop these two methods.

Phase II was concerned with the testing, evaluation, and modification of the methods of analysis developed during Phase I. Both laboratory and field tests were conducted during this phase of the work.

SUMMARY OF WORK ACCOMPLISHED

During Phase I of this study sources of information were searched for methods of analysis for asbestos, beryllium, lead, cadmium, selenium, and mercury that would be suitable for analyzing stationary source emissions. The primary sources of information were the technical literature, telephone and direct interviews with staff members of companies that are probable stationary sources of emissions of the pollutants, and contact with the Project Officer assigned by the Environmental Protection Agency (EPA). During the literature search we obtained additional background information on the toxicity of the pollutants in this study. This information is presented in Appendix 1.

Methods of analysis were then chosen on the basis of a survey of current knowledge on methodology, ease of using the procedure, availability of the equipment needed to perform the tests, sensivitity based upon proposed EPA standards of emission and threshold limit values (TLV) adopted by the American Conference of Governmental Industrial Hygienists (ACGIH), and specificity requirements. One method was chosen for each pollutant. A detailed discussion of how the methods of analysis were selected is presented in Section III. These methods of analysis are presented in Appendix 2.

Some laboratory and field testing was performed during Phase I for methods of analysis that required modification of existing methods. Much of the methodology for asbestos was newly formulated and laboratory tested. It was also necessary to develop a SO_2 scrubber for use in the mercury method because SO_2 interferes with the collection of mercury. This scrubber was first tested in the laboratory and then field tested at a zinc refinery.

During Phase II the methods of analysis selected in Phase I were tested, evaluated, and then modified if necessary. All methods were initially tested in the laboratory. The asbestos method was tested on samples collected at an asbestos mill. Field sampling was conducted for beryllium at a beryllium machining facility, but only small amounts of beryllium were collected. The methods for lead and cadmium were tested successfully on samples collected at a municipal incinerator in Dade County, Florida. No field tests were conducted for selenium because work had been stopped on this pollutant before field testing began. Field testing was performed on mercury in the development of the method of analysis in Phase I. Further development of the methods of analysis for asbestos and mercury probably should be made before they are ready for routine use in measuring source emissions.

III SELECTION OF METHODS OF ANALYSIS

Sources of information were surveyed to find the best and most practical existing manual methods for measuring emissions of the pollutants included in this study from stationary sources. The requirements of major importance in the selection of methods of analysis, along with their definitions and reason of importance, are listed in Table 1. Considering these criteria and the emission standards proposed or established by the EPA, we chose the following methods of analysis. A method using electron microscopy was chosen for analyzing asbestos. Atomic absorption spectroscopy methods were chosen for beryllium, lead, and cadmium. A spectrophotometric method was chosen for selenium, and flameless atomic absorption spectroscopy was chosen for mercury. The reasons for choosing these methods and the other methods investigated are described in this section.

A. Asbestos

The current knowledge of the health risks of asbestos in gas streams was studied in an effort to determine which characteristics of asbestos should be measured. There seem to be several different opinions on the nature of toxic fibers. Some workers feel that the fibers must be at least 5 μ long to be pathogenic.[1,2] Others feel that smaller particles also represent a serious health risk. According to Schepers,[3]

> The asbestos within the lung which matter, consists of those fibrils which invade the alveolar walls, those which reach the perivascular lymphatics and vascular adventitia, and those which deposit below and within the pleura. These are generally extremely delicate fibrils, less than 0.2 μ in caliber, and difficult to detect through conventional microscopy.

Suzuki and Churz[4] feel that submicroscopic fibers (fibers less than 1 μ

Table 1

CRITERIA FOR SELECTION OF ANALYTICAL METHODS

Requirement	Definition	Importance
Sensitivity	Amount of material that gives a specified response.	To establish a level of sensitivity of amounts of material collected for analysis.
Specificity	Ability to measure only the substance of interest by eliminating interferences.	Interfering substances can cause false interpretation of data.
Precision	Error of the method (often expressed as the coefficient of variation) established by the analysis of many samples containing equivalent amounts of the species of interest.	Lack of precision in a method can make it essentially useless.
Accuracy	Ability to determine the true value.	Most analyses are performed to determine actual amounts of specific substances in specific samples.
Range of analysis	Concentration range in which reliable results can be obtained.	Analyses can yield false results if concentrations are too high or too low.
Stability	Ability of the materials to remain intact over a period of time.	Analytical use of decomposed materials results in false data.
Ease of handling	Skills required to prepare the sample and execute the analytical methods.	Methods requiring advanced skills reduce precision and must be carried out by highly trained personnel.
Time of analysis	Time required to analyze one sample completely.	Examination of numerous samples necessitates a reduced analysis time for completion of each sample.
Cost	Actual monetary expenditure for materials, equipment, and personnel needed.	Examination of numerous samples necessitates low cost per sample.
Availability of equipment	Ability to purchase the required equipment and materials needed for an analysis.	Widespread testing requires easily obtainable supplies.

long) are responsible for most of the biologic effects of asbestos. Therefore, we concluded that it would probably be necessary to determine particle counts and particle size distribution to get meaningful results that could be related to the effects on human health.

Schepers also believes that chrysotile fibers may be more damaging than crocidolite or amosite because the diameter of chrysotile fibers is smaller than that of other asbestos types. We decided to concentrate primarily on the measurement of chrysotile fibers on the basis that approximately 95% of the asbestos produced is chrysotile.

In studies using chrysotile particles from a dust generator on guinea pigs and rats, Holt et al.[5] expressed the opinion that particles of ultramicroscopic dimensions are at least as lethal as long fibers.

Ayer and Lynch[6] reported that asbestos factory dust contains a significant portion of motes and that this portion of the respirable dust decreases in the later operations of asbestos production. They state that

> Fibrous chrysotile asbestos is perhaps of the same order of toxicity as quartz, while the accompanying nonfibrous serpentine and nonasbestos minerals (with notable exceptions, such as quartz) may be considered "inert" dust... since fibers cause asbestosis, a count of fibers from an air sample provides a reasonably direct index of the asbestosis hazard. The British asbestos industry utilizes an informal limit of 4 fibers longer than 5 μ per cc. Until it has been definitely determined which size fibers cause lung disease, it would seem preferable to use an index which included as much of the respirable size spectrum as feasible rather than counting only a particular size fraction. Because of the small diameters of the asbestos fibers, the count obtained will be dependent upon the resolution of the microscopic system employed as well as efficiency of the collecting system. Counts by the 4 mm objective and phase contrast illumination which we use, for example, give approximately one-quarter

> the number of fibers longer than 3 μ and one-twelfth the number of total fibers as revealed by electron microscopy of the same sample. Using a 2 mm objective we see a larger number of fibers and with a 16 mm objective we see fewer.

The EPA has not set allowable emission standards for asbestos because toxic levels are difficult to delineate and because sampling and analytical techniques for source emissions are lacking for this substance. Standards promulgated by the EPA are designed to limit emissions into the atmosphere[7] and are expressed in terms of required control equipment.

In discussing the respirable fraction of dusts based on general considerations, Ayer and Lynch suggested that

> The most applicable for asbestos sampling appear to be those suggested to the Office of Health and Safety of the U.S. Atomic Energy Commission by a group of consultants on January 18-19, 1961, and adopted in AEC regulations. They are:

Percent Respirable	Particle Diameter, μ (unidensity sphere)
100%	< 2
75	2.5
50	3.5
25	5
0	10

> Although not originally proposed for nonradioactive material, these criteria have been used for asbestos by others.

On the basis of the preceding discussion and a considerable volume of literature, we concluded that the results of analytical methods for asbestos in gas streams should possess the following characteristics if a fair measure of the risks to man is to be represented:

- The results should differentiate between asbestos and nonfibrous materials of the same chemical composition.

- The method should be sensitive to individual asbestos particles of all sizes in the respirable fraction, which includes all asbestos particles smaller than 5 μ in their longest dimensions as well as some longer fibers that are respirable.

- If a mass sensitive method not sensitive to individual particles is used, the results must give a good correlation with particle counts and particle size distribution.

To meet these requirements we need a method of sampling that would collect or in some way observe essentially all the asbestos particles shorter than 5 μ as well as longer fibers. Since we were interested only in fibers and not motes, the method of detection and measurement had to be selective.

Most of the good work in the literature on analysis for asbestos in gas streams entails the use of optical microscopy or electron microscopy. However, before choosing either method for the present study, we looked at the alternatives as well.

Atomic absorption could be used to measure the magnesium content of an aggregate sample, but it would not give any information concerning the number and size of the chrysotile fibers.[6] This method should not be used except when other magnesium-containing dust particles, such as serpentine, are known to be absent. Thus, the outlook for the use of atomic absorption analysis in monitoring was not encouraging. Neutron activation analysis yields results similar to those of atomic absorption.[8]

Gadsden et al.[9] described infrared measurements of asbestos collected from air samples based on the sharp absorption band at 2.72 μ.

These measurements could be used if a correlation between the intensity of this absorption and the health hazard could be established for certain types of samples. However, it seemed unlikely that such a correlation could be established except for the monitoring of certain processes in asbestos manufacturing operations in which interfering materials are known to be insignificant. The method requires a sample containing at least 20 μg of asbestos.

X-ray diffraction has been used by Goodhead and Martindale[10] to identify and measure large samples of asbestos fibers. Their method requires a sample in the milligram range and again, as with infrared measurements, gives a measure of the amount of asbestos rather than the number of particles. Thus, it seemed unlikely that this method would be very useful in health risk measurement.

Addingley[11] described the use of a Royco particle counter for measuring air in asbestos manufacturing factories. The Royco instrument gives satisfactory counts for particles over 1 μ in diameter (equivalent diameter). Addingley, however, indicated that all particles of asbestos or nonasbestos are counted by this instrument and that normal pollution of the atmosphere may contribute significant errors in the particle size range from 0.3 to 1 μ equivalent diameter. In spite of these drawbacks, Addingley concluded that at the time of this evaluation the Royco particle counter was the best method for testing dust in asbestos factories. The lack of specificity of the method and the presence of considerable amounts of submicron particles in normal gas streams combine to limit the use of the Royco particle counter to the special cases in which little interference is observed. The Royco instrument may be very useful in determining the sampling times required for more quantitative microscopic and electron microscopic examinations. Thus, it could be used to good advantage in making decisions on gas flow rates and sampling

times with Nuclepore® or Millipore® filters. Before the Royco instrument can be evaluated as a health hazard monitor, more research should be done on its use for airborne asbestos particle monitoring in asbestos factories.

Considering the current knowledge of methods for monitoring airborne asbestos and the lack of definitive information on health hazards, we concluded that the method for obtaining useful data on the measurement of asbestos sources must include both identification and size distribution as well as particle counts. Thus we chose electron microscopy as the most promising method.

The technical literature discriptions of the method of preparing samples for examination with an electron microscope were found to be brief and inadequate. After several telephone conversations with people active in the field, we were able to get satisfactory results in the laboratory. The procedure given in Appendix 2 for mounting a sample on an electron microscope grid is based on the work of Frank et al.[12] with modifications suggested by Murchio.[13]

B. Beryllium

Several methods have been developed for the microquantitative analysis of beryllium. All methods except colorimetry employ essentially the same gas sampling techniques, i.e., a technique that uses a Millipore® or cellulose paper filter to catch the beryllium contaminant.* The filter is then processed by wet or dry oxidation, and the residue is treated as necessary for the quantitative determination used, i.e., colorimetry, gas chromatography, atomic absorption, fluorometry, emission spectrometry, or

---

* Recent studies by EPA personnel have demonstrated that beryllium particles penetrate filters under certain conditions. Therefore, collection efficiency of filters is uncertain.

detection by nuclear radiation. The processing of the filter can become lengthy if many other metals interfere with the identification and measurement of beryllium.

Colorimetry must take into consideration metal contaminants that interfere with the determination of beryllium. To reduce interference from other metals, McClosky[14] developed a method using aluminon reagent (ammonium aurintricarboxylate) to replace the Zenia method. McClosky's method improved the detectability from 2.5 μg to 0.3 μ. Although this method is useful, it is lengthy and requires quantitative precipitation, filtering and washing, redissolving, and finally a 60-minute color development period before measurements are taken. Krivoruchko[15] presents another colorimetric method that is equally as complex, but ultimately sensitive and useful.

Gas chromatography is a useful method in that the sample needed for sensitive detection need be only one-third the size of that needed for colorimetry;[16] however, a relatively lengthy preparation is required to remove interfering ions (Fe^{+3} and Al^{+3}) from gas chromatography samples. Quantitative extractions are used that can be, at best, a source of error. Wolf et al.[17] have done some preliminary work on beryllium in ambient air.

With the advent of the nitrous oxide-acetylene flame in atomic absorption, Bokowski[18] has used this tool for the microquantitative analysis of beryllium. This method has a sensitivity of 0.03 μg/ml/%-absorption and is not affected by interfering ions as they are easily quenched with 8-hydroxyquinoline. Many metals enhance the absorption, thereby causing positive errors, as is shown in the paper by Fleet et al.[19] In amounts up 4000 μg/ml this enhancement can be masked by making the solutions 10,000 μg/ml in potassium.

Fluorometry has also served as a useful tool in the determination of beryllium; however, it requires several quantitative treatments before the final measurement is actually made because, like colorimetry, it also suffers the problems of interfering ions. Buffers, diethylenetriamine-pentacetic acid, and other chelating substances are used to remove these ions. Initially, when fluorometry was used, some anomalous results would occur. Sill et al.[20] identified the cause as the absorption of beryllium on the walls of glass containers by anion exchange centers. They corrected the problem by storing all glass containers in 2 M hydrochloric acid. This procedure cleaned the anion exchange centers from the walls of the glass containers. Although sensitivity was enhanced by the use of various filters, some difficulty with interfering ions was still experienced.

Emission spectrometry is one of the most sensitive and useful methods found in the literature for the analysis of beryllium. In this method, as in all the methods mentioned, the sample is collected on a cellulose filter paper. The sample is then either wet digested and the solution containing the beryllium is reduced to 1 ml or less and placed in an absorbing carbon electrode for spark emission, or it is dry ashed and the residue is placed in a carbon electrode. Fitzgerald[21] merely rolled the filter paper containing the sample and placed it in the arc to be oxidized while being analyzed. The emission spectrometric method of analysis is sensitive (0.001 μg),[22] quick (1 sample per minute), and generally requires less handling or treatment of the sample than colorimetry, gas chromatography, and fluorometry.

Churchill and Gillieson,[23] Webb et al.,[24] and Rozsa et al.[25] have developed direct reading spectrographic systems in which the gas sample is drawn into a spark chamber or intermittent arc and the beryllium determination is made by comparison with the background. By careful

adjustment in focusing on the Be 3130.416 Å line, interference from other elements is avoided. The main difficulty is sensitivity, since in this system material cannot be accumulated as it can in filter paper collecting. In reference to the direct spectrographic monitor developed by Churchill and Gillieson, Darwin and Buddery[26] commented that the prototype machine was an excellent tool when in working order but the amount of highly skilled maintenance it required made it impractical for pilot plant use.

Brauman[27] at the Rocket Propulsion Laboratory at Edwards AFB developed a remarkable beryllium-in-air monitor based on the reaction $Be^9 + \alpha \rightarrow N + \gamma + C^{12}$. The instrument is costly and for extreme sensitivity the time for analysis is significant (2 μg requires 60 minutes). Although this monitor is interesting and useful, it is impractical for general use.

The EPA has established an emission limit of 10 g per 24-hour day as the emission standard for certain beryllium-emitting stationary sources.[28] As an option, the affected sources may elect to comply with an emission limit not to exceed amounts that result in an outplant concentration of 0.01 μg of beryllium per cubic meter of air averaged over a 30-day period. Sample volume must be at least 75 cubic feet, and sampling time must be at least two hours. Sampling procedure adjustments appropriate to the emission capacity of the source will be necessary for analysis of a number of sources with a wide range of emission capabilities.

In considering all the methods mentioned above in conjunction with ease of handling, sensitivity, time required to obtain results, and cost of method and required equipment, it appears that atomic absorption is the method of choice in analyzing beryllium samples. A detailed method of analysis based on the use of atomic absorption spectrophotometry was prepared and is presented in Appendix 2.

C. Lead

Numerous descriptions of the method for particulate lead determinations in gas streams have been found in technical literature. All methods use a membrane or glass fiber filter as the trapping medium for sample collection. The lead sample is generally removed from the filter by acid washes or is ashed to remove organic matter and then treated with acid. In X-ray fluorescence spectroscopy,[29-31] however, the analysis is performed directly on the membrane or glass filter. Impurities in the filter do interfere and the limit of detection is only 1 μg. Also, equipment used is specialized and requires that the data be obtained and interpreted by an experienced technician.

Spectrophotometric determinations of lead using the dithizone[32-35] and hydroxyquinone[36] complexing agents are very precise and are carried out on the acid washes obtained from membrane or glass fiber filters. Since some other inorganic metal compounds interfere with the method, chemical separation is required before final spectrophotometric analysis. The procedure must be performed by an experienced chemist and is lengthy and tedious.

The ring-oven technique[37] of lead analysis uses the precipitation of lead molybdate on filter paper and depends on visual and colorimetric concentration determinations. Constant reference standards are impractical because the samples and standards are light sensitive. The method has a detection range of 0.05 to 2 μg Pb.

Emission spectrographic analysis[38,39] has a sensitivity of better than one part per 20 million for lead analysis in a continuous gas monitoring system. It is applicable to a wide range of other metals. However, the equipment used is specialized, and a high degree of analytical skill is required to perform a quantitative analysis.

The polarographic method[31,36,40-43] of lead analysis is useful in the range of 0 to 15 $\mu g/m^3$ (dissolved in 30 ml of solution or 0 to 0.5 $\mu g/ml/m^3$) in a gas stream and requires a square wave[31,43] polarograph to obtain good responses. Organic impurities and the presence of nitrate ions interfere with the analysis. Although the method does have the advantage of multimetal analysis, the complexity of the technique and the unavailability of polarography in many laboratories make the method a poor choice for lead analysis.

Atomic absorption spectrometry[44-56] is very adaptable to lead analysis. After collection and aqueous extraction of the lead sample, atomic absorption requires only dilution of the sample before analysis can proceed. Organic material must be removed if it is present. Although interferences do exist, most of them can be eliminated during sample preparation or in the measurement step. The method can detect amounts of lead from sources as low as 0.03 $\mu g/m^3$.

The EPA has not yet proposed emission standards for stationary sources of lead. The TLV given by ACGIH is 200 $\mu g/m^3$.[57,58] In the absence of other standards, the method selected should have the capability for analyzing this concentration of lead.

Considering the availability, ease of operation, documentation in the literature, and sensitivity, we chose the atomic absorption method of analysis for particulate lead determinations in source emissions (see Appendix 2).

D. Cadmium

The numerous methods available for analysis of cadmium source emissions include atomic absorption, atomic fluorescence, ultraviolet and visible spectroscopy, polarography, and titrimetric analyses.

Atomic absorption methods,[54,56,59-63] using an air-acetylene flame and a cadmium hollow cathode lamp at 2288 Å, can achieve a sensitivity of 0.25 μg/ml/% absorption. In fact, the sensitivity for cadmium can be increased to ng/ml by using dithizone as a chelating agent according to the method of Sachdev and West.[63] Other available modifications to the atomic absorption spectrophotometer, such as a heated graphite atomizer, will increase the cadmium detection limits to several nanograms per liter using only 20 μl samples.

In the analysis of cadmium by atomic absorption, Ramakrishna et al.[61] reported interferences caused by anions, such as $B_2O_4^{2-}$, SiO_3^{2-}, CO_3^{2-}, HCO_3^-, and $HAsO_4^{2-}$. These interferences are effectively overcome by acidification of the samples or by the addition of disodium (ethylenedinitro) tetraacetate. Pulido et al.[64] found that phosphate in concentrations above 0.1 M could decrease the absorption and that sodium chloride in concentrations above 0.01 M could increase the absorption; however, concentrations this high are not likely to be encountered. If necessary, the phosphate and NaCl interferences can also be removed by extraction of cadmium with dithizone in a solution having an acidity of pH 5 to 9. This treatment results in a higher cadmium concentration and eliminates interfering salts.

Methods of atomic fluorescence spectroscopy[65-76] are similar to atomic absorption spectroscopy. Atomic fluorescence spectroscopy has a cadmium sensitivity of 0.5 ng/ml. Currently, atomic fluorescence methods utilize modified atomic absorption instruments or instrumentation completely fabricated in the laboratory, since commercial atomic fluorescence

instruments are nonexistent. Varian Techtron provides an adapter for atomic absorption instruments, but it has not yet proved to be highly satisfactory. Studies of 41 cations and 18 anions conducted by Cresser and West[68] and by Dagnall et al.[69-70] showed cadmium interferences to be minimal. Bratzel et al.[65-66] showed that sulfate and phosphate tend to enhance the atomic fluorescence signal, whereas aluminum decreases the signal. As reported by Hobbs et al.,[71] organics (which often present problems in atomic absorption) do not interfere with cadmium measurements.

The method of atomic fluorescence spectroscopy may be more sensitive than absorption when refined, especially when modifications in the burner head and flame are incorporated. The usefulness of these modifications has been illustrated by Winefordner and coworkers.[77,78] They used a total-consumption aspirator-burner and compared three flame compositions for the analysis of various metals including cadmium. They reported a cadmium detection limit of 0.2 μg/ml in aqueous solutions when they used an argon/hydrogen/entrained air flame.

Polarography[41,42,79-83] has been used successfully for trace metal analysis of solutions containing several elements including cadmium. Mann[82] claims a practical cadmium sensitivity of 1 μg/ml in a sodium perchlorate solution using a discontinuous voltage sweep for voltametric determinations. Films of surface active compounds can interfere, but this interference is minimized by the addition of chloride ion to the solution. The rapid rate of reduction for cadmium further reduces the effects of potentially interfering substances. Dubois and Monkmann[41] reported "good" sensitivity for polarographic analyses of cadmium; however, no values were given.

Differential polarography[83] is a technique in which the current flowing in one polarographic cell is subtracted from that flowing in another. One cell contains an accurately known solution of cadmium and

the other the unknown cadmium solution; the small current difference can be amplified and precisely measured. This technique is reported to improve the precision of polarography considerably. Practical difficulties in the method include exclusion of atmospheric oxygen. Other chemical interferences were not reported. Minimum solution concentrations that can be detected with the method are about 10 μg/ml.

Titrimetric analyses[84-90] for traces of cadmium have been reported using varied titrants and end point detection methods. Monk and Steed[88] reported cadmium analysis in the range of 2.9 to 39.2 μg using a mercury-calomel electrode system with an EDTA titrant. The percentage of error with this method ranged from 0.3 to 1.7%. At a pH of 10.5, cadmium concentrations of 3.5 and 21.3 μg were analyzed with errors of 0.3 and 0.1%, respectively. The method is most applicable to 10-20 μg quantities of cadmium with a coefficient of variation of a single determination between 0.5 and 1.0%. Other methods[84,89] discuss variations of the EDTA titrant method. These methods can be used to analyze for cadmium over a range of 4 to 20 μg with a standard deviation of 0.14 μg. The method of Schonebaum[89] may be suitable for determining metals in organometallic materials if rigid controls are maintained to obtain good accuracy. However, more studies are needed, and no specific comments are made regarding cadmium compounds.

Spectrophotometric analysis of cadmium has been reported by Saltzman,[91] Boltz and Havlena,[92] and others. Saltzman uses dithizone as the cadmium complexing agent with the addition of cyanide as a suppressant for interfering metals. The colorimetric measurements were made on a Beckman Model DU spectrophotometer in the visible range. Although numerous reagents are used in the analysis, the system as described permits a cadmium sensitivity of 0.05 μg/ml. Anion interference was not investigated.

Boltz and Havlena[92] describe an ultraviolet spectroscopic method in which diethyldithiocarbamate is used as a chelating agent and the complexed cadmium ion is extracted from aqueous solutions with chloroform. The optimum concentration range of the method is 0.5 to 3 $\mu g/ml$ of cadmium in chloroform. Metal ions such as Ag^{+}, Au^{3+}, Bi^{3+}, Cu^{2+}, Co^{2+}, Cr^{3+}, Fe^{2+}, Fe^{3+}, Hg^{2+}, Mn^{2+}, Mg^{2+}, Ni^{2+}, Pb^{2+}, Sn^{2+}, Sn^{4+}, Sb^{3+}, and Zn^{2+} cause interferences, however, and must be removed if accurate results are to be achieved.

The EPA has not established guidelines for stationary source emission standards on cadmium. The TLV given by ACGIH is 83 $\mu g/m^3$ for cadmium in particulates and 166 $\mu g/m^3$ for cadmium in dust.[93] In the absence of other guidelines, the method of analysis selected should be capable of this concentration of cadmium.

Considering these methods for cadmium analysis, the requirements set forth in Table 1, the availability of equipment, and emission levels, we selected atomic absorption spectroscopy as the most proficient and useful method, although in actuality, atomic fluorescence spectroscopy has the greatest sensitivity and shows the least effect from interfering materials. However, the latter method must be held in reserve until the equipment for atomic fluorescence spectroscopy is more readily available.

The titrimetric methods all have the disadvantage of a loss of sensitivity and accuracy in the presence of other metallic ions. The separations required before the measurement can be taken cause loss of time because of increased handling, increased cost because of increased time, and loss of precision and accuracy because each step has a degree of error associated with it. Polarographic and ultraviolet spectroscopy lack the sensitivity needed for the trace analyses required in a stationary source analysis. They also require the removal of interfering ions before the final measurement is made.

Thus, until the equipment for atomic fluorescence spectroscopy develops into a routinely useful analytical tool, we recommend the use of atomic absorption spectroscopy for the analysis of cadmium (see Appendix 2). This technique meets the requirements of sensitivity, accuracy and precision, ease of handling, and availability of equipment without requiring extensive time or cost.

E. Selenium

According to Stahl[94] selenium emissions occur in the refining of various ores, including copper and lead, and in processes for refining sulfur residues. Various manufacturing operations may also result in emissions of selenium related to its use in products such as rectifiers, photoelectric cells, pigments, and others. Several methods of analysis for measuring these emissions of selenium were considered.

Tabor et al.[95] selected a spectrophotometric and fluorometric procedure for analysis for selenium content of atmospheric particulate matter. Their method is the basis for the method chosen for selenium and described in Appendix 2. In this spectrophotometric method, Se(IV) reacts with 2,3-diaminonaphthalene (DAN) in acid solution to give the red-colored 4,5-benzopiazselenol, which is measured at 390 nm. It was found experimentally that maximum absorption came at 380 nm. The method described in Appendix 2 for selenium has been appropriately altered.

Other techniques considered were based on polarography,[96] flame emissions spectrometry,[97] neutron activation,[98] atomic absorption spectroscopy,[99-101] isotope dilution,[102] fluorometry,[95,103-105] catalytic reduction, [106,107] and a variety of optical spectrophotometric methods.[95,108-111]

Standards for stationary source emissions of selenium have not been established by the EPA. The TLV established by the ACGIH is 200 $\mu g/m^3$.[112] In the absence of other guidelines, the method of analysis of selected should have the capability of measuring concentrations of selenium at this level.

Of the potential methods described in the literature we chose the method of Tabor et al.[95] because it seemed most nearly to meet the present need. It has good sensitivity and selectivity. The basis for the method has been well tested, and standard laboratory equipment can be used, which is not true of the atomic absorption, catalytic reduction, or flame emission spectrometry method.

F. Mercury

Information on mercury analysis from various sources was evaluated, and a method using flameless atomic absorption spectroscopy was selected. The basic method for mercury, which was described by Hatch and Ott,[113] entails converting the mercury to the elemental state and passing the vapor through a quartz absorption cell of an atomic absorption spectrophotometer where the mercury vapor concentration is measured. The method has adequate sensitivity for most purposes. The major problems with methods of this type are caused by interferences in the sampling procedure, losses and contamination during sample workup, and interference in the measurement step by other materials that absorb at the 2537 Å resonance line of mercury.

The EPA has established an emission standard for stationary emission sources of mercury of 2300 g (5 pounds) per 24-hour period.[114] The sensitivity of the method of analysis will depend on the concentration of mercury in the source emission. Slight modifications may be required, depending on the emission level of the source.

The determination of mercury in stack gases from nonferrous smelters represents the most difficult circumstance encountered in source measurement. The high level of SO_2 in these gases causes serious interference in sampling procedures. Iodine monochloride (ICl) in Greenburg-Smith impingers has been used to collect the mercury from the gas stream in the existing EPA methods of analysis, and this method of collection is specified in the EPA standards. Unfortunately, ICl also reacts with SO_2 with the result that excessive amounts of SO_2 destroy all the ICl, and the mercury vapor is not collected quantitatively. Thus, it was necessary to modify the approach to the sampling and analysis for mercury in gases containing high levels of SO_2, if such a method were to have general applicability to source measurement.

In the development of a method of analysis for mercury in high SO_2 stack gases, simplicity in sampling and measurement are important. We therefore considered the possibility of solid, one-stage scrubbers for the selective and quantitative collection of mercury. Ideally, this solid scrubber should be sufficiently selective in the collection of mercury that it could also be used as the input to a mercury vapor analyzer. For this purpose it is desirable to have a collection medium that can also release mercury vapor rapidly and quantitatively when subjected to a suitable treatment in the mercury measuring apparatus. With these considerations in mind, we evaluated thermodynamic data for a number of possible reactions of mercury, SO_2, CO, and CO_2 with possible solid scrubber substrates. Some of these reactions and their free energy values (ΔF^{o} 298) are given in Table 2. No scrubber substrates were found that quantitatively collected mercury, and rapidly and quantitatively released it upon appropriate treatment without interference from SO_2. Other solid scrubber substrates should also be examined.

Table 2

FREE ENERGY VALUES FOR VARIOUS REACTIONS

Reaction		ΔF^0 298 (kcal)
$Hg\ (g) + \frac{1}{2}O_2\ (g)$	$\rightarrow HgO\ (s)$	-21.6
$HgO\ (s) + SO_2\ (g)$	$\rightarrow Hg\ (g) + SO_3\ (g)$	+ 3.9
$HgO\ (s) + CO\ (g)$	$\rightarrow Hg\ (g) + CO_2\ (g)$	-39.9
$Ag_2O\ (s) + Hg\ (g)$	$\rightarrow HgO\ (s) + 2Ag\ (s)$	-19.0
$Ag_2O\ (s) + SO_2\ (g)$	$\rightarrow SO_3\ (g) + 2Ag\ (s)$	-14.1
$Ag_2O\ (s) + CO\ (g)$	$\rightarrow CO_2\ (g) + 2Ag\ (s)$	-58.9
$2Ag_2O\ (s) + SO_2\ (g)$	$\rightarrow Ag_2SO_4\ (s) + 2Ag\ (s)$	-70.2
$Ag_2O\ (s) + CO_2\ (g)$	$\rightarrow Ag_2CO_3\ (s)$	- 7.6
$Co_3O_4\ (s) + Hg\ (g)$	$\rightarrow 3CoO\ (s) + HgO\ (s)$	+10.4
$Co_3O_4\ (s) + SO_2\ (g)$	$\rightarrow SO_3\ (g) + 3CoO\ (s)$	+15.3
$Co_3O_4\ (s) + SO_2\ (g)$	$\rightarrow CoSO_4\ (s)\ 2CoO\ (s)$	-28.7
$Co_3O_4\ (s) + CO\ (g)$	$\rightarrow 3CoO\ (s) + CO_2\ (g)$	-29.5
$Co_3O_4\ (s) + CO\ (g)$	$\rightarrow CoCO_3\ (g) + 3CoO\ (s)$	-41.8
$CoO\ (s) + CO_2\ (g)$	$\rightarrow CoCO_3\ (s)$	-12.3
$BaO_2\ (s) + Hg\ (g)$	$\rightarrow BaO\ (s) + HgO\ (s)$	-12.1
$BaO_2\ (s) + SO_2\ (g)$	$\rightarrow BaSO_4\ (s)$	-115.8
$BaO\ (s) + SO_2\ (g)$	$\rightarrow BaSO_3\ (s)$	-64.3
$BaO_2\ (s) + CO\ (g)$	$\rightarrow BaCO_3\ (s)$	-103.6
$BaO\ (s) + CO_2\ (g)$	$\rightarrow BaCO_3\ (s)$	-51.6

On the basis of the data summarized in Table 2, it should be possible to remove SO_2 from a gas stream and to allow Hg to pass through a column of Co_3O_4 at a temperature of approximately 100 to 200°C. With a packing of Ag_2O, however, both Hg and SO_2 would be collected in the Ag_2O packing. The great stabilities of $BaSO_4$ and $BaSO_3$ would also make it appear feasible to remove sulfur compounds from a gas stream with a BaO_2 solid scrubber without removing any of the Hg at temperatures of 400-500°C.

Before attempting to devise a method of analysis for mercury in stationary sources, we carried out a limited amount of experimental laboratory work to develop a method of dealing with mercury in emissions containing high levels of SO_2.

Materials tested for use in the scrubber were powdered PbO_2, BaO_2, and Ag_2O. Co_3O_4 was not tested. The other materials were tested at various temperatures to determine their efficiency as SO_2 trapping agents by introducing vapors through a septum into a N_2 flow stream (1 liter/min) that passed through 5 cm of packing in a glass tube (16 mm o.d.). The gases from the packing were directed into a detection cell on an atomic absorption spectrometer. The 2830 Å line from a Pb hollow cathode tube was used to detect SO_2 gas passing through the system, since SO_2 absorbs strongly at this wavelength and the Pb hollow cathode tube was a convenient source. The transmitted SO_2 was evidenced by a sharp peak on a strip recorder. The peak heights were used as a measure of the quantity of gas coming through the trap, with the value obtained from the gas coming through

an unpacked tube representing 100%. The results of these tests are given in Table 3.

Table 3

SO_2 REMOVAL AT VARIOUS TEMPERATURES
(Peak Heights - mm)

	PbO_2	BaO_2	Ag_2O
No packing, 25°C	97	73	96
Packing, 25°C	61	51	27
Packing, 100°C	58	46	0
Packing, 200°C	38	34	0
Packing, 400°C	0	0	--

Table 4 presents the results from a similar test on packing materials, using mercury vapor instead of SO_2 gas. In this test a mercury vapor discharge lamp was used to detect the mercury coming through the trap. The difficulty in maintaining a standard quantity of mercury in the vapor over liquid mercury, even with agitation, is indicated by the variation found when no packing was used. The average of the three blanks was 137 mm.

Table 4

Hg REMOVAL AT VARIOUS TEMPERATURES
(Peak Heights - mm)

	PbO_2	BaO_2	Ag_2O
No packing, 25°C	137	127	148
Packing, 25°C	10	124	0
Packing, 100°C	25	121	0
Packing, 200°C	47	143	0
Packing, 300°C	68	--	Hg comes off slowly at > 230°C
Packing, 400°C		140	--

Both sets of results show that Ag_2O readily absorbs SO_2 and mercury. The release of the mercury from the packing at 230°C indicates that this agent could be used in mercury vapor detection. Since BaO_2 absorbs SO_2 but not mercury, BaO_2 could be used in a solid scrubber to remove SO_2 without absorbing any of the mercury vapor. The mercury vapor could then be collected in ICl solution. Laboratory tests were then carried out using a Staksamplr® to draw laboratory air spiked with mercury through a BaO_2 solid scrubber for SO_2 and into ICl solutions in the impingers. The BaO_2 was supported on granular aluminum silicate that was synthesized in our laboratory. It was found that SO_2 was quantitatively removed and mercury was quantitatively passed by the scrubber.

The column packing was prepared by mixing 100 grams of BaO_2 with 70 g of aluminum silicate (40-60 mesh) and heating the mixture for 1 hour at 420°C. The hot mixture was sieved through a 25-mesh sieve. Then an additional 100 g of BaO_2 was mixed with the sieved product. The resulting mixture was heated 1 hour at 420°C, broken up, and hot sieved. The 25- to 65-mesh fraction was used to pack the SO_2 scrubber.

Approximately 170 g of the resulting BaO_2 aluminum silicate was packed into a 3.17 cm o.d. x 30.5 cm Pyrex tube equipped on each end with fittings suitable for connecting it to the Staksamplr® located just in front of the impingers. The BaO_2 tube was held at 420°C in a 3.50 cm i.d. tube furnace. The horizontal mounting of the tube furnace resulted in some channeling along the top of the packing and a considerable loss in efficiency for removing SO_2 from the gas stream. Consequently, SO_2 broke through long before the total capacity of the scrubber was used up. This problem could probably be avoided by mounting the scrubber vertically.

In laboratory tests with an air stream containing approximately 5% SO_2, it was demonstrated that SO_2 could be reduced to such a low level that mercury vapor sampling could be done satisfactorily by the ICl method. It was demonstrated that mercury vapor passed through the BaO_2 scrubber. This scrubber was tested in one series of field tests.

The field tests were carried out in conjunction with EPA personnel at a zinc smelter on May 23 and 24, 1972. The purpose of these tests was to determine whether use of the BaO_2 scrubber concept in the manual ICl method is, under field conditions, practical for analyzing mercury emissions in stack gases. In this case the SO_2 concentration was approximately 7%. A variety of conditions were used in the sampling train because this was a methods research task and it was not intended to be used to establish firm data for mercury levels. Our main objective was to establish a basis for using a solid scrubber to remove SO_2 from a stack gas sample before the sample passed through the ICl scrubbers. This objective was realized. Additionally, we were able to obtain some data on mercury levels. The results of these tests are summarized in Table 5.

Table 5

MERCURY CONTENT OF SMELTER FLUE GAS

Test No.	Date	Volume of Gas (m^3)	Stack Temperature (^0F)	Mercury Content ($\mu g/m^3$)		
				Gaseous	Particulate	Total
I	5/23/72	0.084	455	23.3	10.2	33.6
II	5/23/72	0.135	455	15.5	17.3	32.8
III	5/24/72	0.104	500	15.9	43.8	59.6

In Table 5 the particulate mercury levels are based on the mercury content of the ICl washings of the probe, filter, and cyclone. The gaseous mercury levels are based on the amount collected in the ICl solutions in the impingers. The fact that stack temperature was slightly higher than BaO_2 scrubber temperature did not create a problem because the mercury vapor concentrations were well below saturation so that condensation did not occur as the gas cooled before entering the scrubber.

Although BaO_2 decomposes in hot water it is expected that not enough water vapor will be present to cause a problem at the temperatures used. The softening of BaO_2 at approximately 450°C did not adversely affect the scrubber, except for shrinkage of the packing and resultant channeling. Temperatures of at least 400°C are needed for quantitative removal of SO_2. The softening of BaO_2 does in fact seem to facilitate the removal of SO_2.

Test II proved to be the most satisfactory of the three tests. Tests I and III were interrupted several times for adjustments. Although the successful use of BaO_2 as a solid scrubber for eliminating the SO_2 interference in collecting mercury vapor in flue gases was demonstrated, further development is needed on several aspects of the system used in these tests. The experimental setup was crude and will require considerable improvement before the method can be used routinely in field sampling for mercury vapor. The BaO_2 scrubber heated up considerably during the field tests, and it will be necessary to design the apparatus so that this exothermic reaction does not result in malfunction of the scrubber before BaO_2 can be used successfully to remove SO_2 from the gas stream in mercury vapor sampling.

A BaO_2 scrubber is included in the procedure selected for mercury analysis (see Appendix 2). We have also included a pyrolysis tube and omitted the filter from the method so that particulate mercury is converted to vapor and total mercury is measured as mercury vapor.

RESULTS OF LABORATORY AND FIELD TESTING

During Phase II of this study, laboratory and field tests were performed on the methods of analysis selected in Phase I. Testing in the case of asbestos and mercury is incomplete, and further development of these methods may be needed before they are ready for use in measuring source emissions.

A. Asbestos

Laboratory tests were conducted during Phase I.on the method of preparing samples for the electron microscope. The existing methods for preparing samples were inadequate and needed further development before they could be incorporated into a method of analysis for asbestos. After several telephone conversations with people active in this field, we were able to get satisfactory results in the laboratory. The procedure that was finally developed and that is presented in Appendix 2 is based on the work of Frank et al.[12] with modifications suggested by Murchio.[13]

Field samples were collected at an asbestos mill. Samples were taken at two locations at the mill. Five samples were taken at the exhaust of a bag house, shown in Figure 1, and one sample was taken of the ambient air about 1.5 meters above the ground between two buildings.

The first two samples were taken to get an idea of what the loading would be for various sample sizes. It was then determined that samples of 0.01, 0.1, and 1.0 ft^3 (0.28, 2.8 and 28 liters) should be taken to get the desired asbestos loading. These three samples were taken using a 1-inch (2.54-cm) Nuclepore® filter and a probe equipped with a 0.25-inch (0.63-cm) i.d. nozzle. The samples were all taken from the point indicated in Figure 1)

One sample was taken of 1.2 ft^3 (34 liters) of the ambient air about 1.5 meters above ground level. It was collected on a 1-inch (2.54-cm) Nuclepore ®

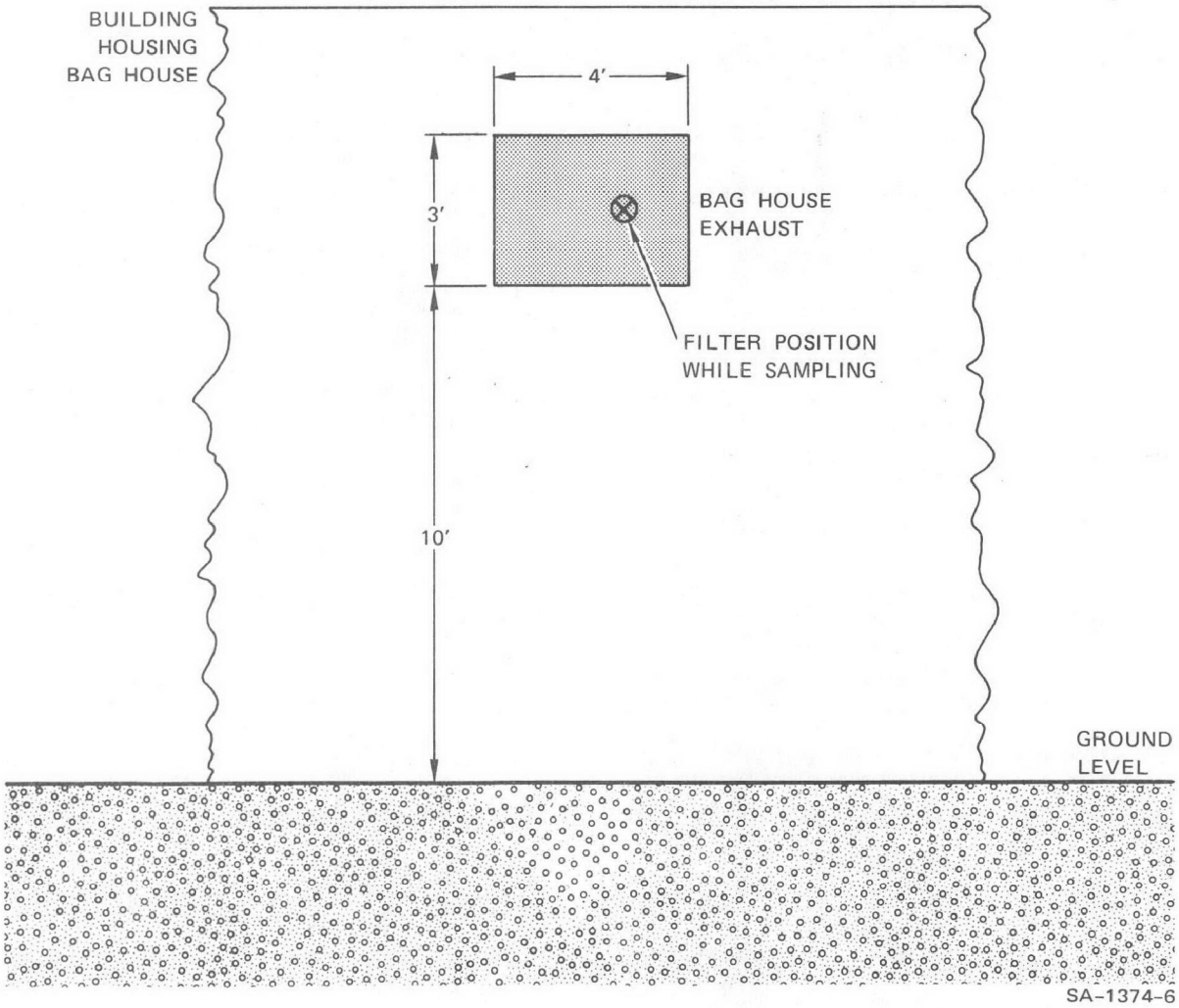

FIGURE 1 ASBESTOS SAMPLING LOCATION AT BAG HOUSE EXHAUST
[FLOW ≅ 40,000 cfm (18.9 m^3/sec)]

filter in a holder with a 1-inch (2.54-cm) opening.

Figure 2 is a photomicrograph of a typical grid opening for the 0.1-ft^3 (2.8-liter) sample taken from the bag house exhaust and corresponds to grid opening number 2 in Table 6. The fine structure in the background of the photomicrograph is caused by filter fragments. One of the difficulties with this method is the incompleteness of the dissolution of the filter. An independent method of sample collection and processing gave evidence that many of the smaller particles were lost.

Counts were made of the fibrous asbestos particles in Figure 2 and in other grid openings from the bag house exhaust and ambient air samples. The results are listed in Table 6. The number of asbestos particles per electron microscopic field were determined for these two samples from the data in Table 6. The bag house exhaust sample contained approximately 7 asbestos particles per field (average 47 particles/grid opening, 7 fields/grid opening). The ambient air sample contained approximately 12 asbestos particles per field (85 particles/grid opening). It was determined from these data and from electronmicrographs of the samples that 5 to 50 particles per field in all size categories would be a reasonable amount of asbestos to collect. The total number of asbestos particles to be collected on a filter with a 20-mm effective diameter was calculated to be in the range of 630,000 to 6,300,000 (field $\sim 50\ \mu$ on a side). The range of the method of analysis for asbestos in Appendix 2 is based on this number of particles per sample. The concentrations of the sources were also calculated. The concentrations in the bag house exhaust sample and ambient air samples were 9 million and 1 million fibers per cubic foot (3.2×10^5 and 3.5×10^4 fibers per liter), respectively. This represents all particle size categories.

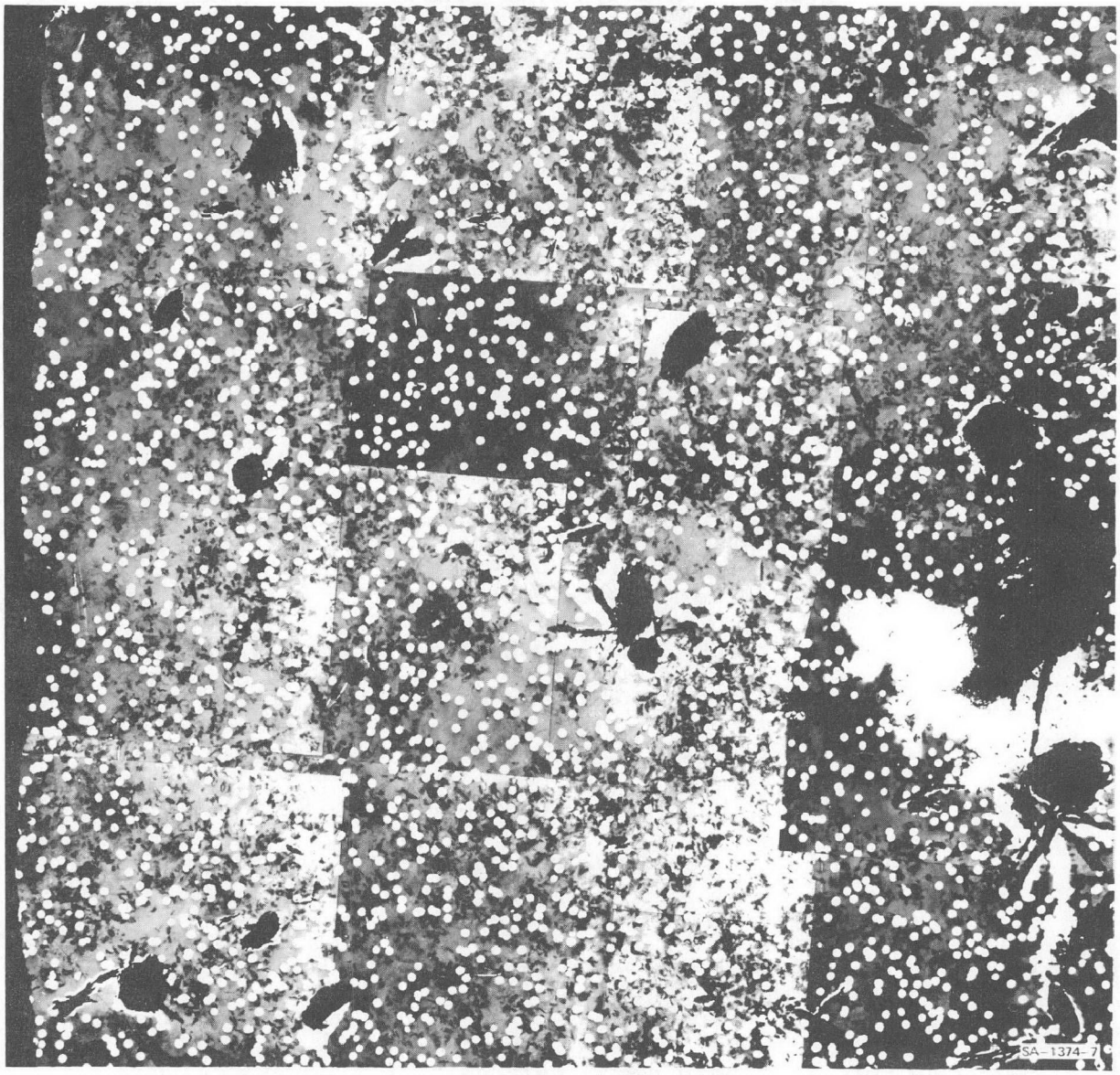

FIGURE 2 PHOTOMICROGRAPH OF ASBESTOS PARTICLES

Table 6

COUNTS OF ASBESTOS PARTICLES IN
SAMPLES COLLECTED AT ASBESTOS MILL

Particle Size	Bag House Exhaust					Ambient Air
	Grid 1	Grid 2	Grid 3	Grid 4	Grid 5	Grid 1
> 10 μ long						
Aspect ratio >3	8	4	10	6	8	9
Aspect ratio <3	11	17	17	11	11	31
5-10 μ long						
Aspect ratio >3	7	6	4	6	5	12
Aspect ratio <3	5	6	10	10	11	15
2-5 μ long						
Aspect ratio >3	4	5	5	4	5	12
Aspect ratio <3	6	9	5	5	6	7
0.5-2 μ long						
Aspect ratio >3	0	0	0	0	0	0
Aspect ratio <3	1	0	1	1	6	1

The electron microscopic method of analysis for asbestos has a major advantage over optical methods currently being used in that it is possible to positively identify fibrous asbestos material by direct observation with the electron microscope. The fibrous tubes of chrysotile asbestos can be clearly seen. For absolute identification electron diffraction should be used for each particle. With the optica method, however, the fibrous tubes are not discernible and aspect ratios must be used to determine whether a particle is fibrous. If an observed particle has an aspect ratio greater than 3 (length/width) it is considered asbestos. It can be seen in Table 6 that about half of the asbestos particles counted have aspect ratios less than 3. These asbestos particles with aspect ratios less than 3 are bundles of asbestos fibers as can be seen in Figure 2. Thus, the optical method of analysis of asbestos should give low results.

For standardization of the method, samples should be taken of an atmosphere or a gas stream of known concentration, and then the amount of asbestos collected and the volume of the sample taken checked against the known source concentration. In some cases nonisokinetic samples must be taken (such as from ore piles, tailings, dumps, and roads), and the accuracy of this method of sampling asbestos should be tested along with isokinetic sampling methods.

Sampling probes should present the filter directly to the source, avoiding nozzles that present an asbestos retention problem. If the diameter of the nozzle is smaller than the area of the filter, it may cause an uneven distribution of asbestos because of expansion just before the filter.

B. Beryllium

Laboratory tests were conducted on the method of analysis selected for beryllium. The method was tested in the 0-5 and 0-0.5 μg Be/ml ranges using standard and spiked samples. A standard consists of an aliquot of a solution of known beryllium concentration. A spiked sample consists of a filter and impinger acid solutions to which an aliquot of a solution of known beryllium concentration has been added. The results are shown in Table 7.

A standard curve was drawn and sample concentrations were determined. We then calculated the average relative deviation of these sample concentrations (determined from the standard curve) from the true value. This is defined as the accuracy of the analytical method. For the 0.5-5 μg Be/ml range, the accuracy was $\pm$ 6%. Below 0.5 μg Be/ml, the accuracy was $\pm$ 20%. The 0.5-5 μg Be/ml range corresponds to a source containing 0.03-0.30 $\mu g/ft^3$ (1-10 $\mu g/m^3$) for a sample of 100 ft^3 (3 m^3). The average relative deviation from the mean was calculated using the same values obtained from the standard curve. This is defined as the precision of the analytical method. The precision of 0.5-5 μg Be/ml range was $\pm$ 4%; below 0.5 μg Be/ml, it was $\pm$ 11%.

Table 7

LABORATORY MEASUREMENTS OF BERYLLIUM SAMPLES

Concentration (μg Be/ml)	Atomic Absorption Reading	
	Standard	Sample (Spiked)
0.05	0.036	0.033
		0.033
0.10	0.054	0.025
		0.043
0.20	0.092	0.087
		0.077
0.50	0.260	0.218
	0.219	0.211
		0.169
		0.227

	Absorbance (Optical Density)	
	Standard	Sample (Spiked)
0.5	0.050	0.051
	0.058	0.054
		0.043
		0.047
1.0	0.099	0.094
		0.097
2.0	0.195	0.188
5.0	0.453	0.458

The method of masking interferants with K^+ was tested. A solution with 5.0 μg Be^{2+}/ml and 10,000 μg K^+/ml was prepared.

Another solution was prepared containing 4,000 μg/ml each of Pb^{2+}, Cd^{2+}, Se^{4+}, and Hg^{2+} as interferants, plus 10,000 μg K^+/ml and 5.0 μg Be^{2+}/ml. These cations were all added as sulfate, chloride, or nitrate, salts, except for Be^{2+}, which was prepared from a commercial standard, of unknown anion content. During the attempt to measure the beryllium concentration on the atomic absorption spectrophotometer, the aspirator clogged and no reliable readings were obtained. Precipitates were noted in both solutions. The precipitate in the K^+ and Be^{2+} solution was probably $KClO_4$, caused by not completely evaporating to dryness the $HClO_4$ and H_2SO_4 that were added to oxidize Be. In the other solution, the precipitate was either $KClO_4$ or $PbSO_4$ or a combination of the two. This phase of the beryllium method should be retested.

Field sampling for beryllium was conducted at a beryllium machining facility. One sample was taken from each of two locations atop the roof of the building containing a beryllium machine shop. Sampling data and calculations are presented in Section F of this report.

The first sample was taken from a stack that exhausts into the atmosphere. The stack and the system it is part of is shown in Figure 3. This stack meets the EPA criteria for a suitable site.[115] The stack was traversed along one diameter only, since the diameter at 90° would have created a problem of supporting the impinger box and probe. Two traversing points were used.

A hexane trap in an acetone/dry ice bath was used in place of the silica gel trap described in the SRI Method of Analysis #2 in Appendix 2. There has been some evidence of the existence of volatile beryllium compounds, and this trap was used to verify that all the beryllium was caught in the filter and impingers.[116]

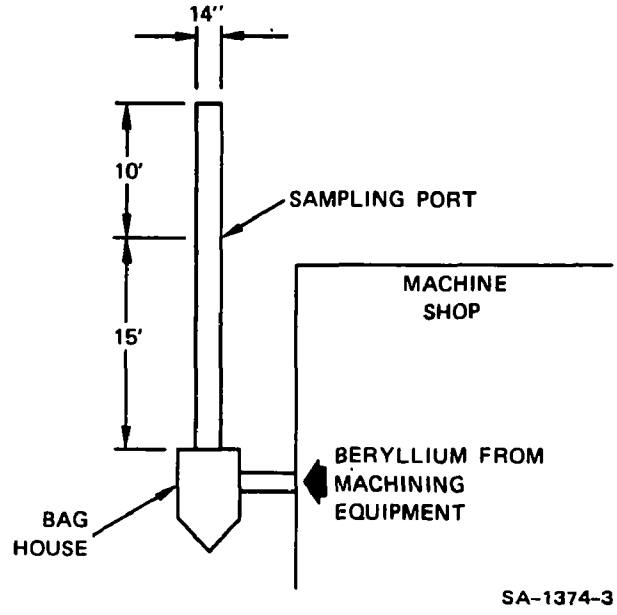

FIGURE 3 FIRST BERYLLIUM SAMPLING LOCATION

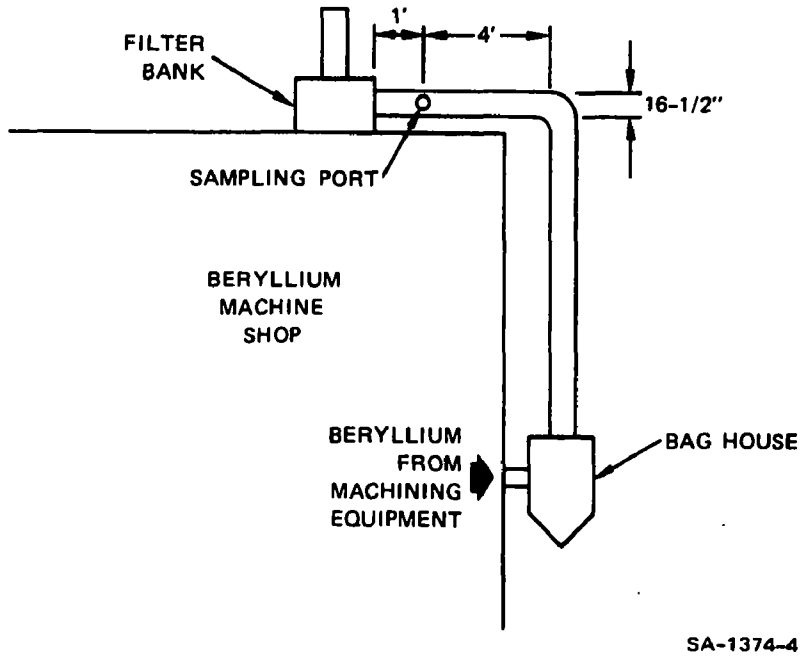

FIGURE 4 SECOND BERYLLIUM SAMPLING LOCATION

Since little beryllium was found in the first sampling location, another location was tried that was expected to have more beryllium. This second sampling site is shown in Figure 4.

The second sample (Be #2) was collected with the conventional sampling train described in SRI Method of Analysis #2. The hexane impinger was not used because of ice clogging problems experienced with it in Be #1. No traversing of the duct was performed because the positive pressure in the duct would have presented a health hazard to the personnel moving the probe. The nozzle was placed in the center of the duct. The sampling port could not be easily placed at a point that would meet the EPA criteria of sample port location,[115] so the location in Figure 4 was chosen.

The amounts of Be collected at both locations were less than 1 μg, as shown in Table 8.

Table 8

MEASUREMENTS OF BERYLLIUM FIELD SAMPLES

Sample	Total Be Collected (μg)	Sampling Time (hr)
Be #1 (minus hexane) impinger	0.18	3
Be #1 (hexane impinger)	0	3
Be #2	0.22	4

The concentration of the solutions prepared from the samples taken (~0.02 μg/ml for both nonhexane samples) were below the lowest standard

(0.05 μg/ml). However, this concentration of Be is measurable since it is an order of magnitude above the detection limit of the atomic absorbtion spectrophotometer (0.002 μg/ml).

Although no beryllium was detected in the hexane impinger of Be #1, this does not conclusively demonstrate the efficiency of the filter and acid impingers because the levels of beryllium were so low. No attempt was made to evaluate the efficiency of individual parts of the sampling train because of the small amounts of beryllium collected.

More detailed data on the two samples described above, along with the calculations used to arrive at the figures presented, can be found in Section IV F.

C. Lead and Cadmium

Since these two pollutants were field tested at the same site they will be discussed together, following the laboratory test results.

During laboratory tests on lead it was found that the absorbances of the standards (an aliquot of known beryllium concentration) and the spiked samples (a filter, acid impinger solutions, and a known amount of beryllium) had different slopes when plotted on a graph. The data obtained is presented in the following tabulation.

Concentration (μg Pb/ml	Absorbance Standards	Samples (Spiked)
1	0.005	-
5	0.027	-
6	-	0.037
10	0.058	-
20	-	0.093
30	0.174	-
50	0.284	0.190

The slope of the standards curve is calculated to be 0.0057 optical density units/μg Pb/ml. The data for the spiked samples yields a slope of 0.0038 optical density units/μg Pb/ml. The EPA project officer suggested that these differences between standards and spiked filter samples might be caused by matrix effects resulting from different nitric acid concentrations.

A second test of this method was conducted. In this test, standards and spiked filter samples were prepared using the same procedure for both so that they contained the same concentration of nitric acid. The results of that test are shown below.

Concentration (μg Pb/ml)	Absorbance	
	Standards	Samples (Spiked)
5	0.033	0.030
10	0.065	-
15	0.097	0.095
20	0.125	-

The data from these standards and spiked samples correlate well. The analytical method was appropriately changed so that standards and samples are prepared in a similar manner.

The opportunity to use the lead analytical method for the analysis of several urban air samples arose during this reporting period. Although this method was not specifically designed for this type of sample, the project team felt that it could be successfully applied. The Atmospheric Sciences Laboratory at SRI provided the samples and funds for this analysis.

The samples were collected on glass fiber filters similar to those used to collect particulate in most of the methods in this project. The filters were analyzed by means of the analytical method developed for lead, except that no impinger solutions were used. The filters were low-temperature ashed and then extracted with dilute nitric acid. The extract was concentrated, diluted to the mark in a 10-ml volumetric flask, and then analyzed.

Both normal and scale expanded atomic absorption measurements were used to analyze the samples. The data obtained are presented in Table 9. The correlation between the amount of particulate on the five filters with the heaviest particulate accumulation and the amount of lead detected was noted.

In the analytical method for cadmium it was noted that the concentrations of the standards were low by a factor of ten. Appropriate changes were made in the procedure to correct the concentrations.

The volume of solution into which the sample is taken for analysis by atomic absorption spectroscopy was increased from 5 ml to 10 ml so that more than one analysis could be made of the sample, if necessary.

After these changes were made, the analytical method was laboratory tested. The results are presented below.

Concentration (μg Cd/ml)	Absorbance	
	Standard	Sample (Spiked)
0.5	0.044	0.046
1.0	0.083	0.083
1.5	0.116	-
2.0	0.152	0.150

The field tests for lead and cadmium were conducted at a municipal incinerator in Dade County, Florida. The sampling location, as shown in Figure 5, was near the exit of the stack used to emit combustion products to the atmosphere.

Four samples were taken: two 2-hour samples and two 4-hour samples. Only half the diameter was traversed since only a 1.5-meter probe was available. Six traverse points were located on a diameter. The ports facing south and east were sampled during Pb-Cd #1. During the rest of the sampling (Pb-Cd #2-4), only the south port was sampled. Access was limited to other ports because another sampling team was on the stack. Sampling data and calculations are presented in Section F of this report.

Table 9

LABORATORY MEASUREMENTS OF LEAD SAMPLES

Sample	Percent Absorption (x 5)	Absorbance (O.D.)	Concentration (μg Pb/ml) of 1/2 filter in 10 ml	μg Pb in Whole Filter*	Weight of Particulate on Filter (μg)
Water blank	0.000				
1.0 μg Pb/ml standard	0.056				
2.5 μg Pb/ml standard	0.132				
5.0 μg Pb/ml standard	0.268				
1A	0.031				
1B	0.012		0.58	10.6	1198
2B	0.061		0.22	4.4	1463
1D	0.152		1.14	22.8	1500
2C	0.253		2.83	56.6	3973
2D	0.049		4.71	94.2	4068
2E	0.030		0.91	18.2	886
2F (blank filter)	0.009		0.56	11.2	413
Water blank		0.002			
5.0 μg Pb/ml standard		0.024			
10.0 μg Pb/ml standard		0.046			
15.0 μg Pb/ml standard		0.067			
20.0 μg Pb/ml standard		0.090	7.3	146	5599
2A		0.034	9.1	182	8041
1C	0.042				

*Obtained by multiplying previous column by 20.

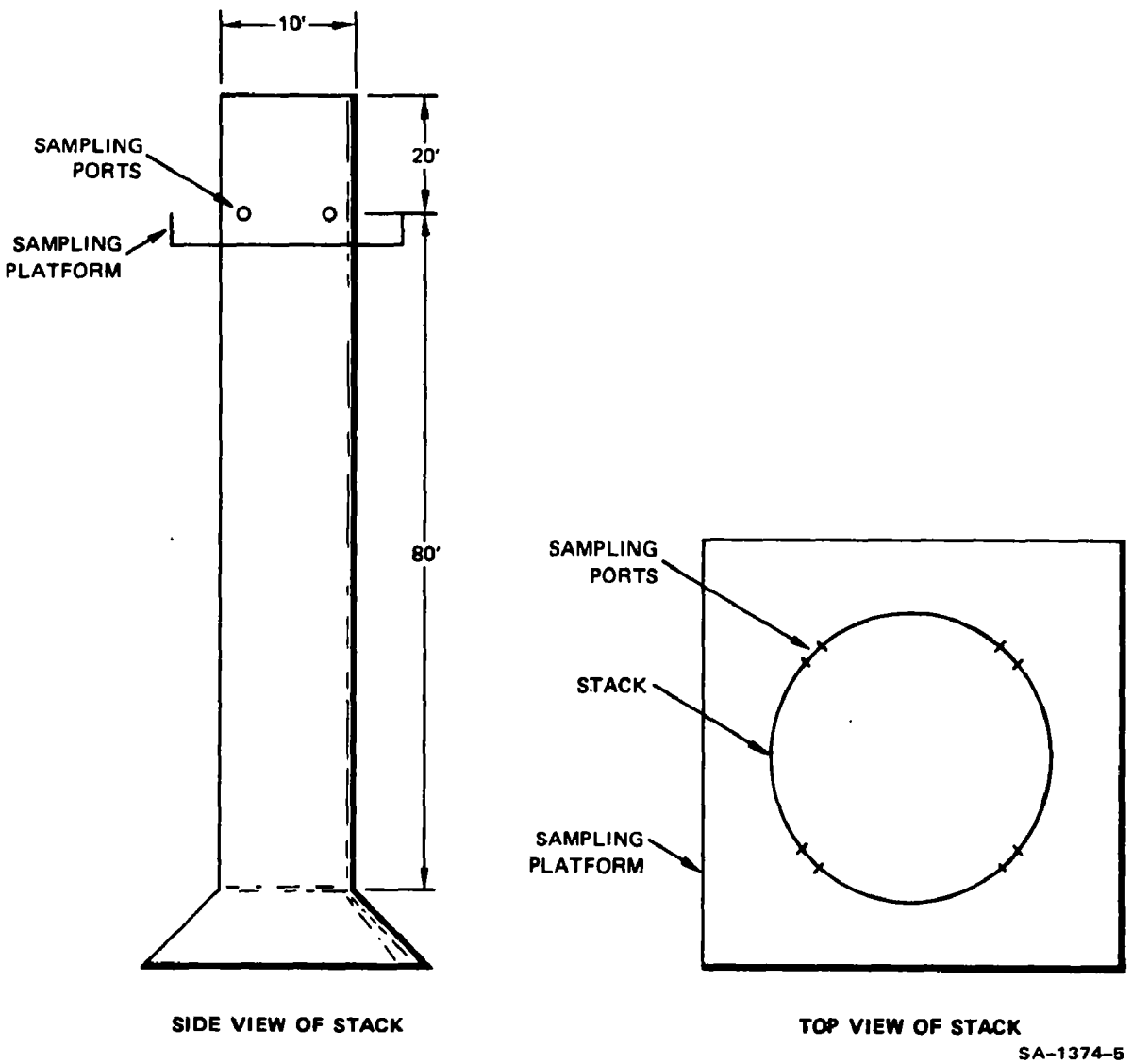

FIGURE 5 LEAD AND CADMIUM SAMPLING SITE

The sampling train was divided into four components: (1) the probe and cyclone; (2) the filter; (3) the first impinger; and (4) the second and third impingers. Each component was analyzed for both lead and cadmium. The results of these analyses are presented in Table 10.

Table 10

MEASUREMENTS OF LEAD AND CADMIUM FIELD SAMPLES

	Sampling Train Component			
Sample	Probe and Cyclone (μg)	Filter (μg)	1st Impinger (μg)	2nd & 3rd Impingers (μg)
Pb #1	2145	1709	51	0
Pb #2	1525	2629	1	2
Pb #3	1405	3499	37	6
Pb #4	2545	1419	5	7
Cd #1	59	59	9	0
Cd #2	52	59	0	0
Cd #3	90	137	1	1
Cd #4	90	120	0	0

In all cases, except for in Cd #1, 99% or more of the lead or cadmium collected was found in the probe, cyclone, and filter. This indicates that the lead and cadmium were in a particulate form and that no significant volatile lead or cadmium compounds were present. If one were certain that the lead or cadmium in a source of interest is in particulate form, this analytical method could be used without the acid impingers. No correlations can be made between the amounts of lead and cadmium found in the four samples, since the conditions under which the incineration took place may have changed from sample to sample and the amount of lead and

cadmium in the garbage may also have varied.

Some contribution to the amounts of lead and cadmium found may have come from the refractory material on the inside wall of the stack. A portion of this material was analyzed and was found to contain about 5 μg Pb/mg of refractory material and 0.1 μg Cd/mg of refractory material. This lead and cadmium may be from the refractory itself, or it may be due to contamination.

The methods of analysis for lead and cadmium seem to have worked well, and more than enough lead and cadmium were collected from this particular source to be analyzed. The solutions made up from the material collected in the probe and cyclone and that collected on the filter had to be diluted tenfold for analysis. The accuracy and precision of the analytical method for lead in the 5-20 μg/ml range were calculated to be ±3% and ±2%, respectively, and below 5 μg/ml, ±4% and ±3%, respectively. The 5-20 μg Pb/ml range corresponds to 0.6-2 $\mu g/ft^3$ (20-70 $\mu g/m^3$) for a 100 ft^3 (3 m^3) sample. The accuracy and precision of the analytical method for cadmium are ±3% and ±3%, respectively, for the 0.5 to 2.0 μg/ml range and ±4% and ±3%, respectively, for concentrations below 0.5 μg/ml. Not enough data were collected to determine the accuracy or precision of the total method including sampling. The 0.5 to 2 μg/ml range corresponds to a 100 ft^3 (3 m^3) sample taken from an emission source containing 0.05 to 0.2 $\mu g/ft^3$ (2 to 7 $\mu g/m^3$).

D. Selenium

Several problems were encountered in laboratory tests of the selenium analytical method. It was found that the wavelength at which the absorbance of 4,5-benzopiazselenol (the reaction product of 2,3-diaminonaphthalene and Se (IV)) is to be measured was reported incorrectly in the literature at 390 nm. The absorbance maximum was experimentally found to be at 380 nm. This can be seen in Table 11.

Table 11

ABSORBANCE SPECTRUM OF A SOLUTION OF 4,5-BENZOPIAZSELENOL IN TOLUENE

Wavelength (nm)	Optical Density
370	0.65
375	0.57
380	1.10
385	0.51
390	0.12
395	0.04

An interference filter was used to check the accuracy of the spectrophotometer. A filter with a maximum transmission at 381.4 nm gave a maximum transmission at 382.2 nm on the spectrophotometer.

Measurements of standard and spiked filter samples were made at 380 nm and are presented in Table 12.

Table 12

LABORATORY MEASUREMENTS OF SELENIUM

Concentration (μg Se/50 ml toluene)	Absorbances Standard	Sample
10	0.15	-
20	-	0.19
50	0.29	-
100	0.49	0.64
150	0.83	0.91
200	1.10	-

The accuracy and precision calculated for the analytical method alone are ±14% and ±9%, respectively, for 20-200 μg Se/50 ml toluene. The 20-200 μg Se/ml toluene range corresponds to sampling 100 ft^3 (3 m^3) of an emission source with a concentration in its stack gases of 0.2-2 $\mu g/ft^3$ (7-70 $\mu g/m^3$).

No field sampling of the method of analysis for selenium was conducted because of a change in the scope of work, which no longer required field testing for selenium.

E. Mercury

Much of the method of analysis for mercury in Appendix 2 was newly formulated during this study. The laboratory and field testing was performed in Phase I in support of this development. It was therefore discussed earlier in Section III F of this report.

The collection system, including the BaO_2 scrubber, has been proved in use for small samples. Development of a BaO_2 scrubber that will handle larger samples containing SO_2 is needed. Also, testing of the collection system with the pyrolysis tube is needed.

The analytical method was tested successfully and has an accuracy of ±3% where the total amount of collected mercury is in the range of 45-665 ng. This accuracy is based on the analysis of Hg standards. Insufficient data were collected to establish the precision. Analytical method or the accuracy and precision of the total method including sampling.

F. Data and Calculations for Lead, Cadmium, and Beryllium Field Samples

The sampling data obtained for lead, cadmium, and beryllium are given in Table 13. This is followed by an explanation of the isokinetic sampling calculations used to derive these data and the definitions of the terms used in the calculations.

Table 13

LEAD, CADMIUM, AND BERYLLIUM SAMPLING DATA

	Pb-Cd No. 1	Pb-Cd No. 2	Pb-Cd No. 3	Pb-Cd No. 4	Be No. 1	Be No. 2
	6/11/73	6/12/73	6/13/73	6/14/73	9/19/73	9/21/73
$\Delta\bar{H}$	0.95	1.11	0.99	1.00	3.6	2.6
$\bar{T}m$ °F	86.6	90.4	93.8	102	105	110
$\bar{T}m$ °R	546.6	550.4	553.8	562	565	570
Pb	30.00	30.05	30.26	30.28	30.05	30.20
Vm	64.252	66.397	130.22	132.977	179.643	208.982
Vm_{std}	62.562	64.334	126.24	127.209	70.96	197.28
Vw	231.7	253.2	396.8	474.5	25	49.6
Vw_{gas}	10.983	12.002	18.808	22.491	1.185	2.35
% M	14.93	15.722	12.967	15.024	0.69	1.18
Md	0.851	0.843	0.870	0.850	0.99	0.99
% CO_2	3	3	3	3	0	0
% O_2	17	17	17	17	20	20
% CO	0	0	0	0	0	0
MWd	29.16	29.16	29.16	29.16	28.8	28.8
MW	27.50	27.41	27.71	27.48	28.7	28.7
Ts °R	860	860	860	860	542	545
Cp	0.85	0.85	0.85	0.85	0.85	0.85
Ps	30.00	30.05	30.26	30.28	30.08	30.70
Vs	2675	3041	2836	2941	3025	2545
Qs	99744	112,460	109,007	110,502	3147	3733
Qa	189,607	215,520	201,016	208,429	3233	3779
Tt	120	120	240	240	180	240
D_n	0.25	0.25	0.25	0.25	0.25	0.25
%$\bar{I}$	108.4	98.8	100.0	99.4	94.4	95.6

ISOKINETIC SAMPLING CALCULATIONS

1. Volume of dry gas sampled at standard conditions, DSCF

$$V_{m_{std}} = \frac{17.7 \times V_m \left(P_b + \frac{P_m}{13.6}\right)}{(T_m + 460)}$$

2. Volume of water vapor at standard conditions, SCF

$$V_{w_{gas}} = 0.0474 \times V_w$$

3. Percent moisture in stack gas

$$\% M = \frac{100 \times V_{w_{gas}}}{V_{m_{std}} + V_{w_{gas}}}$$

4. Mole fraction of dry gas

$$M_d = \frac{100 - \% M}{100}$$

5. Molecular weight of dry stack gas

$$MW_d = \left(\%CO_2 \times \frac{44}{100}\right) + \left(\%O_2 \times \frac{32}{100}\right) + \left[(\%CO + \%N_2) \times \frac{28}{100}\right]$$

6. Molecular weight of wet stack gas

$$MW = MW_d \times M_d + 18\,(1 - M_d)$$

7. Stack gas velocity at stack conditions, fpm

$$V_s = 5128.8 \times C_p \times \sqrt{\Delta P_s \times (T_s + 400)} \left[\frac{1}{P_s \times MW}\right]^{1/2}$$

8. Stack gas volumetric flow rate at standard conditions, DSCFM

$$Q_s = \frac{0.123 \times V_s \times A_s \times M_d \times P_s}{(T_s + 400)}$$

9. Stack gas volumetric flow rate at stack conditions, ACFM

$$Q_a = \frac{0.05645 \times Q_s \ (T_s + 480)}{P_s \times M_d}$$

10. Percent isokinetic

$$\% \ I = \frac{1032 \times (T_s + 460) \times V_{m_{std}}}{V_s \times T_t \times P_s \times M_d \times (D_n)^2}$$

DEFINITION OF TERMS

Symbol	Unit	Description
ΔH	in. H_2O	Orifice meter differential pressure
ΔH	in. H_2O	Average orifice meter differential
$T_{m\ in}$	^oF	Temperature, gas meter, inlet
$T_{m\ out}$	^oF	Temperature, gas meter, outlet
n	number of sets of data	
$T_m\ ^oF$	^oF	Average gas meter temp., (^oF)
$T_m\ ^oR$	^oR	Average gas meter temp., ^oR
P_b	in. Hg	Barometric pressure, absolute
V_m	cu ft	Volume gas sampled at the meter
$V_{m\ std}$	cu ft	Volume gas sampled, STP
V_w	ml	Volume of water collected, total
$V_{w\ gas}$	ft^3	Volume of water converted to gas at STP
% M	%	% moisture by volume stack gas
M_d	dimensionless	Mole fraction, dry gas
% CO_2	%	% CO_2 stack gas, dry basis, by volume
% O_2	%	% O_2 stack gas, dry basis, by volume
% CO + % N_2	%	% CO + % N_2 gas, dry basis, by volume
% CO	%	% CO gas, dry basis, by volume
MW_d	dimensionless	Molecular weight, dry stack gas
MW	dimensionless	Molecular weight, actual stack gas
T_s	^oF	Stack temperature
ΔP	in. H_2O	Pitot tube differential pressure
C_p	dimensionless	Pitot tube coefficient
P_s	in. Hg	Stack pressure, absolute
V_s	ft/min	Stack gas velocity

DEFINITION OF TERMS

Symbol	Unit	Description
A_s	in.^{2}	Area of stack at sampling point
T_s ^oR	^oR	Average stack temperature, ^oR
Q_s	ft^3/min	Stack gas flow rate, STPD, DSCFM
Q_a	ft^3/min	Stack gas flow rate, stack cond.
T_t	minutes	Time of test
D_n	inches	Diameter of probe tip
%I	%	% Isokinetic

CONVERSION TABLE

From	To	Operation
inches	millimeters	25.4 (inches)
^oF	^oC	5/9 (^oF - 32)
^oF	^oR	^oF + 460
^oC	^oK	^oC + 273
ft^3	liters	28.3 (ft^3)
ft/min	cm/sec	0.508 (ft/min)

REFERENCES

1. P. Gross, University of South Carolina, private communication.

2. R. E. Lane, J. M. Barnes, S. A. Roach, S. Smith, C. G. Addingley, S. Holmes, R. Hunt, J. F. Knox, and E. King, "Hygiene Standards for Chrysotile Asbestos Dust," Ann. Occup. Hyg., Vol. 11, pp. 47-69 (Pergamon Press, London, 1968).

3. G.W.H. Schepers (Bureau of Laboratories, Department of Health, Washington, D.C.), Proceedings Conference Biological Effects Asbestos, Annals New York Academy of Science, pp. 121-123 (New York, 1965).

4. Y. Suzuki and J. Churz, Amer. J. Path. 55, 79 (1969).

5. P. F. Holt, J. Mills, and D. K. Young, Annals New York Academy of Science, pp. 87-97 (New York, 1965).

6. H. E. Ayer and J. R. Lynch, Proceedings International Symposium, British Occupational Hygiene Society, Cambridge, September 28-October 1, 1965, pp. 511-521 (Pergamon Press, London, 1967).

7. Federal Register, Vol. 38, No. 66, pp. 8829-30 (April 6, 1973).

8. R. G. Kennan and J. R. Lynch, Amer. Ind. Hyg. Assoc. J., 31, 587 (1970).

9. J. A. Gadsden, J. Parker, and W. L. Smith, "Determination of Chrysolite in Airborne Asbestos by an Infrared Spectrometric Technique," Atmospheric Environment, Vol. 4, pp. 667-670 (Pergamon Press, London 1970).

10. K. Goodhead and R. W. Martindale, Analyst, 94, 985-8 (1969).

11. C. G. Addingley, Annals New York Academy of Science, pp. 298-305 (New York, 1965).

12. E. R. Frank, K. R. Spurny, D. C. Sheesley, and J. P. Lodge, Jr., J. Microscopie, 9, 735 (1970).

13. Private communication: J. Murchio, University of California, Berkeley, California.

14. J. P. McClosky, Microchem., 12, 40 (1967).

15. P. D. Krivoruchko, Hyg. Sanita, 31, 69 (1966).

16. M. H. Noweir and J. Cholak, Environ. Sci. Tech., 3, 927 (1969).

17. W. R. Wolf, M. S. Taylor, B. M. Hughes, T. O. Tiernan, and R. E. Sievers, Anal. Chem., 44, 616-618 (1972).

18. D. L. Bokowski, Amer. Ind. Hyg. Assoc. J., 29, 474 (1968).

19. B. Fleet, K. V. Liberty, and T. S. West, Talanta, 17, 203 (1970).

20. C. W. Sill, C. P. Willis, and J. K. Flygare, Anal. Chem., 33, 1671 (1961).

21. J. J. Fitzgerald, A.M.A. Archives of Ind. Health, 15, 68 (1957).

22. R. G. Keenan and J. L. Holtz, Amer. Ind. Hyg. Assoc. J., 25, 254 (1964).

23. W. L. Churchill and A. H. Gillieson, Spectrochim. Acta, 5, 238 (1952).

24. M. S. Webb, R. J. Webb, and P. C. Wildy, J. Sci. Instr., 37, 466 (1960).

25. J. T. Rozsa, J. Stone, O. W. Uguccine, and R. E. Kupel, Appl. Spectrosc., 19, 7 (1965).

26. G. G. Darwin and J. H. Buddery, Beryllium, Academic Press, New York (1960), p. 373.

27. R. S. Brauman, Technical Documentary Report No. RTD TDR-63-1112, Illinois Institute of Technology, Chicago.

28. Federal Register, Vol. 38, No. 66, pp. 8830-31 (April 6, 1973).

29. E. B. Buchanan and T. D. Schroeder, "Trace Lead Analysis Employing a Dual-Channel Single-Crystal X-ray Spectrometer," Appl. Spectrosc., 24, 100-3 (1970).

30. R. C. Hirt, W. R. Doughman, and J. B. Gisclard, "Application of X-Ray Emission Spectrography to Airborne Dusts in Industrial Hygiene Studies," Anal. Chem., 28, 1649-51 (1956).

31. T. D. Schroeder, Ph.D. Thesis, University of Iowa, Iowa City, Iowa, 1969.

32. M. C. Amdur, and L. Silverman, "Direct Field Determination of Lead in Air," Arch. Ind. Hyg. Occupational Med., 10, 152-57 (1954).

33. M. Feldstein, "Analytical Methods for Air Pollution," in Progress in Chemical Toxicology, Vol. 1, A. Stolman, ed., Academic Press, New York (1963), pp. 317-338.

34. R. A. Jones and A. Szutka., "Determination of Microgram Quantities of Lead by Spectrophotometric Titration with Dithizone," Anal. Chem., 38, 779-81 (1966).

35. R. Moss and E. V. Browett, "Determination of Tetra-Alkyl Lead Vapour and Inorganic Lead Dust in Air," Analyst, 91, 428-38 (July 1966).

36. E. V. Browett, "Analytic Methods," Ann. Occupational Hyg., 8, 21-28 (1965).

37. E. Jungreis and P. W. West, "Microdetermination of Lead by the Ring-Oven Technique Applicable to Air Pollution Studies," Isr. J. Chem., 7, 413-16 (1969).

38. H. Aughey, "A Rapid Mobile Analyzer for Minute Amounts of Lead in Air," J. Opt. Soc. Am., 39, 292-93 (April 1949).

39. R. G. Keenan and D. E. Byers, "Rapid Analytical Method for Air-Pollution Surveys. The Determination of Total Particulates and the Rapid Semi-quantitative Spectrographic Method of Analysis of the Metallic Constituents in High-Volume Samples," Arch. Ind. Hyg. Occupational Med., 6, 226-30 (1952).

40. P. Bourbon and P. Dorbes, "(Air) Pollution by Lead." Pollut. Atmos., 10, 234-35 (1968). (Written in French.)

41. L. Dubois and D. L. Monkman, "Polarographic Determination of Heavy Metals in Air Samples," Am. Ind. Hyg. Assoc. J., 25, 485-91 (1964).

42. E. J. Maienthal, "Analysis of Air Pollutants," National Bureau of Standards, Microchemical Analysis Section, Washington, D.C., TN-505 p. 34-36 (October 1969).

43. N. Yamate, et al., "Automatic Continuous Analyzer of Lead in the Atmosphere," Eisei. Shikensho Hokoku (Bull. Natl. Inst. Hyg. Sci., Tokyo), No. 87, 28-31 (December 1969).

44. Air Quality Data, 1966, USDHEW, Raleigh, North Carolina, NAPCA Publication No. APTD 68-9 (1968).

45. C. D. Burnham, C. E. Moore, E. Kanabrocki, and D. M. Hattori, "Determination of Lead in Airborne Particulates in Chicago and Cook County, Illinois, by Atomic Absorption Spectroscopy," Environ. Sci. Technol., 3, 472-75 (1969).

46. C. D. Burnham, E. C. Moore, T. Kowalski, and J. Krasniewski, "Detailed Study of Lead Determinations in Airborne Particulates over Morton Grove, Illinois, by Atomic Absorption Spectroscopy," Appl. Spectrosc., 24, 411-14 (1970).

47. H. Della Fiorentina, "Determination of Cations in Air, CEBEDEAU (Cent. Belge Etude Doc. Eaux)," 23, 482 (1970). (Written in French.)

48. F. I. Grunder and E. A. Boettner, "Experimental Considerations in Atomic Absorption," Develop. Appl. Spectrosc., 7A, 201-14 (1968).

49. M. Kettner, "Comparative Determinations of Lead in Dust Precipitations by the Dithizone and Atomic Absorption Spectrophotometric Methods," Schriftenreihe. Wasser, Boden Lufthyg., No. 29, 55-62 (October 1969). (Written in German.)

50. A. A. Koch, atomic absorption specialist, private communication, Perkin Elmer Corporation, Burlingame, California.

51. E. P. Loftin, Jr., C. M. Christian, and J. W. Robinson, "Continuous Determination of Lead in Air," Spectrosc. Lett., 3, 161-74 (1970).

52. Perkin Elmer Corporation Methods Manual, "Analytical Methods for Atomic Absorption Spectrophotometry," Perkin Elmer Corporation, Burlingame, California (1971).

53. G. Thilliez, "Determination of Traces of Lead in Air by Atomic Absorption Spectrometry," Anal. Chem., 39, 427-32 (1967).

54. R. J. Thompson, G. B. Morgan, and L. Purdue, "Analysis of Selected Elements in Atmospheric Particulate Matter by Atomic Absorption," Anal. Instrum., 7, 9-17 (1969).

55. U.S. Public Health Service, "Air Pollution Measurements of the National Air Sampling Network 1957-1961," Publication No. 978 (1962), p. 3.

56. R. A. White, "Atomic Absorption Method for the Measurement of Metal Fumes," J. Sci. Instr., 44, 678-80 (1967).

57. American Conference of Government Industrial Hygienists: Threshold Limit Values of Airborne Contaminants for 1968, American Conference of Governmental Industrial Hygienists, Cincinnati, Ohio (1968), p. 11.

58. Committee on Threshold Limit Values, Documentation of Threshold Limit Values, Rev. ed., American Conference of Governmental Industrial Hygienics, Cincinnati, Ohio (1966).

59. K. Fuwa and B. L. Vallee, "The Physical Basis of Analytical Atomic Absorption Spectrometry," Anal. Chem., 35, 942-946 (1963).

60. B. M. Gatehouse and J. B. Willis, "Performance of a Simple Atomic Absorption Spectrophotometer," Spectrochim. Acta, 17, 710-718 (1961).

61. T. V. Ramakrishna et al., "Determination of Copper, Cadmium, and Zinc by Atomic Absorption Spectroscopy," Anal. Chim. Acta, 37, 20-26 (1967).

62. J. P. Riley and D. Taylor, "Atomization with Heated Air for Sensitivity Enhancement in Atomic Absorption Spectrophotometry," Anal. Chim. Acta, 40, 548-549 (1968).

63. S. L. Sachdev and P. W. West, "Concentration and Determination of Traces of Metal Ions," Anal. Chim. Acta, 44, 301-307 (1969).

64. B. Pulido, K. Fuwa, and B. L. Vallee, "Determination of Cadmium in Biological Materials by Atomic Absorption Spectrophotometry," Anal. Biochem., 14, 393-404 (1966).

65. M. P. Bratzel, Jr., R. M. Dagnall, and J. D. Winefordner, "A Comparative Study of Premixed and Turbulent Air-Hydrogen Flames in Atomic Fluorescence Spectrometry," Anal. Chem., 41, 713-718 (1969).

66. M. P. Bratzel, Jr., R. M. Dagnall, and J. D. Winefordner, "A New Simple Atomic Reservoir for Atomic Fluorescence Spectrometry," Anal. Chim. Acta, 48, 197-203 (1969).

67. M. P. Bratzel, Jr., J. M. Mansfield, Jr., and J. D. Winefordner, "Influence of Acid Concentration on the Atomic Fluorescence of Cadmium," Anal. Chim. Acta, 39, 394 (1964).

68. M. S. Cresser and T. S. West, "Some Interference Studies in Atomic Fluorescence Spectroscopy with a Continuum Source," Spectrochim. Acta, 25B, 61-68 (1970).

69. R. M. Dagnall, K. C. Thompson, and T. S. West, "An Investigation of Some Experimental Parameters in Atomic Fluorescence Spectrophotometry," Anal. Chim. Acta, 36, 269-277 (1966).

70. R. M. Dagnall, T. S. West, and P. Young, "Determination of Cadmium by Atomic Fluorescence and Atomic Absorption Spectrophotometry," Talanta, 13, 803-808 (1966).

71. R. S. Hobbs et al., "Spectroscopy in Separated Flames: IV Application of the Nitrogen-Separated Air-Acetylene Flame in Flame-Emission and Atomic-Fluorescence Spectroscopy," Talanta, 15, 997-1007 (1968).

72. J. M. Mansfield, J. D. Winefordner, and C. Veillon, "High Sensitivity Determination of Zinc, Cadmium, Mercury, Thallium, Gallium, and Indium by Atomic Fluorescence Flame Spectrometry," Anal. Chem., 37, 1049-1051 (1965).

73. N. Omenetto and G. Rossi, "Atomic Fluorescence Flame Spectrometry Using a Mercury Line Source," Anal. Chim. Acta, 40, 195-200 (1968).

74. C. Veillon et al., "Use of a Continuous Source in Flame Fluorescence Spectrometry," Anal. Chem., 38, 204-208 (1966).

75. J. D. Winefordner and R. A. Staab, "Study of Experimental Parameters in Atomic Fluorescence Flame Spectrometry," Anal. Chem., 30, 1967-1969 (1964).

76. J. D. Winefordner and T. J. Vickers, "Calculation of the Limit of Detectability in Atomic Absorption Flame Spectrometry," Anal. Chem., 36, 1947-1954 (1964).

77. J. D. Winefordner and T. J. Vickers, "Calculation of the Limit of Detectability in Atomic Emission Flame Spectrometry," Anal. Chem., 36, 1939-1947 (1964).

78. K. Zacha and Winefordner, "Use of an Argon-Hydrogen-Entrained Air Flame with a Total-Consumption Aspirator-Burner and a Simple Instrumental System in Flame Emission Spectrometry for Trace Metal Determination," Anal. Chem., 38, 1537-1539 (1966).

79. C. Auerbach et al., "Incremental Approach to Derivative Polarography," Anal. Chem., 33, 1480 (1961).

80. W. F. Kinard, R. H. Philp, and R. C. Propst, "Analytical Applications of Kalousek Polarography," Anal. Chem., 39, 1556-1562 (1967).

81. M. Kodama and T. Noda, "Application of a Mercury-Coated Platinum Electrode to the A.C. Stripping Analysis of a Trace Amount of Metal Ions," Bull. Chem. Soc. Japan, 42, 2699-2701 (1969).

82. C. K. Mann "Stationary Electrode Polarography with a Staircase Voltage Sweep," Anal. Chem., 33, 1484-1491 (1961).

83. H. I. Shalgosky and J. Watling, "High Precision Comparative Polarography," Anal. Chim. Acta, 26, 66-74 (1962).

84. R. Belcher, B. Crossland, and T. R. Fennell, "Photometric Titration of Small Quantities of Metals with Ethylenediaminetetra-Acetic Acid," Talanta, 16, 1335-1339 (1969).

85. R. T. Campbell and C. N. Reilley, "Chelometric Titrations with Amperometric End-Point Detection," Talanta, 9, 153-167 (1962).

86. S. Hanamura, "An I-Q Recorder and Its Application to Rapid Coulometric Analysis and Micro-Coulometry," Talanta, 9, 901-915 (1962).

87. G. F. Kirkbright and W. I. Stephen, "3,3′-Dehydroxybenzidine-N,N,N′,N′-Tetraacetic Acid as a Metallofluorescent Indicator in EDTA Titrations," Anal. Chim. Acta, 28, 327-330 (1963).

88. R. E. Monk and K. C. Steed, "Microchemical Methods in Radiochemical Analysis: II Determinations of Chemical Yields by Micro-Coulometry," Anal. Chim. Acta, 26, 305-315 (1962).

89. R. C. Schonebaum and E. Breekland, "Possibility of Automation of Potentiometric ADTA Titrations," Talanta, 11, 659-661 (1964).

90. O. Yamauchi, H. Tanaka, and T. Uno, "Studies on Imidazole Derivatives as Chelating Agents," Talanta, 15, 459-474 (1968).

91. B. E. Saltzman, "Colorimetric Microdetermination of Cadmium with Dithizone," Anal. Chem., 25, 493-495 (1953).

92. D. F. Boltz and E. J. Havlena, "The Ultraviolet Spectrophotometric Determination of Cadmium by the Diethyldithiocarbamate Method," Anal. Chim. Acta, 30, 565-568 (1964).

93. Committee on Threshold Limit Values, Documentation of Threshold Limit Values, 3rd ed. (American Conference of Governmental Industrial Hygienists, Cincinnati, Ohio, 1971).

94. Q. R. Stahl, National Air Pollution Control Administration Publication No. APTD-69-47.

95. E. C. Tabor, M. M. Bravemen, H. E. Bumstead, A. Cavotti, H. M. Donalson, T. Dubois, and R. E. Kupel, Health Lab. Sci., 7, 96 (1970).

96. L. Herman and V. Jettmar, Polarographic determination of selenium and selenium dioxide in the air of workshops, Z. Ges. Hyg. (Berlin), 15, No. 10, 734-37 (Oct. 1969).

97. G. D. Christian and F. J. Feldman, Anal. Chem., 43, 611 (1971).

98. R. Dams, J. A. Robins, K. A. Rahn, and J. W. Winchester, "Nondestructive neutron activation analysis of air pollution particulates," Anal. Chem., 42, 861-67 (July 1970).

99. B. W. Gandrud, and R. K. Skogerbee, Appl. Spec, 25, 243 (1971).

100. G. F. Kirkbright, M. Sargent and T. S. West, At. Absorption Newslett., 8, 34 (1969).

101. K. C. Thompson and P. C. Wildy, Analyst, 95, 776 (1970).

102. W. J. Kelleher and M. J. Johnson, Anal. Chem., 33, 1429 (1961).

103. C. A. Parker and L. G. Harvey, Analyst, 86, 54 (1961).

104. C. A. Parker and L. G. Harvey, Analyst, 87, 558 (1962).

105. J. H. Watkinson, Anal. Chem., 32, 981 (1960).

106. P. W. West, and T. V. Ramakrishna, "A Catalytic Method for Determining Traces of Seleniun, Anal. Chem., 40, 966-68 (1968).

107. T. Kawashima and M. Tanaka, Anal. Chim. Acta, 40, 137 (1968).

108. R. L. Osburn, Anal. Chem., 43, 594 (1971).

109. P. W. West, and Ch. Cimerman, "Microdetermination of Selenium with 3,3'-Diaminobenzidine by the Ring Oven Technique and its Application to Air Pollution Studies," Anal. Chem., 36, No. 10, 2013-16 (1964).

110. L. S. Alekseeva, Gig. Samit., 35, 59 (1970).

111. K. L. Cheng, Anal. Chem., 28, 1738 (1956).

112. Threshold Limit Values for 1967, Adopted at the 29th Annual Meeting of the American Conference of Governmental Industrial Hygienists, Chicago, Illinois (May 1-2, 1967).

113. W. R. Hatch and W. L. Ott, Anal. Chem., 40, 2085 (1968).

114. Federal Register, Vol. 38, No. 66, pp. 8831-32 (April 6, 1973).

115. Federal Register, Vol. 38, No. 66, p. 8836 (April 6, 1973).

116. M. S. Black and R. E. Sievers, Anal. Chem., 45, 1773 (1973).

Appendix 1

BACKGROUND INFORMATION

Introduction

Although the objective of Phase I of the study was to evaluate and select methods of analysis for the polluntants under consideration, information on the toxic effects of these pollutants was also gathered. This material was not directly used in the selection of methods of analysis, but is presented here as general background information.

Asbestos

Since the background information concerning the toxic effects of asbestos was necessarily used in the explanation of selecting a method, it will not be repeated here. Refer to Section IIIA of this report.

Beryllium

According to White and Burke,[1] beryllium compounds have relatively recently become known as hazardous industrial materials and are now considered to be among the most hazardous and toxic of the nonradioactive substances being used in industry today. Before 1943 the diseases caused by these compounds were attributed to some other agent, usually fluorides. Although overwhelming evidence for the toxicity of beryllium compounds was accumulated, the toxicologists were reluctant to accept it because they found the data confusing. In 1948 the U.S. Atomic Energy Commission Beryllium Advisory Board finally took measures to reduce atmospheric

contamination by recommending the following standards as safe exposure levels:

- The in-plant atmosphere should not exceed 2 $\mu g/m^3$ averaged over an 8-hour day.
- The concentration should not exceed 25 $\mu g/m^3$ for any period, regardless of length of duration.
- The atmosphere in the area surrounding the plant should not exceed 0.01 μ/m^3.

This action caused many industrial plants to build in the necessary safety equipment, while others such as the fluorescent lamp industry discontinued the use of beryllium compounds by general agreement.

Although beryllium is not dangerous in a solid form, it is dangerous in the form of finely divided particles, i.e., as a powder, vapor, or solution. Thus machining transforms a harmless bar of metal into a toxic material. Beryllium compounds that are appreciably soluble, such as beryllium nitrate, sulfate, fluoride, bromide, and chloride, are particularly active. The temperature at which the beryllium compound is calcined is closely related to the toxic effect. Oxides produced at high temperatures have a larger crystallite size, lower specific surface, and lower toxicity than oxides produced at low temperatures.[2] Thus the effects of beryllium poisoning are related to both the chemical nature and the physical characteristics of the beryllium compound.

The extraordinary toxicity of beryllium is illustrated by the occurrence of berylliosis among residents in the vicinity of plants in which beryllium is processed. In one area, 16 cases, including 5 fatalities, occurred within three-fourths of a mile of a plant producing beryllium from the ore.[3] An analysis of the atmosphere in this area showed concentrations of beryllium to be less than 1 $\mu g/m^3$; concentrations in 30 other areas (900 samples) were found to be 0.0001 to 0.0003 $\mu g/m^3$. It is to be noted that although lead, arsenic, and mercury pollution have a large

capacity for causing disease or death among workers, no cases of community poisoning are known.

More complete discussions of the toxic effects of beryllium are provided by White and Burke[1-3] and Gafafer.[4]

Lead

Most knowledge of lead inhalation toxicity comes from industrial experience where the atmospheric TLV for exposed workers recommended by the American Conference of Government Industrial Hygienists is 200 $\mu g/m^3$.[5,6] This value is more than 100 times the average ambient concentration in the United States. Inorganic lead at the highest airborne concentrations has not been reported as a cause of acute lead reactions. Nevertheless, the effects of lead on man in the region of concentrations less than the TLV value have been investigated by Tepper and Pfitzer at the Kettering Laboratory.[7] Their preliminary studies show no effects at or below a level of 10 $\mu g/m^3$ of lead in air.

After reviewing the material covered in the Air Quality Monographs[8] and elsewhere, the American Industrial Hygiene Association in 1969 recommended an ambient air quality value for lead of 10 $\mu g/m^3$ average over a period of 30 days. This value is only a recommendation, since the effects of lead at lower concentrations are not fully understood.

The toxicity of lead has been reviewed thoroughly by Haley.[9] The reader is referred to this publication for more information on this subject.

Cadmium

Cadmium is considered to be a toxic material. There is some evidence, inconclusive however, that cadmium in concentrations found in the atmosphere is related to cardiovascular disease and cancer.[10]

The use of cadmium materials has increased steadily since 1900. It is now being used extensively in some 35 industries, including those making solders, batteries, alloys, glass, paints, pigments, ceramics, dental amalgams, electric instruments, and vapor lamps. These uses are in addition to the large use of the material for electroplating, textile printing, welding, and zinc refining.

Cadmium pollution occurs in the air, which then pollutes the water and soil. Plants grown in areas in which the amounts of cadmium have been increased in the atmosphere contain greater quantities of cadmium than plants grown outside polluted areas.[11]

Respiration of cadmium in the air and ingestion of foodstuffs containing cadmium are the primary ways humans obtain this material. Athanassiadis[12] has discussed the toxicological effects of cadmium and should be referred to for more detail on this subject.

Selenium

Stahl in his review on selenium[13] reported very little information on human health risks. It is clear, however, that selenium is a hazardous material and that human exposure must be kept to a minimum. Stahl stated that less than one month of exposure to 800 $\mu g/m^3$ of hydrogen selenide has been known to cause symptoms of poisoning. The American Conference of Governmental Industrial Hygienists (ACGIH) set the TLV for occupational exposure during 40-hour weeks with 8-hour days at 200 $\mu g/m^3$ for all selenium compounds except selenium hexafluoride, which was set at 400 $\mu g/m^3$.[14]

Mercury

A great deal has been written about the chronic and acute toxicity of mercury and its compounds. Much of this work was summarized by Stahl.[15]

The ACGIH[16] has adopted the TLV of 100 $\mu g/m^3$ of mercury vapor and inorganic compounds of mercury for an 8-hour work day. There is considerable evidence that this TLV of 100 $\mu g/m^3$ may be too high, and it probably should be lowered to 50 $\mu g/m^3$ for an 8-hour day.[16] A TLV of 10 $\mu g/m^3$ for a 24-hour day has been suggested. A TLV of 100 $\mu g/m^3$ seems unrealistically high since air at 75°F saturated with mercury vapor would contain only 18 $\mu g/m^3$ according to Stahl.

Summary of Health Risks

A summary of the health risks entailed in exposure to asbestos and the metals included in this study is given below. These results were used in determining the sensitivities needed in the analytical procedures selected for these materials.

Pollutant	Level Considered Safe for Human Exposure*
Asbestos	(1967) TLV - 5 x 10^6 particles/ft^3 (1.8 x 10^8 particles/m^3)
Beryllium	(1959) TLV - 2 $\mu g/m^3$
Lead	(1967) TLV - 200 $\mu g/m^3$
Cadmium	(1971) TLV - 83 $\mu g/m^3$ for particulates 166 $\mu g/m^3$ for dust
Selenium	(1967) TLV - 200 $\mu g/m^3$
Mercury	(1967) TLV - 100 $\mu g/m^3$

* Recommended TLV, American Conference of Governmental Industrial Hygienists (1959, 1967, 1971).

REFERENCES

Appendix 1

1. D. W. White and J. E. Burke, The Metal Beryllium, American Society for Metals, Cleveland, Ohio (1955), p. 620.

2. Ibid., p. 621.

3. Ibid., p. 523.

4. M. W. Gafafer, Ed., Occupational Diseases, U.S. Government Printing Office, p. 93 (1964).

5. American Conference of Governmental Industrial Hygienists: Threshold Limit Values of Airborne Contaminants for 1968, American Conference of Governmental Industrial Hygienists, Cincinnati, Ohio (1968) p. 11.

6. Committee on Threshold Limit Values, Documentation of Threshold Limit Values, Rev. Ed., American Conference of Governmental Industrial Hygienists, Cincinnati, Ohio (1966).

7. L. B. Tepper and E. A. Pfitzer, "Clinical and Biochemical Approaches to the Story of Lead at Low Levels," Report No. APTD-0617, the Kettering Laboratory, University of Cincinnati, Ohio (1970).

8. R. G. Smith, "Air Quality Standards for Lead," Monograph No. 69-11, Air Quality Monographs, American Petroleum Institute, Division of Environmental Affairs, New York, New York (1969).

9. T. J. Haley, "A Review of the Toxicology of Lead," Monograph No. 69-7, Air Quality Monographs, American Petroleum Institute, Division of Environmental Affairs, New York, New York (1969).

10. L. Friberg, M. Piscator, and G. Nordberg, Cadmium in the Environment (CRC Press, Cleveland, Ohio, 1971), pp. 92-96, 107-110.

11. L. Friberg, M. Piscator, and G. Nordberg, Cadmium in the Environment (CRC Press, Cleveland, Ohio, 1971), p. 132.

12. Y. C. Athanassiadis, Preliminary Air Pollution Survey of Cadmium and Its Compounds (National Pollution Controll Administration, Publ. No. Aptd-69-32, Raleigh, North Carolina, 1969), p. 5.

13. Q. R. Stahl, National Air Pollution Control Administration Publication No. APTD-69-47.

14. Threshold Limit Values for 1967, adopted at the 29th Annual Meeting of the American Conference of Governmental Industrial Hygienists, Chicago, Illinois (May 1-2, 1967).

15. Q. R. Stahl, Litton Systems, Inc., Bethesda, Maryland, September 1969 (PB 188074).

16. Threshold Limit Values for 1967, adopted at the 29th Annual Meeting of the American Conference of Governmental Industrial Hygienists, Chicago, Illinois (May 1-2, 1967).

Appendix 2

MANUAL METHODS FOR MEASURING ASBESTOS, BERYLLIUM, LEAD, CADMIUM, SELENIUM, AND MERCURY IN SAMPLES COLLECTED FROM STATIONARY SOURCE EMISSIONS

Introduction

The methods selected for analysis of asbestos, beryllium, lead, cadmium, selenium, and mercury present in the gas streams of stationary sources are presented in detail in this appendix. These methods were laboratory and field tested, except for selenium, which was tested only in the laboratory.

These methods are intended to be used for the analysis of samples collected from gas streams in stationary sources. Because of the wide variation in conditions that may be encountered in the field, detailed sampling procedures are not given. It is left to the user of these methods to supply an appropriate sample. In general, except for asbestos, the same sampling apparatus may be used for sample collection. The actual sampling train must be adapted to the conditions encountered at each site and for the solutions required in the impingers. Some details relating to sampling are provided along with each procedure for analysis.

The basic sampling device is an EPA-recommended apparatus consisting of a probe, filter, impingers, meter box, and vacuum pump. The system is described in EPA publication APTD 0581 and is shown in Figure 2-1.

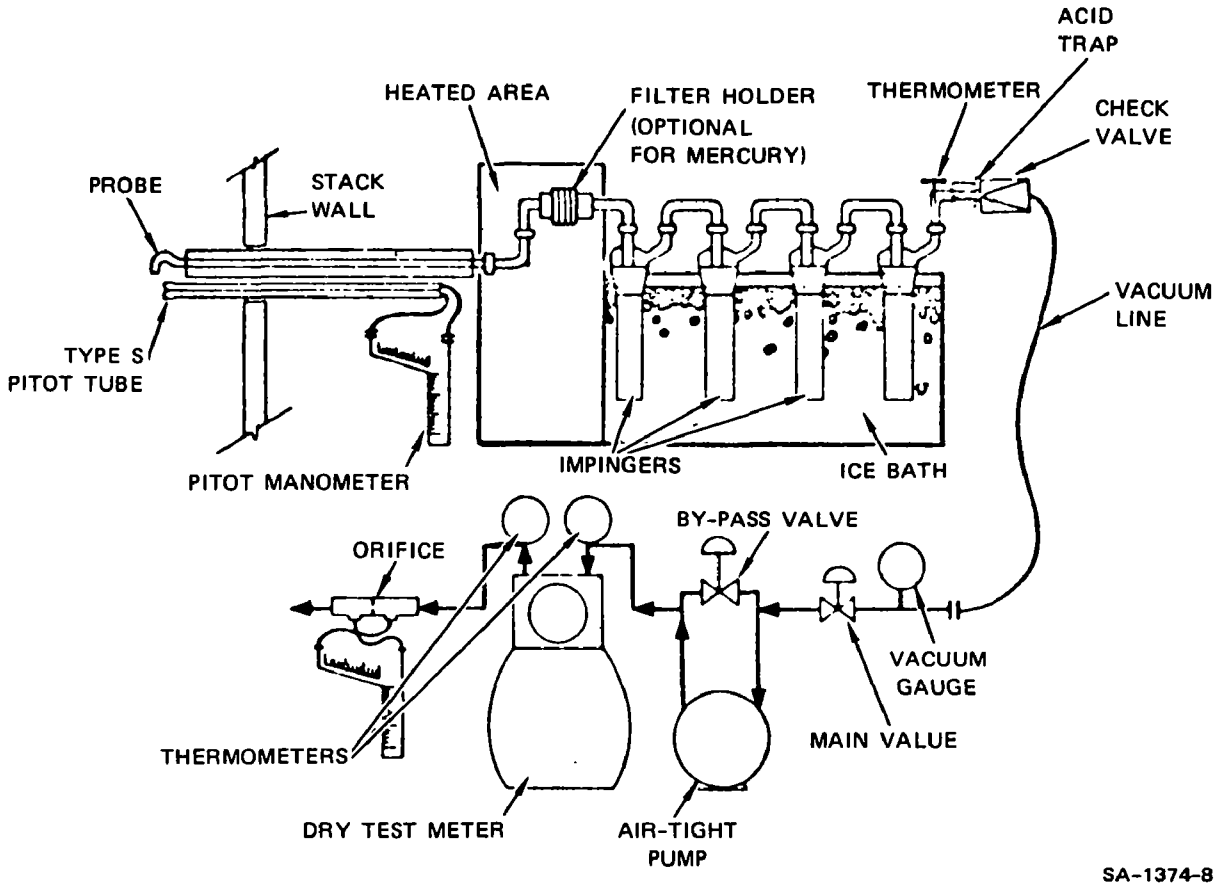

FIGURE 2-1 SAMPLING TRAIN

Definitions

Range

The range of the method of analysis is the concentrations of the material of interest in a specified volume of emissions from the source that will result in a sample that falls within the operational limits of the method of analysis if a specified volume of emissions is taken. For example, the range of selenium is 0.02-2 $\mu g/ft^3$ (0.7-70 $\mu g/m^3$) for a 100 ft^3 (3 m^3) sample. If a 100 ft^3 (3 m^3) sample is taken in this concentration range, the concentration of the solution prepared using this method of analysis will fall into the range of 2-200 μg Se/50 ml toluene, which is the range that this method of analysis is capable of analyzing.

Sensitivity

The sensitivity of the atomic absorption methods is the concentration of the source emissions that will result in 1% absorption when put into solution and analyzed, and is based in turn on the sensitivity of the atomic absorption instrument. The sensitivity of the selenium method is the smallest concentration of selenium in the source emission that can be detected when dissolved and analyzed with a signal twice that of the background noise of the colorimeter. In the asbestos method the sensitivity is the smallest concentration of the asbestos fibers in the source emission that can be detected when collected and prepared for counting by electron microscopy.

Accuracy

The accuracy of the method is the degree to which the actual concentration in the collected sample can be determined. It is stated in terms of percentage of the actual concentration and is based on laboratory analysis of standards and not on source samples.

Precision

The precision of the method is a measure of the reproducibility of the analytical portion of method. It is stated in terms of the average percentage variation among the observed values.

Units

The units used throughout the procedures were made as uniform as possible. All concentrations in the gas phase are expressed in terms of cubic feet, with approximate equivalent values in cubic meters given in parentheses. These values have been rounded for convenience; 35.3 cubic feet equal 1 cubic meter. Concentrations of materials in solutions are generally given in micrograms per milliliter.

SRI Methods of Analysis

Asbestos Source Emission Measurements SRI MA #1

ELECTRON MICROSCOPIC METHOD FOR MEASURING ASBESTOS IN STATIONARY SOURCE EMISSIONS

1. Principles and Applicability

1.1 Principles

Asbestos fibers emitted from stationary sources are collected on a Nuclepore® filter. The collected material is then transferred to an electron microscope grid. Electron micrographs are prepared, and the asbestos fibers are identified, sized, and counted by visual observation.

1.2 Applicability

This method is useful for measuring asbestos emitted from stationary sources in which at least 10% of the collected material is chrysotile asbestos. Since the method requires judgment in identifying asbestos fibers, amphibole type asbestos may be difficult to distinguish from glass or other types of fibers. The method is useful for asbestos particles varying from 0.01 to 5 microns in diameter and 0.1 to 10 microns in length.

2. Range and Sensitivity

2.1 Range

This method is useful for the determination of asbestos particles collected on Nuclepore® filters in the concentration range of 6300 to 6,300,000 fibers per cubic foot (2.2×10^5 to 2.2×10^8 fibers per cubic meter or 200,000 to 2,000,000 fibers per square centimeter of filter) using 1 to 100 ft^3 (0.03 to 3 m^3) samples.

2.2 Sensitivity

The method is designed to detect 6300 asbestos particles per cubic foot (2.2×10^5 fibers per cubic meter) of gas stream sampled when taking a 100 ft^3 (3 m^3) sample.

3. Interferences

3.1 Inorganic Fibers

Inorganic fibers with dimensions similar to those of asbestos fibers are potential interfering materials. These include glass, ceramic, metal, and man-made fibers. Chrysotile fibers can be distinguished from these interfering materials by careful observation of their morphology.

3.2 Organic Fibers

Organic fibers, such as wood, wool, cotton, and synthetics, may cause some confusion in the interpretation of photographs. These fibers could be eliminated, if present in sufficient numbers to cause a serious interference, by low temperature oxidation of the Nuclepore® filter, followed by collection of the noncombustibles on a second Nuclepore® filter from a water suspension.

3.3 Nonfibrous Matter

Nonfibrous matter, if present in excess of 90% of the collected material, may make accurate chrysotile fiber counting impossible.

4. Accuracy, Precision, and Stability

4.1 Accuracy

The accuracy of the method is dependent on the subjective evaluation of the person who does the particle counting. The counting error for an experienced particle counter should be $< \pm 10\%$. The major errors in the method are related to particle counting.

4.2 Precision

A precision of $\pm 5\%$ of the particles counted should be easily obtained.

4.3 Stability

None of the steps of the procedure is subject to great variations because of instability.

5. Apparatus

5.1 Sampling

Any apparatus having a suitable holder for a membrane filter and a pump regulated to draw the gas through the filter at the prescribed rate may be used. A sampling rate of approximately 0.1 to 0.5 ft^3/min (0.003 to 0.015 m^3/min) is suitable for a dust concentration of 6300 to 6,300,000 fibers/ft^3 (2.2×10^5 to 2.2×10^8 fibers/m^3) with a 25-mm-diameter filter, assuming a 20-mm-diameter exposed area. Nucleopore® filters, Designation Number 80 CRP 025 00 (0.8 μ), or equivalent, may be used.

5.2 Sample Treatment

5.2.1 For samples free of interfering matter, a punch, such as a cork borer that will cleanly cut a 3-mm-diameter circle from a membrane filter, may be used to prepare a portion of the collected material for electron microscopy. A means for transferring the collected material to an electron microscope grid is also required. The apparatus shown in Figure 4 of a paper by Frank et al.[1] is suitable for this purpose. It consists of a flat container, such as a petri dish, containing a thin layer of solvent and a wick for transmitting the solvent to the sample.

5.2.2 For samples contaminated with organic matter, the apparatus under 5.2.1 is required, as well as an apparatus for low temperature combustion of the organic matter without changing the morphology of the asbestos particles.

5.3 Analysis

An electron microscope capable of giving good resolution at 1000X on a 2 in. X 2 in. (5 cm x 5 cm) negative is required. An additional magnification in preparing a photographic print is necessary.

6. Reagents and Supplies

6.1 Reagents for Sampling

None.

6.2 Reagents for Sample Preparation

Chloroform (Mallinckrodt Analyzed Reagent).

Chromium chips (99.9% pure, Ernest F. Fullam, Inc.).

Silicon monoxide (Ernest F. Fullam, Inc.).

6.3 Reagents for Electron Microscopy

None.

6.4 Supplies

Photographic negatives and printing paper.

Nuclepore® filters, Designation Number 80 CRP 025 00.

6.5 Standards

Standard reference samples of asbestos from the International Union Against Cancer (UICC).

7. Procedures

7.1 Sampling

The gas stream being sampled is drawn through a Nucleopore® filter (0.8 μ) at a suitable rate for the desired period of time. Appropriate sampling times are given below for various asbestos concentrations in the gas stream in stationary sources:

Asbestos Concentration (10,000 fibers/ft^3) *	Sampling Time (min)	Sampling Rate (ft^3/min) *
0.63-6.3	200	0.5
6.3-63	20	0.5
63-630	10	0.1

* m^3 = 35.3 ft^3

The sampling times for a given site must be based on experience or at least an educated guess about the expected fiber concentration. These sampling times were chosen to give ideal fiber densities on the electron micrographs at 1000X magnification. These micrographs, which are 2 in. X 2 in. (5 cm x 5 cm), are then photographically enlarged to give pictures that are 2000X.

7.2 Sample Preparation

Silicon monoxide is evaporated at a 90-degree angle on top of the asbestos particles in the Nuclepore® filter as described by Frank et al.[1] to a thickness of approximately 1000 Å. To apply the silicon monoxide, a tungsten basket containing approximately 15 mg of silicon monoxide is placed 10 cm above the filter, and the current through it is maintained at 10 amperes for 45 seconds and at 15 to 18 amperes for approximately 90 seconds. The resulting silicon monoxide film should be deep yellow. Following deposition of the silicon monoxide, a very light film of chromium is deposited on top of it from an angle of 15 degrees. The purpose of the chromium layer is mainly for additional strength. The resulting shadows give a third dimension in the electron micrographs.

Several 3-mm circles are cut from the filter with a punch. The Nuclepore® filter is then dissolved with chloroform by the method of Frank et al., as modified by Murchio.[2] In this method a block of polyurethane foam 5-mm thick and 10-mm square is placed in a petri dish. Chloroform is poured into the petri dish to a level just below the top of the polyurethane block. A 200-mesh electrolytic copper on nickel grid is placed on the polyurethane, the sample is carefully placed on the grid with the sample side down, and the cover is placed on the petri dish. After approximately one hour, the grid is carefully moved to a new location on the polyurethane. Complete dissolution of the Nuclepore® filter may require as long as four hours. Even then, a slight residue may remain.

7.3 Electron Microscopy

Micrographs of 25 to 50 typical fields are taken on 2 in. X 2 in. (5 cm x 5 cm) negatives at 1000X magnification. Positive prints of approximately 4 in. X 4 in. (10 cm x 10 cm) are made from the negatives, giving a total magnification of 2000X.

7.4 Particle Identification, Counting, and Sizing

A trained observer can recognize electron photomicrographs of chrysotile asbestos fibers from their morphology.[3] Asbestos fibers are counted in five categories according to length: $> 10\mu$, 5 to 10μ, 2 to 5μ, 0.5 to 2μ, and $< 0.5\mu$. This count is performed for a minimum of 25 fields. For good statistics at least 100 particles in a given size category should be counted.

8. Standards and Calibration

8.1 Standards

Standard reference samples of asbestos are available from the International Union Against Cancer (UICC).[4]

8.2 Calibration

Electron photomicrographs of standard reference samples of asbestos of the type to be monitored should be used for comparison in interpreting photomicrographs of unknown samples. The determination of particle length can be calculated from electron microscope settings, photographic printing magnification, and observed lengths of fibers in the photographic prints.

9. Calculations

9.1 Particle Counting

The number of particles, n_x, in each size category for the total number of fields counted is recorded. The filter area, a, represented by the total number of fields counted is recorded. The particle density on the filter is given by n_x/a for each particle size category.

9.2 Particle Concentration

The asbestos fiber concentration in gas streams in stationary sources, C, is expressed in particles per cubic meter. It is given by

$$C = \frac{(n_x/a)A}{V}$$

wnere n_x/a is the particle density on the filter, A is the total exposed area of the filter, and V is the volume of gas (cubic meters) sampled.

10. References

1. E. R. Frank, K. R. Spurny, D. C. Sheesley, and J. P. Lodge, Jr., Microscopie 9, 735 (1970).

2. Private communication: J. Murchio, University of California at Berkeley.

3. P. Gross, R. T. deTreville, and Mn. N. Haller, Arch. Environ. Health, 20, 571 (1970).

4. V. Timbrell, J. C. Gilson, and I. Webster, Int. J. Cancer, 3, 406 (1968).

SRI Method of Analysis

Beryllium Source Emission Measurements SRI MA #2

ATOMIC ABSORPTION METHOD FOR MEASURING BERYLLIUM STATIONARY SOURCE EMISSIONS

1. Principles and Applicability

1.1 Principles

Beryllium emissions from stationary sources containing particulates, dust, fumes, and volatile inorganic beryllium compounds are collected through a probe onto a membrane filter and in liquid filled impingers. Beryllium deposits in the probe, on the filter, and in the impingers are combined and measured by atomic absorption spectrophotometry.

1.2 Applicability

This method is useful for measuring beryllium emissions from stationary sources such as machine shops. It is applicable to beryllium concentrations of approximately 0.003 to 0.30 $\mu g/ft^3$ (0.1 to 10 $\mu g/m^3$). The upper limit of this method can be extended either by taking smaller samples or by diluting the sample taken. However, the total sample volume should not be less than 75 ft^3 (2.3 m^3).

2. Range and Sensitivity

2.1 Range

The range of this method as described herein is 0.003 to 0.30 $\mu gBe/ft^3$ (0.1 to 10 $\mu g/m^3$) for a 100 ft^3 (3 m^3) sample of air. Higher concentrations can be measured if a smaller air sample is taken or if the solution is diluted before the AA spectrophotometry measurement is made. Lower concentrations can be measured at reduced accuracy.

2.2 Sensitivity

The sensitivity of the total method including sampling is dependent on the sample size. The size of the sample to be taken at a particular source cannot be predicted without detailed knowledge of the source and should be determined at the time of sample collection. The sensitivity of the method is 0.003 μg Be/ft^3 (0.1 $\mu g/m^3$) based on the collection of a 100 ft^3 (3 m^3) sample and concentration of the beryllium in the total sample into a 10-ml final volume of solution to be analyzed by AA spectrophotometry. This sensitivity represents 0.03 $\mu gBe/ml/1\%$ absorption for beryllium in the solution analyzed by AA spectrophotometry[1].

3. Interferences

3.1 Other Elements

Elements that can cause negative interference with the analyses of Be by AA using a nitrous oxide-acetylene flame are aluminum and silicon in quantities greater than 100 μg/ml.[2] This interference can be eliminated by the addition of 8-hydroxy-quinoline reagent in the case of aluminum. Since the major source of beryllium is the mineral beryl, $3BeO.Al_2O_3.6SiO_2$, it is important that this reagent be made a part of the standard method of analysis.[2]

Other metallic ions can enhance the Be signal, but these generally must be available in quantities greater than 1000 μg/ml, and in most cases 4000 to 10,000 μg/ml. These interferences can be masked by K^+.[3]

3.2 Radioactive Materials

Be is used in nuclear reactions.[4] When sampling these sources, radioactive material must be efficiently removed before the AA analysis of Be is done. These materials do not interfere with the absorption, but they do contaminate the instrument and its environment, creating a hazardous situation for the analyst. They can be removed by an acetylacetone extraction.[5]

4. Accuracy, Precision, and Stability

4.1 Accuracy

The accuracy of the analytical method after sample collection is ±6% in the concentration range of 0.03 to 0.3 $\mu g/ft^3$. This analytical method will detect concentrations of beryllium below 0.03 $\mu g/ft^3$, but with a decreased accuracy of ±20%. These accuracies are based on a 100-ft^3 (3-m^3) sample. The accuracy of the total method including sampling was not determined owing to insufficient sampling data.

4.2 Precision

The precision of the analytical method is ±4% of the concentration of beryllium found in the sample for the 0.03 to 0.3 $\mu g/ft^3$ range. The precision for samples containing beryllium below 0.03 $\mu g/ft^3$ is ±11%. The values are based on a 100-ft^3 (3-m^3) sample. Insufficient sampling data were collected to determine the precision of the total method.

4.3 Stability

Instability of the sample because of hydrolysis is not a problem at any stage of the analysis if care is taken that the pH of the beryllium solutions is 1 or less.

5. Apparatus

5.1 Sampling

Any sampling apparatus may be used that has a suitable probe, a holder for a membrane filter, impingers, and a metering system regulated to draw the gas sample through the collection train at a prescribed flow rate (see Section 7.1). The sampling train used by EPA and described in APTD-0581 may be used for this analysis. This piece of equipment can be purchased from Research Appliance Company, Route 8 and Craighead Road, Allison Park, Pennsylvania 15101. An equivalent sampling train may also be used.

5.1.1 Probe

Probe length will depend on the configuration of the source. Typical probes are 1, 1.5, and 3 meters long. The 3-meter probes are easily broken and should be used only when necessary. Suitable probes are made of stainless steel and contain a Pyrex glass liner. Glass lined probes should be used whenever possible for sampling metals. Such probes can be purchased from Research Appliance Company, Route 8 and Craighead Road, Allison Park, Pennsylvania 15101. Any equivalent probe will also be suitable.

5.1.2 Filter

Millipore Type AA filters are used in this procedure. To ensure that there is no interference with the measurement of beryllium on the AA spectrometer, blanks should be run on filters from the same batch.

5.1.3 Collection Train

The collection train described in APTD-0581, or any equivalent train, may be used. A suitable collection train, Model 2343 Staksmplr, is available from Research Appliance Company.

5.2 Sample Treatment

Extractions and sample dilution should be carried out in Pyrex glassware.

5.3 Analysis

5.3.1 Atomic Absorption Instrument

Either a single or a double beam atomic absorption spectrophotometer may be used, provided the instrument has a relative detection limit of 0.002 μg/ml as defined by Slavin.[6]

5.3.2 Lamp

A hollow cathode beryllium lamp (Perkin-Elmer No. 303-6013 or any comparable lamp) capable of producing a constant intensity spectral line at 2348 Å may be used.

5.3.3 Burner Head

A nitrous oxide burner head is required for beryllium analysis.

5.3.4 Nebulizer

It is recommended that a corrosion resistant adjustable nebulizer (Perkin-Elmer No. 303-0404) be used since the sample solutions have a high acid concentration.

5.3.5 Recorder (optional)

A multirange recorder equipped with an automatic null recorder readout accessory is preferred for these analyses.

6. Reagents and Supplies

6.1 Reagents for Sampling

8N Nitric acid (reagent grade, ACS).

6.2 Reagents for Sample Preparation

Sulfuric acid (reagent grade, ACS).

Hydrochloric acid (reagent grade, ACS).

60-62% perchloric acid (reagent grade, ACS).

Nitric acid (reagent grade, ACS).

8-Hydroxyquinoline (reagent grade, ACS).

Potassium nitrate (reagent grade, ACS).

Alconox detergent.

All solutions should be made from distilled deionized or double distilled water.

6.3 Reagents for AA Analysis

Acetylene (Welding grade).

Nitrous oxide, 98% minimum purity.

Air (bottled, if an air compressor is not used with the AA unit).

6.4 Supplies

Millipore Type AA Filters or equivalent. Whatman 41 Filter to be placed against the back side of the membrane filter as a guard against breaking the membrane filter.

6.5 Standards

High purity beryllium metal or $BeSO_4.4H_2O$. (New Brunswick Laboratories, New York; U.S. Atomic Energy Commission analyzed samples).

7. Procedure

7.1 Sampling

Beryllium source emissions are drawn through a probe, a filter (millipore membrane filter Type AA backed by a Whatman 41 filter), a series of four impingers (the first two contain 100 ml of 8 N nitric acid, the third is dry, and the fourth contains silica gel), an acid trap containing 100g of 4-8 mesh soda lime, a metering system, and a pump. Sampling should be done isokinetically. A total sample volume of approximately 100 ft^3 ($\sim 3\ m^3$) should be taken. For example, a sampling time of two hours at a flow rate of ~ 0.8 cfm may be used.

7.2 Glassware Preparation

All glassware should be rinsed and soaked for at least two hours with Alconox detergent immediately after being used because beryllium will absorb on the walls in time and contaminate later runs. Glassware should be rinsed with hot water and soaked in 8 N HNO_3 for at least two hours to ensure that it is free of beryllium. Before use the glassware should be rinsed with tap water and finally with distilled water.

7.3 8-Hydroxyquinoline Preparation

Dissolve 100 g of 8-hydroxyquinoline in approximately 150 ml of 6 N HCl and then dilute the solution to 500 ml with water to get a 20% w/v solution.

7.4 Sample Preparation

Wash the material that has collected in the sampling probe into a 600-ml beaker with as little concentrated nitric acid as possible. Rinse the probe with distilled water and add this solution to the beaker. Place the two filters and any loose particulate matter in the beaker and begin evaporating the solution on a hotplate with an asbestos mat. As

the evaporation proceeds, add a portion of the impinger solutions, and continue these additions until the solution is evaporated to dryness. Cool the residue and add 35 ml concentrated nitric acid. Heat on a hot-plate until light brown fumes are evident to destroy any organic matter. Cool and add 5 ml concentrated sulfuric acid and 5 ml concentrated perchloric acid to the beaker, again place the beaker on the hotplate and very cautiously evaporate the solution to dryness. This entire sample preparation procedure should be performed in a perchloric acid hood using required safety measures. Dissolve the residue in a minimum of 25% (by volume) hydrochloric acid and filter it through a glass fiber filter. Reduce the volume of the filtrate to 3 ml and transfer it to a 10-ml volumetric flask. Wash the beaker twice with 2 ml of H_2O and add the washings to the flask. Add 1 ml of the 8-hydroxyquinoline solution (or equivalent for volumes greater than 10 ml), dilute the solution to the mark, and mix thoroughly. If other metallic ions are present in quantities that would interfere with the beryllium analysis and that can be masked by K^+, the solution should be made 10,000 μg/ml in K^+ by adding KNO_3. (If the concentration of this solution is greater than 5.0 μg Be/ml, dilute as necessary with 1 N HCl to adjust the concentration to that of the standards.)

7.5 Standards Preparation

7.5.1 Stock Solution I

A solution containing 1000 μgBe/ml is prepared by dissolving 1 g of high purity beryllium metal (New Brunswick Laboratories, New York; U.S. Atomic Energy Commission analyzed samples) in 83 ml of hydrochloric acid and diluting to 1000 ml. Commercially available (e.g., Ventron Corporation) standard stock solutions for AA that have a concentration of 1000 μg/ml can be used.

7.5.2 Stock Solution II

Prepare this solution immediately before use. Dilute 10 ml of stock solution I to 1000 ml with 1 N HCl. This solution contains 10 μgBe/ml.

7.6 AA Unit Preparation

Allow the unit to warm up for a minimum of 30 minutes with the beryllium cathode tube in place. Check to be sure that the nitrous oxide-acetylene burner head is installed and ignite the flame according to the proper procedure for the use of nitrous oxide (use air-acetylene with a very fuel-rich yellow flame and then switch from air to nitrous oxide. Optimize the unit with a standard solution of 2.0 μg/ml.

7.7 Standards and Filter Check Procedure

Pipette 0.0, 0.5, 1.0, 2.0, and 5.0 ml of stock solution II into 50-ml beakers. Add 2.0-ml aliquots of stock solution II to beakers that contain filters of the type used in air sampling devices. At least 5 out of every 100 filters should be checked. Treat all the samples as directed in 7.4 above. For samples whose concentrations are below 0.5 μgBe/ml scale expansion can be used. Standards should be made at 0.05, 0.10, 0.20 and 0.50 μgBe/ml. Measure the absorbance of the standards by atomic absorption.

7.8 AA Analysis of Samples

Determine the beryllium content of the samples (7.4) by AA spectrophotometry against standards set forth in 7.7.

8. Standards and Calibrations

8.1 Standards

Use either pure beryllium metal, analytical grade $BeSO_4.4H_2O$, or a commercially prepared standard as the standard reference material. U.S. Atomic Energy Commission analyzed samples can be obtained from New Brunswick Laboratories, New York.

8.2. Calibrations

Prepare a calibration curve for beryllium by plotting the concentration of the standards against their absorbance.

9. Calculations

Using the calibration curve (see 8.2), determine the micrograms of Be per milliliter of solution (7.4). Calculate the concentration of Be in the source using the following formula:

$$\mu g\ Be/m^3 = \frac{C \times V \times {}^{d}F}{m^3 *}$$

where

C = concentration of Be μg/ml from curve

V = original volume into which the entire sample is dissolved for analysis

${}^{d}F$ = dilution factor = diluted volume/original volume (use only if the solution was diluted)

m^3 = total volume of gas sample in cubic meters.

---

*At sample temperature and pressure with appropriate corrections for humidity if a dry basis is desired.

10. References

1. D. L. Bokowski, Am. Ind. Hyg. Assoc. J., 29, 475 (1968).

2. E. Fleet, K. V. Liberty, and T. S. West, Talanta 17, 207 (1970).

3. Ibid., p. 205.

4. R. J. Powell, P. J. Phennah, and J. E. Still, Analyst 85, 347-354 (May 1960).

5. Bokowski, op. cit., p. 479.

6. W. Slavin, Atomic Absorption Spectroscopy (Interscience Publishers, New York, 1968), p. 61.

SRI Methods of Analysis

Lead Source Emission Measurements SRI MA #3

ATOMIC ABSORPTION METHOD FOR MEASURING LEAD IN STATIONARY SOURCE EMISSIONS

1. Principles and Applicability

1.1 Principles

Lead emissions from stationary sources containing particulate matter, dust, fumes, and volatile lead compounds are collected through a probe onto a glass fiber filter and in impingers using a metering system capable of controlling and determining flow rates. The filter samples are ashed below 100°C[1] to remove organic matter. The combined extracted filter sample and impinger solutions are analyzed by atomic absorption spectroscopy.

1.2 Applicability

This method is useful for monitoring gas streams in stationary sources, which contain lead concentrations in the ranges of 0.06 to 2 $\mu g/ft^3$ (2 to 70 $\mu g/m^3$). The upper limit of this method can be extended by diluting the sample taken or taking a smaller sample. The method is applicable for particulates, dust, fumes, and volatile lead compounds; however, the successful collection of organo lead compounds is not yet certain under these conditions.

2. Range and Sensitivity

2.1 Range

The range of the method is 0.06 to 2 μg Pb/ft^3 (2 to 7 $\mu g/m^3$) for a 100 ft^3 (3 m^3) sample. Higher concentrations can be determined if the sample is diluted before it is measured by AA spectroscopy, if a smaller sample is taken, or if a less intense Pb-line is used.

2.2 Sensitivity

The sensitivity of the total method, including sampling, is dependent on the sample size. The size of the sample to be taken at a particular source cannot be predicted without detailed knowledge of the source and should be determined at the time of sample collection. The sensitivity of the method is 0.06 $\mu g/ft^3$ (2 μg Pb/m^3) based on the collection of a 100 ft^3 (3 m^3) sample and concentration of the lead in the total sample into a 10-ml final volume of solution to be analyzed by AA spectrometry. This sensitivity represents 0.5 μg/ml/1% absorption for lead in the solution analyzed by AA spectroscopy as described herein.[2]

3. Interferences

Source emissions will vary according to source, size, and type of control equipment at each geographical location, resulting in samples of unique and complex compositions. These complex samples may contain interfering materials (such as, PO_4^{3-} and CO_3^{2-}), which can either suppress or enhance the atomic absorption results. Burnham et al.[3] used a series standard addition technique to overcome this effect on airborne particulate samples collected from ambient air. Although organic matter can interfere with Pb analysis,[4] it can be removed by low temperature activated oxygen ashing.

4. Accuracy, Precision, and Stability

4.1 Accuracy

The accuracy of the analytical method after sample collection is ±3% in the concentration range of 0.6 to 2 $\mu g/ft^3$ (20 to 70 $\mu g/m^3$). Below 0.6 $\mu g/ft^3$ (20 $\mu g/m^3$), accuracy is ± 4%. Insufficient data were collected to establish the accuracy of the total method including sampling.

4.2 Precision

The precision of the analytical method is ± 2% of the concentration of lead in the 0.6 to 2 $\mu g/ft^3$ (20 to 70 $\mu g/m^3$) range and ± 3% below 0.6 $\mu g/ft^3$ (20 $\mu g/m^3$). Insufficient data were collected to establish the precision of the total method including sampling.

4.3 Stability

Adsorption can occur on the sides of the container in lead solutions of low concentration (1 μg/ml). The presence of 0.1 molar HNO_3 in the lead solution will eliminate the adsorption problem. None of the other steps of the procedure are subject to variations because of instability.

5. Apparatus

5.1 Sampling

Any sampling apparatus may be used that has a suitable probe, a holder for a glass fiber filter, impingers, and a metering system regulated to draw the gas sample through the collection train at a prescribed flow rate (see Section 7.1). The sampling train used by EPA and described in APTD-0581 may be used for this analysis. This piece of equipment can be purchased from Research Appliance Company, Route 8 and Craighead Road, Allison Park, Pennsylvania 15101. An equivalent sampling train may also be used.

5.1.1 Probe

Probe length will depend on the configuration of the source. Typical probes are 1, 1.5 and 3 meters long. The 3-meter probes are easily broken and should be used only when necessary. Suitable probes are made of stainless steel and contain a Pyrex glass liner. Glass lined probes should be used whenever possible for sampling metals. Glass lined probes can be purchased from Research Appliance Company, Route 8 and Craighead Road, Allison Park, Pennsylvania 15101. Any equivalent probe will also be suitable.

5.1.2 Filter

A filter made of glass fibers should be used; i.e., a filter such as the Gelman Type A, which is compatible with nitric acid extractions.

5.1.3 Collection Train

The collection train described in APTD-0581, or any equivalent train, may be used. A suitable collection train, Model 2343 Staksamplr, is available from Research Appliance Company.

5.2 Sample Treatment

A low temperature, activated oxygen, dry asher (Tracerlab Model LTA-600L) is needed to decompose organic matter in the sample. It should be capable of sustaining temperatures of 75°C.

Extractions and sample dilution should be carried out in Pyrex glassware. Polyethylene may be used for breakers and flasks; however, only Pyrex glassware is recommended for volumetric equipment.

5.3 Analysis

5.3.1 Atomic Absorption Instrument

Either a single or a double beam atomic absorption spectrophotometer may be used, provided the instrument has a relative detection limit of 0.01 μg/ml as defined by Slavin.[5]

5.3.2 Lamp

A hollow cathode lamp Perkin-Elmer No. 303-6039 or Varian Techtron No. 56-100029-00, or any comparable lamp) capable of producing a constant intensity spectral line at 2833 Å may be used.

5.3.3 Burner Head

A Boling three-slot burner (Perkin-Elmer No. 303-0401) using an air-acetylene fuel system is required for lead analysis.

5.3.4 Nebulizer

It is recommended that a corrosion resistant adjustable nebulizer (Perkin-Elmer No. 303-0404) be used since the sample solutions have a high acid concentration.

5.3.5 Recorder (Optional)

A multirange recorder equipped with an automatic null recorder readout accessory is preferred for these analyses.

6. Reagents and Supplies

6.1 Reagents for Sampling

Nitric acid (reagent grade, ACS).

6.2 Reagents for Sample Preparation

Oxygen (industrial grade)

Acetone (reagent grade, ACS)

Nirtic acid (reagent grade, ACS)

Distilled H_2O.

6.3 Reagents for Atomic Absorption Spectroscopy

Air (bottled, if an air compressor is not used with the AA unit)

Acetylene (welding grade).

6.4 Supplies

Gelman Type A glass fiber filter

6.5 Standards

Lead nitrate $[Pb(NO_3)_2]$ 99.8+% purity.

7. Procedure

7.1 Sampling

Lead source emissions are drawn through a probe, a filter (gelman Type A or Millipore membrane filter Type AA). A series of four impingers (the first two impingers contain 100 ml of 8 N nitric acid, the third is dry, and the fourth contains silica gel), an acid trap containing 100 g of 4-8 mesh soda lime, a metering system, and a pump. Sampling should be done isokinetically. A total sample volume of approximately 100 ft^3 (~ 3 m^3) should be taken. For example, a sampling time of two hours at a flow rate of ~ 0.8 cfm may be used.

7.2 Lead Check on Filters

A glass fiber filter is used in the sampler since it is very compatible with nitric acid extractions. However, since it is possible that lead impurities may be present in the filter material, glass fiber filters from the same lot as the one used for sample collection must be analyzed for lead. Five out of every hundred filters should be checked according to the procedures given in 7.3.

7.3 Sample Preparation

Molecular fragments from organic compounds in the flame atomizer tend to interfere with lead analyses.[4] Organic matter present in the sample may be removed by low temperature ashing techniques using activated oxygen (formed by passing oxygen through a high-frequency electromagnetic field) impinged upon the sample, which results in slow burning at temperatures of 70 to 80^{0}C. Care should be used if volatile organolead molecules are present.

The lead is extracted from the probe by washing with a minimal amount (not to exceed 100 ml) of the 8 N nitric acid. The filter is added to the probe wash. The washings and filter are added to the impinger solutions. After all particulate has dissolved (heat and soak for 2 hours if necessary) the solution is filtered using a medium porosity filter suitable for use with nitric acid such as a glass fiber filter. The filtered solution is then evaporated in a hood to 1.0 ml and finally diluted to an exact volume of 10.0 ml with distilled deionized water. (For smaller total lead content these volumes can be reduced.) A single AA reading is made to determine if the lead concentration is within the required range of the standards (see Section 7.4). The concentration is adjusted as necessary by diluting or concentrating the sample.

7.4 Standards Preparation

Commercially available (e.g., Ventron Corporation) standard stock solutions for AA that have a concentration of 1000 μg/ml can be used. To make an equivalent solution, place 1.60 g of lead nitrate (99.8% pure) in a 1000 ml volumetric flask. Add about 900 ml deionized distilled water and 6 ml of concentrated nitric acid to dissolve the solid, dilute to the mark, and mix thoroughly.

A more dilute standard (50 μg/ml) is made from the stock solution by diluting a 5-ml aliquot to 100 ml with 0.1N HNO_3. From this solution 1, 2, 3, and 4 ml aliquots are taken and placed in 50 ml beakers. To each beaker add 5 ml of 8 N HNO_3. This will cancel matrix effects that might arise between the samples and the standards because of differences in acid concentrations. The procedure in 7.3 is then followed. A reagent blank should also be run.

For samples whose concentrations are below 5 μg Pb/ml, a scale expansion can be used. Standards should be made at 1.0, 2.0, 3.0 and 5.0 μg Pb/ml.

7.5 Atomic Absorption Spectroscopy

Standard operating procedures as supplied by the manufacturer are used for the atomic absorption spectrophotometer. These instructions describe the technique of turning on the unit, inserting the hollow cathode tube, and igniting the flame. The unit should be allowed to warm up and stabilize for 15 to 30 minutes before the flame is ignited and measurements are begun. The absorbances of the prepared solutions are determined using the 2833 Å lead absorption line by aspirating these solutions one at a time into the flame and taking a reading from the recording device 30 to 60 seconds after the aspiration has begun. This allows the recorder enough time to reach a stable reading. Allow water to aspirate through the flame between samples.

A calibration curve is prepared by plotting the absorbance of the standards (ordinate) as a function of the concentration (abscissa) in μg/ml. The calibration curve should be linear over the concentration range used in the analysis. The calibration curve may be used for a direct concentration determination of the unknown sample.

If there is evidence of matrix effects in the type of sample being analyzed, it may be necessary to use a method of additions.[2,3]

8. Standards and Calibration

8.1 Standards

Lead nitrate (99.8% pure).

8.2 Calibration

The calibration curve for lead should be obtained from 0 to 20 μg/ml by plotting the absorbance for the standard working solutions (ordinate) against the concentrations (abscissa) in μg/ml. This range may be expanded, but it is preferable to keep the concentration of the unknown sample within the optimum rather than to extend the range.

9. Calculations

The concentration of Pb in the gas stream is given by the following equation:

$$\mu g\ Pb/m^3 = \frac{C \times V \times {}^{d}F}{m^{3*}}$$

where

C = concentration of Pb in μg/ml from the AA calibration curve

V = original volume into which entire sample is dissolved for analysis.

${}^{d}F$ = dilution factor = diluted vol/original vol (used only if the solution was diluted)

m^3 = total volume of gas stream sampled in cubic meters.

---

*At sample temperature and pressure with appropriate corrections for humidity if dry basis is desired.

10. References

1. Air Quality Data, 1966, USDHEW, Raleigh, North Carolina, NAPCA Publication No. APTD 68-9 (1968), p. 30.

2. Analytical Methods for Atomic Absorption Spectrophotometry, Perkin-Elmer Corporation (March, 1971).

3. C. D. Burnham, E. E. Moore, T. Kowalski, and J. Krasniewski, "Detailed Study of Lead Determination in Airborne Particulates over Morton Grove, Illinois, by Atomic Absorption Spectroscopy," Appl. Spectrosc., 24 411-414 (1970).

4. H. Della Fiorentina, "Determination of Cations in Air," CEBEDEAU (Cent. Belge Etude Doc. Eaux), 23, 482 (1970). (Fr).

5. W. Slavin, Atomic Absorption Spectroscopy (Interscience Publishers, New York, 1968), p. 61.

SRI Methods of Analysis

Cadmium Source Emission Measurements SRI MA #4

ATOMIC ABSORPTION METHOD FOR MEASURING CADMIUM IN STATIONARY SOURCE EMISSIONS

1. Principles and Applicability

1.1 Principles

Stationary source emissions containing cadmium dust, particulates, fumes, and volatile cadmium compounds are collected by using a vacuum sampling system containing a probe, impingers, and a filter. The collected material is dissolved in an acid and filtered. The cadmium concentration is measured on an atomic absorption spectrometer using an air-acetylene flame and a cadmium hollow cathode tube.

1.2 Applicability

This method can be used to monitor stationary source gas streams in which cadmium exists as particulate matter, mists, or fumes, in concentrations in the range of 0.025 to 0.2 $\mu g/ft^3$ (0.8 to 7 $\mu g/m^3$). The upper limit of this method can be extended by diluting the sample taken or by taking a smaller sample.

2. Range and Sensitivity

2.1 Range

The range of the method is 0.025 to 0.2 $\mu g/ft^3$ (0.8 to 7 $\mu g\ Cd/m^3$) for a 100 ft^3 (3 m^3) sample. Higher concentrations can be determined if the sample is diluted before it is measured by AA spectroscopy or if a smaller sample is taken.

2.2 Sensitivity

The sensitivity of the total method including sampling is dependent on the sample size. The size of the sample to be taken at a particular source cannot be predicted without detailed knowledge of the source and should be determined at the time of sample collection. The sensitivity of the method is 0.025 $\mu g\ Cd/ft^3$ (0.8 $\mu g\ Cd/m^3$) based on the collection of a 100 ft^3 (3 m^3) sample and concentration of the cadmium in the total sample into a 10-ml final volume of solution to be analyzed by AA spectroscopy. The sensitivity represents 0.25 $\mu g/ml/1\%$ absorption for cadmium in the solution analyzed by AA spectroscopy as described herein.[1]

3. Interferences

Unique and complex conditions exist at each stationary source or type of source, making chemical interferences in any given sample difficult to predict. However, on the basis of laboratory conditions, Ramakrishna et al.[2] found that $B_4O_7^{2-}$, SiO_3^{2-}, CO_3^{2-}, HCO_3^-, and $HAsO_4^-$ tend to interfere in the AA analysis for cadmium. These interferences are effectively overcome by acidification of the sample or by adding ethylenediaminetetraacidic acid (EDTA) to the solutions. Pulido et al.[3] found that phosphate in concentrations above 0.1 M could decrease the AA response and that sodium chloride in concentrations above 0.01 M could increase the response. It is not anticipated that stationary source emissions of cadmium will contain large amounts of NaCl or phosphates. The method of Lehnert et al.[4] can be used to extract the Cd^{2+} from a pH 3 solution (adjusted if necessary) using a chelating agent such as ammoniumpyrrolidine dithiocarbamate (APDC) in methylisobutylketone (MIBK).

4. Accuracy, Precision, and Stability

4.1 Accuracy

The accuracy of the analytical method after sample collection based on a 100 ft^3 (3 m^3) sample is ±3% in the concentration range of 0.05 to 0.2 $\mu g/ft^3$ (2 to 7 $\mu g/m^3$), providing the sampling device has been calibrated and the AA spectrometer is operating at optimum sensitivity. Below 0.05 $\mu g/ft^3$ (2 $\mu g/m^3$), the accuracy is ±4%. Insufficient data were gathered to determine the accuracy of the total method including sampling.

4.2 Precision

The precision for the analytical method for determining cadmium in stationary source gas streams is ± 3% with concentrations of cadmium of 0.025 to 0.2 $\mu g/ft^3$ (0.8 to 7 $\mu gCd/m^3$). Insufficient data were gathered to determine the precision of the total method including sampling.

4.3 Stability

Instability of the sample is not a problem at any stage of the analysis.

5. Apparatus

5.1 Sampling

Any sampling apparatus may be used that has a suitable probe, a holder for a glass fiber or membrane filter, impingers, and a metering system regulated to draw the gas sample through the collection train at a prescribed flow rate (see Section 7.1). The sampling train used by EPA and described in APTD-0581 may be used for this analysis. This piece of equipment can be purchased from Research Appliance Company, Route 8 and Craighead Road, Allison Park, Pennsylvania 15101. Any equivalent sampling train may also be used.

5.1.1 Probe

Probe length will depend on the configuration of the source. Typical probes are 1, 1.5 and 3 meters long. The 3-meter probes are easily broken and should be used only when necessary. Suitable probes are made of stainless steel with a Pyrex glass liner and can be purchased from Research Appliance Company, Route 8 and Craighead Road, Allison Park, Pennsylvania 15101. Any equivalent probe will also be suitable.

5.1.2 Filter

The filter should be made of glass fibers; e.g., a Gelman Type A filter, which is compatible with nitric acid extractions. It is possible that cadmium impurities may be present in some glass filters (see Section 7.2). It may be necessary to leach the filters with acid, thoroughly rinse them with distilled water, and dry them before they can be used in the sampling device.

5.1.3 Collection Train

The collection train described in APTD-0581 or any equivalent train may be used. A suitable collection train, model 2343 Staksamplr, is available from Research Appliance Company.

5.2 Sample Treatment

Extractions and dilutions of the samples are carried out in Pyrex or borosilicate glassware. (Although polyethylene beakers can be used, only glassware is recommended for the volumetric equipment.)

5.3 Analysis

5.3.1 Atomic Absorption Spectrometer

Either a single or double beam atomic absorption spectrometer may be used. Instrument selection should be limited to reliable manufacturers with instruments operable at a minimum cadmium sensitivity of 0.005 μg/ml.[5]

5.3.2 Lamp

A cadmium hollow cathode lamp (Perkin-Elmer No. 303-6016, Varian Techtron No. 56-100008-00, or any comparable lamp) operating at 2288 Å is required for the procedure.

5.3.3 Burner Head

A Boling three-slot burner (Perkin-Elmer No. 303-0401 for use with an air-acetylene flame is required.

5.3.4 Recorder (Optional)

A multirange recorder equipped with an automatic null recorder readout accessory is preferred for these analyses because it increases ease of analyses and may reduce errors because drifts in the AA signals are easily detected with a continuous record.

6. Reagents and Supplies

6.1 Reagents for Sampling

Nitric acid (reagent grade, ACS).

6.2 Reagents for Sample Preparation

Oxygen (industrial grade)

Nitric acid (reagent grade, ACS)

Acetone (reagent grade, ACS).

6.3 Reagents for Atomic Absorption Spectroscopy

Air (bottled, if an air compressor is not used with the AA unit.

Acetylene (welding grade)

6.4 Supplies

Gelman Type A glass fiber filter

6.5 Standards

Cadmium metal 99.99+% purity or

Ventron (Alfa Products) cadmium AA standard.

7. Procedures

7.1 Sampling

A vacuum system is used to draw samples through a probe, a filter, and a series of impingers (the first two contain 100 ml of 8 N nitric acid, the third is dry, and the fourth contains silica gel). The impingers should be followed by an acid trap containing 100 g of 4-8 mesh soda lime. Sampling should be done isokinetically. A total sample volume of 100 ft^3 ($\sim$ 3 m^3) should be taken. For example, a sampling time of two hours at a flow rate of 0.8 cfm may be used.

7.2 Cadmium Check on Filters

A glass fiber filter is used in the sampler since it is very compatible with nitric acid extractions. However, since it is possible that cadmium impurities may be present in the filter material, 5 fiber filters from every lot of 100 used for sample collection should be analyzed for cadmium.

Each filter is extracted with two 8 N nitric acid washes of sufficient volume to cover them. Each filter is washed with two 10-ml portions of distilled water. All washes are combined in a beaker, filtered, and evaporated on a hot plate nearly to dryness (approximately 1 ml). The remaining solution is then quantitatively transferred to a 10-ml volumetric flask and diluted to the mark. The solution is analyzed for cadmium on the AA spectrometer. A blank should be run. If the cadmium background is found to be greater than 0.25 μ per filter, a preliminary leaching step must be used to eliminate it. The filters are leached with 8 N HNO_3, washed with distilled water, dried and repackaged.

7.3 Sampling Preparation

The cadmium-containing materials collected in the probe and on the glass filter are dissolved with a minimal amount (not to exceed 100 ml) of 8 N nitric acid. The solution can be poured repeatedly through the probe and then used to leach the filter. This solution is added to those from the impingers, and the combined solutions plus the filter are allowed to stand until the combined particulates have dissolved (heat if necessary) or for a maximum of two hours. Heat may be applied if necessary. This treatment should dissolve all cadmium compounds. The resulting solution is filtered through a medium porosity filter suitable for use with nitric acid, such as a glass fiber filter. The volume is reduced by heating in a hood or using vacuum pumping to a volume of approximately 1 ml. The filtrate is then quantitatively transferred to a 10-ml volumetric flask and diluted to the mark with distilled water; for greater sensitivity, samples may be diluted to smaller volumes. An initial absorption reading of the solution is taken on the AA spectrophotometer and the concentration is adjusted if necessary by diluting an aliquot until the absorption reading on the AA spectrophotometer falls within those readings obtained from the standards. A blank should be run with each set of samples.

7.4 Standards Preparation

One gram of accurately weighed, high purity cadmium metal is dissolved in 100 ml of 1 N HNO_3. This solution is diluted to 1000 ml with distilled water to obtain a 1000-μg/ml stock solution. Commercial AA standards at this concentration are available and can be used.

From the above solution another stock solution is prepared by taking a 10-ml aliquot and diluting it to 100 ml to obtain a 100-μg/ml solution. A working stock solution is prepared by diluting a 5-ml aliquot to 100 ml to obtain a 5.0-μg/ml solution. The working standards are prepared by adding 0, 1, 2, 3, and 4 ml aliquots of the working stock solution to

50-ml beakers. To this, 5 ml of 8 N HNO_3 is added. The solution is filtered and the volume is reduced by heating to 1 ml. The resulting solution is quantitatively transferred to a 10-ml volumetric flask and diluted to the mark with distilled water.

7.5 Atomic Absorption Spectrometry

Standard operating procedures as supplied by the manufacturer are used for the atomic absorption spectrometer. The unit should be allowed to warm up and stabilize for 15 to 30 minutes before the flame is ignited and measurements are begun. The absorption of the prepared solutions is determined using the 2288 Å cadmium absorption line by aspirating these solutions one at a time into the flame and taking a reading from the recording device 30 to 60 seconds after the aspiration has begun (this allows the recorder enough time to reach a stable reading). Distilled water is allowed to aspirate through the flame between samples.

A calibration curve is prepared by plotting the absorbances of the standards (ordinate) as a function of the concentration (abscissa) in μg/ml. The calibration curve should be linear over the concentration range used in the analysis. The calibration curve may be used for a direct concentration determination of the unknown sample.

8. Standards and Calibration

8.1 Standards

Pure cadmium metal.

8.2 Calibration

The calibration curve for cadmium should be obtained for solutions containing 0.5 to 2 μg/ml. This range may be expanded; however, it is preferable to dilute or concentrate the samples to keep them within the optimum range. The calibration curve is obtained by plotting absorbance (ordinate) as a function of concentration (abscissa) in μg/ml.

9. Calculation

To determine the concentration of Cd in the source sampled, use the formula:

$$\mu g\ Cd/m^3 = \frac{C \times V \times {}^{d}F}{m^3 *}$$

where

C = concentration of Cd in $\mu g/ml$ from curve

V = original volume into which entire gas sample is dissolved

${}^{d}F$ = dilution factor = diluted vol/ original vol
(used only if solution was diluted)

m^3 = total volume of gas stream sample in cubic meters.

---

*At sample temperature and pressure with appropriate corrections for humidity if a dry basis is desired.

10. References

1. Analytical Methods for Atomic Absorption Spectrophotometry, Perkin-Elmer Corporation (March 1971).

2. T. V. Ramakrishna, J. W. Robinson, and P. W. West, "Determination of Copper, Cadmium, and Zinc by Atomic Absorption Spectroscopy," Anal. Chem. Acta, 37, 20-26 (1967).

3. P. Pulido, K. Fuwa, and B. L. Vallee, "Determination of Cadmium in Biological Materials by Atomic Absorption Spectrophotometry," Anal. Biochem., 14, 393-404 (1966).

4. E. Lehnert, K. H. Schaller, and T. Haas, "Atomabsorptionsspectrometrische Cadmiumbestimmung in Serum und Harn," Z. Klin. Chem., 6, 174-176 (1968).

5. W. Slavin, Atomic Absorption Spectroscopy (Interscience Publishers, New York, 1968), p. 61.

SPECTROPHOTOMETRIC METHOD FOR MEASURING SELENIUM IN STATIONARY SOURCE EMISSIONS

1. Principles and Applicability

1.1 Principles

Selenium emissions from stationary sources containing particulates, dusts, fumes, and volatile selenium compounds are collected through a probe onto a glass fiber filter and in impingers using a metering system capable of controlling and determining flow rates. The collected materials are treated with nitric acid and perchloric acid to solubilize the selenium and to destroy organic matter. The selenium content is determined by spectrophotometry. The basis for this method was described for ambient air by Tabor et al.[1] This method is based on oxidation of the sample with nitric and perchloric acids followed by measurement of Se(IV) as the red reaction product of Se(IV) and 2,3-diaminonaphthalene (DAN).

1.2 Applicability

This method is useful for monitoring gas streams in stationary sources in which the selenium concentrations are in the range of 0.02 to 2 $\mu g/ft^3$ (0.7 to 70 $\mu g/m^3$) The upper limit of the method can be extended by either diluting the sample taken or by taking a smaller sample. The method is applicable for particulates, dust, fumes, and volatile selenium compounds except H_2Se, which is not trapped in the water impingers. (Further laboratory work on this method will be necessary to provide a suitable impinger system for H_2Se.)

2. Range and Sensitivity

2.1 Range

The range of the method is 0.02 to 2 $\mu g/ft^3$ (0.7 to 70 μg Se/m^3 for a 100 ft^3 (3 m^3) sample.

2.2 Sensitivity

The sensitivity of the total method including sampling is dependent on the sample size. The size of the sample to be taken at a particular source cannot be predicted without detailed knowledge of the source and should be determined at the time of sample collection. The sensitivity of the method is 0.02 $\mu g/ft^3$ (0.7 $\mu g/m^3$) based on the collection of a 100 ft^3 (3 m^3) sample and concentration of the selenium in the total sample into a 50-ml final volume of solution to be analyzed by spectrophotometry as described herein. Greater sensitivity can be achieved by using a fluorimetric method of measuring the selenium content[1] or by extracting the selenium containing complex into a smaller volume of toluene in this procedure.

3. Interferences

The primary interference observable at a 2000-fold excess of foreign ion to selenium is attributable either to substances such as hypochlorite, which oxidize the reagent, or to reducing agents such as Sn(II), which reduce selenium to the elemental state. Ions such as zinc, aluminum, or sodium can be present at a millionfold excess without causing any interference. Macro amounts of such ions as Al(III), Zn(II), Cu(II), Ca(II), Cd(II), Mn(II), Ni(II), Mg(II), Ba(II), and Sr(II) are separated from selenium (IV) by ion exchange (by passing the sample in solution through Dowex 50 WX 8 resin). The presence of approximately 2500 μg of tellurium causes little interference in the analysis of a sample containing 10 μg of selenium. Such high concentrations of tellurium are normally not to be expected. Since nitrite ion interferes, it is important, in preparing the sample for analysis, to use the minimum amount of nitric acid in dissolving the sample and to remove the oxides of nitrogen by boiling. Nitrate ion does not appreciably interfere with the method. Nevertheless, since both the sample solution to be analyzed and the standard stock selenium solution are prepared by the dissolution of the particulates or elemental selenium in nitric acid, it is important to establish a blank reading by running through the entire analytical procedure with an unused filter.

4. Accuracy, Precision, and Stability

4.1 Accuracy

The accuracy of the analytical method after sample collection is ± 14% in the concentration range of 0.02 to 2 $\mu g/ft^3$ [9]0.7 to 70 $\mu g/m^3$) Since no sampling data were collected, the accuracy of the total method could not be determined.

4.2 Precision

The precision of the analytical method after sample collection is ± 9%. Since no sampling data were collected, the precision of the total method was not determined.

4.3 Stability

4.3.1 Losses of selenium in samples containing organic material have been demonstrated to be negligible in the nitric-perchloric acid digestion step if care is taken to oxidize the sample slowly.[2]

4.3.2 Solid, pure DAN is slowly oxidized in air to form a yellow-brown material. Although an aqueous solution is more readily oxidized, it can be stored under refrigeration for three days without being sufficiently altered to affect its use for the intended purpose. Under the conditons described, no significant difference is perceptible in the result of an analysis when either commercial or purified reagents are used.

4.3.3 All work can be performed under normal laboratory conditions; i.e., in daylight, without deaerating solutions or purifying reagents.

5. Apparatus

5.1 Sampling

Any sampling apparatus may be used that has a suitable probe, a holder for a glass fiber or membrane filter, impingers, and a metering system regulated to draw the gas sample through the collection train at a prescribed flow rate (see Section 7.1). The EPA sampling train described in APTD-0581 may be used for this analysis.[3] Similar equipment can be purchased from Research Appliance Company, Route 8 and Craighead Road, Allison Park, Pennsylvania 15101. An equivalent sampling train may also be used.

5.1.1 Probe

Probe length will depend on the configuration of the source. Typical probes are 1, 1.5 and 3 meters long. The 3-meter probes are easily broken and should be used only when necessary. Suitable probes are made of stainless steel and contain a Pyrex glass liner. Glass lined probes should be used whenever possible. Glass lined probes can be purchased from Research Appliance Company, Route 8 and Craighead Road, Allison Park, Pennsylvania 15101. Any equivalent probe will also be suitable.

5.1.2 Filter

The filter should be made of glass fibers; e.g., a Gelman Type A filter, which is compatible with nitric acid extractions. Selenium impurities may be present in some glass filters (see Section 7.2) and it may be necessary to leach the filters with acid, thoroughly rinse them with distilled water, and dry them before they can be used in the sampling device.

5.1.3 Collection Train

The collection train described in APTD-0581, or any equivalent train, may be used.[3] A suitable collection train, Model 2343 Staksamplr, is available from Research Appliance Company.

5.2 Sample Treatment

Ordinary laboratory Pyrex glassware that has been thoroughly cleaned should be used for these analyses. Glassware required includes 500-ml and 100-ml beakers, 125-ml separatory funnels fitted with Teflon stopcocks and stoppers, volumetric flasks, pipets, and a 25-ml buret filled to the 10-ml mark with Dowex 50 WX 8, 50 to 100 mesh resin in the acid form. Also needed are a pH meter with microelectrodes (glass-calomel), a stirrer, and a hot plate.

5.3 Spectrophotometry

A Beckman Model DU, Perkin-Elmer Model 202, or Bausch and Lomb Spectronic 20 Spectrophotometer, with 1-cm cells may be used. Any equivalent spectrophotometer may be used.

6. Reagents and Supplies

6.1 Reagents

6.1.1 All reagents should be prepared from analytical grade chemicals low in selenium, using distilled water.

6.1.2 2,3-Diaminonaphthalene (DAN), $C_{10}H_6(NH_2)_2$, reagent--dissolve 1.00 g of 2,3-diaminonaphthalene (Aldrich Chemical Company, Milwaukee, Wisconsin, or equivalent) in 1 liter of 0.01 N hydrochloric acid, using a stirrer. Pure DAN is a white crystalline solid. It is slowly oxidized in air to form a yellow-brown material. Although an aqueous solution is more readily oxidized, it can be stored for three days under refrigeration without being sufficiently altered to affect its use for the intended purpose.

6.1.3 0.1 M Ethylenediaminetetraacetic acid disodium salt (EDTA) solution--dissolve 33.6 g of the disodium salt of EDTA in a volume of distilled water and dilute to 1000 ml in a volumetric flask.

6.1.4 0.1 M Sodium fluoride, NaF, solution--dissolve 0.42 g of NaF in a volume of distilled water and dilute to 100 ml in a volumetric flask.

6.1.5 0.1 M Sodium oxalate, $Na_2C_2O_4$ solution--dissolve 1.34 g of $Na_2C_2O_4$ (Sorenson, Fisher Certified Reagent) in a volume of distilled water and dilute to 100 ml in a volumetric flask.

6.1.6 Toluene, $C_6H_5CH_3$--Fisher Certified Reagent or equivalent. Purified Fisher's toluene may also be used.

6.1.7 1 N and 0.1 N Sodium hydroxide, NaOH--dissolve 40 g of NaOH pellets in a volume of distilled water and dilute to 1000 ml in a volumetric flask (1 N NaOH). Dissolve 4.0 g of NaOH pellets in a volume of distilled water and dilute to 1000 ml in a volumetric flask (0.1 N NaOH).

6.1.8 Concentrated nitric acid, HNO_3-- Fisher Reagent 69-71% by weight, 15.8 N, or equivalent analytical reagent grade.

6.1.9 Sixty percent perchloric acid, $HClO_4$--Fisher Reagent, 60-62% by weight, or equivalent analytical grade.

6.1.10 Dowex 50 WX 8, 50 to 100 mesh ion exchange resin.

6.2 Supplies

Gelman Type A glass fiber filter.

7. Procedure

7.1 Sampling

Selenium source emissions are sampled by drawing a gas sample through a probe, a glass fiber filter (Gelman Type A), a series of four impingers (the first two contain distilled water, the third is dry, and the fourth contains silica gel), and a metering system. Sampling should be done isokinetically. A total sample volume of approximately 100 ft^3 (3 m^3) should be taken; e.g., a sampling time of two hours at a flow rate of 0.8 cfm (0.02 m^3/min) may be used.

7.2 Selenium Check on Filters

A glass fiber filter is used in the sampler since it is very compatible with nitric acid extractions. However, since selenium impurities possibly may be present in the filter material, several glass fiber filters from the same lot as the one used for sample collection must be analyzed for selenium.

Five filters out of every lot of 100 are used for the selenium spot-check. The filters used for this check are treated and analyzed by the procedures given in 7.3 and 7.4. If the selenium background is found to be greater than 0.7 μg per filter, a preliminary leaching step must be used to eliminate the excess. The filters are leached with 8 N HNO_3, washed with distilled water, dried and repackaged.

7.3 Sample Preparation

The selenium is extracted from the probe by washing with a minimal amount (not to exceed 100 ml) of the 8 N nitric acid. This extracted selenium solution is combined with the impinger solutions. The filter is added and allowed to soak until the particulate is dissolved. The solution is then filtered. The filtrate is then evaporated in a hood to approximately 10 ml and 1 ml of 60% perchloric acid is added cautiously (a perchloric acid hood and the necessary equipment to support the glassware should be used). The mixture is allowed to stand

at room temperature with occasional shaking until the foaming ceases. Heat from a burner is then applied (with great caution) until the initial rapid oxidation begins. The heat is removed and the oxidation is allowed to coninue until reaction has subsided. This treatment destroys any organic matter present and oxidizes any elemental selenium to Se(IV). After dissolution, careful boiling will remove oxides of nitrogen and some excess nitric acid. The solution is reduced to a volume of 1 ml; 25 ml of distilled water is then added and the solution is then reboiled. Removal of oxides of nitrogen through boiling is necessary to prevent nitrite ion interference. The resulting solution can then be analyzed for selenium by following the prescribed procedures given in Section 7.5.

7.4 Standard Preparation

7.4.1 Standard stock selenium solution (selenious acid, H_2SeO_3)--a solution containing 0.50 mg of selenium/ml is prepared by dissolving 50 mg of pure selenium metal (Fisher Certified Reagent, specially purified) in a few drops (minimum necessary) of concentrated nitric acid, boiling gently to expel brown fumes, and making up to 100 ml with distilled water.

7.4.2 Standard working selenium solutions--the standard stock solution, as prepared under 7.4.1, is diluted as necessary for standard working solution. Dilute 20 ml of stock selenium solution to 100 ml with distilled water. This solution contains 100 μg Se/ml. Dilute 10 ml of 100 μg/ml solution to 100 ml with distilled water. This solution contains 10 μg Se/ml.

7.5 Spectrophotometric Procedure

7.5.1 After appropriate treatment to dissolve the sample, the solution is adjusted to pH 2 with 1 N and 0.1 N NaOH and is passed through a 25-ml buret filled to the 10-ml mark with Dowex 50 WX 8, 50- to 100-mesh resin in the acid form at a flow rate of 0.5 ml/minute. The

flow rate is controlled by adjusting the stopcock in the buret. The effluent is collected and any remaining traces of selenium are washed from the column with 20 ml of distilled water. To this solution is added 5 ml of 0.1 M EDTA, 1 ml of 0.1 M sodium fluoride, and 1 ml of 0.1 M sodium oxalate; the solution is then readjusted to pH 1.5-2.5 with the 1 and 0.1 N NaOH. Five ml of 0.1% DAN solution is then added, mixed thoroughly, and allowed to stand for two hours.

7.5.2 The solution is transferred to a separatory funnel, exactly 50 ml of toluene is added, and the piazselenol is extracted by shaking for 30 seconds. Separate. To remove droplets of water, the toluene layer is filtered into the cuvette through a small filter paper plug placed in the stem of the separatory funnel.

7.5.3 The absorbance is determined at 380 nm using a reagent blank. The calibration curves follow Beer's law over the range 0 to 200 μg of selenium per 50 ml of toluene in a 1-cm cell at this wavelength.

8. Calibration

8.1 Prepare a set of standard solutions by appropriately diluting with distilled water, accurately measured volumes of standard stock selenium solution (section 7.4.1), and standard working selenium solutions (section 7.4.2). Representative concentrations should range from 0-200 μg of selenium for the spectrophotometric procedure (use the 100 and the 10 μg Se/ml working selenium solutions, section 7.4.2 Include a reagent blank.

8.2 Follow the procedures outlined under sections 7.3 and 7.5.

8.3 Construct calibration curves by plotting absorbance values versus μg Se/50 ml in the standard solution. The calibration curves follow Beer's law over the range 0-200 μg selenium/50 ml of toluene in a 1-cm cell at prescribed wavelength.

9. Calculations

9.1 Use the calibration curve to determine the concentration of selenium in the solutions measured by spectrophotometry.

9.2 Concentration of selenium in the sample is

$$\mu g\ Se/m^3 = \frac{C \times V \times {}^{d}F}{m^3\ *}$$

C = concentration of Se in μg/ml from curve

V = original volume into which entire gas sample was dissolved

${}^{d}F$ = dilution factor = diluted volume/original volume (use only if solution was diluted)

m^3 = total volume of gas sample in cubic meters.

*At sample temperature and pressure with appropriate corrections for humidity if a dry basis is desired (see Ref. 3).

10 References

1. E. C. Tabor, M. M. Braverman, H. E. Bumstead, A. Cavotti, H. M. Donaldson, T. Dubois, and R. E. Kupel, Health Lab. Sci. 7, 96-101 (1070).

2. J. H. Watkinson, Anal. Chem., 38, 92 (1966).

3. EPA publication APTD-0581.

SRI Methods of Analysis

Mercury Source Emissions Measurements SRI MA #6

FLAMELESS ATOMIC ABSORPTION METHOD FOR MEASURING MERCURY IN STATIONARY SOURCE EMISSIONS

1. Principles and Applicability

1.1 Principles

Mercury emissions from stationary sources containing mercury compounds and elemental mercury are sampled through a probe, followed by a pyrolysis furnace and a solid scrubber for SO_2, and collected in impingers containing ICl solution. The mercury deposited in the probe is combined with that collected in the impingers and the total mercury concentration is measured by flameless atomic absorption spectroscopy.[1]

1.2 Applicability

This method is useful for monitoring stationary sources for total mercury content measured as elemental mercury, regardless of the chemical form in which the mercury actually exists in the source. It is applicable to mercury concentrations of approximately 0.005 to 0.05 $\mu g/ft^3$ (0.15 to 1.5 $\mu g/m^3$). The upper limit of the method can be extended by either diluting the sample taken or by taking a smaller sample. However, the sample volume taken should not be less than 50 ft^3 (1.5 m^3). Typical sources for which this method was designed are chloralkali plants and nonferrous metal smelters in which gas streams contain primarily nitrogen and oxygen.

2. Range and Sensitivity

2.1 Range

The range of this method as described herein is 0.005 to 0.05 μg Hg/ft^3 (0.15 to 1.5 $\mu g/m^3$) for a 100 ft^3 (3 m^3) sample for samples containing less than 0.1% SO_2. For sources containing high levels of SO_2 (~7%) the procedure will sample only approximately 10 ft^3 (0.3 m^3) before the SO_2 scrubber becomes ineffective and sampling must be discontinued. In this case the range of the method is 0.05 to 0.5 μg Hg/ft^3 (1.5 to 15 $\mu g/m^3$). The range is dependent on the amount of gas sampled, which is in turn dependent on the SO_2 present and the capacity of the BaO_2 scrubber.

2.2 Sensitivity

The sensitivity of the method is 0.005 $\mu g/ft^3$ (0.15 $\mu g/m^3$) based on a 100 ft^3 (3 m^3) sample and a 50 ml aliquot of the 400 ml total volume of ICl solution used to collect the sample. The size of the sample to be taken at a particular source cannot be predicted without detailed knowledge of the source and should be determined at the time of sample collection.

3. Interferences

The primary interferences with this method are attributable to materials that reduce ICl in the liquid scrubbing system. Any reducing agent, such as SO_2, is a potential interfering material unless it is removed upstream from the sample collecting impingers. In the present method SO_2 is removed by passing the sample through a scrubber packed with a granular material coated with BaO_2, which converts the SO_2 to a nonvolatile barium salt. All mercury compounds are converted to elemental mercury vapor in a pyrolysis tube (750°C) so the mercury can be quantitatively collected in the ICl solution. Some of the particulate mercury may be deposited in the probe. This material is washed out with ICl solution, which converts any mercury to Hg^{+2}.

4. Accuracy, Precision, and Stability

4.1 Accuracy

The accuracy of the analytical method after sample collection is ±3% in the range of 0.005 to 0.05 $\mu g/ft^3$ (0.15 to 1.5 $\mu g/m^3$) for a 100 ft^3 (3 m^3) sample. Insufficient sampling data were collected to determine the accuracy of the total method.

4.2 Precision

The precision of the analytical method after sample collection is estimated to be ±5% for a 100 ft^3 (3 m^3) sample. The precision of the total method including sampling could not be determined owing to the lack of sampling data.

4.3 Stability

The collected samples containing a concentration of Hg^{+2} on the order of 1 $\mu g/ml$ should be analyzed within a few hours of sampling. It has been our experience that mercury is lost from the sample solutions when they are allowed to stand more than a few hours after collection.

5. Apparatus

5.1 Sampling

Any sampling apparatus may be used that has a suitable probe, impingers, and a metering system regulated to draw the gas sample through the collection train at a prescribed flow rate (see Section 7.1).[2] Such equipment can be purchased from Research Appliance Company, Route 8 and Craighead Road, Allison Park, Pennsylvania 15101. An equivalent sampling train may also be used. In addition to this basic equipment, provision must be made for a pyrolysis tube to decompose mercury compounds and a solid scrubber to remove sulfur dioxide. A cooling loop should be provided between the pyrolysis tube and the scrubber. The pyrolysis tube and BaO_2 scrubber are placed between the probe and first impinger, the pyrolysis tube being first.

5.1.1 Probe

Probe length will depend on the configuration of the source. Typical probes are 1, 1.5 and 3 meters long. The 3-meter probes are easily broken and should be used only when necessary. Suitable probes are made of stainless steel and contain a Pyrex glass liner. Glass lined probes should be used whenever possible. Glass lined probes can be purchased from Research Appliance Company, Route 8 and Craighead Road, Allison Park, Pennsylvania 15101. Any equivalent probe will also be suitable.

5.1.2 Filter

The use of the pyrolysis tube to convert all the mercury present in the emission gases collected to a vapor state makes the use of a filter unnecessary unless large quantities of particulates are present. The filter should be made of glass fibers; e.g., a Gelman Type A filter, which is compatible with acid extractions. It is possible that mercury impurities may be present in some glass filters (see Section 7.2). It may be necessary to leach the filters with ICl, thoroughly rinse them first with 6 N HCl and then with distilled water, and dry them before they can be used in the sampling device.

5.1.3 Collection Train

The EPA collection train,[2] or any equivalent train, may be used. A suitable collection train, Model 2343 Staksamplr, is available from Research Appliance Company.

5.2 Sample Treatment

Ordinary laboratory Pyrex glassware that has been thoroughly cleaned may be used for these analyses. The glassware should be rinsed with 1.1 v/v nitric acid, tap water, 0.1 M ICl, and distilled water, in that order.

5.3 Spectrophotometry

5.3.1 Atomic Absorption Instrument

Either a single or a double beam atomic absorption spectrophotometer may be used, provided the instrument has a relative detection limit of 0.5 μg/ml. The AA unit should be fitted with a glass cell (approximately 1.5 in o.d. x 7 in.) with quartz glass windows.

5.3.2 Lamp

A hollow cathode mercury lamp capable of producing a constant intensity spectral line at 2537 Å is used.

5.3.3 Gas Sampling Bubbler

Tudor Scientific Glass Company Smog Bubbler, Catalogue No. TP-1150, or equivalent.

5.3.4 Recorder

To match output of spectrophotometer.

6. Reagents and Supplies

6.1 Stock Reagents

6.1.1 Potassium iodide--reagent grade (ACS).

6.1.2 Distilled water.

6.1.3 Potassium Iodide Solution, 25%--Dissolve 250 g. of potassium iodide (reagent 6.1.1) in distilled water and dilute to 1 liter.

6.1.4 Hydrochloric acid--concentrated.

6.1.5 Potassium iodate--reagent grade (ACS).

6.1.6 Iodine monochloride (ICl) 1.0 M--To 889 ml of 25% potassium iodide solution (reagent 6.1.3), add 889 ml of concentrated hydrochloric acid. Cool to room temperature. While stirring vigorously, slowly add 150 g of potassium iodate and continue stirring until all free iodine has dissolved to give a clear orange-red solution. Cool to room temperature and dilute to 2000 ml with distilled water. The solution should be kept in amber bottles to prevent degradation.

6.1.7 Sodium hydroxide pellets--reagent grade (ACS).

6.1.8 Nitric acid--reagent grade (ACS).

6.1.9 Hydroxylamine sulfate--reagent grade (ACS).

6.1.10 Sodium chloride--reagent grade (ACS).

6.1.11 Mercuric chloride--reagent grade (ACS).

6.2 Sampling Reagents

6.2.1 Absorbing solution, 0.1 M ICl-- dilute 100 ml of the 1.0 M ICl stock (reagent 6.1.6) to 1 liter with distilled water. The solution should be kept in glass bottles to prevent degradation. This reagent should be stable for at least two months; to ensure quality, however, periodic checks by thiosulfate titration should be performed.

6.2.2 Wash acid--1:1 v/v nitric acid: water

6.2.3 Distilled, deionized water.

6.2.4 Silica gel--indicating type, 6- to 16-mesh, dried at 350°F for two hours.

6.2.5 Filter (optional)--glass fiber, Gelman Type A, Mine Safety Appliances 1106BH, or equivalent. A filter may be necessary in cases where the gas stream to be sampled contains large quantities of particulate matter.

6.2.6 BaO_2 supported on aluminum silicate--BaO_2 (Bakers Analyzed Reagent), 100 parts by weight is mixed with 70 parts by weight of 40- to 60-mesh aluminum silicate. The mixture is heated at 420°C for one hour and sieved, while hot, through a 25-mesh sieve. One hundred parts by weight of additional BaO_2 is added to the sieved product and it is mixed again. The resulting mixture is heated for one hour at 420°C, then broken up and sieved hot. The fraction that is 25- to 65-mesh is used to pack the SO_2 scrubber.

6.3 Analysis

6.3.1 Sodium hydroxide, 10 N--dissolve 40.0 g of sodium hydroxide pellets in distilled water and dilute to 100 ml.

6.3.2 Reducing agent, 12% hydroxylamine sulfate, 12% sodium chloride--to 60 ml of distilled water, add 12 g of hydroxylamine sulfate and 12 g of sodium chloride. Dilute to 100 ml. This quantity is sufficient for 20 analyses and must be prepared daily.

6.3.3 Aeration gas--zero grade air.

6.3.4 Hydrochloric acid, 0.3 N--dilute 25.5 ml of concentrated hydrochloric acid to 1 liter with distilled water.

7. Procedure

7.1 Sampling

Prior to assembly, all glassware (probe, impingers, and connectors) is cleaned by rinsing with wash acid, tap water, 0.1 M ICl, tap water, and finally distilled water. Use 80 ml. of the 0.1 M ICl as a blank in the sample analysis.

Mercury source emissions are drawn through a probe, a pyrolysis tube at 750°C, a BaO_2 scrubber at 400 to 420°C, and a series of impingers (the first two contain 150 ml of 0.1 M ICl, the third is empty, and the fourth contains 200 g of silica gel). The impingers should be followed by an acid trap, such as a Mine Safety Appliance Air Line Filter, catalog number 81857 with an acid absorbing cartridge. A total of 100 ft^3 (3 m^3) of gas from the source should be sampled; e.g., a sampling time of two hours at a flow rate of $\sim$ 0.8 ft^3/min (0.02 m^3/min) may be used.

7.2 Mercury Check on Filters (Only if a Filter is Used)

A glass fiber filter is used in the sampler because it is very compatible with acid extractions. However, since mercury impurities may be present in the filter material, 5 glass fiber filters from each lot of 100 must be analyzed for mercury.

Each filter is extracted with two 0.1 M ICl washes of sufficient volume to cover them. The solution is then transferred to a clean 100 ml analysis tube and analyzed for mercury according to the procedure given in 7.5.3 and 7.5.4. If the mercury background is found to be greater than approximately 50 ng per filter, a preliminary leaching as described in 5.1.2 must be used.

7.3 Sample Preparation

All glass storage bottles and the graduated cylinder used in sample preparation must be precleaned as indicated in Section 7.1. This operation should be performed in an area free of mercury contamination. Industrial laboratories and ambient air around mercury-using facilities are not normally free of mercury contamination. When the sampling train is moved, care must be exercised to prevent breakage and contamination.

Disconnect the probe from the impinger train. Place the contents (measured to ±1 ml) of the first three impingers into a 500-ml sample bottle. Rinse the probe and all glassware between it and the pyrolysis tube and the exit end of the SO_2 scrubber back half of the third impinger with two 50-ml portions of 0.1 M ICl solution. Add these rinses to the first sample bottle. For a blank, place 80 ml of the 0.1 M ICl in a 100 ml sample bottle. If used, place the filter and 100 ml of 0.1 M ICl in another 100 ml sample bottle. Retain a blank. If an additional test is desired, the glassware can be carefully double rinsed with distilled water and reassembled. However, if the glassware is to be out of use more than two days, the initial acid wash procedure must be followed.

7.4 Standard Preparation

7.4.1 Stock solution--add 0.1354 g of mercuric chloride to 80 ml of 0.3 N hydrochloric acid. After the mercuric chloride has dissolved, adjust the volume to 100 ml using 0.3 N HCl. One ml of this solution is equivalent to 1 mg of free mercury.

7.4.2 Standard solutions--prepare calibration solutions by serially diluting the stock solution (7.4.1) with 0.3 N hydrochloric acid. Prepare solutions at concentrations in the linear working range for the instrument to be used. Solutions of 1 μg/ml, 0.1 μg/ml, and 0.01 μg/ml have been found acceptable for most instruments. Store all solutions in glass-stoppered, glass bottles. These solutions should be

stable for at least two months; however, to ensure quality, periodic analyses should be run and checked against previous runs.

7.5 Analysis

7.5.1 Apparatus preparation--clean all glassware according to the procedure of Section 7.1. Adjust the instrument setting according to the instrument manual, using an absorption wavelength of 2537 Å.

7.5.2 Analysis preparation--adjust the air delivery pressure and the needle valve to obtain a constant air flow of about 1.3 l/min. The analysis tube should be bypassed except during aeration. Purge the equipment for two minutes. Prepare a sample of mercury standard solution (7.4.2) according to Section 7.5.3. Place the analysis tube in the line and aerate until a maximum peak height is reached on the recorder. Remove the analysis tube, flush the lines, and rinse the analysis tube with distilled water. Repeat with another sample of the same standard solution. This purge and analysis cycle is to be repeated until peak heights are reproducible.

7.5.3 Sample preparation--just prior to analysis, transfer a sample aliquot of up to 50 ml to the cleaned 100 ml analysis tube. Adjust the volume to 50 ml with 0.1 M ICl, if required. Add 5 ml of 10 N sodium hydroxide, cap tube with a clean glass stopper, and shake vigorously. Prolonged, vigorous shaking at this point is necessary to obtain an accurate analysis. Add 5 ml of the reducing agent (reagent 6.3.2), cap tube with a clean glass stopper and shake vigorously and immediately place in sample line.

7.5.4 Mercury determination--After the system has been stabilized prepare samples from the sample bottle according to Section 7.5.3. Aerate the sample until a maximum peak height is reached on the recorder. The mercury content is determined by comparing the peak heights of the sample to the peak heights of the calibration

solutions. If collected samples are out of the linear range, the samples should be diluted. Prepare a blank from the 100-ml bottle according to Section 7.5.3 and analyze to determine the reagent blank mercury level.

8. Calibration

Prepare a calibration curve over a range of 50 to 500 ng Hg using the standards in Section 7.4.2. Plot the peak heights versus the concentrations of mercury in the standard solutions. Standards should be interspersed with the samples since the calibration can change slightly with time. A new calibration curve should be prepared for each new set of samples run.

9. Calculations

The concentration of Hg in the gas stream is displayed in the following equation:

$$\mu g\ Hg/m^3 = \frac{C \times V \times {}^{d}F}{m^{3*}}$$

C = concentration of Hg in μg/ml from AA calibration curve.

V = original volume into which entire gas sample is dissolved.

${}^{d}F$ = dilution factor = diluted volume/original volume (use only if original solution was diluted)

m^3 = total volume of gas stream sample in cubic meters.

*At sample temperature and pressure with appropriate corrections for humidity if a dry basis is desired.

10. References

1. W. R. Hatch and W. L. Ott, "Determination of Sub-Microgram Quantities of Mercury by Atomic Absorption Spectrophotometry," Anal. Chem., 40:2085-87, 1968.

2. Robert M. Martin, (Construction Details of Isokinetic Source Sampling Equipment, "Environmental Protection Agency, APTD-0581.

3. W. Slavin, Atomic Absorption Spectroscopy (Interscience Publishers, New York, 1968), p 61.

TECHNICAL REPORT DATA

(Please read Instructions on the reverse before completing)

1. REPORT NO. EPA-650/4-74-015	2.	3. RECIPIENT'S ACCESSION NO.
4. TITLE AND SUBTITLE Survey of Manual Methods of Measurements of Asbestos, Beryllium, Lead, Cadmium, Selenium, and Mercury in Stationary Sources Emissions		5. REPORT DATE September 1973
		6. PERFORMING ORGANIZATION CODE
7. AUTHOR(S) D.M. Coulson, D.L.Hayes, M.R. Balazs, and M.P. Dolder		8. PERFORMING ORGANIZATION REPORT NO. SRI Project PYU-1374
9. PERFORMING ORGANIZATION NAME AND ADDRESS Stanford Research Institute Menlo Park, California 94025		10. PROGRAM ELEMENT NO. 1HA327
		11. CONTRACT/GRANT NO. 68-02-0310
12. SPONSORING AGENCY NAME AND ADDRESS Environmental Protection Agency National Environmental Research Center Quality Assurance & Environmental Monitoring Laboratory Research Triangle Park, North Carolina 27711		13. TYPE OF REPORT AND PERIOD COVERED Final 6-29-71 - 9-30-73
		14. SPONSORING AGENCY CODE

15. SUPPLEMENTARY NOTES

16. ABSTRACT

During Phase I of this study sources of information were searched for methods of analysis for asbestos, beryllium, lead, cadmium, selenium, and mercury that would be suitable for analyzing stationary source emissions. The primary sources of information were the technical literature, telephone and direct interviews with staff members of companies that are probable stationary sources of emissions of the pollutants, and contact with the Project Officer assigned by EPA. During the literature search additional background information was obtained on the toxicity of the pollutants in this study.

Methods of analysis were then chosen on the basis of a survey of current knowledge on methodology, ease of using the procedure, availability of the equipment needed to perform the tests, sensivitity based upon proposed EPA standards of emission and threshold limit values (TLV) adopted by the American Conference of Government Industrial Hygienists (ACGIH), and specificity requirements. One method was chosen for each pollutant. A detailed discussion of how the methods of analysis were selected is presented.

During Phase II the methods of analysis selected in Phase I were tested, evaluated and then modified if necessary. All methods were initially tested in the laboratory. The asbestos method was tested on samples collected at an asbestos mill. Field sampling was conducted for beryllium at a beryllium machining facility, but only small amounts of beryllium were collected. The methods for lead and cadmium were tested successfully on samples collected at a municipal incinerator. No field test were conducted for selenium because work had been stopped on this pollutant before field testing began. Field test was performed on mercury in the development of the method of analysis in Phase I. Further development and/or evaluation of these methods of analysis probably should be made before they are ready for routine use in measuring source emissions.

17. KEY WORDS AND DOCUMENT ANALYSIS

a. DESCRIPTORS	b. IDENTIFIERS/OPEN ENDED TERMS	c. COSATI Field/Group

18. DISTRIBUTION STATEMENT Unlimited	19. SECURITY CLASS *(This Report)* Unclassified	21. NO. OF PAGES 165
	20. SECURITY CLASS *(This page)* Unclassified	22. PRICE

EPA Form 2220-1 (9-73)