United States
Environmental Protection
Agency

Region II Office
26 Federal Plaza
New York, N.Y. 10007

Air

EPA

ERT Document No. P-7421
EPA 902/4-80-001
March 1980

Contract No. BOA 6802 2542
Task Order No. 4
John Hum, Project Officer

Prepared for
U.S. Environmental Protection Agency
Region II
26 Federal Plaza
New York, New York 10007

Final Report

Environmental monitoring training program developed by ERT for the Puerto Rico Environmental Quality Board

Prepared by
Edward W. Fasci
Hector R. Diaz

EPA 902/4-80-001

FINAL REPORT

ENVIRONMENTAL MONITORING TRAINING PROGRAM DEVELOPED BY ERT FOR THE PUERTO RICO ENVIRONMENTAL QUALITY BOARD

Contract #BOA 6802 2542
Task Order No. 4
John Hum, Project Officer

ERT Document No. P-7421

February 1980

Prepared for

U.S. ENVIRONMENTAL PROTECTION AGENCY
Region II
26 Federal Plaza
New York, NY 10007

Prepared by

Edward W. Fasci
Hector R. Diaz

ENVIRONMENTAL RESEARCH & TECHNOLOGY, INC.
696 Virginia Road, Concord, Massachusetts 01742

DISCLAIMER

This Final Report was furnished to the U.S. Environmental Protection Agency, Region II, by Environmental Research & Technology, Inc. (ERT), Concord, Massachusetts, in fulfillment of Contract No. 68-02-2542, Task Order 4. The opinions, findings, and conclusions expressed are those of the authors and not necessarily those of the Environmental Protection Agency or of cooperating agencies. Mention of company or product names is not to be considered as an endorsement by the Environmental Protection Agency.

ABSTRACT

This report presents the results of a training and monitoring operations program conducted in Puerto Rico by ERT in conjunction with the Puerto Rico Environmental Quality Board (EQB). Major components of this program consisted of the following:

a) Program definition and design;

b) Procurement and checkout of equipment and spare parts;

c) Design and implementation of a classroom and field training plan;

d) Network installation and start-up; and

e) Network operations.

A qualified English/Spanish-speaking instructor was provided by ERT for the duration of the program in Puerto Rico.

This program served the purpose of introducing EQB to the concept of continuous air monitoring. Prior to this program, the EQB monitoring network consisted of manual "wet chemistry" methods for the obtainment of ambient air quality data.

ACKNOWLEDGEMENT

We wish to express our appreciation to Mr. John Hum, Project Officer, Mr. Joseph Spatola and Mr. William Coakley, EPA Region II, for their guidance and assistance in the development and execution of this project. We would also like to thank members of the Puerto Rico Environmental Quality Board for their cooperation.

Finally, we express our gratitude to all members of the ERT staff who worked on the various phases of the project. Major contributions were made by Mr. Alberto Costales, who was responsible for the development of the work plan and the execution of the initial phases, and Mr. Anthony Sacco, who provided invaluable expertise on the program instrumentation.

TABLE OF CONTENTS

DISCLAIMER

ABSTRACT

ACKNOWLEDGEMENT

LIST OF TABLES

1. INTRODUCTION

2. WORK ACCOMPLISHED

    2.1 Program Definition and Design

    2.2 Equipment and Spare Parts Procurement and Checkout

    2.3 Design and Implementation of a Training Program

    2.4 Network Installation and Startup

    2.5 Network Operations

    2.6 Management

3. CONCLUSIONS AND RECOMMENDATIONS

APPENDICES

    A - Site Selection Trip Report

    B - Quality Assurance Program Plan

    C - Training Program Plan

    D - Level I Training Manual

    E - Level II Training Manual

    F - Data Services Training Manual

    G - Audit Report

LIST OF TABLES

Table

1 Operational Monitoring Network

2 Field Operations Schedule

1. INTRODUCTION

To obtain an accurate data base for determining the attainment status of several national ambient air quality standards in Puerto Rico, the Environmental Protection Agency (EPA), Region II Office, initiated a long-term program to convert the manual sampling network in the island to an automated continuous network. As a first step toward this ultimate goal, EPA hired Environmental Research & Technology, Inc. (ERT) to design and implement a training and monitoring operations program in Puerto Rico. The ERT program was coordinated with the Puerto Rico Environmental Quality Board (EQB) in all phases of development and implementation.

Major components of the ERT program consisted of the following:

a) Program definition and design,

b) Procurement and checkout of equipment and spare parts,

c) Design and implementation of a classroom and field training plan,

d) Network installation and start-ups, and

e) Network operations.

The configuration of the operational monitoring network for which ERT was responsible is shown in Table 1. ERT was also responsible for installaing two new monitoring sites for total suspended particulates (TSP) in Guanica and Guayama; however, it was not responsible for the operation and maintenance of these TSP sites.

2. WORK ACCOMPLISHED

2.1 Program Definition and Design

In December 1978, ERT completed a preliminary work plan with inputs from EPA and EQB. This work plan was supplemented by the site selection and feasibility study conducted by ERT in January 1979 at Puerto Rico (refer to Appendix A).

During March 1979, ERT developed the Quality Assurance Program (refer to Appendix B) under guidelines set forth by its Quality Assurance Officer. It included Standard Operating Procedures specifically applicable to this training program.

2.2 Procurement and Checkout of Equipment and Spare Parts

EPA/EQB provided the air monitoring instrumentation that was installed in the network. ERT was responsible for providing the necessary spare parts and supplies necessary to maintain the network's instrumentation. This included tools, test equipment, spare P.C. boards, lamps, fuses, etc., plus other expendables such as strip chart papers.

Additionally, five new Ekto shelters complete with sample manifold air conditioner, heater, and instrumentation rack with electrical wiring were provided, as well as all materials needed to refurbish the San Juan #9 site (including a new air conditioner) were provided and installed.

Due to EQB's lack of an adequate inventory of spare parts, ERT had to provide a working sock of fittings, Teflon tubing, tape, and other associated hardware as well as a modest supply of electronic components. Additional spare parts had to be provided when the very poor condition of the EQB supplied equipment was noted (especially the Meloy CS-10 calibrators).

Out-of-scope equipment that was provided by ERT included special protective cages for the air conditioners as well as a replacement for the air conditioner stolen from the Catano site.

2.3 Design and Implementation of a Classroom and Field Training Plan

ERT was responsible for the design and implementation of a training program for the following instrumentation:

a) Thermo Electron Model 43 Pulsed Fluorescent SO_2 Analyzer

b) Meloy Model CS-10 Permeation Tube SO_2 Calibrator

c) Thermo Electron Model 143 Permeation Tube SO_2 Calibrator

d) Dasibi Model 1003 PC O_3 Monitor

e) Bendix Model 8501-SCA CO Analyzer

f) Esterline Angus MS401 Recorders

The training was divided into two phases: classroom training and on-the-job training.

There were two different classroom training programs: Level 1 and Level 2. Level 1 consisted of training in all aspects of operations, maintenance, calibration, troubleshooting, and repairs for the instrumentation listed in above. It was a three-week classroom training program. Personnel attending Level 1 training were divided into two groups, and two continuous three-week sessions were held. Level 2 consisted only of the operation and routine maintenance of the instruments listed above, and classroom training lasted one week.

ERT was responsible for providing one qualified English/Spanish speaking instructor for the duration of the training. For this purpose, Mr. Hector Diaz was hired as ERT's Field Instructor.

In February 1979, ERT developed the EQB Training Program Plan (refer to Appendix C). This document spelled out in detail the scope of the training provided, the applicable documentation, the expected level of preparation of EQB's personnel prior to the training program, administration of the training program, and the training schedule.

The materials produced for the training program included:

1) A Level 1 training manual (refer to Appendix D) which, along with an introduction to Ambient Air Monitoring Techniques, included prepared class notes for the classroom training, consisting of four colored reproductions of flow diagrams, electronic signal processing, observed waveforms, and electronic schematics;

2) A Level 2 training manual (refer to Appendix E) similar to the Level 1 manual but aimed at field operators instead of technicians;

3) A 35mm color slide presentation of instrumentation overhaul, calibration, operation, and troubleshooting;

4) Approximately 100 transparencies (many of them in four colors) for overhead projection use in the classroom presentations; and

5) Manufacturer's manuals for each of the instruments involved in the program.

During the week ending on May 6, 1979, the one-week level II training was held. A total of 15 students completed the course. The EQB personnel attending the training were remarkably cooperative and eager to learn.

In our opinion the pre-test administered on the first day of the course predicted fairly well the students' performance on the course. The students did show a tremendous interest on the discussed materials and showed a marked improvement in their understanding of basics of ambient air monitoring program as the course went on. Two short exams plus one final exam were administered, and all but one of the students earned passing grades.

During the three weeks spanning the time period between May 7 and May 25, the first session of the advanced Level I classroom training was held. A total of six students completed the course. The students were the EQB quality assurance officer, the supervisor of the EQB electronics lab and three electronics technicians who report to him, and an engineer

reporting to the EQB Air Quality Engineering and Permits Division. They had all successfully completed the prerequisite Level II training. Following the pattern established for the Level II training, these students were remarkably cooperative and devoted to absorb the material covered.

Since these students had some degree of familiarity with continuous air monitoring techniques, the basic material for the course was thoroughly covered, and the instructor was able to enter into more detailed discussions regarding air monitoring instrumentation and methodologies than had originally been planned. For example, upon request by the students, a half day of instruction was devoted to a discussion on digital solid state electronics in order to achieve a fuller understanding of the Dasibi theory of operation.

Based upon their performance in this course, we are confident that they will be able to provide EQB with in-house technical support vital to the successful operation of an ambient air monitoring network.

On June 18 the second session of the Level 1 classroom training was completed. A total of five students attended the course. Four of the students were field operators and technicians, and the fifth was the Director for EQB's air quality monitoring operations. As it was the case for students who attended the first session, all of the students had successfully completed the prerequisite Level 2 introductory course. Unlike the first group of students, however, these students had no extensive background in electronics. Nevertheless, we were able to cover all of the assigned materials.

The students showed a lot of interest in the course and performed well in written exams and in laboratory workshops. They had the opportunity to perform actual multipoint calibrations and demonstrated their ability to follow proper procedures.

On May 29, on-the-job training (OJT) was started for the first group of graduates from the Level 1 training. It included the repair and overhaul of Meloy CS-10 calibrators, inspection of Teco 43's and 143's, and mass flow meter calibrations.

From July 23 to August 1 the four Teco 43 instruments underwent multipoint calibrations at the EQB lab as part of the OJT. Two problems were encountered: (1) the Teco 143 calibrator had to be reconfigured electronically to run at 30°C (for NBS permeation tubes) rather than at 35°C, the temperature at which the unit came certified; (2) since the

air conditioners were turned off during weekends and holidays, the temperature in the lab climbed up to 89°F causing permeation tube calibrators to become unstable.

The transition from OJT to the point where EQB personnel were running the network by themselves (under the instruction of H. Diaz) was a very gradual one. OJT covered two main areas: the laboratory work (repairs, overhaul, multipoint calibrations, etc.) and field work (operations, calibration checks, audits, etc.). EQB personnel assigned to each of these tasks had the opportunity to work alongside the ERT Field Instructor until they became proficient enough to work solo.

During the period of August 13-16, three staff members of EQB attended a training session at our Concord facility on data validation procedures. ERT requested that a take-home exam be completed and returned to our records. A data validation manual was handed out to them (refer to Appendix F). The performance of these students was commendable.

In addition to the instrument and data validation training programs, EQB personnel (other than those responsible for the network operations) were trained in conducting monthly audits in accordance with 40 CFR 58.

2.4 Network Installation and Start-up

Per the contractual agreement, ERT was responsible for the installation of the network equipment described in Table 1.

In July 1979, John Wilbur (ERT) and Steve Zarach (ERT) traveled to Puerto Rico for the installation. From June 25 to July 20 the installation of the shelters took place. Personnel of the EQB installed fencing provided by ERT and cooperated in the setting up of the shelters.

On July 19 the air conditioning unit of the Catano site was reported stolen, and the police were notified of the incident on July 20. To avoid a recurrence of this incident, the EPA Project Officer authorized the ordering of protective cages for the six air conditioners used at the continuous monitoring sites.

On July 31, a Bendix CO monitor was installed on the San Juan site. It was calibrated by EQB personnel on August 1, and began collecting data on August 3.

Although the five new shelters installed for the project were on site since July 20, EQB was only able to provide electrical power to one of them by early August, the Bayamon site. The instrumentation for this station along with the air conditioning unit was promptly installed on August 2.

The Guaynabo site was finally powered on Friday, August 10; monitoring began on August 15.

The Guayama site was powered on August 17; the instrumentation was installed and operations commenced on August 23.

The Toa Baja station was powered in mid-September. The start-up was delayed until the security cage for the air conditioning unit was installed. The security cages arrived at EQB on September 14 and were installed in all new shelters by September 21. The Toa Baja site became operational September 28.

Since the EQB was unable to get power to the Catano site, they decided to relocate it. After evaluating several alternate sites, the shelter was moved to Levittown. The instruments were installed and operations commenced on October 15. This completed the start-up of all monitoring sites.

Although the disposition of EQB personnel was very good, the installation project was plagued with delays because of the lack of adequate means of transportation at EQB.

2.5 Network Operations

As stated before, the transition from OJT to the point where EQB personnel were actually operating the stations on their own under ERT instruction was very gradual. This was compounded by the delays encountered in the installations. Mr. Hector Diaz of ERT acted as Field Instructor for EQB and provided consulting services to the EQB air monitoring staff. Whenever required, ERT provided transportation to the EQB field personnel. All sites listed in Table 1 were visited at least twice weekly as per the schedule in Table 2.

ERT was responsible for digitizing all data collected during the operational phase of the project and returning it to EQB for validation.

At the end of the project, all stations were collecting data properly. This was confirmed by a series of independent audits and conducted by ERT on the period of October 15-19. The results are discussed in Appendix G.

3. CONCLUSIONS AND RECOMMENDATIONS

ERT is pleased to state that the program's objectives were met, and this statement is shared by EQB and EPA as well. Such was the conclusion reached at the final program review meeting held at EQB on November 1, 1979. At the end of the program, all six air monitoring stations were operating well and were being attended by EQB personnel with sufficient frequency. The audit results indicate that the analyzers were operating well. Of utmost relevance is that the EQB personnel demonstrated their ability to run a continuous air monitoring network of the highest caliber.

Although the EQB continuous air monitoring program has started well, there are several areas that indicated potential problems:

Technical Matters

- Most of the sites suffer from some form of moisture condensation within the inlet probe system. At some sites there was water all through the inlet line to the instrument, even on the particulate filter. There are several suggested actions which can alleviate this problem. The simplest action requires careful wrapping of all inlet lines with an insulating material. In conjunction with this, the shelter thermostate may be raised slightly so taht the environmental temperature is above the dew point most of the time. This can be tricky where a calibrator such as the TECO 143 Permeation System is used, since it employes a 30°C over and requires a Delta T of 5°C to operate efficiently. If these things fail to solve the condensation, it may be necessary to shorten the inlet Teflon probe leading to the glass manifold so that there is a minimum length of sample probe inside the shelter.

- Because of frequent power failures, the monitoring data records do not show specific temporal correlations. To correct this problem, EQB and EPA should consider the use of rechargeable power packs with the strip-chart recorders.

- Span checks are performed on a weekly basis. If there is a problem where an analyzer span is found out of tolerance, a week of data may be invalidated. Each of the SO_2 analyzers is equipped with the necessary valves to accommodate an automatic zero and span cycle. The expense associated with implementing auto zero/span cycles requires the purchase of timers and relays. The cost is probably less than $200 per unit, and it improves the potential for quality data.

- The Air Quality Electronic Instrumentation Laboratory should be in an independent room with its own air conditioning units and be provided with adequate benches and instrument racks. It is important that the lab calibration facilities be kept under a controlled atmosphere in order to avoid problems of instruments going out of calibration due to loss of air conditioning on weekends and holidays. There was also a noteworthy lack of tools and other spare parts that one would take for granted in such a lab such as fittings, tie-wraps, tape, tubing, etc.

- The current operation is adequately serviced without laboratory calibration standards, but in the near future the expanded network will require at least a standard for SO_2.

Managerial Matters

- EQB needs to designate an individual to take over those functions that were up to now being performed by Mr. Hector Diaz.

- Since the equipment in this network is relatively new, there has not been much problem with spare parts, but indications are that this could be a significant problem in the future. A complete stock of spare components (a one-year supply) should be made available and updated as used.

- The problem of personnel turnover within the EQB is the largest single factor which could be a determinant to the continued efficient operation of this network. It is not sufficient to rely upon existing technicians to train new people since this tends to dilute the effort after a period of time. A comprehensive training program must be established either by outside contract or by using EQB people who are expressly trained for this task.

- Although there is a Quality Assurance Program associated with this network, it was devised as a guideline document, and EQB is under no obligation to implement it. This plan does not include all areas of concern in this network, specifically high-volume samplers, etc. EQB should either adopt/modify the current plan or develop a plan.

- The Quality Assurance Program developed by ERT for this project addresses many of the critical issues on data accuracy and precision. Therefore, it should serve as the basis for the comprehensive Quality Assurance Plan which EQB must submit to EPA as specified in 40 CFR 58.

- Although there is not much data to validate as yet, there seems to be a lack of staff for this function. At the present time there is only one person actively involved in this task. There is a requirement for at least a meteorologist to validate data.

- Documentation at the sites is adequately performed, but the mechanics of this phase of the operation is cumbersome. The daily log sheets and assessment sheets are completed with an original and two loose carbon copies. The forms should be printed on multiple NCR stack for more convenience. There is also no convenient filing place for those forms at each site. It would be advisable to start a three-ring binder for this purpose at each site where all documentation including calibration sheets could be easily stored.

TABLE 1

OPERATIONAL MONIOTRING NETWORK

New Sites	Parameter	Instrument	Calibrator
Guayama (#15)* School yard of Puerto Jobos School	SO_2	Teco 43	Meloy CS-10
Existing Sites			
Guaynabo (#7)* Grounds of the USGS Building	SO_2	Teco 43	Meloy CS-10
Bayamon (#19)* Grounds of Sierra Bayamon Public School	SO_2	Teco 43	Meloy CS-10
Catano+ (#5)* Grounds of Iglesia del Nazareno Church in Las Vegas	SO_2	Teco 43	Meloy CS-10
San Juan (#9)** Grounds of PRIDCO Building	CO	Bendix 8501-5BA	CO in cylinders
Toa Baja (#12)* Grounds of Villa Marisol School in Sabana Seca	O_3	Dasibi 1003	Dasibi 1003

*New shelters provided by ERT.

**Existing EQB shelter refurbished by ERT.

+The Catano shelter was relocated to Levittown, Toa Baja by EQB because of their inability to provide power at Catano.

ENVIRONMENTAL RESEARCH & TECHNOLOGY INC

TABLE 2

WEEKLY FIELD OPERATIONS SCHEDULE

Site	Monday	Tuesday	Wednesday	Thursday	Friday
Bayamon	1		2	3	
Guayama		1	2		3
Guaynabo	1		2	3	
Levittown	1		2	3	
San Juan		1	2		3
Toa Baja	1		2	3	

Key

1 - Status check of instrumentation system

2 - Maintenance of shelters and groundskeeping as needed

3 - Calibration or precision checks of monitors

Appendix A
to the Final Report

Site Selection Report

ENVIRONMENTAL RESEARCH & TECHNOLOGY, INC.
696 VIRGINIA ROAD, CONCORD, MASSACHUSETTS 01742, (617) 369-8910, 489-3750, TELEX: 923 335 ENVIRORES CNCM CABLE: ERTCON

REF: PM-7112

ERT Program No. P-7421

January 29, 1979

Mr. John Hum
U.S. Environmental Protection Agency-Region II
Air Programs Branch
26 Federal Plaza
New York, New York 10007

Dear John:

Enclosed please find a copy of the revised trip report by John Wilbur on Site Selection and Feasibility Study for EPA sponsored EQB Monitoring Network in Puerto Rico. The previous copy mailed to you on January 22, 1979 contained several errors and did not contain the attached plot plans. I would like to apologize for the errors and the ommission.

As we discussed on January 19, 1979, EPA will review this document and afterwards, a conference call will be held between EPA and ERT in order to finalize the requirements regarding the number and type of shelters to be used.

Please do not hesitate to call me if you should have any questions.

Very truly yours,

Alberto Costales
Senior Program Manager

AC/cmw

Attachment

cc: Casto Velasquez

Trip Report
Site Selection & Feasibility Study for the EPA Sponsored EQB Network

Personnel: John Wilbur

1/3/79 - Travel

3:30 p.m. Contacted Casto Velasquez of EPA in Puerto Rico, who in turn contacted Danny Pagan of EQB. Danny had not been informed that I would be coming and said that he could not arrange for someone from EQB to accompany me to the sites the following day.

I arranged to visit sites with Casto the following day, and he informed me that someone from EQB would be available on Friday. Our planned schedule was as follows:

1/4	Thursday	Guayama	(#15)
		San Juan	(#9)
1/5	Friday	Bayamon	(#19)
		Catano	(#5)
		Guaynabo	(#7)
		Toa Baja	(#12)

4:15 p.m. Tried to contact Al Costales, but the operator could not get the call through.

1/4/79 - 8:15 -
As I was unable to rent a vehicle, Casto picked me up at the hotel. We proceeeded to drive to Guayama (#15), approximately a two hour drive to the southern side of the island.

10:30 - Arrived at Guayama site (TSP & SO_2).There are three (3) options available at Guayama that are in close proximity to each other (REF. Plot Plan #15).

Option 1 - is located in front of an abandoned building owned by a man with the last name of Coras (Tel. # (809) 864-4795). This is a suitable site with close proximity to power and no obstructions in 3 wind directions. The existing building is ~15 ft. high at the peak and is about 40 ft. back from the road. The site is on a grade with the street lending itself to easy access. However, we were informed by a neighbor that the storm culvert adjoining the land sometimes overflows during the rainy season (May-July) and floods the land in Option 1 to a depth ranging ~ $\leq$1 ft.

Option 2 - This site is across the street from Option 1 in the Puente Jobos school yard. The recommended area is free from wind obstruction except for the single story school building located ~60' away and another 2 story building ~150' away. (REF. Plot Plan #15). In either case, the probe would be located a horizontal distance greater than twice the vertical height of the obstruction, thus satisfying applicable siting criteria. Electric power could be obtained from poles alongside the street.

There are two problems with Option 2. One is accessibility and the other is low ground elevation at the site. Regarding accessibility, a gate would have to be installed in the existing fence or a road built through the school yard from an existing entrance. Also, substantial fill (20-25 yds.) would have to be supplied at the site to be graded for shelter installation.

Option 3 This site is an almost trapezoidal shaped site with the edge bordering the street curved to the contour of the roadway. (REF. Plot Plan #15). The land area measures approximately to 10,000 ft.^{2} (approximate dimensions on plot plan) electric power could be easily obtained from existing power poles along the street.

The land is owned by Jose Pons (Tel. # (809) 864-2280) who owns an automobile dealership about 300 ft. before the site on Public Rd. #3. Casto and I spoke with an employee at the dealership and he indicated that there would probably be no problem obtaining a portion of the land for our purposes as the lot is vacant. The lot is fenced-in by a 8' chain link fence with barbed wire and a 20' gate at the southeast corner of the lot.

General There appears to be no problem obtaining electrical power for all three sites. Option #2, as stated earlier needs a substantial amount of landscaping before a shelter can be positioned there.

Fencing is needed at the following sites to prevent vandalism and theft of materials and equipment, and specifically:

Option 1 - No fence at site at present time.

Option 2 - Existing fence is old, broken in spots and encloses an area of ~ 300' x 300' around the two school buildings.

Option 3 - Existing fence encloses a large area ~ 100' x 100' and although land is not in use now, it may be at some future time, thus leaving the shelter and contents vulnerable.

Upon assessing all three options, Option 3 judged by the criteria aforementioned, appears to be the best site. Upon installation of the ERT it will meet the criteria specified in EPA 450/3-77-018 (June 1977) Selecting Sites for Monitoring TSP, EPA 450/3-77-013 (April 1977) Optimum Site Exposure Criteria for SO_2 Monitoring and 40 CFR 58 Appendices D&E. In reference to TSP siting, I did not have a copy of the modeling report and took a cursory examination and rough count of traffic on Public Road #3 and the site will be situated in accordance with aforementioned documents. (Note: Modeling report should be consulted previous to final siting.) The area of land at Option #3 more readily lends itself to such siting modifications if necessary.

The bad points of Option #1 are the proximity to the street, possible flooding (?), and the existing structure on site.

Option #2's bad points are the need for extensive landscaping and accessibility restrictions.

12:15 Contacted Al Costales and informed him of the need of traffic count on Public Rd. #3 for future reference.

1:30 Arrived at San Juan #9 Site (CO)

This is an existing site on Roosevelt Ave. in the Puerto Rico Industrial Development Co. lot. The existing shelter is a 20' Tandem wheeled trailer. The trailer is in need of repair and slight modification, but it would be more cost effective to do this than replace it with a new shelter. Also, security poses no additional problem as a sufficient fence is already in place.

Physical problems of the shelter at this site that should be rectified are:

1. Two of the sectional, louvered crank-out windows are broken, and the window on the door is broken.

2. No air conditioning and no thermostat (wall fan in use).
   Readings at time of visit: Temp. 86°F
   R.H. 50%

3. No lock on door.

4. Non Teflon lined inlet probe (existing comb. of polyethylene & Tygon).

5. Inlet probe does not meet probe siting criteria relative to height above ground, vertical distance and horizontal distance.

6. No exhaust configuration (could not evaluate, instrument not on site).

In addition to the physical problems of the shelter, there also appears to be a problem with the present location of the monitoring site. As specified in the appropriate criteria for CO monitoring (REF. EPA-450/3-75-077 Selecting Sites for Carbon Monoxide Monitoring and 40 CFR 58 App. D&E). The minimum separation distance from a roadway for a neighborhood CO monitor is 35 meters.* Again, I did not have a modeling report or traffic count so a final siting designation could be made.

If it is determined that the site should be moved back from its present position, which is 10 meters from the roadway, there is about 80' (27 meters) of space between the trailer and a tree (60' ht.) in the back corner of the lot (REF. Plot Plan #9).

1/5/79 - 8:15 a.m.

Casto and I went to EQB's office in San Juan to meet someone from EQB who would accompany us to the remaining sites. Personnel from EQB were Nelson Moreno and Israel Matos and a driver for the van.

*The only exception is if the site is classified as a street canyon type, i.e., street or open area <2 x building hts. This is not applicable at this site.

9:30 - Arrived at the Guyanabo (#7) site(SO_2) located on top of the U.S.G.S building off of the De Diego Expressway. A ladder was needed to climb in succession to the top of a steel high voltage cabinet and to the top of one rooftop where we finally climbed via an in-place angle iron ladder to the top of the building where the shelter was located. The shelter was a steel tool shed approximately 8'w x 6'l x 5'h in need of repair. The shelter was rusted and had holes in it in various places. It had to be braced and placed on a platform made of slotted steel to give it a little more structural rigidity. The wiring was frayed in some spots, and generally was in disorder; also, I did not observe any grounding provisions. There was a functional air conditioner; however, it was an old model that was dented in places and missing parts. The electrical socket in which the air conditioner was plugged-in had been pulled from the wall. With the holes in the walls and the negligible insulating effect inherent in such a shelter, this set-up would not maintain adequate temperature control for continuous sampler operation such as we will have. Also, because they only sample intermittently at this time there is no thermostat hook-up for the AC, which will be needed for continuous operation. The probe is similar to the one at the San Juan site. It is not lined with Teflon and apparently has never been cleaned.

This site has a conglomeration of bad aspects to it. It is difficult to gain access to, even worse if carrying equipment. The shelter is in a dilapidated condition, and the wiring is hazardous. Temperature control is ineffective, and in general, this site is not suitable accommodation for the type of continuous operation that we will have here.

In realizing this, an optional site was chosen behind the U.S.G.S. building (REF. Plot Plan #7). The site meets all of the appropriate siting criteria, and once a standard ERT shelter is deployed, it will automatically negate all of the bad aspects previously outlined.

The site is close to electric power and would be next to a fence; therefore, to save materials and time, one side of the site could use the existing fence while the other three sides of the security fence are positioned accordingly.

There is an existing PRWRA monitoring shelter (REF. Plot Plan #7) located west of the existing EQB site. If this shelter was moved to a suitable location $\approx$50 ft. south to comply with EPA siting criteria and properly outfitted with an air conditioner and sample probe, this may be an acceptable alternative to a new shelter. Arrangements will have to be made with PRWRA to make use of their shelter.

10:15 - Arrived at Catano (#5) site (SO_2) located on top of the Isaac Del Rosario School.

This site is similar to Guaynabo in that it is located on a rooftop and uses the same type of shelter. Access to this site is made by carrying a ladder to the second floor of one of the school buildings, placing it onto the roof of the adjoining school building and ducking between a 3 1/2 ft. space between the overlapping roofs of the two buildings. Again this is a dangerous situation, and one that would be difficult to maneuver with equipment to carry. Once on top of the roof, the same situation prevails

as at Guaynabo. The steel shelter at this site is also rusted, full of holes, dangerously wired and ungrounded, and structurally unsound. The air conditioner at this site does not work and is beyond repair. The shelter also has the same unacceptable air sample inlet probe as at Guaynabo and San Juan. Another dangerous situation that exists is the hazardous wiring of a Hi-vol on the roof with the existing shelter. Although rectifying this condition is not under ERT's jurisdiction, it is an important safety factor involved in assessing the site. Therfore, judging this site unacceptable, another site was chosen in the church yard next to the school (REF. Plot Plan #5). The existing fence with barbed wire could serve as one side of the site's security fence.

Note: There appeared to be some construction (ground clearing) done previously next to the church yard. Rumor says that there may be a supermarket being built there. If so, the site may have to be re-located.

11:15 - Arrived at Toa Baja (#12) (SO2) site at a school bordering Calle Rd. This site is also located on top of the building (2 story). The gates were locked and we could not gain access to the building to climb to the roof. However, the conditions of the shelter as seen from the ground and as told by Israel Matos and Nelson Moreno were the same as at Catano (#5), i.e. - old shelter, no air conditioner, etc. We then proceeded to the site that had been discussed at our previous meeting and site visits on October 20, 1978. This site is located at the Centro Educativo Y Trabajo building, (Sabana Seca-Toa Baja). It already has a fence that would be sufficient security for that site and electric power is nearby.

On our last visit to the Toa Baja site in October, John Hum raised questions as to the suitability of the site due to its location between two mountains (REF. Plot Plan #12). Therefore, we visited another site at the Villa Marisol School on St. #2. This site is approximately 3/4 to 1 mile away from the existing Toa Baja site. Electric power is nearby and the site meets appropriate EPA siting criteria. However, we will need approval from John Hum, through the use of modeling to use this site. If this site is used, a fence will have to be erected around the shelter.

12:00 - Arrived at Bayamon (#19) site (SO2) at the Santos Sepulveda School.

We could not gain access to the shelter on the roof (2 story) because the building was locked up. Again, this shleter is the same as Catano and Toa Baja, as I could see from the ground and as I was told. A site was selected in the side yard of the school next to a fence (REF. Plot Plan #19). Again we can use the existing fence for one side of the security fence and possible two if barbed wire can be placed on top of one fence for 20 ft. (See Plot Plan)

Conclusion

In general, after visiting all of the existing sites, I strongly recommend new shelters,* along with the new locations I have specified. The need for new shelters could be summarized as follows:

1. In order to prevent wide temperature fluctuations which could affect instrument performance.

2. In order to prevent water leakage which could damage the instruments or cause electrical damage.

3. As a safety measure in order to remedy the extremely poor wiring found at all sites.

4. In order to remedy the inadequate sampling manifold systems.

5. In order to improve the structural integrity of the shelters.

6. In order to provide enough room for an individual to perform tests, maintenance, and calibration. The height of the existing sites and the width do not allow for a person to perform any work while standing up. In the process of performing multipoint calibrations and conducting on-the-job training, when several people are expected to be in the shelters for several hours, the existing shelters cannot be considered as adequate.

Replacement of the shelters would be in the best interest of running an efficient program and in order to avoid the problems we will surely encounter if we work within the existing conditions.

*Except at San Juan where existing shelter could be reconditioned.

ENVIRONMENTAL RESEARCH & TECHNOLOGY, INC

Title	Date	Dwg.	Project	Proposal
PHOT PLAN #15	1/10/79	1.1.1	7471	

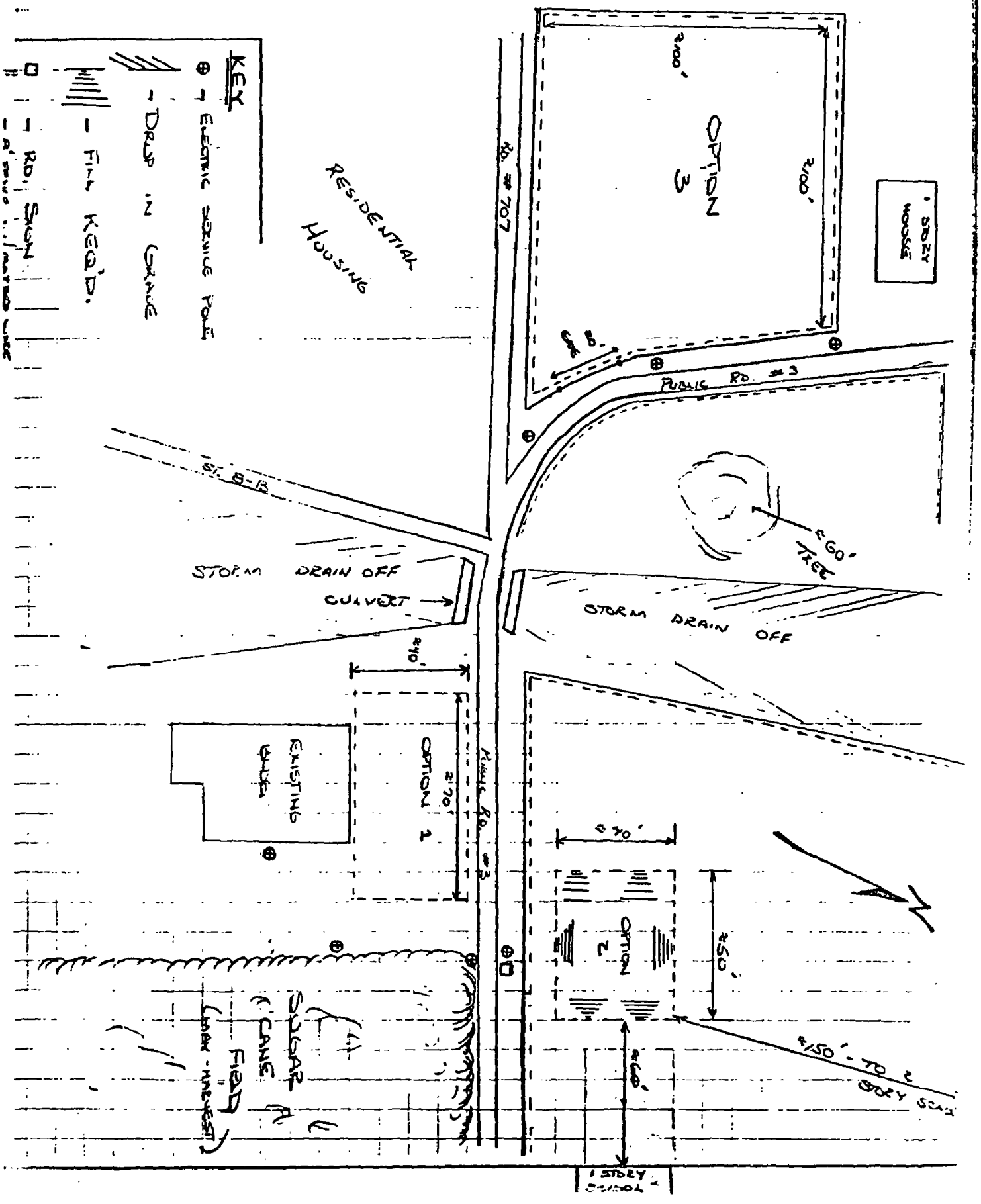

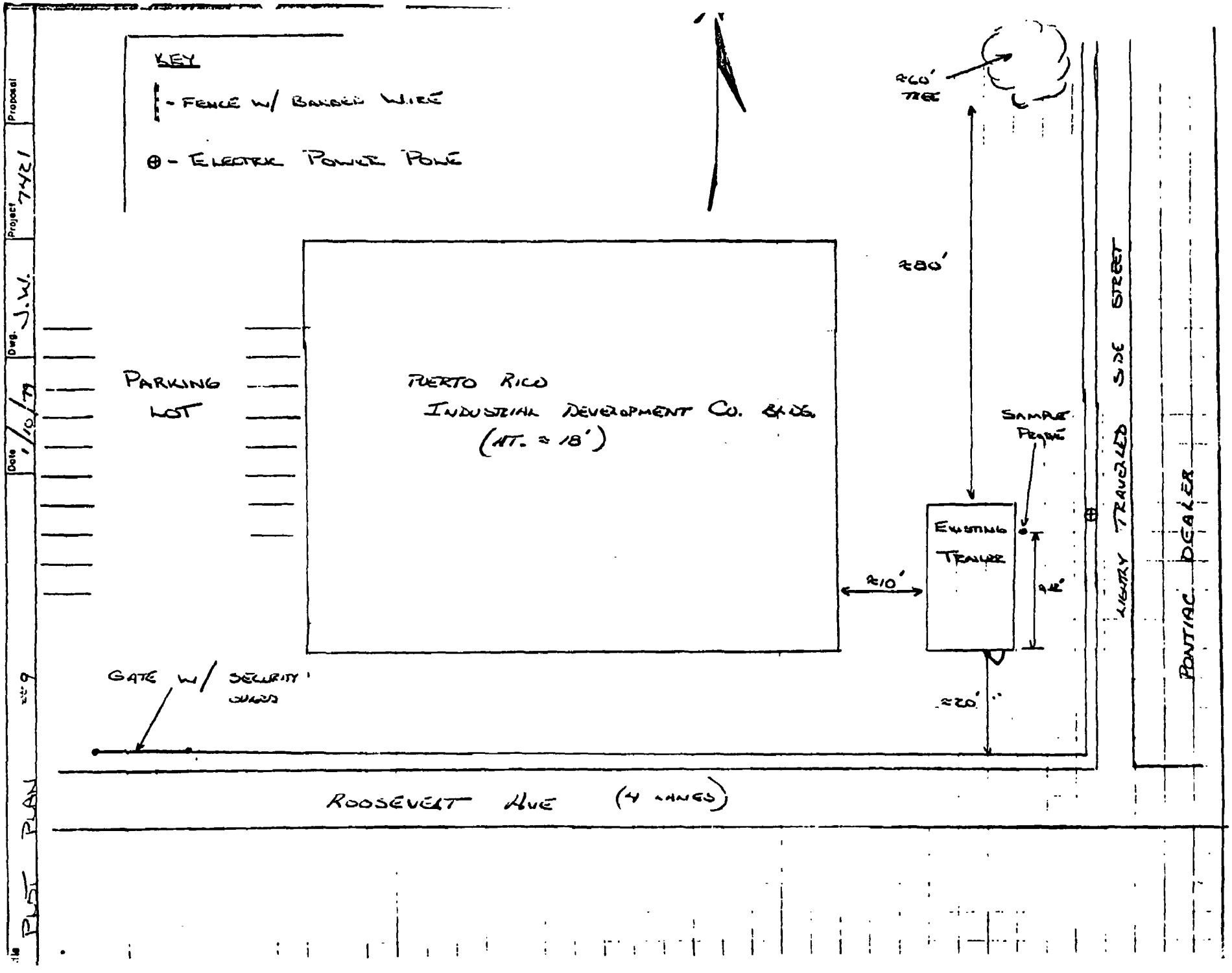
KEY
- FENCE W/ BARBED WIRE
⊕ - ELECTRIC POWER POLE
≈60' TREE
≈80'
PARKING LOT
PUERTO RICO INDUSTRIAL DEVELOPMENT CO. BLDG. (HT. ≈ 18')
SAMPLE PROBE
EXISTING TRAILER
≈10'
≈20'
GATE W/ SECURITY GUARDS
HENRY TRAVERLED SIDE STREET
PONTIAC DEALER
ROOSEVELT AVE (4 LANES)
PLOT PLAN
Proposal
Project 7421
Dwg. J.W.
Date 1/10/79
ENVIRONMENTAL RESEARCH & TECHNOLOGY, INC.

ENVIRONMENTAL RESEARCH & TECHNOLOGY, INC

PLOT PLAN #19	Date 1/10/79	Dwg. J.W.	Project 7421	Proposal

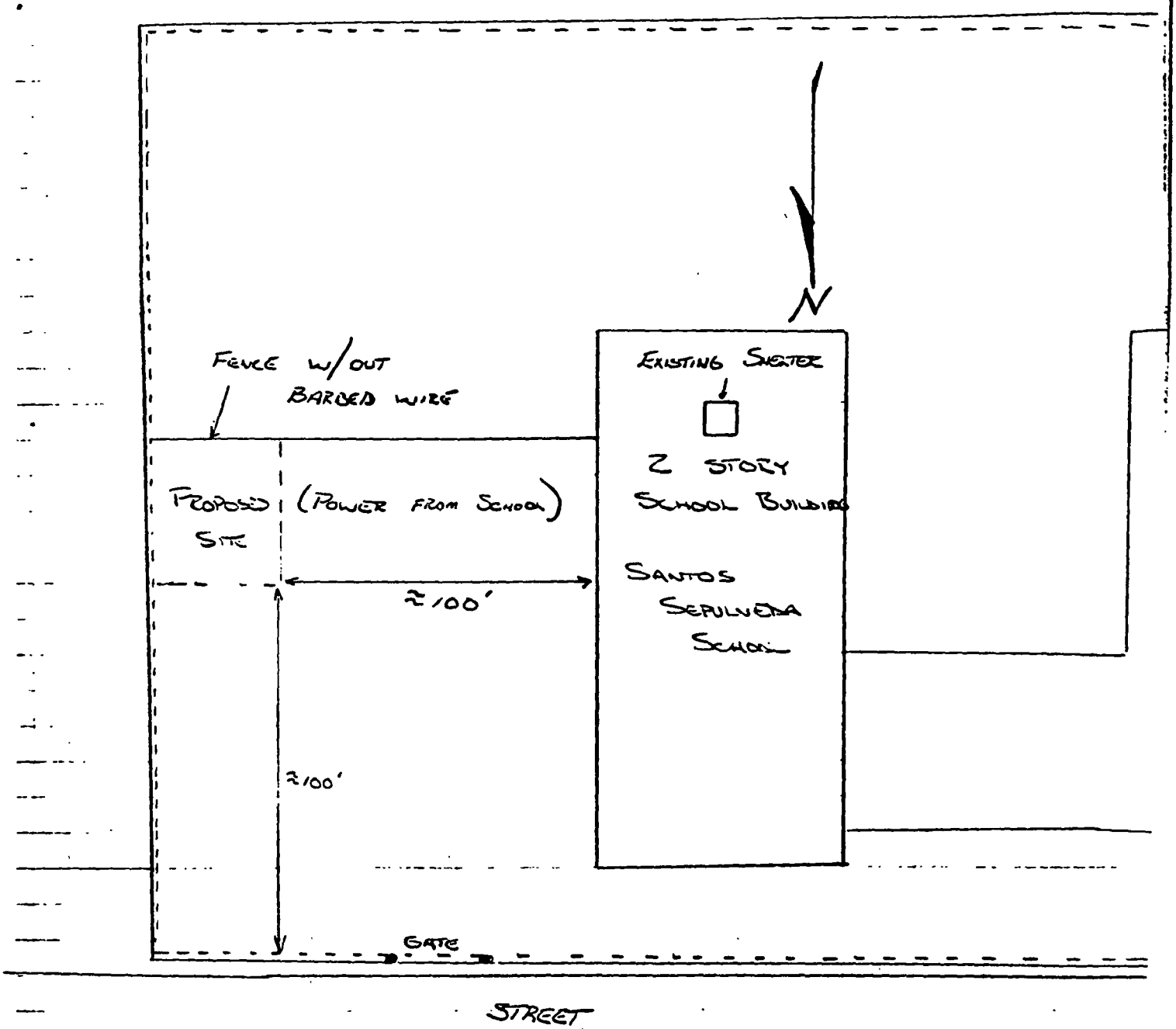

KEY

- FENCE W/ BARBED WIRE

ENVIRONMENTAL RESEARCH & TECHNOLOGY, INC.

Title	Date	Dwg.	Project	Proposal
PLOT PLAN #5	1/10/79	J.W.	7421	

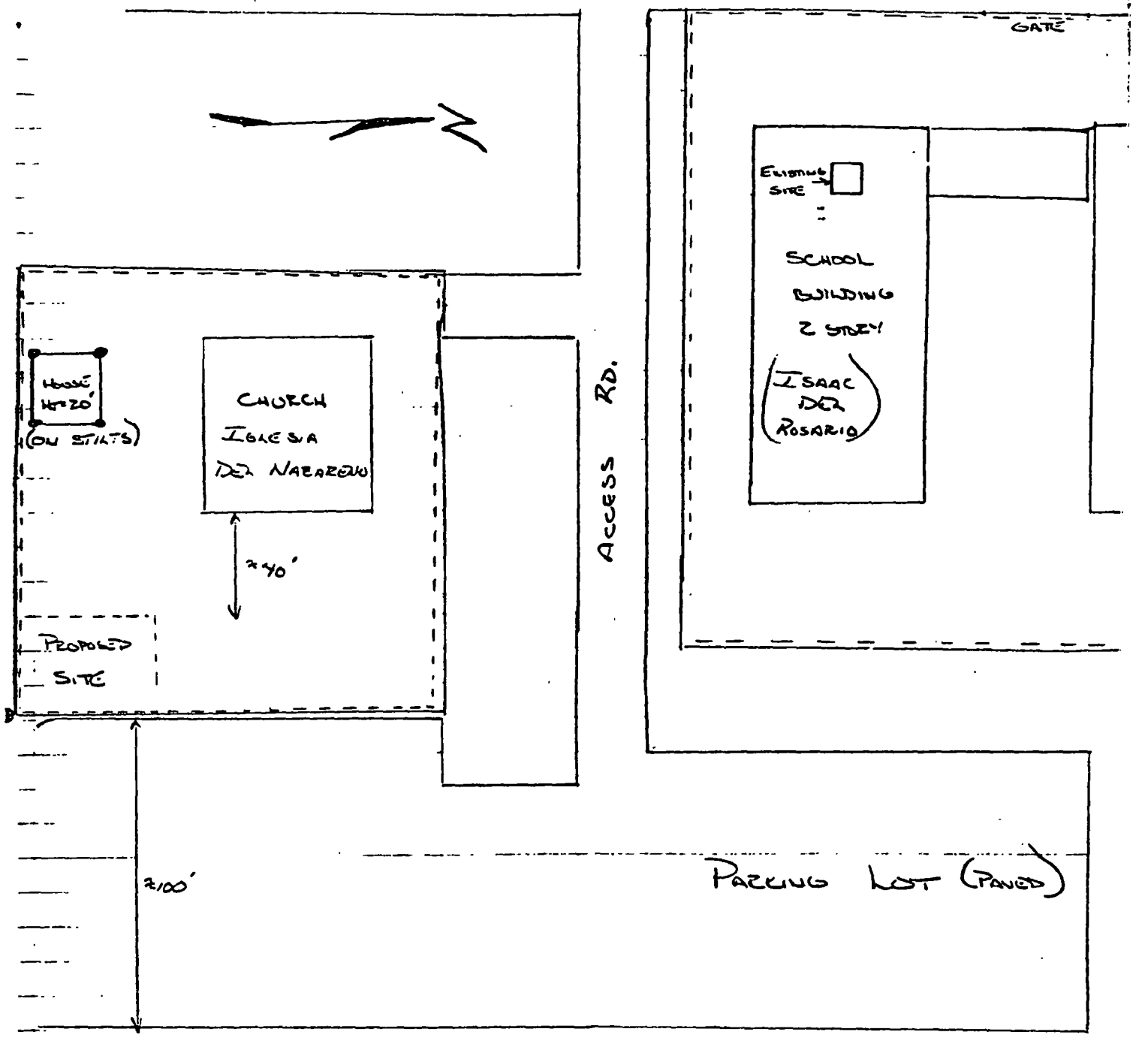

ENVIRONMENTAL RESEARCH & TECHNOLOGY, INC

Title: PLOT PLAN #7	Date: 1/10/79	Dwg. J.W.	Project 7421	Proposal	

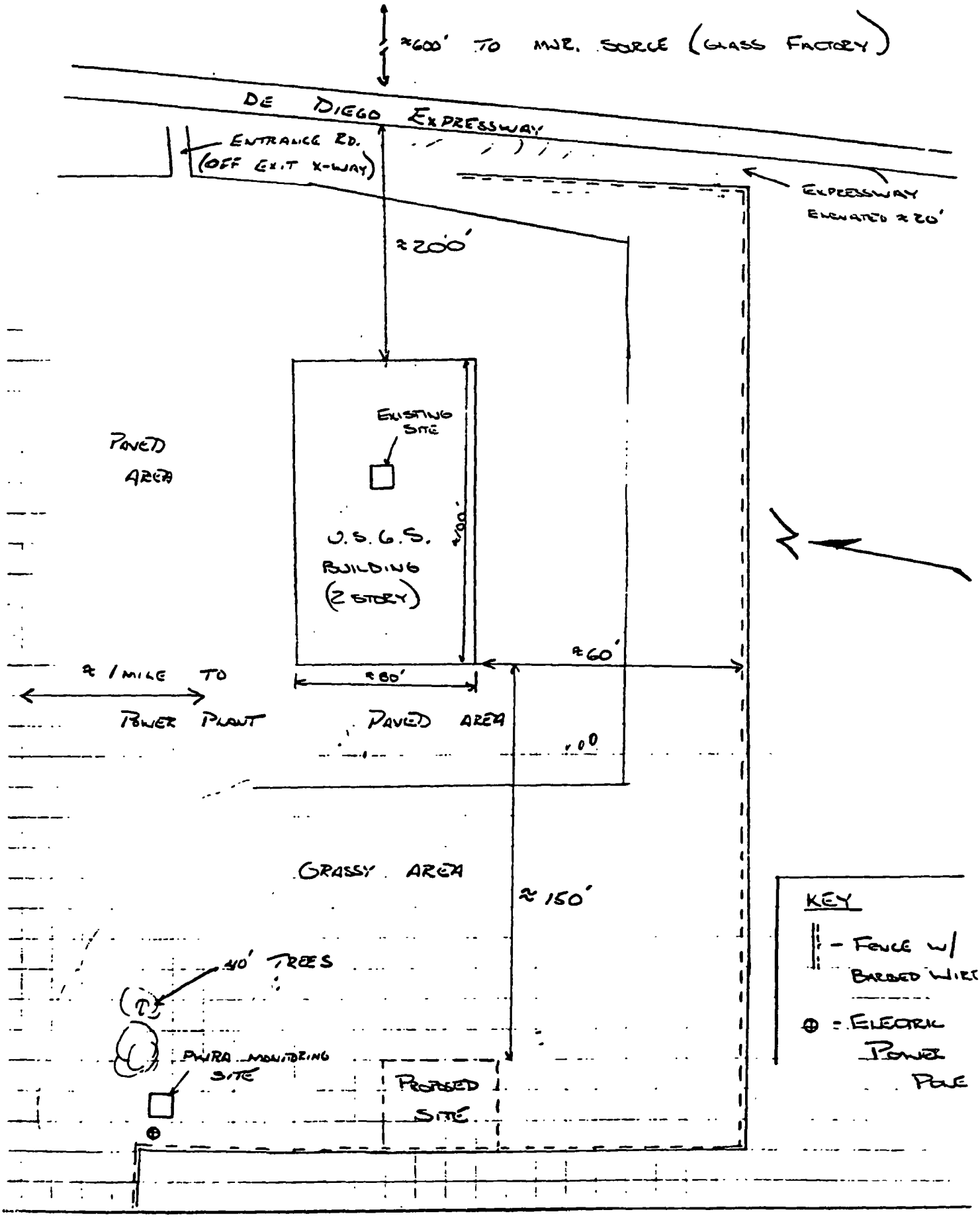

ENVIRONMENTAL RESEARCH & TECHNOLOGY, INC

Title	Date	Dwg.	Project	Proposal
PLOT PLAN #12	1/10/79	J.W.	7421	

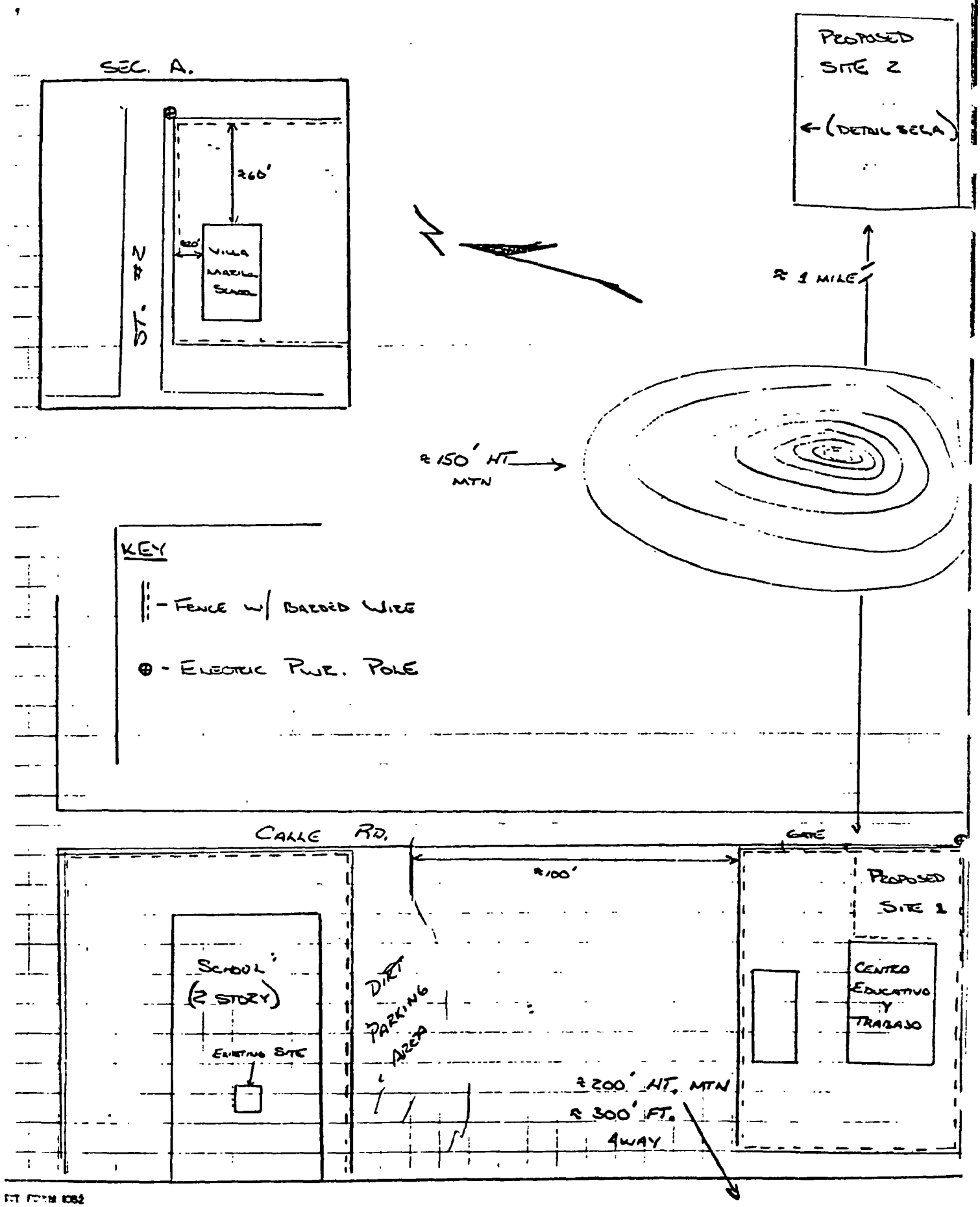

ET FORM 1082

Appendix B
to the Final Report

Quality Assurance Program Plan

ENVIRONMENTAL MONITORING PROGRAM

Prepared for the

PUERTO RICO ENVIRONMENTAL QUALITY BOARD

by

ENVIRONMENTAL RESEARCH AND TECHNOLOGY

-QUALITY ASSURANCE PROGRAM PLAN-

April, 1979

USEPA-BOA #68-02-2542

TABLE OF CONTENTS

		Page
1.	INTRODUCTION	1-1
	1.1 Purpose	1-1
	1.2 Project Goals	1-2
	1.3 Applicable Documentation	1-2
	1.4 Program Organization	1-2
2.	MONITORING PROGRAM	2-1
	2.1 Monitoring System Description	2-1
	2.2 Project Organization	2-1
3.	QUALITY ASSURANCE ORGANIZATION	3-1
4.	QUALITY ASSURANCE STANDARDS AND INSPECTIONS	4-1
	4.1 Control of Purchased Material Equipment and Services	4-1
	4.2 Calibration of Measuring Equipment	4-3
	4.3 Document Control	4-3
	4.4 Auditing and Corrective Action	4-3
5.	QUALITY ASSURANCE RECORDS AND REPORTING	5-1
	5.1 Quality Assurance Records	5-1
	5.2 Corrective Action Request Procedures	5-1
6.	ACCEPTANCE	6-1
APPENDIX A	TECHNICAL BULLETINS ON AIR MONITORING INSTRUMENTATION	
APPENDIX B	FIELD OPERATIONS SOPs	
APPENDIX C	ELECTRONIC LAB SOPs	
APPENDIX D	SCIENTIFIC INVENTORIES AND REPORTS DIVISION SOPs	
APPENDIX E	AUDITS SOPs	
APPENDIX F	CORPORATE STATEMENT OF QUALITY ASSURANCE POLICY AND ORGANIZATION	

LIST OF TABLES

Table		Page
1-1	Organizations and Related Areas of Responsibility	1-3
2-1	Operational Monitoring Network	2-2
2-2	EPA Designation Numbers for Air Quality Monitors	2-3
2-3	SOPs Governing Project Organization	2-5
2-4	Air Quality Monitoring Equipment Calibration and Maintenance Schedule	2-6

1. INTRODUCTION

1.1 Purpose

This Quality Assurance (QA) Program Plan describes the quality assurance requirements applicable to the ambient air quality data acquisition and reduction activities of the Environmental Quality Board (EQB) for the six-site monitoring network described in this document. It has been developed by Environmental Research and Technology, Inc. (ERT) under the Environmental Protection Agency's (EPA) Contract No. 68-02-2542, and is specific to the above mentioned network.

This plan covers both the data acquisition and data reduction phases of the program. It is intended to tie together in one document all of the QA program elements and reference documentation forming the work system for this project. The purpose of the information contained herein is to describe standards and procedures for installing, operating, and maintaining the systems so that the acquired data will be collected in a uniform manner and will be accurate. This plan also delineates the areas of responsibility, authority, and the lines of communication between the parties associated with this program. Once approved by EPA and ERT, this document will become a revision controlled document and will be delegated to EQB. All project personnel are governed by this document; they must have access to it and demonstrate an understanding of the portions controlling their work. The following individuals will receive copies of this plan:

Name	Organization
John Hum	EPA
Tom Williams	EPA
Charles J. Foster	EPA
Juan Merced, Director, Air Quality Bureau	EQB
Luis Matos, Technical Advisor to the Director, Air Quality Bureau	EQB
Israel Matos, Quality Assurance Officer	EQB

1.2 Project Goals

The goal of the QA Program Plan (QA Plan) is to document the manner in which EQB will ensure that the ambient air monitoring network will generate a valid data base to determine local compliance with the National Air Ambient Quality Standards (NAAQS). These data will also be used for the management of Prevention of Significant Deterioration (PSD) programs.

1.3 Applicable Documentation

The program as operated by EQB will be governed by three sources of documentation. The documents listed below form part of this QA plan and are referenced in this document. This triad consists of Purchase Order, State Implementation Plan (SIP), and QA Plan.

1.3.1 Environmental Protection Agency Purchase Order 68-02-2542

This document governs the technical approach and scope of the overall program and incorporates ERT Work Plan dated December 22, 1978.

1.3.2 Puerto Rico State Implementation Plan

This document is the basis for all of EQB's data acquisition and quality assurance needs. It includes the Regulation for the Control of Atmospheric Pollution and applicable Federal Regulations.

1.3.3 Quality Assurance Program Plan

This document (contained herein) describes the Quality Assurance Program to be carried out for this network.

1.4 Program Organization

The initial implementation of the monitoring program is the responsibility of ERT under contract to EPA and will be delegated to EQB once the training portion of the project is completed. The areas of responsibility are delineated and the responsible organizations are identified in Table 1-1.

TABLE 1-1

ORGANIZATIONS AND RELATED AREAS OF RESPONSIBILITY

ERT*

- Design and site selection of the monitoring network (Jointly with EPA).
- Site preparation.
- Installation of monitoring instrumentation.

EPA/EQB

- Design and site selection of the monitoring network.
- Purchase of monitoring instrumentation.
- Implementation of QA program.
- Data acquisition and validation.

*As per EPA contract No. 68-02-2542

2. MONITORING PROGRAM

2.1 Monitoring System Description

The air quality monitoring network covered by this QA plan consists of six ambient monitoring stations. Table 2-1 identifies each and lists the general nature of monitoring at each station.

2.1.1 Monitoring Site Selection

The air quality monitoring sites were selected on the basis of the following guidelines by EPA jointly with ERT:

1) Selecting Sites for Carbon Monoxide Monitoring, EPA-450/3-75-077

2) Site Selection for the Monitoring of Photochemical Air Pollutants, EPA-450/3-78-013

3) Optimum Site Exposure Criteria for SO_2 Monitoring, EPA-450/3-78-013

4) 40 CFR 58, Appendices D and E

2.1.2 Air Quality Instrumentation Selection

The instruments were selected to meet the EPA equivalency requirements for air quality monitors, where applicable. The air quality instruments selected are described in technical bulletins in Appendix A of this plan. Table 2-2 lists the EPA equivalency test report numbers for the aforementioned instruments.

2.2 Project Organization

This project is organized into three operational areas. Each of these operations, as described below, will perform its activity in accordance with the Standard Operating Procedures (SOPs) applicable to their tasks as described below. The EQB Quality Assurance Officer is responsible for 'fine tuning' and continuously updating the SOPs described below to the needs of the Board's monitoring activities as required by applicable regulatory constraints.

TABLE 2-1

OPERATIONAL MONITORING NETWORK

New Sites	Parameter	Instrument	Calibrator
Guyama (#15)	SO_2	TECO 43	Meloy CS-10
Existing Sites			
Guaynabo (#7)	SO_2	TECO 43	Meloy CS-10
Bayamon (#19)	SO_2	TECO 43	Meloy CS-10
Catano (#5)	SO_2	TECO 43	Meloy CS-10
San Juan (#9)	CO	Bendix 8501CA	
Toa Baja	O_3	Dasibi 1003	none*

*Note: EPA Region II has authorized EQB to use the Dasibi ozone analyzer without any external calibrator.

TABLE 2-2

EPA DESIGNATION NUMBERS FOR AIR QUALITY MONITORS

Instrument	Designation Number
TECO 43	EQSA-0276-009
Bendix 8501-5CA*	RFCA-0276-008
Dasibi	EQOA-0577-019

*The Bendix CO Analyzers being currently operated by EQB are not Reference or Equivalent method analyzers.

2.2.1 Field Operations

The operational calibration, maintenance, data handling, and initial validation in the field will be controlled by the SOPs included in Appendix B of this document. Table 2-3 lists these SOPs. Table 2-4 summarizes the maintenance and calibration schedules.

2.2.2 Electronics Lab

The Electronics Lab SOPs cover the in-house preventive maintenance and calibration of air quality sensors.

To minimize instrument downtime, a schedule of preventive maintenance is part of this program. The preventive maintenance program reflects the equipment manufacturer's recommendations, available field experience, and the needs of this program.

The detailed preventive maintenance schedule, together with the program procedure for carrying out the preventive maintenance actions, are documented in the SOPs in Appendix C.

These actions are summarized in Table 2-4 by type of equipment.

2.2.3 Scientific Inventories and Reports Division (Data Validation)

The initial data validation is done in the field by the field operator or technician in accordance with the criteria provided to him in the Field Operation SOPs (Appendix B).

SOPs to be followed by Data Services in the performance of additional data validation and data reduction are in Appendix D of this document.

The monthly data summaries will be produced under this group of SOPs. The data will be input for the final reports.

TABLE 2-3

SOP's GOVERNING PROJECT ORGANIZATION

SOP Classification { Field Operations; Electronics Lab; Scientific Inventories and Reports Division; Audits }

Field Operations	SOP Number
- General	
EQB Field Site Routine Visit	001
Air Quality Shelter Maintenance	002
Test Equipment Calibration	004
Field Calibration of Continuous Air Quality Analyzers	003
- Thermo Electron Model 43 SO_2 monitor	
Routine Operation	005
Multipoint Span Check/Field Cal	006
- Bendix Model 5801-5CA CO Monitor	
Routine Operation	007
Span Check/Field Cal	007
- Dasibi Model 1003PC O_3 Monitor	
Routine Operation	008
- Meloy CS-10 Permeation Tube SO_2 Calibrator	
Routine Operation	009
Electronics Lab	
- Calibration of Strip Chart Recorders	010
- Test Equipment Calibration	004
- Calibration and Stability Check of TECO 43 SO_2 Monitor	011
- Calibration and Stability Check of Bendix 8501-5CA CO Monitor	012
- Calibration and Stability Check of Meloy CS-10 SO_2 Calibrator	013
- Calibration and Stability Check of TECO 143 SO_2 Calibrator	014
Data Reduction, Processing, and Validation	
- TECO 43 Data Reduction and Checking	015
- Bendix 8501 Data Reduction and Checking	016
- Dasibi Data Reduction and Checking	017
Audits	
- Field Audit	018

TABLE 2-4

AIR QUALITY MONITORING EQUIPMENT MAINTENANCE AND CALIBRATION SCHEDULE

	Operation	Frequency	Reference
1.	TECO 43 SO_2 Analyzer		
	Zero check	Per site visit*	SOP 005
	Span check	Per site visit*	SOP 006
	Multipoint cal.	Quarterly**	SOP 011
	Check capillary	Per site visit*	SOP 005
	Hydrocarbon cutter	Yearly	SOP 011
	Preventice Maintenance Overhaul	Semiannually	SOP 011
2.	Bendix 8501-5CA CO		
	Zero check	Per site visit*	SOP 007
	Span check	Per site visit*	SOP 007 SOP 012
	Multipoint cal.	Quarterly**	SOP 012
	Filters	(As required)	SOP 012
	Preventive Maintenance Overhaul	Semiannually	SOP 012
3.	Dasibi 1003PC Ozone Analyzer		
	Zero check (analog)	Per site visit*	SOP 008
	Span check (analog)	Per site visit*	SOP 008
	Sample and control frequencies check	Weekly	SOP 008
	Filter	Bi-weekly	SOP 008
	Preventive Maintenance Overhaul	As needed	SOP 008
4.	Meloy CS-10 permeation tube calibrator		
	Filter change	As necessary	SOP 013
	Preventive Maintenance Overhaul	Yearly	SOP 013
	Verification of output	As necessary or no less than yearly	SOP 013
5.	TECO 143 permeation tube calibrator		
	Filter change	As necessary	SOP 014
	Preventive Maintenance Overhaul	Yearly	SOP 014
	Verification of output	As necessary or no less than yearly	SOP 014

Notes

*Once per week minimum.

**Or more frequently as required by regulations.

3. QUALITY ASSURANCE ORGANIZATION

The ERT Quality Assurance organization applicable to the EQB monitoring network under EPA Contract No. 68-02-2542 is contained in the ERT "Corporate Statement of Quality Assurance Policy and Organization" dated September 14, 1978. A copy of the document is included as Appendix F.

Key Quality Assurance personnel assigned to the EQB project are:

Karen Detore	Quality Assurance Manager
Scott Whittemore	Project Quality Assurance Officer

The EQB Quality Assurance organization personnel are:

Juan Merced	Director, Air Quality Bureau
Luis Matos	Technical Assistant to the Director, Air Quality Bureau
Israel Matos	Quality Assurance Officer

4. QUALITY ASSURANCE STANDARDS AND INSPECTIONS

In order to maintain consistently high quality throughout the program, a system of quality check points has been established. As described below, these check points occur during both the initial (start-up) phase and the on-going (operational) phase of the project.

4.1 Control of Purchased Material, Equipment, and Services

ERT will be responsible for shelter and spare parts procurement as detailed on the ERT work plan dated December 22, 1978.

ERT's Engineering Group will, at the time of purchase requisition of items for which ERT is responsible, insure that QA and inspection requirements and criteria are incorporated as part of the purchase order. The Engineering Group determines vendor qualification through past experience, vendor audits, in-house evaluation of new equipment, and its ability to meet applicable specifications for the program. They will define the need for source inspection, methods of notification, and the specific documents to be delivered with the item. The Production Control Group routes the material to the inspection facility or laboratory, together with the purchase order. The inspection facility will inspect the item in accordance with the criteria called out on the purchase order. Once inspection verifies the material, it is released to stock.

EPA/EQB will provide all the equipment listed in Table 1-1 of the aforementioned work plan. The equipment is expected to be in working order and to meet all EPA equivalency requirements. ERT will conduct factory inspection of new TECO 43 instruments as ordered by EPA Region II prior to shipment to Puerto Rico.

4.1.1 Inspection and Verification

All air quality related material and data will be inspected and/or verified in accordance with ERT SOPs.

For this program, the TECO 43 SO_2 analyzers will be source inspected at TECO. At that time, ERT QA personnel will verify conformance to the purchase order by the inspection and acceptance status by vendor QA, and

will verify performance by conducting acceptance tests on the equipment. Then the traceability of the vendors' primary calibration system will be verified. The following minimum inspection hold points have been established for purchased equipment:

- incoming inspection on air quality instrumentation,
- incoming inspection on all data and samples,
- outgoing inspection on equipment going to the field sites, and
- independent audit of the air quality installations within 6 months of start-up, to be conducted by ERT.

All records of inspection and verification activities will be retained in ERT files for those materials for which ERT is responsible.

4.1.2 Handling, Storage, and Shipping

ERT will ship to Puerto Rico all items described in Tables 1-2 and 1-3 of the above mentioned work plan.

ERT has developed special packing for delicate instrumentation, and it is the responsibility of Shipping and Receiving to assure that safe, adequate shipping practices are followed for those items for which ERT is responsible.

EPA/EQB will provide the necessary air conditioned storage area to store spare instruments, supplies, and parts.

4.1.3 Nonconforming Items

For this program, nonconforming items may stem from:

- vendor hardware,
- incoming and outgoing inspection of samples and equipment, or
- field failure.

The nonconformance will be reported in inspection reports, reject tag, or failure reports. The material will be segregated until its disposition by the appropriate supervisor.

4.2 Calibration of Measuring Equipment

Air quality analyzers will be calibrated according to the schedule in Table 2-4 following the applicable SOPs.

Test equipment (DVMs, scopes, etc.) will be calibrated at a sub-contractor's facility according to the provisions in SOP-004, which appears in Appendix C.

Calibration results must be reviewed by the supervisor and approved or rejected. The EQB QA officers will periodically inspect the completed documentation to assure compliance with SOPs and quality control review.

4.3 Document Control

All SOPs and drawings prepared by ERT are issued as controlled documents. That is, each original is distributed to the persons needing it; a record is kept of the recipients, and subsequent revisions are distributed to the original list. Complete numbered volumes of SOPs are distributed internally.

EQB should develop similar document control procedures related to QA proceedings. The EQB QA Officer is responsible for updating and fine tuning of the SOPs to EQB's need as a constant ongoing QA effort.

4.4 Auditing and Corrective Action

The purpose of field audits is to provide independent verification of instrument status and condition, and the adequacy of and compliance with the SOPs.

EQB will perform quarterly audits for the network following the guidelines of 40 CFR 58 Appendix A, taking into account the proposed revisions to the regulation. These audits will be performed under ERT supervision as stated in the contractual agreement. Appendix E has the SOP to be followed for field audits.

The audit procedure discussed herein is applicable to both the field operations and the analysis and reduction efforts. The audits will be conducted using a prepared checklist by appropriately trained personnel having no direct responsibility for the activity being audited.

Audit findings will be transmitted to all concerned parties including appropriate levels of management within 15 days of the audit by means of a formal report. Conditions needing immediate attention will be addressed at the time of audit. Corrective actions will be documented by using the corrective action request (CAR) procedure outlined below or by inclusion in the audit report. Re-audits will be performed, as necessary, to verify implementation of corrective actions.

ERT shall also perform one independent QA audit during the three month surveillance period. This audit will consist of the use of a calibrator independent of the existing network.

5. QUALITY ASSURANCE RECORDS AND REPORTING

The results of Quality Assurance inspections, calibrations, audits, and procedures must be reported and recorded. The reporting function serves to ensure a smooth flow of information to the concerned parties regarding a situation which affects (or may affect) the quality of the product. The records generated under this system provide a trail of documentation, by which the data from any given sensor(s) may be evaluated in terms of quality.

5.1 Quality Assurance Records

ERT maintains a series of records in order to meet the requirement of "Records Management" in this QA program Plan and to provide evidence of activities affecting quality. These records include results of reviews, inspections, tests, audits, equipment tracking, monitoring of work performance, and individual instrument calibration, and are retained in the QA Library. Records are retained by ERT for at least three years in the QA Library, which has supervised access.

EQB should maintain a similar QA Library documenting results of reviews, inspections, tests, audits, monitoring of work performance, and individual instrument calibration.

5.2 Corrective Action Request Procedures

The purpose of the Corrective Action Request (CAR) is to establish a procedure for reporting unsatisfactory conditions and to provide a record of corrective action. The EQB QA officer will request corrective action in written form when he deems a discrepancy significant (potentially repetitious, having program impact, or having the potential for unnecessary program costs). When a CAR is initiated by someone other than the QA officer, the request must be sent to the QA officer for purposes of tracking and approval. This corrective action procedure will apply to

both in-house EQB operations and to EQB subcontractors. In general, a CAR will not be initiated when the discrepancy is insignificant, or when the corrective action has already been performed. The QA officer will:

- review nonconformance reports and Quality Audit Reports to determine that corrective action is required.
- forward a copy of the CAR to the appropriate area supervisor, and
- file copies of CARs for follow-up and review by both the QA officer and the Audit file.

The Area Supervisor will:

- review the CAR for concurrence with findings (if he does not concur, the supervisor will return the CAR with his written objections),
- take corrective action and report on that action, and
- return the CAR to the issuing QA officer within 10 days.

The QA officer will:

- review the corrective action file and follow up on the efficacy of the corrective actions specified.

6. ACCEPTANCE

This Quality Assurance Program Plan has been developed by Hector Diaz, Field Supervisor, of ERT.

Revised by:

_____

Anthony Sacco
Senior Project Engineer

_____

Karen Detore
Quality Assurance Manager
ERT

_____

Alberto Costales
Program Manager
ERT

Accepted by:

_____

John Hum
EPA

6. ACCEPTANCE

This Quality Assurance Program Plan has been developed by Hector Diaz, Field Supervisor, of ERT.

Revised by:

_____

Anthony Sacco
Senior Project Engineer

_____

Karen Detore
Quality Assurance Manager
ERT

_____

Alberto Costales
Program Manager
ERT

Accepted by:

_____

John Hum
EPA

APPENDIX A

TECHNICAL BULLETINS

Thermo Electron
CORPORATION
Environmental Instruments Division

Pulsed Fluorescent SO_2 Analyzer

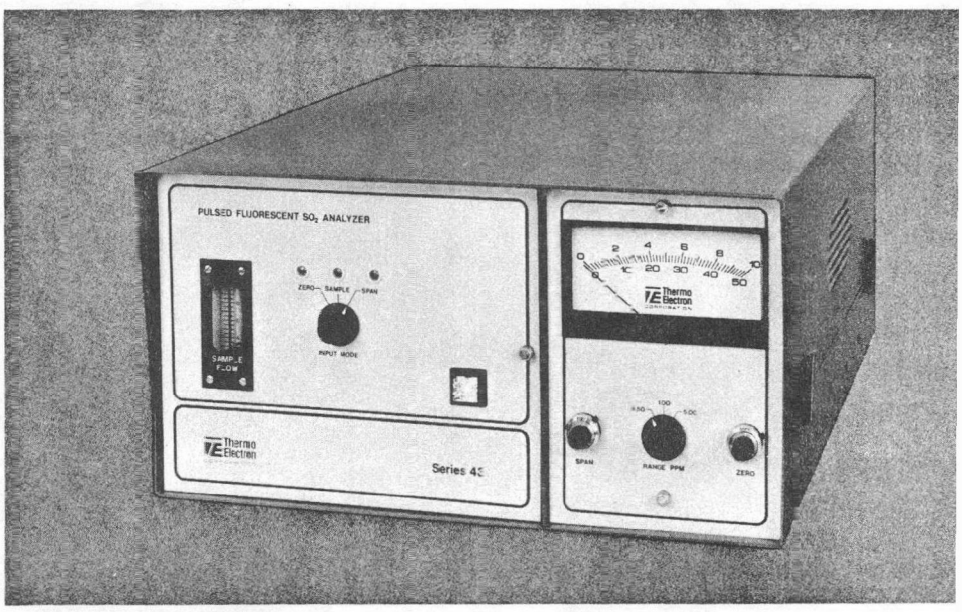

For Continuous Ambient Air Monitoring

Thermo Electron's ***Model 43 Pulsed Fluorescent*** SO_2 Analyzer provides unequaled ease of operation, reliability, precision and specificity. This unique, patented, field-proven ***Pulsed Fluorescence*** method offers significant advantages for measuring ambient SO_2 by eliminating the need for expensive and time-consuming maintenance and replacement of consumables.

Key Features

- ***EPA Approved*** (EQSA-0276-009)*
- No consumable gases or wet chemicals required
- Longterm zero and span stability
- Maintenance-free
- Field proven reliability
- Insensitive to changes in flow and temperature
- Specific to SO_2
- Linear response through all ranges
- Totally self-contained
- Longterm unattended operation

*See Federal Register, Tuesday, February 18, 1975, Volume 40, Number 33, Part II for definitions and Federal specifications.

Model 43 Specifications*

Ranges	0–0.5, 0–1, 0–5 ppm
Noise	0.001 ppm
Lower Detectable Limit	0.002 ppm
Interference Equivalent	
O_3	0.000 ppm
H_2S	0.000 ppm
NO_2	0.000 ppm
CO_2	0.000 ppm
CO	0.000 ppm
C_2H_4	0.000 ppm
H_2C	0.000 ppm
NO	0.005 ppm
Zero Drift, 24 hrs	± 0.003 ppm
7 days	± 0.005ppm
Span Drift, 24 hrs	± 1%
7 days	± 2%
Lag time	10 sec
Rise Time (0-95%)	2 min
Fall Time (0-95%)	2 min
Precision	± 0.5%
Operating Temperature	5 to 45°C
Power Requirements	150 watts; 115V AC / 60 Hz; 115V AC / 50 Hz; 220V AC / 50 Hz
Physical Dimensions	17" W x 8¾" H x 23" D
Weight	55 lbs
Output	0–10V standard; also available; 0–5V, 0–1V, 0–100mV, 0–10mV, (field-selectable)
	Other outputs available on request (dual, 4-20 ma, 1 hr. integrated value, etc.)

Principle of Operation

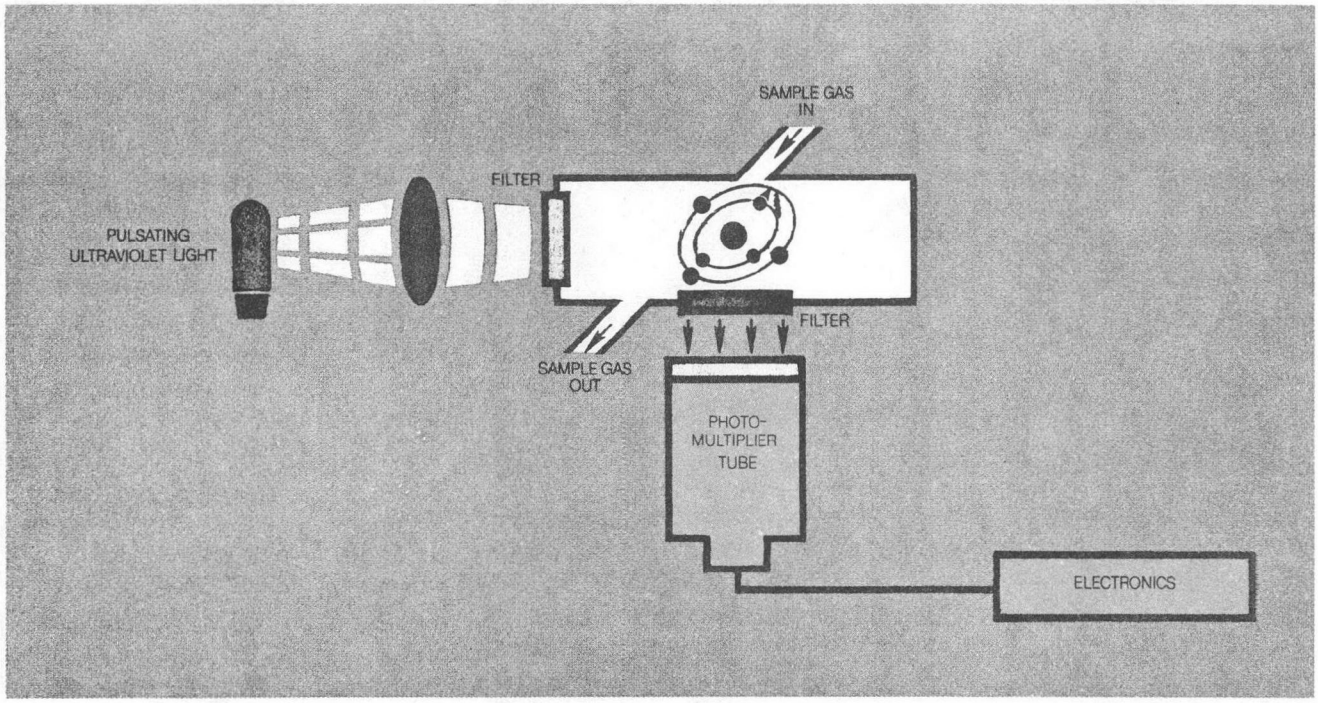

As illustrated in the above diagram, pulsed ultraviolet light passes through a narrow bandpass filter to a measurement chamber where it excites SO_2 molecules. As these molecules return to the ground state they emit a characteristic fluorescence with intensity linearly proportional to the concentration of SO_2 molecules in the sample. The fluoresced light then passes through a second filter to illuminate the sensitive surface of a photomultiplier tube. Electronic amplification of the output of the photomultiplier tube provides a meter reading and an electronic analog signal for recorder output.

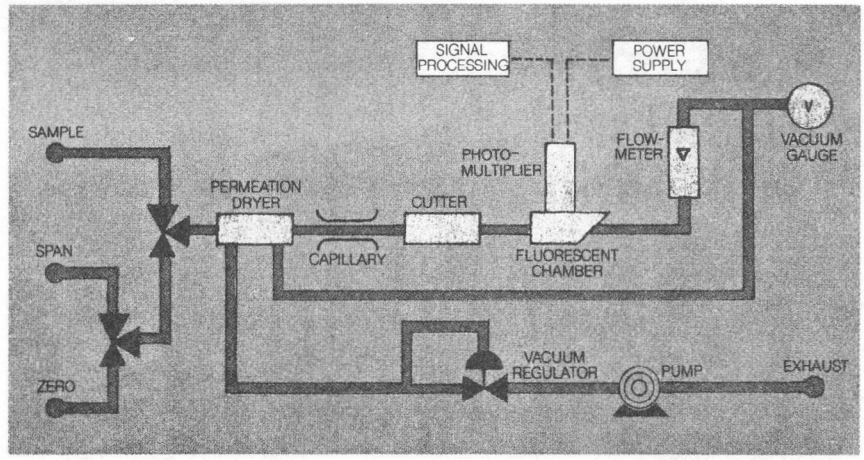

Options

43-001 19″ Rack-mountable configuration

43-002 External activation of zero/span solenoids

Thermo Electron CORPORATION

Environmental Instruments Division

108 South Street
Hopkinton, MA 01748
(617) 435-5321

Printed in U.S.A.
15M — BAI — 278

Bendix Model 8501-5CA CO Analyzer

PERFORMANCE PARAMETERS

The minimum performance parameters for the Infrared Gas Analyzer are presented below. The instrument will operate within these state performance parameters under the conditions listed.

a. Ranges: 0-50, 250, 500 and 1000 PPM CO full scale.*
b. Minimum Detectable Sensitivity: 0.5 PPM
c. Electronic Response Time: 0.7 second to 90% of full scale
d. Time Constant: Continuously adjustable 0.7 to 16 seconds
e. Zero Drift: 0.5% per hour or ±1% for 24 hours whichever is lower, ±2% of full scale for 3 days
f. Span Drift: ±1% for 24 hours, ±2% of full scale for 3 days
g. Precision: 1% of full scale
h. Noise: ±0.5% of full scale (max.) with 5 second time constant
i. Linearity: ±0.5% of full scale on 50 PPM range
   ±1% of full scale on 250, 500 and 1000PPM range
j. Interference Equivalent: CO_2 rejection ratio 40,000 to 1
   Water vapor rejection ratio 20,000 to 1
   Less than 1 PPM
k. Outputs: 0-10 mV, 0-100 mV, 0-1 V, and 0-10 Volts
l. Power Requirements: 105 to 125 Volts, 50 or 60 Hz, 300 W (Approx.)

PHYSICAL CHARACTERISTICS

a. Overall dimensions: 30" (76 cm) high, 19" (48 cm) wide, and 11" (27 cm) deep
b. Weight: Approximately 60 pounds (27.22 kg.)

*Other optional higher ranges are available and will not effect the 0-50 ppm range perfromance. Because the ranges are selected by four resistive feedback networks, changing the resistance value for the three upper ranges will have no effect on the lower range.

Dasibi Model 1003PC Ozone Monitor

SPECIFICATIONS

RANGE	0.000 to 0.500 or 1.000 PPM*†
INCREMENTAL SENSITIVITY	0.001 PPM
ACCURACY	3% (Based on Beer's Law)
PRECISION (REPEATABILITY)	±1% OR 1 DIGIT, WHICHEVER IS GREATER
ZERO DRIFT	
DIGITAL AND BCD OUTPUT	LESS THAN 0.1%/DAY
ANALOG OUTPUT	LESS THAN 0.5%/DAY & ± 1%/3 DAYS
SPAN DRIFT	
DIGITAL AND BCD OUTPUT	LESS THAN 0.1%/DAY
ANALOG OUTPUT	LESS THAN 0.5%/DAY & ± 1%/3 DAYS
INTERVAL (INFORMATION UPDATE)	24 SECONDS**
FLOW RATE	2 Lit/Min NOMINAL
RISE TIME 90%	25 SECONDS MAXIMUM
FALL TIME 90%	25 SECONDS MAXIMUM
LINEARITY - FROM 0.000 to 1.000 PPM	1%
TEMPERATURE RANGE	0°C TO 50°C (32°F TO 122°F)
POWER	110V, 50 TO 400 Hz, 110 WATTS AVE. (220V AVAILABLE)

OUTPUT

DIGITAL DISPLAY	0.000 TO 1.000 PPM
ANALOG	1 mV per .001 PPM (STD) ADJUSTABLE TO 0.1 mV per .001 PPM***
BCD (OPTION)	8-4-2-1, STANDARD TTL BUFFERED OUTPUT
0 LEVEL	0.4V MAXIMUM
1 LEVEL	2.4V MINIMUM
DATA-READY PULSE	150 ms

CABINET		BENCH MOUNT	19 INCH RACK MOUNT
WIDTH		38 cm (15 INCHES)	48 cm (19 INCHES)
HEIGHT		13 cm (5 1/4 IN.)	13 cm (5 1/4 IN.)
DEPTH		56 cm (22 INCHES)	56 cm (22 INCHES)
WEIGHT	(INSTRUMENT)	14 Kg (31 LBS)	14 Kg (31 LBS)
	(TOTAL SHIPPING)	16 Kg (35 LBS)	16 Kg (35 LBS)

* 0 TO 20 PPM AND OTHER RANGES TO 10% OZONE BY WEIGHT AVAILABLE

** OTHER CYCLE TIMES FROM 10 SECONDS AVAILABLE

*** .01 mV PER .001 PPM AND 10 mV PER .001 PPM ALSO AVAILABLE. STATE RANGE WHEN ORDERING

† The instrument does not have a range switch but reads continuously from .001 PPM to 1 PPM. It meets the EPA Designated range requirements for 0.5 and 1.0 PPM.

Meloy Model CS-10 Permeation Tube SO_2 Calibrator

Specifications:

Range:	Factory calibrated for selectable setting of any SO_2 concentration level between 0.1 and 0.8 ppm.
Calibration:	±2% of NBS Certified Standard
Accuracy:	±2% of Calibration Curve
Ambient Temperature Range:	10°C to 40°C
Tube Life:	Approximately six months of continuous operation
Flow Control:	±2%
Air Bath Temperature Variation:	(a) ±0.01°C at any setting
Temperature Control:	Precise electronic temperature controls with visible front panel function indicator
Airflow Readings:	Front panel 150 mm flow meter with stainless steel glass floats
Size:	14" x 12" x 12"
Weight:	26 lbs.
Power:	110 VAC, 50/60 Hz, 60 Watts

APPENDIX B

FIELD OPERATIONS SOPs

STANDARD OPERATING PROCEDURE

Title:

Date: 3/1/79
Number: 001
Revision: 0

EQB FIELD SITE ROUTINE VISIT

Prepared by

ENVIRONMENTAL RESEARCH & TECHNOLOGY, INC.
for the Puerto Rico Environmental Quality Board
under Contract No. 68-02-2542

STANDARD OPERATING PROCEDURE

Title: EQB FIELD SITE ROUTINE VISIT

Date: 3/1/79
Number: 001
Revision: 0

EQB FIELD SITE ROUTINE VISIT

1.0 Purpose and Philosophy

1.1 This procedure describes the basic routine for field technician visits to EQB monitoring sites. The principal objectives of each visit are to:

- Assess the status of each monitoring system.
- Evaluate the quality; that is, the validity, of data gathered.
- Perform maintenance tasks as scheduled or indicated.
- Document all significant information for use in historical analysis.

1.2 The first assessment of data validity is performed by the field technician. The field technician, being at the point of measurement and having first-hand knowledge of instrument status and performance, is able to identify data which are not valid or suspect. Guidelines for making these judgments, and documentation for historical verification, are described in this procedure.

1.3 It is a goal of this procedure to eliminate the recording of data not essential to the data validation or instrument maintenance processes.

1.4 This SOP does not describe detailed corrective actions for abnormal conditions. These instructions are provided in the instrument-specific SOPs and the instrument manuals.

2.0 Responsibilities

2.1 The EQB field technician assigned to each network is responsible for performance in accordance with this procedure, and for the completion and submission of the indicated documents.

2.2 The district supervisor is responsible for monitoring the field technician's performance by this SOP, for parallel review of the documentation submitted, and for response to the field technician's request for assistance.

2.3 The Air Quality Data Handling Division department and team supervisors are responsible for feedback of information to Field Operations concerning errors or improvements in the field data submitted.

3.0 Methods

3.1 This SOP addresses the EQB 6 station monitoring network developed by ERT under EPA Contract No. 68-02-2542, where there are Teco SO_2 Bendix CO, and Dasibi O_3 monitoring instruments and where the

frequency of site visits is dictated by the QA Program Plan and applicable SOPs. For specific site use, only applicable portions of the status/data assessment sheets should be used.

3.2 Data and Document Submissions

3.2.1 Strip chart records and one copy of each of the weekly forms - the status/data assessment sheets and the field station log - are submitted each week to the Scientific Inventories and Reports Division.

3.2.2 The original of each of the weekly forms is retained at the site.

3.2.3 One copy of each of the weekly forms is submitted to the district office.

3.3 Data Validity and Instrument Status

3.3.1 One of the functions required of the field technician is to provide an assessment of data validity for data collected from sites under his jurisdiction. A series of criteria has been developed to define validity and provide the necessary documentation to prove data validity. The EQB Status/Data Assessment sheets, EQB forms 001-A, 001-B, and 001-C, provide guides for this assessment and a medium for documentation. Sample forms are attached.

3.3.2 Status/Data Assessment sheets are to be filled out at least once each week. Spaces are provided for a check-off procedure of up to four times each week. It is necessary only to fill in the remaining items on the final day of the week being reported. Additional days may be desirable, but are not mandatory.

3.3.3 The check-off procedure requires the entering of a check (√), indicating YES, or a NO for each item. The entering of a NO often indicates that on-site corrective action or notification of district personnel for corrective action assistance is required. The appropriate action should be taken and stated in the field station log.

3.3.4 Spaces are provided on the sheets for identifying data as valid, suspect, or invalid. The field technician is required to classify all data obtained during the week, by date and time, based on the criteria listed and THE BEST JUDGMENT OF THE FIELD TECHNICIAN.

3.3.5 Certain checks are common to most of the parameters and are defined as follows:

3.3.5.1 "Strip chart time, supply, marked?"

a) Is the indicated strip chart time accurate? If the chart requires adjustment to match the time, the chart should be clearly marked before and after adjustment.

b) Is the chart supply adequate until the next visit?

c) Are the date and time of visit clearly marked on the chart?

3.3.5.2 "Is ENTIRE prior strip chart OK?" The field technician is to examine the portion of the strip chart generated since the last examination for normal and anomalous data.

3.3.5.3 Serial Numbers. Indicate instrument serial numbers in the left hand margin for each air quality sensor.

3.3.6 Status/Data Assessment Sheet Items

3.3.6.1 Shelter Status:

a) "Temp. (67-78°F)?" - check the current temperature. Where high-low thermometers are installed, check the high and low since the last visit; reset the high and low markers.

b) "Manifold pump OK?" - verify that the pump is operating; visually inspect all connections.

3.3.6.2 Calibrator Status

Refer to SOPs 006 and 009.

3.3.6.3 Teco SO_2

Refer to SOPs 005 and 006.

3.3.6.4 Bendix CO

Refer to SOP 007.

3.3.6.5 DASIBI O_3

Refer to SOP 008.

3.3.6.6 Normal Conditions

Indicate any local conditions (here or on the field station log) which might explain abnormal, but not necessarily invalid, data. Conditions worth noting would include precipitation, wind and dust storms, construction, traffic, harvesting, or obvious sources which might increase pollutant concentrations.

3.3.7 Data Validation

ALL DATA COLLECTED THAT MEET THE ABOVE DATA CRITERIA SHOULD BE CONSIDERED VALID DATA. If any data falls within the "suspect" or "invalid" categories, reasons for the nonvalid categories should be specified on the status/data sheet or associated log sheet. These same periods of suspect or invalid data should also be clearly marked on the strip chart. Actions taken to correct cause of nonvalid data should be specified in the field station log.

3.4 Preventive maintenance

A series of weekly preventive maintenance activities and measurements are also listed in the applicable SOP. The items listed are self-explanatory, and details on how such measurements and cleanings should be performed are contained in the individual instrument manuals.

3.5 Field Station Log

This log will be used to record all occurrences at the station which may be of significance in later analysis of the data or in the operational and maintenance history of any of the installed instruments or equipment and test equipment. Included are the following items:

3.5.1 Changes and calibrations of all equipment and serial numbers of each piece of equipment.

3.5.2 A description of any NO entries on the Status/Data Assessment Sheet, and action taken, if any.

3.5.3 A description of abnormal conditions, as discussed in 3.3.6.6.

3.5.4 A description of "suspect" or "invalid" data, as discussed in 3.3.7 and 3.3.4.

3.6 Guidelines for Documentation

3.6.1 The purposes of the status/data assessment sheet, the field station log and chart markings are:

a. To mark clearly data judged as valid, suspect, or invalid.

b. For invalid data, to state clearly why the data is invalid.

c. For suspect data, to provide all information which will aid in the evaluation of data validity.

d. For all operations, to provide all information which may be helpful or necessary in analyzing air quality conditions, instrument performance, and site activities.

STANDARD OPERATING PROCEDURE

Title: EQB FIELD SITE ROUTINE VISIT

Date: 3/1/79
Number: 001
Revision: 0

3.6.2 These documents are official program records, and may be used in subsequent legal proceedings.

3.6.3 Entries should be simple and clear. Field technicians should note that an analyst, meteorologist, shop repairperson, or source operator may need to use the information weeks or months later. Be as precise as possible. For example, do not say "sensor" down if it is the recorder and not the sensor that is down. Another example; differentiate between "timer" and "elapsed time meter."

3.6.4 Entries on the right side of the status/data assessment sheet should be limited to the following:

a. Classification of data as valid, suspect, or invalid.

b. If more than one classification for the week, the start and end data and time for each classification.

c. Short entries of why data is suspect or invalid. (Details should be in the field station log.)

d. Short entries explaining NO's; for example, where a reading is out of tolerance, indicate the reading. (Again, detail's of why or subsequent action should be in the field station log.)

3.6.5 Documentation should be consistent in that the chart, the status/data assessment sheet, and the field station log all cover the same one week period, usually 0001 Monday to 2400 Sunday. It is understood that entries describing data prior to 2400 Sunday will usually be made and dated on the following Monday or Tuesday. Nonetheless, all sheets describing the data week for charts should be packaged with the charts.

4.0 Quality Assurance Audit

The Divisional Quality Assurance Officer shall conduct audits of this procedure and corrective actions will be taken as required.

STATUS/DATA ASSESSMENT SHEET 001A

SOP 001

TECO MODEL 43 SO_2

NETWORK:_____ STATION:_____ STATION NO.:_____

OPERATOR:_____ WEEK ENDING:_____

					DATA		
DATE:							
LOCAL STANDARD TIME:					Valid	Suspect	Invali
	✓ or NO*						
SHELTER STATUS:							
Temp. = 67° - 78°F?							
Manifold Pump OK?							
Calibration Controller OK?							
CALIBRATOR:							
Temp. = Des. ±0.1°C							
TECO 43 STATUS:							
Flow Rate = 2 to 4 SCFH?							
Pressure at 10 ± 0.1" Hg?							
Strip Chart Time, Supply Marked?							
TECO 43 DATA:							
All Prior BLs 0 ppm ± 0.005 ppm (0.10V)							
All prior Spans ±15% of Desig.							
Entire prior chart OK?							

MANUAL CALIBRATION: DATE _____ _____

Zero = 0 ± 0.005 ppm (0.10V)? _____ _____

Calibrator Flow ± .5 mm of Des.? _____ _____

Teco output ±15% of Des.? _____ _____

WEEKLY CHECKS:

Cooling fan working?_____ Pump OK?_____ Capillaries clean?_____ UV lamp working?_____

PC Board: FS = 10 ± 0.01 Volts?_____

Output Board: FS = 10 ± 0.01 V?_____

BI-WEEKLY: Particulate filter changed? _____

*Explanations of all NO entries should appear in the field station log.

EQB Form 001-A

STATUS/DATA ASSESSMENT SHEET

BENDIX 8501-5CA-CO ANALYZER

NETWORK_____ STATION_____ STATION NUMBER_____

OPERATOR_____ WEEK ENDING_____

DATE ___ ___ ___ ___

LOCAL STANDARD TIME ___ ___ ___ ___

	✓ or NO*				DATA VALID (Show date and time for each category)	DATA SUSPECT (Show date and time for each category)	DATA INVALID (Show date and time for each category)
SHELTER STATUS: Temp. (67-78°F)	___	___	___	___			
Manifold Pump OK?	___	___	___	___			
BENDIX CO STATUS: S/N_____							
Strip Chart time, supply marked?	___	___	___	___			
Sample flow = 3.00 ± 1 cm?	___	___	___	___			
Cal. Gases > 300 psi?	___	___	___	___	___	___	___
DATA: Strip chart?	___	___	___	___			
All prior Os 8-12%?	___	___	___	___			
All prior spans ±5% of Des.?	___	___	___	___			
If not, is recal. OK?	___	___	___	___			
Entire prior chart OK?	___	___	___	___	___	___	___
NORMAL CONDITIONS?	___	___	___	___			

WEEKLY CHECKS

BENDIX CO

Back pressure ± 1 psi of Des.?_____

Sample filter clean?_____ Gas filter clean?_____

Manifold connections tight?_____ Vent lines unobstructed?_____

Unfiltered noise < 0.2V?_____

CALIBRATION:

Initial: Zero_____ppm Span_____ppm

Final: Zero = 0 ± 1 ppm?_____ Span = Des. ppm ± 5%?_____

Zero Pot. Prev./Current_____/_____ Span Pot. Prev./Current_____/_____

*Explanation of all NO entries should appear in field station log.

EOB Form 001-B

STATUS/DATA ASSESSMENT SHEET

DASIBI MODEL 1003 O_3 MONITOR

Form 001-C

NETWORK:_____ STATION:_____ STATION NO.:_____

OPERATOR:_____ WEEK ENDING:_____

					DATA		
DATE:	____	____	____	____			
LOCAL STANDARD TIME:	____	____	____	____	Valid	Suspect	Invalid
			√ or NO*				
SHELTER STATUS:							
Temp. = 67° - 78°F?	____	____	____	____			
Manifold Pump OK?	____	____	____	____			
DASIBI DAILY CHECKS:	____	____	____	____			
Sample Flow 2 ℓ/min	____	____	____	____			
Span No. - 54.950	____	____	____	____			
Control Frequency between 23.0 and 28.0	____	____	____	____			
Sample Frequency between 35.0 and 48.0	____	____	____	____			
Zero Offset Pot	____	____	____	____			
Zero Check	____	____	____	____			
Lines Connected Properly	____	____	____	____			
					____	____	____
DASIBI MONTHLY CHECKS							
Mother Board Voltages							
+5VDC ± 0.25V	____	____	____	____			
±15VDC ± 0.75V	____	____	____	____			
±24VDC ± 1.2V	____	____	____	____			
±200VDC ± 20V	____	____	____	____			
Cycle Time between 20 and 30 sec	____	____	____	____			
Temperature Control Voltage	____	____	____	____			
Analog Zero	____	____	____	____			
Span = 54.950	____	____	____	____			
Sample Frequency between 35.0 and 48.0	____	____	____	____			
Control Frequency between 23.0 and 28.0	____	____	____	____			
Determine Zero Offset	____	____	____	____			
System Leak Check	____	____	____	____			
Solenoid Valve Leak Check	____	____	____	____			
Scrubber Efficiency >96%	____	____	____	____			
Replace Particulate Filter	____	____	____	____			
					____	____	____

*[illegible]

STANDARD OPERATING PROCEDURE

Title:

Date: 3/1/79
Number: 002
Revision: 0

EQB Air Quality Shelter Maintenance

Prepared by

ENVIRONMENTAL RESEARCH & TECHNOLOGY, INC.
For the Puerto Rico Environmental Quality Board
under Contract No. 68-02-2542

STANDARD OPERATING PROCEDURE

Title: Air Quality Shelter Maintenance

Date: 3/1/79
Number: 002
Revision: 0

1.0 PURPOSE

1.1 This procedure is intended to provide a basic method for proper inspection and maintenance of air quality shelters in the field.

2.0 RESPONSIBILITIES

2.1 The EQB field technician is responsible for carrying out the shelter maintenance and for ensuring that it is accomplished in accordance with this procedure.

3.0 EXTERIOR DAILY (or each site visit)

3.1 General inspection for damage to fencing, posts or pipe courses and ground wires. Note in log any occurrences of damage and notify supervisor.

3.2 Shelter - Visual inspection for damage to shelter walls, ladders, stairs, and safety rails, etc. (rock throwing damage, shotgun blast, bullet holes, and peeling paint, etc). Note in log any occurrences and notify supervisor. Make temporary repair if warranted. Note condition of sampling funnel and screen on air sampling tube.

3.3 Grounds - visual inspection. Remove debris. Gravel properly distributed. Note condition of grass.

4.0 EXTERIOR WEEKLY

4.1 Fencing - See paragraph 3.1 above.

4.2 Shelter - See paragraph 3.2 above.

4.3 Grounds - Grass around shelters, inside the fence and within two feet of the outside of the fence area should be cut at least once a week.

4.4 Exterior - Six Months

4.4.1 Scrape off any flaking paint and wire brush bare spots. Touch up with an epoxy base outside enamel paint. (Suggest Rustoleum, 4 in 1 brand or equal). Recaulk cracked caulking.

4.5 Exterior - Yearly

4.5.1 Shelters that have had extensive patch work on touch up should be completely repainted after a wash down with detergent and water.

5.0 INTERIOR

5.1 Interior - Daily

5.1.1 Perform visual inspection of the air conditioner, thermostat, and shelter temperature for proper operation. The correct shelter temperature should be: 67° - 78°F for Air Quality Shelters.

STANDARD OPERATING PROCEDURE

Title: Air Quality Shelter Maintenance

Date: 3/1/79
Number: 002
Revision: 0

5.1.2 Perform a visual check of the air sampling manifold system. Verify that all sample connections are secure and that the manifold fan is operating.

5.1.3 Deposit all useless papers and containers in trash basket.

5.2 Interior - Weekly

5.2.1 Empty trash containers,

5.2.2 Sweep shelter floors and spot-clean floors where necessary.

5.3 Interior - Monthly

5.3.1 Check and tighten if necessary all sample line connections.

5.3.2 Dust tables, racks, and ledges.

5.3.3 Wash floors with a light detergent solution. Use steel wool for removal of scuff marks.

5.3.4 Wax floors with a suitable liquid self-polishing wax.

5.4 Interior - Six months preventative maintenance procedure for Air Sampling Manifolds.

5.4.1

a) Before starting note on strip chart time, day, parameter, and site ID.

b) Remove sample line from rear of analyzer (this will eliminate any foreign matter entering unit).

c) Tubing - 1/4" from sample port to manifold. Remove from manifold and check that line is clear. -1/4" to 1/8" from sample port to manifold. Disconnect 1/8" completely (some cases will involve removing heat shrink tubing). This must be done in order to insure sample line remains clear and then remove 1/4" line from manifold.

d) After all sample lines are removed, disconnect and remove glass manifold assembly (Note: In some cases removal does not apply; manifold should be cleaned in place). See sheet 3. Using a plastic dishpan, mix a solution of water and a small amount of mild, nonammonia detergent (a laboratory glass cleaner like Calgonite is suggested). Wash thoroughly and rinse with clear water and let dry. Reverse procedure steps d-a for reinstallation.

e) Upon completion of procedure ensure that all analyzers are sampling from manifold, mark strip charts accordingly.

STANDARD OPERATING PROCEDURE

Title: Air Quality Shelter Maintenance

Date: 3/1/79
Number: 002
Revision: 0

5.4.2 Check sample tube intake section ahead of manifold for stoppages and clean with brush assembly or other equipment provided for that purpose. For sectional glass sample line assemblies see Paragraph 6.0.

5.4.3 Replace teflon span, sample, and hydrogen lines.

6.0 PROCEDURE FOR CLEANING NONREMOVABLE MANIFOLD - SECTIONAL GLASS TYPE

6.1 When removal of manifold is not possible, i.e., when manifold is completely fabricated from glass, the following steps should be used after completing steps a-d.

Materials required: 25' nylon line 1/16" diameter
Round soft bristle brush 3" diameter
Squeeze bottle 1 pt. or larger

6.2 Shut down sample vacuum pump and remove from bottom of manifold.

6.3 Set dishpan containing cleaning solution beneath manifold.

6.4 From the topside end of the manifold feed nylon line into interior, attach soft bristle brush to this line plus another line from inside shelter.

6.5 Position one man on roof and work brush up/down several times using solution. Remove brush. Topside man squirt clear water to rinse. Let assembly dry a few minutes. Reconnect sample vacuum pump and let run 10-15 minutes before inserting sample lines.

7.0 The divisional QA officer shall conduct audits of this procedure. Corrective action will be taken as required.

STANDARD OPERATING PROCEDURE

Title:

Date: 3/1/79
Number: 003
Revision: 0

EQB FIELD CALIBRATION OF CONTINUOUS AIR QUALITY ANALYZERS

Prepared by

ENVIRONMENTAL RESEARCH & TECHNOLOGY, INC.
for the Puerto Rico Environmental Quality Board
under Contract No. 68-02-2542

STANDARD OPERATING PROCEDURE

Title: FIELD CALIBRATION OF CONTINUOUS AIR QUALITY ANALYZERS

Date: 3/1/79
Number: 003
Revision: 0

1.0 Purpose and Applicability

1.1 The purpose of this SOP is to assure that the output of the field measurement process conforms to accurate standards and is traceable to National Bureau of Standards (NBS) Standard Reference Material (SRM) or equivalent.

1.2 This procedure applies to field calibration of any continuous air quality analyzers.

2.0 Definitions

Accuracy - The extent to which a measurement or the average of numerous measurements recorded by a single analyzer agree with the true value. The difference between the true value and the measured value is defined as the error. An analyzer is considered accurate if the error is less than the tolerance or control limits.

Assignable Cause - A cause which can be found and corrected.

Audit - An independent review conducted to compare some aspect of performance with a standard for that performance. A performance audit of a continuous gas analyzer incorporates a calibration check utilizing multiple known inputs; however, it is not a multipoint calibration.

Audit Calibrator - A device other than the in-station calibrator or the reference calibrator which is used only for audits. The audit calibrator must be an EPA-approved transfer standard, in current calibration, capable of producing gases at several concentrations equally spaced over the operating range of the analyzer to be audited. These "test atmospheres" must be traceable to a primary standard.

Calibration - The process of establishing the relationship between the output of a measurement process, and that of a known input.

Calibration Check - The process of determining the relationship between the output of a measurement process and that of a known input in order to ascertain the extent to which it agrees with the desired relationship.

Calibrator - A device used to generate a known input or range of known inputs.

Control Limit - A value calculated from a sample of test data, and expressed as a hypothetical test value, which defines a limit of random cause in the variation of the test data. Control limits are most often a pair of values defining limits of upward and downward variation.

Example: If the designated automatic span value for a given analyzer-calibrator pair is 80 ppb and the calculations indicate that variations of ±10 ppb or less are attributable to random cause, then the control limits for these spans are:

Upper - 90 ppb
Lower - 70 ppb

Variations outside control limits are attributable to assignable cause. As used in this document, "control" and "tolerance" are nearly identical in meaning.

Data Processing Center - The location and group where data for a network are processed.

In-Station Calibrator - A calibrator integrated with a continuous monitor in a field monitoring site.

Multipoint Calibration - A calibration utilizing 1) multiple known inputs for the initial calibration check to determine linearity and accuracy of response, 2) adjustment or readjustment, if required, based upon the tolerance or control limits, 3) a final calibration check to confirm linearity and accuracy of response following adjustment or readjustment, and 4) at least 3 points and zero.

Precision - The extent to which any individual value in a set of controlled test data can be expected to agree with the average of the set. The variability of data. Precision is not a measurement to determine "how far" from the true value (accuracy) but rather how scattered are the measurements.

Primary Standard - A method, device, or material having known, stable, measurable, and readily reproducible characteristics.

Random Cause - A cause which cannot be isolated and/or attributed to a correctable condition.

Reference Calibrator - A device other than the in-station calibrator, which is used to calibrate or check an analyzer in the field. A reference calibrator must be in current calibration and capable of producing concentrations over the range of the analyzer to be calibrated or checked. This calibrator should be traceable to a primary standard.

Span Check - An input generated by a calibrator, usually an in-station calibrator, to verify analyzer performance. A span check is used to indicate changes in system performance and to demonstrate whether or not the instrument is performing within tolerance or control limits. Span checks may also be used to assess data for precision.

Standard Reference Material - A material (such as bottled gas or permeation tube) which has been certified as a primary standard.

Tolerance Limit - A noncalculated limit of variation set by contract, regulatory agency, or by judgement based upon experience (e.g., a known input ± some percentage).

Traceability - Refers to written documentation supporting the accuracy, relative to a primary standard, of a method, device or material, and the data it produces. Documentation must trace the history of calibrations, including dates and methods and procedures used, back to the relevant primary standard (by number, if NBS-SRM).

Transfer Standard (Secondary Standard) - A method, device, or material which is calibrated against a primary standard for comparison with a third method, device, or material.

3.0 Responsibilities

3.1 Field Technician shall:

- Be aware of and report to his supervisor circumstances that require calibration (see 5.2 and 5.3); and
- Perform field calibrations and calibration checks in accordance with this SOP and Quality Assurance Plan.

3.2 District Supervisor shall:

- Ensure the availability of proper calibration equipment and the prompt calibration of all analyzers requiring calibration;
- Review all calibration data to detect any circumstances, actions, or lack of actions that are at variance with this SOP and supporting SOPs, or that may have resulted in an unacceptable calibration; and to accept or reject the data based upon his findings; and
- Ensure that all rejected calibrations are redone promptly, and forward accepted calibration documentation to the appropriate parties (Section 5.9).

4.0 Policy

4.1 Calibrators

4.1.1 A Span Check may be performed using the following:

- In-station calibrator
- Reference calibrator

4.1.2 A multipoint Calibration Check may be performed using the following if the range of outputs is adequate.

- In-station calibrator
- Reference calibrator

4.1.3 A Calibration may be performed only with:

- Reference calibrator
- In-station calibrator, only if it has been verified against an independent transfer standard within the past three (3) months.

4.1.4 An audit may be performed only with an audit calibrator.

4.2 ERT has determined that a single-point calibration is inadequate for the proper adjustment of continuous analyzers. Thus all calibrations of continuous analyzers shall be multipoint calibrations.

4.3 Zero and Span Checks

4.3.1 Check the calibration sticker on the calibrator. If the calibrator is overdue for reverification, this situation should be reported in the logs and arrangements should be made for prompt reverification of the unit.

4.3.2 Zero checks should be performed prior to and immediately after any manual span or calibration checks.

4.3.2.1 If the analyzer response to zero air is within the tolerance limits defined in the appropriate analyzer-specific SOP, proceed with a span check.

4.3.2.2 If analyzer response is not within tolerance limits, trouble shoot to determine an assignable cause for the difference before adjusting. Possible sources of zero air contamination (filters and/or scrubbers) should be checked before analyzer zero is adjusted. When the zero response is within the tolerance limits defined in the appropriate SOP, proceed with the span check.

4.3.3 For sites where span checks are performed automatically once per day:

4.3.3.1 Permeation chamber temperature in permeation tube devices should be checked periodically as specified in the appropriate SOP.

4.3.3.2 The flow should be checked periodically and maintained at its current designated value.

4.3.3.3 Automatic span checks should be augmented by at least one manual span check every two weeks. If a systematic difference arises between automatic and manual span checks, efforts should be made immediately to determine the cause of the difference. If the cause cannot be isolated at the time the discrepancy is first noticed, the frequency of manual span checks should be doubled and efforts should be made to determine an assignable cause for the difference over a period of time. Once the cause is found and corrected, the original frequency of manual span checks may be resumed.

4.3.3.4 A manual span check should be performed whenever one or more automatic spans fall outside tolerance or control limits as defined in the appropriate SOP. If manual span checks show similar deviation, a calibration check should be performed.

4.3.4 For sites without in-station calibrator for daily automatic span checks:

4.3.4.1 Manual span checks should be performed at least once per week.

4.3.4.2 If an in-station calibrator is being used, the permeation chamber temperature (for permeation tube devices) and flow setting should be checked before beginning the span check.

4.3.4.3 If a portable calibrator is being used, ensure, before performing a span check, that adequate preparation of the calibrator has been accomplished with respect to:

- proper temperature environment,
- sufficient warm-up,
- proper chamber temperature (in permeation tube devices),
- current calibration sticker,
- complete documentation, and
- preventative maintainence (leak check) as detailed in the appropriate SOP.

4.3.5 The manual span checks should be entered in the field station log with calibrator serial number, flow setting(s), permeation chamber temperature, input concentration, and analyzer response. The strip chart should be annotated with calibrator serial number and input concentration.

4.4 A Calibration Check is required according to the following:

4.4.1 Upon installation of an analyzer in a field station.

4.4.2 After repair of a malfunctioning analyzer.

4.4.3 After replacement of major components of an analyzer (see analyzer-specific SOP).

4.4.4 Prior to removal of an analyzer from a field station, if it is still functioning.

4.4.5 When a span check tolerance limit or control limit (whichever is being used) is exceeded in two or more consecutive manual spans (assuming automatic spans are within limits), or when both manual and automatic spans show out of spec response.

4.4.6 Following the adjustment or readjustment (multipoint calibration) of the analyzer.

4.4.7 At a maximum interval of three (3) months (a performance audit can be used to meet this requirement - e.g., PSD requires audits quarterly on all analyzers).

4.4.8 When directed by an appropriate supervisor.

4.5 Before beginning a calibration check, all users of this procedure shall:

4.5.1 Ensure that adequate preparation of the calibrator has been accomplished with respect to:

- proper temperature environment,
- sufficient warm-up,
- proper chamber temperature in permeation tube devices,
- current calibration sticker,
- complete documentation, and
- preventative maintenance (leak check).

(The above are detailed in the calibrator-specific SOP).

4.5.2 If it is a start-up calibration check, the user shall be certain that adequate preparation of the analyzer has been accomplished with respect to:

- proper temperature environment,
- sufficient warm-up,
- initial measurements, and
- preventive maintenance (leak check).

(The above are detailed in the analyzer-specific calibration SOP).

4.5.3 Ensure that the analyzer response to zero air is within the tolerance limits defined in the appropriate SOP (See 4.2.2).

4.6 ERT has established tolerance limits for accuracy.

4.6.1 The maximum allowable deviation of analyzer response from input concentration is ±10%.

4.6.1.1 When analyzer responses to calibration gas in a calibration check fall outside this limit, the analyzer must be recalibrated or replaced.

4.6.2 The minimum adjustable deviation is ±5%.

4.6.2.1 When analyzer responses during a calibration check fall within this limit, the analyzer should not be adjusted.

4.6.3 When the deviation is greater than 5% but less than 10%, adjustment is optional.

4.6.4 The deviation of analyzer output from input concentration is determined by the following calculations.

4.6.4.1 Calculating the % difference at each concentration by the following formula:

$$\% \text{ difference} = \frac{(\text{Concentration})_{\text{output}} - (\text{concentration})_{\text{input}}}{(\text{concentration})_{\text{input}}} \times 100$$

4.6.4.2 Averaging the % difference for all of the concentrations.

Note: It is essential that correct signs (+ or -) be retained during calculation of average % difference.

4.6.4.3 Compare the % difference at each point with the average % difference. If the % difference at any individual point differs from the average % difference by more than 5%, run the point again. If, on this second run, the point falls within 5% of the average, accept it and recompute the average. If not, trouble shoot to determine an assignable cause for the difference. There may be problems in the analyzer or calibrator or the system as a whole that require repair.

4.7 Multipoint Calibration is required after a calibration check only if the following conditions are met.

4.7.1 The analyzer response (average % difference) in the calibration check is ±10%.

4.7.2 An assignable cause is identified and corrected.

4.7.3 An assignable cause has not been identified after all avenues for determination have been exhausted, and in the best judgement of the user of this procedure, calibration is the appropriate course of action for continuing operations. In this case the field logs, strip charts, and calibration document will be "flagged" for supervisory and/or engineering review.

4.8 Before beginning a multipoint calibration, all users of this procedure shall perform the following.

4.8.1 Attempt to determine an assignable cause for any deviation outside tolerance or control limits, and correct, if possible.

4.8.2 Ensure that adequate preparation of the analyzer has been accomplished with respect to

- proper temperature environment,
- sufficient warm-up,
- initial measurements, and
- preventive maintenance (leak check).

(The above are detailed in the analyzer-specific calibration SOP).

4.8.3 Ensure that analyzer response to zero air is within the tolerance limits defined in the appropriate SOP (see 4.2.2).

4.9 In-station calibrator verification

4.9.1 Whenever a calibration check is performed, the performance of the in-station calibrator shall be verified.

4.9.2 In-station calibrators are calibrated through the use of NBS-traceable flow and temperature devices and gas sources. In-station calibrators cannot be recalibrated in the field by transfer from a calibrated analyzer.

4.9.3 An in-station calibrator may be verified by direct comparison to the reference calibrator being used to perform the calibration check by the following procedure:

4.9.3.1 Generate identical concentrations (at or near 25% of in-station calibrator range) with the in-station calibrator and the reference calibrator and input this concentration to the analyzer alternately with each of the two devices. Allow sufficient time for the analyzer to produce a stable reading for each input.

4.9.3.2 Calculate the % difference between the analyzer response to the same concentration from the two different calibrators by the following formula.

$$\% \text{ Difference} = \left[\frac{(\text{Analyzer Output})_{\text{in-station}} - (\text{Analyzer Output})_{\text{ref.}}}{(\text{Analyzer Output})_{\text{ref.}}} \right] \times 100$$

4.9.3.3 Repeat steps 4.9.3.1 and 4.9.3.2 using a concentration at or near 75% of range.

4.9.4 ERT has established a tolerance limit describing the maximum allowable deviation of an in-station calibrator from a reference calibrator in this field verification. That tolerance limit is ±10% for each concentration generated (4.9.3.1 and 4.9.3.3).

4.9.5 If field diagnosis of the questionable in-station calibrator (deviation from reference calibrator of more than 10%) does not resolve the problem, the calibrator should be removed and returned to a calibrator repair and calibration facility.

5.0 Documentation

5.1 All calibrations and calibration checks will be fully documented in ink including all quantitative data in legible form.

5.2 All calibration and calibration check documentation will be written at the time of the calibration or calibration check on the analyzer-specific calibration forms and all sections of the forms will be completed by the operator, using "N/A" (not applicable) as needed.

STANDARD OPERATING PROCEDURE

Title: FIELD CALIBRATION OF CONTINUOUS AIR QUALITY ANALYZERS

Date: 3/1/79
Number: 003
Revision: 0

5.3 Each calibration data sheet will be a 3-part NCR form. There are a white original and pink and yellow copies. Where the 3-part form is not available, the operator shall make 3 parts by using carbon or photocopying after calibration, or other means. In any case, there will be 3 copies before distribution of data.

5.4 Appropriate documentation will be recorded on the field station log and on the strip chart. The notations on the strip chart should explain each significant deflection of the recorder pen (e.g., a calibration point, baseline, amp check, adjustment, etc.)

5.5 The calibrated analyzer will be labeled with a calibration sticker showing the analyzer S/N, the date of the calibration and the signature of the operator.

5.6 Upon completion of the calibration, documentation will be distributed as follows:

5.6.1 White original - for approval, to District Supervisor, as defined in 2.0 and designated by the supervisor of the person operating the analyzer.

5.6.2 Strip chart - when the calibration is recorded on a strip chart, the strip chart will accompany the original data sheets. The portion of strip chart to be sent will include from the start of the roll to some point after the calibration. These charts, then, will not be included in the routine data submission, and the Field Tech should so note in the next routine submission.

5.6.3 Pink copy - with the original, to District Supervisor, as is done with pink copies of regular data sheets and logs.

5.6.4 Yellow copy - retained in station or in instrument record book.

5.6.5 If the calibration is performed by someone other than the routine operators, such as a Field Service technician or engineer, then the person who performed the calibration should have a copy of his or her work. A photocopy may be made for that purpose, or the pink or yellow copy may be taken by the Field Service person, leaving the field tech responsible for making a photocopy replacement.

5.7 In the EQB operated networks, it is the Field Technician's responsibility to cut charts and transmit them to the District Supervisor with the data sheets.

STANDARD OPERATING PROCEDURE

Title:

Date: 3/1/79
Number: 004
Revision: 0

EQB Test Equipment Calibration

Prepared by

ENVIRONMENTAL RESEARCH & TECHNOLOGY, INC.
for the Puerto Rico Environmental Quality Board
Under Contract No. 68-02-2542

STANDARD OPERATING PROCEDURE

Title: Test Equipment Calibration/Repair

Date: 3/1/79
Number: 004
Revision: 0

The following equipment calibration/repair procedure applies to any piece of test equipment which is used as a secondary standard for calibration or repair of instrumentation requiring traceability to the National Bureau of Standards. This procedure does not necessarily apply to test equipment used for research and development projects.

Calibration Requirements

Test equipment shall be calibrated and/or repaired by a qualified service organization with equipment traceable to the National Bureau of Standards. Calibration will be performed at scheduled intervals with a two-week grace period for scheduling purposes. The interval will be that recommended by the manufacturer.

Calibration service organizations will be specified by the Engineering Division. The calibration service organization shall provide (1) a record of calibration data and (2) certification that the calibrations are traceable to the National Bureau of Standards.

Scheduled Calibration

Specific test equipment will be assigned to either a laboratory, an individual or District Supervisor. The location of equipment is tracked via EQB's documentation procedures. The laboratory individual or Electronics Lab Supervisor to whom equipment is assigned will be notified by the Electronics Lab whenever a scheduled equipment calibration is due. The Supervisor is responsible for arranging for replacement equipment for field personnel.

Unscheduled Calibrations or Repairs

In the event that any of the following apply, the laboratory or district office supervisor should be notified immediately and the equipment removed from service until recertification can be completed.

1) A piece of test equipment does not have a valid calibration sticker.
2) A calibration seal is broken.
3) A unit is found to be out of calibration or to require repair.

The D.O. Supervisor is responsible for arranging for replacement equipment for field personnel.

STANDARD OPERATING PROCEDURE

Title: Test Equipment Calibration/Repair

Date: 3/1/79
Number: 004
Revision: 0

New Test Equipment

Whenever a new piece of test equipment is ordered, the purchase requisition should specify "certificate of traceability to NBS required." A copy of the purchase order should be forwarded to the Instrument Records Office. Upon receipt of the equipment, the certificate should be sent to the Instrument Records Office.

Calibration Records

Associated with each piece of test equipment is an equipment Calibration/ Repair Record, Form (Attachment #1) indicating the date of the last calibration and the due date for the next calibration. These records are maintained in the Test Equipment File by instrument type and manufacturer's serial number. The specific Calibration Data Record is filed with each Equipment Calibration/ Repair Record.

Originals of calibration data and certification records must be forwarded to the AQ Lab for inclusion in the Test Equipment File.

EQB

INSTRUMENT CALIBRA..JN LABORATORY
EQUIPMENT CALIBRATION/REPAIR RECORD

S.O.P. 004 ATTACHMENT 1

SECTION A — GENERAL

Model	Serial Number	Manufacturer	Interval	Date of Acquisition

Cal. Lab.	Calibration Inst. No.	Description	Vendor	P.O. Number	Date

Notes

SECTION B — CALIBRATION MAINTENANCE RECORD

Calibration			Remarks	Repair Required		
Due	Completed	By		FRM No.	By	Date

1172a (4/79)

SECTION C — REPAIR RECORD

Date	Malfunction	Code	Corrective Action	Code	By	FRM No.	From	To

SECTION D — MODIFICATION RECORD

Date	Modification	Authorized By	Completed By

STANDARD OPERATING PROCEDURE

Title:

Date: 3/1/79
Number: 005
Revision: 0

Routine Operation of the Teco Model 43 Pulsed Fluorescent SO_2 Analyzer

Prepared by ERT for the Puerto Rico
Environmental Quality Board under
Contract No. 68-02-2542

STANDARD OPERATING PROCEDURE

Title: Routine Operation of the Teco Model 43 Pulsed Fluorescent SO_2 Analyzer

1.0 Applicability

This procedure is to be used as a supplement to SOP 001 EQB Field Site Routine Visit at those sites where SO_2 is measured with the Teco Model 43 Pulsed Fluorescence analyzer. Responsibilities and the methodology of data validation outlined in SOP 001 apply to this procedure and to the use of Status/Data Assessment Sheet 001-A.

2.0 Checks to be Performed Every Site Visit

2.1 Check that the shelter temperature is between 67°F and 78°F, and that the manifold pump and calibration controller are functioning properly. Check that the calibrator temperature is within ±0.1°C of designated. Note any adjustments in Field Station Log.

2.2 Teco 43 Checks - Note whether ball height on rotameter is between 2 and 4. If it is not, clean the flow capillary. Open the left section of the front panel. Check that pressure regulator reads 10 ± 0.1 in. Hg. Adjust if necessary using the diaphragm regulator.

2.3 SO_2 Data Checks - roll back strip chart to the time of the last visit. Check that all prior baselines are 0 ± 0.005 ppm (0.10V). If recorder has been offset 10%, allowable baseline range will be 0.9 VDC to 1.1 VDC on strip chart. Check that all spans are within ±15% of designated. Adjust baseline and/or perform manual span check to verify that instrument is now within calibration specs, if necessary.

3.0 Manual Calibration

Perform a manual zero and span check at least once a week unless specified more frequently in network QA plan.

4.0 Weekly Checks

4.1 Check that the cooling fan and pump are working. Inspect the capillary. Clean or replace if necessary. Verify that the UV lamp is working by listening for a clicking sound which indicates pulsation.

4.2 Perform PC board full scale check according to the manufacturer's manual. Also perform full scale check of output amplifier board. Note whether outputs are within specs listed on sheet.

5.0 Bi-Weekly Maintenance

Every other week change the particulate filter and indicate on the assessment sheet.

Title: Routine Operation of the Teco Model 43 Pulsed Fluorescent SO_2 Analyzer

6.0 Periodic Maintenance

Multipoint span checks should be performed according to the schedule indicated in the network QA plan, and the instrument should be recalibrated if necessary. Every 12 months the hydrocarbon cutter should be replaced and this action noted in the field station log.

7.0 Audits

The Divisional Quality Assurance Officer shall conduct audits of this procedure. Corrective action will be taken as necessary.

STATUS/DATA ASSESSMENT SHEET 001A SOP 001

TECO MODEL 43 SO_2

NETWORK:_____ STATION:_____ STATION NO.:_____

OPERATOR:_____ WEEK ENDING:_____

					DATA		
DATE:							
LOCAL STANDARD TIME:					Valid	Suspect	Invalid
	✓ or NO*						
SHELTER STATUS:							
Temp. = 67° - 78°F?							
Manifold Pump OK?							
Calibration Controller OK?							
CALIBRATOR:							
Temp. = Des. ±0.1°C							
TECO 43 STATUS:							
Flow Rate = 2 to 4 SCFH?							
Pressure at 10 ± 0.1" Hg?							
Strip Chart Time, Supply Marked?							
TECO 43 DATA:							
All Prior BLs 0 ppm ± 0.005 ppm (0.10V)							
All prior Spans ±15% of Desig.							
Entire prior chart OK?							

MANUAL CALIBRATION: DATE _____ _____

Zero = 0 ± 0.005 ppm (0.10V)? _____ _____

Calibrator Flow ± .5 mm of Des.? _____ _____

Teco output ±15% of Des.? _____ _____

WEEKLY CHECKS:

Cooling fan working?_____ Pump OK?_____ Capillaries clean?_____ UV lamp working?_____

PC Board: FS = 10 ± 0.01 Volts?_____

Output Board: FS = 10 ± 0.01 V?_____

BI-WEEKLY: Particulate filter changed? _____

*Explanations of all NO entries should appear in the field station log.

EQB Form 001-A

STANDARD OPERATING PROCEDURE

Title:

Date: 3/6/79
Number: 006
Revision: 0

MULTIPOINT SPAN CHECK/FIELD CALIBRATION OF THE TECO 43 SO_2 ANALYZER

Prepared by

ENVIRONMENTAL RESEARCH & TECHNOLOGY, INC.
for the Puerto Rico Environmental Quality Board
under Contract No. 68-02-2542

STANDARD OPERATING PROCEDURE

Title: MULTIPOINT SPAN CHECK/FIELD CALIBRATION: TECO 43 SO_2 ANALYZER

Date: 3/1/79
Number: 006
Revision: 0

A. A multipoint span check and/or field calibration is required under the following circumstances.

- routine multipoint calibration due,
- span check deviates more than 15% from its designated value,
- when requested by the field supervisor,
- routine audits, or
- following any maintenance which may cause a calibration shift (see manual) NOTE: If the in-station calibrator is a Meloy CS-10 or Teco 143 with a NBS traceable permeation tube, it may be used for field calibration.

B. Initial Calibration Check

1) Connect a DVM to the recorder output of the analyzer. Prior to the calibration, the analyzer should be electronically calibrated and pneumatically adjusted. The required components to be checked or calibrated are:

- amplifier pc board (0-10V),
- output board (0-10V),
- pressure regulator (-10in. Hg), and
- flow rate (1-4 scfh).

Refer to analyzer manual Section IV.D.1a through 1c for detailed instructions.

2) Direct the calibrator zero air into the Teco 43 analyzer. After stabilization (about 20 minutes) record the observed value. Adjust the zero to 0.00 ± .0005 ppm (0± 01V on the DVM) if necessary with the front panel zero pot. NOTE: On .5 ppm range, Volts = ppm x 20.

3) Generate the highest designated SO_2 concentration from the calibrator. After the TECO 43 output has stabilized, record the designated and observed outputs on the enclosed form. Do not make any adjustments to the Teco 43 analyzer at this point.

4) Generate other designated concentrations of span gas from the calibrator. After stabilization at each point, record the designated and observed outputs. Then, repeat Step 2.

STANDARD OPERATING PROCEDURE

Title: MULTIPOINT SPAN CHECK/FIELD CALIBRATION: TECO 43 SO_2 ANALYZER

5) Calculate the absolute percentage deviation at all test points, using the following equation:

$$\% \text{ deviation} = \frac{\text{Des(ppm)} - \text{Obs(ppm)}}{\text{Des(ppm)}} \times 100$$

where
Des. = designated
Obs. = observed

6) If the absolute deviation is within 10%, it is optional to perform the adjusted calibration. If the in-station calibrator was used for the multipoint check, return the calibrator to Remote position and set the rotameter to ball height back to the designated daily span check setting. Be sure the analyzer is sampling ambient air from the shelter manifold.

7) If any of the absolute percentage deviations is greater than 10%, proceed to step C, Adjusted Calibration. If any of the absolute percentage deviations is greater than 30%, consult your District Superviser before proceeding with the calibration.

C. Adjusted Calibrations

1) Direct the calibrator's highest designated concentration of span gas into the analyzer sample port.

2) After the analyzer output has stabilized, unlock the analyzer span pot, adjust the span pot so that the analyzer reads the designated values ±5%.

3) After the adjustment on the span pot, repeat the zero baseline check, readjust if necessary.

4) Repeat step 1 through 3 until no further adjustment is required on both zero and span pot.

5) Generate the calibrator's other designated concentrations of span gas. Refer to 40 CFR 58 Appendix A.

6) Let the analyzer sample the calibration gas for 20 minutes at each designated test point.

7) Record the stable reading on the form provided. NOTE: No adjustment should be made after step 4.

8) Calculate the absolute percent of deviation on all the designated test points as in step B5.

9) If the absolute deviation is less than 5% at all test points, field multipoint calibration is completed.

STANDARD OPERATING PROCEDURE

Title: MULTIPOINT SPAN CHECK/FIELD CALIBRATION: TECO 43 SO_2 ANALYZER

Date: 3/1/79
Number: 006
Revision: 0

10) If the absolute deviation is more than 5% on any point, repeat the adjusted multipoint calibration. If the repeated adjusted multipoint calibration still cannot meet the specification, then report to field supervisor for further instruction.

11) If the in-station calibrator is being used, return the calibrator to Remote position. Set the rotameter ball height on the calibrator back to the designated daily span check setting. Return the analyzer to sample ambient air.

D. Mark any pertinent comments on EQB Form 006-A, sign and date it, and return copies as follows.

1) Return in data package with strip charts (The Scientific Inventories and Reports Division will foreward to QA coordinator).

2) Return to District Office.

3) Retain and file at site.

Affix a calibration sticker to the instrument.

E. Quality Assurance Audit

The Divisional Quality Assurance Officer will conduct periodic audits of this procedure. Corrective action will be taken as necessary.

FIELD CALIBRATION

S/N:_____ ERT No._____

Reason for calibration:_____

Multipoint calibrator:_____ S/N_____

PC Board check output: _____ V

Output Board check output: _____

Pressure adjusted pressure: _____ in Hg

Flow rate: _____ scfh

EQB FORM 006-A

EQB

Network _____ Site _____ Instrument Type _____ S/N _____ Date _____

Calibrator: Type _____ S/N _____ Last Cal Date _____ Temp: Des _____ °C Obs _____ °C

DVM: Mfg and Model _____ S/N _____ Last Cal Date _____

Complete where Applicable: Initial: zero pot _____ span pot _____

Final: zero pot _____ span pot _____

Flow Setting	Flow (ℓ/min)	Input Concentrations V_D (0–10V)	Input Concentrations PPM_D (D)*	Unadjusted Readings (Obs) V_o (0–10V)	Unadjusted Readings (Obs) PPM_o (O)*	Adjusted Readings (Obs) V	Adjusted Readings (Obs) PPM_o (O)*	Adjusted Readings (Obs) V	Adjusted Readings (Obs) PPM_o (O)*	Δ%* (⩽ 10%)
Zero Air			0±.005							

In-Station Calibrator S/N _____

Avg. Δ% =

In-Station Calibrator Verification:

	Reference Calibrator			In-Station Calibrator				
	Flow Setting	Analyzer Response (D)* Volts	Analyzer Response (D)* PPM	Flow Setting	Analyzer Response (O)* Volts	Analyzer Response (O)* PPM	Δ%*	(⩽±10%)
TP1								
TP2								

*Δ% = $\left[\frac{O - D}{D}\right]$ x 100

Signature: _____

Q.C. Review _____

Accepted ☐ Rejected ☐

1772 (12/78)

EQB

CALIBRATION CURVE

Network: _____ Date: _____

Site: _____ Time: _____

Site No.: _____ Analyzer S/N: _____

Operator: _____ Calibrator S/N: _____

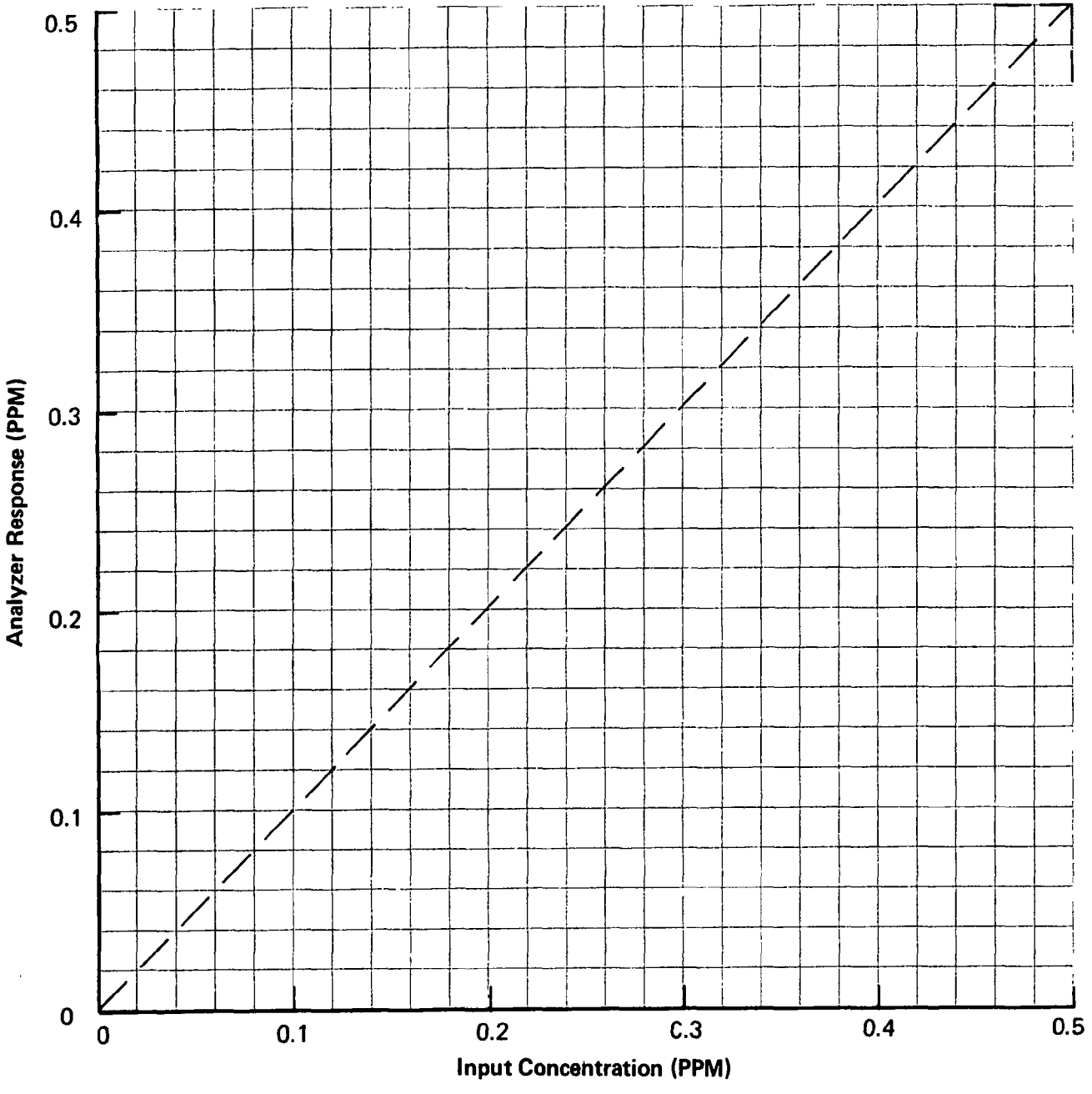

1773 (12/78)

STANDARD OPERATING PROCEDURE

Title:

Date: 3/1/79
Number: 007
Revision: 0

ROUTINE SITE VISIT AND PERIODIC MAINTENANCE
OF THE BENDIX 8501-5CA CO ANALYZER

Prepared by

ENVIRONMENTAL RESEARCH & TECHNOLOGY, INC.
for the Puerto Rico Environmental Quality Board
Under Contract No. 68-02-2542

STANDARD OPERATING PROCEDURE

Title: ROUTINE SITE VISIT AND PERIODIC MAINTENANCE OF BENDIX 8501-5CA CO ANALYZER

Date: 3/1/79
Number: 007
Revision: 0

1.0 Applicability

1.1 Applicability. This SOP addresses sites where carbon monoxide is measured using the Bendix 8501-5CA. This procedure is to be used as a supplement to SOP 001 EQB Field Site Routine Visit.

2.0 Data Validity and Instrument Status

2.1 The Status/Data Assessment Sheet 001-B is to be filled out at least once each week.

2.2 The check-off procedure requires the entering of a check (✓), indicating YES, or a NO for each item. The entering of a NO often indicates that on-site corrective action or notification of district personnel for corrective action assistance is required. The appropriate action should be taken and stated in the field station log.

2.3 Spaces are provided on the sheets for identifying data as valid, suspect, or invalid. The field technician is required to classify all data obtained during the week, by date and time, based on the criteria listed and THE BEST JUDGMENT OF THE FIELD TECHNICIAN.

3.0 Routine Checks (each site visit)

3.1 Bendix 8501-5CA CO Analyzer (Status/Data Assessment Sheet)

3.1.1 Status - Verify that strip chart time is accurate, supply is adequate until next visit, and date and time of visit are clearly marked. Check that sample flow is set at ball height 3.0 and pressure of calibration gases are greater than 300 psi. NOTE: If ball height requires adjustment see Paragraph 4.1.2 before adjusting.

3.1.2 Data - Verify that all prior zeros are between 8% and 12% of full recorder scale (0 ± 1 ppm) and all prior spans are within ±5% of designated span value. If not, does manual recalibration correct the problem? (See weekly checks.)

NOTE: This instrument is run with a zero instrument baseline and a 10% baseline offset on the recorder. Thus, the full scale on the recorder will be 45 ppm.

3.1.3 If the unit is not capable of automatic zero and span, these functions should be performed manually at each visit and results indicated under status. See weekly checks for calibration procedure.

STANDARD OPERATING PROCEDURE

Title: ROUTINE SITE VISIT AND PERIODIC MAINTENANCE OF BENDIX 8501-5CA CO ANALYZER

Date: 3/1/79
Number: 007
Revision: 0

4.0 Weekly Checks

4.1 Perform the checks indicated on the assessment sheet. Drain any condensate in the glass bowl containing the sample filter. Normal replacement interval is once a month for the sample filter and once every six months for the gas filter. Note filter replacements in the log. Perform a manual calibration as follows.

4.1.1 With instrument in the 50 ppm (Normal Operational) range, set mode selector valve to zero.

4.1.2 Note if ball height is 3.0 ± 1 cm. Do not readjust at this time. Complete steps 4.1.3-4.1.5. Then readjust flow to Ball Height 3.0 and complete steps 4.1.6-4.1.8.

4.1.3 After the output has stabilized, put filter switch to out position. Verify that noise extreme is 0.2 VDC or less.

4.1.4 Return filter switch to in and record initial zero as read on a DVM. Make no adjustment.

NOTE: On 50 ppm range, PPM=VDC X 5.

4.1.5 Turn mode selector valve to span. After instrument output has stabilized, record SPAN value as read on a DVM and converted to ppm. If ball height was 3.0 ± 1 cm and initial zero is 0 ± 1 ppm and initial span is within ±5% of the tank concentration, the instrument is in calibration. If the readings are outside these limits, proceed to step 4.1.6.

4.1.6 Turn mode selector valve to zero. After stabilization, reset zero adjust to obtain a zero ±1 ppm output.

4.1.7 Turn mode selector valve to span. After stabilization, reset span adjust to obtain an output equivalent to the designated cylinder output ±5%.

4.1.8 Return mode selector valve to zero and check that output after stabilization is as set in step 4.1.6. If it is not, repeat steps 4.1.6 through 4.1.8 until stable readings are obtained. Note that final values are in spec and the previous and current settings for zero and span pots.

NOTE: Calibrations should be performed only with certified cylinders of gas.

5.0 Quality Assurance Audit

The Divisional Quality Assurance Officer will conduct periodic audits of the procedure discussed above and corrective action will be taken as necessary.

STATUS/DATA ASSESSMENT SHEET

BENDIX 8501-5CA-CO ANALYZER

NETWORK_____ STATION_____ STATION NUMBER_____

OPERATOR_____ WEEK ENDING_____

DATE ___ ___ ___ ___

LOCAL STANDARD TIME ___ ___ ___ ___

	✓ or NO*				DATA VALID (Show date and time for each category)	DATA SUSPECT (Show date and time for each category)	DATA INVALID (Show date and time for each category)
SHELTER STATUS: Temp. (67-78°F)	___	___	___	___			
Manifold Pump OK?	___	___	___	___			
BENDIX CO STATUS: S/N_____							
Strip Chart time, supply marked?	___	___	___	___			
Sample flow = 3.00 ± 1 cm?	___	___	___	___			
Cal. Gases > 300 psi?	___	___	___	___	___	___	___
DATA: Strip chart?	___	___	___	___			
All prior Os 8-12%?	___	___	___	___			
All prior spans ±5% of Des.?	___	___	___	___			
If not, is recal. OK?	___	___	___	___			
Entire prior chart OK?	___	___	___	___	___	___	___
NORMAL CONDITIONS?	___	___	___	___			

WEEKLY CHECKS

BENDIX CO

Back pressure ± 1 psi of Des.?_____

Sample filter clean?_____ Gas filter clean?_____

Manifold connections tight?_____ Vent lines unobstructed?_____

Unfiltered noise < 0.2V?_____

CALIBRATION:

Initial: Zero_____ppm Span_____ppm

Final: Zero = 0 ± 1 ppm?_____ Span = Des. ppm ± 5%?_____

Zero Pot. Prev./Current_____/_____ Span Pot. Prev./Current_____/_____

*Explanation of all NO entries should appear in field station log.

EOB Form 001-B

STANDARD OPERATING PROCEDURE

Title:

Date: 3/1/79
Number: 008
Revision: 0

Routine Operation And Maintenance of the Dasibi Model 1003 Ozone Analyzer

Prepared by ERT for the Puerto Rico
Environmental Quality Board Under
Contract No. 68-02-2542

STANDARD OPERATING PROCEDURE

Title: Routine Operation And Maintenance of the Dasibi Model 1003 Ozone Analyzer

Date: 3/1/79
Number: 008
Revision: 0

1.0 Applicability

This procedure is to be used as a supplement to SOP 001, EQB Field Site Routine Visit at those sites where ozone is measured with the Dasibi Model 1003-PC Ozone Monitor. This SOP includes both routine operation and maintenance of the instrument. There is practically no reason to remove the instrument from the shelter since it is relatively easy to maintain.

2.0 Checks to be Performed Every Site Visit

2.1 Check that the shelter temperature is between 67°F and 78°F and that the manifold pump is functioning properly.

2.2 Ozone Data Checks - Roll back strip chart to time of last visit, check for any indications of noisy operation and verify chart time. Instrument's zero offset should be recorded on strip chart.

2.3 Sample flow - The front panel flowmeter should read 2 l/min. Tap the flowmeter to make sure the float is not stuck and is actually reading the proper value.

2.4 Span - Turn the mode switch to SPAN, record the readout value from the front panel. The first three digits of the display should agree with the first three span set switches.

2.5 Analog span - With the mode switch still in SPAN, read the analog value off of the strip chart recorder. If SPAN is 54.950 then the recorder should read 9.50. If it does not, adjust to the proper value. A record of SPAN numbers should be kept with all data to serve as a reference should it ever be necessary to adjust data later.

2.6 Control Frequency - Switch the mode switch to CONTROL FREQ and record the value. The reading should be between 23.0 and 28.0, if below 23.0, adjust to 27.5 by repositioning detector. Refer to manual, Section 2.3.5.

2.7 Sample Frequency - Switch to SAMPLE FREQ. and record the value. Reading should be between 35.0 and 48.0. If below 35.0 the optics need to be cleaned.

2.8 Zero Check - Switch to ZERO. The zero offset pot should be at zero. Check the recorder to make sure that it is actually recording zero. If it is not, adjust the recorder zero or the instrument zero as described in the operation section. If a zero adjustment is made repeat part 2.5 above.

2.9 Make sure all sample and manifold lines are connected as they should be, especially if a calibration or repair has just been completed. Check that the function switch is in the OPERATE mode.

STANDARD OPERATING PROCEDURE

Title: Routine Operation and Maintenance of the Dasibi Model 1003 Ozone Analyzer

Date: 3/1/79
Number: 008
Revision: 0

3.0 Monthly Checks

3.1 Measure power supply voltages on mother board:

+5VDC	±0.25V
±15VDC	±0.75V
±24VDC	±1.2V
±200VDC	±20V

3.2 Cycle time adjust. Check cycle time by observing each time the L.E.D. in the upper left hand corner of the display flashes. It should be more than 20 seconds and less than 30 seconds. If necessary, adjust R8 on the timing circuit board.

3.3 Measure temperature control voltage on mother board;

2.9VDC ±.2V	(old style)
4.4VDC ±.2V	(new style)

3.4 Adjust analog zero by connecting DVM to recorder output terminals. Put mode selector switch in zero. Adjust recorder output with R3 on D/A board.

3.5 Move mode switch to span. The first 3 digits of the display should agree with the first three span set switches. Connect DVM to recorder terminals. Voltage displayed on DVM should be the same as the last 3 digits on the analyzer display. (Example: span reading is 54.590. DVM should read 9.50 volts ± .1V.)

3.6 Move mode switch to sample frequency. Reading should be between 35.0 and 48.0. If it is too high, adjust UV lamp. If it is too low, clean optics. If it is still too low after the optics have been cleaned, adjust the UV lamp. If the reading is too low after UV lamp has been adjusted, the lamp should be replaced. (see manual)

3.7 Move mode switch to control frequency. Reading should be between 23.0 and 28.0. If it is either too high or too low, adjust control detector. (see manual)

3.8 Move mode switch to operate. Disconnect power to valve and sample pump. Make sure the zero offset swtich is at the zero position. Remove the 3 jumpers on the logic board.

Observe the following sequence on the display.

a) Resets to zero and pauses.
b) Counts up to the present span number and pauses.
c) Counts down to some number close to .005 and pauses.

Allow the analyzer to complete several cycles. The displayed number should not change more than ±2 digits. Find the average of the cycles (ex: .049, .047, .046, .050, .049 = .048).

STANDARD OPERATING PROCEDURE

Title: Routine Operation and Maintenance of the Dasibi Model 1003 Ozone Analyzer

Date: 3/1/79
Number: 008
Revision: 0

3.9 Subtract .050 from the average. (Ex: .048 - .050 + -.002.) This is the analyzer zero offset. In this case it is -2PPB. Affix a card displaying this number on the analyzer's front panel.

3.10 Reconnect power to sample pump and valve.

3.11 System Leak Check - Remove the sample line from the rear fitting and hold your finger over the fitting opening. The flow, as indicated on the rotameter, should drop to zero. If it does not, there is a leak in the system which must be closed off.

3.12 Solenoid Valve Leak Check - Remove the scrubber. Block the ell connector on the side of the solenoid where the scrubber was connected (your finger will do). Watch the flowmeter and notice that the flow drops to zero for 1/2 of the measurement cycle and returns to its original flow for the other half.

Now block the tee on the other side of the solenoid where the other side of the scrubber was connected and at the same time block the sample inlet connector. If the flow does not drop all the way to zero, there is a leak across the solenoid and it should be replaced.

3.13 Scrubber Efficiency Check - Turn on the built-in ozone source, direct its output to the analyzers inlet, and adjust it until the monitor reads between 0.5 and 1.0 ppm. The ozonator need not be stabilized for this test so there is no need to wait for the source to warm up. Once the instrument is reading ozone, switch the mode switch to SAMPLE FREQ. When the instrument is reading sample frequency, record at least 5 consecutive readings in order to find a good average. After the last reading, switch the ozonator off but leave the air flow on and take 5 more readings. Average these 5 readings and subtract the first average from the number thus obtained. If you did not notice any drift in the frequency while you were recording the numbers, then the difference between the two averages represents how much ozone is contained in the reference (zero) gas. The scrubber efficiency should be better than 96%. If not, replace scrubber.

3.14 Replace particulate filter.

STATUS/DATA ASSESSMENT SHEET

DASIBI MODEL 1003 O_3 MONITOR

Form 001-C

NETWORK:_____ STATION:_____ STATION NO.:_____

OPERATOR:_____ WEEK ENDING:_____

					DATA		
DATE:							
LOCAL STANDARD TIME:					Valid	Suspect	Invalid
	✓ or NO*						
SHELTER STATUS:							
Temp. = 67° - 78°F?							
Manifold Pump OK?							
DASIBI DAILY CHECKS:							
Sample Flow 2 ℓ/min							
Span No. - 54.950							
Control Frequency between 23.0 and 28.0							
Sample Frequency between 35.0 and 48.0							
Zero Offset Pot							
Zero Check							
Lines Connected Properly							
DASIBI MONTHLY CHECKS							
Mother Board Voltages							
+5VDC ± 0.25V							
±15VDC ± 0.75V							
±24VDC ± 1.2V							
±200VDC ± 20V							
Cycle Time between 20 and 30 sec							
Temperature Control Voltage							
Analog Zero							
Span = 54.950							
Sample Frequency between 35.0 and 48.0							
Control Frequency between 23.0 and 28.0							
Determine Zero Offset							
System Leak Check							
Solenoid Valve Leak Check							
Scrubber Efficiency >96%							
Replace Particulate Filter							

*Explanation of all NO entries should appear in field station log

STANDARD OPERATING PROCEDURE

Title:

Date: 3/1/79
Number: 009
Revision: 0

Routine Field Operation of the Meloy CS-10 SO_2 Calibrator

Prepared by ERT for the Puerto Rico Environmental Quality Board under Contract No. 68-02-2542

STANDARD OPERATING PROCEDURE

Title: Routine Field Operation of the Meloy CS-10 SO_2 Calibrator

Date: 3/1/79
Number: 009
Revision: 0

1.0 Applicability

This procedure is to be used as a supplement to SOP's 001-006 EQB Field Routine Visit, and 2000-224 Multipoint Span Check/Field Calibration: Teco 43 SO_2 Analyzer at those sites where the Meloy CS-10 is used as the in-station calibrator for the Teco Model 43 Pulsed Fluorescence SO_2 Analyzer.

2.0 Checks to be performed every site visit: Verify that ball height is at designated value. Verify that cooling fan and pump are operating and check if temperature control pilot lamp is flashing, indicating oven is at proper temperature. (Note nonflashing lamp may be due to defective lamp and not to improper oven temperature - replace lamp to verify this case.)

3.0 Maintenance. The calibrator will be overhauled and calibrated every six months according to SOP 013.

4.0 The Divisional Quality Assurance Officer will conduct audits of this procedure. Corrective action will be taken as necessary.

APPENDIX C

ELECTRONIC LAB SOPs

STANDARD OPERATING PROCEDURE

Title:

Date: 3/1/79
Number: 010
Revision: 0

CALIBRATION OF STRIP CHART RECORDERS

Prepared by

ERT for the
Puerto Rico Environmental Quality Board
under Contract No. 68-02-2542

STANDARD OPERATING PROCEDURE

Title: CALIBRATION OF STRIP CHART RECORDERS

Date: 3/1/79
Number: 010
Revision: 0

1.0 Applicability

1.1 General

The following strip chart recorder calibration procedure applies to any strip chart recorder used for data recording in the EQB monitoring network. Detailed procedures for recorder calibrations are available in the manufacturer's instruction manual and are not covered in this document.

1.2 Scheduled Calibrations

Recorder calibrations will be performed at six month intervals with a two week grace period for scheduling purposes unless otherwise specified in the program requirements.

1.3 Unscheduled Calibrations

In the event that any of the following applies, the unit should be recalibrated and a new calibration sticker affixed.

A. A recorder does not have a valid calibration sticker.

B. A recorder is found to be out of calibration or has been repaired in the field.

2.0 Required Test Equipment

Voltage Source - Datel DVC 8500 or equivalent

3 1/2 Digit Multimeter - Fluke 8000A or equivalent

3.0 Supporting Documents

Manufacturer's Recorder Instruction Manuals.

4.0 Calibration Procedure

4.1 Data Sheet Information

4.1.1 Calibration data will be recorded on Form 010-A (copy attached). Space is available for three channels; for units with more than three channels use two or more sheets.

4.1.2 Readings will be taken at zero, mid scale, and full scale. Determine and log the chart reading which corresponds to each of these points. (For example the chart readings will be 0, 5.0 and 10.0 for 0-10 volt chart paper; for -22° to +122° paper they will be -22°, +50°, and +122°.)

STANDARD OPERATING PROCEDURE

Title: CALIBRATION OF STRIP CHART RECORDERS

Date: 3/1/79
Number: 010
Revision: 0

4.1.3 Determine and record the designated input current or voltage for each of these points.

Note: If a current source is not available for current input recorders, a voltage input may be determined by multiplying the internal recorder resistance by the current input. Example - An A601C recorder has an internal resistance of 1400 ohms and an input range of 0-1 milliamp. This corresponds to a voltage input of 0-1.4 volts.

4.1.4 Determine the "Tolerance" in the same units (voltage or current) as the designated input and log on the data sheet. The tolerance is listed in the manufacturer's manual usually as a percent of full scale accuracy.

4.1.5 Write down all other pertinent information on the data sheet.

4.2 Calibration Measurements

To obtain a reading, input the signal required to allign the pen with the desired chart division and log the multimeter reading.

4.2.1 Record the initial current or voltage necessary to drive the pen to the designated chart readings.

4.2.2 Make any necessary adjustments as described in the recorder instruction manual.

4.2.3 Record the final input used to align the pen to the designated chart reading. If these are not within tolerance of the designated input, arrange to repair or replace the recorder.

4.3 Affix a properly filled out calibration sticker to the recorder and return form copies as follows.

1) - Return with week's data.

2) - Forward to district office.

3) - Retain at site.

5.0 Quality Assurance Audit

The Divisional Quality Assurance Officer will conduct audits of the data generated under this procedure. Corrective action will be taken as necessary.

STRIP CHART RECORDER CALIBRATION

NETWORK NAME _____ PROJECT NO. _____

SITE NAME _____ DATE _____

RECORDER TYPE _____ S/N _____ OPER: _____

CHANNEL	INPUT RANGE	CHART RANGE	PARAMETER
1			
2			
3			

CHANNEL	% SCALE	CHART READING	DESIGNATED INPUT	TOLERANCE	INITIAL INPUT	FINAL INPUT
1	0%					
	∿50%					
	100%					
2	0%					
	∿50%					
	100%					
3	0%					
	∿50%					
	100%					

TEST EQUIPMENT

TYPE	SERIAL NO.	CAL DUE DATE

EQB FORM 010-A

STANDARD OPERATING PROCEDURE

Title:

Date: 3/1/79
Number: 011
Revision: 0

LABORATORY CALIBRATION AND STABILITY CHECK FOR THE TECO 43 PULSED FLUORESCENT SO_2 ANALYZER

Prepared by ERT for the Puerto Rico
Environmental Quality Board under
Contract No. 68-02-2542

STANDARD OPERATING PROCEDURE

Title: LABORATORY STABILITY TEST FOR TECO 43 PULSED FLUORESCENT SO_2 ANALYZER

Date: 3/1/79
Number: 011
Revision: 0

1.0 Applicability

The SOP applies to the laboratory checkout and calibration of Teco Model 43 SO_2 analyzers.

2.0 Supporting Materials

Digital Multimeter (Fluke 8000 or equivalent)
Multipoint SO_2 calibrator
Teco 43 manual

3.0 Pre-Start-Up Inspection

1) Put the instrument on the bench.

2) Remove the instrument cover, thus exposing the internal components of the instrument.

3) Remove the foam insert over the pump.

4) Check for possible damage during shipment.

5) Slide out the front panel electronics drawer and check that the three printed circuit boards are secured in their connectors.

6) Inspect all the tubing connections, ensure that they are leak tight.

7) Remove all foreign material from the instrument.

8) If the sample/zero/span mode is controlled externally, then bypass the zero/span valve and sample valve, and connect the 1/4 " teflon tubing from sample port directly to the permeation dryer.

4.0 Start-Up Inspection Procedure and Adjustment

1) Install the analyzer in the rack with cover off.

2) Connect laboratory zero air or external calibrator zero air to the analyzer sample port.

3) Turn mode control on front panel to sample and range to 0.50.

4) Connect the recorder output to a 0-10v recorder and a DVM.

5) Verify that the front panel power switch is off.

6) Plug the instrument power cord to 115 V power outlet.

7) Turn the instrument power switch on.

STANDARD OPERATING PROCEDURE

Title: LABORATORY STABILITY TEST FOR TECO 43 PULSED FLUORESCENT SO_2 ANALYZER

Date: 3/1/79
Number: 011
Revision: 0

8) Inspect the pump for proper operation.

9) Inspect the UV lamp for pulsations.

10) Adjust the sample pressure regulator to 10.in. Hg.

11) Verify the front panel rotameter ball height is between 2 to 4 scfh and is stable.

12) Verify that the chassis cooling fan is on.

13) Slide the electronic unit forward in its housing and locate the two toggle switches on the top of the first pc board.

14) Move the first toggle (F.S.) switch (SW2) to the right position.

15) Verify that the jumper wire on the output board is connected from the center position to the 10 voltage output terminal.

16) The front panel meter should indicate a full-scale reading, the recorder and DVM output should be 10VDC.

17) If the output is other than 10v full scale, refer to Manual Section IV.D.1 for electronic adjustment.

18) Return first toggle switch (F.S.) on amp. board to left (run) position.

19) Verify the second toggle switch (SWI) on the amp board is in the center position.

20) If any of these tasks cannot be completed remove the instrument for evaluation and repair. Use instrument manual as guideline.

5.0 Calibration and Stability Test

Instrument control settings

Mode switch: sample position.

Range ppm switch: 0.50 ppm.

Full scale switch, SW2: left position.

Time response switch; SW1: center position.

1) Verify that laboratory zero air or external calibration line is connected to the analyzer's sample port.

2) Offset the analyzer baseline to 5% on the recorder.

STANDARD OPERATING PROCEDURE

Title:

Date: 3/1/79
Number: 011
Revision: 0

3) Set the instrument to sample zero air for at least 6 hours or overnight.

4) Inspect the recorder trace after Step 3. If the difference between maximum and minimum output is less than 0.2VDC and it is not cyclic, then proceed to Step 5. If it is more than 0.2VDC and erratic, locate the cause and resolve it before proceeding to Step 5.

5) Reset the baseline to 0±0.01 VDC on the instrument.

6) Disconnect the zero air line from the sample port and connect the laboratory SO_2 calibration gas line or external SO_2 gas line to the sample port.

7) Generate approximately 0.35 ppm of SO_2 from the laboratory calibration system or from the external reference calibrator.

8) Let the analyzer sample the calibration gas for 20 minutes or until a stable trace is established on the recorder chart.

9) Adjust the analyzer span pot to read the calibration gas concentration ±5%.

10) Lock the span pot at that setting.

11) Let the analyzer sample the calibration gas at least 6 hours or overnight.

12) If the recorder trace is stable after Step 12, and the maximum and minimum deviation is less than 0.2 DCV and is not cyclic, then proceed to Step 13. If the recorder trace is erratic and there is more than 0.2VDC deviation, locate the causes and repair it, then repeat Step 11.

13) Adjust the analyzer if necessary to read the concentration of calibration gas ±5%.

14) Disconnect the calibration gas line and connect the zero gas line. Let the analyzer sample 20 minutes of zero air.

15) Readjust the zero baseline if necessary. Repeat the calibration at 0.35 ppm and zero baseline until there is no further adjustment.

16) Generate a set of concentrations from the laboratory calibration system or from the external reference calibrator. The concentrations should be approximately

a) 0.300 ppm SO_2
b) 0.225 ppm SO_2
c) 0.150 ppm SO_2
d) 0.075 ppm SO_2

STANDARD OPERATING PROCEDURE

Title:

Date: 3/1/79
Number: 011
Revision: 0

17) Let the analyzer sample 20 minutes at each concentration and record the stable reading.

18) If the absolute deviation on each concentration is less than 10% of the designated values, the analyzer can be cleared from the rack. If the absolute deviation on any concentration is more than 10% of the designated values, repeat the multipoint calibration. If the repeated multipoint calibration still cannot meet the specification, remove the instrument from the rack, locate and repair the problem, then repeat the stability test and calibration from the beginning.

19) Affix a properly filled out calibration sticker to the instrument.

20) The divisional Quality Assurance Officer will conduct periodic audits of this procedure. Corrective action will be taken as necessary.

LABORATORY CALIBRATIONS AND STABILITY TEST FOR TECO 43

S/N: _____ ERT NO.: _____

Date start: _____ Operator: _____

Pre-start up inspection O.K. _____

Pump O.K. _____ UV Lamp O.K. _____

Sample pressure _____ in Hg

Flow rate: _____ scfh.

PC board O.K. _____ (10v full scale)

Output board O.K. _____ (10v full scale on recorder)

Baseline stability: _____

_____

_____ Deviation: _____

Baseline @ _____ V.

Span stability: _____

_____

_____ Deviation: _____

EQB FORM 011-A

EQB

Network _____ Site _____ Instrument Type _____ S/N _____ Date _____

Calibrator: Type _____ S/N _____ Last Cal Date _____ Temp: Des _____ °C Obs _____ °C

DVM: Mfg and Model _____ S/N _____ Last Cal Date _____

Complete where Applicable: Initial: zero pot _____ span pot _____

Final: zero pot _____ span pot _____

Flow Setting	Flow (ℓ/min)	Input Concentrations V_D (0–10V)	Input Concentrations PPM_D (D)*	Unadjusted Readings (Obs) V_o (0–10V)	Unadjusted Readings (Obs) PPM_o (O)*	Adjusted Readings (Obs) V	Adjusted Readings (Obs) PPM_o (O)*	Adjusted Readings (Obs) V	Adjusted Readings (Obs) PPM_o (O)*	Δ%* (⩽ 10%)
Zero Air			0±.005							

In-Station Calibrator S/N _____

Avg. Δ% =

In-Station Calibrator Verification:

	Reference Calibrator			In-Station Calibrator				
	Flow Setting	Analyzer Response (D)* Volts	Analyzer Response (D)* PPM	Flow Setting	Analyzer Response (O)* Volts	Analyzer Response (O)* PPM	Δ%*	(⩽±10%)
TP1								
TP2								

$$*\Delta\% = \left[\frac{O - D}{D}\right] \times 100$$

Signature: _____

Q.C. Review _____

Accepted ☐ Rejected ☐

1772 (12/78)

EQB

CALIBRATION CURVE

Network: _____ Date: _____

Site: _____ Time: _____

Site No.: _____ Analyzer S/N: _____

Operator: _____ Calibrator S/N: _____

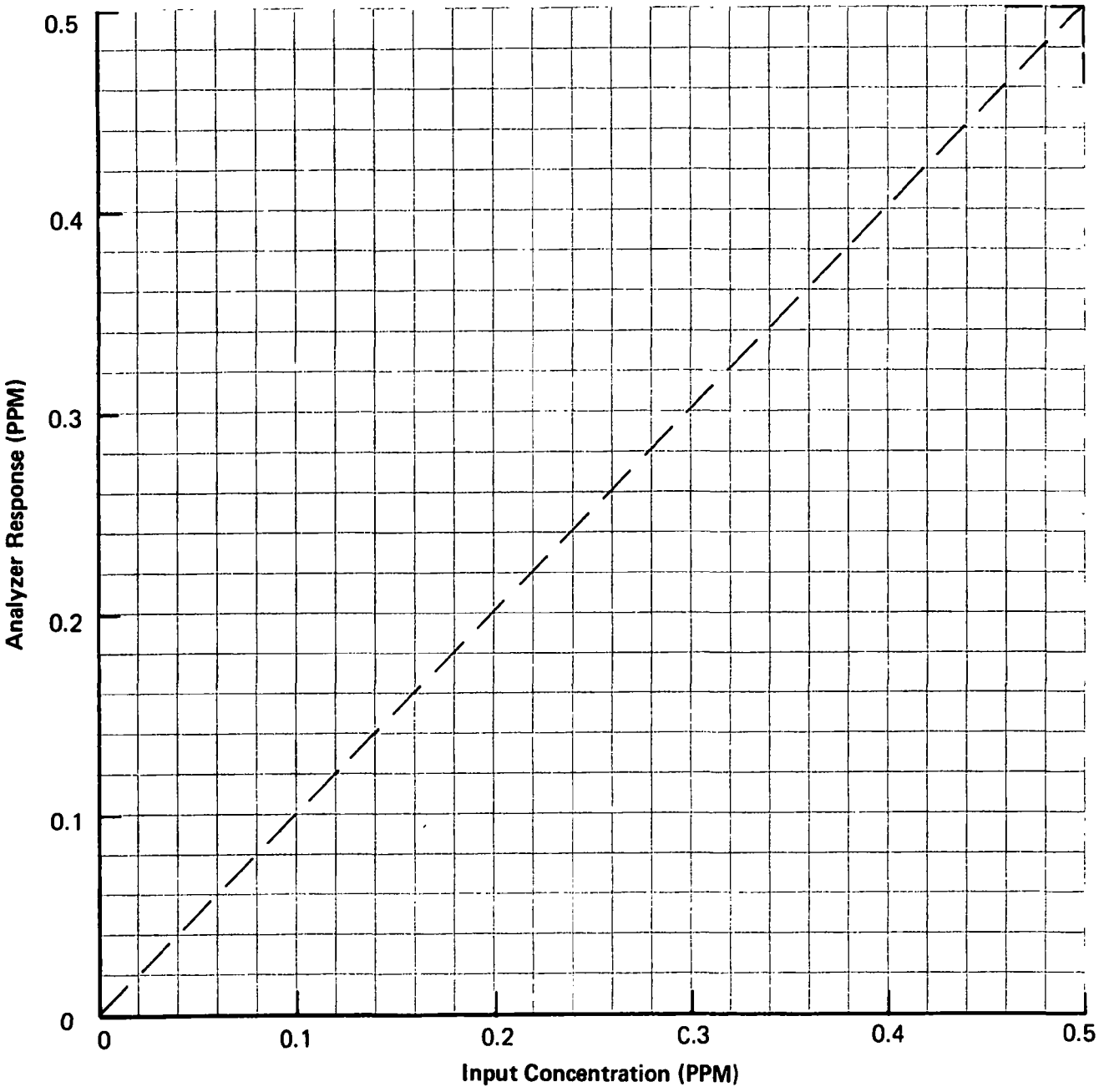

STANDARD OPERATING PROCEDURE

Title:

Date: 3/1/79
Number: 012
Revision: 0

Laboratory Calibration and Stability Check For The Bendix 8501-5CA CO Analyzer

Prepared by ERT for the Puerto Rico Environmental Quality Board under Contract No. 68-02-2542

STANDARD OPERATING PROCEDURE

Title: Laboratory Calibration and Stability Check For the Bendix 8501-5CA CO Analyzer

Date: 3/1/79
Number: 012
Revision: 0

1.0 Applicability

This SOP applies to the laboratory overhaul, checkout, and calibration of the Bendix 8501-5CA Infrared Gas Analyzer. This should be conducted semi-anually. The adjustment and calibration are also applicable in field use.

2.0 Supporting Materials

Digital Multimeter (Fluke 8000 or equivalent)
Oscilloscope
Laboratory calibration system (span gas dilution system or bottled CO in required concentrations)
8501-5CA manual

3.0 Pre-start up

3.1 Put the instrument on the bench.

3.2 Remove the instruments two front covers, thus exposing the internal components.

3.3 Check for possible damage during shipment - i.e. loose pc board etc.

3.4 Slide out optical bench drawer and inspect for visible damage.

3.5 Inspect all the tubing connections, ensure that they are leak tight.

3.6 Remove all foreign material from the instrument.

3.7 Replace input sample filter and gas filter.

4.0 Start Up Inspection Procedure

4.1 Install the analyzer in the rack with covers off.

4.2 Connect laboratory zero air or external calibrator zero air to the analyzer sample port.

4.3 Connect external calibration source of CO at a 1000 ppm concentration.

4.4 Connect the recorder output to a 0-10V recorder and a DVM.

4.5 Verify that the front panel power switch (in range selector) and pump switch are in off position.

4.6 Plug the instrument power cord to 115V power outlet (grounded).

4.7 Turn the pump switch on.

4.8 Inspect the pump for proper operation, refer to manual section 5.2.3.

STANDARD OPERATING PROCEDURE

Title: Laboratory Calibration and Stability Check for the Bendix 8501-5CA CO Analyzer

Date: 3/1/79
Number: 012
Revision: 0

5.0 Adjustment

5.1 Turn the instrument on and allow it to stabilize for eight hours (a minimum of two hours) prior to proceeding with adjustment procedures.

5.2 Slide the optical bench drawer forward on its track.

5.3 Refer to the enclosed "Bendix 8501-5CA Infrared CO Analyzer Adjustment Checklist." Put zero and span pots in the 500 position.

5.3.1 Check ±15VDC Analyzer Cord power supply.

5.3.2 Check the +8VDC IR Source power supply.

5.3.3 Check the output of the chopper motor driving circuit.

5.3.4 Check the output of the 300 KHz oscillator.

5.3.5 Check chopper motor drive reference signal (at R-58).

5.3.6 Check output of the Chopper Reference Signal Shaper.

5.3.7 Adjust C-7. Refer to Section 5.5.1 of the manual but do not span and zero instrument until the following adjustments are completed.

5.3.8 Adjust zero balance of the optical system. Refer to Section 5.5.2 of the manual. Do not span and zero the instrument until the following adjustments are completed.

5.3.9 Adjust the phasing adjustment of the optical bench. Refer to Section 5.5.3 of the manual. In addition to monitoring TP6 for a maximum negative voltage as indicated in the manual, connect an oscilloscope to the cathode of CR-7. Proper phasing has been achieved when the observed waveform is like an inverted greek letter omega (ω).

5.3.10 Zero the instrument following the procedure in section 3.3.1 of the manual.

5.3.11 Span the instrument following the procedure in section 3.3.2 of the manual. Use span gas concentration near 40 ppm.

6.0 Calibration

6.1 Perform a Primary Calibration following the procedures in Section 3.3.4 of the manual.

6.2 If the absolute deviation on each concentration is less than 10 percent of the designated values, the analyzer can be cleared from the rack. If the absolute deviation on any concentration is more than 10 percent of the designated values, repeat the multipoint calibration. If the repeated multipoint calibration still cannot meet the specification, remove the instrument from the rack, locate and repair the problem, then repeat the stability test and calibration from the beginning.

STANDARD OPERATING PROCEDURE

Title: Laboratory Calibration and Stability Check for the Bendix 8501-5CA CO Analyzer

Date: 3/1/79
Number: 012
Revision: 0

6.3 Affix a properly filled out calibration sticker to the instrument.

7.0 The divisional Quality Assurance Officer will conduct periodic audits of this procedure. Corrective action will be taken as necessary.

Bendix 8501-5CA Infrared CO Analyzer

Adjustment Checklist

Test Point	Designated Value	Observed	Most Probable Malfunction Cause — See Manual —	Remedial Action
Analyzer Card				
+15 (Note 2)	+15 ± .03 volts		Analyzer Card Power Supply	A
−15 (Note 2)	−15 ± .03 volts		Analyzer Card Power Supply	A
TP10 (Note 2)	+8.0 ± .1 volts		IR Source Power Supply	A
TP9D (Note 3)	24 ± volt peak-to-peak square wave at 62 ± 3 Hz rate		Chopper Drive Circuit	A
T3 Terminal 7 (Note 3)	110 ± 5.5 volts peak-to-peak sine wave at 300 ± 30 kHz rate		300 KHz Oscillator	A
R58 (Note 3)	Approximately 150 millivolts peak-to-peak triangular waveform		Chopper Motor	A
TP7 (Note 3)	0 to −12 volt square wave at a 6.2 Hz rate		Chopper Motor Reference Signal Shaper	A
TP2 (Note 2)	0 ± 10 millivolts		C-7 Adjustment	B
TP6 (Notes 2 and 4)	0 ± 50 millivolts		Zero Balance Adjustment	C
TP6 (Notes 2 and 5)	−6.93 volts		Phasing Adjustment	D
TP9 (Notes 2 and 5)	−8.0 volts		Linearizer Circuit	A
TP5 (Notes 3 and 5)	Approximately 6 volts peak-to-peak triangular wave at a 6.2 Hz rate		Amplifier Circuit	A
Control Card				
TP13 (Notes 2 and 5)	+10 volts			A
TP14 (Notes 2 and 5)	+10 volts			A

Notes:

1. All measurements referenced to common unless otherwise noted.
2. Measured with a high imput impedance voltmeter of 1% accuracy.
3. Measured with an oscilloscope.
4. Measurement performed with zero gas injected into instrument.
5. Measurement performed with span gas of 1000 ppm CO concentration injected into the instrument. With lower ppm span gases, the output will be proportionately lower.

Remedial Action Key:

A. Replace board.
B. Adjust C-7, refer to manual section 5.5.1.
C. Adjust zero balance of optical bench, refer to section 5.5.2.
D. Correct phasing adjustment, refer to section 5.5.3.

ERT

EQB

Network _____ Site _____ Instrument Type _____ S/N _____ Date _____

Calibrator: Type _____ S/N _____ Last Cal Date _____ Temp: Des _____ °C Obs _____ °C

DVM: Mfg and Model _____ S/N _____ Last Cal Date _____

Complete where Applicable: Initial: zero pot _____ span pot _____

Final: zero pot _____ span pot _____

Flow Setting	Flow (ℓ/min)	Input Concentrations V_D (0–10V)	Input Concentrations PPM_D (D)*	Unadjusted Readings (Obs) V_o (0–10V)	Unadjusted Readings (Obs) PPM_o (O)*	Adjusted Readings (Obs) V	Adjusted Readings (Obs) PPM_o (O)*	Adjusted Readings (Obs) V	Adjusted Readings (Obs) PPM_o (O)*	Δ%* (⩽ 10%)
Zero Air			0±.005							

In-Station Calibrator S/N _____

Avg. Δ% =

In-Station Calibrator Verification:

	Reference Calibrator			In-Station Calibrator				
	Flow Setting	Analyzer Response (D)* Volts	Analyzer Response (D)* PPM	Flow Setting	Analyzer Response (O)* Volts	Analyzer Response (O)* PPM	Δ%*	(⩽±10%)
TP1								
TP2								

*Δ% = $\left[\frac{O - D}{D}\right]$ x 100

Signature: _____

Q.C. Review _____

Accepted ☐ Rejected ☐

EQB

CALIBRATION CURVE

Network: _____ Date: _____

Site: _____ Time: _____

Site No.: _____ Analyzer S/N: _____

Operator: _____ Calibrator S/N: _____

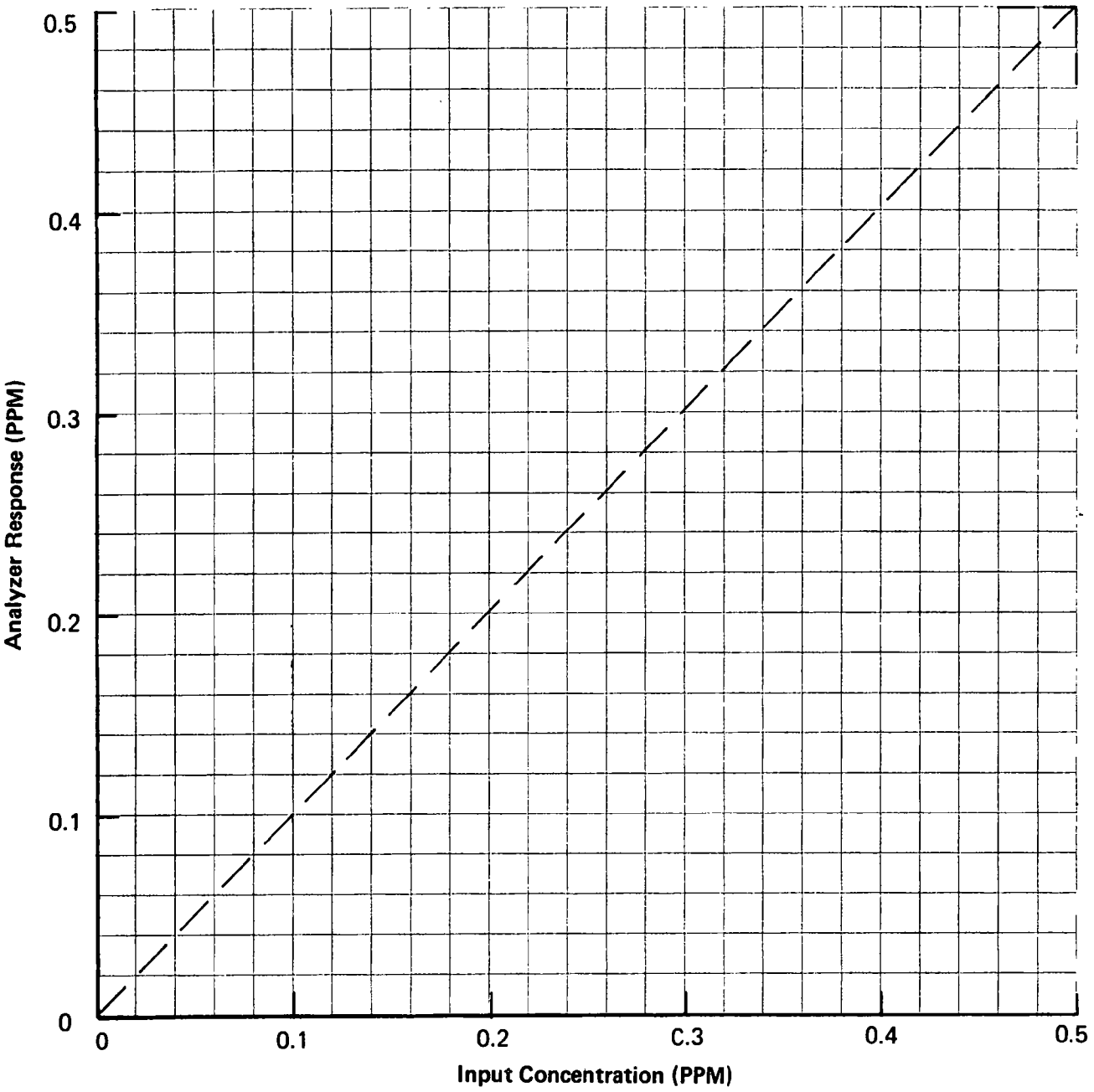

1773 (12/78)

STANDARD OPERATING PROCEDURE

Title:

Date: 3/1/79
Number: 013
Revision: 0

EQB Laboratory Overhaul and Calibration of
the Meloy CS-10 Multipoint SO_2 Permeation Calibrator

Prepared by ERT for the Puerto Rico
Environmental Quality Board Under
Contract No. 68-02-2542

STANDARD OPERATING PROCEDURE

Title: EQB Laboratory Overhaul and Calibration of the Meloy CS-10 Multipoint SO_2 Permeation Calibrator

Date: 3/1/79
Number: 013
Revision: 0

1.0 Applicability

This SOP applies to the laboratory overhaul, checkout, and calibration of the Meloy CS-10 Multipoint Permeation Tube Calibrators used in the EQB network for calibrating SO_2 analyzers.

2.0 Supporting Materials

Digital Multimeter (Fluke 8000 or equivalent).
Thermistor or thermometer calibrated to 43°C ± 0.1°C (NBS traceable).
Leak Checker.
Mass flow meter (Hastings or equivalent) range 0 to 15 ℓ/min (NBS traceable).
Meloy CS-10 manual.
Pressure gauge.

3.0 Preliminary checks, and pneumatic overhaul - refer to and fill out forms 013A.

3.1 Visual Check

3.1.1 Check all lines are properly connected.

3.1.2 Verify capillary is installed and clean (thin metal tubing, see manual).

3.1.3 Verify power switch and lamp operate.

3.1.4 Verify fan operation.

3.1.5 Check for any visual damage.

3.2 Penumatic system overhaul

3.2.1 Replace any discolored or otherwise damaged or suspect lines (TFE teflon).

3.2.2 Replace or overhaul pump on a yearly basis.

3.2.3 Adjust pump pressure deadhead to 10 psi via the pressure regulator.

3.2.4 Replace the charcoal in scrubber and particulate filter cartridges.

3.2.4 Leak test the system - see note on instrument inspection and overhaul report form.

STANDARD OPERATING PROCEDURE

Title: EQB Laboratory Overhaul and Calibration of the Meloy CS-]0 Multipoint SO_2 Permeation Calibrator

Date: 3/1/79
Number: 013
Revision: 0

4.0 Rotameter Calibration

4.1 Insure that the system is leak free.

4.2 Block vent branch of outlet tee and connect the other branch to a mass flow meter having a current calibration seal.

4.3 Read and record flow in liters per minute (ℓ/min) for a minimum of 9 ball heights between 2 and 14.5 centimeters. (This is done for both the steel and glass balls. Read the middle of the ball. Use the attached form. (Form 013B)

4.4 Using arithmetic graph paper, plot ball height (in centimeters) versus measured flow (in ℓ/min for each ball).

4.5 Connect the plotted points with a straight line, if linear, or a smooth curve, if not linear (for each ball).

5.0 Electronics Adjustment

5.1 Turn unit on and allow it to warm up for 30 minutes.

5.2 Verify the oven temperature is at 43°C ± 0.1°C with a calibrated thermistor or thermometer; if not, adjust with variable resistor on board.

5.3 Verify front panel light is flashing when oven is operating at proper temperature.

6.0 Determination of output SO_2 concentration

6.1 Install an NBS traceable certified 1 cm SO_2 permeation tube in the oven.

6.2 From the certification documentation determine the permeation rate (µg/min).

6.3 Using the certified permeation rate, calculate and record the expected output of the calibrator for each ball height measured in step 4.3, using the following equation:

$$\text{Calibrator Output Concentration (ppm)} = \frac{\text{Ave Perm rate } (\mu g/min) \times .382 \left(\frac{ppm\ell}{\mu g}\right)}{\text{Calibrator flow @ each ball height (ml/min)}}$$

Using all the output concentrations derived above, on semilog graph paper, plot output concentrations in ppm on the log scale versus ball height in centimeters on the arithmetic scale.

STANDARD OPERATING PROCEDURE

Title: EQB Laboratory Overhaul and Calibration of the Meloy CS-10 Multipoint SO_2 Permeation Calibrator

Date: 3/1/79
Number: 013
Revision: 0

Using a french curve or a flex curve, draw a continuous curve representative of the plotted points.

6.4 Using the curves derived in Section 6.3 determine the ball heights that would produce the following concentrations:

0.05 ppm
0.10 ppm
0.20 ppm
0.30 ppm
0.45 ppm

and record the information on a calibration card noting the tube serial number, date installed, and whether the ball height used for obtaining above concentrations is the steel or the glass one.

INSTRUMENT INSPECTION AND OVERHAUL REPORT

Manufacturer - Meloy

Instrument - Model CS10 SO_2 Permeation Calibrator Date: _____

Serial No. - _____ Inspector: _____

EQB No. - _____

(Yes or No)
(Unless Noted)

1. Visual Check:

   All lines connected _____

   Capillary installed _____

   Power switch and lamp operate _____

   Flashing lamp indicates proper Temperature (after 15 min. warmup) _____

   Fan operating _____

   Any visual damage _____

   Other _____

2. Replace charcoal scrubber and particulate filter canisters _____

3. Pump Pressure Check (Deadhead) _____ PSI

   Adjusted to 10.0 PSI _____

   Leak check. Increase flow to maximum and block output port. Balls should drop to zero (some bounce will be noted). _____

   Oven thermister resistance (with traceable lab. thermistor) _____ KOHM

   Readjust oven temp. with P6 _____

   Reset meter P3 _____

   30°C oven _____ 35°C oven _____ 43°C oven _____ (check)

ERT

FLOW RATE CALIBRATION BY MASS FLOW METER

Date: _____ Technician: _____

Instrument: Type: _____ Model: _____
Mfg: _____ Range: _____
SN: _____

Standard: Mfg: _____ Model: _____
SN: _____ Range: _____

Calibration Gas: _____

Mass Flowmeter		Instrument	
Voltage, V_{DC}	Flow Rate, /min	Ball Height (cm) Steel	Ball Height (cm) Gloss
		15	
		14	
		13	
		11	
		9	
		8	
		7	
		5	
		4	

STANDARD OPERATING PROCEDURE

Title:

Date: 3/1/79
Number: 014
Revision: 0

EQB Laboratory Overhaul and Calibration of the
Teco 143 Multipoint Permeation Tube
SO_2 Calibrator

Prepared by ERT for the Puerto Rico
Environmental Quality Board Under
Contract No. 68-02-2542

STANDARD OPERATING PROCEDURE

Date: 3/1/79
Number: 014
Revision: 0

Title: EQB Laboratory Overhaul and Calibration of the Teco 143 Multipoint Permeation Tube SO_2 Calibrator

1.0 Applicability

This SOP applies to the laboratory overhaul, checkout, and calibration of the TECO 143 Multipoint Permeation Tube Calibrators used in the EQB network for calibrating SO_2 analyzers.

2.0 Supporting Materials

Digital Multimeter (Fluke 8000 or equivalent).
Thermistor or thermometer calibrated to 35°C ± 0.1°C (NBS traceable).
Leak Checker.
Mass flow meter (Hastings or equivalent) range 0 to 15 ℓ/min (NBS traceable).
Teco 143 manual.
Pressure gauge.

3.0 Preliminary checks, and pneumatic overhaul - refer to and fill out forms 14A.

3.1 Visual Check

- 3.1.1 Check all lines are properly connected.
- 3.1.2 Verify capillary is installed and clean (1 1/4" x0.10) black, long.
- 3.1.3 Verify power switch and lamp operate.
- 3.1.4 Verify solenoid valve operation (audible).
- 3.1.5 Verify fan operation.
- 3.1.6 Check for any visual damage.

3.2 Penumatic system overhaul

- 3.2.1 Replace any discolored or otherwise damaged or suspect lines (FEP teflon).
- 3.2.2 Replace or overhaul pump on a yearly basis.
- 3.2.3 Adjust pump pressure deadhead to 10 psi via the relief pressure regulator mounted on the pump.
- 3.2.4 Replace the charcoal in scrubber and particulate filter.
- 3.2.5 Leak test the system - see note on instrument inspection and overhaul report form.
- 3.2.6 Verify the solenoid valve operation as indicated on item 4 of the enclosed form.

STANDARD OPERATING PROCEDURE

Date: 3/1/79

Title: EQB Laboratory Overhaul and Calibration of the Teco 143 Multipoint Permeation Tube SO_2 Calibrator

Number: 014

Revision: 0

4.0 Rotameter Calibration

4.1 Insure that the system is leak free.

4.2 Block vent branch of outlet tee and connect the other branch to a mass flow meter having a current calibration seal.

4.3 Read and record flow in liters per minute (ℓ/min) for a minimum of 9 ball heights between 2 and 14.5 centimeters. (This is done for both the steel and glass balls. Read the top of the ball. Use the attached form. (Form 014B)

4.4 Using arithmetic graph paper, plot ball height (in centimeters) versus measured flow (in ℓ/min for each ball).

4.5 Connect the plotted points with a straight line, if linear, or a smooth curve, if not linear (for each ball).

5.0 Electronics Adjustment

5.1 Verify power supply to board-top of R1 to ground is 13VDC, if not adjust with P1.

5.2 Turn unit on and allow it to warm up for 30 minutes.

5.3 Verify the oven temperature is at 35°C ± 0.1°C with a calibrated thermistor or thermometer, if not adjust with P-4.

5.4 Adjust meter indication with P2 and P3.

5.5 With a DMM determine the resistance of the metering circuit thermistor when the oven is set at the proper temperature and place a sticker indicating this value on the oven housing.

6.0 Determination of output SO_2 concentration

6.1 Install an NBS certified 5 cm SO_2 permeation tube in the oven.

6.2 From the certification documentation determine the permeation rate (µg/min).

6.3 Using the certified permeation rate, calculate and record the expected output of the calibrator for each ball height measured in step 4.3, using the following equation:

$$\text{Calibrator Output Concentration (ppm)} = \frac{\text{Ave Perm rate } (\mu g/min) \times .382 \left(\frac{ppm\ell}{\mu g}\right)}{\text{Calibrator flow @ each ball height } (m\ell/min)}$$

Using all the output concentrations derived above, on semilog graph paper plot output concentrations in ppm on the log scale versus ball height in centimeters on the arithmetic scale.

STANDARD OPERATING PROCEDURE

Title: EQB Laboratory Overhaul and Calibration of the Teco 143 Multipoint Permeation Tube SO_2 Calibrator

Date: 3/1/79
Number: 014
Revision: 0

Using a french curve or a flex curve, draw a continuous curve representative of the plotted points.

6.4 Using the curves derived in Section 6.3 determine the ball heights that would produce the following concentrations:

0.05 ppm
0.10 ppm
0.20 ppm
0.30 ppm
0.45 ppm

and record the information on a calibration card noting the tube serial number, date installed, and whether the ball height used for obtaining above concentrations is the steel or the glass one.

INSTRUMENT INSPECTION AND OVERHAUL REPORT

Manufacturer - Thermo Electron

Instrument - Model 143 SO_2 Permeation Calibrator Date: _____

Serial No. - _____ Inspector: _____

EQB No. - _____

(Yes or No)
(Unless Noted)

1. Visual Check:

   All lines connected _____

   Capillary installed _____ (1 1/4" x .010) Black, Long

   Power switch and lamp operate _____

   Solenoid valve operates (Audible) _____

   Panel meter lamp indicates proper Temperature (after 15 min. warmup) _____

   Fan operating _____

   Any visual damage _____

   Other _____

2. Replace charcoal scrubber and particulate filter _____

3. Pump Pressure Check (Deadhead) _____ PSI

   Adjusted to 10 PSI

   Gas Leak at permeation oven cap (snoop on cap) _____ w/o pressure

   Gas Leak at permeation oven cap (snoop on cap) _____ w pressure*

4. Output of Z_1 13.0 VDC (Top of R_1 to gnd.) _____

   Adjusted with P_1 _____

   Oven thermister resistance (with traceable lab. thermister _____KOHM

   Readjust oven temp. with P4 _____

   Reset meter P3 _____

   30°C oven _____ 35°C oven _____

5. Solenoid valve operation** (zero-span) _____

*To pressure system: Increase flow to maximum and block output and vent ports. Balls should drop to zero (some bounce will be noted), DO NOT PRESSURE for longer than ONE minute.

**A Rotometer or massflowmeter may be placed on the output of the solenoid bypass charcoal scrubber. The Flow should be approx. 150-180 cc/min. with the flow mode switch in the Zero position and Zero in the Span position.

ERT

FLOW RATE CALIBRATION BY MASS FLOW METER

Date: _____ **Technician:** _____

Instrument: **Type:** _____ **Model:** _____
Mfg: _____ **Range:** _____
SN: _____

Standard: **Mfg:** _____ **Model:** _____
SN: _____ **Range:** _____

Calibration Gas: _____

Mass Flowmeter		Instrument	
Voltage, V_{DC}	Flow Rate, /min	Ball Height (cm) Steel	Ball Height (cm) Gloss
		15	
		14	
		13	
		11	
		9	
		8	
		7	
		5	
		4	

APPENDIX D

DATA REDUCTION SOPs

STANDARD OPERATING PROCEDURE

Title:

Date: 3/1/79
Number: 015
Revision: 0

TECO 43 DATA REDUCTION AND CHECKING

Prepared by

ENVIRONMENTAL RESEARCH & TECHNOLOGY, INC.
for the Puerto Rico Environmental Quality Board
under Contract No. 68-02-2542

STANDARD OPERATING PROCEDURE

Title: TECO 43 DATA REDUCTION AND CHECKING

Date: 3/1/79
Number: 015
Revision: 0

This SOP will be developed jointly by ERT and EQB when the one week data validation training is completed.

STANDARD OPERATING PROCEDURE

Title:

Date: 3/1/79
Number: 016
Revision: 0

BENDIX 8501 DATA REDUCTION AND CHECKING

Prepared by

ENVIRONMENTAL RESEARCH & TECHNOLOGY, INC.
for the Puerto Rico Environmental Quality Board
under Contract No. 68-02-2542

STANDARD OPERATING PROCEDURE

Title: BENDIX 8501 DATA REDUCTION AND CHECKING

Date: 3/1/79
Number: 016
Revision: 0

This SOP will be developed jointly by ERT and EQB when the one week data validation training is completed.

STANDARD OPERATING PROCEDURE

Title:

Date: 3/1/79
Number: 017
Revision: 0

DASIBI DATA REDUCTION AND CHECKING

Prepared by

ENVIRONMENTAL RESEARCH & TECHNOLOGY, INC.
for the Puerto Rico Environmental Quality Board
under Contract No. 68-02-2542

STANDARD OPERATING PROCEDURE

Title: DASIBI DATA REDUCTION AND CHECKING

Date: 3/1/79
Number: 017
Revision: 0

This SOP will be developed jointly by ERT and EQB when the one week data validation training is completed.

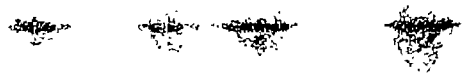

APPENDIX E

AUDITS

STANDARD OPERATING PROCEDURE

Title:

Date: 3/1/79
Number: 018
Revision: 0

FIELD AUDIT

Prepared by

ENVIRONMENTAL RESEARCH & TECHNOLOGY, INC.
for the Puerto Rico Environmental Quality Board
under Contract No. 68-02-2542

STANDARD OPERATING PROCEDURE

Title: Field Audit

Date: 3/1/79
Number: 018
Revision: 0

1.0 Purpose

1.1 Verify that applicable procedures are available, adequate, and are being correctly utilized.

1.2 Verify that 40 CFR58 requirements are met.

1.3 Provide spot verification of instrumentation operation and calibration status.

1.4 Provide documentation of independently verified network status.

1.5 Assess the effectiveness of data validation by the field technician.

1.6 Evaluate the equipment/shelter/grounds condition and maintenance status.

2.0 Responsibilities

2.1 The quality assurance officer will schedule audits quarterly as dictated by 40 CFR 58.

2.2 An auditor is required to make necessary arrangements through the field operations department so that the proper individuals are informed.

2.3 The field operations department should make office and the field technician (s) aware of an impending audit so that time scheduling of audited individuals can be arranged.

3.0 Preliminary

3.1 The auditor should be familiar with the data flow between the field and the data handling department and should be familiar with the intended end use.

3.2 The Auditor should be familiar with the operation of the sensor to be audited and capable of manipulating test instruments in order to assess sensor status and condition. Certification of the auditor on the operation of the instruments and calibrators is highly recommended.

3.3 The Auditor must research the network to determine specific requirements and applicable SOP's. He should review prior audits of the network to determine if prior action items were attended to.

3.4 The auditor should inspect one month of data from the chosen audit site in order to assess data quality, accuracy of data assessment, degree of documentation, apparent time to rectify problems and completeness of log sheets. He should discuss network data quality and documentation with the cognizant Data Handling group leader or analyst.

3.5 The auditor must be familiarized with the pertinent SOP's in order to ascertain compliance with procedures by the field technician, as well as compliance with the Quality Assurance Plan.

4.0 Methods

4.1 Checklist (EQB Form no. 018-A) may be used as a guide to indicate pertinent areas which should be observed.

4.1.1 Shelter Exterior - Before entering the shelter to be audited, walk around the site to ascertain the condition of the grounds, fencing, and shelter.

4.1.2 Manifold - Observe that the intake manifold is secure and that the inlet funnel is in place.

4.2 Inspect the shelter interior for signs of obvious problems such as cracked or peeling floor tile and other general housekeeping. See that any bottled pressurized gases are secured with wall mounted clamps.

4.2.1 The air conditioning unit and thermostat should be set so that the shelter temperature is at 67° - 78°F.

4.2.2 The sampling manifold should be clean and there should be no signs of flow restrictions in the lines on either side of the manifold. Ascertain that air is blowing from the manifold fan. Observe that lines between the manifold and the various connections are stainless steel or teflon. Any unused manifold connections should be capped. Inspect the normal sampling line for leaks, kinks, and visible contamination and moisture. Assure that all ports of the sampling manifold are used or capped off. Estimate volume of the sampling manifold and blower capacity, and if possible calculate an approximate flow through the manifold. Include in the report a description of the manifold and whether it meets EPA QA guidelines (EPA Quality Assurance Handbook for Air Pollution Measurement Systems, Vol. II, 2.0).

4.3 List all the instrumentation equipment in the shelter by manufacturer model and type of instrument (e.g. Meloy - SA185-2 - SO_2) and serial number (use the manufacturer's serial number rather than EQB number if available). Determine if all air quality monitors are certified as reference or equivalent instruments.

4.3.1 Check to assure that each instrument which requires a calibration sticker has one and that it is within calibration. This includes any test equipment used such as volt meters and calibrators.

4.3.2 Roll back the strip charts to observe baseline and calibration data to see that automatic zero and span data is within limits (if auto data is available). Any anomalies should be recorded in the REMARKS section opposite each instrument.

4.4 Check documentation to see that log sheets are properly filled and that charts are marked. Also see that the pertinent periodic visit SOP (such as 001) sheets are filled out. Observe that real time and strip chart data agree, and that all pertinent SOP's for the site/ network are available and up to date. If not, leave a copy of the SOP with the technician. Perform a multipoint calibration of the air quality monitors at the site using appropriate calibration data form according to 40 CFR58.

5.0 Continuous Analyzer Calibration Audit

5.1 Follow indications in 40 CFR 58. Attach the calibrator to the sample intake port of the analyzer, including all filters and scrubbers in the normal sample train.

5.2 Run at least 5 points indicated on 40 CFR 58 Appendix A and zero (SO_2, CO, O_3).*

5.3 Calculate the percent difference between designated (audit) values and observed values (as reported by the strip chart recorder or digital data logger, not by direct voltage readout from the analyzer).

5.4 Analyzer shall not be recalibrated using the audit calibrator.

6.0 Audit Report

6.1 Audit report shall contain a checklist with notations made at the site(s), the results of the audit calibration checks, an evaluation of the overall effectiveness of the agency's data collection activities, and an estimate of the probability of collecting "valid data," based on factual observations.

6.2 The audit report shall contain calculations of accuracy and precision done in accordance with Section 3, Appendix B, proposed 40CFR part 58.

6.3 Audit report shall be submitted to the agency as soon as possible following the audit.

6.4 The original data sheets from the calibration portion of the audit will be archived in the EQB Quality Assurance Library.

*EPA has given EQB authorization to run the Dasibi 1003 without any external means of calibration.

STANDARD OPERATING PROCEDURE

Title: Field Audit

Date: 3/1/79
Number: 018
Revision: 0

7.0 Evaluation

Following the audit, the results should be discussed with the technician. He should be made aware of any corrective action items which are uncovered as well as the positive results of the audit. The district supervisor should be informed to discuss ways in which interaction between the technician and the district can be improved if required. Any difficulties or positive items should be discussed so that problem areas can be resolved and affirmative points used in other areas of the agency.

Network _____ Station _____ Station Number _____

Operator_____ Date_____ Time _____AST Shelter Temp.___°F

Note: (√) for affimative ; (x) for negative; (N/A) for not applicable. Footnote all (x) and explain in remarks.

SHELTER CONDITION

Exterior: Grounds OK? ☐ Shelter OK? ☐ Fence OK? ☐ Security OK? ☐

Sample system OK? ☐ Hivol system OK? ☐

Interior: A/C OK? ☐ and set properly? ☐ Thermostat set at proper temp? ☐

Shelter clean? ☐ Manifold system OK? ☐

INSTRUMENTATION

Manufacturer/Model/Type	Serial #	Cal Sticker OK	B/L OK	Previous Span OK	Remarks

DOCUMENTATION:

Log sheets fill out? ☐ Charts marked? ☐ Routine Visit SOP#( ) filled out? ☐

Special maintenance performed? ☐ Spare supplies? ☐

Realtime/strip chart coincide? ☐ Multi-point cal OK? ☐ Are all pertinent SOP's available? ☐

APPENDIX F

ERT QA POLICY

Corporate statement of quality assurance policy and organization

ERT

ENVIRONMENTAL RESEARCH & TECHNOLOGY, INC.
CONCORD, MASS. • LOS ANGELES • ATLANTA • SAN JUAN P R
FORT COLLINS, CO • WASHINGTON, D.C. • HOUSTON • CHICAGO

CORPORATE STATEMENT OF QUALITY ASSURANCE POLICY AND ORGANIZATION

Accepted	Title	Date
Norman E. Gaut Dr. Norman E. Gaut	President	Sept. 14, 1978
Robert B. Harlan Mr. Robert B. Harlan	Executive Vice President	Sept. 14, 1978
Edward B Reed Dr. Edward B. Reed	Corporate Quality Assurance Officer	Sept. 14, 1978
Robert W. Dunlap Dr. Robert W. Dunlap	Vice President, Environmental Engineering	Sept. 14, 1978
 Mr. David Cook	Vice President, Environmental Systems	Sept. 14, 1978
 Mr. Ross Yeiter	Vice President, Environmental Studies	Sept. 14, 1978
Elliot Newman Mr. Elliot Newman	Vice President, Information Services	Sept. 14, 1978

INTRODUCTION

This document defines ERT Corporate philosophy and policy on Quality Assurance and Quality Control and provides the organization to effect this policy. ERT is dedicated to the concept that all technical work must be accomplished in accordance with accepted quality assurance practices. ERT assures its clients of thorough and cost-effective quality assurance programs designed to fill specific project needs by appending quality assurance documents of appropriate operational groups or units to this Corporate Statement of Quality Assurance Policy and Organization when formulating project Quality Assurance Plans.

POLICY

ERT is committed to the philosophy that quality operations result from quality planning, design, and work performance by skilled operational personnel. ERT's policy is to perform its varied types of technical work in accordance with standard quality assurance practices such as those defined by Code of Federal Regulations, Title 10, Part 50, Appendix B, "Statement of Quality Assurance Criteria for Nuclear Power Plants and Fuel Reprocessing Plants" and the U. S. Environmental Protection Agency's "Quality Assurance Handbook for Air Pollution Measurement Systems," as appropriate. Furthermore, ERT takes full cognizance of state and federal guidelines such as the U. S. Environmental Protection Agency's "Ambient Monitoring Guidelines for Prevention of Significant Deterioration (PSD)" to assure clients of high-quality products that are suitable to the client's needs as defined in contracts and quality assurance plans. In lieu of specific guidelines, best scientific judgment and engineering practices are followed.

QUALITY ASSURANCE ORGANIZATION

Synopsis

The Executive Vice President of ERT is responsible for fulfilling the Corporate commitment to provide quality assurance to its clients. The Executive Vice President is aided by a staff committed to quality assurance functions. This staff consists of a Corporate Quality Assurance Officer and a Quality Assurance Directorate composed of Quality Assurance Officers from each operational group. Group Quality Assurance Officers and the Corporate Quality Assurance Officer report independently of operational line reporting.

The Group Vice Presidents responsible for managing the Environmental Systems Group, the Environmental Studies Group, the Information Services Group, and the Environmental Engineering Group are responsible for the overall preparation and implementation of quality assurance procedures applicable to the specific projects, functional activities for the various operational units, and inter-group coordination. Operational unit managers are responsible for preparation and day-to-day implementation of quality assurance procedures applicable to their clients' specific needs. The Corporate Quality Assurance Officer is responsible for coordinating quality assurance procedures used by operational units and groups, and ensuring that the Quality Assurance Directorate independently audits the performance of operational units to determine that provisions of a program's Quality Assurance Plans are met.

Specific Organization and Responsibilities

The Quality Assurance Organization consists of a Corporate Quality Assurance Officer, a Quality Assurance Directorate, and operational unit Quality Assurance Officers and section Quality Assurance Officers. For quality assurance purposes, units are defined by function, and sections are subdivisions within units. Figure 1 illustrates the relationships of quality assurance levels.

The Corporate Quality Assurance Officer is appointed by the Executive Vice President. The responsibilities of the Corporate Quality Assurance Officer are:

1) to provide overall direction to, and coordination of, quality assurance procedures;
2) to assign to individual members of the Quality Assurance Directorate the various duties provided in the Corporate Statement of Quality Assurance Policy and Organization;
3) to receive reports, independent of line report function, from unit Quality Assurance Officers on Quality Assurance matters; and
4) to convene an annual meeting of the Corporate Quality Assurance Directorate for the purpose of reviewing Corporate Quality Assurance performance during the preceding 12 months and preparing a report for submittal to the Executive Vice President.

The Corporate Quality Assurance Directorate is composed of at least one representative from each of the Corporate Operations Groups. Representatives are appointed by the Executive Vice President. The responsibilities of the Quality Assurance Directorate are:

1) to render advice and comment to both Corporate and Operational Management required to maintain and effect the Corporate Quality Assurance Policy;

Figure 1

DIAGRAMMATIC QUALITY ASSURANCE ORGANIZATION CHART

——— line QA function

– – – independent QA function

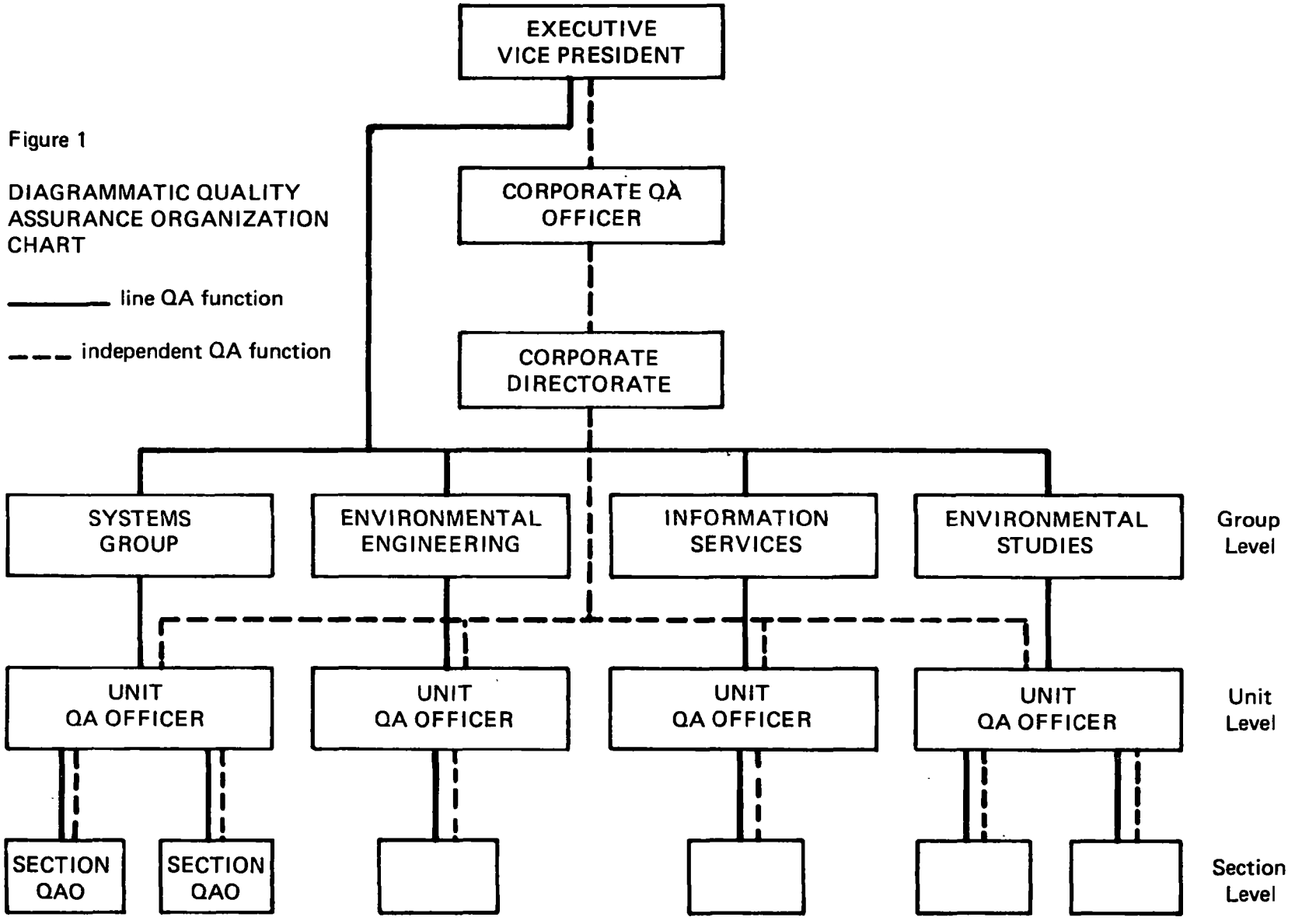

2) to coordinate the efforts of unit Quality Assurance Officers to effect and maintain their individual unit Quality Assurance programs;

3) to conduct regularly scheduled audits of the quality assurance-related functions in each operational group as defined by Quality Assurance Program Plans and implemented by the Standard Operating Procedures for particular work tasks;

4) to advise unit Quality Assurance Officers and operational managers on procedural and operational Quality Assurance requirements found deficient in Quality Assurance audits; and

5) to sign off unit Standard Operating Procedures. Each group representative is authorized as final sign-off personnel on Standard Operating Procedures generated within and specific to his/her group.

One unit Quality Assurance Officer is appointed to each operational unit by the Quality Assurance Directorate. The responsibilities of the unit Quality Assurance Officer are:

1) to generate Quality Assurance Program Plans for each contract or portion of contract for which his/her unit is responsible;

2) to ensure that necessary Standard Operating Procedures are developed and published for all quality-related functions conducted within his/her operational unit;

3) to ensure that Standard Operating Procedures are treated as controlled documents and distributed to appropriate operational personnel;

4) to monitor and take actions required to revise the Standard Operating Procedures, as well as the physical and/or data output of his/her unit, to maintain the unit Quality Assurance Program and the quality level of the unit work; and

5) to monitor adherence to Quality Assurance Documents and safe-keeping of all Records of Quality generated in conformance with unit Standard Operating Procedures.

Section Quality Assurance Officers are appointed by the Quality Assurance Directorate. The number of section Quality Assurance Officers will be appropriate to needs of the unit. The responsibilities of the section Quality Assurance Officer are:

1) to assist the unit Quality Assurance Officer in preparing and updating Standard Operating Procedures;

2) to assist the unit Quality Assurance Officer in monitoring compliance with Standard Operating Procedures; and

3) to assist the unit Quality Assurance Officer in preparing Quality Assurance Plans.

ROLE OF OPERATIONAL PERSONNEL IN QUALITY ASSURANCE

The primary responsibility for maintaining quality of work in all areas of operation, data handling and analysis, documentation, and physical product, remains with group and unit operational personnel, who are responsible for:

1) aiding the generation of, cooperating with, and implementing the Quality Assurance Program Plans of the contracts on which they are working;
2) aiding and cooperating fully with the unit and section Quality Assurance Officers in monitoring the Quality Assurance Program Plans;
3) performing all work to the best standards of their personal professional capability consistent with Standard Operating Procedures;
4) maintaining and calibrating, as required, all measuring and/or monitoring equipment under their control in accordance with established Standard Operating Procedures;
5) collecting, processing, analyzing, reporting, and preserving data consistent with contractual requirements and Standard Operating Procedures; and
6) generating and maintaining all Records of Quality required by Standard Operating Procedures, contract, unit or Corporate Quality Assurance personnel.

DEVELOPMENT OF QUALITY ASSURANCE PLANS

A Quality Assurance Plan may be generated as part of a proposal or as part of a contract. One or more ERT operational units may be involved in developing a plan or performing a program contract.

When the project is completely within or under the control of one ERT operational unit,

1) the unit Quality Assurance Officer, with the assistance of the section Quality Assurance Officer, is responsible for developing the Quality Assurance Plan, and
2) the group member of Quality Assurance Directorate is responsible for reviewing and approving the Plan.

When the project requires the services of two or more ERT operational units,

1) the lead unit Quality Assurance Officer, in cooperation with Quality Assurance Officers of other involved units, is responsible for developing the Quality Assurance Plan, and
2) the Corporate Quality Assurance Officer will designate at least two members of the Quality Assurance Directorate to review and approve the Plan.

Appendix C
to the Final Report

Training Program Plan

ENVIRONMENTAL RESEARCH & TECHNOLOGY, INC.
696 VIRGINIA ROAD, CONCORD, MASSACHUSETTS 01742, (617) 369-8910, 489-3750, TELEX: 923 335 ENVIRORES CNCM CABLE: ERTCON

REF: ERTIG-05

ERT Document No. P-7421

May 25, 1979

Mr. John Hum
EPA, Region II
Air Programs Branch
26 Federal Plaza
New York, NY 10007

Dear John:

RE: USEPA-BOA #69-02-2542

Enclosed please find a copy of the finalized Training Program Plan for the Puerto Rico Environmental Quality Board. This latest version contains the revision associated with the EQB personnel attending our Concord, Massachusetts facilities for the purpose of obtaining data validation training.

Please sign this document and return it to me for inclusion in our files.

If you should have any questions, please do not hesitate to call me.

Very truly yours,

Alberto Costales
Operations Manager
International Group

AC:nlm

cc: Mr. Ralph Kirby, RTP w/out attachment

ENVIRONMENTAL MONITORING PROGRAM

prepared for the

PUERTO RICO ENVIRONMENTAL QUALITY BOARD

by

ENVIRONMENTAL RESEARCH AND TECHNOLOGY

-TRAINING PROGRAM PLAN-

April, 1979

Project - 7421

USEPA-BOA #68-02-2542

I. Introduction

This document describes the design and preparation of a training program for the following instrumentation:

a. Thermo Electron Model 43 Pulsed Fluorescent SO_2 Analyzer

b. Meloy Model CS-10 Permeation Tube SO_2 Calibrator

c. Thermo Electron Model 143 Permeation Tube SO_2 Calibrator

d. Dasibi Model 1003 PC O_3 Monitor

e. Bendix Model 8501-SCA CO Analyzer

f. Esterline Angus MS401 Recorders

This training program has been developed by Environmental Research and Technology (ERT) under Environmental Protection Agency (EPA) contract No. 68-02-2542 and will be presented in Puerto Rico to personnel of the Environmental Quality Board (EQB).

The training will be divided into two phases: classroom training (approximately seven weeks) and on-the-job training (approximately six weeks).

There will be two different classroom training programs: Level 1 and Level 2. Level 1 will consist of training in all aspects of operations, maintenance, calibration, troubleshooting and repairs for the instrumentation listed in above. Level 1 training will consist of approximately three weeks of classroom training. Personnel attending Level 1 training will be divided into two groups and two continuous three week sessions will be held. Level 2 will consist only of the operation and routine maintenance of the instruments listed above and classroom training is expected to last one week.

Personnel having completed the one week Level 2 training will be expected to be able to perform the following tasks:

1. Routine in-shelter preliminary data checks
   - preliminary evaluation of data recorded since last shelter visit including any automated zero and span checks.

2. Routine instrument operational checks

   - mode and status checks

3. Routine maintenance

   - shelter checks

   - external scrubbers

   - calibration gas supply

   - filters

   - air conditioner status

4. Documentation

   - following SOP's

   - documentation of problems in log sheets

   - documentation of instrument installation, removal, and repairs made

Because of the rapid pace at which this initial classroom training program must proceed, only upon successful completion of the Level 2 training will personnel be acceptably prepared to attend the Level 1 classroom training program. Personnel having successfully completed the Level 1 program will have a broad understanding of air quality monitoring principles, operation, calibration, maintenance, and troubleshooting, as well as proper documentation to assure the quality of collected data. This level will enable the person so trained to be able to perform the following tasks:

1. Instrument Operation:

   - knowledge of monitoring purpose and techniques

   - field and laboratory calibrations

2. Instrument Maintenance:

   - routine and preventive

   - fault finding and repair

3. Documentation:

   - calibration and repair records
   - quality control charts
   - material control techniques

Personnel having completed Level 1 or Level 2 training will not be expected to be "experts" in the covered material. The two month on-the-job training period following formal classroom training has been designed to enhance the learning process, enabling the instructor to continually review the covered material by arranging for weekly half-day or full-day classroom review sessions as needed.

II. Expected Level of Preparation

Given the complexity and volume of the material to be covered during the classroom training in preparing this course, several assumptions have been made as to the level of preparation and experience of the personnel attending the training. For the purpose of determining whether the personnel attending the training sessions meet these requirements, a pre-test will be given at the beginning of each session. The material to be covered on each test will be as follows. This listing is also a good indication of the level of preparation prior to training commencement required for successful course completion.

Level 2

a. Basic arithmetic skills
   - interpreting line graphs

b. Familiarity with the use of a digital multimeter (DMM)

Level 1

a. Basic algebraic skills
   - solving linear one variable equations (1st and 2nd degree)
   - calculating averages
   - calculating percentages
   - plotting graphs
   - scientific notation

b. Basic electricity
   - simple circuit diagrams and symbols
   - knowledge of Ohms law
   - oscilloscope
   - digital frequency counter
   - variable power supplies

III. Administration

ERT will send one qualified English/Spanish speaking instructor for the duration of the classroom training as well as one qualified English/Spanish speaking instructor for two months to provide on-the-job training to EQB technicians and operators.

Independent of the instrument training program, the EQB will send to the ERT headquarters in Concord, Massachusetts a meteorologist and a data analyst for a period of one week for the purpose of obtaining training in all aspects of data reduction and validation procedures (as defined by ERT since currently there is no official EPA definition of valid data).

Because of the large amount of highly technical material associated with air quality monitoring instrumentation to be covered during the classroom training, daily and punctual attendance to the training sessions is highly encouraged. A daily record of classroom attendance will be kept. The instructor would be hesitant to recommend a completion certificate to be issued to an individual who has attended less than 80% of the training sessions. The daily classroom sessions will be held from 8:00 to 11:30 and from 12:30 to 4:00.

Examinations or quizzes will be given regularly as shown in Figure 1. They will serve as an evaluation of student performance and will point to those areas in which difficulties were encountered, and the on-the-job training will be directed to helping the EQB personnel to master them. The test results will be averaged for both Level 1 and Level 2, the passing grade for receiving a certificate of training for each session being 75%. The pre-test results will not be counted for this purpose; they will only serve as a guide for the instructor.

During the two month on-the-job training program, the ERT instructor will provide the necessary surveillance and will delegate responsibility, where appropriate, on the operation, maintenance, calibration, and troubleshooting to the EQB personnel.

In addition to the instrument and data validation training programs, EQB personnel (other than those responsible for the operations) will be trained in conducting monthly audits in accordance with 40 CFR 58, during the on-the-job training phase.

A meeting will be held in Puerto Rico with EQB and EPA at the conclusion of the on-the-job training portion of the training program for the purpose of reviewing program status.

IV. Training Schedule

The training schedule is summarized in Figure 1.

FIGURE 1

TRAINING SCHEDULE

LEVEL 2	Day 1 Pre-test Introduction to ambient air monitoring Concepts of calibration	Day 2 Calibrators Meloy CS-10 TECO 143 Recorders- EA 401 quiz	Day 3 TECO 43 quiz	Day 4 Bendix 8501 quiz	Day 5 Dasibi 1003 final exam exam review
LEVEL 1	Day 1 Pre-test Ambient Air Monitoring Units of Measurement	Day 2 Calibrators Meloy CS-10 TECO 143 (theory)	Day 3 Meloy CS-10 TECO 143 (lab session) exam exam review	Day 4 Bendix 8501 theory	Day 5 Bendix 8501 Operation overhaul (lab session)
	Day 6 Bendix 8501 exam troubleshooting exam review (lab session)	Day 7 Documentation Interpreting strip charts	Day 8 TECO 43 theory	Day 9 TECO 43 Operation Overhaul (lab session)	Day 10 TECO 43 exam troubleshooting exam review (lab session)
	Day 11 Dasibi 1003 theory	Day 12 Dasibi 1003 Operation Overhaul (lab session)	Day 13 Dasibi 1003 exam troubleshooting exam review	Day 14 Multipoint calibration Bendix 8501 TECO 43	Day 15 Review Audit Procedures Final exam exam review

V. Documentation

Personnel attending each level of training will receive a binder containing the following:

- course outline
- daily schedules
- copies of all view graphs utilized in training
- outlines summarizing material covered
- reference section containing:
    a) conversion tables
    b) relevant formulas
    c) recommended readings

These binders will help students in that they will virtually not have to copy material covered and will be able to concentrate better in the presentation.

Support documents handed to students will include the necessary instrument manuals, standard operating procedures (SOPs) in conformance with the most recently applicable EPA guidelines, and testing booklets required to participate in the training program.

VI. Acceptance

This Training Program Plan has been developed by Hector R. Diaz and Robert Ledwith of ERT.

Revised by:

Paul A. Filosa — 4-10-79

Paul Filosa
Field Services & Training Manager
ERT

Date

Anthony Sacco — 4-10-79

Anthony Sacco
Senior Project Engineer
ERT

Date

Alberto Costales — 4-11-79

Alberto Costales
Program Manager
ERT

Date

Accepted by:

John Hum — 6/12/79

John Hum
EPA

Date

Appendix D
to the Final Report

Level I Training Manual

TRAINING SCHEDULE

TRAINING SCHEDULE
LEVEL I

DAY 1	DAY 2	DAY 3	DAY 4	DAY 5
Pre Test Ambient Air Monitoring Units of Measurement	Calibrators Meloy CS-10 Teco 143 (Theory)	Meloy CS-10 Teco 143 (Lab. Session) Exam Exam Review	Bendix 8501 Theory	Bendix 8501 Operation Overhaul (Lab. Session)
DAY 6	**DAY 7**	**DAY 8**	**DAY 9**	**DAY 10**
Bendix 8501 Exam Troubleshooting Exam Review (Lab. Session)	Documentation Interpreting Strip Charts	Teco 43 Theory	Teco 43 Operation Overhaul (Lab. Session)	Teco 43 Exam Troubleshooting Exam Review (Lab Session)
DAY 11	**DAY 12**	**DAY 13**	**DAY 14**	**DAY 15**
Dasibi 1003 Theory	Dasibi 1003 Operation Overhaul (Lab Session)	Dasibi 1003 Exam Troubleshooting Exam Review	Multipoint Calibrations Bendix 8501 Teco 43 Dasibi 1003	Review Audit Procedures Final Exam Exam Review

Daily Schedule

8:00 AM — 10:00 AM — Class
10:00 AM — 10:15 AM — Break
10:15 AM — 12:00 M — Class
12:00 M — 1:00 PM — Lunch
1:00 PM — 3:00 PM — Class
3:00 PM — 3:15 PM — Break
3:15 PM — 4:00 PM — Class

PRETEST

ENVIRONMENTAL MONITORING TRAINING PROGRAM

prepared for the

PUERTO RICO ENVIRONMENTAL QUALITY BOARD

by

ENVIRONMENTAL RESEARCH & TECHNOLOGY, INC.

Project No. 7421
April 1979

LEVEL I PRE-EXAMINATION

NOTE:

* This is a thirty question test.
* You have one hour to complete this test.
* Read each question carefully. In the case of multiple-choice questions, you should choose the MOST correct answer.
* Show all work for questions 1-5 in the space provided.

NAME: _____

1. Solve for x:

$8x + 4 = 20$ x= _____

2. Solve for x:

$3x^2 + x + 20 = 100$ x= _____

3. Solve for x:

$\frac{cx}{ax + b} = d$ x= _____

4. Using the equation given in Question 3 solve for x if:

a = 1
b = 3
c = 2
d = 1

x= _____

5. Calculate the average of the following set of numbers:

5.47
3.21
14.02
1.9
2.391

Average= _____

Questions 6-8, given that:

The allowable limit of variation in an analyzer's span check is 200 ± 10%.

6. What are the allowable upper and lower limits?

   A. ( ) 150, 250
   B. ( ) 170, 230
   C. ( ) 180, 220
   D. ( ) 220, 200
   E. ( ) 200, 220
   F. ( ) None of the above.

7. By what percent is an observed value of 150 off the designated (200) value. (Show all work.)

   A. ( ) 0%
   B. ( ) +10%
   C. ( ) -10%
   D. ( ) +25%
   E. ( ) -25%
   F. ( ) None of the above.

8. By what percent is an observed value of 250 off the designated (200) value. (Show all work.)

   A. ( ) 0%
   B. ( ) +10%
   C. ( ) -10%
   D. ( ) +25%
   E. ( ) -25%
   F. ( ) None of the above.

9. Using the semi-log graph paper provided, plot the following data:

X	Y
3	20.1
4	54.6
5	148.4
6	403.4

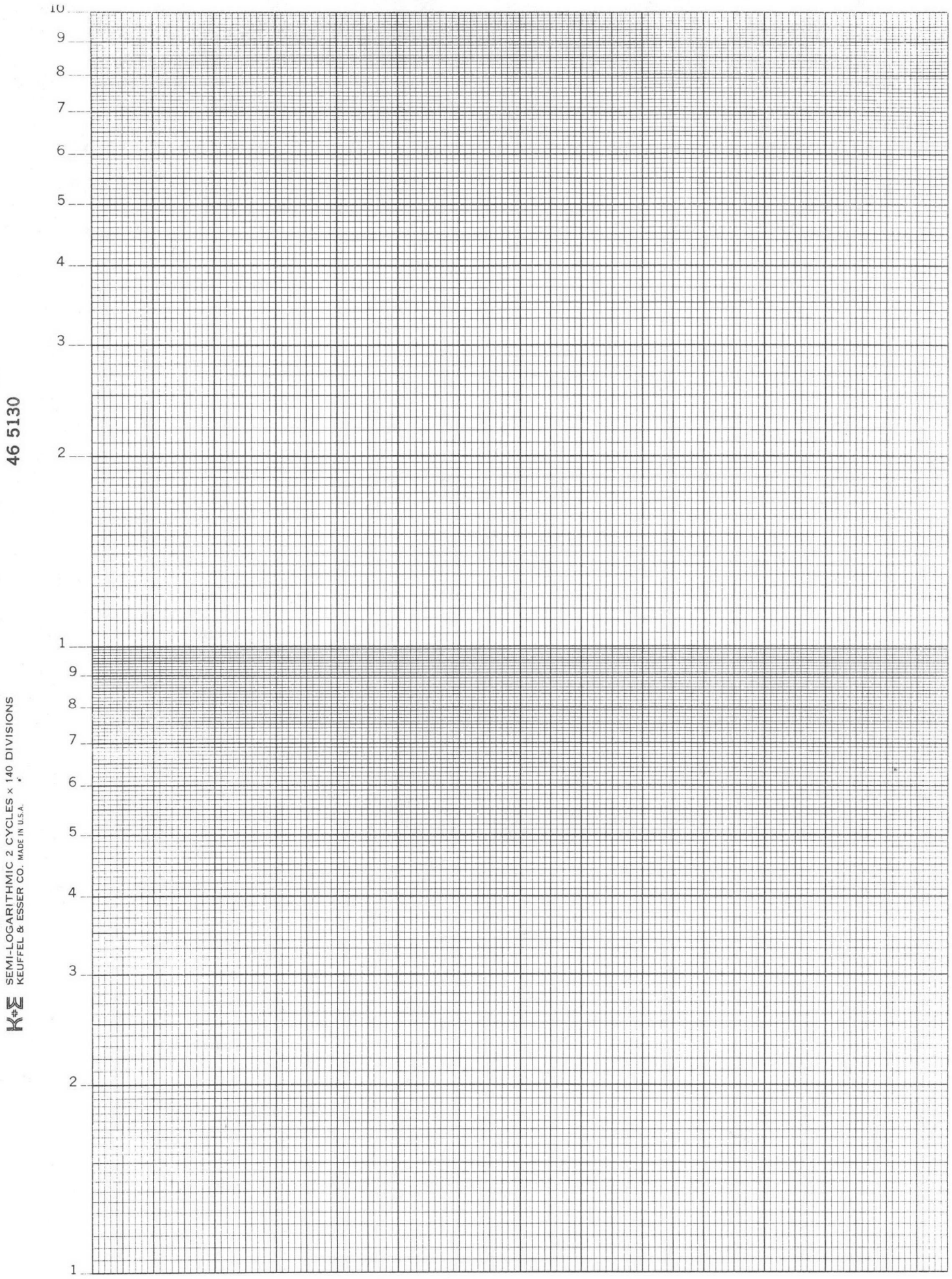
10
9
8
7
6
5
4
3
2
1
9
8
7
6
5
4
3
2
1
46 5130
K+E SEMI-LOGARITHMIC 2 CYCLES × 140 DIVISIONS
KEUFFEL & ESSER CO. MADE IN U.S.A.

Questions 10-23:

Match the following electronic symbols with their proper names:

10. _____
11. _____
12. _____
13. _____
14. _____
15. _____ 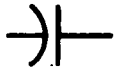
16. _____
17. _____
18. _____
19. _____
20. _____ 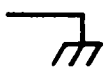
21. _____
22. _____
23. _____

A. Switch
B. Earth Ground
C. Diode
D. Bridge Rectifier
E. Rotary Contact Switch
F. Resistor
G. Inductor
H. Potentiometer
I. P.C. Board Ground
J. Capacitor
K. Thermocouple
L. Transistor
M. Amplifier
N. Chassis Ground

24. Which of the following is OHM's law?

A. ( ) For every OHM there is an equal and opposite OHM.
B. ( ) OHMS cannot be created or destroyed by ordinary means.
C. ( ) E = I/R; where E = volts, I = current in amps, R = resistance in OHMS.
D. ( ) OHMS are directly proportional to time and inversely proportional to distance.
E. ( ) All of the above.
F. ( ) None of the above.

Questions 25 and 26, given this oscilloscope display.

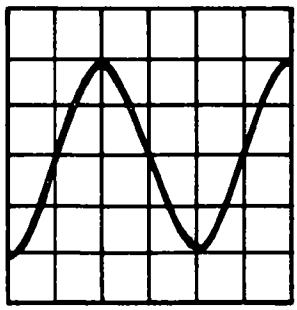

and given that the oscilloscope function switches are set as follows:

Horizontal display - 5 volts/division
Vertical display - 50 msec/division

25. What is the peak to peak voltage?

A. ( ) 0 VDC
B. ( ) 20 Volts
C. ( ) 10 Volts
D. ( ) 5 Volts
E. ( ) None of the above.

26. What is the frequency? (1 Hz = 1 cycle/second)

A. ( ) 50 Hz
B. ( ) 25 Hz
C. ( ) 10 Hz
D. ( ) 100 Hz
E. ( ) 4 Hz
F. ( ) None of the above.

27. 1.47×10^{-3} is the same as:

A. ( ) 0.00147
B. ( ) 147.000
C. ( ) 000.147
D. ( ) 0.147

28. 1,470 is the same as:

A. ( ) 147.0×10^{-1}
B. ( ) 14.70×10^{3}
C. ( ) 1.470×10^{-3}
D. ( ) 1.470×10^{3}

29. $(1 \times 10^{-3})\ (2 \times 10^{-4})$ is the same as:

A. ( ) 2×10^{-12}

B. ( ) 2×10^{-1}

C. ( ) 2×10^{-7}

D. ( ) 2×10^{12}

30. In making measurements to determine pollutant concentrations precision is gained by using more instruments of the same type to make the measurements.

A. ( ) True
B. ( ) False

INTRODUCTION

AMBIENT AIR MONITORING

INTRODUCTION TO AMBIENT AIR MONITORING

LEVEL I

PREPARED CLASS NOTES

INTRODUCTION

1.0 Introduction to Level I Training (Level II training is a pre-requisite)

An Environmental Monitoring Training Program has been developed for the Puerto Rico Environmental Quality Board by Environmental Research & Technology, Inc. (ERT) under a contract for the Environmental Protection Agency. The training program covers the following instrumentation:

- Thermo Electron Model 43 Pulsed Fluorescent SO_2 Analyzer
- Meloy Model CS-10 Permeation Tube SO_2 Calibrator
- Thermo Electron Model 143 Permeation Tube SO_2 Calibrator
- Dasibi Model 1003 PC O_3 Monitor
- Bendix Model 8501-5CA CO Analyzer
- Esterline Angus MS401 Recorders

There will be two different classroom training programs: Level 1 and Level 2. Level 1 will consist of training in all aspects of operations, maintenance, calibration, troubleshooting, and repairs for the instrumentation listed in above. Level 1 training will consist of approximately three weeks of classroom training. Personnel attending Level 1 training will be divided into two groups and two continuous three week sessions will be held. Level 2 will consist only of the operation and routine maintenance of the instruments listed above and classroom training is expected to last one week.

This binder has been prepared for the Level I classroom training and includes a course outline, outlines summarizing material covered, copies of overhead projection transparencies used during the training, and other reference materials.

The material in this binder is intended to help students in that they will virtually not have to copy material covered and will be able to concentrate better in the presentation.

Support documents handed to students will include the necessary instrument manuals, standard operating procedures (SOPs) in conformance with the most recently applicable EPA guidelines, and testing booklets required to participate in the training program.

Because of the rapid pace at which this initial classroom training program must proceed, only upon successful completion of the Level 2 training will personnel be acceptably prepared to attend the Level 1 classroom training program. Personnel having successfully completed the Level 1 program will have a broad understanding of air quality monitoring principles, operation, calibration, maintenance, and trouble-shooting, as well as proper documentation to assure the quality of collected data. This level will enable the person so trained to be able to perform the following tasks:

1) Instrument Operation
   - knowledge of monitoring purpose and techniques
   - field and laboratory calibrations

2) Instrument Maintenance
   - routine and preventive
   - fault finding and repair

3) Documentation
   - calibration and repair records
   - quality control charts
   - material control techniques

Because of the large amount of highly technical material associated with air quality monitoring instrumentation to be covered during the classroom training, daily and punctual attendance to the training sessions is highly encouraged. A daily record of classroom attendance will be kept. The instructor would be hesitant to recommend a completion certificate to be issued to an individual who has attended less than 80% of the training sessions. The daily classroom sessions will be held from 8:00 to 11:30 and from 12:30 to 4:00.

Examinations or quizzes will be given regularly as shown on the schedule. They will serve as an evaluation of student performance and will point to those areas in which difficulties were encountered and

the on-the-job training will be directed to helping the EQB personnel to master them. The test results will be averaged, the passing grade for receiving a certificate of training for each session being 75%. The pre-test results will not be counted for this purpose; they will only serve as a guide for the instructor.

2.0 Gas Properties - Basic Concepts*

2.1 Expression of Gas-Temperature

A. The Fahrenheit and Celsius Scales

The range of units on the Fahrenheit scale between freezing and boiling is 180; on the Celsius or Centigrade scale, the range is 100. Therefore, each Celsius-degree is equal to 9/5 or 1.8 Fahrenheit-degree. The following relationships convert one scale to the other:

$$°F = 1.8°C + 32 \qquad \text{(I-1)}$$

$$°C = (°F - 32)/1.8 \qquad \text{(I-2)}$$

where

°F = degrees Fahrenheit.

°C = degrees Celsius or degrees Centigrade

B. Absolute Temperature

Experiments with perfect gases have shown that, under constant pressure, for each change in Fahrenheit-degree below 32°F the volume of gas changes 1/491.67. Similarly, for each Celsius-degree, the volume changes 1/273.16. Therefore, if this change in volume per temperature-degree is constant, the volume of gas would, theoretically, become zero at 491.67 Fahrenheit-degrees below 32°F, or at a reading of -459.67°F. On the Celsius or Centigrade scale, this condition occurs at 273.16 Celsius-degrees below 0°C, or at a temperature of -273.16°C.

Absolute temperatures determined by using Fahrenheit units are expressed as degrees Rankine (°R); those determined by using Celsius

---

*This section has been adapted from Atmospheric Sampling, a course manual prepared by the U.S. EPA Office of Manpower Development, Institute for Air Pollution Training.

units are expressed as degrees Kelvin (°K). The following relationships convert one scale to the other:

$$°R = °F + 459.67 \quad \text{(I-3)}$$

$$°K = °C + 273.16 \quad \text{(I-4)}$$

The symbol "T" will be used in this outline to denote absolute temperature and "t" will be used to indicate Fehrenheit or Celsius degrees.

2.2 Expression of Gas Pressure

A. Definition of Pressure

A body may be subjected to three kinds of stress: shear, compression, and tension. Fluids are unable to withstand tensile stress; hence, they are subject to shear and compression only. Unit compressive stress in a fluid is termed pressure and is expressed as force per unit area (e.g., lb_f/in^2 or psi, gm_f/cm^2).

Pressure is equal in all directions at a point within a volume of fluid, and acts perpendicular to a surface.

B. Barometric Pressure

Barometric pressure and atmospheric pressure are synonymous. These pressures are measured with a barometer and are usually expressed as inches, or millimeters, of mercury. Standard barometric pressure is the average atmospheric pressure at sea level, 45° north latitude at 35°F. It is equivalent to a pressure of 14.696 pounds-force per square inch exerted at the base of a column of mercury 29.921 inches high. Weather and altitude are responsible for barometric pressure variations.

C. Gage Pressure

Measurements of pressure by ordinary gages are indications of the difference in pressure above, or below, that of the atmosphere surrounding the gage. Gage pressure, then, is ordinarily the pressure indicated

by the gage itself. If the pressure of the system is greater than the pressure prevailing in the atmosphere, the gage pressure is expressed as a positive value; if smaller, the gage pressure is expressed as a negative. The term, "vacuum," designates a negative gage pressure.

The abbreviation, "g," is used to specify a gage pressure. For example, psig, means pounds-force per square inch gage pressure.

D. Absolute Pressure

Because gage pressure (which may be either positive or negative) is the pressure relative to the prevailing atmospheric pressure, the gage pressure, added algebraically to the prevailing atmospheric pressure (which is always positive), provides a value that has a datum of "absolute zero pressure." A pressure calculated in this manner is called "absolute pressure." The mathematical expression is:

$$P_{abs} = P_{atm} + P_g \qquad (2.2\text{-}1)$$

where

P_{abs} = absolute pressure

P_{atm} = atmospheric pressure

P_g = gage pressure

The abbreviation, "a," is sometimes used to indicate that the pressure is absolute. For example, psia, means pounds per square inch absolute pressure. The symbol "P" by itself without the subscript "abs" will also be used in this outline to indicate absolute pressure.

Equation 2.2-1 allows conversion of one pressure system to the other.

E. The Concept of Pressure-Head

Pressure-head is the height of a column of fluid required to produce a given pressure at its base. The relationship between pressure and pressure-head is:

$$P = \rho_f \left(\frac{g}{g_c}\right) h \qquad \text{(II-2)}$$

where

P = pressure, force/area

ρ_f = density of fluid, mass/volume

g = local acceleration due to gravity, length/time^2

g_c = dimensional constant

h = pressure-head in terms of ρ_f, length

Pressure-head may be expressed in terms of any fluid that is convenient, e.g., Hg or H_2O.

F. Dalton's Law of Partial Pressure

When gases, or vapors (having no chemical interaction) are present as a mixture in a given space, the pressure exerted by a component of the gas-mixture at a given temperature is the same as it would exert if it filled the whole space alone. The pressure exerted by one component of a gas-mixture is called its partial pressure. The total pressure of the gas-mixture is the sum of the partial pressures.

2.3 The Law of Ideal Gases

A. The Laws of Boyle and Charles

1. Boyles' Law

Boyle's Law states that, when the temperature (T) is held constant, the volume (V) of a given mass of a perfect gas of a given composition varies inversely as the absolute pressure, i.e.:

$$V \propto \frac{1}{P} \text{ at constant } T$$

where

$\propto$ = proportional to

2. Charles' Law

Charles' Law states that, when the volume is held constant, the absolute pressure of a given mass of a perfect gas of a given composition varies directly as the absolute temperature, i.e.:

$$P \propto T \quad \text{at constant } V$$

B. The Law for Ideal Gases

Both Boyle's and Charles' Law are satisfied in the following equation:

$$PV = \frac{mRT}{M} \tag{2.3-1}$$

where

P = absolute pressure

V = volume of a gas

m = mass of a gas

M = molecular weight of a gas

T = absolute temperature

R = universal gas-constant

The units of R depend upon the units of measurement used in the equation. Some useful values are:

1. $1544 \dfrac{(lb_f)(ft)}{(lb_m\text{-mole})(^\circ R)}$

2. $21.83 \dfrac{(\text{in. Hg})(ft^3)}{(lb_m\text{-mole})(^\circ R)}$

3. $554.6 \dfrac{(\text{mm Hg})\ (ft^3)}{(lb_m\text{-mole})(^\circ R)}$

In the above units of R:

$V = ft^3$

$m = lb_m$

$M = lb_m/lb_m\text{-mole}$

$T = °R$

$P = lb_f/ft^2$ for (1)

$=$ in. Hg for (2)

$=$ mm Hg for (3)

Any value of R can be obtained by utilizing the fact, with appropriate conversion factors, that there are 22.414 liters per gm_m-mole or 359 ft^3 per lb_m-mole at 32°F and 29.92 in. Hg.

2.4 Calculation of Apparent Molecular Weight of Gas Mixtures

Utilizing Dalton's law of partial pressure and the ideal gas law, the following equation can be derived for calculating the apparent molecular weight of a gas mixture:

$$M_{mix} = \Sigma B_x M_x \qquad (2.4\text{-}1)$$

where

M_{mix} = apparent molecular weight of a gas-mixture

B_x = proportion by volume of a gas-component

M_x = molecular weight of a gas component

In all other equations (except where specifically noted), the symbol "M" will be used to denote the molecular weight of a pure gas or a gas-mixture.

2.5 Gas Density

Gas density can be determined by rearranging Equation 2.3-1 and letting density $\rho = \frac{m}{V}$

$$\rho = \frac{P\,M}{R\,T} \tag{2.5-1}$$

where

ρ = density

P = absolute pressure

M = molecular weight

T = absolute temperature

R = universal gas constant

Another method of determining density is by utilizing the fact that there are 22.414 liters per gm-mole or 359 ft^3 per lb_m-mole at 32°F and 29.92 in. Hg.

$$\rho\ \frac{lb_m}{ft^3} = \frac{M\ \frac{lb_m}{lb_m\text{-mole}}}{359\ \frac{ft^3}{lb_m\text{-mole}}} \left(\frac{492°R}{T°R}\right)\left(\frac{P\ \text{in. Hg}}{29.92\ \text{in. Hg}}\right) \tag{2.5-2}$$

In this equation, M = lb_m/lb_m-mole, T = R°, P = in. Hg, and ρ = lb_m/ft^3.

2.6 Summary of Useful Equations

A. Temperature

°F = 1.8°C + 32

°R = °F + 460

°K = °C + 273

°R = 1.8°K

where

°F = degrees Fahrenheit

°C = degress Centigrade or Celsius

°R = degrees Rankine

°K = degrees Kelvin

B. Pressure

$$P_{abs} = P_{atm} + P_g$$

$$P = \rho_f \left(\frac{g}{g_c}\right)^h$$

$$\rho_{f(1)} h_{f(1)} = \rho_{f(2)} h_{f(2)}$$

1 std atm = 14.696 lb_f/in^2

= 2116.224 lb_f/ft^2

= 29.921 in. Hg

= 760 mm Hg

where

P = pressure

ρ = density

h = pressure head or height

g = gravitational acceleration

g_c = dimensional constant

Subscripts

abs = absolute

atm = atmosphere

g = gage

f = fluid

C. Ideal Gas Law

$$PV = \frac{m}{M} RT$$

$$R = 1544 \frac{(lb_f)(ft)}{(lb_m\text{-mole})(^\circ R)}$$

$$= 21.83 \frac{(\text{in. Hg})(ft^3)}{(lb_m\text{-mole})(^\circ R)}$$

$$= 554 \frac{(\text{mm Hg})(ft^3)}{(lb_m\text{-mole})(^\circ R)}$$

1 lb_m-mole $\equiv$ 359 ft^3 at 32°F and 29.92 in. Hg

1 gm_m-mole $\equiv$ 22.414 liters at 0°C and 760 mm Hg

where

P = absolute pressure

V = volume

m = mass

M = molecular weight

R = gas constant

T = absolute temperature

D. Apparent Molecular Weight

$$M_{mix} = \Sigma M_x B_x$$

where

M = molecular weight

B = proportion by volume

Subscript

mix = gas mixture

x = component

E. Gas Density

$$\rho = \frac{PM}{RT}$$

$$\rho = \frac{\left[M \frac{lb_m}{lb_m\text{-mole}}\right]}{(359\ ft^3)} \left(\frac{492°F}{T°R}\right)\left(\frac{P\ in.\ Hg}{29.92\ in.\ Hg}\right)$$

where

ρ = density

P = absolute pressure

R = gas constant

T = absolute temperature

F. Viscosity, μ

$$1\ cp \equiv 6.72 \times 10^{-4} \frac{lb_m}{ft\ sec.}$$

G. Reynold's Number

$$N_{Re} = \frac{L\ v\ \rho_f}{\mu_f}$$

where

N_{Re} = Reynold's number

L = linear dimension

= D for circular pipe

= D_p for spherical particle

= $D_t - D_f$ for a rotameter

v = velocity

ρ_f = fluid density

μ_f = fluid viscosity

D = diameter

D_t = tube diameter

D_f = float diameter

D_p = particle diameter

3.0 Units of Measurement*

3.1 Recommended Units[1]

At the present time, personnel engaged in the study of air pollution are confronted with a multitude of confusing and conflicting units of expression. A search through the literature has shown the wide variation in the methods of reporting data presently in use. Many of the units of expression are carryovers from other fields, such as water pollution studies and industrial hygiene surveys. While these methods of expression are not incorrect, their application to air pollution studies is often midleading.

This outline covers the units presently being used, and those that are recommended for the more commonly measured air pollution parameters.

---

*This section has been adapated from Atmospheric Sampling, a course manual prepared by the U.S. EPA Office of Manpower Development, Institute for Air Pollution Training.

The recommended units were selected so that the reported values would be small whole numbers in the metric system. If possible, the reported units should be the same as those that are actually measured. For example, weight should be reported in grams or milligrams, and volume in cubic meters. The measured value should never be multiplied by large numbers in order to extrapolate to extremely large areas or volumes. If this is done, the resulting values are misleading. For example; in order to report particulate fallout on a weight per square mile basis, the area actually sampled, which is about 1 square foot, would have to be extrapolated to a square mile, by multiplying the measured results by a factor on the order of 10^7. Reporting the results on the basis of a square mile is misleading, because we are saying that the one square foot that we sampled is representative of a square mile surrounding this sampling site. This we know in most cases, is not true.

When reporting results, the type of sampling instrument should be described, and when volumes of air are measured, the temperature and pressure at the time of the sampling should be reported.

3.2 Particle Fallout

A. Units Presently in Use

1) Tons per square mile per month
2) Tons per square mile per year
3) Pounds per acre per month
4) Pounds per acre per year
5) Pounds per thousand square feet per month
6) Ounces per square foot per month
7) Grams per square foot per month
8) Grams per square meter per month
9) Kilograms per square kilometer per month
10) Grams per month per 4 inch or 6 inch jar
11) Milligrams per square inch per month

B. Recommended Units

Milligrams per square centimeter per time interval as mg/sq cm/mo, or mg/sq cm/yr.

C. Ranges Reported

0.5 to 135 mg/sq cm/mo.

3.3 Outdoor Airborne Particulate Sampling

A. Units Presently in Use

1) Milligrams per cubic meter

2) Parts per million by weight

3) Grams per cubic foot

4) Grams per cubic meter

5) Micrograms per cubic meter

6) Micrograms per cubic foot

7) Pounds per thousand cubic feet

B. Recommended Unit

Micrograms per cubic meter at +°C & p mm Hg Pressure.

C. Ranges Expected

10 to 5000 micrograms per cubic meter.

3.4 Gaseous Materials

A. Units Presently in Use

1) Milligrams per cubic meter

2) Micrograms per cubic meter

3) Micrograms per liter

4) Parts per million by weight

5) Parts per million by volume

6) Parts per hundred million

7) Parts per billion by weight or volume

8) Ounces per cubic foot

9) Pounds per cubic foot

10) Grams per cubic foot

11) Pounds per thousand cubic foot

B. Recommended Unit

Micrograms per cubic meter at +°C & p mm Hg Pressure

C. Ranges Reported

Depends on the specific gas.

3.5 Standard Conditions for Reporting Gas Volumes

A. Units Presently in Use

1) 760 millimeters Hg pressure and 20°C

2) 760 millimeters Hg pressure and 0°C

3) 760 millimeters Hg pressure and 65°F

4) 760 millimeters Hg pressure and 25°C

5) 700 millimeters Hg pressure and 0°C

6) 700 millimeters Hg pressure and 20°C

7) 30 inches of mercury pressure and 65°F

B. Recommended Units

760 millimeters pressure and 25°C

3.6 Particulate Counting

A. Units Presently in Use

1) Number per cubic meter of gas

2) Number per liter of gas

3) Number per cubic centimeter of gas

4) Number per cubic foot of gas

B. Recommended Unit

Number of particles per cubic meter of gas as million particles per cubic meter.

C. Range Reported

10 million and above particles per cubic meter

D. Particle count in Sedimentation Devices (both horizontal and vertical)

Recommended unit:

Number of particles per square centimeter per time interval.

3.7 Temperature

A. Units Presently in Use

1) Degrees Centigrade

2) Degrees Fahrenheit

B. Recommended Unit

Degrees Centigrade

3.8 Time

It is recommended that time be measured on the 0000 to 2400 basis to eliminate the possibility of confusion that results from two 12 hour (a day) sections.

3.9 Pressure

A. Units Presently in Use

1) Atmospheric Pressure

a) Atmospheres
b) Millimeters of mercury
c) Inches of mercury
d) Millibars

2) Sampling Pressures

a) Millimeters of mercury
b) Inches of mercury
c) Millimeters of water
d) Inches of water

B. Recommended Unit

Millimeters of mercury

3.10 Sampling Rates

A. Units Presently in Use

1) Cubic meters per second

2) Cubic meters per minute

3) Cubic feet per second

4) Cubic feet per minute

5) Liters per second

6) Liters per minute

7) Cubic centimeters per second

8) Cubic centimeters per minute

B. Recommended Units

1) Cubic meters per minute

2) Cubic centimeters per minute

C. Ranges Reported

Cubic centimeters per minute to 3 cubic meters per minute.

The selection of cubic meters, or cubic centimeters will depend on the sampling equipment used, and the units chosen should give small whole numbers.

3.11 Visibility

A. Units Presently in Use

1) Miles and fractions of a mile

2) Kilometers and fractions of kilometers

B. Recommended Unit

Kilometers

3.12 Summary of Recommended Units

Particle Fallout - Milligrams per square centimeter per time interval.

Outdoor Airborne Particulates - Micrograms per cubic meter at +°C & p mm Hg pressure.

Gaseous Material - Micrograms per cubic meter at +°C & p mm Hg pressure.

Gas Volumes - reported at 760 millimeters Hg pressure and 25°C.

Particulate Counting - Number per cubic meter.

Particle Count on Sedimentation Devices - Number of particles per square centimeter per time interval.

Temperature - Centigrade scale.

Time - 0000 to 2400 hours per day.

Pressure - Millimeters of mercury.

Sampling Rates - Cubic meters, or cubic centimeters per minute.

Visibility - Kilometers

It is believed that adoption and use of the recommended units of expression will result in more uniform reporting, and will remove much of the confusion that is now found in reports of air pollution.

PERMEATION TUBE

SO_2 CALIBRATORS

PERMEATION TUBE SO_2 CALIBRATORS
PREPARED CLASS NOTES

Part I Introduction

Part II Thermo Electron Model 143

Part III Meloy Model CS-10

1. INTRODUCTION

1.1 The quality assurance requirements for State and Local Air Monitoring Stations (SLAMS) and Prevention of Significant Deterioration (PSD) air monitoring mandate that continuous SO_2 analyzers be periodically zeroed, span checked, calibrated, and audited.

The use of permeation tubes to generate calibration SO_2 gas mixtures is widely used. The National Bureau of Standards (NBS) has developed and made available SO_2 permeation tubes. These are regarded as Standard Reference Materials (SRM's) and are considered primary standards.

SO_2 permeation tubes consist of FEP Teflon tubing that contain liquified SO_2, hermetically sealed under its own pressure. These tubes are plugged with a section of Teflon rod, charged with liquefied SO_2, and sealed. Collars of inert metal are used to reinforce the end seals.[1]

The sealed gas permeates through the tube's walls and evaporates from the outer surface at a constant rate if the tube is held at a constant temperature. The process is highly temperature sensitive; therefore the temperature must be controlled with $\pm 0.1°C$.[1] Known concentrations of SO_2 may be prepared by passing a known flow of clean dry air over the permeation device.

---

[1] F. P. Scarignelli, A. E. O'Keefe, E. Rosenberg, J. P. Bell, Analytical Chemistry, Vol 42, No. 8, July 1970.

2. PERMEATION TUBE CALIBRATORS

2.1 Objective:

- The objective is to produce a gaseous sample with a known concentration of SO_2. The concentration should be within the range of whatever SO_2 analyzer that is to be calibrated/audited and should also meet minimum flow requirement of the analyzer.
- Since the permeation device gives off SO_2 at a constant rate, the SO_2 can be diluted in a calibrated clean, dry flow of air to produce the required concentrations:

$$C = \frac{R\ K}{Q_o}$$

where

C = SO_2 concentration in ppm (vol)

R = certified permeation rate in ng/min

K = 0.382 ppm SO_2 (from diluting 1ng SO_2 in one liter of air) (K = constant for specific permeant)

Q_o = flow rate of gas, mℓ/min

2.2 Requirements:

- Permeation tube, NBS calibrated with permeation rate specified in ng/min at a given temperature.
- Calibrator should have permeation oven that can be kept at specified temperature ±0.1°C. This requires the following electronics:
  a. Control circuit - heater
  b. Feedback circuit
- Calibrator should have provision for scrubbing utilized air so that it is free of particulates, SO_2, and humidity.

- Calibrator should have calibrated flow metering and control pneumatics.

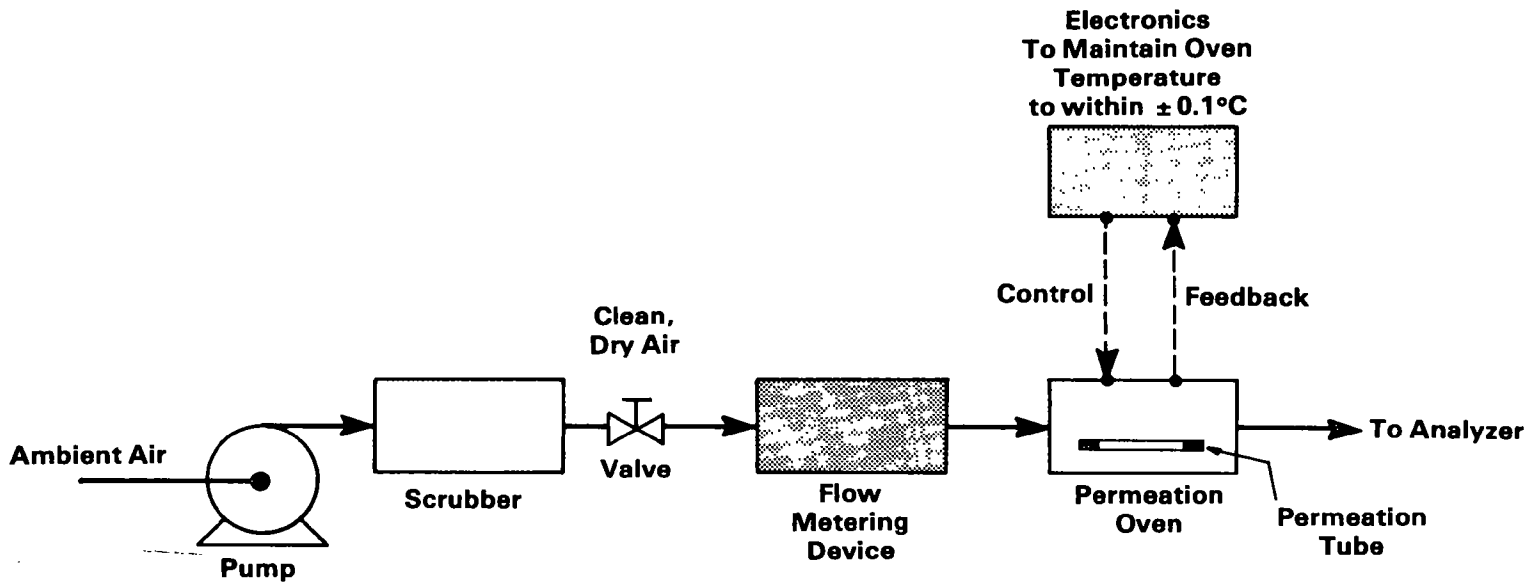

CONCEPTUAL PERMEATION TUBE CALIBRATOR

ERT

ERT

FLOW RATE CALIBRATION BY MASS FLOW METER

Date: _____ **Technician:** _____

Instrument: **Type:** _____ **Model:** _____
Mfg: _____ **Range:** _____
SN: _____

Standard: **Mfg:** _____ **Model:** _____
SN: _____ **Range:** _____

Calibration Gas: _____

Mass Flowmeter		Instrument	
Voltage, V_{DC}	Flow Rate, /min	Ball Height (cm) Steel	Ball Height (cm) Gloss
		15	
		14	
		13	
		11	
		9	
		8	
		7	
		5	
		4	

1814 (4/79)

Instrument Model Mfg _____ SN _____ EQB SN _____

Rotometer Calibration (Range) Date

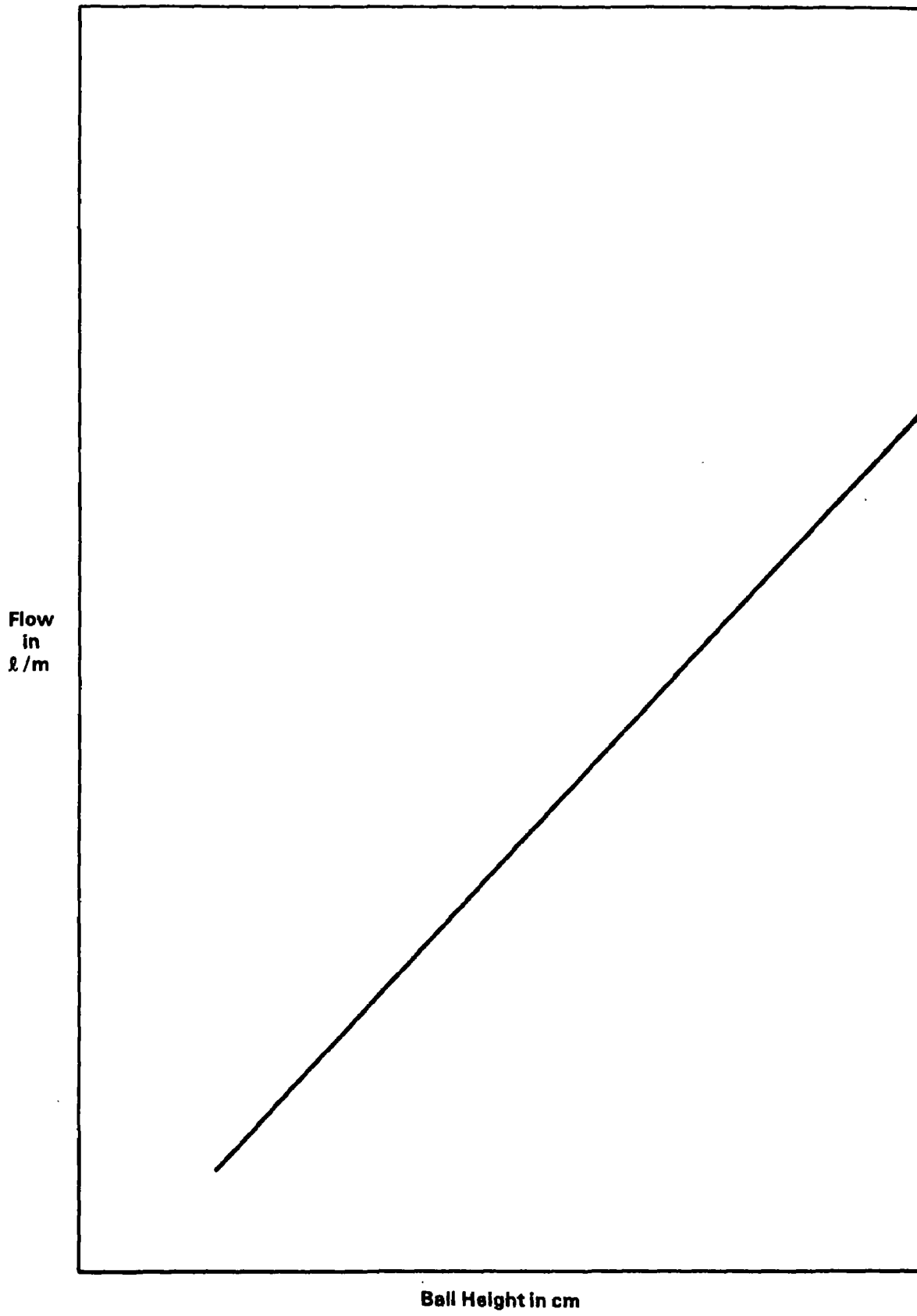

ERT

7904008

DETERMINATION OF SO_2 CONCENTRATION (CALIBRATOR OUTPUT)

$$C = \frac{RK}{Q_o}$$

C = SO_2 CONCENTRATION IN PPM (VOLUME)

R = PERMEATION RATE IN NG/MIN (AT SPECIFIED TEMPERATURE ± 0.1°C)

K = 0.382 ppm SO_2 - mℓ /ng SO_2 (K = CONSTANT FOR SPECIFIC PERMEANT)

Q = FLOW RATE OF GAS IN mℓ /MIN

ERT

Instrument _____ Model _____ SN _____ EQB SN _____

Permeation Tube SN _____ Date

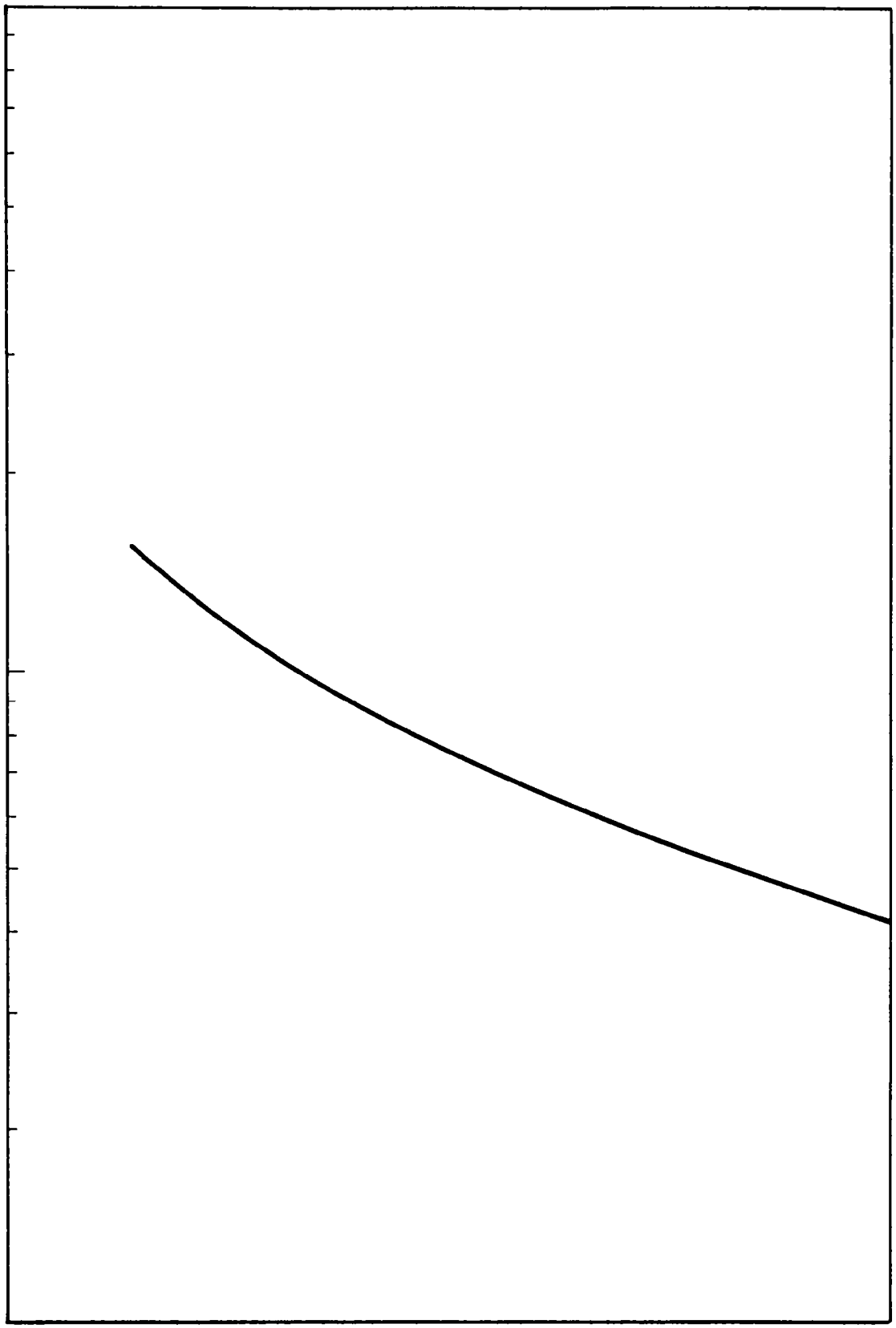

ERT

3. THE THERMO ELECTRON MODEL 143 PERMEATION TUBE CALIBRATOR

(See the following attachments)

STANDARD OPERATING PROCEDURE

Title:

Date: 3/1/79
Number: 014
Revision: 0

EQB Laboratory Overhaul and Calibration of the
Teco 143 Multipoint Permeation Tube
SO_2 Calibrator

Prepared by ERT for the Puerto Rico
Environmental Quality Board Under
Contract No. 68-02-2542

STANDARD OPERATING PROCEDURE

Date: 3/1/79
Number: 014
Revision: 0

Title: EQB Laboratory Overhaul and Calibration of the Teco 143 Multipoint Permeation Tube SO_2 Calibrator

1.0 Applicability

This SOP applies to the laboratory overhaul, checkout, and calibration of the TECO 143 Multipoint Permeation Tube Calibrators used in the EQB network for calibrating SO_2 analyzers.

2.0 Supporting Materials

Digital Multimeter (Fluke 8000 or equivalent).
Thermistor or thermometer calibrated to 35°C ± 0.1°C (NBS traceable).
Leak Checker.
Mass flow meter (Hastings or equivalent) range 0 to 15 ℓ/min (NBS traceable).
Teco 143 manual.
Pressure gauge.

3.0 Preliminary checks, and pneumatic overhaul - refer to and fill out forms 14A.

3.1 Visual Check

3.1.1 Check all lines are properly connected.

3.1.2 Verify capillary is installed and clean (1 1/4" x0.10) black, long.

3.1.3 Verify power switch and lamp operate.

3.1.4 Verify solenoid valve operation (audible).

3.1.5 Verify fan operation.

3.1.6 Check for any visual damage.

3.2 Penumatic system overhaul

3.2.1 Replace any discolored or otherwise damaged or suspect lines (FEP teflon).

3.2.2 Replace or overhaul pump on a yearly basis.

3.2.3 Adjust pump pressure deadhead to 10 psi via the relief pressure regulator mounted on the pump.

3.2.4 Replace the charcoal in scrubber and particulate filter.

3.2.5 Leak test the system - see note on instrument inspection and overhaul report form.

3.2.6 Verify the solenoid valve operation as indicated on item 4 of the enclosed form.

STANDARD OPERATING PROCEDURE

Date: 3/1/79

Title: EQB Laboratory Overhaul and Calibration of the Teco 143 Multipoint Permeation Tube SO_2 Calibrator

Number: 014

Revision: 0

4.0 Rotameter Calibration

4.1 Insure that the system is leak free.

4.2 Block vent branch of outlet tee and connect the other branch to a mass flow meter having a current calibration seal.

4.3 Read and record flow in liters per minute (ℓ/min) for a minimum of 9 ball heights between 2 and 14.5 centimeters. (This is done for both the steel and glass balls. Read the top of the ball. Use the attached form. (Form 014B)

4.4 Using arithmetic graph paper, plot ball height (in centimeters) versus measured flow (in ℓ/min for each ball).

4.5 Connect the plotted points with a straight line, if linear, or a smooth curve, if not linear (for each ball).

5.0 Electronics Adjustment

5.1 Verify power supply to board-top of R1 to ground is 13VDC, if not adjust with P1.

5.2 Turn unit on and allow it to warm up for 30 minutes.

5.3 Verify the oven temperature is at 35°C ± 0.1°C with a calibrated thermistor or thermometer, if not adjust with P-4.

5.4 Adjust meter indication with P2 and P3.

5.5 With a DMM determine the resistance of the metering circuit thermistor when the oven is set at the proper temperature and place a sticker indicating this value on the oven housing.

6.0 Determination of output SO_2 concentration

6.1 Install an NBS certified 5 cm SO_2 permeation tube in the oven.

6.2 From the certification documentation determine the permeation rate (µg/min).

6.3 Using the certified permeation rate, calculate and record the expected output of the calibrator for each ball height measured in step 4.3, using the following equation:

$$\text{Calibrator Output Concentration (ppm)} = \frac{\text{Ave Perm rate (µg/min)} \times .382 \left(\frac{\text{ppm}\ell}{\mu g}\right)}{\text{Calibrator flow @ each ball height (m}\ell\text{/min)}}$$

Using all the output concentrations derived above, on semilog graph paper plot output concentrations in ppm on the log scale versus ball height in centimeters on the arithmetic scale.

STANDARD OPERATING PROCEDURE

Title: EQB Laboratory Overhaul and Calibration of the Teco 143 Multipoint Permeation Tube SO_2 Calibrator

Date: 3/1/79
Number: 014
Revision: 0

Using a french curve or a flex curve, draw a continuous curve representative of the plotted points.

6.4 Using the curves derived in Section 6.3 determine the ball heights that would produce the following concentrations:

0.05 ppm
0.10 ppm
0.20 ppm
0.30 ppm
0.45 ppm

and record the information on a calibration card noting the tube serial number, date installed, and whether the ball height used for obtaining above concentrations is the steel or the glass one.

INSTRUMENT INSPECTION AND OVERHAUL REPORT

Manufacturer - Thermo Electron

Instrument - Model 143 SO_2 Permeation Calibrator Date: _____

Serial No. - _____ Inspector: _____

EQB No. - _____

(Yes or No)
(Unless Noted)

1. Visual Check:
   - All lines connected _____
   - Capillary installed _____ (1 1/4" x .010) Black, Long
   - Power switch and lamp operate _____
   - Solenoid valve operates (Audible) _____
   - Panel meter lamp indicates proper Temperature (after 15 min. warmup) _____
   - Fan operating _____
   - Any visual damage _____
   - Other _____

2. Replace charcoal scrubber and particulate filter _____

3. Pump Pressure Check (Deadhead) _____ PSI
   - Adjusted to 10 PSI
   - Gas Leak at permeation oven cap (snoop on cap) _____ w/o pressure
   - Gas Leak at permeation oven cap (snoop on cap) _____ w pressure*

4. Output of Z_1 13.0 VDC (Top of R_1 to gnd.) _____
   - Adjusted with P_1 _____
   - Oven thermister resistance (with traceable lab. thermister _____KOHM
   - Readjust oven temp. with P4 _____
   - Reset meter P3 _____
   - 30°C oven _____ 35°C oven _____

5. Solenoid valve operation** (zero-span) _____

*To pressure system: Increase flow to maximum and block output and vent ports. Balls should drop to zero (some bounce will be noted), DO NOT PRESSURE for longer than ONE minute.

**A Rotometer or massflowmeter may be placed on the output of the solenoid bypass charcoal scrubber. The Flow should be approx. 150-180 cc/min. with the flow mode switch in the Zero position and Zero in the Span position.

EQB

FLOW RATE CALIBRATION BY MASS FLOW METER

Date: _____ Technician: _____

Instrument: Type: _____ Model: _____
Mfg: _____ Range: _____
SN: _____

Standard: Mfg: _____ Model: _____
SN: _____ Range: _____

Calibration Gas: _____

Mass Flowmeter		Instrument	
Voltage, V_{DC}	Flow Rate, /min	Ball Height (cm) Steel	Ball Height (cm) Gloss
		15	
		14	
		13	
		11	
		9	
		8	
		7	
		5	
		4	

Form 014-B

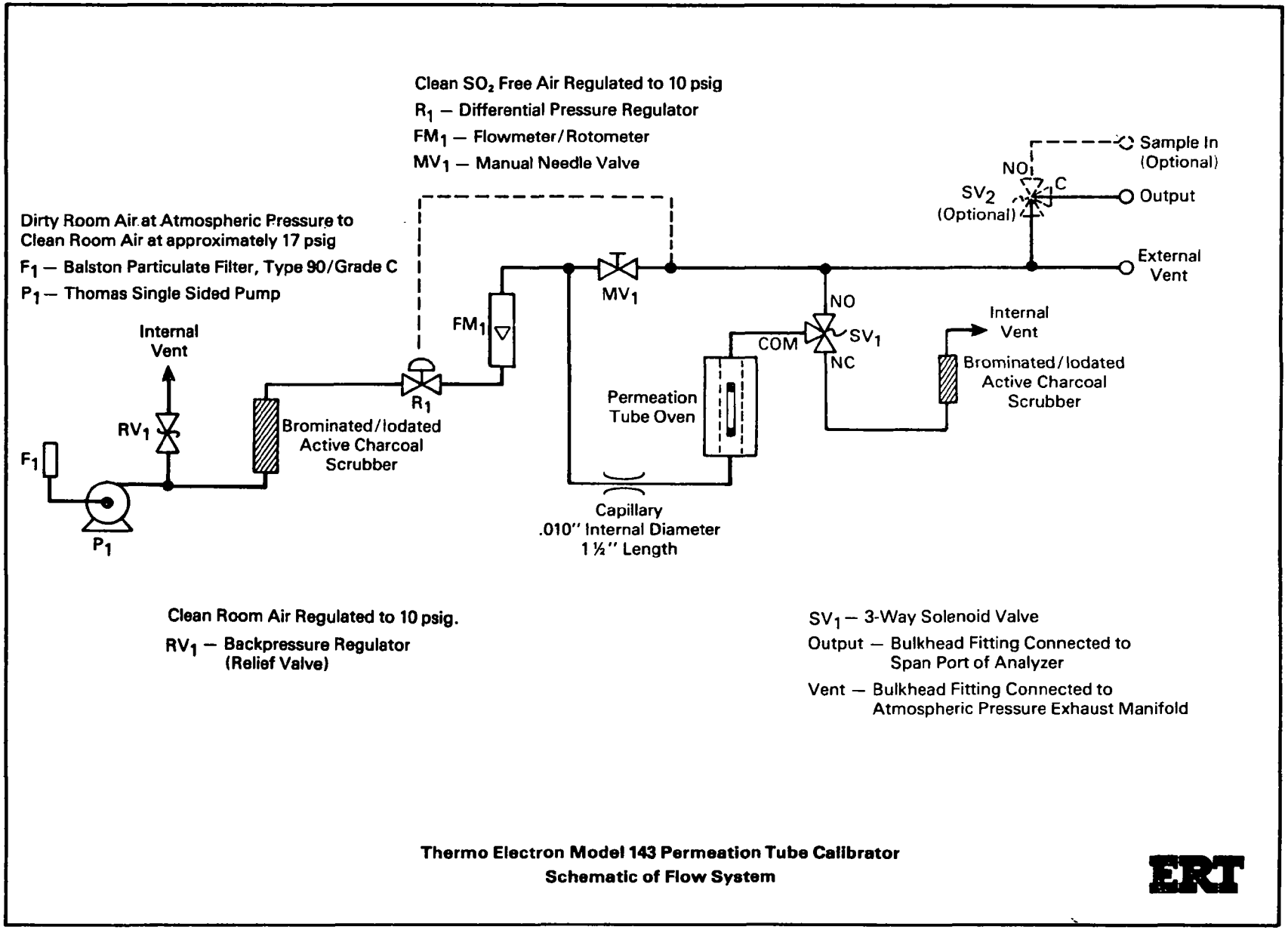

Thermo Electron Model 143 Permeation Tube Calibrator
Schematic of Flow System

ERT

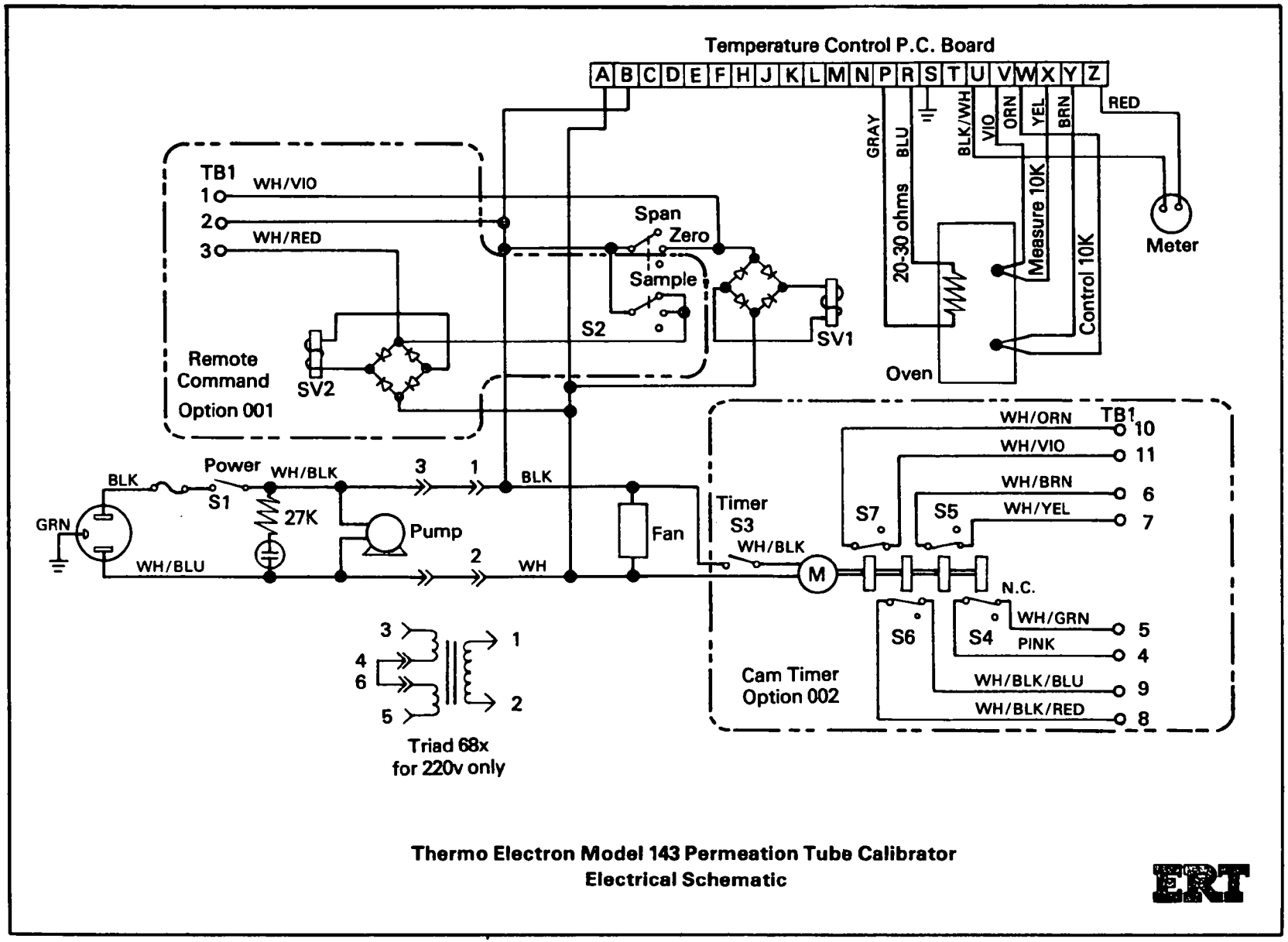

Thermo Electron Model 143 Permeation Tube Calibrator
Electrical Schematic

TE 143
TEMPERATURE CONTROLLER
PC BOARD

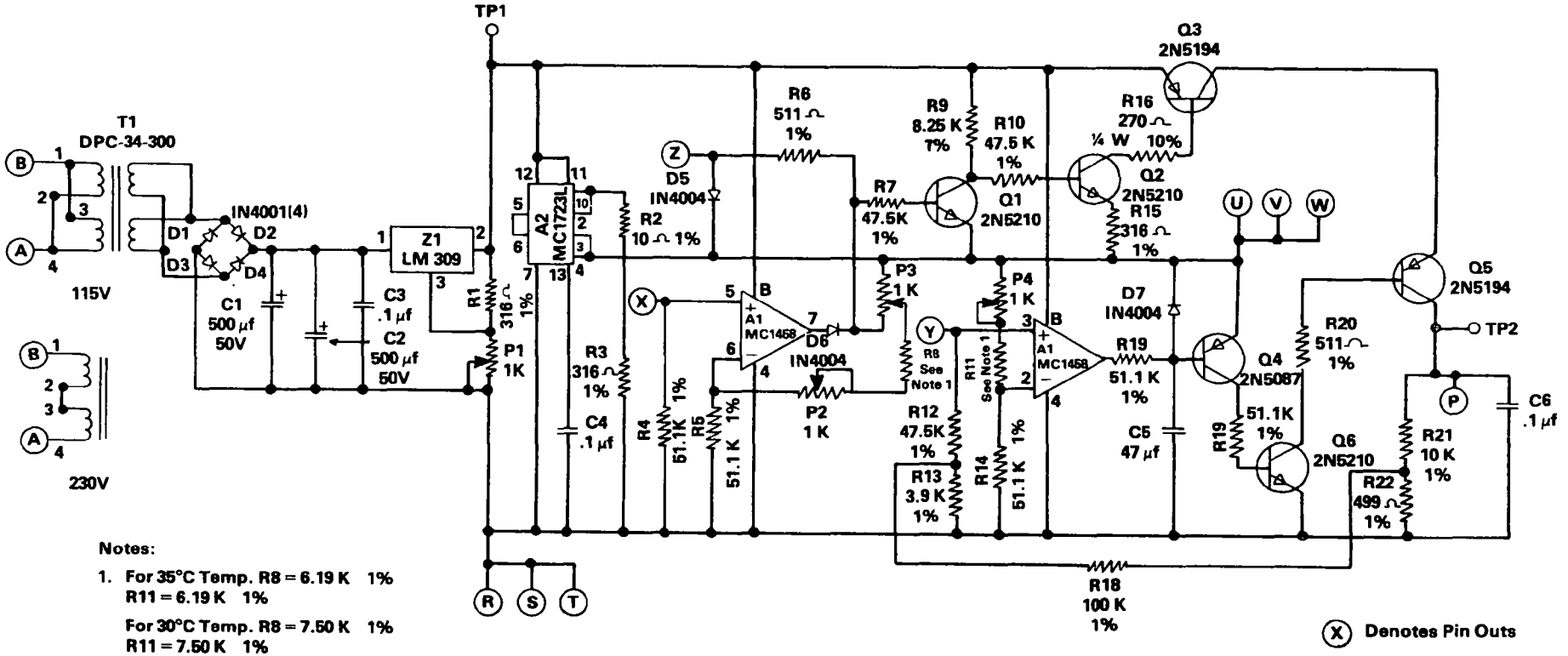

Notes:

1. For 35°C Temp. R8 = 6.19 K 1%
   R11 = 6.19 K 1%

   For 30°C Temp. R8 = 7.50 K 1%
   R11 = 7.50 K 1%

(X) Denotes Pin Outs

ERT

4. THE MELOY CS-10 MULTIPOINT SO_2 CALIBRATOR

(See the following attachments)

STANDARD OPERATING PROCEDURE

Title:

Date: 3/1/79
Number: 013
Revision: 0

EQB Laboratory Overhaul and Calibration of
the Meloy CS-10 Multipoint SO_2 Permeation Calibrator

Prepared by ERT for the Puerto Rico
Environmental Quality Board Under
Contract No. 68-02-2542

STANDARD OPERATING PROCEDURE

Title: EQB Laboratory Overhaul and Calibration of the Meloy CS-10 Multipoint SO_2 Permeation Calibrator

Date: 3/1/79
Number: 013
Revision: 0

1.0 Applicability

This SOP applies to the laboratory overhaul, checkout, and calibration of the Meloy CS-10 Multipoint Permeation Tube Calibrators used in the EQB network for calibrating SO_2 analyzers.

2.0 Supporting Materials

Digital Multimeter (Fluke 8000 or equivalent).
Thermistor or thermometer calibrated to 43°C ± 0.1°C (NBS traceable).
Leak Checker.
Mass flow meter (Hastings or equivalent) range 0 to 15 ℓ/min (NBS traceable).
Meloy CS-10 manual.
Pressure gauge.

3.0 Preliminary checks, and pneumatic overhaul - refer to and fill out forms 013A.

3.1 Visual Check

3.1.1 Check all lines are properly connected.

3.1.2 Verify capillary is installed and clean (thin metal tubing, see manual).

3.1.3 Verify power switch and lamp operate.

3.1.4 Verify fan operation.

3.1.5 Check for any visual damage.

3.2 Penumatic system overhaul

3.2.1 Replace any discolored or otherwise damaged or suspect lines (TFE teflon).

3.2.2 Replace or overhaul pump on a yearly basis.

3.2.3 Adjust pump pressure deadhead to 10 psi via the pressure regulator.

3.2.4 Replace the charcoal in scrubber and particulate filter cartridges.

3.2.4 Leak test the system - see note on instrument inspection and overhaul report form.

STANDARD OPERATING PROCEDURE

Title: EQB Laboratory Overhaul and Calibration of the Meloy CS-]0 Multipoint SO_2 Permeation Calibrator

4.0 Rotameter Calibration

4.1 Insure that the system is leak free.

4.2 Block vent branch of outlet tee and connect the other branch to a mass flow meter having a current calibration seal.

4.3 Read and record flow in liters per minute (ℓ/min) for a minimum of 9 ball heights between 2 and 14.5 centimeters. (This is done for both the steel and glass balls. Read the middle of the ball. Use the attached form. (Form 013B)

4.4 Using arithmetic graph paper, plot ball height (in centimeters) versus measured flow (in ℓ/min for each ball).

4.5 Connect the plotted points with a straight line, if linear, or a smooth curve, if not linear (for each ball).

5.0 Electronics Adjustment

5.1 Turn unit on and allow it to warm up for 30 minutes.

5.2 Verify the oven temperature is at 43°C ± 0.1°C with a calibrated thermistor or thermometer; if not, adjust with variable resistor on board.

5.3 Verify front panel light is flashing when oven is operating at proper temperature.

6.0 Determination of output SO_2 concentration

6.1 Install an NBS traceable certified 1 cm SO_2 permeation tube in the oven.

6.2 From the certification documentation determine the permeation rate (μg/min).

6.3 Using the certified permeation rate, calculate and record the expected output of the calibrator for each ball height measured in step 4.3, using the following equation:

$$\text{Calibrator Output Concentration (ppm)} = \frac{\text{Ave Perm rate } (\mu g/min) \times .382 \left(\frac{ppm\ell}{\mu g}\right)}{\text{Calibrator flow @ each ball height (ml/min)}}$$

Using all the output concentrations derived above, on semilog graph paper, plot output concentrations in ppm on the log scale versus ball height in centimeters on the arithmetic scale.

STANDARD OPERATING PROCEDURE

Title: EQB Laboratory Overhaul and Calibration of the Meloy CS-10 Multipoint SO_2 Permeation Calibrator

Date: 3/1/79
Number: 013
Revision: 0

Using a french curve or a flex curve, draw a continuous curve representative of the plotted points.

6.4 Using the curves derived in Section 6.3 determine the ball heights that would produce the following concentrations:

0.05 ppm
0.10 ppm
0.20 ppm
0.30 ppm
0.45 ppm

and record the information on a calibration card noting the tube serial number, date installed, and whether the ball height used for obtaining above concentrations is the steel or the glass one.

INSTRUMENT INSPECTION AND OVERHAUL REPORT

Manufacturer - Meloy

Instrument - Model CS10 SO_2 Permeation Calibrator Date: _____

Serial No. - _____ Inspector: _____

EQB No. - _____

(Yes or No)
(Unless Noted)

1. Visual Check:

   All lines connected _____

   Capillary installed _____

   Power switch and lamp operate _____

   Flashing lamp indicates proper Temperature (after 15 min. warmup) _____

   Fan operating _____

   Any visual damage _____

   Other _____

2. Replace charcoal scrubber and particulate filter canisters _____

3. Pump Pressure Check (Deadhead) _____ PSI

   Adjusted to 10.0 PSI _____

   Leak check. Increase flow to maximum and block output port. Balls should drop to zero (some bounce will be noted). _____

   Oven thermister resistance (with traceable lab. thermistor) _____ KOHM

   Readjust oven temp. with P6 _____

   Reset meter P3 _____

   30°C oven _____ 35°C oven _____ 43°C oven _____ (check)

EQB

FLOW RATE CALIBRATION BY MASS FLOW METER

Date: _____ **Technician:** _____

Instrument: **Type:** _____ **Model:** _____
Mfg: _____ **Range:** _____
SN: _____

Standard: **Mfg:** _____ **Model:** _____
SN: _____ **Range:** _____

Calibration Gas: _____

Mass Flowmeter		Instrument	
Voltage, V_{DC}	Flow Rate, . /min	Ball Height (cm) Steel	Ball Height (cm) Gloss
		15	
		14	
		13	
		11	
		9	
		8	
		7	
		5	
		4	

Form 013-B

MELOY CS-10 WIRING DIAGRAM

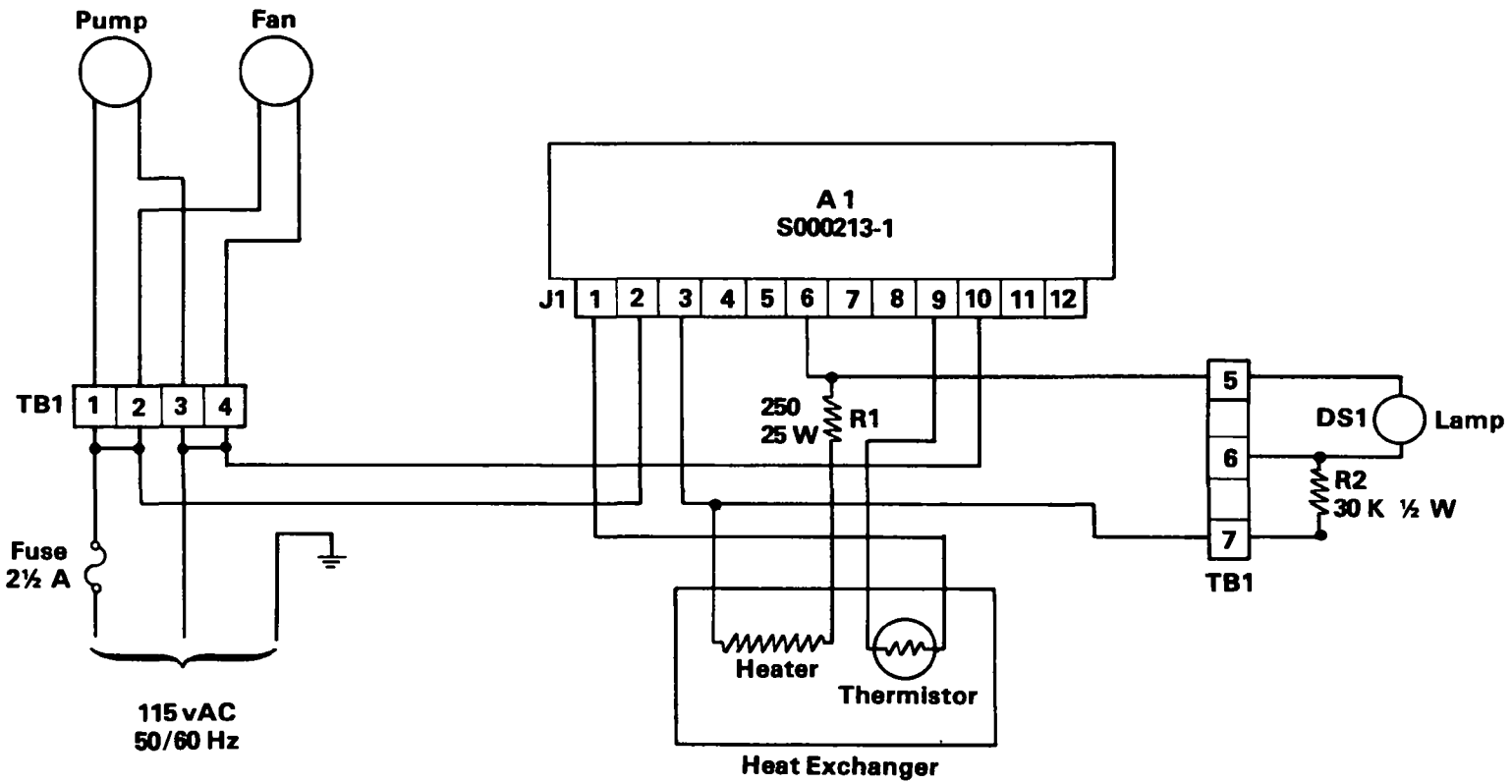

ERT

MELOY CS-10
TEMPERATURE CONTROL PC BOARD
ELECTRICAL SCHEMATIC

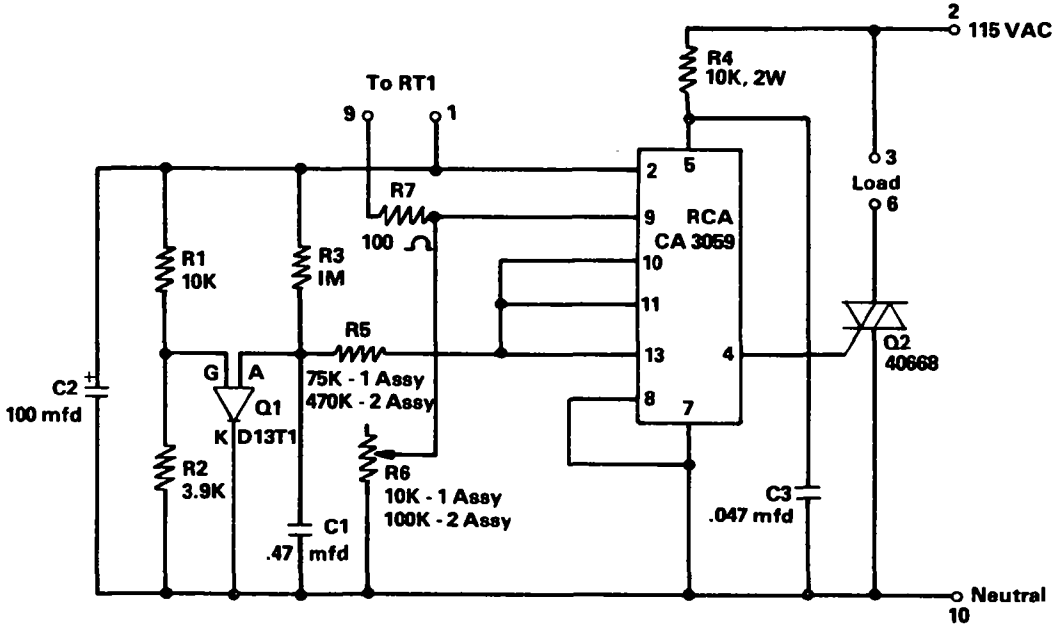

ERT

MELOY CS-10
TEMPERATURE CONTROL PC BOARD
COMPONENT SIDE

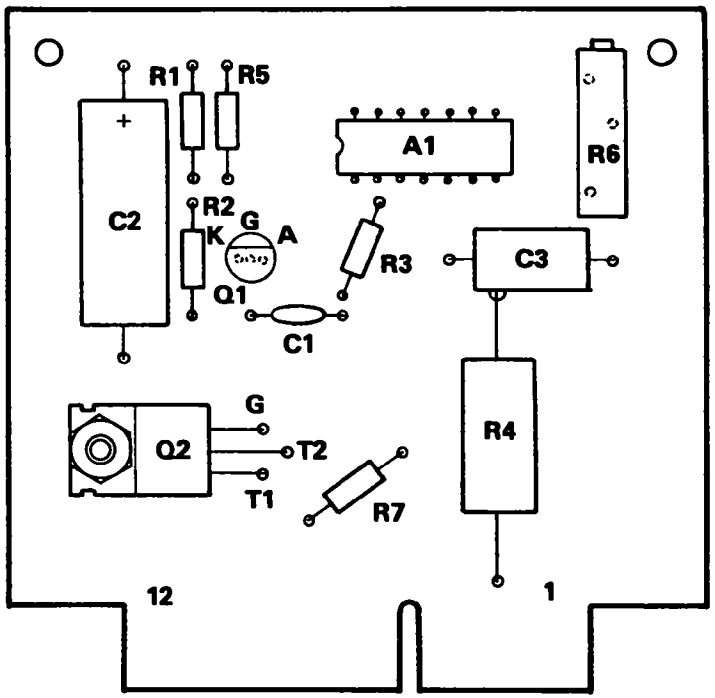

ERT

BENDIX CO ANALYZER

MODEL 8501-5CA

BENDIX MODEL 8501-5CA CO MONITOR

Prepared Class Notes

1. INTRODUCTION

1.1 The method used in the Bendix for carbon monoxide (CO) detection is infrared light absorption. A single infrared light beam is alternately modulated between a sample and reference (CO free) cells. An infrared light detector coupled to the sample and reference cells exhibits a capacitance change proportional to the amount of CO present in the sample cell. The principle of measurement is based on CO having a known characteristic absorption spectra in the infrared range.

1.2 The relationship of detection is as follows:

$$\Delta C \sim 1 - e^{-\Delta cl}$$

where

C is capacitance change

c is CO concentration

l is cuvette length

1.3 Converting the change in capacitance in the detection chamber to an output usable for a recorder requires the use of electronic circuitry and the associated plumbing to condition the sample prior to injection into the sample cell of the detector. For the purpose of calibrating, the analyzer plumbing is also required for injecting zero and span gases.

1.4 This analyzer, like most others, can be subdivided into three systems:

a) pneumatics

b) optics

c) electronics

BENDIX CO ANALYZER

Relationship between capacitance change and CO concentration:

$\Delta C \sim 1 - e^{-\Delta c l}$

where:

C is capacitance change

c is CO concentration

l is cuvette length

ERT

1.5 Basic Infrared Absorption Gas Analyzer Technique optical bench (see Figure 7-5 in manual) consists of:

- infrared light source
- absorption cell of certain pathlength
- detector

1.5.1 Sample air is passed through the absorption cell. CO absorbs (or attenuates) the light and thus the reduction in light is a quantitative measure of the CO present in the sample.

1.5.2 In order to determine how much CO is present in the sample, there is a constant referencing against a reference cell filled with a nonabsorbing (CO free) gas (nitrogen). The detector will produce a change in capacitance if there is an imbalance between the sample and reference chambers (if CO is present in the sample).

2. THE BENDIX 8501-5CA SYSTEM

2.1 Pneumatics (see Figure 7-4 in manual)

2.1.1 All sample lines are 1/4 in. Teflon.

2.1.2 Eight-micron filter - the 8-micron filter is a Balston paper filter located on the rear of the unit. It is used to remove any particulate matter larger than 8 microns and to trap any condensates. Dirt in the filter can restrict flow. It should be replaced as specified in the SOP.

2.1.3 Sample pump - the pump is a Metal Bellows model MB-21 and is used to pressurize the sample to make it flow in and out of the detection chamber.

2.1.4 Pressure relief regulator - the sample flow not required by the analyzer is bypassed by the pressure relief valve to the SAMPLE BYPASS bulkhead connector. The backpressure is indicated by the 0-30 psi pressure gauge. Normally the backpressure is 8 psi (normal operation in SAMPLE mode).

2.1.5 Mode selector valve - manual valve for switching input into detection chamber.

2.1.6 0.3 micron gas filter - gas filter located at front panel to prevent particulates from getting into optics.

2.1.7 Flow adjust needle valve and meter - to monitor and adjust flow within operating parameters of analyzer.

2.2 Optics (refer to Figure 7-5 and Section 4.3 in manual)

2.2.1 Optical bench consists of head assembly, analysis chamber, and detection chamber. There are two types of optical benches:

- "old units" - these have silver colored benches
- "new units" - these have gold colored benches

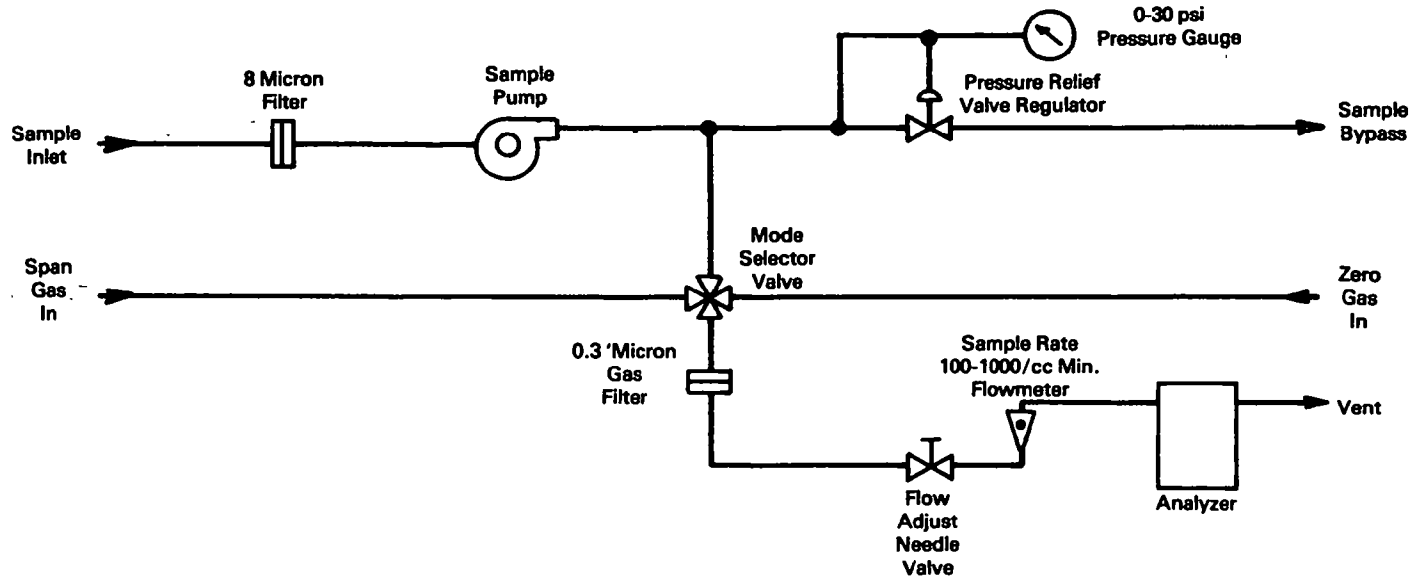

Bendix 8501-SCA Carbon Monoxide Analyzer
Flow Diagram

ERT

2.2.2 Head assembly contains the infrared light source and the chopper motor drive:

- The light source can be repositioned so that the same amount of light passes through both the sample and reference cells.
- The chopper motor alternately "switches" the light source between the sample and reference cells.

2.2.3 Analysis chamber:

- Sampled gas flows at constant rate through sample cell.
- Reference cell is filled and sealed with reference gas (nitrogen).

2.2.4 Detection chamber (following is a simplified explanation - refer to manual for details):

- The detection chamber is filled with a gas that absorbs infrared radiation and converts it to energy in the form of pressure (the effect is equal to heating a gas in a closed container). This pressure causes a piston-like diaphragm (which is actually one side of a capacitor) to move. This movement causes the capacitance value of the capacitor to change.
- The detection chamber is alternately "looking" at the reference and sample chambers.
  - If the sample contains no CO, the light coming from either cell will have the same intensity of IR radiation, thus the variable capacitor will have a constant capacitance which is equated to zero CO concentration.
  - If the sample contains CO, some of the IR radiation energy is absorbed before it reaches the detector and this will be reflected by a proportional movement of the variable capacitor.

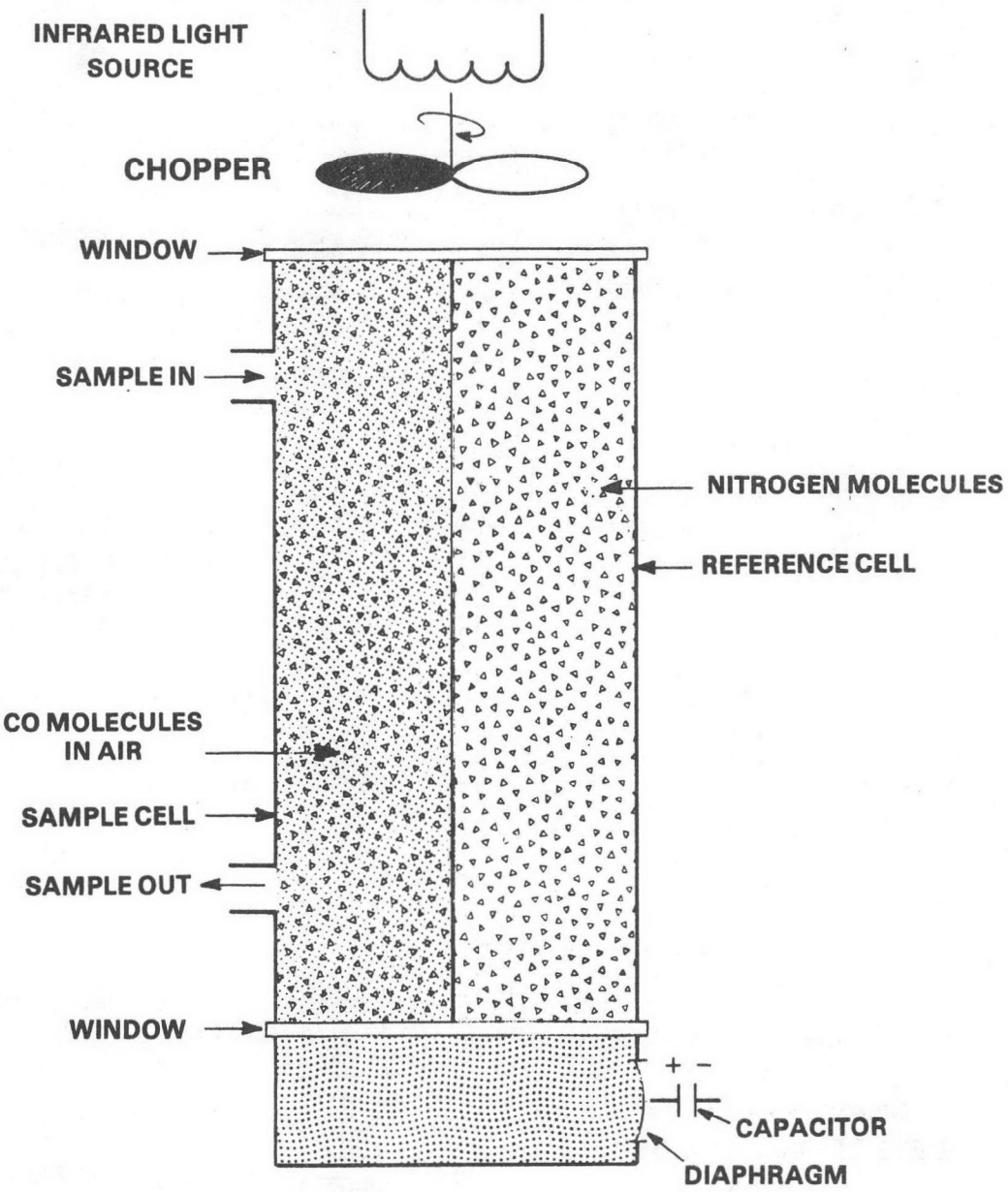

BENDIX CO MONITOR MODEL 8501-5CA
SIMPLIFIED CO DETECTION SYSTEM

ERT

7903053

DETECTOR CELL SIMPLIFIED DIAGRAM

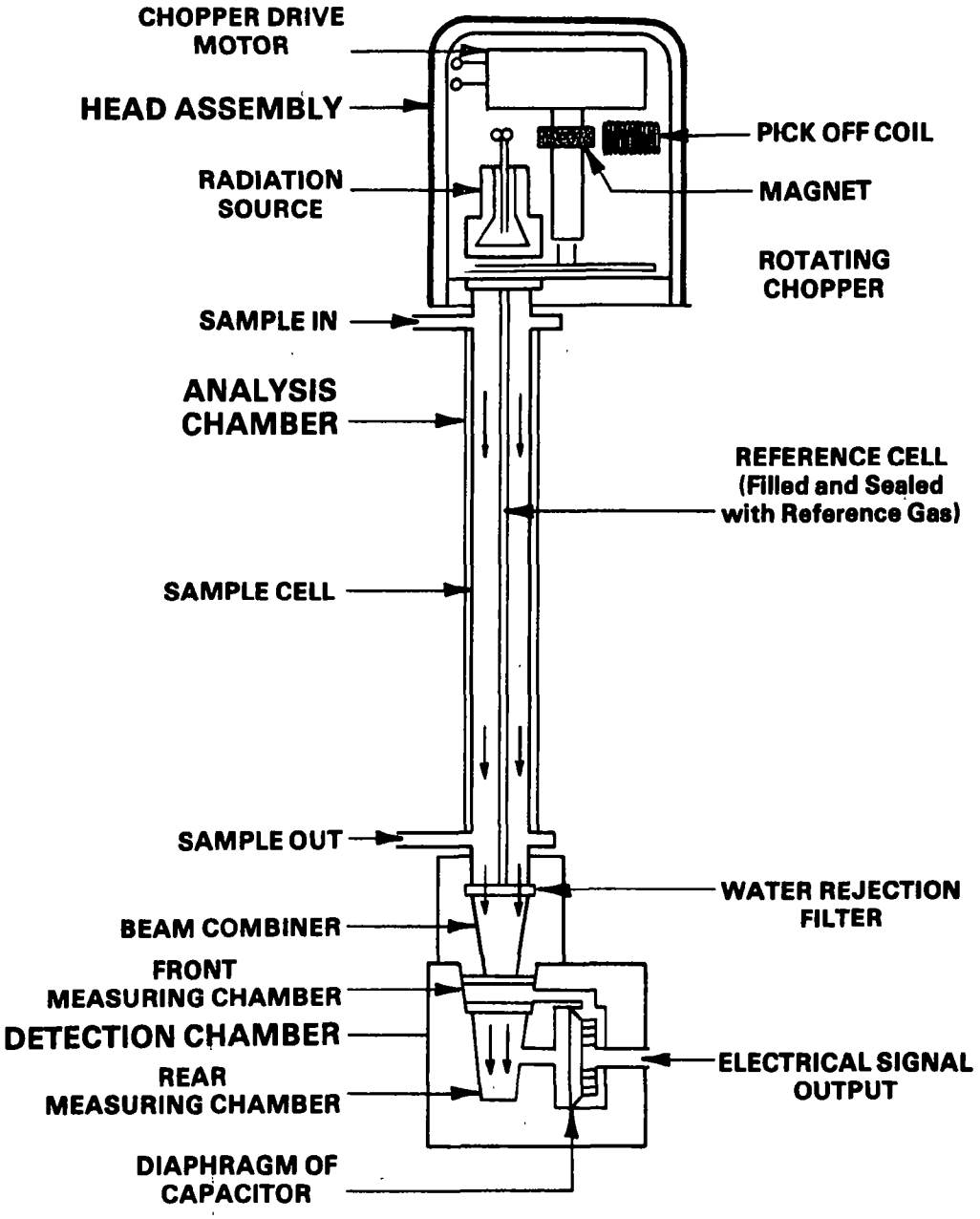

ERT

7904071

BENDIX CO MONITOR MODEL 8501-5CA
DETECTOR CELL
SIMPLIFIED DIAGRAM

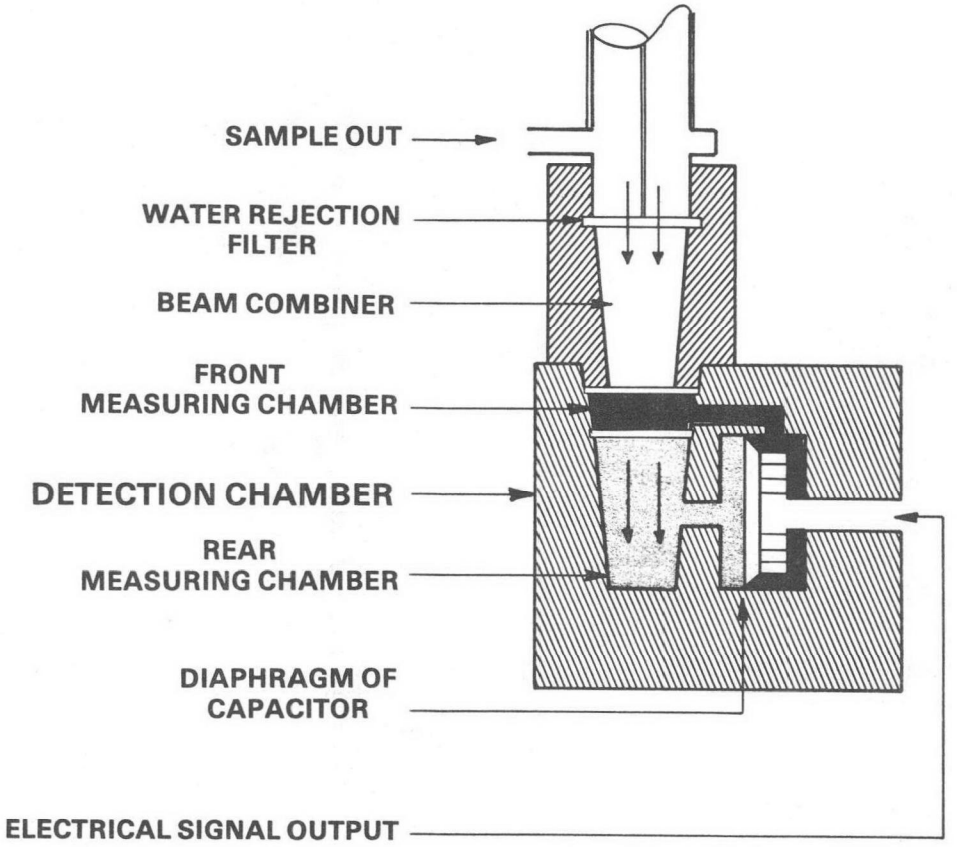

ERT

- The in and out movement of the detector's piston-capacitor plate due to changing pressure in the detector causes a continuous capacitance change. The movement of the capacitor plate can be expressed as a sine wave because of the continuous change from exposure to sample and reference cells. The capacitance change occurs at the same frequency as the chopper switches the light from one cell to the other (6.2 Hz).

2.3 Electronics (for complete details see Section 4.4 of manual)

2.3.1 Analyzer card can be subdivided into 11 functional circuits:

- power supply
- 300 KHz oscillator
- capacity to voltage converter
- low pass filter
- amplifier
- unity gain inverter
- chopper reference signal shaper
- synchronous demodulator
- linearizer
- chopper motor driver
- temperature control

2.3.2 Power Supply:

- ±15 VDC for signal processing electronics
- +8 VDC for infrared source

2.3.3 300 KHz Oscillator provides carrier frequency for capacitance to voltage converter.

2.3.4 Capacitance to Voltage Converter in conjunction with the variable capacitance in the detector cell acts as an amplitude modulator.

2.3.5 Low Pass Filter removes 300 KHz carrier from output signal of capacitance to voltage converter.

2.3.6 Amplifier provides required signal gain.

2.3.7 Unity Gain Inverter inverts signal so that it (along with the noninverted signal) reaches the synchronous demodulator.

2.3.8 Chopper Reference Signal Shaper senses the chopper action in optical bench head assembly and triggers the synchronous demodulator so that the signals coming into it become fullwave rectified.

2.3.9 Synchronous Demodulator fullwave rectifies the incoming signal.

2.3.10 Linearizer compensates for non-linearity inherent in measurements at high CO concentrations.

2.3.11 Chopper Motor Driver drives motor of the chopper in head assembly of the optical bench so that light is alternated between sample and reference cells at a 6.2 Hz rate.

2.3.12 Temperature Control Circuit maintains interior temperature of the analyzer at 50°C.

2.3.13 Control Card contains zero and span trim pots, a range change amplifier, and a filter circuit which adds a time constant which filters out noise in the operation.

7903201

Bendix 8501-5CA CO Analyzer Electronic Signal Processing Block Function Diagram

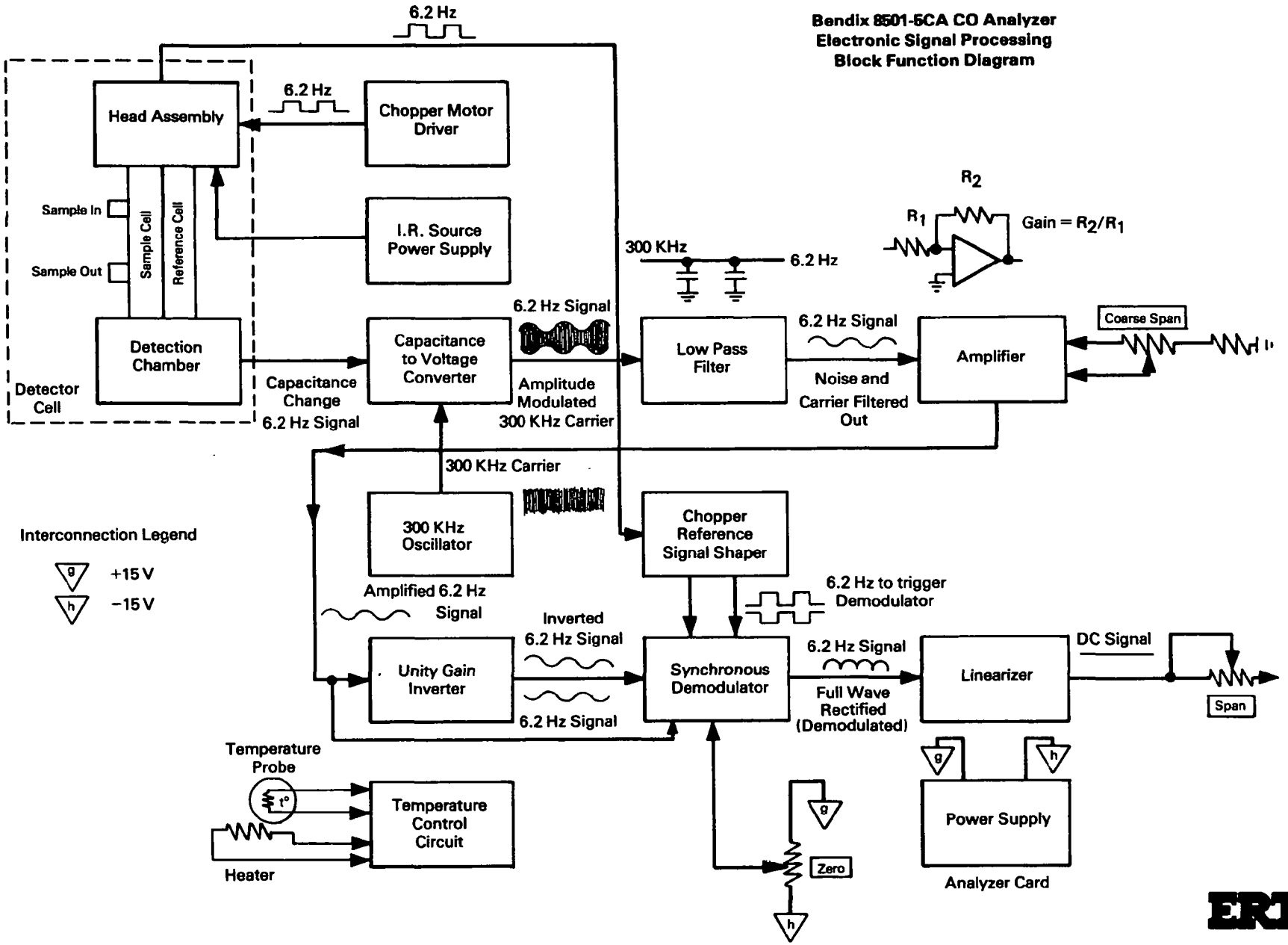

ERT

7903052

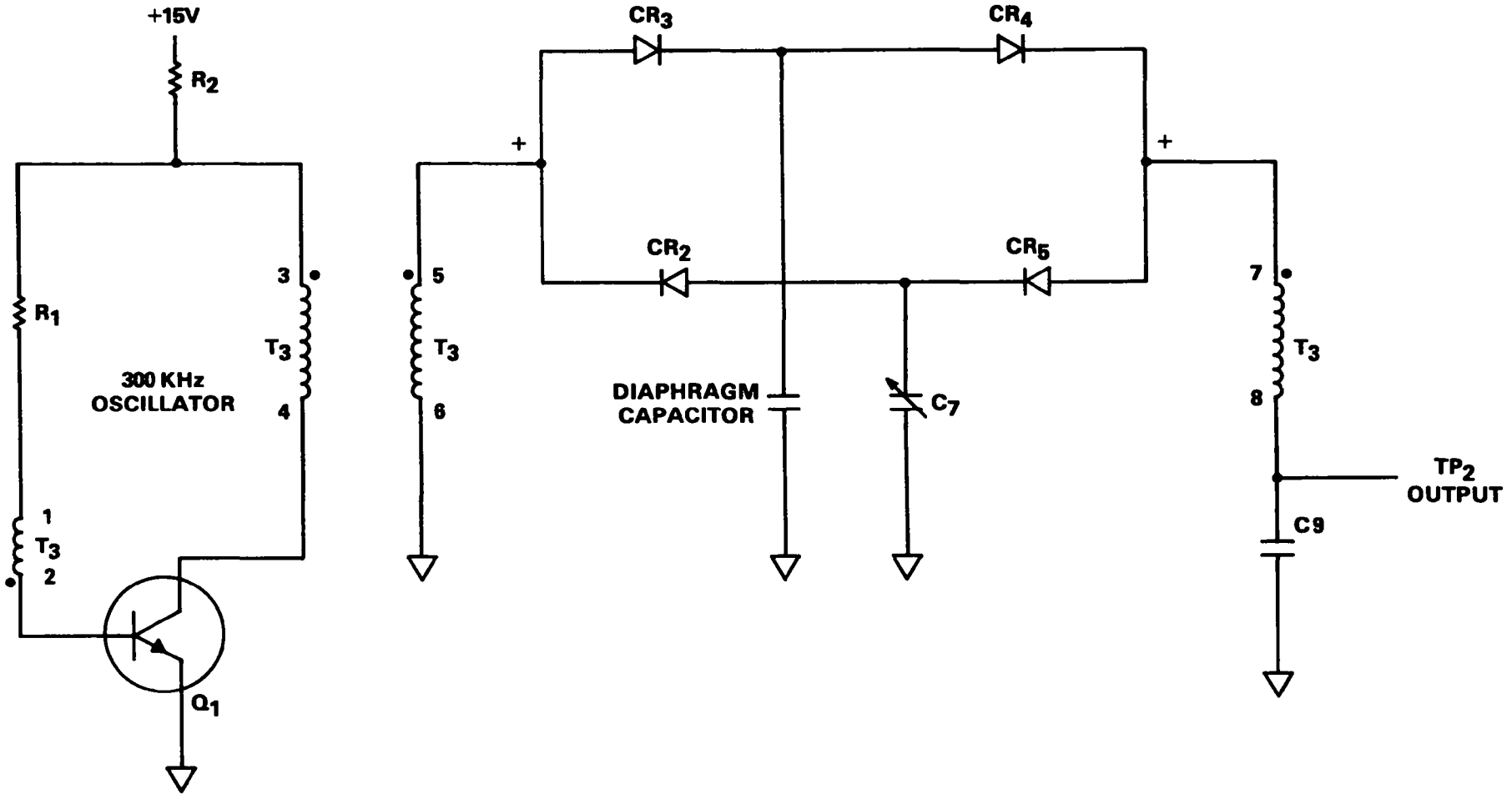

BENDIX CO MONITOR MODEL 8501-5CA
SIMPLIFIED CAPACITY TO
VOLTAGE CONVERTER
SCHEMATIC

ERT

SIMPLIFIED SYNCHRONOUS DEMODULATOR SCHEMATIC

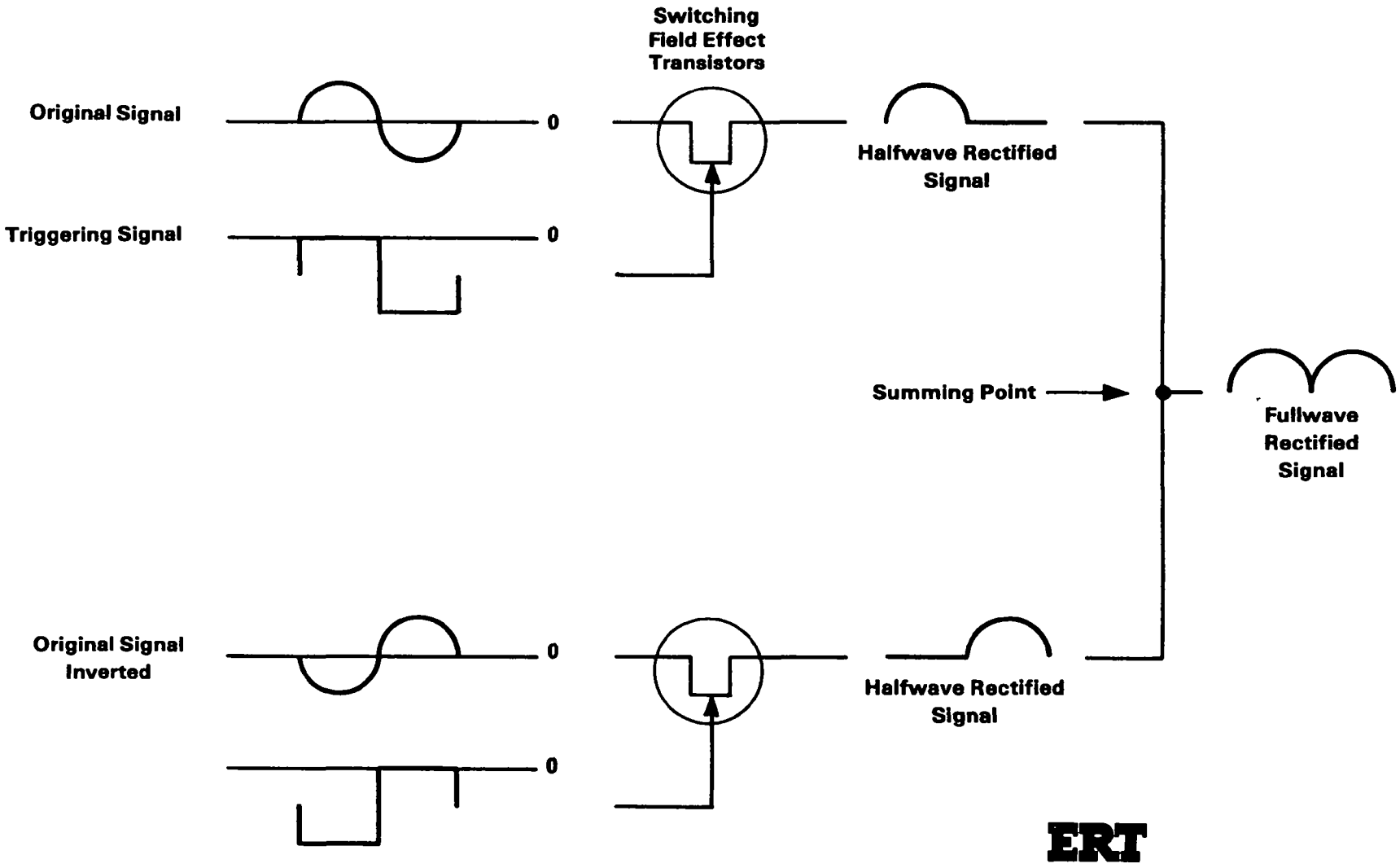

SYNCHRONOUS DEMODULATOR
SIMPLIFIED SCHEMATIC
BENDIX 8501-5CA
CO ANALYZER

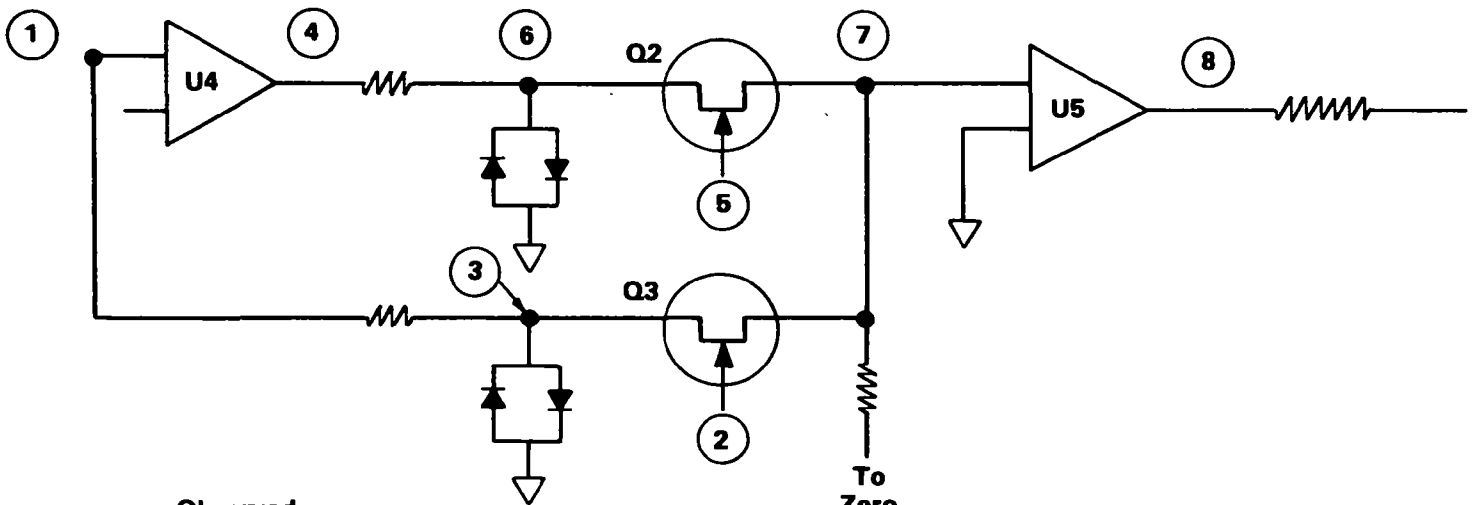

Observed
Waveforms

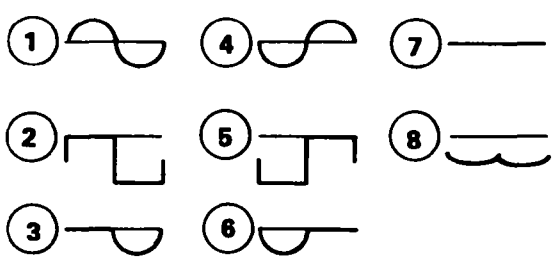

ERT

3. SETUP/START-UP - INITIAL TURN ON

3.1 Supporting Materials

- Digital Multimeter (Fluke 8000 or equivalent)
- Oscilloscope
- Laboratory calibration system (span gas dilution system or bottled CO in required concentrations, Z-1 air)
- 8501-5CA manual

3.2 Pre-Start Up

3.2.1 Put the instrument on the bench.

3.2.2 Remove the instrument's two front covers, thus exposing the internal components.

3.2.3 Check for possible damage during shipment, i.e., loose pc board, etc.

3.2.4 Slide out optical bench drawer and inspect for visible damage.

3.2.5 Inspect all the tubing connections, ensure that they are leak tight.

3.2.6 Remove all foreign material from the instrument.

3.2.7 Replace input sample filter and gas filter (semiannually).

3.3 Start Up Inspection Procedure

3.3.1 Install the analyzer in the rack with covers off.

3.3.2 Connect laboratory zero air or external calibrator zero air to the analyzer sample port.

3.3.3 Connect external calibration source of CO at a 1,000 ppm concentration (use highest concentration available up to 1,000 ppm CO if 1,000 ppm concentration is not available).

3.3.4 Connect the recorder output to a 0-10 V recorder and a DVM.

3.3.5 Verify that the front panel power switch (in range selector) and pump switch are in off position.

3.3.6 Plug the instrument power cord to 115 V power outlet (grounded).

3.3.7 Turn the pump switch on.

3.3.8 Inspect the pump for proper operation, refer to manual Section 5.2.3.

3.4 Adjustment

3.4.1 Turn the instrument on and allow it to stabilize for 8 hours (a minimum of 2 hours) prior to proceeding with adjustment procedures.

3.4.2 Slide the optical bench drawer forward on its track.

3.4.3 Refer to the enclosed "Bendix 8501-5CA Infrared CO Analyzer Adjustment Checklist." Put zero and span pots in the 500 position.

3.4.3.1 Check ±15 VDC Analyzer Cord power supply.

3.4.3.2 Check the +8 VDC IR Source power supply.

3.4.3.3 Check the output of the chopper motor driving circuit.

3.4.3.4 Check the output of the 300 KHz oscillator.

3.4.3.5 Check chopper motor drive reference signal (at R-58).

3.4.3.6 Check output of the Chopper Reference Signal Shaper.

3.4.3.7 Adjust C-7. Refer to Section 5.5.1 of the manual but do not span and zero instrument until the following adjustments are completed.

3.4.3.8 Adjust zero balance of the optical system. Refer to Section 5.5.2 of the manual. Do not span and zero the instrument until the following adjustments are completed.

3.4.3.9 Adjust the phasing adjustment of the optical bench. Refer to Section 5.5.3 of the manual. In addition to monitoring TP6 for a maximum negative voltage as indicated in the manual, connect an oscilloscope to the cathode of CR-7. Proper phasing has been achieved when the observed waveform is like an inverted greek letter omega (ω).

3.4.3.10 Zero the instrument following the procedure in Section 3.3.1 of the manual.

3.4.3.11 Span the instrument following the procedure in Section 3.3.2 of the manual. Use span gas concentration near 40 ppm.

Note: During operation maintain flow at a ball height of 3 cm. In sample mode back pressure should be about 8 psi.

Bendix 8501-5CA Infrared CO Analyzer

Adjustment Checklist

Test Point	Designated Value	Observed	Most Probable Malfunction Cause — See Manual —	Remedial Action
Analyzer Card				
+15 (Note 2)	+15 ± .03 volts		Analyzer Card Power Supply	A
−15 (Note 2)	−15 ± .03 volts		Analyzer Card Power Supply	A
TP10 (Note 2)	+8.0 ± .1 volts		IR Source Power Supply	A
TP9D (Note 3)	24 ± volt peak-to-peak square wave at 62 ± 3 Hz rate		Chopper Drive Circuit	A
T3 Terminal 7 (Note 3)	110 ± 5.5 volts peak-to-peak sine wave at 300 ± 30 kHz rate		300 KHz Oscillator	A
R58 (Note 3)	Approximately 150 millivolts peak-to-peak triangular waveform		Chopper Motor	A
TP7 (Note 3)	0 to −12 volt square wave at a 6.2 Hz rate		Chopper Motor Reference Signal Shaper	A
TP2 (Note 2)	0 ± 10 millivolts		C-7 Adjustment	B
TP6 (Notes 2 and 4)	0 ± 50 millivolts		Zero Balance Adjustment	C
TP6 (Notes 2 and 5)	− 6.93 volts		Phasing Adjustment	D
TP9 (Notes 2 and 5)	−8.0 volts		Linearizer Circuit	A
TP5 (Notes 3 and 5)	Approximately 6 volts peak-to-peak triangular wave at a 6.2 Hz rate		Amplifier Circuit	A
Control Card				
TP13 (Notes 2 and 5)	+10 volts			A
TP14 (Notes 2 and 5)	+10 volts			A

Notes:
1. All measurements referenced to common unless otherwise noted.
2. Measured with a high imput impedance voltmeter of 1% accuracy.
3. Measured with an oscilloscope.
4. Measurement performed with zero gas injected into instrument.
5. Measurement performed with span gas of 1000 ppm CO concentration injected into the instrument. With lower ppm span gases, the output will be proportionately lower.

Remedial Action Key:
- A. Replace board.
- B. Adjust C-7, refer to manual section 5.5.1.
- C. Adjust zero balance of optical bench, refer to section 5.5.2.
- D. Correct phasing adjustment, refer to section 5.5.3.

ERT

BENDIX 8501-5CA CO ANALYZER
ANALYZER CARD TEST POINTS

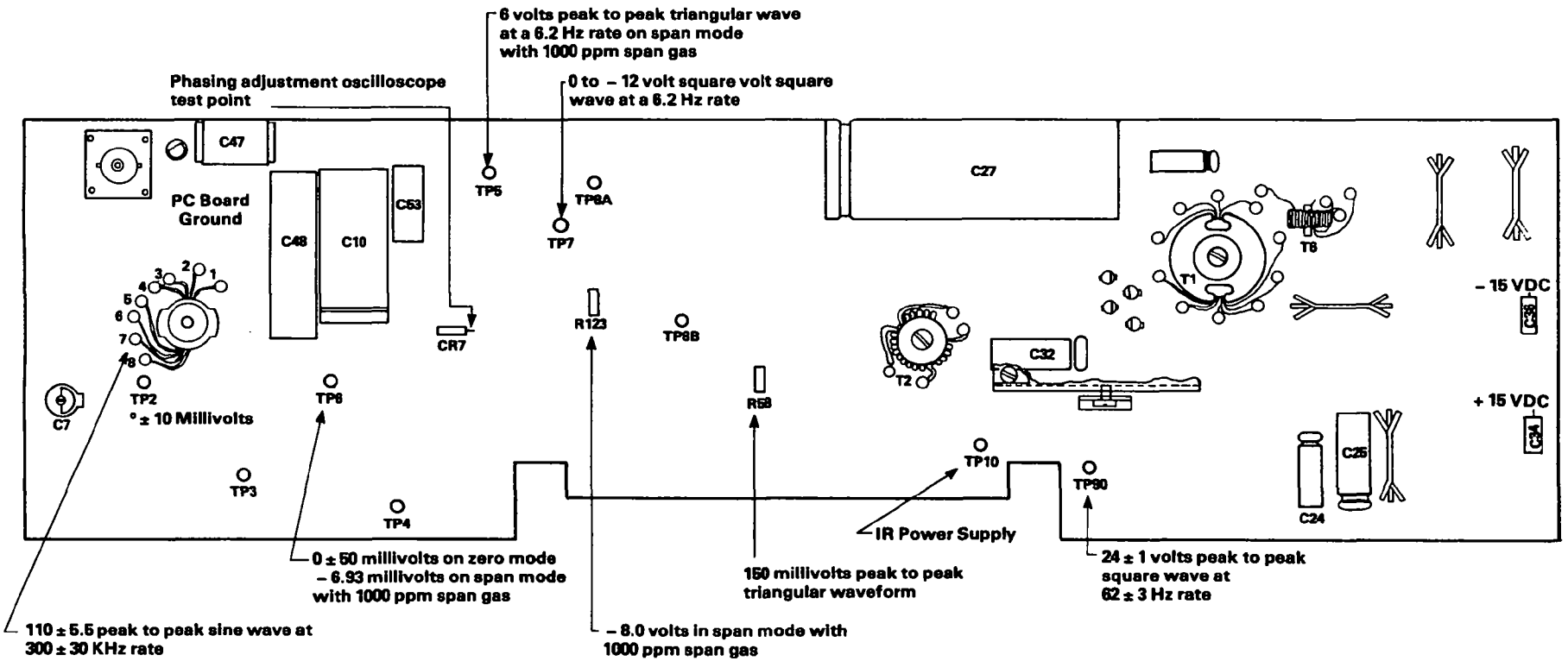

ERT

TECO SO_2 ANALYZER

MODEL 43

THERMO ELECTRON MODEL 43
PULSED FLUORESCENT SO_2 ANALYZER

Prepared Class Notes

1. INTRODUCTION

1.1 Sulfur dioxide, which is one of the products of combustion of most organic fuels, is generally considered to be one of the largest pollutants discharged into the atmosphere by man. Because of this, ambient air monitoring programs almost always require that the concentration of this material be determined. Many of the instruments in use today for the monitoring of sulfur dioxide suffer from several shortcomings. First generation instrumentation, employing automated wet chemical procedures, suffer from interferences by other pollutants such as ozone. Additionally, an inordinate amount of time and manpower is required to maintain them in operating condition. Newer techniques, generally considered as second generation analyzers, tend to be non-specific to sulfur dioxide, require complex flow and temperature control, and require support equipment such as hydrogen cylinders or generators.

Thermo Electron's patented (#3,845,309) Pulsed Fluorescent concept is generally considered as the first third generation ambient sulfur dioxide analyzer.

1.2 The following equations describe the fluorescence phenomenon:

$$SO_2 + h\nu_1 \qquad SO_2^*$$

$$SO_2^* \qquad SO_2 + h\nu_2$$

where:

SO_2 - Sulfur Dioxide
SO_2^* - electronically excited SO_2
$h\nu_1$ - ultraviolet radiation, 230-190 nm wavelength
$h\nu_2$ - fluorescence

(1) $SO_2 + h\nu_1 \rightarrow SO_2^*$

(2) $SO_2^* \rightarrow SO_2 + h\nu_2$

SO_2 — Sulfur Dioxide

SO_2^* — Electronically Excited SO_2

$h\nu_1$ — Ultraviolet Radiation, 230-190 nm Wavelength

$h\nu_2$ — Fluorescence

Thermo Electron Model 43 Pulsed Fluorescent SO_2 Analyzer

Theory of Operation

ERT

7904115

1.3 The method used in the TECO for sulfur dioxide (SO_2) detection is Pulsed Fluorescence. A gas sample is submitted to a source of pulsed ultraviolet illumination through a monochromatic filter (narrow bandpass). SO_2 molecules, energized by the high intensity pulsed light source, emit an SO_2 specific illumination which, through a second narrow band filter, impinges upon the sensitive surface of a photomultiplier tube. The emitted light is linearly proportional to the concentration of SO_2 molecules in the sample. Electronic, solid state amplification of the output of the photomultiplier tube and signal conditioning for the elimination of signal noise, provide a meter reading and an electronic analog signal for recorder output.

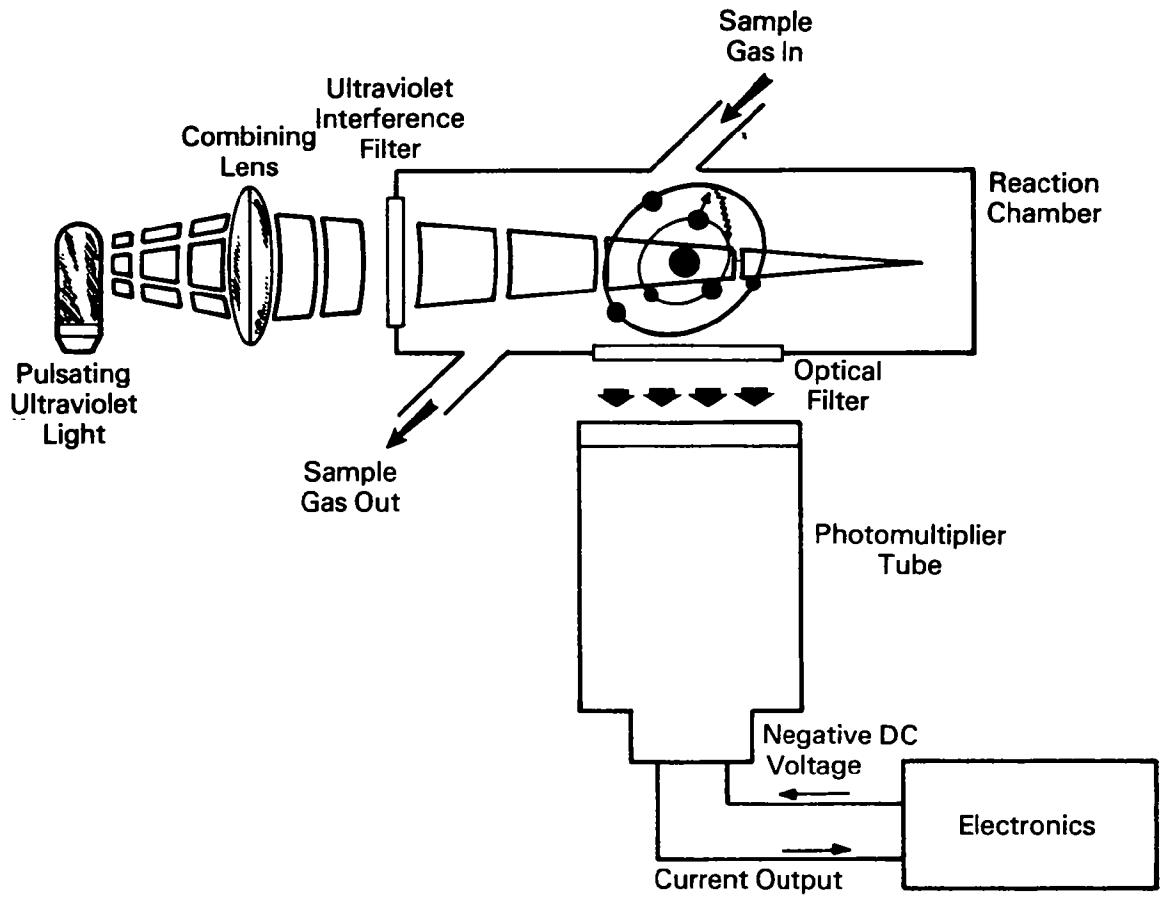

Thermo Electron Model 43 Pulsed Fluorescent SO_2 Analyzer

Principle of Operation

ERT

2. THE PULSED FLUORESCENT SYSTEM

The basic hardware of the Pulsed Flurorescent SO_2 analyzer can be classified into three (3) sections: pneumatics, optics, and electronics.

2.1 Pneumatics

2.1.1 The pneumatics section is concerned with the transport of the gases into and out of the instrument to achieve an accurate analysis of the sample gas.

2.1.2 There are three inlet ports at the rear of the instrument: sample, span and zero. Flow into the instrument is determined by a front panel selector switch. In the sample mode, both the sample valve and the zero valve are de-energized, thus allowing gas to be drawn through the sample port. Moving the front panel switch to zero or span causes gas to be drawn into the zero and span ports respectively.

The flow is then directed to the tube side of a permeation drying device. This device removes water vapor from the gas stream while leaving the SO_2 concentration uneffected. It operates on a selective permeation principle, allowing only water molecules to pass through the teflon-like membrane. The driving force for water removal is a differential partial pressure of water across the membrane. This is obtained within the instrument by taking the dried air, reducing its pressure across a capillary and feeding it into the shell side of the dryer. Since the membrane is just a transfer medium, it never needs to be replaced because of water saturation. The dryer should give many years of acceptable performance within the instrument.

Exiting the tube side of the dryer, the sample flows through a pressure-reducing capillary which provides the reduced pressure necessary for the operation of the permeation dryer. The sample is then directed through the aromatic hydrocarbon cutter, which removes the effect of these hydrocarbons on the fluorescent measurement, and then the fluorescent chamber where it undergoes analysis.

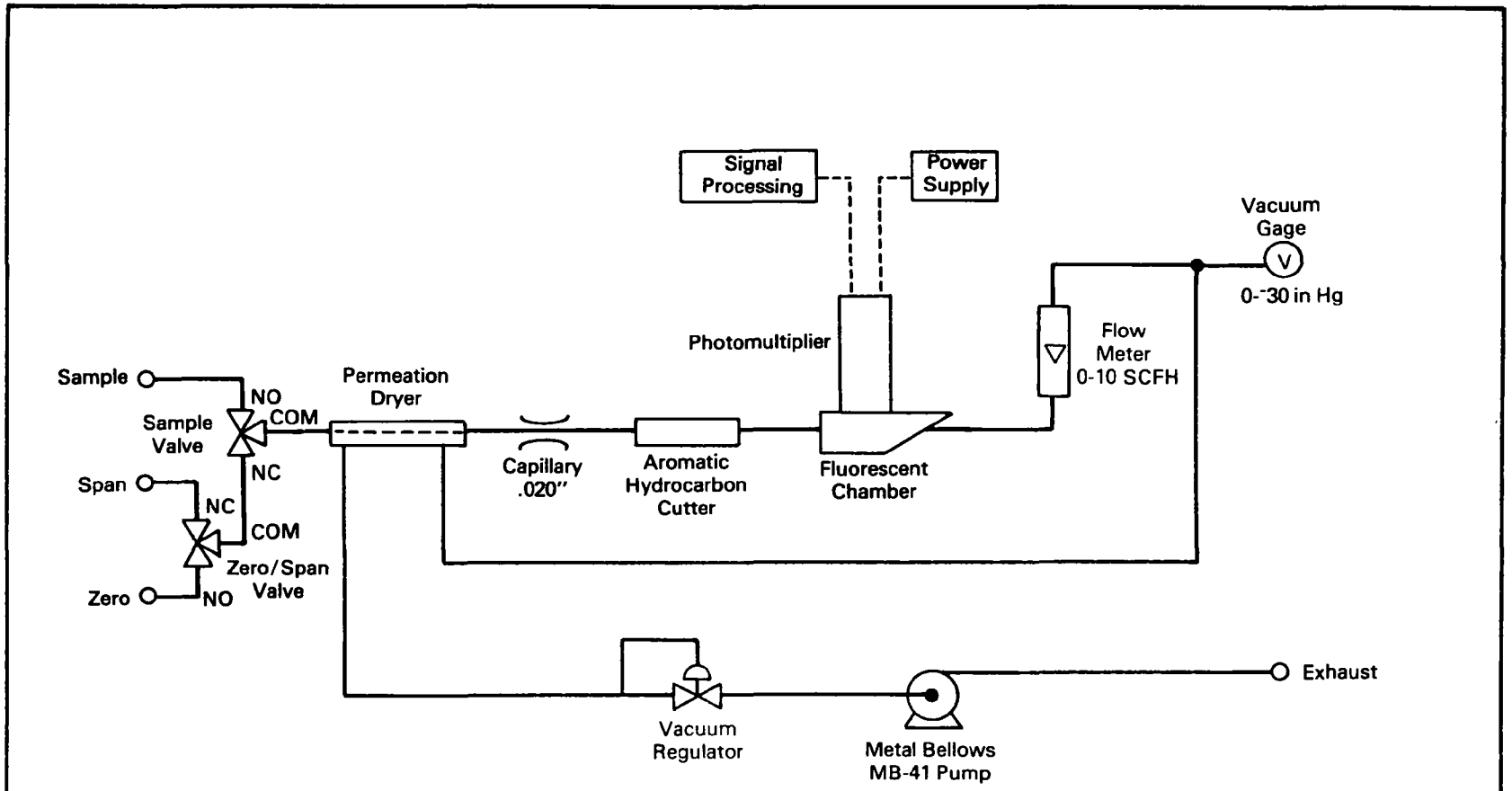

Thermo Electron Model 43 Pulsed Fluorescent SO_2 Analyzer

Gas Flow Schematic

ERT

PERMA PURE DRYER
UTILIZING PERMEATION DISTILLATION DRYING TECHNIQUE

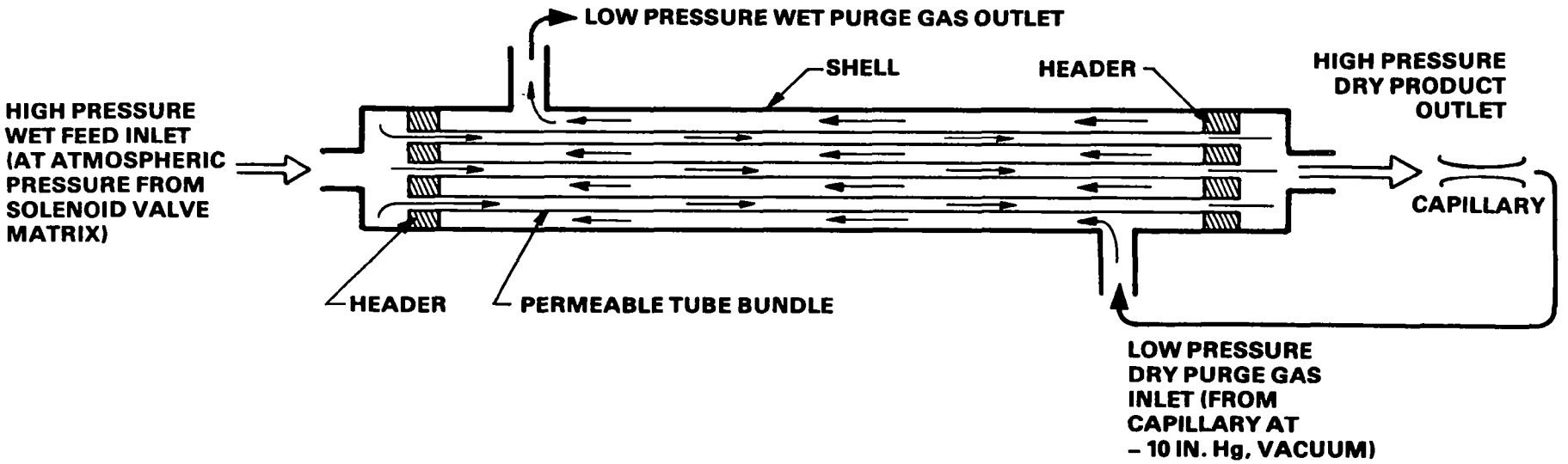

ERT

2.1.3 The fluorescent principle for SO_2 detection is insensitive to flow. A reading on the flowmeter between 1 and 4 SCFH is satisfactory. However, the response time of the measurement is a function of sample flow; the higher the flow the faster the response.

2.1.4 A vacuum regulator, in conjunction with the sample pump, controls the absolute pressure in the system.

2.1.5 All sample lines are constructed of FEP Teflon.

2.1.6 Sample flow is approximately 1.3 liters/min.

2.2 Optics

2.2.1 The original ultraviolet interference filter had a bandwidth of 2300 Å - 1900 Å (230 nm - 190 nm). The latest filters, (July 1978 to present) have a spike bandwidth of 2200 Å (220 nm).

2.2.2 Optical Filter - bandwidth is proprietary information.

2.2.3 Photomultiplier Tube - RCA 4501-V12, Cathode blue sensitivity, nonstandard, specially selected tube.

2.3 Electronics

2.3.1 The electronics section has two main areas of interest: the pulsed ultraviolet light source and the signal processing electronics.

2.3.2 Several major reasons why the UV lamp is operated in the pulsed mode.

2.3.3 UV Flash Lamp - 12-18 month life, under slight positive pressure. Quartz window, glass envelope. Pulsed at 10 hertz rate.

2.3.4 Pulsed photon energy from the fluorescing SO_2 is detected by a photomultiplier tube where it is converted into a current flow. A preamplifier/bandpass filter integrates the current into a voltage waveform. From here the signal is connected to an electronic gate which is switched synchronously with the flashing lamp energy pulses. The signal

is then filtered to screen out high frequency noise, using an adjustable time response filter before going to the PPM meter and the recorder output. The output voltage can be selected from a voltage divider chain on an output printed circuit board. For calibration, the high voltage to the PMT or the gain of the final amplifier is adjusted until the instrument agrees with a known concentration of SO_2.

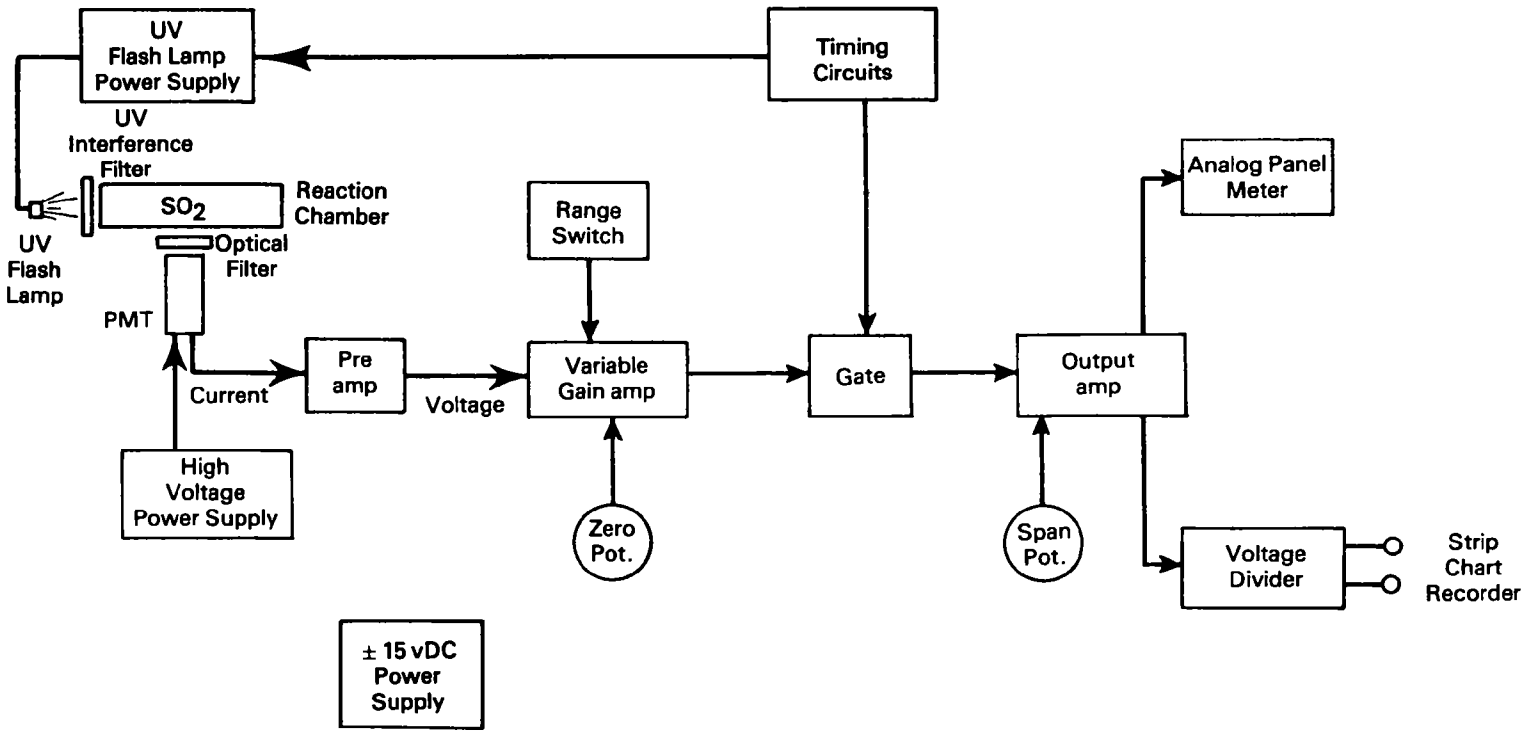

Thermo Electron Model 43 Pulsed Fluorescent SO_2 Analyzer

Electronic Block Diagram

ERT

THERMO ELECTRON MODEL 43 PULSED FLUORESCENT SO_2 ANALYZER
ULTRAVIOLET LITE PAC ASSY

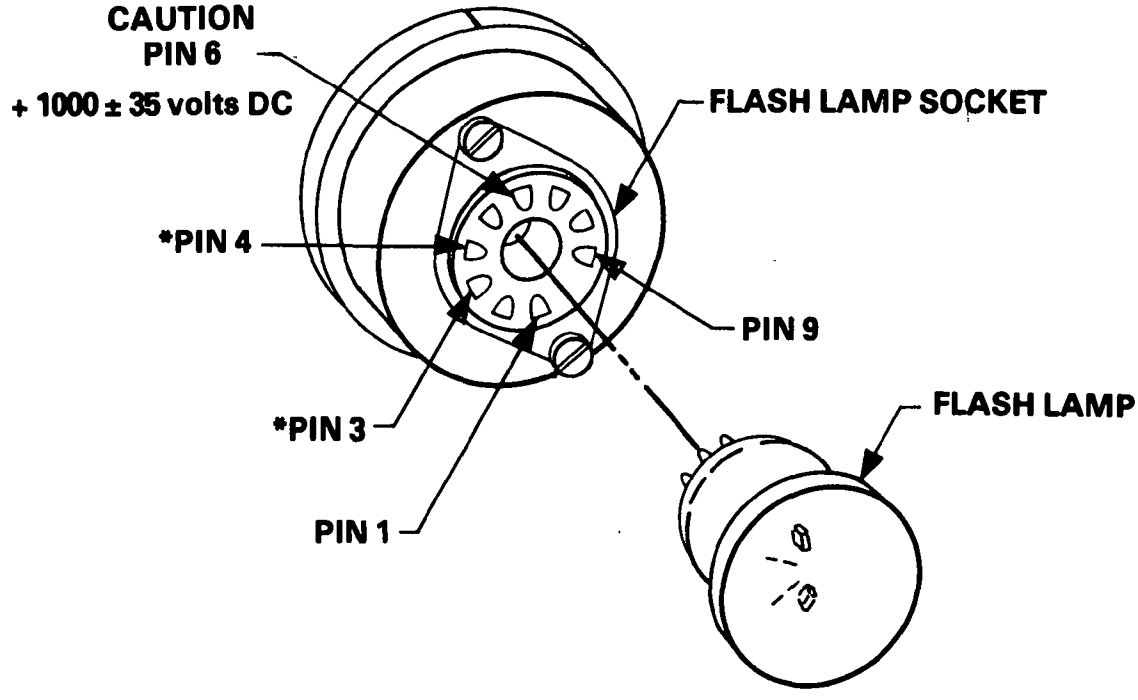

*** Voltage level dependent on revision of lite pac.**

ERT

THERMO ELECTRON MODEL 43 PULSED FLUORESCENT SO_2 ANALYZER
ULTRAVIOLET LITE PAC SCHEMATIC

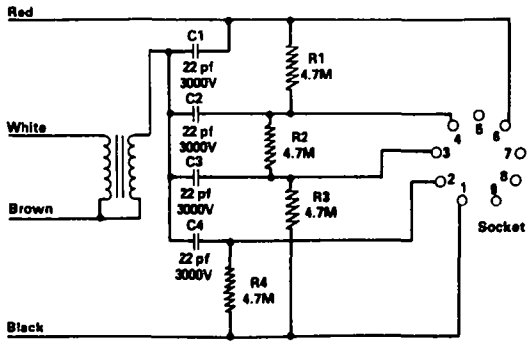

Discrete Component Type

Pin Voltages

Pin	Voltage
3	+ 280 ± 10 VDC
4	+ 530 ± 20 VDC
6	+ 1000 ± 35 VDC

* (Where all the wires are approx. the same thickness.)

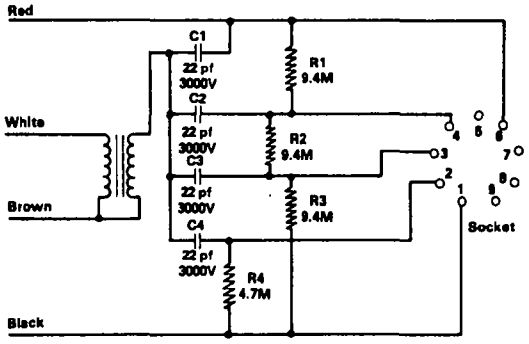

Printed Circuit Board Type

Pin Voltages

Pin	Voltage
3	+ 213 ± 10 VDC
4	+ 432 ± 20 VDC
6	+ 1000 ± 35 VDC

* (Where the Black & Red wires are much thicker than the White & Brown wires.)

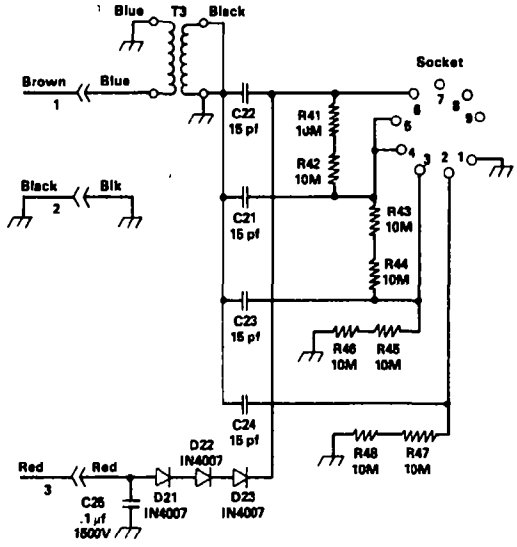

Teco Type

Pin Voltages

Pin	Voltage
3	+ 150 ± 10 VDC
4	+ 300 ± 20 VDC
6	+ 1000 ± 35 VDC

* (Where only three wires are used.)

ERT

3. PERFORMANCE

3.1 The United States Environmental Protection Agency has set up a test procedure for automated air pollution analyzers in order to test their performance and determine their consistency relationship to a standard reference method. This equivalency procedure consists of two main tests.

3.1.1 The first is concerned with the performance of the instrument. The performance parameters tested are as follows:

1) Range: The range of the instrument in parts per million must be defined.

2) Noise: The noise from the instrument is defined as one standard deviation around a mean reading at 0% of scale and at 80% of scale.

3) Lower Detectable Limit: This is defined as twice the noise level.

4) Interference Equivalent: The interference equivalent for single chemical species and the total interference equivalent are specified. Interference equivalent is determined by testing the analyzer for response to substances other than that measured by the instrument.

5) Zero Drift: The zero drift for 12 and 24 hours has to be specified.

6) Span Drift: The span drift at 80% of full-scale range and at 20% of full-scale range must be determined.

7) Lag Time: The lag time in minutes must be determined.

8) Rise Time: The rise time for the instrument to 95% of full-scale must be specified.

9) Fall Time: The fall time to 95% of final reading must be specified.

10) Precision: The precision at 20% of the full-scale and at 80% of the full-scale range must be determined. Precision is defined as a one standard deviation around a given concentration.

The Thermo Electron Model 43 Fluorescent SO_2 Analyzer had been tested in accordance with the Environmental Protection Agency procedures for performance.

3.1.2 The second portion of the Equivalency Testing procedure is to determine if the instrument demonstrates a consistent relationship with the Federal Reference procedure for monitoring SO_2. The Federal method for measuring SO_2 is the P-rosaniline method. Both 24-hour continuous tests and one-hour continuous tests are required to show consistency. The 24-hour tests are conducted at low concentrations (0.02-0.05 ppm); medium concentrations (0.10-0.15 ppm) and high concentrations (0.40-0.50 ppm). The one-hour tests are all performed at the high concentration level. The test involves measuring ambient air spiked with the above level concentrations to determine if the instrument agrees with the Reference method.

3.1.3 The Model 43 demonstrated a consistent relationship with the EPA's Reference method for SO_2. Equivalent designation was granted (EQSA-0276-0009).

4. SET UP STARTUP PROCEDURES

(Refer to Manual Sections II, III, and IV)

5. LEAK CHECK PROCEDURE

5.1 Determination for presence of external leaks in the gas flow system.

Equipment required:

1) 9/16 inch open end wrench

2) Three 1/4 inch O.D. tubing end caps

3) Flowmeter, 0-200 cc/min or similar range

4) Approximately six inches of 1/4 inch O.D. tubing

5.1.1 Turn instrument power off.

5.1.2 Remove all lines from bulkhead fittings on rear panel of instrument.

5.1.3 Cap the sample, span and zero inlet ports with 1/4 inch stainless steel end caps. Properly tighten caps.

5.1.4 Turn instrument power on.

5.1.5 Slowly increase the vacuum reading on the sample vacuum guage by adjusting the vacuum regulator clockwise. Continue doing so until a maximum vacuum reading is obtained. The maximum reading should be between -15 and -16 inches of mercury. A maximum vacuum reading less than -12 inches of mercury could indicate sample pump inefficiency.

5.1.6 Let instrument stabilize for one minute. (Note that the ball in the sample flowmeter is slowly descending to 0 SCFH.)

5.1.7 The ball in the sample flowmeter should now be sitting on the bottom of the flowmeter. Because this flowmeter is so coarse (0-10 SCFH), this would only indicate that there are no major leaks in the analyzer.

5.1.8 Turn instrument power off.

5.1.9 Remove cover from analyzer.

5.1.10 Disconnect the FEP Teflon tubing from the rear, top port of the Perma Pure Dryer at the sample vacuum regulator. Install the 0-200 cm/min flowmeter inline by connecting the just loosened line to the bottom (input) port of the flowmeter. Connect the six inch piece of tubing to the top (output) fitting of the flowmeter. Complete the installation by connecting the remaining end of the six inch piece of tubing to the sample vacuum regulator fitting.

5.1.11 Turn instrument power on.

5.1.12 Repeat step 5.1.6.

5.1.13 The ball in the 0-200 cc/min flowmeter should now be sitting at the bottom of the flowmeter. This would indicate that there are no external leaks in the analyzer.

5.1.14 Turn instrument power off.

5.1.15 Remove 0-200 cc/min flowmeter from instrument and re-connect plumbing to original configuration.

5.1.16 Remove end caps from the sample, span, and zero input ports.

5.2 Determination for presence of internal leaks across the ports of the sample and span/zero solenoid valves.

5.2.1 With the 6 inch piece of tubing still connected to the top (output) fitting of the 0-200 cc/min flowmeter, connect the other end of the piece of tubing to the "sample" inlet port on the instrument's rear panel.

5.2.2 Turn instrument power on.

5.2.3 Adjust sample vacuum regulator for a reading of -10 in. Hg. on the vacuum gauge.

5.2.4 Turn input mode switch to "sample" position. (Note ball in 0-200 cc/min flowmeter should now be pegged at the top of the scale.)

5.2.5 Alternately turn the input mode switch to the "span" and "zero" positions. Note that the 0-200 cc/min flowmeter ball will drop and sit at the bottom of the scale indicating that there is no flow into the "sample" port while the instrument is in the "span" or "zero" modes.

5.2.6 Remove flowmeter from "sample" port and connect to "zero" port.

5.2.7 Alternately turn the input mode switch to the "span" and "sample" positions. Note that the 0-200 cc/min flowmeter ball will drop and sit at the bottom of the scale indicating that there is no flow into the "zero" port while the instrument is in the "sample" or "span" modes.

5.2.8 Remove flowmeter from "zero" port and connect to "span" port.

5.2.9 Alternately turn the input mode switch to the "zero" and "sample" positions. Note that the 0-200 cc/min flowmeter ball will drop and sit at the bottom of the scale indicating that there is no flow into the "span" port while the instrument is in the "sample" or "zero" modes.

DASIBI O_3 ANALYZER

MODEL 1003 PC

DASIBI MODEL 1003PC
OZONE ANALYZER
PREPARED CLASS NOTES

DASIBI MODEL 1003-PC OZONE MONITOR

Prepared Class Notes

1. INTRODUCTION

1.1 The method used in the Dasibi for ozone (O_3) detection is light absorption. Because of the particular structure of the O_3 molecule, it will absorb light energy at and about the wavelength of 254 nanometers (nm) [long ultraviolet (UV) region]. No other molecule normally found in ambient air will absorb as much light energy at this frequency as O_3.

1.2 Beer-Lambert Law

$$I_{out} = I_{in} \exp(-_xLC)$$

I_{out} = Light Intensity Out

I_{in} = Light Intensity In

X = Absorption Coefficient

L = Path Length

C = Concentration

1.3

VARIABLES		CONSTANT
DEPENDENT	INDEPENDENT	
Light Intensity	Flow	Absorption Coefficient
Pressure		
Temperature		
Concentration		
Path Length		

1.4 Basic UV Photometer Technique

Measuring cell consists of:

- UV source 254 nm
- Absorption cell of certain path length
- Detector

1.4.1 Sample air is passed through the absorption cell. Ozone attenuates the light. The reduction in light is a quantitative measure of the O_3 present in the sample.

1.4.2 Questions

- How much light did we start with?
- How much light is lost in the cell with no O_3 present?
- How can one tell zero concentration of O_3 if some absorption takes place with no O_3 present?
- What happens when the light source changes intensity?
- What happens if the detector's sensitivity changes?

1.4.3 Conditions for Using UV Photometry

- An air sample with a zero O_3 concentration.
- An air sample identical to the first in its light absorbing properties except for the unknown O_3 concentration.
- A UV light source of known wavelength and fixed intensity.
- A stable detector.
- A known and fixed path length.
- The value of X, the absorption coefficient at the wavelength being used.
- Standard pressure and temperature reference.

BEER-LAMBERT LAW

BASIC EQUATION

$$I_{OUT} = I_{IN}e^{-(XLC)}$$

I_{IN} = LIGHT INTENSITY IN

I_{OUT} = LIGHT INTENSITY OUT

X = ABSORPTION COEFFICIENT

L = PATH LENGTH

C = CONCENTRATION

ERT

7904140

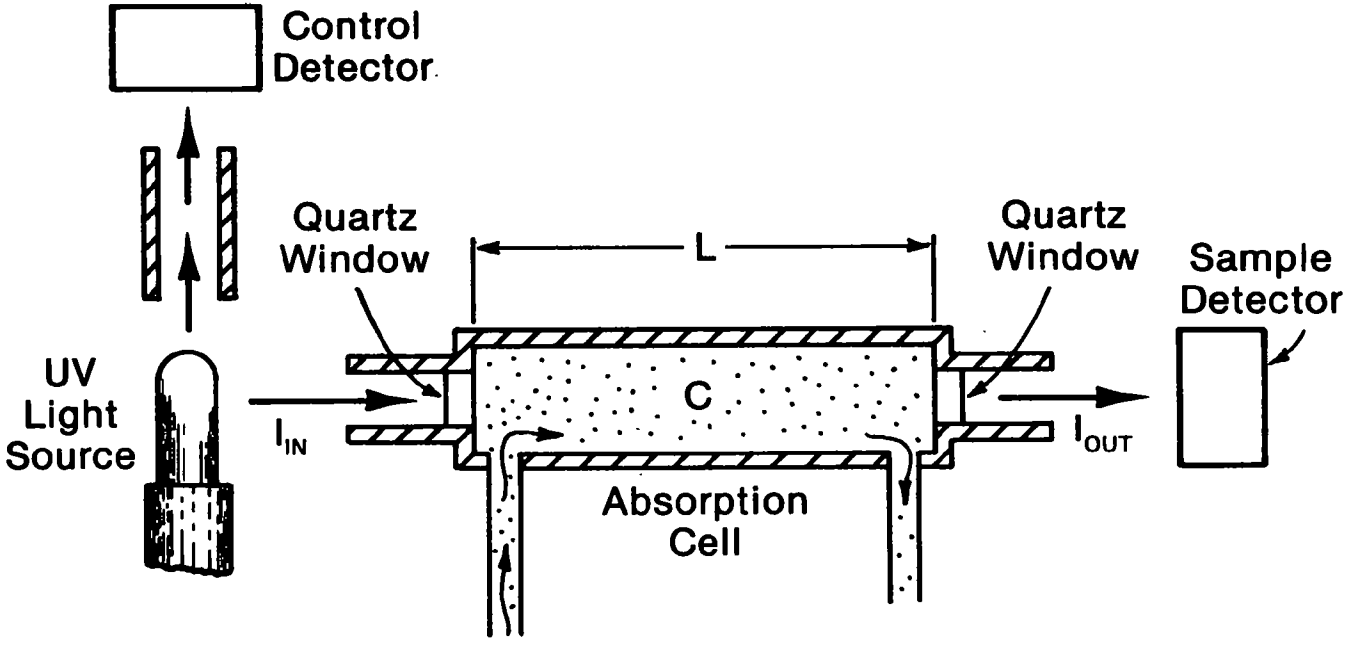

BASIC UV PHOTOMETER TECHNIQUE

ERT

CONDITIONS FOR USING UV PHOTOMETRY

1) AN AIR SAMPLE WITH A ZERO OZONE CONCENTRATION

2) AN AIR SAMPLE IDENTICAL TO THE FIRST IN ITS LIGHT ABSORBING PROPERTIES EXCEPT FOR THE UNKNOWN OZONE CONCENTRATION

3) AN UV LIGHT SOURCE OF KNOWN WAVELENGTH AND FIXED INTENSITY

4) A STABLE DETECTOR

5) A KNOWN AND FIXED PATH LENGTH

6) THE VALUE OF X, THE ABSORPTION COEFFICIENT AT THE WAVELENGTH BEING USED

7) STANDARD PRESSURE AND TEMPERATURE REFERENCE

ERT

7904139

2. THE DASIBI SYSTEM

2.1 Pneumatics

2.1.1 Sample Inlet Teflon Filter - if used

- should be changed before filter looks dirty,
- dirt in filter can reduce measured O_3, and
- dirt can restrict flow:
  - Instrument is not flow-sensitive as long as it is used in the 1 to 3.5 liter per minute (lpm) range.
  - The 1 liter limitation is to ensure proper purging of the absorption cell. The 3.5 liter limitation is to ensure 100% scrubber efficiency.

2.1.2 Scrubber - Made of copper screen mesh and coated with manganese dioxide (MnO_2) It is not consumed in removing O_3 (catalytic reduction), but dirt will reduce its efficiency. For the analyzer to give accurate readings, it has to remove all of the O_3 (100% efficiency).

2.1.3 Gas Switch - Teflon 3-way valve

2.1.4 Absorption Cell - Kynar coated. Path length is 71 centimeters (cm)

2.1.5 Pump - Capable of approximately 5 lpm at ambient pressure

2.1.6 Flowmeter - To monitor and adjust flow within operating parameters of analyzer.

2.2 Optics

2.2.1 UV source - Low pressure cold cathode mercury vapor lamp. 92% of its output is at 254 nm. It has a Vycor sheath (or second envelope) that prevents the shorter UV wavelengths from being emitted. (185 nm wavelength is optimum for generating O_3!)

2.2.2 71-cm folded absorption cell - absorption tubes have Kynar coating. Two quartz mirrors are used.

2.2.3 Detectors - Cesium telluride vacuum diodes. Their passband is centered near 254 nm. With the light source and detectors taken together, 99% of the system response is due to 254 nm light. Therefore, the system is monochromatic. The detectors are "solar blind." They will not respond to ambient light (sunlight or fluorescent).

2.3 Daisibi System: Electronics

2.3.1 Detectors

- Dark current is insignificant as used in this instrument.
- Biasing [150 nano-ampere (nA) sample detector]
  (400 nA reference detector)
- Output is direct current and proportional to light intensity

2.3.2 Electrometers - current-to-frequency converters

2.3.3 Integrators (on logic board)

- Up-down counters
- Pulse counters or totalizers
- Averages - They act as a time constant
- Allow for precise light measurement in instrument

2.3.4 Zero Detector (on logic board)

Provides an output when the count in the control integrator equals zero.

2.3.5 Auto Span Comparator (on logic board)

Provides an output when the count in the sample electrometer equals the preset span number.

2.3.6 Control and Timing Board

- Controls the solenoid valve.
- Starts and stops the sample (up count) and control (down count)

2.3.7 Memory (on logic board)

Stores the information provided by the sample integrator for display on the front panel.

2.3.8 Digital Display (on logic board)

Converts the binary coded signal in the memory to a numeric display. It is a gas-planar discharge system and requires approximately 200 VDC to operate it.

2.3.9 Digital to Analog (D/A) Converter Board

Converts the binary coded digital signal in the memory to an analog voltage (0-10 VDC).

2.3.10 Analog Output (on D/A Board)

Buffers (isolates) the D/A converter from an accidental overload or short circuit in the recorder or whatever is connected to its output.

2.3.11 Power Supply Board

Supplies +5 V, ±15 V, +24 V, and +200 V to instrument from 115 VAC. Also supplies UV lamp; 1,400 V initial, 200 to 400 V after ignition.

2.3.12 Heater Control (on Power Supply Board)

Supplies power to UV tube housing. Regulates temperature to approximately 36°C.

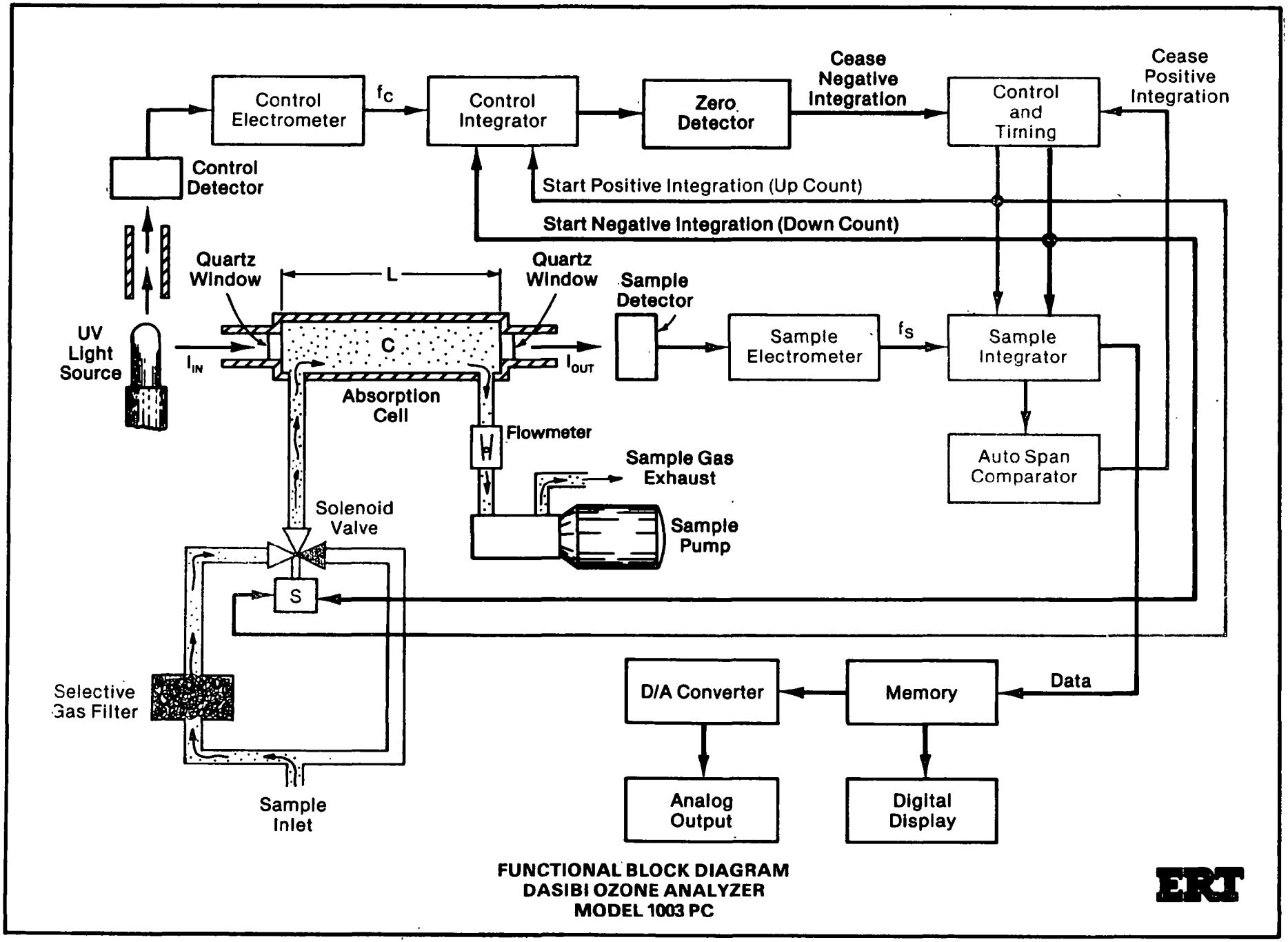

FUNCTIONAL BLOCK DIAGRAM
DASIBI OZONE ANALYZER
MODEL 1003 PC

ERT

3. THEORY OF OPERATION (Also see manual, pp. 17-21)

3.1 Sample Interval Sequence

3.1.1 4 Seconds

Purge system. Flow is through scrubber for zero O_3 in absorption tubes. Sample and control integrators reset to zero.

3.1.2 7 Seconds

Sample and control integrators start counting up. The count continues until the sample integrator reaches the preset span number and stops both counters. The control integrator now contains a number that represents the light intensity during this first half of the cycle.

3.1.3 4 Seconds

Purge system. Flow bypasses scrubber. Ozone to be measured is now in the absorption tubes.

3.1.4 7 Seconds

Sample and control integrators start counting down from the numbers stored in them on the up count. The count continues until the control integrator reaches zero. The count remaining in the sample integrator is a measure of the O_3 in the absorption tubes.

3.2 Operating Frequencies for Sample and Control Integrators

3.2.1 The display on the front panel is equal to 1/10,000 of the actual frequency when the function switch is in the sample or control frequency positions.

3.2.2 Normal operating range for the sample frequency is 35.0 to 48.0 on the display [350 kilohertz (kHz) to 480 kHz].

3.2.3 The normal operating range for the control frequency is 23.0 to 28.0 on the display (230 kHz to 280 kHz).

3.2.4 The frequencies generated are in direct proportion with the light being received at the detectors.

DASIBI 1003 SAMPLE INTERVAL SEQUENCE

4 SECONDS — PURGE SYSTEM. FLOW IS THROUGH SCRUBBER FOR ZERO OZONE IN ABSORPTION TUBES. SAMPLE AND CONTROL INTEGRATORS RESET TO ZERO.

7 SECONDS — SAMPLE AND CONTROL INTEGRATORS START COUNTING UP. THE COUNT CONTINUES UNTIL THE SAMPLE INTEGRATOR REACHES THE PRESET SPAN NUMBER AND STOPS BOTH COUNTERS. THE CONTROL INTEGRATOR NOW CONTAINS A NUMBER WHICH REPRESENTS THE LAMP INTENSITY DURING THIS FIRST HALF OF THE CYCLE.

ERT

79120228

DASIBI 1003 SAMPLE INTERVAL SEQUENCE (CONTINUED)

4 SECONDS — PURGE SYSTEM. FLOW BYPASSES SCRUBBER. OZONE TO BE MEASURED IS NOW IN THE ABSORPTION TUBES.

7 SECONDS — SAMPLE AND CONTROL INTEGRATORS START COUNTING DOWN FROM THE NUMBERS STORED IN THEM ON THE UP COUNT. THE COUNT CONTINUES UNTIL THE CONTROL INTEGRATOR REACHES ZERO. THE COUNT REMAINING IN THE SAMPLE INTEGRATOR IS A MEASURE OF THE OZONE IN THE ABSORPTION TUBES.

ERT

7902027

4. SET UP/START UP - INTITAL TURN ON

4.1 Sample connection - 1/4-inch Teflon (as short as is practical).

4.2 Connect 115 VAC / 60 Hz at 125 watts

4.3 Connect 0 - 10 VDC recorder

4.4 Check to see that all printed circuit boards are seated properly.

4.5 Turn power switch on. Display lights, pump starts, and valve cycles every 10 to 15 seconds.

4.6 Measure power supply voltages on mother board:

+5 VDC	±0.25 V
+15 VDC	±0.75 V
+24 VDC	±1.2 V
+200 VDC	±20 V

4.7 Cycle time adjust. Check cycle time by observing each time the LED in the upper left hand corner of the display flashes. It should be more than 20 seconds and less than 30 seconds. If necessary, adjust R8 on the timing circuit board.

4.8 Allow instrument to warm up for 30 minutes. Measure temperature control voltage on motherboard at the "temp" test point.

2.9 VDC ± .2 V (old style)
4.4 VDC ± .2 V (new style)

4.9 Adjust analog zero by connecting digital voltmeter (DVM) to recorder output terminals. Put mode selector switch in zero. Adjust recorder output with R3 on D/A board.

4.10 Move mode switch to Span. The first three digits of the display should agree with the first three span set switches. Connect DVM to recorder terminals. Voltage displayed on DVM should be the same as the last three digits on the analyzer display. (Example: span reading is 54.950. DVM should read 9.50 V ± .1V.)

4.11 Move mode switch to Sample Frequency. Reading should be between 35.0 and 48.0. If it is too high, adjust UV lamp. If it is too low, clean optics. If it is still too low after the optics have been cleaned, adjust the UV lamp. If the reading is too low after UV lamp has been adjusted, the lamp should be replaced.

4.12 Move mode switch to Control Frequency. Reading should be between 23.0 and 28.0. If it is either too high or too low, adjust control detector.

4.13 Move mode switch to Operate. Disconnect power to valve and sample pump. Make sure the zero offset swtich is at the zero position. Disconnect the three jumpers on the logic board.

4.14 Observe the following sequence on the display

(1) Resets to zero and pauses.

(2) Counts up to the preset span number and pauses.

(3) Counts down to some number close to .050 and pauses.

4.15 Allow the analyzer to complete several cycles. The displayed number should not change more than ±2 digits. Find the average of the cycles (e.g., .049, .047, .046, .050, .049 = .048).

4.16 Subtract .050 from the average. (e.g., .048 - .050 + - .002). This is the analyzer zero offset. In this case, it is -.002 parts per million (ppm).

4.17 Reconnect power to sample pump and valve

4.18 System Leak Check

Remove the sample line from the rear fitting and hold your finger over the fitting opening. The flow, as indicated on the rotameter, should drop to zero. If it does not, there is a leak in the system that must be closed off.

4.19 Solenoid Valve Leak Check

Remove the scrubber. Block the ell connector on the side of the solenoid where the scrubber was connected (use your finger). Watch the flowmeter and notice that the flow drops to zero for half of the measurement cycle and returns to its original flow for the other half.

Now block the tee on the other side of the solenoid where the other side of the scrubber is connected and, at the same time, block the sample inlet connector. Again, the flow should drop to zero for half of the measurement cycle and return to its original flow for the other half.

4.20 Scrubber Efficiency Check

Turn on the O_3 source and adjust it until the monitor reads between 0.5 and 1.0 ppm. The ozonator need not be stabilized for this test so there is no need to wait for the source to warm up. Once the instrument is reading O_3, switch the mode switch to SAMPLE FREQ. Record at least five consecutive readings in order to find a good average. After the last reading, switch the ozonator off, but leave the air flow on and take five more readings. Average these five readings and subtract the first average from the number just obtained. If you did not notice any drift in the frequency while you were recording the numbers, then the difference between the two averages represents how much O_3 is contained in the reference (zero) gas.

4.21 Light Absorption Check

Put instrument in OPERATE mode and remove the three jumpers on the logic board. Remove the tubing from the exit port of the absorption tubes (the top one). Prepare a small diameter wire by straightening out one end of a paper clip. Observe that the display will reset to zero, then count up to 54.950, and then count down to some number near 00.050. Wait until the up count is completed. In the pause before the down count starts, insert the paper clip into the light path through the exit port of the absorption cell. After the down count is completed, the

display should read significantly higher than before. Allow the paper clip to remain in the light path. The next complete cycle of the Dasibi will ignore the presence of the paper clip and the reading will return to 00.050. This means that the instrument has compensated for the blockage of light by the paper clip.

4.22 Zero Offset Procedure

(See SOP 008.)

Appendix E
to the Final Report

Level II Training Manual

TRAINING SCHEDULE

TRAINING SCHEDULE
LEVEL II

DAY 1	DAY 2	DAY 3	DAY 4	DAY 5
Pre Test	Calibrators	Teco 43	Bendix 8301	Dasibi 1003
Introduction to ambient air monitoring	Meloy CS-10			
Concepts of Calibration	Teco 143	Quiz	Quiz	Final Exam
	Recorders			Exam Review
	EA 401			
	Quiz			

Daily Schedule

8:00 AM — 10:00 AM — Class
10:00 AM — 10:15 AM — Break
10:15 AM — 12:00 M — Class
12:00 M — 1:00 PM — Lunch
1:00 PM — 3:00 PM — Class
3:00 PM — 3:15 PM — Break
3:15 PM — 4:00 PM — Class

7904143

PRETEST

ENVIRONMENTAL MONITORING TRAINING PROGRAM

prepared for the

PUERTO RICO ENVIRONMENTAL QUALITY BOARD

by

ENVIRONMENTAL RESEARCH & TECHNOLOGY, INC.

Project No. 7421
April 1979

LEVEL II PRE-EXAMINATION

NOTE:

* This is a thirty question test.
* You have one hour to complete this test.
* Read each question carefully. In the case of multiple-choice questions, you should choose the MOST correct answer.

NAME: _____

1. Calculate the average of the following numbers:

25
50
75
100
50

Average = _____

Questions 2-7:

Round off the following numbers to two decimal places:

2. 0.037 _____

3. 0.4124 _____

4. 2.57599 _____

5. 2.57501 _____

6. 9.3 _____

7. 0.45 _____

8. One millivolt is the same as:

A. ( ) 1000 Volts
B. ( ) 10 Volts
C. ( ) 0.01 Volts
D. ( ) 0.001 Volts
E. ( ) None of the above

9. One megohm is the same as:

A. ( ) 100 ohms
B. ( ) 10^6 ohms
C. ( ) 0.001 ohms
D. ( ) 1000 ohms
E. ( ) 10^2 ohms
F. None of the above

10. When measuring a voltage at a test point in an instrument the manual calls for a 100 ± 10 VDC. The actual reading is 112 VDC. Would you suspect a problem?

(yes or no - explain briefly)

Questions 11-13:

If you are going to check whether there is electricity at a typical wall outlet:

11. You would set your meter to the:

A. ( ) DC mode
B. ( ) AC mode
C. ( ) Electricity mode

12. You would select the following function:

A. ( ) Ohms
B. ( ) Volts
C. ( ) Amps

13. You would select the following range:

A. ( ) 0-2
B. ( ) 0-20
C. ( ) 0-200
D. ( ) 0-2000
E. ( ) None of the above

14. In handling a 10,000 ohm resistor care should be taken so as not to be shocked by the high ohms load.

A. ( ) True
B. ( ) False

15. A volt is a measure of:

A. ( ) Electrical resistance
B. ( ) Electrical pressure
C. ( ) Flow of electrons
D. ( ) None of the above

Questions 16 and 17:

Using the rotometer calibration graph provided:

16. What is the flow rate at a ball height of 4 centimeters?

_____

17. What ball height is required to provide 3.5 liters per minute flow rate?

_____

Rotameter Calibration

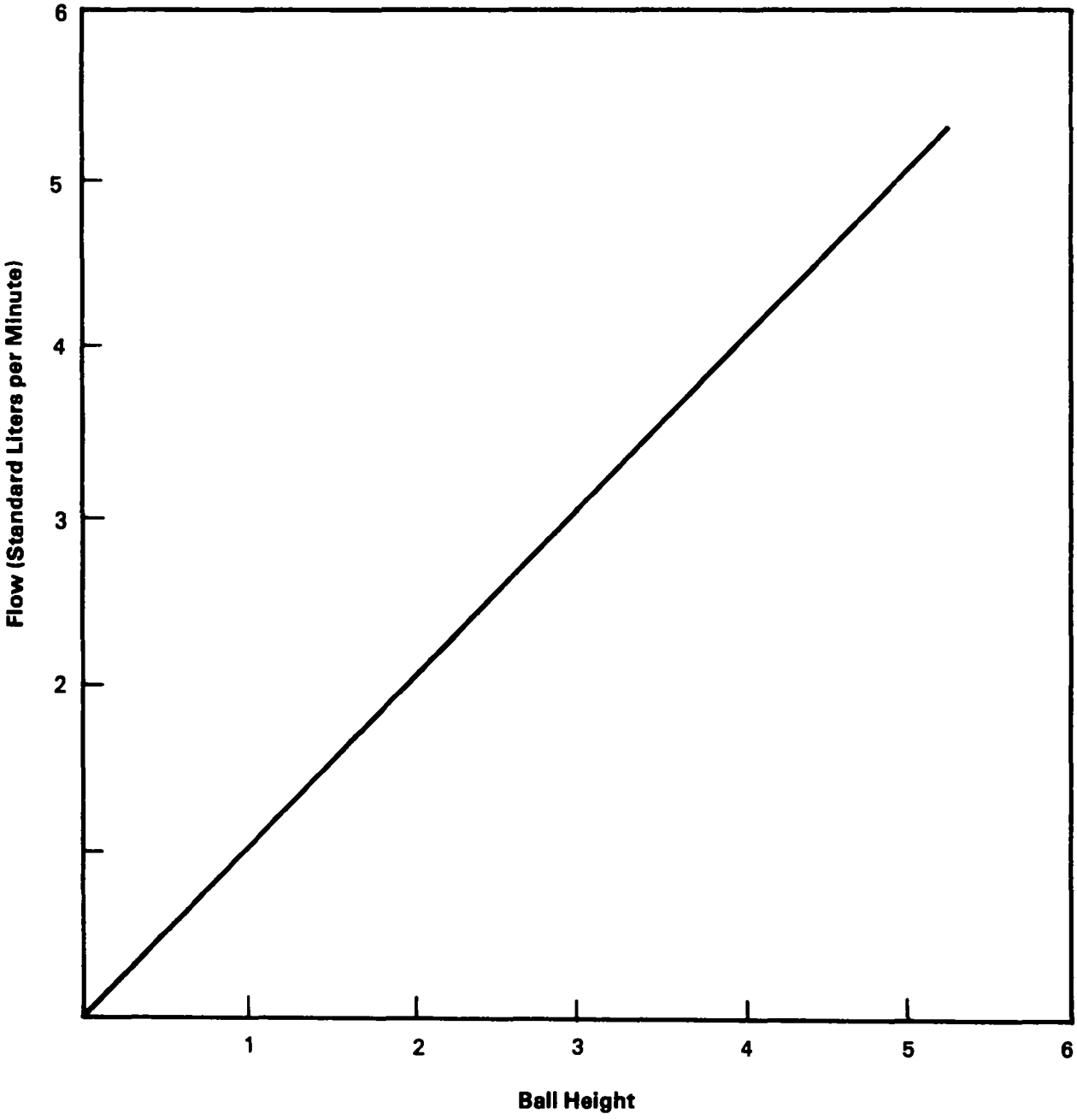

(Graph for Questions 16 and 17)

7904215

Questions 18-24:

Given that the allowable limit of variation in an analyzer's span check is 200 ± 10% - Are the values listed below within these limits?

	Observed Value	Okay?
Example:	200	yes
18.	212	_____
19.	218	_____
20.	220	_____
21.	230	_____
22.	190	_____
23.	240	_____
24.	170	_____

25. A strip chart recorder feeds paper past the pen at the rate of 2.5 cm/hr. Today you notice there are only 100 cm between the mark you made yesterday and today - Is the recorder running too slow?

A. ( ) Yes
B. ( ) No

26. If a 0-10 VDC output is equal to 0-0.500 ppm and the relationship is linear, then 2.5 VDC = _____ ppm.

27. In standard electrical practice in AC current three wire configurations (black, white, green), the black wire is usually:

A. ( ) the "hot" wire
B. ( ) the ground wire
C. ( ) the neutral wire

28. The same sample containing SO_2 is fed into three SO_2 analyzers - the three reported concentrations are:

395 ppb (parts per billion)
399 ppb
387 ppb

How would you report the average value for the SO_2 concentration?

A. ( ) 393 ppb
B. ( ) 393.6666667 ppb
C. ( ) 394 ppb
D. ( ) Any of the above values would be appropriate
E. ( ) None of the above

29. A graphical representation of the expression

$$y = mx + 6$$

would be:

A. ( ) A straight line
B. ( ) A curve
C. ( ) A circle
D. ( ) None of the above

30. Is the following statement true of false?

An arithmetic average is equal to a geometric mean.

A. ( ) True
B. ( ) False

INTRODUCTION

AMBIENT AIR MONITORING

INTRODUCTION TO AMBIENT AIR MONITORING

LEVEL II

PREPARED CLASS NOTES

INTRODUCTION

1.0 Introduction to Level II Training

An Environmental Monitoring Training Program has been developed for the Puerto Rico Environmental Quality Board by Environmental Research & Technology, Inc. (ERT) under a contract for the Environmental Protection Agency. The training program covers the following instrumentation:

- Thermo Electron Model 43 Pulsed Fluorescent SO_2 Analyzer
- Meloy Model CS-10 Permeation Tube SO_2 Calibrator
- Thermo Electron Model 143 Permeation Tube SO_2 Calibrator
- Dasibi Model 1003 PC O_3 Monitor
- Bendix Model 8501-5CA CO Analyzer
- Esterline Angus MS401 Recorders

There will be two different classroom training programs: Level 1 and Level 2. Level 1 will consist of training in all aspects of operations, maintenance, calibration, troubleshooting, and repairs for the instrumentation listed in above. Level 1 training will consist of approximately three weeks of classroom training. Personnel attending Level 1 training will be divided into two groups and two continuous three week sessions will be held. Level 2 will consist only of the operation and routine maintenance of the instruments listed above and classroom training is expected to last one week.

This binder has been prepared for the Level 2 classroom training and includes a course outline, outlines summarizing material covered, copies of overhead projection transparencies used during the training, and other reference materials. The material in this binder is intended to help students in that they will virtually not have to copy material covered and will be able to concentrate better in the presentation.

Support documents handed to students will include the necessary instrument manuals, standard operating procedures (SOPs) in conformance with the most recently applicable EPA guidelines, and testing booklets required to participate in the training program.

Personnel having completed the one week Level 2 training will be expected to be able to perform the following tasks:

1) Routine in-shelter preliminary data checks
   - preliminary evaluation of data recorded since last shelter visit including any automated zero and span checks

2) Routine instrument operational checks
   - mode and status checks

3) Routine maintenance
   - shelter checks
   - external scrubbers
   - calibration gas supply
   - filters
   - air conditioner status

4) Documentation
   - following SOP's
   - documentation of problems in log sheets
   - documentation of instrument installation, removal, and repairs made.

Because of the large amount of highly technical material associated with air quality monitoring instrumentation to be covered during the classroom training, daily and punctual attendance to the training

sessions is highly encouraged. A daily record of classroom attendance will be kept. The instructor would be hesitant to recommend a completion certificate to be issued to an individual who has attended less than 80% of the training sessions. The daily classroom sessions will be held from 8:00 to 11:30 and from 12:30 to 4:00.

Examinations or quizzes will be given regularly as shown on the schedule. They will serve as an evaluation of student performance and will point to those areas in which difficulties were encountered and the on-the-job training will be directed to helping the EQB personnel to master them. The test results will be averaged, the passing grade for receiving a certificate of training for each session being 75%. The pre-test results will not be counted for this purpose; they will only serve as a guide for the instructor.

2.0 Why Monitor Air Pollutants?

The first question that comes to mind when designing a training program in ambient air monitoring instrumentation is why do we want to measure air pollutant concentrations? The following notes attempt to give some insights to help answer that question.

2.1 Health Effects of Air Pollutants*

Scientists are convinced that air pollution is a very real contributing factor to the three major types of diseases that cause sickness and death in our society - heart disease, lung disease, and cancer. Research has shown that air pollution will accelerate the rate of disease in those persons already afflicted, and earlier death is a very real possibility.

The problem of air pollution is not limited to those persons who live in the cities or near the sources of pollution. Studies have shown that air pollution can actually be hazardous to people who live fifty or a hundred miles away from the pollution source. This is because some common pollutants are transformed, while moving through the atmosphere, by chemical reactions with sunlight into more hazardous pollutants, such as photochemical oxidants that attack our lungs and respiratory system.

Following is a description of the six major air pollutants and their effects on human health.

2.1.1 Sulfur Oxides

Approximately 95% of pollution-related sulfur oxide emissions in this country are in the form of sulfur dioxide, a by-product of combustion of fossil fuels such as oil and coal. The remaining 5% are in the form of a variety of sulfur compounds that eventually are transformed into sulfuric acid, another pollutant.

Coal or oil-burning power plants produce most of the sulfur dioxide emissions, while autos account for only about 1%. Sulfur dioxide oxidizes in the atmosphere to form sulfates, a particulate

---

*Adapted from "Health Effects of Air Pollutants", U.S. Environmental Protection Agency, June 1976.

form of sulfur, the effects of which depend on particle size, dispersion by weather conditions, and the presence of other pollutants which may magnify the effects.

The levels of sulfates in the air often exceed those levels where adverse human effects begin to appear. Sulfate concentrations greater than 9 or 10 micrograms per cubic meter of air will aggravate asthma, lung and heart disease, and the lung function in children.

The effect of sulfur dioxide is magnified by the presence of other pollutants such as photochemical oxidants and by-products such as sulfuric acid and hydrogen sulfide. The combination of these is known to affect the respiratory tract.

Many scientists also believe this exposure to sulfates may be cumulative, causing or increasing the likelihood of respiratory illness such as bronchitis, emphysema, and asthma. Studies show that children exposed to continuous high SO_2 concentrations are more likely to develop respiratory illness when high concentrations of particulates are present.

2.1.2 Particulate Matter

Total suspended particulates (TSP) is a term for the measurement of all particles in our air, including soot, mists, and sprays. TSP includes a wide range of non-toxic materials such as dust and dirt, and many other materials that we know or suspect to be toxic, such as beryllium, lead, asbestos, certain hydrocarbons which may be carcinogenic, suspended sulfates and nitrates, and possibly, radioactive elements.

The amount of toxic materials in our air will vary geographically, depending on the man-made and natural sources in a particular area. To date, few studies have been conducted on the health effects of individual particles because of the wide range of differences in the makeup of particulate concentrations. Particulate matter is studied for the most part as a single contaminant, and most studies relate particulate concentrations to death, respiratory illness, and breathing problems in urban industrial areas where energy supplied by fossil fuel consumption is a major concern.

The effects of particulate air pollution on health are related to injury to the surfaces of the respiratory system, that is, to the linings of the lungs and throat. Such injury may be temporary or permanent. It may be confined to the surface. However, by weakening resistance to infection, such pollutants may affect the entire body adversely. Chemicals carried into the lungs by particulates, for example, may cause cancer to develop on the lung lining, which then may spread throughout the body and prove fatal. Inhaled lead particulates may cause lead poisoning - manifested by nervous and blood symptoms - while causing very little damage to the lung itself.

In studies of air pollution in London and New York City, a rise in the number of deaths has been recorded when both smoke and sulfur oxides levels were high. Studies in Buffalo and Nashville also showed increased death rates, particularly among older persons, where combined pollution from particulates and sulfur oxides were recorded. Eye irritation from dust particles also can be a problem in many areas.

2.1.3 Carbon Monoxide

Carbon monoxide (CO) is a colorless, odorless, tasteless gas commonly found in our urban atmosphere in concentrations that can be harmful to people. It is a by-product of combustion, and the greatest single source of this pollutant is the automobile.

Carbon monoxide is inhaled through the lungs and enters the blood stream by combining with hemoglobin, the substance that normally carries oxygen to the cells. CO combines with hemoglobin much more readily than oxygen does. The result is that the amount of oxygen getting to the tissues is drastically reduced in the presence of CO, and this can have a profound effect on our health. CO also impairs heart function by weakening the contractions of the heart which supply blood to the various parts of the body. The effect of this on a healthy person is to reduce significantly his ability to perform exercise, but in a patient with heart disease, who is unable to compensate for the decrease in oxygen, it can be a lift-threatening situation. A person who has a heart attack in the presence of heavy carbon monoxide air pollution is more likely to die than if the attack had occurred in

clean air. And carbon monoxide is also harmful to persons who have lung disease, anemia, or cerebral-vascular disease.

Carbon monoxide can also affect mental function at relatively low concentrations. Visual perception and alertness can be affected.

2.1.4 Photochemical Oxidants

Photochemical oxidants are not emitted directly into the atmosphere but are produced by a complex series of chemical reactions initiated when certain emissions by autos and other sources - hydrocarbons and oxides of nitrogen - are exposed to sunlight. Ozone, peroxyacyl nitrate (PAN), formaldehyde, acrolein, nitrogen peroxide, and organic peroxides are all formed in this manner. The presence of these pollutants in the atmosphere is dependent on sunlight, so after nightfall their concentrations are very low.

This type of pollution first gained attention in the 1940s as the main cause of smog in Los Angeles. Since that time photochemical smog has become common in many cities.

Photochemical oxidants are responsible for a number of health effects in humans. They can affect the lungs and eyes. They may cause respiratory irritation and even changes in lung function. They may result in eye irritation with the familiar symptoms of tears and inflammation. At certain concentrations they have been shown to impair the performance of athletes, and to affect persons with asthma.

Ozone, the main constituent of photochemical smog, is a severe irritant to all mucous membranes, and its main health effects are on the respiratory system. It is virtually intolerable at levels of 1 part per million. At considerably lower concentrations (0.1 to 0.2 ppm) which often occur in the air of many American cities, ozone in conjunction with other photochemical oxidants causes a variety of health effects which are aggravated by exercise. Ozone also has an increased effect on respiratory function in the presence of sulfur dioxide.

2.1.5 Nitrogen Oxides

Oxides of nitrogen usually originate in high-temperature combustion processes, and to a lesser extent in chemical plants.

Although measurement of this pollutant in the atmosphere is difficult, experience has shown that in various forms, oxides of nitrogen can affect humans as well as materials and vegetation.

Based on occupational exposures to nitrogen dioxide by firemen, welders, silo fillers, miners, chemists, and other industrial workers, we know that at high concentrations this pollutant can be fatal to humans. At lower levels of 25 to 100 parts per million, it can cause acute bronchitis and pneumonia.

The group of pollutants known as nitrogen oxides also can affect lung tissue and lower the resistance of laboratory test animals to influenza. Scientists suspect the same effect may occur in humans. In one study of schoolchildren living near an industrial plant producing nitrogen dioxide, an increase in respiratory disease was noted.

Oxides of nitrogen also can react with hydrocarbons, in the presence of sunlight, to form photochemical oxidants which, as noted previously, can affect human lungs and eyes as well as cause respiratory irritation.

2.1.6 Hydrocarbons

Motor vehicles are the chief source of hydrocarbon emissions, with the remainder coming from evaporation of industrial solvents in painting, dry cleaning, and so on, and from gasoline marketing and incineration.

No adverse effects on human health are directly attributed to hydrocarbons. However, this pollutant does react under sunlight, as indicated previously, to form photochemical oxidants which do affect people, causing respiratory irritation and the stinging, watery eye reaction associated with urban smog.

2.2 Air Pollution Related Legislation

In view of the health effects of air pollutants, and in order to protect the public from increasing pollutant levels in the Nation, in 1967 the Congress wrote the Clean Air Act to address those effects. Table 1 summarizes the federal air pollution acts.

TABLE 1

SUMMARY OF FEDERAL AIR POLLUTION ACTS

Year Enacted	Title	Purpose
1955	Air Pollution Control Act	First federal legislation.
1963	Clean Air Act	Federal financial assistance but problem left to the states.
1965	Amended Clean Air Act	First federal emission standards for cars.
1967	Air Quality Act	First Air Quality Criteria Reports, first requirement for ambient standards, but these to be set by the states.
1970	Amended Air Quality Act	First national ambient standards and these to be set by federal action; first national emission standards to be set for certain pollutants; first standards of performance for new plants; continued state implementation.
1978	Clean Air Act Amendments	Prevention of significant deterioration in areas meeting standards was fully addressed; continued state implementation.

Prompted by widespread public support, Congress in 1970 enacted the landmark Clean Air Amendments, now usually called simply the Clean Air Act, a law which continues to be of major importance in protecting public health and welfare from air pollution.

It gave the U.S. Environmental Protection Agency (EPA) responsibility for setting and enforcing standards on various types of air pollutants suspected of having an impact on public health and welfare. The Agency subsequently set air quality standards for six common classes of pollutants: sulfur oxides, particulate matter, carbon monoxide, photochemical oxidants, nitrogen oxides, and hydrocarbons.

These standards are known as the National Ambient Air Quality Standards (NAAQS for short). There are primary and secondary standards. The primary standards are health-effect related and are thus stricter. Secondary standards are related to economic losses caused by pollutant concentrations at or above those standards.

In general, day-to-day enforcement of the Clean Air Act is left up to the states. The states, in turn, sometimes delegate authority to individual cities or air basins. In cases where an air basin crosses state lines (New York City's, for instance, includes parts of New Jersey and Connecticut) states and local jurisdictions maintain authority only over sources within their boundaries.

The states are responsible for formulating control strategies and formalizing them into documents called State Implementation Plans (SIPs). In Puerto Rico, the SIP is called Clean Air for Puerto Rico. The SIPs include regulations that limit allowable pollutant emissions into the atmosphere.

The states' implementation plans set restrictions on the sources of air pollution within their boundaries so that federally set ambient air standards can be met. In addition, state and local governments must monitor air quality. The higher the population density, the more sophisticated the monitoring must be. Ambient air standards for six major air pollutants (sulfur oxides, nitrogen oxides, particulate matter, carbon dioxide, hydrocarbons, and oxidants) were published April 30, 1971.

The permissible emission limits listed in federal and state air pollution regulations are meaningless without knowing how those limits are determined. In other words, one must know how emissions are measured before the amount of pollution released can be defined. Thus, test procedures are also provided in the regulations. It should be noted that these vary from state to state, and even from source to source, depending on when the facility was built. In addition, plant operators may be able to substitute an easier test for a more difficult one.

Ambient Monitoring

At minimum, state air pollution control agencies must monitor atmospheric concentrations of suspended particulates, and sulfur dioxide. In high-population areas, they must also monitor carbon monoxide, photochemical oxidants and nitrogen dioxide to assure that federal ambient air standards are not exceeded. EPA has published guidelines and regulations for the location of ambient air monitoring stations as well as overall network design. Under certain conditions, it may be worthwhile for a company to monitor ambient air near its plant as well, although this is not required by law. Such records could, for instance, be handy in defending oneself from suits by neighbors. In addition, local officials can order production curtailed when pollutants reach levels immediately dangerous to health. Plants in areas where such pollution alerts are common may find such monitoring useful to gain time for an orderly shutdown before officials actually issue the order. This is especially easy for particulate matter, which can be easily measured with simple, rugged tape samplers and high-volume samplers.

The low ambient pollutant levels mandated by EPA, however, impose tough requirements for other instrumentation - especially measuring devices for sulfur dioxide, carbon monoxide, nitrogen oxides and photochemical oxidants. Equipment must be able to measure the pollutant with only minimal "interference." That is, it must not mistake one pollutant for another. Instruments must also be able to react quickly to changing pollutant concentrations, yet be easy to keep calibrated. EPA specifications for ambient air monitoring equipment were first published on August 14, 1971.

3.0 National Air Ambient Quality Standards

Pollutant	Primary Standard (yearly average)	Secondary Standard (yearly average)
SO_2	0.02 ppm	0.03 ppm
TSP	60 $\mu g/m^3$	75 $\mu g/m^3$)
CO	9 ppm (1 hr)	9 ppm (1 hr)
Oxidants	0.08 ppm	0.08 ppm
NO	0.05 ppm	0.05 ppm
HC	0.24 ppm	0.24 ppm

4.0 Measuring Air Pollutants

Typically, the measurement of particulates has been done by mechanical means; that is, an air sample is filtered through a pre-weighed filter and the weight increase is noted while the sample's volume is determined. This method is referred to as High-Vol sampling because a fairly large amount of air is filtered for one sample.

For measuring gaseous air pollutants, the "first-generation" analyzers relied on "wet chemistry". An air sample was bubbled through a series of reagents sensitive to the pollutant being measured. The concentration was determined by titration of the reagents. The process was usually lengthy, time consuming and could not provide continuous "real-time" data.

A second generation of analyzers has in recent years gained acceptance, because they are more reliable, easier to operate, and able to operate continuously. These instruments rely on the specific pollutants having characteristic light absorption or emission spectra that can be measured. Some of the measurement methods are formally known as flame photometry, pulsed fluorescence, infrared light absorption, and ultra-violet light absorption. It is on instruments that utilize those techniques that this course will focus on.

5.0 The Need for Standardization

Since there are more than fifty state agencies (50 states, Puerto Rico, and the Virgin Islands) operating air quality monitoring instrumentation, some measures had to be taken to standardize the procedures to insure uniformity in determining compliance with the NAAQS.

According to Federal Regulations, air monitoring equipment used for determining compliance with NAAQS or for Prevention of Significant Deterioration (PSD) monitoring, the Reference method or Equivalent Analyzers must be used.

The "Reference Method" is the analytical method or analyzer used to determine compliance with NAAQS and is certified by EPA as such.

"Equivalent" analyzers are analyzers that have met criteria set by EPA and may be used in lieu of Reference Methods.

In order to insure continuous monitors are working properly, they must be calibrated frequently as mandated by Federal Regulations. In a calibration, the analyzer is challenged with a known concentration of the pollutant measured [usually traceable to the National Bureau of Standards (NBS)], the response is noted, and if necessary is adjusted to within specified tolerances.

Independent audits must also be performed as required to insure compliance with regulatory requirements.

This course will point out proper calibration procedures, as well as routine checks, to insure proper operation of instrumentation.

PERMEATION TUBE

SO_2 CALIBRATORS

PERMEATION TUBE SO_2 CALIBRATORS
PREPARED CLASS NOTES

Part I Introduction

Part II Thermo Electron Model 143

Part III Meloy Model CS-10

1. INTRODUCTION

1.1 The quality assurance requirements for State and Local Air Monitoring Stations (SLAMS) and Prevention of Significant Deterioration (PSD) air monitoring mandate that continuous SO_2 analyzers be periodically zeroed, span checked, calibrated, and audited.

The use of permeation tubes to generate calibration SO_2 gas mixtures is widely used. The National Bureau of Standards (NBS) has developed and made available SO_2 permeation tubes. These are regarded as Standard Reference Materials (SRM's) and are considered primary standards.

SO_2 permeation tubes consist of FEP Teflon tubing that contain liquified SO_2, hermetically sealed under its own pressure. These tubes are plugged with a section of Teflon rod, charged with liquefied SO_2, and sealed. Collars of inert metal are used to reinforce the end seals.[1]

The sealed gas permeates through the tube's walls and evaporates from the outer surface at a constant rate if the tube is held at a constant temperature. The process is highly temperature sensitive; therefore the temperature must be controlled with $\pm 0.1°C$.[1] Known concentrations of SO_2 may be prepared by passing a known flow of clean dry air over the permeation device.

---

[1] F. P. Scarignelli, A. E. O'Keefe, E. Rosenberg, J. P. Bell, Analytical Chemistry, Vol 42, No. 8, July 1970.

2. PERMEATION TUBE CALIBRATORS

2.1 Objective:

- The objective is to produce a gaseous sample with a known concentration of SO_2. The concentration should be within the range of whatever SO_2 analyzer that is to be calibrated/audited and should also meet minimum flow requirement of the analyzer.
- Since the permeation device gives off SO_2 at a constant rate, the SO_2 can be diluted in a calibrated clean, dry flow of air to produce the required concentrations:

$$C = \frac{R\ K}{Q_o}$$

where

C = SO_2 concentration in ppm (vol)

R = certified permeation rate in ng/min

K = 0.382 ppm SO_2 (from diluting 1ng SO_2 in one liter of air)
(K = constant for specific permeant)

Q_o = flow rate of gas, mℓ/min

2.2 Requirements:

- Permeation tube, NBS calibrated with permeation rate specified in ng/min at a given temperature.
- Calibrator should have permeation oven that can be kept at specified temperature ±0.1°C. This requires the following electronics:
  a. Control circuit - heater
  b. Feedback circuit
- Calibrator should have provision for scrubbing utilized air so that it is free of particulates, SO_2, and humidity.

- Calibrator should have calibrated flow metering and control pneumatics.

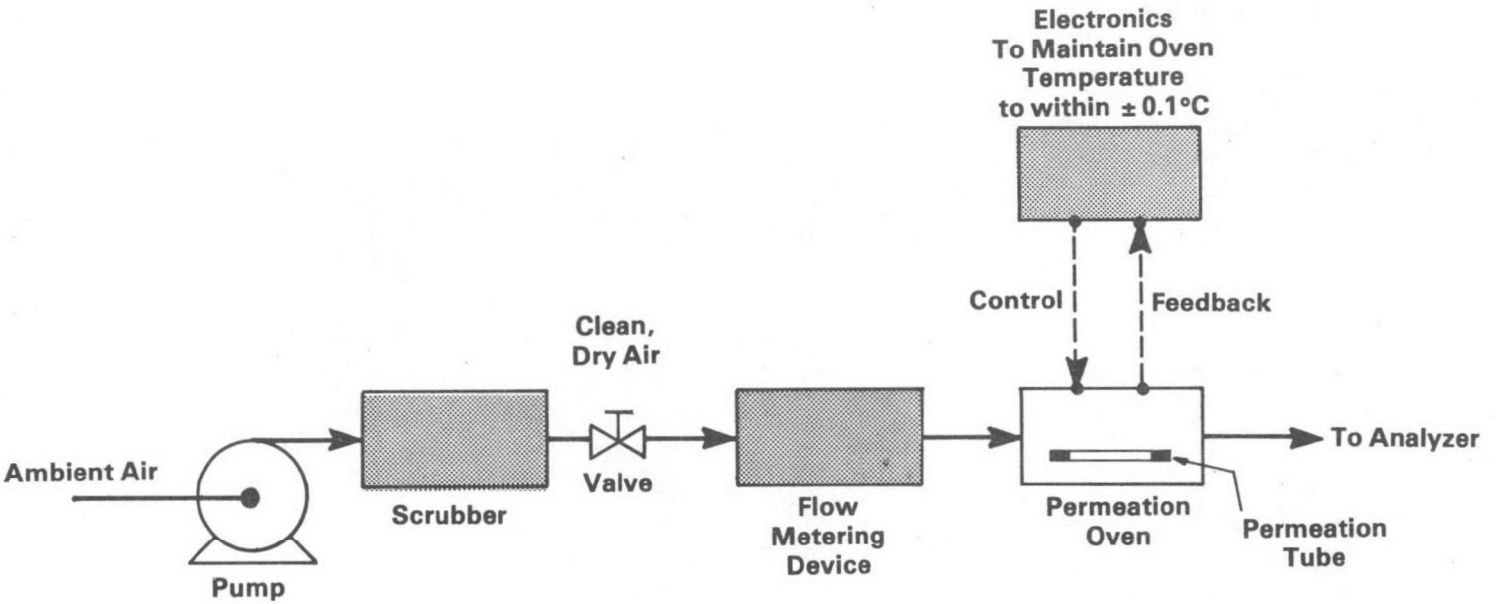

CONCEPTUAL PERMEATION TUBE CALIBRATOR

ERT

ERT

FLOW RATE CALIBRATION BY MASS FLOW METER

Date: _____ Technician: _____

Instrument: Type: _____ Model: _____
Mfg: _____ Range: _____
SN: _____

Standard: Mfg: _____ Model: _____
SN: _____ Range: _____

Calibration Gas: _____

Mass Flowmeter		Instrument	
Voltage, V_{DC}	Flow Rate, /min	Ball Height (cm) Steel	Ball Height (cm) Gloss
		15	
		14	
		13	
		11	
		9	
		8	
		7	
		5	
		4	

1814 (4/79)

Instrument Model Mfg _____ SN _____ EQB SN _____

Rotometer Calibration (Range) Date

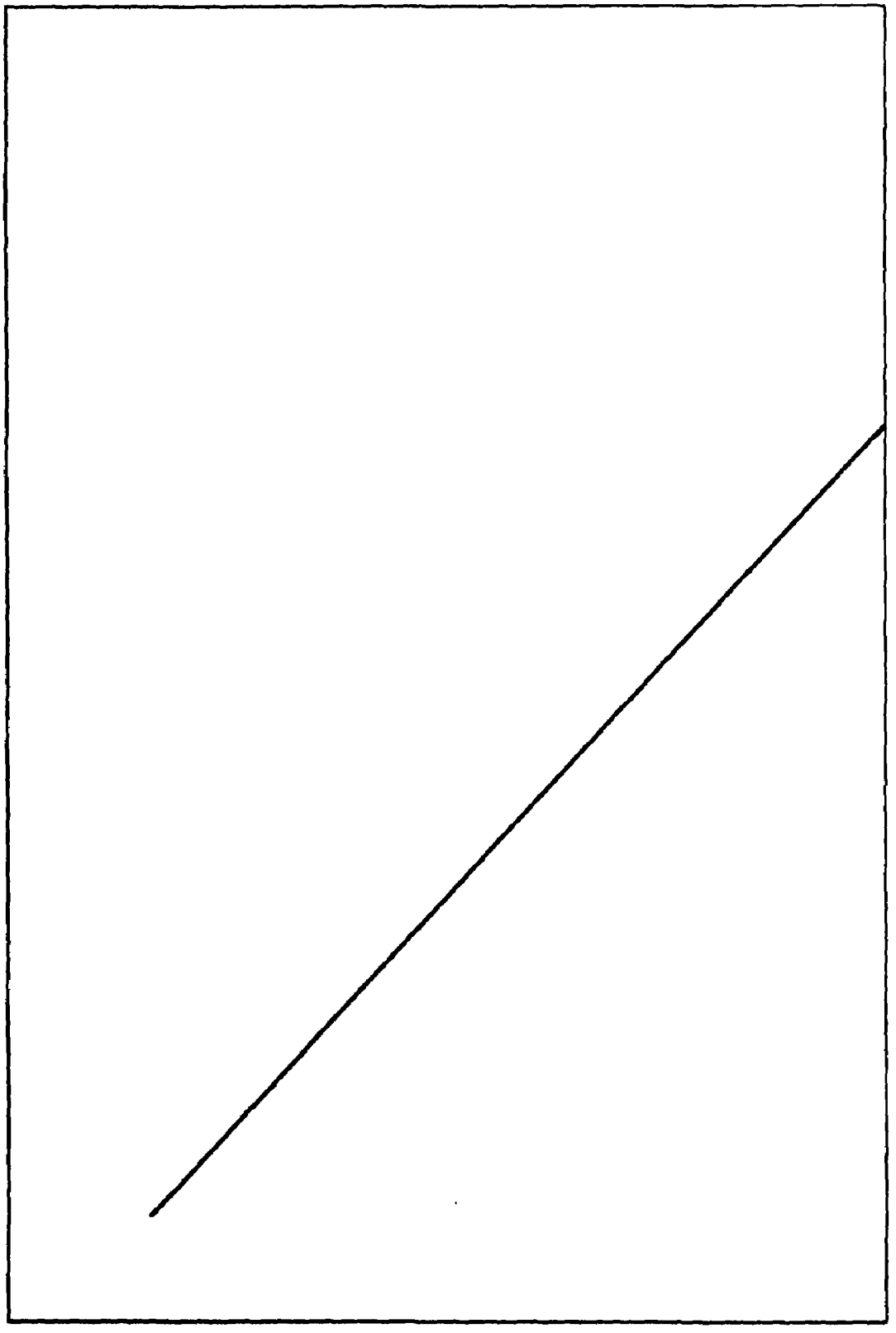

ERT

DETERMINATION OF SO_2 CONCENTRATION (CALIBRATOR OUTPUT)

$$C = \frac{RK}{Q_o}$$

C = SO_2 CONCENTRATION IN PPM (VOLUME)

R = PERMEATION RATE IN NG/MIN (AT SPECIFIED TEMPERATURE ± 0.1°C)

K = 0.382 ppm SO_2 - m ℓ /ng SO_2 (K = CONSTANT FOR SPECIFIC PERMEANT)

Q = FLOW RATE OF GAS IN m ℓ /MIN

ERT

Instrument _____ Model _____ SN _____ EQB SN _____

Permeation Tube SN _____ Date

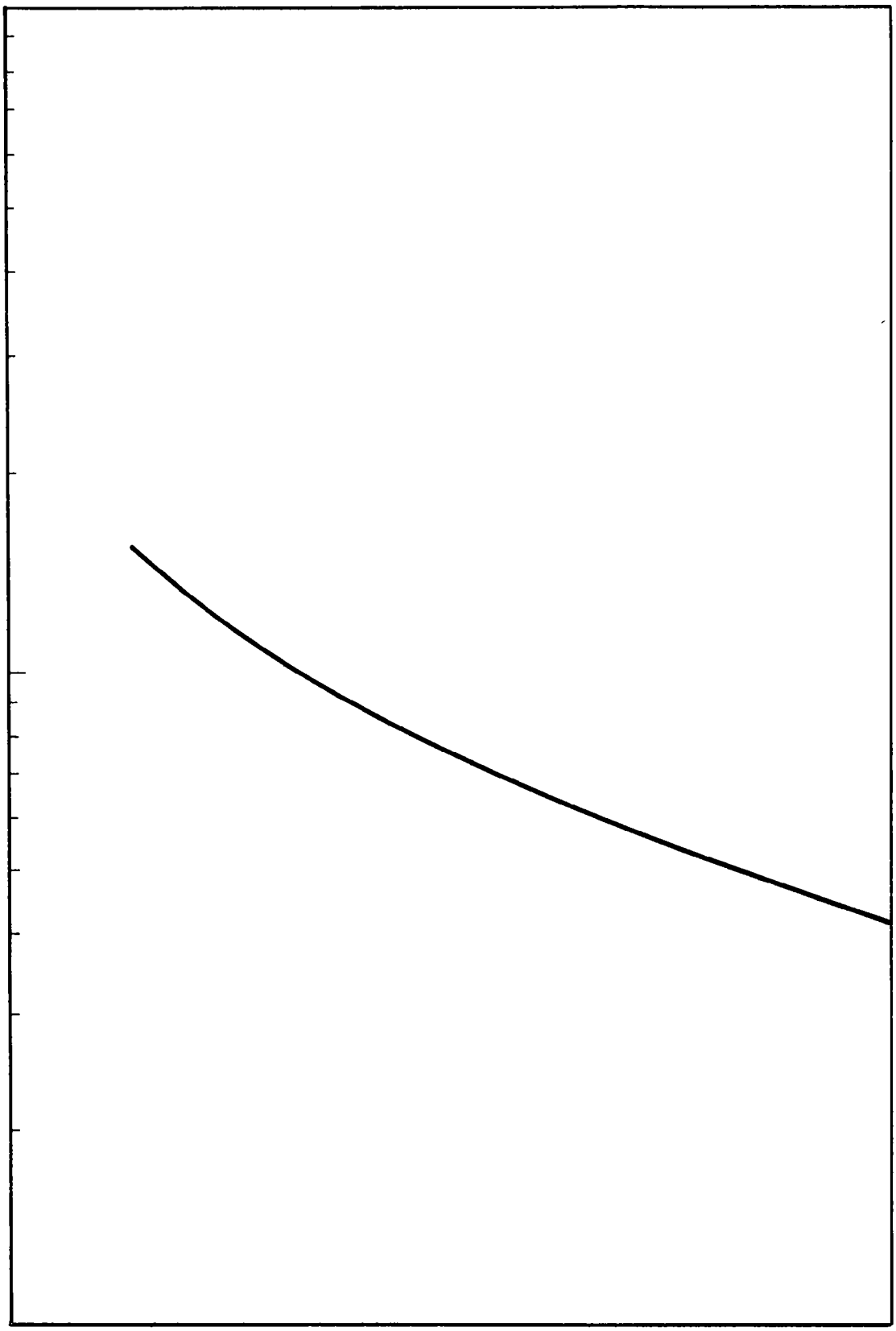

ERT

3. THE THERMO ELECTRON MODEL 143 PERMEATION TUBE CALIBRATOR

(See the following attachments)

STANDARD OPERATING PROCEDURE

Title:

Date: 3/1/79
Number: 014
Revision: 0

EQB Laboratory Overhaul and Calibration of the
Teco 143 Multipoint Permeation Tube
SO_2 Calibrator

Prepared by ERT for the Puerto Rico
Environmental Quality Board Under
Contract No. 68-02-2542

STANDARD OPERATING PROCEDURE

Date: 3/1/79

Title: EQB Laboratory Overhaul and Calibration of the Teco 143 Multipoint Permeation Tube SO_2 Calibrator

Number: 014

Revision: 0

1.0 Applicability

This SOP applies to the laboratory overhaul, checkout, and calibration of the TECO 143 Multipoint Permeation Tube Calibrators used in the EQB network for calibrating SO_2 analyzers.

2.0 Supporting Materials

Digital Multimeter (Fluke 8000 or equivalent).
Thermistor or thermometer calibrated to 35°C ± 0.1°C (NBS traceable).
Leak Checker.
Mass flow meter (Hastings or equivalent) range 0 to 15 ℓ/min (NBS traceable).
Teco 143 manual.
Pressure gauge.

3.0 Preliminary checks, and pneumatic overhaul - refer to and fill out forms 14A.

3.1 Visual Check

3.1.1 Check all lines are properly connected.

3.1.2 Verify capillary is installed and clean (1 1/4" x0.10) black, long.

3.1.3 Verify power switch and lamp operate.

3.1.4 Verify solenoid valve operation (audible).

3.1.5 Verify fan operation.

3.1.6 Check for any visual damage.

3.2 Penumatic system overhaul

3.2.1 Replace any discolored or otherwise damaged or suspect lines (FEP teflon).

3.2.2 Replace or overhaul pump on a yearly basis.

3.2.3 Adjust pump pressure deadhead to 10 psi via the relief pressure regulator mounted on the pump.

3.2.4 Replace the charcoal in scrubber and particulate filter.

3.2.5 Leak test the system - see note on instrument inspection and overhaul report form.

3.2.6 Verify the solenoid valve operation as indicated on item 4 of the enclosed form.

STANDARD OPERATING PROCEDURE

Date: 3/1/79
Number: 014
Revision: 0

Title: EQB Laboratory Overhaul and Calibration of the Teco 143 Multipoint Permeation Tube SO_2 Calibrator

4.0 Rotameter Calibration

4.1 Insure that the system is leak free.

4.2 Block vent branch of outlet tee and connect the other branch to a mass flow meter having a current calibration seal.

4.3 Read and record flow in liters per minute (ℓ/min) for a minimum of 9 ball heights between 2 and 14.5 centimeters. (This is done for both the steel and glass balls. Read the top of the ball. Use the attached form. (Form 014B)

4.4 Using arithmetic graph paper, plot ball height (in centimeters) versus measured flow (in ℓ/min for each ball).

4.5 Connect the plotted points with a straight line, if linear, or a smooth curve, if not linear (for each ball).

5.0 Electronics Adjustment

5.1 Verify power supply to board-top of R1 to ground is 13VDC, if not adjust with P1.

5.2 Turn unit on and allow it to warm up for 30 minutes.

5.3 Verify the oven temperature is at 35°C ± 0.1°C with a calibrated thermistor or thermometer, if not adjust with P-4.

5.4 Adjust meter indication with P2 and P3.

5.5 With a DMM determine the resistance of the metering circuit thermistor when the oven is set at the proper temperature and place a sticker indicating this value on the oven housing.

6.0 Determination of output SO_2 concentration

6.1 Install an NBS certified 5 cm SO_2 permeation tube in the oven.

6.2 From the certification documentation determine the permeation rate (μg/min).

6.3 Using the certified permeation rate, calculate and record the expected output of the calibrator for each ball height measured in step 4.3, using the following equation:

$$\text{Calibrator Output Concentration (ppm)} = \frac{\text{Ave Perm rate } (\mu g/min) \times .382 \left(\frac{ppm\ell}{\mu g}\right)}{\text{Calibrator flow @ each ball height } (m\ell/min)}$$

Using all the output concentrations derived above, on semilog graph paper plot output concentrations in ppm on the log scale versus ball height in centimeters on the arithmetic scale.

STANDARD OPERATING PROCEDURE

Title: EQB Laboratory Overhaul and Calibration of the Teco 143 Multipoint Permeation Tube SO_2 Calibrator

Date: 3/1/79
Number: 014
Revision: 0

Using a french curve or a flex curve, draw a continuous curve representative of the plotted points.

6.4 Using the curves derived in Section 6.3 determine the ball heights that would produce the following concentrations:

0.05 ppm
0.10 ppm
0.20 ppm
0.30 ppm
0.45 ppm

and record the information on a calibration card noting the tube serial number, date installed, and whether the ball height used for obtaining above concentrations is the steel or the glass one.

INSTRUMENT INSPECTION AND OVERHAUL REPORT

Manufacturer - Thermo Electron

Instrument - Model 143 SO_2 Permeation Calibrator Date: _____

Serial No. - _____ Inspector: _____

EQB No. - _____

(Yes or No)
(Unless Noted)

1. Visual Check:
   - All lines connected _____
   - Capillary installed _____ (1 1/4" x .010) Black, Long
   - Power switch and lamp operate _____
   - Solenoid valve operates (Audible) _____
   - Panel meter lamp indicates proper Temperature (after 15 min. warmup) _____
   - Fan operating _____
   - Any visual damage _____
   - Other _____

2. Replace charcoal scrubber and particulate filter _____

3. Pump Pressure Check (Deadhead) _____ PSI
   - Adjusted to 10 PSI
   - Gas Leak at permeation oven cap (snoop on cap) _____ w/o pressure
   - Gas Leak at permeation oven cap (snoop on cap) _____ w pressure*

4. Output of Z_1 13.0 VDC (Top of R_1 to gnd.) _____
   - Adjusted with P_1 _____
   - Oven thermister resistance (with traceable lab. thermister _____KOHM
   - Readjust oven temp. with P4 _____
   - Reset meter P3 _____
   - 30°C oven _____ 35°C oven _____

5. Solenoid valve operation** (zero-span) _____

*To pressure system: Increase flow to maximum and block output and vent ports. Balls should drop to zero (some bounce will be noted), DO NOT PRESSURE for longer than ONE minute.

**A Rotometer or massflowmeter may be placed on the output of the solenoid bypass charcoal scrubber. The Flow should be approx. 150-180 cc/min. with the flow mode switch in the Zero position and Zero in the Span position.

ERT

FLOW RATE CALIBRATION BY MASS FLOW METER

Date: _____ Technician: _____

Instrument: Type: _____ Model: _____
Mfg: _____ Range: _____
SN: _____

Standard: Mfg: _____ Model: _____
SN: _____ Range: _____

Calibration Gas: _____

Mass Flowmeter		Instrument	
Voltage, V_{DC}	Flow Rate, /min	Ball Height (cm) Steel	Ball Height (cm) Gloss
		15	
		14	
		13	
		11	
		9	
		8	
		7	
		5	
		4	

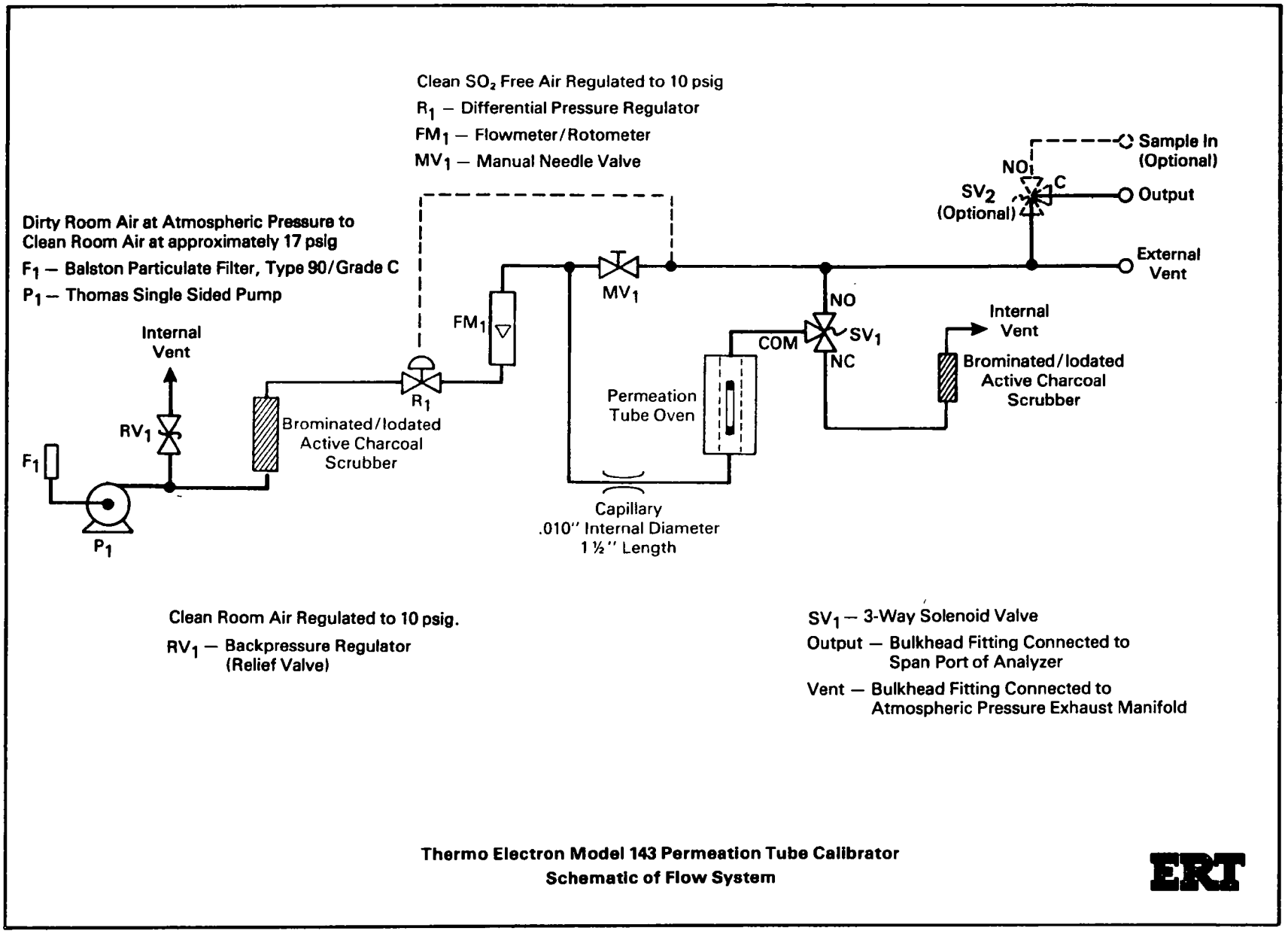

Thermo Electron Model 143 Permeation Tube Calibrator
Schematic of Flow System

ERT

4. THE MELOY CS-10 MULTIPOINT SO_2 CALIBRATOR

(See the following attachments)

STANDARD OPERATING PROCEDURE

Title:

Date: 3/1/79
Number: 009
Revision: 0

Routine Field Operation of the
Meloy CS-10 SO_2 Calibrator

Prepared by ERT for the Puerto Rico
Environmental Quality Board under
Contract No. 68-02-2542

STANDARD OPERATING PROCEDURE

Title: Routine Field Operation of the Meloy CS-10 SO_2 Calibrator

Date: 3/1/79
Number: 009
Revision: 0

1.0 Applicability

This procedure is to be used as a supplement to SOP's 001-006 EQB Field Routine Visit, and 2000-224 Multipoint Span Check/Field Calibration: Teco 43 SO_2 Analyzer at those sites where the Meloy CS-10 is used as the in-station calibrator for the Teco Model 43 Pulsed Fluorescence SO_2 Analyzer.

2.0 Checks to be performed every site visit: Verify that ball height is at designated value. Verify that cooling fan and pump are operating and check if temperature control pilot lamp is flashing, indicating oven is at proper temperature. (Note nonflashing lamp may be due to defective lamp and not to improper oven temperature - replace lamp to verify this case.)

3.0 Maintenance. The calibrator will be overhauled and calibrated every six months according to SOP 013.

4.0 The Divisional Quality Assurance Officer will conduct audits of this procedure. Corrective action will be taken as necessary.

Meloy CS-10 SO_2 Calibration Source Flow Diagram

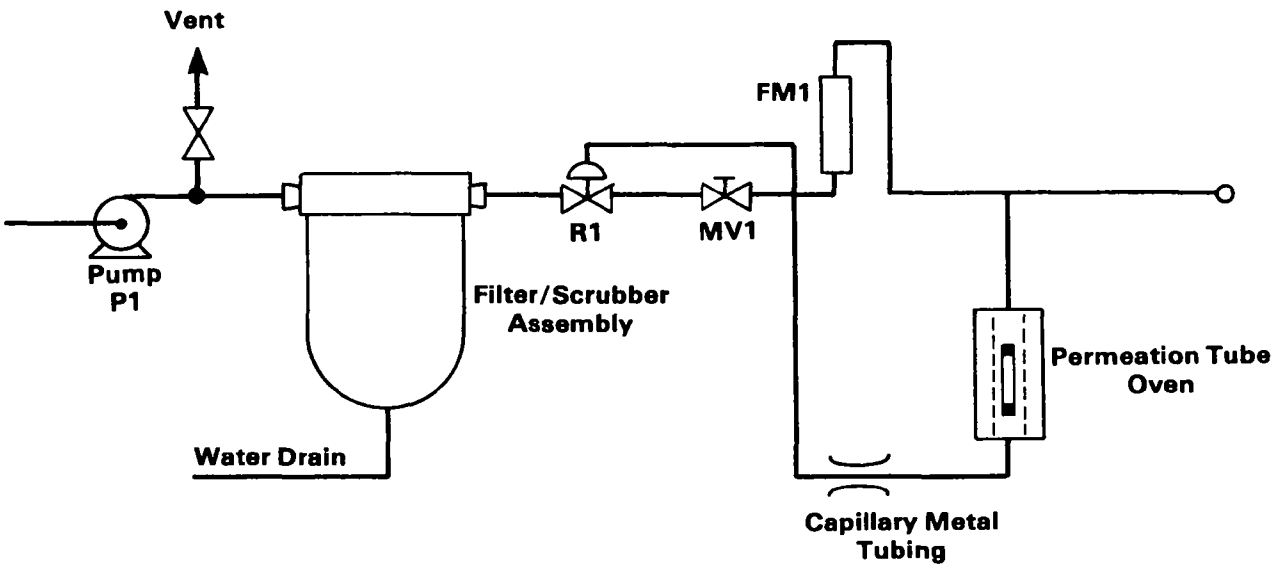

P_1	Thomas Single Sided Pump
R_1	Differential Pressure Regulator
MV1	Manual Needle Valve
FM1	Flowmeter/Rotometer

ERT

TECO SO_2 ANALYZER

MODEL 43

THERMO ELECTRON MODEL 43
PULSED FLUORESCENT SO_2 ANALYZER

Prepared Class Notes

1. INTRODUCTION

1.1 Sulfur dioxide, which is one of the products of combustion of most organic fuels, is generally considered to be one of the largest pollutants discharged into the atmosphere by man. Because of this, ambient air monitoring programs almost always require that the concentration of this material be determined. Many of the instruments in use today for the monitoring of sulfur dioxide suffer from several shortcomings. First generation instrumentation, employing automated wet chemical procedures, suffer from interferences by other pollutants such as ozone. Additionally, an inordinate amount of time and manpower is required to maintain them in operating condition. Newer techniques, generally considered as second generation analyzers, tend to be non-specific to sulfur dioxide, require complex flow and temperature control, and require support equipment such as hydrogen cylinders or generators.

Thermo Electron's patented (#3,845,309) Pulsed Fluorescent concept is generally considered as the first third generation ambient sulfur dioxide analyzer.

1.2 The following equations describe the fluorescence phenomenon:

$$SO_2 + h\nu_1 \rightarrow SO_2^*$$

$$SO_2^* \rightarrow SO_2 + h\nu_2$$

where:

SO_2 - Sulfur Dioxide
SO_2^* - electronically excited SO_2
$h\nu_1$ - ultraviolet radiation, 230-190 nm wavelength
$h\nu_2$ - fluorescence

1.3 The method used in the TECO for sulfur dioxide (SO_2) detection is Pulsed Fluorescence. A gas sample is submitted to a source of pulsed ultraviolet illumination through a monochromatic filter (narrow bandpass). SO_2 molecules, energized by the high intensity pulsed light source, emit an SO_2 specific illumination which, through a second narrow band filter, impinges upon the sensitive surface of a photomultiplier tube. The emitted light is linearly proportional to the concentration of SO_2 molecules in the sample. Electronic, solid state amplification of the output of the photomultiplier tube and signal conditioning for the elimination of signal noise, provide a meter reading and an electronic analog signal for recorder output.

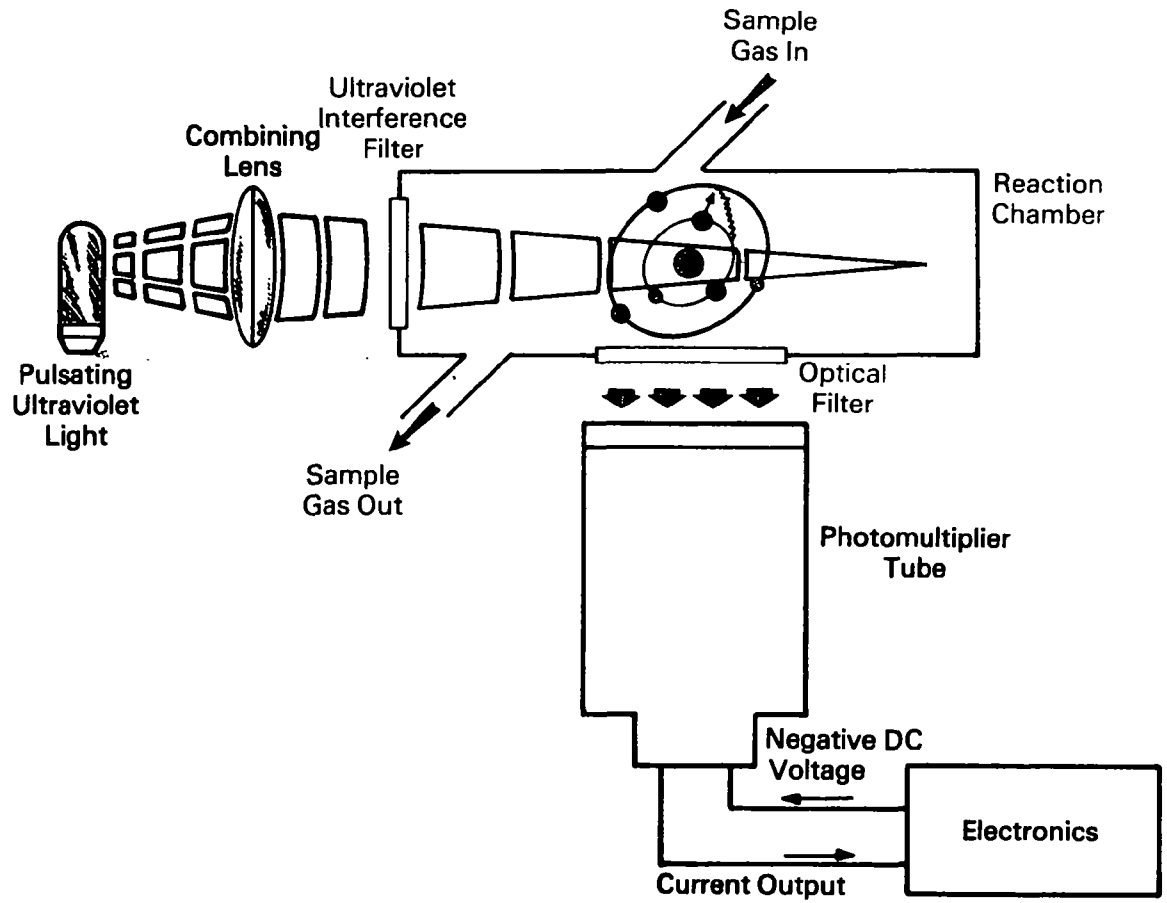

Thermo Electron Model 43 Pulsed Fluorescent SO_2 Analyzer

Principle of Operation

ERT

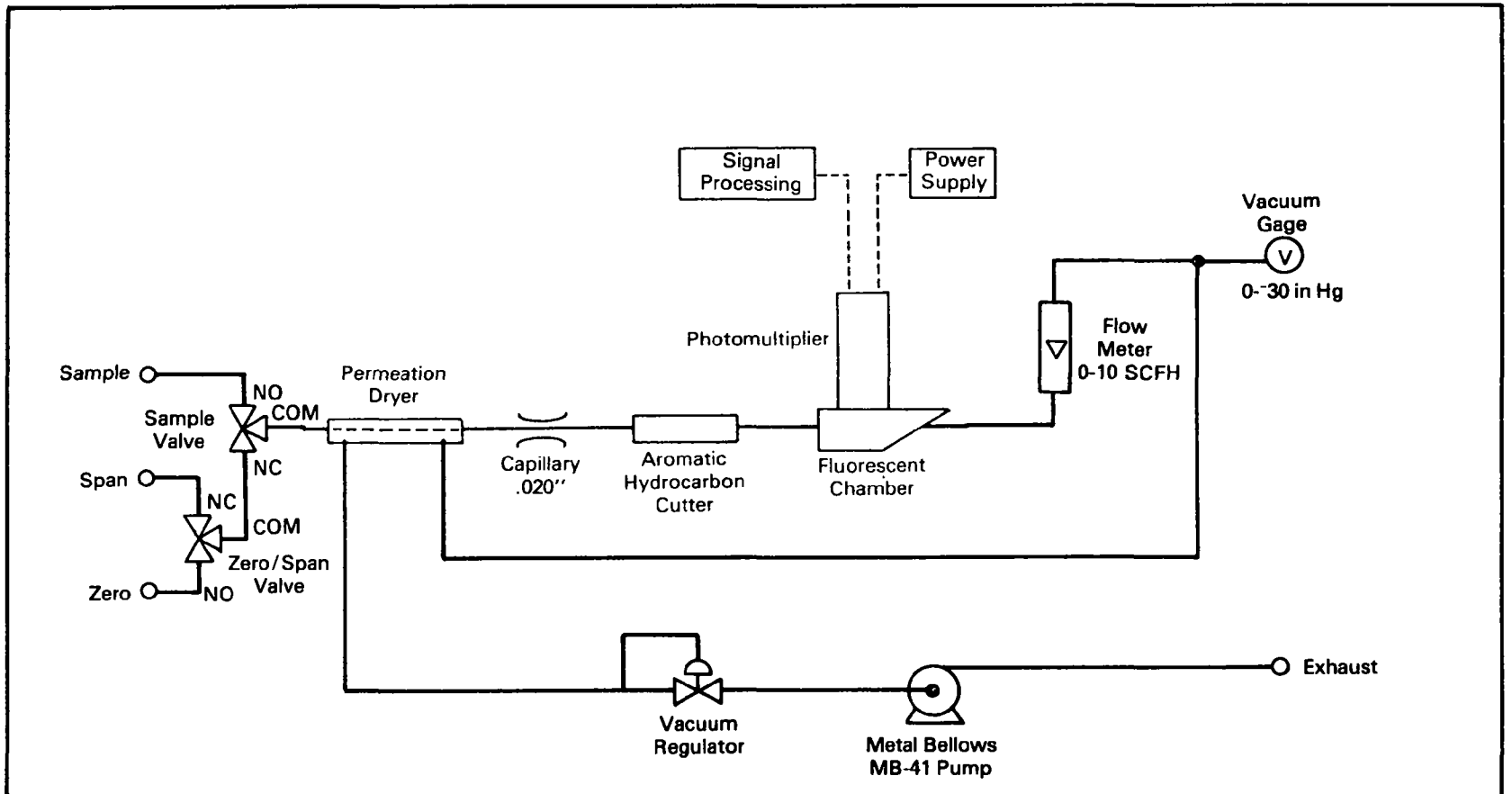

Thermo Electron Model 43 Pulsed Fluorescent SO_2 Analyzer

Gas Flow Schematic

ERT

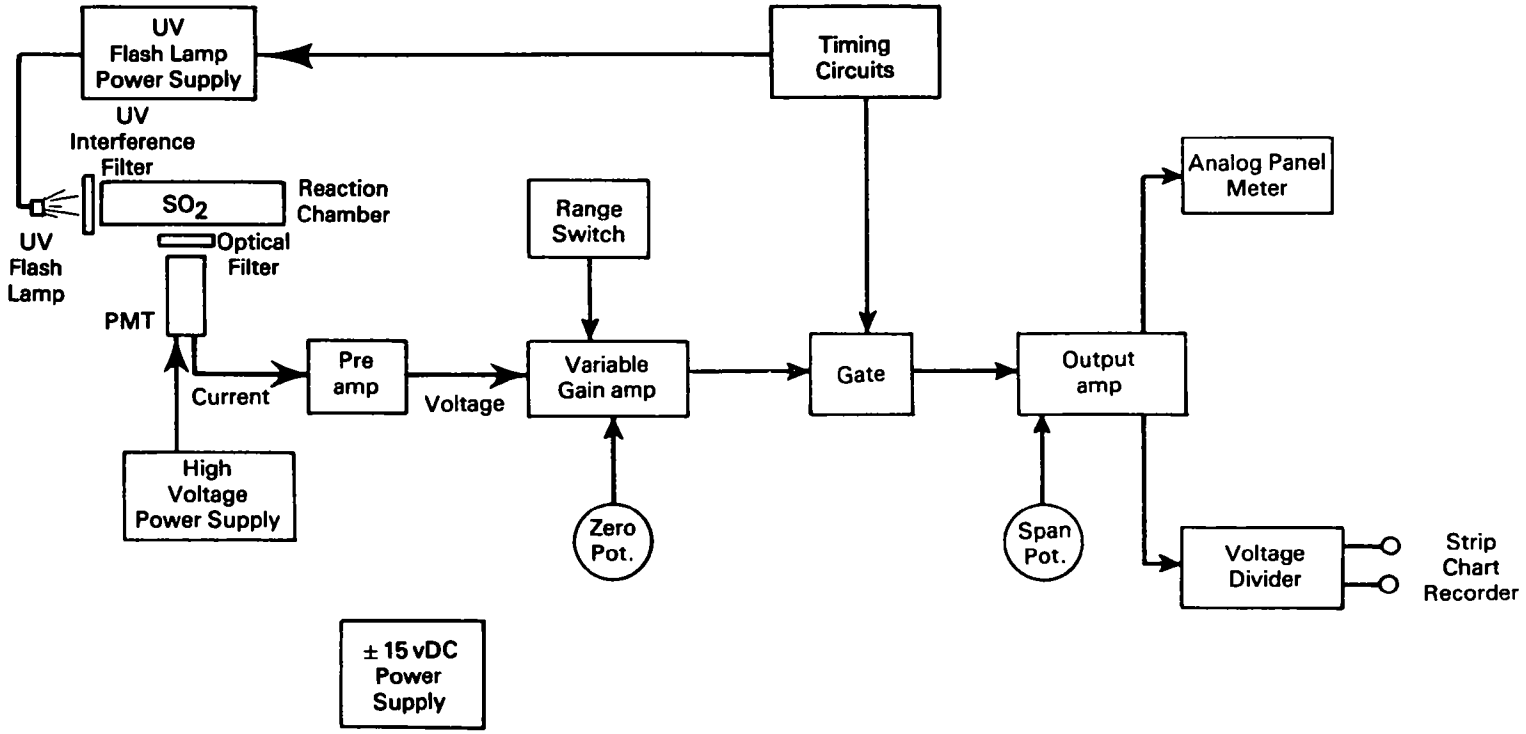

Thermo Electron Model 43 Pulsed Fluorescent SO_2 Analyzer

Electronic Block Diagram

STANDARD OPERATING PROCEDURE

Title:

Date: 3/1/79
Number: 005
Revision: 0

Routine Operation of the Teco Model 43 Pulsed Fluorescent SO_2 Analyzer

Prepared by ERT for the Puerto Rico
Environmental Quality Board under
Contract No. 68-02-2542

STANDARD OPERATING PROCEDURE

Date: 3/1/79

Title: Routine Operation of the Teco Model 43 Pulsed Fluorescent SO_2 Analyzer

Number: 005

Revision: 0

1.0 Applicability

This procedure is to be used as a supplement to SOP 001 EQB Field Site Routine Visit at those sites where SO_2 is measured with the Teco Model 43 Pulsed Fluorescence analyzer. Responsibilities and the methodology of data validation outlined in SOP 001 apply to this procedure and to the use of Status/Data Assessment Sheet 001-A.

2.0 Checks to be Performed Every Site Visit

2.1 Check that the shelter temperature is between 67°F and 78°F, and that the manifold pump and calibration controller are functioning properly. Check that the calibrator temperature is within ±0.1°C of designated. Note any adjustments in Field Station Log.

2.2 Teco 43 Checks - Note whether ball height on rotameter is between 2 and 4. If it is not, clean the flow capillary. Open the left section of the front panel. Check that pressure regulator reads 10 ± 0.1 in. Hg. Adjust if necessary using the diaphragm regulator.

2.3 SO_2 Data Checks - roll back strip chart to the time of the last visit. Check that all prior baselines are 0 ± 0.005 ppm (0.10V). If recorder has been offset 10%, allowable baseline range will be 0.9 VDC to 1.1 VDC on strip chart. Check that all spans are within ±15% of designated. Adjust baseline and/or perform manual span check to verify that instrument is now within calibration specs, if necessary.

3.0 Manual Calibration

Perform a manual zero and span check at least once a week unless specified more frequently in network QA plan.

4.0 Weekly Checks

4.1 Check that the cooling fan and pump are working. Inspect the capillary. Clean or replace if necessary. Verify that the UV lamp is working by listening for a clicking sound which indicates pulsation.

4.2 Perform PC board full scale check according to the manufacturer's manual. Also perform full scale check of output amplifier board. Note whether outputs are within specs listed on sheet.

5.0 Bi-Weekly Maintenance

Every other week change the particulate filter and indicate on the assessment sheet.

6.0 Periodic Maintenance

Multipoint span checks should be performed according to the schedule indicated in the network QA plan, and the instrument should be recalibrated if necessary. Every 12 months the hydrocarbon cutter should be replaced and this action noted in the field station log.

7.0 Audits

The Divisional Quality Assurance Officer shall conduct audits of this procedure. Corrective action will be taken as necessary.

STATUS/DATA ASSESSMENT SHEET 001A

SOP 001

TECO MODEL 43 SO_2

NETWORK:_____ STATION:_____ STATION NO.:_____

OPERATOR:_____ WEEK ENDING:_____

					DATA		
DATE:	____	____	____	____			
LOCAL STANDARD TIME:	____	____	____	____	Valid	Suspect	Inval
	✓ or NO*						
SHELTER STATUS:							
Temp. = 67° - 78°F?	____	____	____	____			
Manifold Pump OK?	____	____	____	____			
Calibration Controller OK?	____	____	____	____			
CALIBRATOR:							
Temp. = Des. ±0.1°C	____	____	____	____			
TECO 43 STATUS:							
Flow Rate = 2 to 4 SCFH?	____	____	____	____			
Pressure at 10 ± 0.1" Hg?	____	____	____	____			
Strip Chart Time, Supply Marked?	____	____	____	____			
TECO 43 DATA:							
All Prior BLs 0 ppm ± 0.005 ppm (0.10V)	____	____	____	____			
All prior Spans ±15% of Desig.	____	____	____	____			
Entire prior chart OK?	____	____	____	____			

MANUAL CALIBRATION: DATE ____ ____

Zero = 0 ± 0.005 ppm (0.10V)? ____ ____

Calibrator Flow ± .5 mm of Des.? ____ ____

Teco output ±15% of Des.? ____ ____

WEEKLY CHECKS:

Cooling fan working?_____ Pump OK?_____ Capillaries clean?_____ UV lamp working?_____

PC Board: FS = 10 ± 0.01 Volts?_____

Output Board: FS = 10 ± 0.01 V?_____

BI-WEEKLY: Particulate filter changed? _____

*Explanations of all NO entries should appear in the field station log.

EQB Form 001-A

BENDIX CO ANALYZER

MODEL 8501-5CA

BENDIX MODEL 8501-5CA CO MONITOR

Prepared Class Notes

1. INTRODUCTION

1.1 The method used in the Bendix for carbon monoxide (CO) detection is infrared light absorption. A single infrared light beam is alternately modulated between a sample and reference (CO free) cells. An infrared light detector coupled to the sample and reference cells exhibits a capacitance change proportional to the amount of CO present in the sample cell. The principle of measurement is based on CO having a known characteristic absorption spectra in the infrared range.

1.2 The relationship of detection is as follows:

$$\Delta C \sim 1 - e^{-\Delta c l}$$

where

C is capacitance change

c is CO concentration

l is cuvette length

1.3 Converting the change in capacitance in the detection chamber to an output usable for a recorder requires the use of electronic circuitry and the associated plumbing to condition the sample prior to injection into the sample cell of the detector. For the purpose of calibrating, the analyzer plumbing is also required for injecting zero and span gases.

1.4 This analyzer, like most others, can be subdivided into three systems:

a) pneumatics

b) optics

c) electronics

1.5 Basic Infrared Absorption Gas Analyzer Technique optical bench (see Figure 7-5 in manual) consists of:

- infrared light source
- absorption cell of certain pathlength
- detector

1.5.1 Sample air is passed through the absorption cell. CO absorbs (or attenuates) the light and thus the reduction in light is a quantitative measure of the CO present in the sample.

1.5.2 In order to determine how much CO is present in the sample, there is a constant referencing against a reference cell filled with a nonabsorbing (CO free) gas (nitrogen). The detector will produce a change in capacitance if there is an imbalance between the sample and reference chambers (if CO is present in the sample).

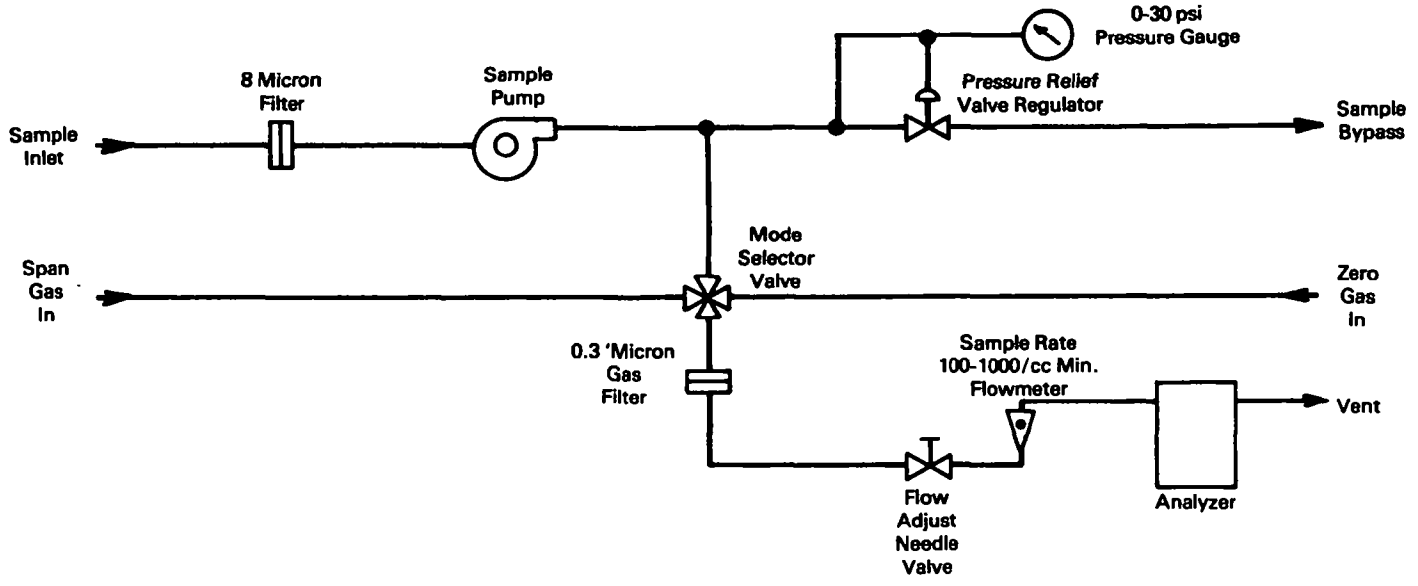

Bendix 8501-SCA Carbon Monoxide Analyzer
Flow Diagram

ERT

STANDARD OPERATING PROCEDURE

Title:

Date: 3/1/79
Number: 007
Revision: 0

ROUTINE SITE VISIT AND PERIODIC MAINTENANCE
OF THE BENDIX 8501-5CA CO ANALYZER

Prepared by

ENVIRONMENTAL RESEARCH & TECHNOLOGY, INC.
for the Puerto Rico Environmental Quality Board
Under Contract No. 68-02-2542

STANDARD OPERATING PROCEDURE

Title: ROUTINE SITE VISIT AND PERIODIC MAINTENANCE OF BENDIX 8501-5CA CO ANALYZER

Date: 3/1/79
Number: 007
Revision: 0

1.0 Applicability

1.1 Applicability. This SOP addresses sites where carbon monoxide is measured using the Bendix 8501-5CA. This procedure is to be used as a supplement to SOP 001 EQB Field Site Routine Visit.

2.0 Data Validity and Instrument Status

2.1 The Status/Data Assessment Sheet 001-B is to be filled out at least once each week.

2.2 The check-off procedure requires the entering of a check (✓), indicating YES, or a NO for each item. The entering of a NO often indicates that on-site corrective action or notification of district personnel for corrective action assistance is required. The appropriate action should be taken and stated in the field station log.

2.3 Spaces are provided on the sheets for identifying data as valid, suspect, or invalid. The field technician is required to classify all data obtained during the week, by date and time, based on the criteria listed and THE BEST JUDGMENT OF THE FIELD TECHNICIAN.

3.0 Routine Checks (each site visit)

3.1 Bendix 8501-5CA CO Analyzer (Status/Data Assessment Sheet)

3.1.1 Status - Verify that strip chart time is accurate, supply is adequate until next visit, and date and time of visit are clearly marked. Check that sample flow is set at ball height 3.0 and pressure of calibration gases are greater than 300 psi. NOTE: If ball height requires adjustment see Paragraph 4.1.2 before adjusting.

3.1.2 Data - Verify that all prior zeros are between 8% and 12% of full recorder scale (0 ± 1 ppm) and all prior spans are within ±5% of designated span value. If not, does manual recalibration correct the problem? (See weekly checks.)

NOTE: This instrument is run with a zero instrument baseline and a 10% baseline offset on the recorder. Thus, the full scale on the recorder will be 45 ppm.

3.1.3 If the unit is not capable of automatic zero and span, these functions should be performed manually at each visit and results indicated under status. See weekly checks for calibration procedure.

STANDARD OPERATING PROCEDURE

Title: ROUTINE SITE VISIT AND PERIODIC MAINTENANCE OF BENDIX 8501-5CA CO ANALYZER

Date: 3/1/79
Number: 007
Revision: 0

4.0 Weekly Checks

4.1 Perform the checks indicated on the assessment sheet. Drain any condensate in the glass bowl containing the sample filter. Normal replacement interval is once a month for the sample filter and once every six months for the gas filter. Note filter replacements in the log. Perform a manual calibration as follows.

4.1.1 With instrument in the 50 ppm (Normal Operational) range, set mode selector valve to zero.

4.1.2 Note if ball height is 3.0 ± 1 cm. Do not readjust at this time. Complete steps 4.1.3-4.1.5. Then readjust flow to Ball Height 3.0 and complete steps 4.1.6-4.1.8.

4.1.3 After the output has stabilized, put filter switch to out position. Verify that noise extreme is 0.2 VDC or less.

4.1.4 Return filter switch to in and record initial zero as read on a DVM. Make no adjustment.

NOTE: On 50 ppm range, PPM=VDC X 5.

4.1.5 Turn mode selector valve to span. After instrument output has stabilized, record SPAN value as read on a DVM and converted to ppm. If ball height was 3.0 ± 1 cm and initial zero is 0 ± 1 ppm and initial span is within ±5% of the tank concentration, the instrument is in calibration. If the readings are outside these limits, proceed to step 4.1.6.

4.1.6 Turn mode selector valve to zero. After stabilization, reset zero adjust to obtain a zero ±1 ppm output.

4.1.7 Turn mode selector valve to span. After stabilization, reset span adjust to obtain an output equivalent to the designated cylinder output ±5%.

4.1.8 Return mode selector valve to zero and check that output after stabilization is as set in step 4.1.6. If it is not, repeat steps 4.1.6 through 4.1.8 until stable readings are obtained. Note that final values are in spec and the previous and current settings for zero and span pots.

NOTE: Calibrations should be performed only with certified cylinders of gas.

5.0 Quality Assurance Audit

The Divisional Quality Assurance Officer will conduct periodic audits of the procedure discussed above and corrective action will be taken as necessary.

STATUS/DATA ASSESSMENT SHEET

BENDIX 8501-5CA-CO ANALYZER

NETWORK_____ STATION_____ STATION NUMBER_____

OPERATOR_____ WEEK ENDING_____

DATE	___	___	___	___			
LOCAL STANDARD TIME	___	___	___	___			
	✓ or NO*				DATA VALID (Show date and time for each category)	SUSPECT	INVALID
SHELTER STATUS: Temp. (67-78°F)	___	___	___	___			
Manifold Pump OK?	___	___	___	___			
BENDIX CO STATUS: S/N_____							
Strip Chart time, supply marked?	___	___	___	___			
Sample flow = 3.00 ± 1 cm?	___	___	___	___			
Cal. Gases > 300 psi?	___	___	___	___	___	___	___
DATA: Strip chart?	___	___	___	___			
All prior Os 8-12%?	___	___	___	___			
All prior spans ±5% of Des.?	___	___	___	___			
If not, is recal. OK?	___	___	___	___			
Entire prior chart OK?	___	___	___	___	___	___	___
NORMAL CONDITIONS?	___	___	___	___			

WEEKLY CHECKS

BENDIX CO

Back pressure ± 1 psi of Des.?_____

Sample filter clean?_____ Gas filter clean?_____

Manifold connections tight?_____ Vent lines unobstructed?_____

Unfiltered noise < 0.2V?_____

CALIBRATION:

Initial: Zero_____ppm Span_____ppm

Final: Zero = 0 ± 1 ppm?_____ Span = Des. ppm ± 5%?_____

Zero Pot. Prev./Current_____/_____ Span Pot. Prev./Current_____/_____

*Explanation of all NO entries should appear in field station log.

EOB Form 001-B

DASIBI O_3 ANALYZER

MODEL 1003 PC

DASIBI MODEL 1003PC
OZONE ANALYZER
PREPARED CLASS NOTES

DASIBI MODEL 1003-PC OZONE MONITOR

Prepared Class Notes

1. INTRODUCTION

1.1 The method used in the Dasibi for ozone (O_3) detection is light absorption. Because of the particular structure of the O_3 molecule, it will absorb light energy at and about the wavelength of 254 nanometers (nm) [long ultraviolet (UV) region]. No other molecule normally found in ambient air will absorb as much light energy at this frequency as O_3.

1.2 Beer-Lambert Law

$$I_{out} = I_{in} \exp(-_x LC)$$

I_{out} = Light Intensity Out

I_{in} = Light Intensity In

X = Absorption Coefficient

L = Path Length

C = Concentration

1.3

VARIABLES		CONSTANT
DEPENDENT	INDEPENDENT	
Light Intensity	Flow	Absorption Coefficient
Pressure		
Temperature		
Concentration		
Path Length		

1.4 Basic UV Photometer Technique

Measuring cell consists of:

- UV source 254 nm
- Absorption cell of certain path length
- Detector

1.4.1 Sample air is passed through the absorption cell. Ozone attenuates the light. The reduction in light is a quantitative measure of the O_3 present in the sample.

1.4.2 Questions

- How much light did we start with?
- How much light is lost in the cell with no O_3 present?
- How can one tell zero concentration of O_3 if some absorption takes place with no O_3 present?
- What happens when the light source changes intensity?
- What happens if the detector's sensitivity changes?

1.4.3 Conditions for Using UV Photometry

- An air sample with a zero O_3 concentration.
- An air sample identical to the first in its light absorbing properties except for the unknown O_3 concentration.
- A UV light source of known wavelength and fixed intensity.
- A stable detector.
- A known and fixed path length.
- The value of X, the absorption coefficient at the wavelength being used.
- Standard pressure and temperature reference.

BEER-LAMBERT LAW

BASIC EQUATION

$$I_{OUT} = I_{IN}e^{-(XLC)}$$

I_{IN} = LIGHT INTENSITY IN

I_{OUT} = LIGHT INTENSITY OUT

X = ABSORPTION COEFFICIENT

L = PATH LENGTH

C = CONCENTRATION

ERT

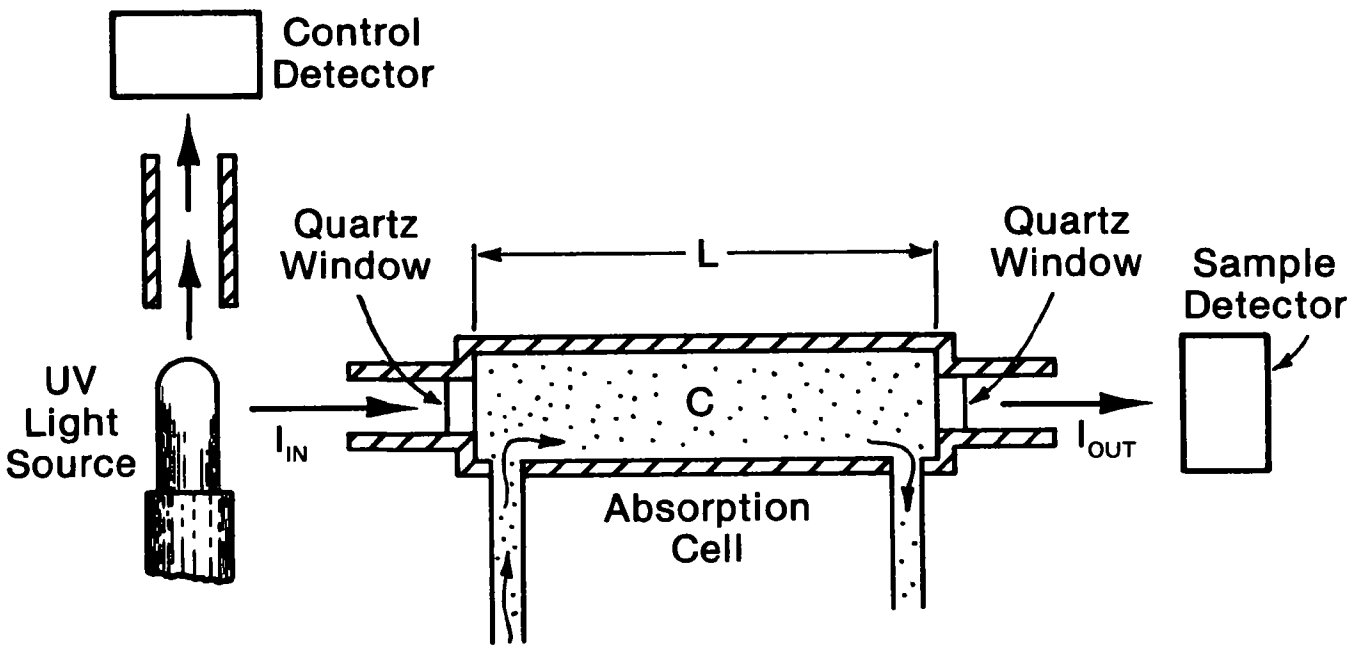

BASIC UV PHOTOMETER TECHNIQUE

ERT

CONDITIONS FOR USING UV PHOTOMETRY

1) AN AIR SAMPLE WITH A ZERO OZONE CONCENTRATION

2) AN AIR SAMPLE IDENTICAL TO THE FIRST IN ITS LIGHT ABSORBING PROPERTIES EXCEPT FOR THE UNKNOWN OZONE CONCENTRATION

3) AN UV LIGHT SOURCE OF KNOWN WAVELENGTH AND FIXED INTENSITY

4) A STABLE DETECTOR

5) A KNOWN AND FIXED PATH LENGTH

6) THE VALUE OF X, THE ABSORPTION COEFFICIENT AT THE WAVELENGTH BEING USED

7) STANDARD PRESSURE AND TEMPERATURE REFERENCE

ERT

7904139

STANDARD OPERATING PROCEDURE

Title:

Date: 3/1/79
Number: 008
Revision: 0

Routine Operation And Maintenance of the Dasibi Model 1003
Ozone Analyzer

Prepared by ERT for the Puerto Rico
Environmental Quality Board Under
Contract No. 68-02-2542

STANDARD OPERATING PROCEDURE

Title: Routine Operation And Maintenance of the Dasibi Model 1003 Ozone Analyzer

Date: 3/1/79
Number: 008
Revision: 0

1.0 Applicability

This procedure is to be used as a supplement to SOP 001, EQB Field Site Routine Visit at those sites where ozone is measured with the Dasibi Model 1003-PC Ozone Monitor. This SOP includes both routine operation and maintenance of the instrument. There is practically no reason to remove the instrument from the shelter since it is relatively easy to maintain.

2.0 Checks to be Performed Every Site Visit

2.1 Check that the shelter temperature is between 67°F and 78°F and that the manifold pump is functioning properly.

2.2 Ozone Data Checks - Roll back strip chart to time of last visit, check for any indications of noisy operation and verify chart time. Instrument's zero offset should be recorded on strip chart.

2.3 Sample flow - The front panel flowmeter should read 2 1/min. Tap the flowmeter to make sure the float is not stuck and is actually reading the proper value.

2.4 Span - Turn the mode switch to SPAN, record the readout value from the front panel. The first three digits of the display should agree with the first three span set switches.

2.5 Analog span - With the mode switch still in SPAN, read the analog value off of the strip chart recorder. If SPAN is 54.950 then the recorder should read 9.50. If it does not, adjust to the proper value. A record of SPAN numbers should be kept with all data to serve as a reference should it ever be necessary to adjust data later.

2.6 Control Frequency - Switch the mode switch to CONTROL FREQ and record the value. The reading should be between 23.0 and 28.0, if below 23.0, adjust to 27.5 by repositioning detector. Refer to manual, Section 2.3.5.

2.7 Sample Frequency - Switch to SAMPLE FREQ. and record the value. Reading should be between 35.0 and 48.0. If below 35.0 the optics need to be cleaned.

2.8 Zero Check - Switch to ZERO. The zero offset pot should be at zero. Check the recorder to make sure that it is actually recording zero. If it is not, adjust the recorder zero or the instrument zero as described in the operation section. If a zero adjustment is made repeat part 2.5 above.

2.9 Make sure all sample and manifold lines are connected as they should be, especially if a calibration or repair has just been completed. Check that the function switch is in the OPERATE mode.

STANDARD OPERATING PROCEDURE

Title: Routine Operation and Maintenance of the Dasibi Model 1003 Ozone Analyzer

Date: 3/1/79
Number: 008
Revision: 0

3.0 Monthly Checks

3.1 Measure power supply voltages on mother board:

+5VDC	±0.25V
±15VDC	±0.75V
±24VDC	±1.2V
±200VDC	±20V

3.2 Cycle time adjust. Check cycle time by observing each time the L.E.D. in the upper left hand corner of the display flashes. It should be more than 20 seconds and less than 30 seconds. If necessary, adjust R8 on the timing circuit board.

3.3 Measure temperature control voltage on mother board;

2.9VDC ±.2V	(old style)
4.4VDC ±.2V	(new style)

3.4 Adjust analog zero by connecting DVM to recorder output terminals. Put mode selector switch in zero. Adjust recorder output with R3 on D/A board.

3.5 Move mode switch to span. The first 3 digits of the display should agree with the first three span set switches. Connect DVM to recorder terminals. Voltage displayed on DVM should be the same as the last 3 digits on the analyzer display. (Example: span reading is 54.590. DVM should read 9.50 volts ± .1V.)

3.6 Move mode switch to sample frequency. Reading should be between 35.0 and 48.0. If it is too high, adjust UV lamp. If it is too low, clean optics. If it is still too low after the optics have been cleaned, adjust the UV lamp. If the reading is too low after UV lamp has been adjusted, the lamp should be replaced. (see manual)

3.7 Move mode switch to control frequency. Reading should be between 23.0 and 28.0. If it is either too high or too low, adjust control detector. (see manual)

3.8 Move mode switch to operate. Disconnect power to valve and sample pump. Make sure the zero offset swtich is at the zero position. Remove the 3 jumpers on the logic board.

Observe the following sequence on the display.

a) Resets to zero and pauses.
b) Counts up to the present span number and pauses.
c) Counts down to some number close to .005 and pauses.

Allow the analyzer to complete several cycles. The displayed number should not change more than ±2 digits. Find the average of the cycles (ex: .049, .047, .046, .050, .049 = .048).

STANDARD OPERATING PROCEDURE

Date: 3/1/79
Number: 008
Revision: 0

Title: Routine Operation and Maintenance of the Dasibi Model 1003 Ozone Analyzer

3.9 Subtract .050 from the average. (Ex: .048 - .050 + -.002.) This is the analyzer zero offset. In this case it is -2PPB. Affix a card displaying this number on the analyzer's front panel.

3.10 Reconnect power to sample pump and valve.

3.11 System Leak Check - Remove the sample line from the rear fitting and hold your finger over the fitting opening. The flow, as indicated on the rotameter, should drop to zero. If it does not, there is a leak in the system which must be closed off.

3.12 Solenoid Valve Leak Check - Remove the scrubber. Block the ell connector on the side of the solenoid where the scrubber was connected (your finger will do). Watch the flowmeter and notice that the flow drops to zero for 1/2 of the measurement cycle and returns to its original flow for the other half.

Now block the tee on the other side of the solenoid where the other side of the scrubber was connected and at the same time block the sample inlet connector. If the flow does not drop all the way to zero, there is a leak across the solenoid and it should be replaced.

3.13 Scrubber Efficiency Check - Turn on the built-in ozone source, direct its output to the analyzers inlet, and adjust it until the monitor reads between 0.5 and 1.0 ppm. The ozonator need not be stabilized for this test so there is no need to wait for the source to warm up. Once the instrument is reading ozone, switch the mode switch to SAMPLE FREQ. When the instrument is reading sample frequency, record at least 5 consecutive readings in order to find a good average. After the last reading, switch the ozonator off but leave the air flow on and take 5 more readings. Average these 5 readings and subtract the first average from the number thus obtained. If you did not notice any drift in the frequency while you were recording the numbers, then the difference between the two averages represents how much ozone is contained in the reference (zero) gas. The scrubber efficiency should be better than 96%. If not, replace scrubber.

3.14 Replace particulate filter.

STATUS/DATA ASSESSMENT SHEET

DASIBI MODEL 1003 O_3 MONITOR Form 001-C

NETWORK:_____ STATION:_____ STATION NO.:_____

OPERATOR:_____ WEEK ENDING:_____

					DATA		
DATE:							
LOCAL STANDARD TIME:					Valid	Suspect	Invalid
	✓ or NO*						
SHELTER STATUS:							
Temp. = 67° - 78°F?							
Manifold Pump OK?							
DASIBI DAILY CHECKS:							
Sample Flow 2 ℓ/min.							
Span No. - 54.950							
Control Frequency between 23.0 and 28.0							
Sample Frequency between 35.0 and 48.0							
Zero Offset Pot							
Zero Check							
Lines Connected Properly							
DASIBI MONTHLY CHECKS							
Mother Board Voltages							
+5VDC ± 0.25V							
±15VDC ± 0.75V							
±24VDC ± 1.2V							
±200VDC ± 20V							
Cycle Time between 20 and 30 sec							
Temperature Control Voltage							
Analog Zero							
Span = 54.950							
Sample Frequency between 35.0 and 48.0							
Control Frequency between 23.0 and 28.0							
Determine Zero Offset							
System Leak Check							
Solenoid Valve Leak Check							
Scrubber Efficiency >96%							
Replace Particulate Filter							

*Explanation of all NO entries should appear in field station log

Appendix F
to the Final Report

Data Services Training Manual

DATA SERVICES TRAINING MANUAL

Data Services Training Program

developed by

ENVIRONMENTAL RESEARCH & TECHNOLOGY, INC.

for the

PUERTO RICO ENVIRONMENTAL QUALITY BOARD

TABLE OF CONTENTS

I Introduction

1. Purpose. 1
2. Specific Goals 1

II Stripchart Preparation and Interpretation

1. Definition of the Operating Network 2
2. Preparing Stripcharts for Digitizing 2-3
3. Chart Speed Changes and Other Time Discrepancy Problems 3-4
4. Interpretating the Stripcharts 4
5. Definition of Responsibilities in Handling Stripcharts 4-5
6. Figures 1-8 6-13

III Validation - General

1. Standard Operating Procedure 14
2. Review of Field Assessment Sheets 14
3. Documentation 14-15

IV Validation - Use of Calibration Data

1. Types of Calibrators 16
2. Examples of Multipoint Calibrations 16-21
3. Applying Results of Calibrations 22
4. Examples of Multipoint Calibration to Interpret 22-25
5. Interpretation of Calibrations in Item 4 above as done by ERT 22-31

Appendix A - Scientific Inventories and Reports Division Draft SOPs

I INTRODUCTION

1. Purpose

A Data Services Training Program has been developed for the Puerto Rico Environmental Quality Board by Environmental Research & Technology, Inc. (ERT) under a contract for the Environmental Protection Agency. The training program covers the following areas:

1.1 Stripchart coding and interpretation.

1.2 Specific information concerning the processing of data from the following instruments.

1.2.1 Thermo-Electron (Teco) Model 43 Pulsed Fluorescent SO_2 Analyzer

1.2.2 Dasibi Model 1003 PC O_3 Monitor.

1.2.3 Bendix Model 8501-5CA CO Analyzer

1.3 Validation and Using Calibration results in the validation process.

2. The specific goals of this program are:

2.1 To define the basic steps in handling stripchart data.

2.2 To familarize students with data output from the various instruments.

2.3 To define documentation associated with validated data (traceable data).

2.4 To familarize students with concepts concerning calibration results and how they can be applied to the data.

3. An examination will be given at the end of the program. This will serve to evaluate student performance.

Upon successful completion of this portion of the training program, the EQB personnel will be prepared to develop the data organization structure required under the aforementioned contract. ERT will digitize all data collected during the duration of the 6-month program. While it is EQB's responsibility to validate the data, once the program is completed, the stripchart digitizing responsibility is transferred to EQB.

II. STRIPCHART PREPARATION and INTERPRETATION

1. Definition of the Operating Network

In order to accurately read or interpret stripcharts it is necessary to define the specifics of the operating network.

-What kind of data is being collected?
-How is it being collected?
-When was it collected?

ERT uses a task request form which is helpful in defining the network (See Figure 1 Form 1410-1 (2-77)). This type of form defines the details of the operation and can be used to insure that all involved in the operation are aware of the specifics. This form also serves as a reference for those people who are not directly involved in the project but might occasionally need specific information. The most important reason for using this type of form is that all the information needed to read and code the stripcharts is contained on the two page form.

2. Preparing Stripcharts for Digitizing

2.1 Set up a log-in sheet for charts. Log them in when received from field. Also make note when charts are shipped out or received back after the initial log-in date (See Figure 2 Form 1603 (6/77).

2.2 Basic requirements for marking charts:

2.2.1 Chart should be labeled at the beginning and end with the following information (See Figure 3).

START (or) END
Code of site and parameter
Inclusive dates on charts

2.2.2 Marking changes of data for each day (See Figure 4).

2.2.3 Marking of baselines, spans and areas of invalid data as required by particular parameter SOP's. (See Figure 4)

2.2.4 Marking "Not to be Digitized" the inclusive questionable period when span or baseline falls out of acceptable limit as specified in particular parameter SOP. (See Figure 5 & 6)

2.2.5 Marking of beginning and ending times of periods of interrupted service. (See Figure 7)

2.2.6 On charts where time or recorder speed does not coincide with that marked on chart, the actual (true) time must be marked in increments not greater than 12 inches.

2.2.7 All pertinent information should be listed on stripchart coding form (See Figure 8 Form 1111) and this form is to accompany chart to digitizing.

3. Chart Speed Changes and Other Time Discrepancy Problems

3.1 There are essentially two time problems associated with recorders:

3.1.1 The recorder is advancing the paper at a speed greater or less than the prescribed rate (1 inch/hour, 3 inches/hour, etc.).

3.1.2 The paper is intermittently "hanging up" although the drive mechanism is moving at the proper speed.

3.1.3 Other problems include incorrect marking of the charts by the field technicians, power failures, no time at all marked by the field technicians, and total "hang up" of recorders.

3.2 When charts are required to register valid data for digitizing an historical network, it is essential that the proper times be indicated on the charts. Whenever the printed chart times or dates do not coincide with the times marked by the field technicians, the charts must be remarked for digitizing. Two ways of determining correct chart times utilize the following information:

3.2.1 Automatic calibartion should take place regularly at 24-hour intervals. Locate two calibrations and measure the distance in inches (or centimeters) between them.

- If the distance between the calibrations is not the prescribed interval (for example, 24 inches for 1 inch/hour chart speed), try to determine what caused the discrepancy (See 3.1). Measure other 24-hour intervals.

- If the distance between calibration spans is constant, the recorder is consistently fast or slow. Using a field technician visit time that coincides with a printed time (use previous week's chart if necessary), determine the exact time of the calibration closest in time to the visit. Then determine true midnights, mark them on the chart, and subdivide each day by at least every three hours. (Example: if 24 hours = 25 inches, then 12 hours = 12.5 inches, 6 hours = 6.25 inches.)

- It may be necessary to make different time adjustments on different days if the recorder is gaining or losing at a varying rate.

- When all marked times agree with station visit times, and/ or all calibrations occur in the same hour, the chart should require no further time adjustment corrections.

- If the distance between calibrations is constant and correct, but field technician and printed times do not agree, then chart paper is simply not properly aligned with respect to the printed times. A power failure or a field technician error is probably the cause. Remark the chart midnights correctly.

3.2.2 When dealing with charts where no regular calibration occurs, only station visit times can be used as references. Measure the distance between two station visit times and compare the distance between two station visit times and compare the distance with the prescribed chart speed distance. (Example; September 1, 10:45 AM to September 2, 11:35 AM. The elapsed time is 24 hours, 50 minutes or 24.8 hours. If the chart speed is 3 inches/hour, the distance should be 24.8 x 3 = 74.4 inches. If, for example, the measured distance is 76.4 inches, the chart has gained 2 inches or 40 minutes in a 24.8-hour period, about 1/2 inch in a 6-hour period, and 1/4 inch in 3-hours. Remark the chart using 9 1/4 inches for each 3-hour interval, correcting all midnights, and readjusting the correction factor as necessary). One should verify that all times marked on the chart agree with the field visit times.

3.2.3 All deviations from standard chart speed should be indicated on the chart if it is going to be digitized.

4. Interpretating the Stripcharts

4.1 Prior to submitting the charts for digitizing, the data and all appropriate documentation should be reviewed (See Appendix A SOP 16, 17 and 18).

4.2 All decisions on deleting of data and corrections for baseline adjustments should be made and the stripcharts and coding sheets should be marked appropriately (See 2.2).

5. Definition of Responsibilities in Handling of Stripcharts

5.1 Stripcharts coded by EQB personnel:

5.2 Stripcharts and coding sheets mailed to :

ERT
Data Services
696 Virginia Road
Concord, MA

by certified mail

5.3 ERT submits to Envirodata (Digitizing Subcontractor).

5.4 Envirodata returns data listings (and tape) to ERT (2 week turnaround).

5.5 ERT Data Services personnel scan data listing to spot any gross digitizing errors.

5.6 ERT Data Services mails data back to Puerto Rico by certified mail.

5.7 EQB subjects data to validation procedures.

5.8 EQB will report data to public and EPA as required by applicable negotiations.

Figure 1

Task Request Form

Requested by:_____ Project No.:_____
Date:_____ Task No.:_____

Client Name:_____

Network Name:_____

State(s)_____ Field Consultant:_____

Start-up Date:_____ End Date:_____

Type of Monitoring:* _____Historical_____ _____ Other_____

_____ Reduced Date Time Zone:_____

Data Classification:* Unedited_____ _____ Validated_____

Data Capture Requirements:_____

Type of Data Capture:_____

Report to be Prepared by (Department and name of writer):_____

_____

Products Needed for Report(s)_____

_____

_____

Date Products Due:_____ To Whom:_____

*Please Circle Appropriate Classification(s)

Parameter	Engineering Units	Format [1]	Output Data Conversion		Sensor Type	Recorder Voltage	Chart Speed
			Type [2]	Constants [3]			

[1] ".NNN", "N.NN", "NN.N", or "NNN."

[2] "Linear" or "Log"

[3] Endpoints of linear scale eg.
"0 mph = OV"; "80 mp = 10V",
0 → .500 ppm scale with a 5% Baseline Offset
on the strip chart ".000ppm = .5V"
".475ppm = 10V"

Task Request Form (Cont.)

Network and Site Code	Published Version of Site Name	Parameters												
	Parameter Codes													

Necessary Information to Produce First Report

Full Site Name	State	Downwind Direction	Distance From Plant	Elevation	UTM Coordinates	Saroad Number

Staffing Requirements: _____

_____

Authorized by: _____ Date: _____

Figure 2

ID	Start hr.	Inclusive dates	End hr.	field log sheets (✓)	date rcvd.	Comments	Digitizing	
							date out	date ret'd.

Figure 3

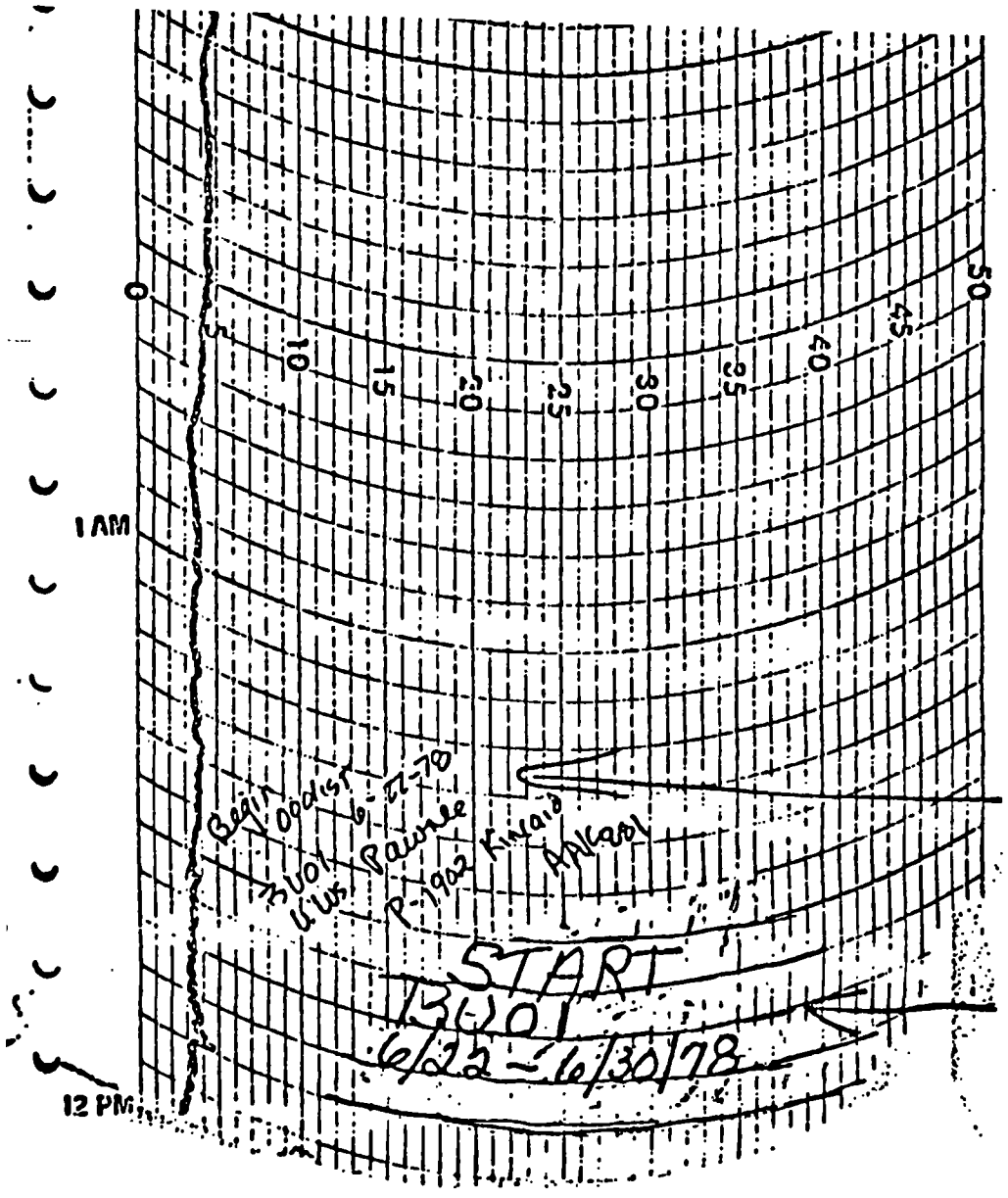

I.D. put on chart when received from the field.

Figure 6

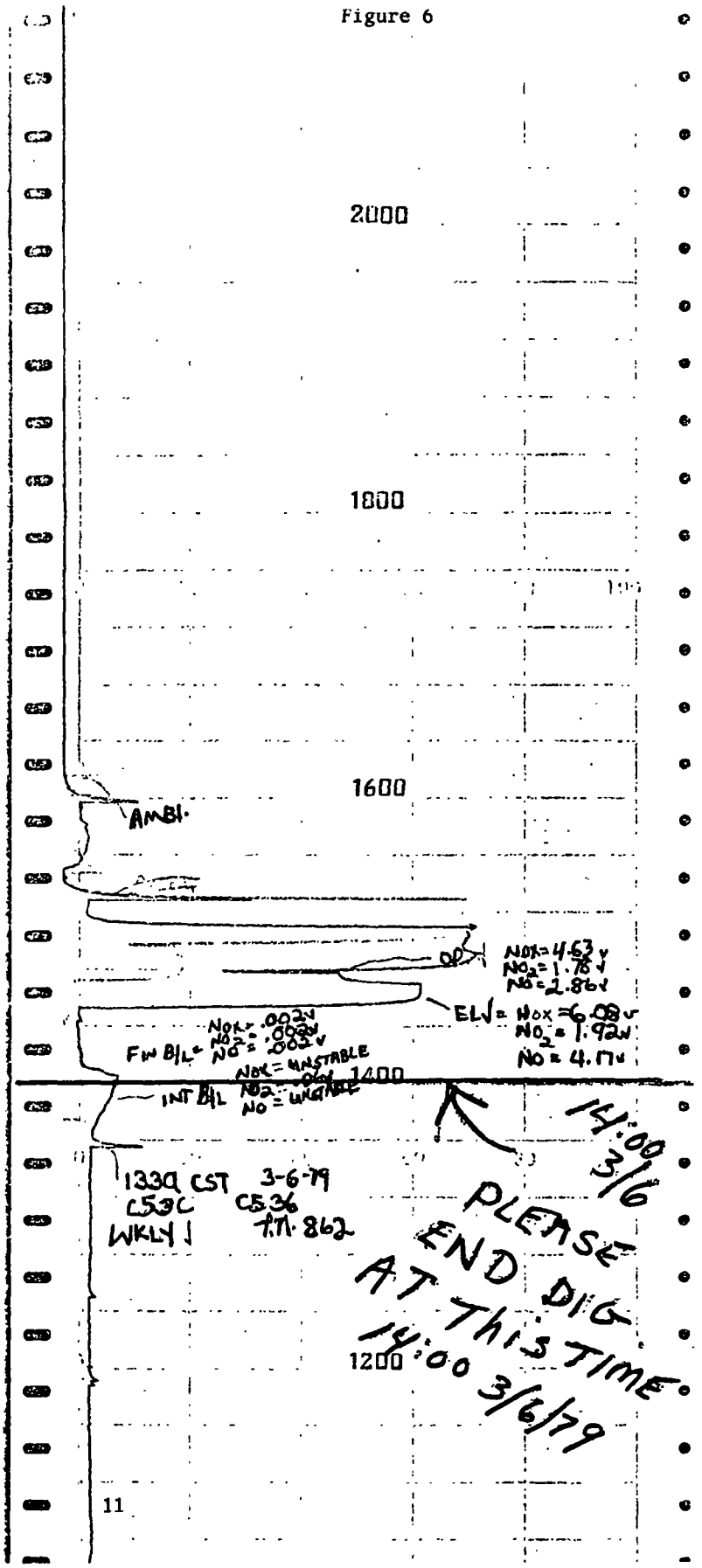
2000
1800
1600
AMBI.
NOx=4.63 v
NO2=1.78 v
NO=2.86 v
ELV= NOx=6.08 v
NO2=1.92 v
NO=4.17 v
FW B/L= NOx=.002 v
NO2=.003 v
NO=.002 v
INT B/L NOx=UNSTABLE
NO2=.004
NO=UNSTABLE
1400
1330 CST 3-6-79
C53C C536
WKLY T.T. 862
14:00 3/6
PLEASE END DIG AT THIS TIME.
14:00 3/6/79
1200

Figure 5

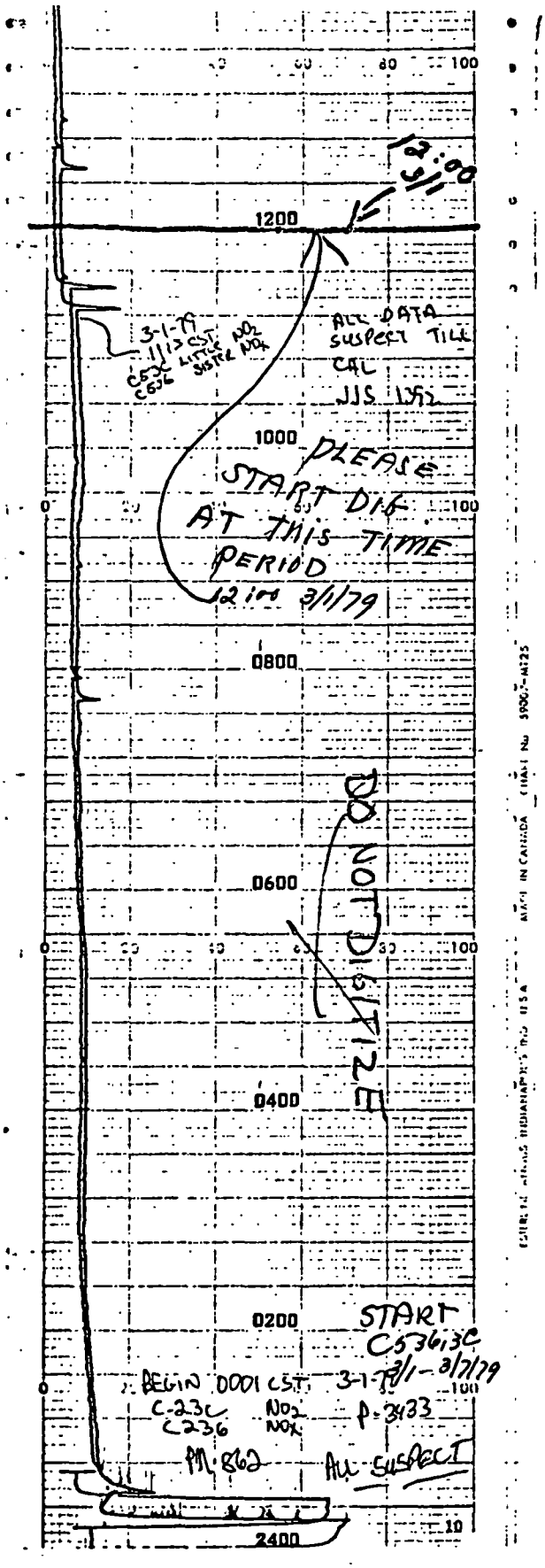

1200
1000
0800
0600
0400
0200
2400
12:00 3/1
3-1-79
1113 CST
C53C LITTLE NO2
C536 SISTER NOx
ALL DATA SUSPECT TILL CAL
JJS 1392
PLEASE START DIG AT THIS TIME PERIOD
12:00 3/1/79
DO NOT DIGITIZE
START C536,3C 3/1-3/7/79
BEGIN 0001 CST
C-23C NO2
C236 NOx
P-3433
PM 862
ALL SUSPECT

Figure 4

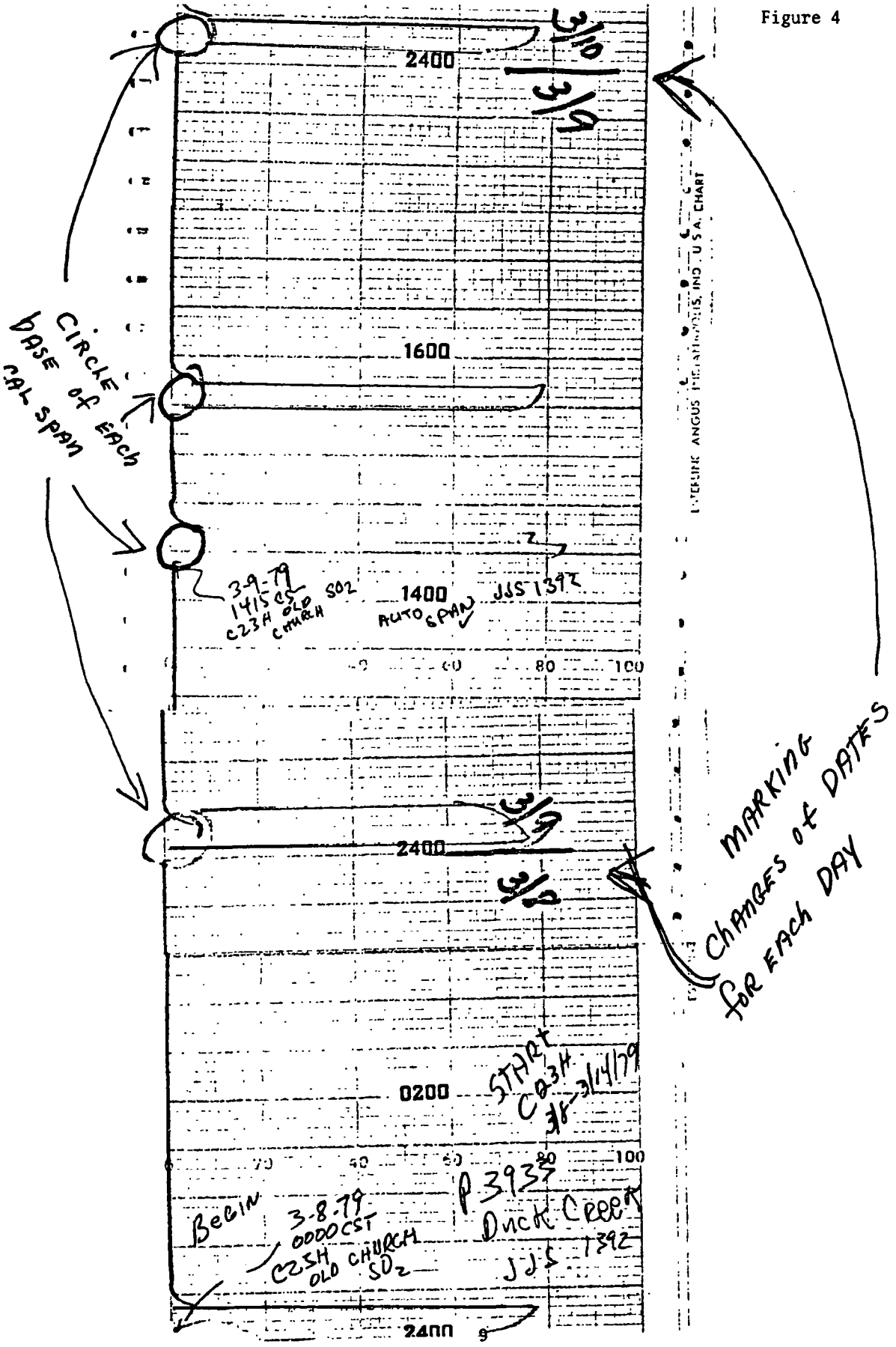

2400
3/10
3/9
1600
1400
3-9-79
1415 CST
C23H OLD CHURCH SO2
AUTO SPAN
JJS 1392
60
80
100
CIRCLE BASE of EACH CAL SPAN
MARKING CHANGES of DATES FOR EACH DAY
3/9
2400
3/8
0200
START C23H 3/8-3/14/79
70
40
60
80
100
BEGIN
3-8-79
0000 CST
C23H OLD CHURCH SO2
P 3933
Duck Creek
JJS 1392
2400

Figure 7

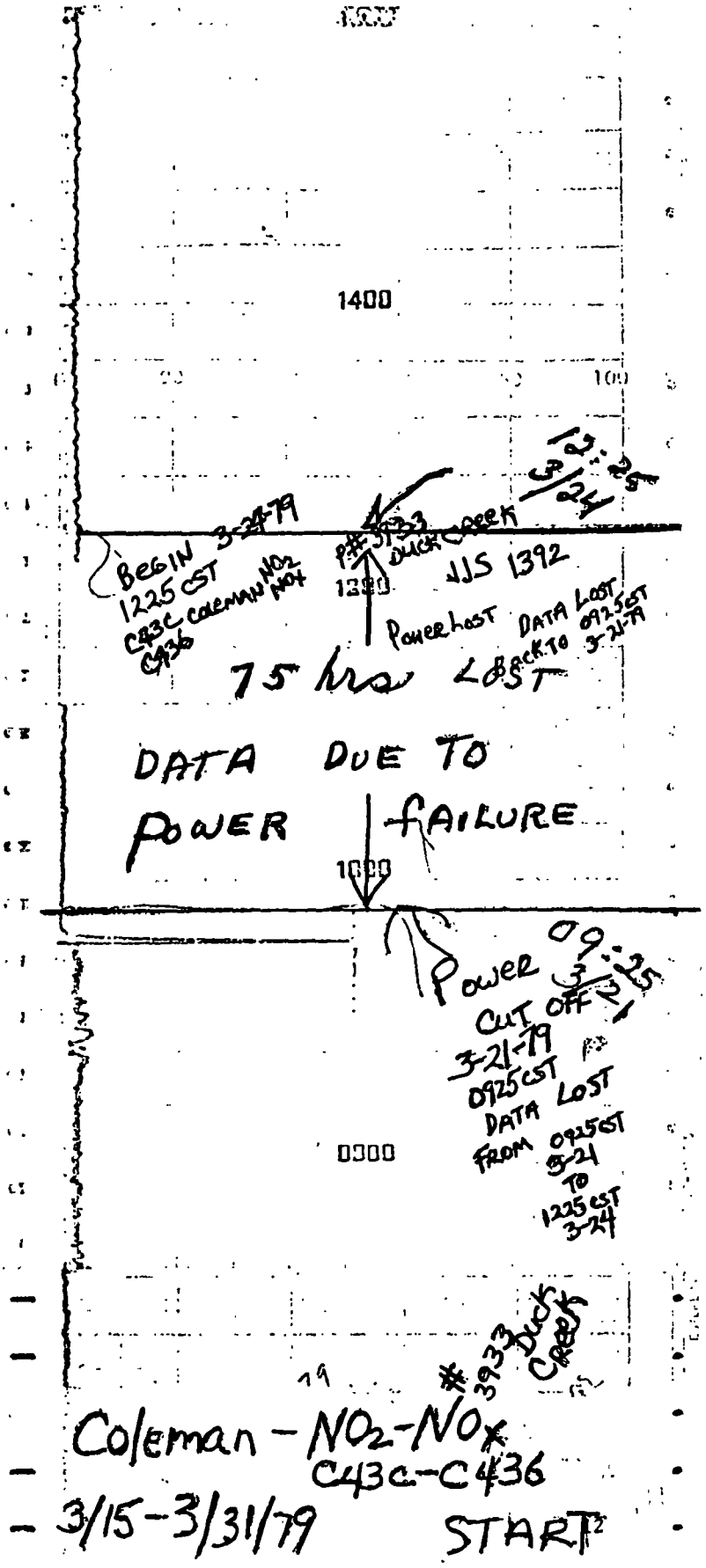
1400
100
12:25
3/24
BEGIN 3-24-79
1225 CST
C43C COLEMAN NO2 NOX
C436
P# 3933 DUCK CREEK
JJS 1392
1300
Power Lost
DATA LOST
BACK TO 0925 CST 3-21-79
75 hrs LOST
DATA DUE TO
POWER FAILURE
1000
Power 09:25 3/21
CUT OFF
3-21-79
0925 CST
DATA LOST
FROM 0925 CST 3-21
TO
1225 CST 3-24
0900
#3933 Duck Creek
Coleman - NO2-NOx
C43C-C436
3/15-3/31/79
START

STRIP CHART CODING FORM

Chart I.D. _____ *Chart Range* _____ *units* _____ *ppm*

Inclusive Dates _____ *Chart Speed* _____ *Coder:* _____

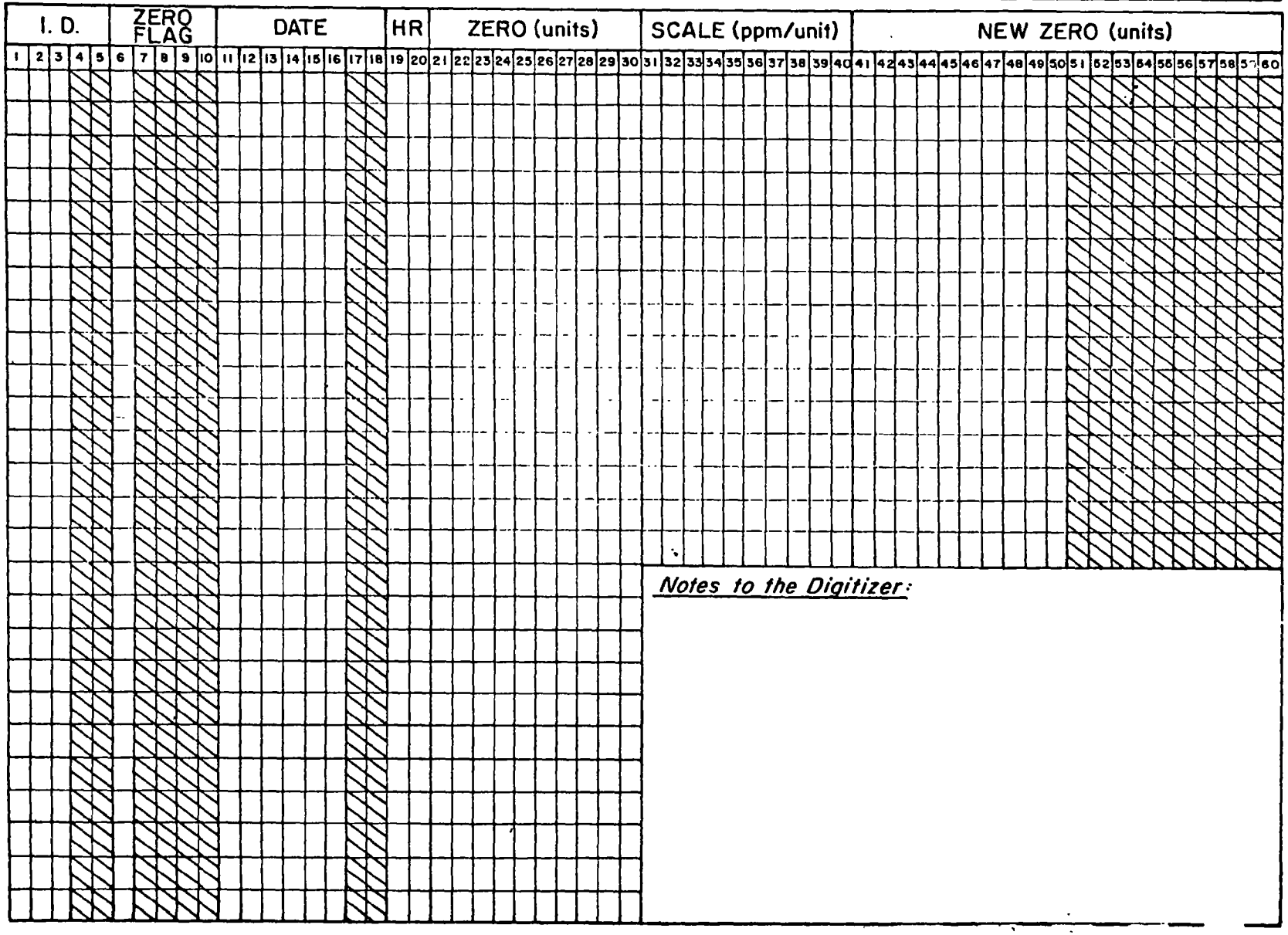

Figure 8

III. VALIDATION - GENERAL

1. Standard Operating Procedures for Validation of Data (See Appendix A SOP 19)

2. Review of Field Assessment Sheets

Each field assessment sheet and daily log sheets filled out by the field technician upon each visit to a particular site, should be read carefully to note all significant events which may have affected the operation of the sensors, and ultimately the quality of the data being collected. The assessment sheets should be checked to verify a particular sensor's serial number to verify that the sensor has not been removed by the field technician. Also on the assessment sheets the field technician should be writing the designated daily span values. Upon knowing the designated spans one can determine whether the sensor is responding to a known concentration accurately. The allowable deviation from the designated span values is $\pm$15% after which if spans continue to be out of this range some corrective action should be taken by the field technician.

On the right side of each assessment sheet the field technician must make an evaluation of the data during the past week. The technician will label the data as Valid, Suspect, or No Good. All suspect and no good data must be examined to determine whether the data should be kept as valid data or thrown out as invalid data.

3. All significant events noted in the field log sheets having an effect on the sensor's output should be documented along side the data. Examples of significant events are:

   3.1 Whenever a sensor is installed or removed.

   3.2 Anytime major maintenance is performed on the sensor or a significant part of the sensor is removed.

   3.3 Anytime data must be invalidated, an explanation of why the data is bad must be documented along side the data.

   3.4 All spans whether they are the daily auto spans or the weekly manual spans should be documented along with the designated span values. If the designated span values change, this should be documented.

3.5 All dates of multipoint calibrations should be documented along with the results of the calibrations.

3.6 The serial numbers of all sensors should be documented on the data listings.

3.7 The date of the most recent calibration or the date the sensor was installed which ever is most recent, should be documented on the data listings.

3.8 Whenever there are problems within the shelter which may have an affect on the sensor, such as an air conditioner problem which may allow the temperature within the the shelter to become extremely high or other problems which may affect the sensors, this should be noted.

3.9 In summary, all problems with sensors which may cause invalidation of data monitored, should be documented and all significant information which helps justify data validation (i.e. calibration results, etc.) should be documented on the data listings.

IV. VALIDATION - USE OF CALIBRATION DATA

1. There are generally two types of calibrator used in the field, a permeation tube calibrator and a gas phase titration calibrator. Both calibrators are capable of doing calibrations at four or five points along the range of the sensors. By determining a sensor's output at four or five points, one can see non-linearity and other significant deviations in a sensor's output. The calibration system is set up in order that the sensor be kept as close as possible to the designated concentrations produced by the calibrators. When a sensor's output differs by more than $\pm$10% from the designated concentrations, the sensor must be adjusted in order to bring it closer to specifications.

2. Examples of Field Mulitpoint Calibration Results.

   2.1 A & B - Examples of Teco 43 SO_2 Analyzer Calibrations

Figure 2.1A

EQB

Network Summit County Site S-2 Instrument Type Teco 43 S/N 7249-90 Date 5/22/79

Calibrator: Type Teco 143 S/N SAC7270-90-5 Last Cal Date _____ Temp: Des _____ °C Obs _____ °C

DVM: Mfg and Model Fluke 8020 A S/N 0927221 Last Cal Date 12/14/78

Complete where Applicable: Initial: zero pot _____ span pot _____

Final: zero pot _____ span pot _____

Rotameter ~~Flow~~ Setting	Flow (ℓ/min)	Input Concentrations V_D (0-10V)	Input Concentrations PPM_D (D)*	Unadjusted Readings (Obs) V_O (0-10V)	Unadjusted Readings (Obs) PPM_O (O)*	~~Adjusted Readings (Obs)~~ V	~~Adjusted Readings (Obs)~~ PPM_O (O)*	Adjusted Readings (Obs) V	Adjusted Readings (Obs) PPM_O (O)*	Δ%* (≤ 10%)
Zero Air			0±.005							
St. 13.90		0.60	.060	0.52	.052	→ -13.3 %		0.58	.058	-3.3%
St. 8.60		1.00	.100	0.90	.090	→ -10.0 %		0.99	.099	-1.0%
GL 8.37		2.00	.200	—	—			2.02	.202	+1.0%
GL 6.07		3.00	.300	2.78	.278	→ -7.4 %		3.04	.304	+1.3%
GL 4.53		4.50	.450	—	—			4.55	.455	+1.1%

Δ% = -10.2% = Average initial % deviation

Final Avg. Δ% = -1 %

In-Station Calibrator S/N —

In-Station Calibrator Verification:

	Reference Calibrator			In-Station Calibrator				
	Flow Setting	Analyzer Response (D)* Volts	PPM	Flow Setting	Analyzer Response (O)* Volts	PPM	Δ%*	(≤±10%)
TP1								
TP2								

*Δ% = $\left[\frac{O-D}{D}\right]$ x 100

Signature: Field Tech

Q.C. Review _____

Accepted ☐ Rejected ☐

Figure 2.1B

EQB

Network AP+L Site 3-1 Instrument Type Teco 43 S/N 6623-57 Date 7/12/79

Calibrator: Type M-205 S/N — Last Cal Date — Temp: Des — °C Obs 0 °C

DVM: Mfg and Model Fluke 8000A S/N 75530 Last Cal Date 6/12/79

Complete where Applicable: Initial: zero pot — span pot —

Final: zero pot — span pot —

Rotameter ~~Flow~~ Setting	Flow (ℓ/min)	Input Concentrations V_D (0-10V)	Input Concentrations PPM_D (D)*	Unadjusted Readings (Obs) V_o (0-10V)	Unadjusted Readings (Obs) PPM_o (O)*	~~Adjusted Readings (Obs)~~ V	~~Adjusted Readings (Obs)~~ PPM_o (O)*	Adjusted Readings (Obs) V	Adjusted Readings (Obs) PPM_o (O)*	No adjustments were made $\Delta\%$* (≤ 10%)
Zero Air			0±.005							
3		1.0	0.00	1.0	0.00	—		1.0	0.00	
3		7.94	.347	7.70	.335	-3.4%		7.70	.335	-3.4%
4		6.02	.251	5.66	.233	-7.2%		5.66	.233	-7.2%
6		4.18	.159	4.07	.152	-4.4%		4.07	.152	-4.4%
10		2.80	.090	3.01	.100	+11.0%		3.01	.100	+11.0%
14		2.22	.061	2.32	.066	+8.2%		2.32	.066	+8.2%

$\bar{\Delta}\% = +0.84\%$ = Average initial % deviation

Final Avg. $\Delta\%$ = +0.84%

In-Station Calibrator S/N —

In-Station Calibrator Verification:

	Reference Calibrator			In-Station Calibrator				
	Flow Setting	Analyzer Response (D)* Volts	Analyzer Response (D)* PPM	Flow Setting	Analyzer Response (O)* Volts	Analyzer Response (O)* PPM	$\Delta\%$*	(≤±10%)
TP1								
TP2								

*$\Delta\% = \left[\frac{O-D}{D}\right] \times 100$

Signature: Field Tech

Q.C. Review —

Accepted ☐ Rejected ☐

2.2 A & B - Examples of Dasibi O_3 Analyzer Calibrations.

White Bluff
Wright #31
6-11-79

Figure 2.2A

Field Calibration Dasibi 1005 O3 Monitor

Network: WHITE BLUFF Station: WRIGHT

Operator: DKM 1254 Date: 6-11-79

S/N: 2062 ERT #: 20699

Internal Calibrator Ball Ht: 2

Reason for Calibration: PERIODIC

O3 Switch. Position	DES. PPM	DES. VOLT	OBS. PPM	OBS. VOLT	%Δ	FINAL PPM	FINAL VOLT
2/ON	.081	1.62	.076	1.52	-6.17		
3/ON	.188	3.76	.181	3.62	-3.72		
4/ON	.279	5.58	.280	5.58	+.36%		
5/ON	.360	7.20	.372	7.44	+3.33%		
6/ON	.433	8.66	.456	9.12	+5.31%		

Max. % Δ =

(If Δ > 10% Report to Supervisor)

Comment:

White Bluff
Wright #3+

Figure 2.2B

Field Calibration Dasibi 1003 O3 Monitor

Network: WHITE BLUFF Station: WRIGHT

Operator: DKM 1254 Date: 7-12-79

S/N: 2062 ERT #: 20699

Internal Calibrator Ball Ht: 2

Reason for Calibration:

O3 Switch. Position	DES. PPM	DES. VOLT	OBS. PPM	OBS. VOLT	%Δ	FINAL PPM	FINAL VOLT
2/ON	.081	1.62	.075		-7.4%		
3/ON	.188	3.76	.176		-6.38%		
4/ON	.279	5.58	.268		-3.94%		
5/ON	.360	7.20	.352		-2.27%		
6/ON	.433	8.66	.428		-1.15%		

Max. % Δ =

(If Δ > 10% Report to Supervisor)

Comment:

3. Applying Results of Calibrations.

3.1 The following criteria are currently being used by ERT to validate all all quality data. The criteria explained are the criteria used based on field or pre- overhaul laboratory calibration results.

3.1.1 If a sensor is found to be with ±15% of designated values, all prior data (back to either when the sensor was installed or the last multipoint calibration, whichever occured most recently) will be accepted as valid data with no qualification needed.

3.1.2 If a sensor is found to be out of calibration by more than ±15% but less than ± 40%, an attempt can be made to correct or adjust prior data in order to bring it within the ±15% validation guideline.

In order to adjust any data, a definite starting point must be determined using daily spans, manual spans, significant sensor adjustments or malfunctions, etc.).

If no definite starting point can be determined, all prior data, back to either the last multipoint calibration, the sensor installation or a point at which the daily auto spans drop out of specs., will be qualified based on the calibration results.

3.1.3 When a sensor is found to be out of calibration by more than ±40% no attempt will be made to correct the data. In some cases a qualifying memo will be sent with the data, but in other cases where the sensor is grossly out of specs, data will be discarded (999).

3.1.4 The above criteria are very general and much research must go into each case to determine when or when not to adjust and discard data.

4. Examples of Multipoint Calibration to Interpret

4.1 Teco 43 calibration

4.2 Teco 43 calibration

4.3 Teco 43 calibration

5. Interpretation of Calibration in Item 4 above as done by ERT.

5.1 Teco 43 calibration

5.2 Teco 43 calibration

5.3 Teco 43 calibration

Figure 4-1

EQB

Network Summit County Site S-7 Instrument Type Teco 43 S/N 7241-90 Date 5/15/79

Calibrator: Type Teco 143 S/N SPC 7271-90-5 Last Cal Date _____ Temp: Des _____ °C Obs _____ °C

DVM: Mfg and Model Fluke 8020 A S/N 0927221 Last Cal Date 12/14/78

Complete where Applicable: Initial: zero pot _____ span pot _____

Final: zero pot _____ span pot _____

Rotameter ~~Flow~~ Setting	Flow (ℓ/min)	Input Concentrations V_D (0-10V)	Input Concentrations PPM_D (D)*	Unadjusted Readings (Obs) V_o (0-10V)	Unadjusted Readings (Obs) PPM_o (O)*	~~Adjusted Readings (Obs)~~ % Deviations ~~V~~	~~PPM_o (O)*~~	Adjusted Readings (Obs) V	Adjusted Readings (Obs) PPM_o (O)*	Δ%* (≤ 10%)
Zero Air			0±.005							
st 12.50		1.30	.065	1.06				1.26	.063	
St. 8.70		2.00	.100	1.66				1.96	.098	
GL 8.49		4.00	.200	—	—	—		3.94	.197	
GL 6.09		6.00	.300	5.26				6.08	.304	
GL 4.50		9.00	.450	—	—	—		9.20	.460	

In-Station Calibrator S/N _____

Final Avg. Δ% =

In-Station Calibrator Verification:

	Reference Calibrator			In-Station Calibrator				
	Flow Setting	Analyzer Response (D)* Volts	Analyzer Response (D)* PPM	Flow Setting	Analyzer Response (O)* Volts	Analyzer Response (O)* PPM	Δ%*	(≤±10%)
TP1								
TP2								

*Δ% = $\left[\frac{O-D}{D}\right]$ x 100

Signature: Field Tech

Q.C. Review _____

Accepted ☐ Rejected ☐

EQB

Figure 4-2

Network Summit County Site S-4 Instrument Type Teco 43 S/N 7245-90 Date 5/29/79

Calibrator: Type Teco 143 S/N SPC 7356-90-5 Last Cal Date _____ Temp: Des _____ °C Obs _____ °C

DVM: Mfg and Model Fluke 8020 A S/N 0927221 Last Cal Date 12/14/78

Complete where Applicable: Initial: zero pot _____ span pot _____

Final: zero pot _____ span pot _____

~~Rotameter~~ ~~Flow~~ Setting	Flow (ℓ/min)	Input Concentrations V_D (0-10V)	Input Concentrations PPM_D (D)*	Unadjusted Readings (Obs) V_O (0-10V)	Unadjusted Readings (Obs) PPM_O (O)*	~~Adjusted Readings (Obs)~~ % Deviations V	~~Adjusted Readings (Obs)~~ % Deviations ~~PPM_O (O)*~~	Adjusted Readings (Obs) V	Adjusted Readings (Obs) PPM_O (O)*	Δ%* (≤ 10%)
Zero Air			0±.005							
—	—	0	0	0	0			0	0	
St 12.30		1.30	.065	1.06				1.30	.065	
St. 8.50		2.00	.100	1.66				2.02	.101	
GL 8.27		4.00	.200	—	—	—		4.08	.204	
GL 6.10		6.00	.300	5.00				6.06	.303	
GL 4.55		9.00	.450	—	—	—		9.17	.459	

Final Avg. Δ% =

In-Station Calibrator S/N _____

In-Station Calibrator Verification:

	Reference Calibrator			In-Station Calibrator				
	Flow Setting	Analyzer Response (D)* Volts	Analyzer Response (D)* PPM	Flow Setting	Analyzer Response (O)* Volts	Analyzer Response (O)* PPM	Δ%*	(≤±10%)
TP1								

*Δ% = $\left[\frac{O-D}{D}\right]$ x 100

Signature: Field Tech

Q.C. Review _____

Accepted ☐ Rejected ☐

Figure 4-3

EQB

Network Harbor Beach Site Ruth Instrument Type Teco 43 S/N 7244-90 Date 3/7/79

Calibrator: Type ML 8500 S/N 4913 Last Cal Date _____ Temp: Des _____ °C Obs _____ °C

DVM: Mfg and Model TEK Mod. 213 S/N B043421 Last Cal Date 3/2/79

Complete where Applicable: Initial: zero pot _____ span pot _____

Final: zero pot _____ span pot _____

Potentiometer ~~Flow~~ Setting	Flow (ℓ/min)	Input Concentrations V_D (0-10V)	Input Concentrations PPM_D (D)*	Unadjusted Readings (Obs) V_o (0-10V)	Unadjusted Readings (Obs) PPM_o (O)*	~~Adjusted Readings (Obs)~~ % Deviations ~~V~~	~~PPM_o (O)*~~	Adjusted Readings (Obs) V	Adjusted Readings (Obs) PPM_o (O)*	Δ%* (≤ 10%)
Zero Air			0±.005							
Low 8.20		1.00	.050	.80	.040			1.10	.055	
Low 4.20		2.00	.100	1.56	.078			2.17	.108	
High 8.25		4.00	.200	3.01	.151			4.43	.222	
High 5.75		6.00	.300	4.38	.219					
High 4.40		9.00	.450	5.84	.292					

In-Station Calibrator S/N _____

Avg. Δ% =

In-Station Calibrator Verification:

	Reference Calibrator			In-Station Calibrator				
	Flow Setting	Analyzer Response (D)* Volts	Analyzer Response (D)* PPM	Flow Setting	Analyzer Response (O)* Volts	Analyzer Response (O)* PPM	Δ%*	(≤±10%)
TP1								
TP2								

*Δ% = $\left[\frac{O-D}{D}\right]$ x 100

Signature: Field Tech

Q.C. Review _____

Accepted ☐ Rejected ☐

Figure 5-1

EQB

Network Summit County Site S-7 Instrument Type Teco 43 S/N 7241-90 Date 5/15/79

Calibrator: Type Teco 143 S/N SPC 7271-90-5 Last Cal Date _____ Temp: Des _____ °C Obs _____ °C

DVM: Mfg and Model Fluke 8020 A S/N 0927221 Last Cal Date 12/14/78

Complete where Applicable: Initial: zero pot _____ span pot _____

Final: zero pot _____ span pot _____

Rotameter ~~Flow~~ Setting	Flow (ℓ/min)	Input Concentrations V_D (0-10V)	Input Concentrations PPM_D (D)*	Unadjusted Readings (Obs) V_O (0-10V)	Unadjusted Readings (Obs) PPM_O (O)*	~~Adjusted Readings (Obs)~~ V	~~Adjusted Readings (Obs)~~ PPM_O (O)*	Adjusted Readings (Obs) V	Adjusted Readings (Obs) PPM_O (O)*	Δ%* (≤ 10%)
Zero Air			0±.005							
	—	0	0	0	0	0		0	0	0
St 12.50		1.30	.065	1.06	.053	-18.4%		1.26	.063	-3.1%
St 8.70		2.00	.100	1.66	.083	-17.0%		1.96	.098	-2.0%
GL 8.49		4.00	.200	—	—			3.94	.197	-1.5%
GL 6.09		6.00	.300	5.26	.263	-12.3%		6.08	.304	+1.3%
GL 4.50		9.00	.450	—	—			9.20	.460	+2.2%
						$\bar{\Delta}\% = -15.9\%$ = Average initial % deviation			Final Avg. Δ% =	-0.6%

In-Station Calibrator S/N _____

In-Station Calibrator Verification:

	Reference Calibrator			In-Station Calibrator				
	Flow Setting	Analyzer Response (D)* Volts	Analyzer Response (D)* PPM	Flow Setting	Analyzer Response (O)* Volts	Analyzer Response (O)* PPM	Δ%*	(≤±10%)
TP1								
TP2								

*Δ% = $\left[\frac{O-D}{D}\right]$ x 100

Signature: Field Tech

Q.C. Review _____

Accepted ☐ Rejected ☐

ENVIRONMENTAL RESEARCH & TECHNOLOGY INC

MEMORANDUM

TO: J. Capobianco

MEMO NO.: 79-7-3618

FROM: Raymond C. Porter

FILE:

SUBJECT: Summit County, Patterson Park (573H) Teco 43 #7271-90

DATE: July 13, 1979

On May 15, 1979 a multipoint calibration was done which found the sensor 16% low. The spans from the time of the last multipoint on March 9, 1979 have been in specs until May 12, 1979 when they dropped low and out of specs. Thus the data from May 12, 1979 to May 15, 1979 will be qualified as being 16% low.

RCP/jlc

cc: W. McKinnon
L. Gendron
S. April
S. Nock
C. Locke
T. Gordon

Figure 5-2

EQB

Network Summit County Site S-4 Instrument Type Teco 43 S/N 7245-90 Date 5/29/79

Calibrator: Type Teco 143 S/N SPC 7356 90-5 Last Cal Date _____ Temp: Des _____ °C Obs _____ °C

DVM: Mfg and Model Fluke 8020A S/N 0927221 Last Cal Date 12/14/78

Complete where Applicable: Initial: zero pot _____ span pot _____

Final: zero pot _____ span pot _____

Rotameter ~~Flow~~ Setting	Flow (ℓ/min)	Input Concentrations V_D (0-10V)	Input Concentrations PPM_D (D)*	Unadjusted Readings (Obs) V_o (0-10V)	Unadjusted Readings (Obs) PPM_o (O)*	~~Adjusted Readings (Obs)~~ V	~~Adjusted Readings (Obs)~~ PPM_o (O)*	Adjusted Readings (Obs) V	Adjusted Readings (Obs) PPM_o (O)*	Δ%* (≤ 10%)
Zero Air			0±.005							
—	—	0	0	0	0	0		0	0	0
St 12.30		1.30	.065	1.06	.053	-18.4%		1.30	.065	0
St 8.50		2.00	.100	1.66	.083	-17.0%		2.02	.101	+1.0
GL 8.27		4.00	.200	—	—	—		4.08	.204	+2.0
GL 6.10		6.00	.300	5.00	.250	-16.7%		6.06	.303	+1.0
GL 4.55		9.00	.450	—	—	—		9.17	.459	+1.9
						Δ% = -17.4% = Average initial % deviation				

Final Avg. Δ% = +1.5%

In-Station Calibrator S/N _____

In-Station Calibrator Verification:

	Reference Calibrator			In-Station Calibrator				
	Flow Setting	Analyzer Response (D)* Volts	Analyzer Response (D)* PPM	Flow Setting	Analyzer Response (O)* Volts	Analyzer Response (O)* PPM	Δ%*	(≤±10%)
TP1								
TP2								

*Δ% = $\left[\frac{O - D}{D}\right]$ x 100

Signature: Field Tech

Q.C. Review _____

Accepted ☐ Rejected ☐

MEMORANDUM

TO: J. Capobianco

MEMO NO.: 7907-3618

FROM: Raymond C. Porter

FILE:

SUBJECT: Summit County, Gregory St. (543H)
Teco 43 #7245-90 SO_2 analyzer

DATE: July 13, 1979

On May 30, 1979 a multipoint calibration was done which found the sensor 17.4% low. The spans since the last multipoint on April 14, 1979 have been in specs until May 20, 1979 when they dropped low and out of specs. Thus the data from May 20, 1979 to May 30, 1979 will be qualified as being 17.4% low.

RCP/jlc

cc: W. McKinnon
L. Gendron
S. April
S. Nock
C. Locke
T. Gordon

Figure 5-3

EQB

Network Harbor Beach Site Ruth Instrument Type Teco 43 S/N 7244-90 Date 3/7/79

Calibrator: Type ML 8500 S/N 4913 Last Cal Date _____ Temp: Des _____ °C Obs _____ °C

DVM: Mfg and Model TeK. Mod. 213 S/N BP43421 Last Cal Date 3/2/79

Complete where Applicable: Initial: zero pot _____ span pot _____

Final: zero pot _____ span pot _____

~~Rotameter~~ ~~Flow~~ Setting	Flow (ℓ/min)	Input Concentrations V_D (0-10V)	Input Concentrations PPM_D (D)*	Unadjusted Readings (Obs) V_O (0-10V)	Unadjusted Readings (Obs) PPM_O (O)*	~~Adjusted Readings (Obs)~~ V	~~Adjusted Readings (Obs)~~ PPM_O (O)*	Adjusted Readings (Obs) V	Adjusted Readings (Obs) PPM_O (O)*	Δ%* (≤ 10%)
Zero Air			0±.005							
Low 8.20		1.00	.050	.80	.040		-20 %	1.10	.055	+10%
Low 4.20		2.00	.100	1.56	.078		-22 %	2.17	.108	+8%
High 8.25		4.00	.200	3.01	.151		-24.5%	4.43	.222	+11%
High 5.75		6.00	.300	4.38	.219		-27 %			
High 4.10		9.00	.450	5.84	.292		-35 %			
							Δ% = -25.7% = Average initial % deviation			

In-Station Calibrator S/N _____

Final Avg. Δ% = +9.6%

In-Station Calibrator Verification:

	Reference Calibrator Flow Setting	Reference Calibrator Analyzer Response (D)* Volts	Reference Calibrator Analyzer Response (D)* PPM	In-Station Calibrator Flow Setting	In-Station Calibrator Analyzer Response (O)* Volts	In-Station Calibrator Analyzer Response (O)* PPM	Δ%* (≤±10%)
TP1							
TP2							

*Δ% = $\left[\frac{O-D}{D}\right]$ x 100

Signature: Field Tech

Q.C. Review _____

Accepted ☐ Rejected ☐

ERT
ENVIRONMENTAL RESEARCH & TECHNOLOGY, INC

MEMORANDUM

TO: T. Schoen

MEMO NO.:

FROM: L. Gendron

FILE:

SUBJECT: Harbor Beach; Ruth (1) SO_2 Data

DATE: July 5, 1979

A multipoint calibration was performed on the Teco 43 SO_2 sensor at Ruth (1) on March 7, 1979 and found the sensor to be 26% low. A previous audit on February 20, 1979 also found the sensor to be 26% low at that time. All spans since the last calibration on November 19, 1978 had been consistently low, but due to the fact that the tech adjusted the ball heights on December 1, 1978 all spans can not be used to accurately determine the sensor's output. Thus, all data from the last calibration on November 19, 1978 until the calibration on March 7, 1979 should be qualified as possibly being as much as 26% low.

LG/jlc

cc: W. McKinnon
S. April
S. Nock
C. DeFillippo

APPENDIX A

STANDARD OPERATING PROCEDURE

Title:

Date: July 24, 1979
Number: 015
Revision: 0

TECO 43 DATA REDUCTION AND VALIDATION-DRAFT

Prepared by

ENVIRONMENTAL RESEARCH & TECHNOLOGY, INC.
for the Puerto Rico Environmental Quality Board
under Contract No. 68-02-2542

STANDARD OPERATING PROCEDURE

Title: Teco 43 Data Reduction and Validation-Draft

Date: July 24, 1979
Number: 015
Revision:

1. General/Responsibility

1.1 Sulfur dioxide (SO_2) is a by-product of the burning of fossil fuels and one of the contributors to air pollution in the vicinity of industrial facilities. The SO_2 analyzer used in the ERT installed EQB network is the Thermo-Electron Model 43.

1.2 Data Modes and Formats

1.2.1 The voltage output of the Thermo-Electron Model 43 is linear with respect to the sampled concentration of SO_2 and is calibrated in parts per million (ppm) of SO_2.

1.2.2 The instrument output is usually recorded in an analog mode at the test site on a stripchart recorder, for example: Esterline Angus recorder with a 0-10 volt scale, where 10 volts equals 0.450 parts per million (ppm) when the instrument is set on the 0.5 ppm scale or 0.900 ppm when the instrument is set on the 1.0 ppm scale. The baseline is set at 1.0 volts and equals 0.000 ppm.

1.2.3 The digital programming format for Thermo-Electron SO_2 is .NNN; parameter code is 3H; units, parts per million (ppm).

1.3 The data processing section, has the data reduction responsibility. The network meteorologist has the validation responsibility.

2. Methods

2.1 All available data listings and correspondence should be obtained. These include stripcharts, field log sheets, and data listing, digitized stripchart data. Supporting documentation may also include telecons, trip reports, and multipoint calibration sheets.

2.2 Stripcharts should be examined for the following problems. If any problems have not been identified and acted upon by the field technician, a Problem Sensor Communication (ERT Form 1151) should be filled out and given to the supervisor.

2.2.1 Chart speed/time problems. Correct by using procedures defined in Section II of Training Manual.

2.2.2 Baseline falling outside of 1.0$\pm$ .2v. This should be brought to the attention of the supervisor for possible data correction.

STANDARD OPERATING PROCEDURE

Title: Teco 43 Data Reduction and Validation-Draft

Date: July 24, 1979
Number: 015
Revision:

2.2.3 Calibration span falling outside of ± 15% of the designated value. The designated span value may vary from instrument to instrument and can be obtained from the field station Log Sheet at the time of the last field multipoint calibration. Unstable performance of the instrument, characterized by drifting baseline and poor calibrations may be due to the high sensitivity of the Thermo-Electron SO_2 analyzer to moisture and particulate matter. Field station Logs and Data Assessment Sheets should be examined carefully for observations of such malfunctions.

2.2.3 Unusual chart traces, including, but not restricted to:

2.2.4.1 Steadily high or increasing values may mean shelter temperature is climbing beyond accurate instrument function level. If the field station log indicated air conditioner failure and shelter temperature is over 80°F, data for that time period might be invalid.

2.2.4.2 A long period of straight baseline (1.0v.) data can be clean air or an indication the analyzer was left in "zero" mode (not sampling ambient air hence data invalid). Check chart and field log for note to this effect, especially if other stations record high values.

2.2.4.3 The ultraviolet bulb that is central to the operation of the analyzer will occasionally burn out, resulting in a straight trace at the bottom of the chart (0% of full scale).

2.2.4.4 Data which apparently exceeds the range of the instrument (that is, the chart trace "pegged" at top of scale) may be retained, but must be documented on all outputs and brought to the attention of the supervisor.

2.2.4.5 Testing of equipment can result in a variety of unusual chart traces. These periods should be clearly marked on chart by the field technician. If the tests last for more than 40 minutes of a given hour, that hour is invalid.

2.3 When using data listings to edit data, the following procedures apply:

2.3.1 Verify that the data listing agrees with the stripchart by checking 8-10% of the hourly values (about two a day). The analyst will also check peak values of the month and, in any case, all values above .100 ppm.

In the case of digitized data, any discrepancies between the stripchart and data listing are due to errors in the digitizing process. Values on the data listing that differ from the stripchart by more than one chart unit should be replaced by a manually digitized value.

STANDARD OPERATING PROCEDURE

Title: Teco 43 Data Reduction and Validation-Draft

Date: July 24, 1979
Number: 015
Revision:

2.3.2 The final data listings should be documented with the following information:

-The observed values of all manual spans performed.
-The observed values for all all auto spans that are more than ±15% of designated values.
-The results of any multipoint calibrations performed should be attached.
-The reasons for missing hours.
-All suspect data. The network meteorologist will analyze each situation to determine the validity of the data. (See SOP 019)

3. Example

3.1 Thermo-Electron stripchart indicating calibration span and drifting baseline.

3.2 Problem Sensor Communication Form

4. Quality Assurance Audits

4.1 The Quality Assurance Officer shall conduct audits of the methods outlined in Section II. Corrective action shall be taken necessary.

2000
2200
2400
0200
0400
0600
0
20
40
60
80
100
ESTERLINE ANGUS INDIANAPOLIS IND. U.S.A.
MADE

Figure 3.1

Example 3.2

ERT
ONMENTAL RESEARCH & TECHNOLOGY, INC.

Problem Sensor Communication

To: Date_____

From: Data Processing

Con. Realtime ☐ Chi. Realtime ☐ Historical ☐ Other _____

Network ID_____ Network_____

Station_____ Parameter_____

Inclusive Dates_____ To_____ Instrument_____

Problem Definition_____

_____

_____

_____ Signed_____

Action Taken_____

_____

_____

By_____ Date_____ Problem Corrected As Of _____

STANDARD OPERATING PROCEDURE

Title:

Date: July 24, 1979
Number: 016
Revision:

BENDIX 8501 DATA REDUCTION AND VALIDATION-DRAFT

Prepared by

ENVIRONMENTAL RESEARCH & TECHNOLOGY, INC.
for the Puerto Rico Environmental Quality Board
under Contract No. 6802-2542

STANDARD OPERATING PROCEDURE

Title: Bendix 8501 Data Reduction and Validation-Draft

Date: July 24, 1979
Number: 016
Revision:

I. General/Responsibility

1.1 Carbon monoxide (CO) is a by-product of incomplete combustion. It is produced mostly by automobiles, but also by the burning of fossil fuels at industrial facilities. The CO analyzer used in the ERT installed EQB network is the Bendix Model 8501.

1.2 Data Modes and Formats

1.2.1 The voltage output of the Bendix CO monitor is linear with respect to the sampled concentration of CO.

1.2.2 The instrument output is usually recorded in an analog mode at the test site on a stripchart recorder, for example: A recorder with a 0-10 volt scale, where 10 volts equals 45.0 parts per million (ppm) when the instrument is set on the 50.0 ppm scale or 90.0 ppm when the instrument is set on the 100.0 ppm scale. The baseline is set at 1.0 volts and equals 00.0 ppm.

1.2.3 The digitizing programming format for Bendix CO is NN.N; parameters code is 34; units parts per million (ppm).

1.3 The data processing section has the data reduction responsibility. The network meteorologist has the validation responsibility.

II. Methods

2.1 All available data listings and correspondence should be obtained. These include stripcharts, field log sheets, and data listing of digitized stripchart data. Supporting documentation may also include telecons, trip reports, and multipoint calibration sheets.

2.2 Stripcharts should be examined for the following problems. If any problems have not been identified and acted upon by the filed technician, a Problem Sensor Communication (ERT Form 1151) should be filled out and given to the supervisor.

2.2.1 Chart speed/time problems. Correct by using procedures defined in Section II in Training Manual.

2.2.2 Baseline more than $\pm$ .2 volts out of designated (1.0 volt). This should be brought to the attention of the supervisor for possible data correction.

2.2.3 Calibration spans falling outside of $\pm$ 15% of the designated span. The designated span value can be obtained from the data assessment sheet or the last valid multipoint calibration sheet. Any periods for which the spans are not within these specifications should be noted on the data listing and reviewed by the meteorologist for possible data action.

2.2.4 Any long periods of straight data that may indicate a recorder problem or if the data is at the bottom of the scale (1.0v), the instrument may have been left in baseline mode (not sampling ambient air) or the infrared light source may have burnt out. These problems would invalidate the data for the time period involved.

STANDARD OPERATING PROCEDURE

Title: Bendix 8501 CO Data Reduction and Validation-Draft

Date: July 24, 1979
Number: Q16
Revision:

2.2.5 Data which apparently exceeds the range of the instrument (that the chart trace "pegged" at top of scale) may be retained but must be documented on all outputs and brought to the attention of the supervisor.

2.2.6 Testing of equipment can result in a variety of unusual chart traces. These periods should be clearly marked on the chart by the field technician. If the tests last for more than 40 minutes of a given hour, that hour is invalid.

2.3 When using data listings to edit data, the following procedures apply:

2.3.1 Verify that the data listing agrees with the stripchart by checking 8-10% of the hourly values (about two a day). The analyst will also check peak values of the month.

In the case of Digitized data, any discrepancies between the stripchart and data listing are due to errors in the digitizing process. Values on the data listing that differ from the stripchart by more than one chart unit should be replaced by a manually digitized value.

2.3.2 The final listings should be documented with the following information:

-The observed values of all manual spans performed.
-The observed values for all auto spans that are more than ±15% of designated values.
-The results of any multipoint calibrations performed should be attached.
-The reasons for missing hours.
-All suspect data. The network meteorologist will analyze each situation to determine the validity of the data. (See SOP 019)

III. Example

3.1 To be added during training session. (Normal trace from instrument)

3.2 Problem Sensor Communication Form

IV. Quality Assurance Audits

4.1 The Quality Assurance Officer shall conduct audits of the methods outlined in Section II. Corrective action shall be taken as necessary.

ERT
ENVIRONMENTAL RESEARCH & TECHNOLOGY, INC

Problem Sensor Communication

To: Date_____

From: Data Processing

Con. Realtime ☐ Chi. Realtime ☐ Historical ☐ Other _____

Network ID_____ Network_____

Station_____ Parameter_____

Inclusive Dates_____ To_____ Instrument_____

Problem Definition_____

_____

_____

_____ Signed_____

Action Taken_____

_____

_____

By_____ Date_____ Problem Corrected As Of _____

1-ADDRESSEE FILE COPY

ERT FORM

STANDARD OPERATING PROCEDURE

Title:

Date: July 24, 1979
Number: 017
Revision:

DASIBI DATA REDUCTION AND VALIDATION-DRAFT

Prepared by

ENVIRONMENTAL RESEARCH & TECHNOLOGY, INC.
for the Puerto Rico Environmental Quality Board
under Contract No. 68-02-2542

STANDARD OPERATING PROCEDURE

Title: Dasibi Ozone Data Reduction and Validation-Draft

Date: July 24, 1979
Number: 017
Revision:

I. General/Responsibility

1.1 Ozone (O_3), the main constituent of petro-chemical smog, is one product of the chemical reaction produced when certain auto emissions, hyrocarbons and oxides of nitrogen are exposed to sunlight.

One Ozone Monitor used in the ERT installed EQB network is the Dasibi Ultra-Violet (UV) Ozone Monitor, Model 1003. It is a self-contained instrument which measures gaseous ozone by UV absorption.

1.2 Data Modes and Formats

1.2.1 The voltage output of the Dasibi is linear with respect to the sampled concentration of O_3 and is calibrated in parts per million (ppm) of O_3.

1.2.2 The instrument output is recorded in an analog mode at the test site on a stripchart recorder, e.g: A recorder with a 0-10v scale where 10 volts equals .500 ppm. The baseline is set at 0.0v and equals 0.0 ppm + the instrument offset.

1.2.3 The digital programming format for the Dasibi O_3 is .NNN; parameters code is 3G; units, parts per million (ppm).

1.3 The data processing section, has the data reduction responsibility. The network meteorologist has the validation responsibility.

II. Method

2.1 All available data listing and correspondence should be obtained. These include stripcharts, field log sheets, and digitized stripchart data. Supporting documentation may also include telecons, trip reports, and multipoint calibration sheets.

2.2 Stripcharts should be examined for the following problems. If any problems have not been identified and acted upon by the field technician, a Problem Sensor Communication (ERT Form 1151) should be filled out and given to the Supervisor.

2.2.1 Chart speed/time problems. Correct by using procedures defined in Section II of Training Manual.

2.2.2 Dasibi Ozone monitors should not display a significant baseline drift. Drift of more than 1 chart unit 0.0 $\pm$ .2v should be brought to the attention of the supervisor for possible data correction.

2.2.3 The designated span of calibration depends on the network. A deviation of more than $\pm$ 15% by the observed span of calibration should be brought to the attention of Field Services by using a Problem Sensor Communication (ERT Form 1151). The Problem Sensor Communication should be given to the supervisor, who will forward it to the appropriate party. With the Dasibi Monitor, the calibration span well within specifications is a good indication of a properly functioning instrument.

STANDARD OPERATING PROCEDURE

Title: Dasibi Ozone Data Reduction and Validation-Draft

Date: July 24, 1979
Number: 017
Revision:

2.2.4 Over the course of a calendar year, the maximum hourly average concentrations of ozone should occur in the summer months, and usually during the middle of hot, sunny days.

2.2.5 Regardless of the time of year, maximum hourly concentrations for any given day should also primarily occur in the middle of the day.

2.2.6 Any prolonged period of data below .005 should be regarded as suspect and the meteorologist should be consulted.

2.2.7 Any discrepancies found should be noted on the data listing and on a Problem Sensor Communication (ERT Form 1151) to be given to supervisor. The Supervisor or Network Meteorologist will further investigate the problem.

2.3 When using data listings to edit data, the following procedures apply:

2.3.1 Verify that the data listing agrees with the stripchart by checking 8-10% of the hourly values (about two a day). The analyst will also check peak values of the month and, in any case, all values above .100 ppm.

In the case of Digitized data, any discrepancies between the stripchart and data listing are due to errors in the digitizing process. Values on the data listing that differ from the stripchart by more than one chart unit should be replaced by a manually digitized value.

2.3.2 The final data listings should be documented with the following information:

-The observed values of all manual spans performed.
-The observed values for all auto spans that are more than ± 15% of designated values.
-The results of any multipoint calibrations performed should be attached.
-The reasons for missing hours.
-All suspect data. The network meteorologist will analyze each situation to determine the validity of the data. (See SOP 019)

III. Example

3.1 Dasibi stripchart showing ideal functioning of instrument. (To be added.)

3.2 Problem Sensor Communication Form.

IV. Quality Assurance Audits

4.1 The Quality Assurance Officer shall conduct audits of the methods outlined in Section II. Corrective action will be taken as necessary.

ENVIRONMENTAL RESEARCH & TECHNOLOGY, INC.

Problem Sensor Communication

To: Date_____

From: Data Processing

Con. Realtime ☐ Chi. Realtime ☐ Historical ☐ Other _____

Network ID_____ Network_____

Station_____ Parameter_____

Inclusive Dates_____ To_____ Instrument_____

Problem Definition_____

_____

_____

_____ Signed_____

Action Taken_____

_____

_____

By_____ Date_____ Problem Corrected As Of _____

I-ADDRESSEE FILE COPY

ERT FORM II

STANDARD OPERATING PROCEDURE

Title:

Date: July 24, 1979
Number: 019
Revision:

DATA VALIDATION-DRAFT

Prepared by

ENVIRONMENTAL RESEARCH & TECHNOLOGY, INC.
for the Puerto Rico Environmental Quality Board
under Contract No. 68-02-2542

STANDARD OPERATING PROCEDURE

Title: Data Validation-Draft

Date: July 24, 1979
Number: 019
Revision:

1. GENERAL

1.1 Definition

A set of data representing the measurement of a specific physical quantity is defined to be valid if the instrument system appropriate for the project purposes is in normally good operating condition and is adjusted to conform to calibration specifications established for the particular contract.

1.2 Instrument System

Selection of the appropriate instrument system will have been determined and specified by an instrument system Project Engineer to satisfy project requirements. He will also assure that installation, calibrations, and operational procedures are adequate to maintain the required quality of measurement. Any exceptions to standards specified in current SOP's will be explicitly defined and documented by the Director of the Air Sampling Division.

1.3 Calibration Standards

It is generally required that the calibration system maintain a traceability to National Bureau of Standards reference sources. (Reference to CFR (40-58). Scheduled field calibration tests and instructions governing replacement or readjustment are covered by appropriate SOP.

1.4 Documentation

Complete records are considered essential to support all decisions regarding the quality and validity of data because of the possibility of formal review in legal proceedings or scientific conclusions.

1.5 Validation Process

Formal validation consists of a review of all evidence relating to conditions affecting data acquisition, instrument calibration, data processing, data correction, and data deletion. The data will be evaluated for reasonableness and consistency with other measurements. Records will be assessed for clarity and completeness. Valid data will be authorized for retention in the EQB data base, and the data lists released to the public will be formally stamped VALIDATED.

STANDARD OPERATING PROCEDURE

Title: Data Validation-Draft

Date: July 24, 1979
Number: 019
Revision:

1.6 SOP Applicability

This Data Validation procedure is applicable to the EQB/ERT installed 6 station where the primary responsibility for data validation is assigned to EQB Scientific Inventories and Reports Division.

2. REPONSIBILITIES

2.1 The Scientific Inventories and Reports Division Manager is responsible for the assignment of qualified personnel to process, edit, and validate field data from all projects assigned to the division and is responsible for technical review of the editing and validation actions.

2.2 An air quality meteorologist is generally assigned the responsiblity of validation. Exceptions to this rule may be made by the Scientific Inventories and Reports Division Manager for some types of instrumentation and special projects. The validator may seek consultation and advice from other qualified technical personnel but he must apply his own judgment on the validation decision.

2.3 The analyst responsible for processing and editing the data will provide written documentation describing conditions relating to data which is suspect, corrected, or voided due to instrument malfunction.

2.4 The responsibility for review of validation judgment and decisions moves upward through the direct supervisory and management hierarchy as defined by current organization charts.

3. INTERFACE WITH OTHER ORGANIZATIONAL ELEMENTS

3.1 The controlling interface for definition of project requirements is via the EQB director of Air Monitoring Division. As a general rule his instructions should be transmitted in written form or, if verbal, should be confirmed in writing. Instruction can include special tolerance limits for individual projects based upon requirements imposed by the clients and regulatory agencies.

3.2 Organizational elements responsible for calibration, maintenance, and operation of the project instrumentation system will transmit data to Scientific Inventories and Reports Division along with pertinent and required forms, instrument logs, and calibration data. They will respond to requests from this division for additional information required to support validation.

3.3 Engineering and instrument quality personnel will be consulted as necessary for technical information and advice concerning instrumentation performance.

STANDARD OPERATING PROCEDURE

Title: Data Validation - Draft

Date: July 24, 1979
Number: 019
Revision:

4. METHOD

Since validation is the product of the review and technical judgment of the validating meteorologist, the method consists of guidelines rather than a series of rigid steps. Characteristics pertaining to specific parameters or specific instruments are described in those applicable SOP's

4.1 The validator should be cognizant of the purpose and requirements of the specific project for which the data is being presented.

4.2 The validator should review the instrument calibration records for schedule, completeness and conclusions. Daily span calibrations should be reviewed on applicable instruments.

4.3 The validator should review and assess all information noted by the data analyst on the data lists.

4.4 The validator should review stripcharts, field log sheets, and data assessment sheets to evaluate instrument operation for all suspect data periods.

4.5 The validator can check reasonability of some parameters by comparing data with that form nearby National Weather Service stations or other data sites.

4.6 The validator may consult with engineering or instrument quality personnel to help resolve questionable instrumentation performance.

4.7 Data should be voided only if there is convincing evidence that it is not valid.

4.8 Corrections are applied to data only if there is convincing technical justification that there was an instrumentation system bias. The basis for correction should be fully documented.

4.9 The validator should document on the final data list all pertinent information which supports his judgement regarding the validity of the data.

4.10 If an air quality instrument is operating properly and calibration data show output of $\pm$ 15%, the data can be validated without qualification. If the instrument calibration is outside the 15% value, the data may be validated with the qualification recorded on the final data listing.

4.11 Each validated data listing will be stamped with a validation seal and will be dated and initialed by the validator and data analyst responsible for the determination. This should only be accomplished after all deletions and changes have been made as shown by comparison with a data list. The final data list will also be stamped and initialed.

STANDARD OPERATING PROCEDURE

Title: Data Validation - Draft

Date: July 24, 1979
Number: 019
Revision:

5. QUALITY ASSURANCE AUDITS

5.1 The Quality Assurance Officer shall conduct audits of the methods outlined in Section 4. Corrective action will be taken as necessary.

Appendix G
to the Final Report

Audit Report

ENVIRONMENTAL RESEARCH & TECHNOLOGY, INC

MEMORANDUM

TO: DISTRIBUTION

MEMO NO.: 079ENG-285

FROM: A. Sacco

FILE:

SUBJECT: Audit of EQB/ERT Monitoring Network

DATE: 10/23/79

During the week of October 15-19, 1979, I conducted a performance Audit of the Ambient Air Monitoring Network established by ERT for the Puerto Rico Environmental Quality Board (EQB) through a basic ordering agreement with Region II of the US Environmental Protection Agency (EPA).

EQUIPMENT - A Thermo Electron (TECO) Model 143 Permeation Tube Calibrator S/N 7529-93 employing a 5 cm SO_2 NBS permeation tube S/N48-31 was used to generate the audit concentrations of SO_2. CO was generated by volumetric dilution of a vendor certified tank of CO in air (508 ppm). Dilution was provided by bottled air located at the site and both air and CO flows were metered by means of an ERT Mass Flow Controller Dilution System, S/N 1101G. O_3 concentrations were generated by means of an ERT built O_3 generator 1106T, which had been previously verified against the ERT laboratory standard UV photometer. This unit was employed in conjunction with the dilution system 1101G and an ERT built zero air system to provide various O_3 concentrations.

Hi Vols were calibrated using a standard calibrated orifice S/N 3092 in conjunction with a series of five resistance plates.

A meeting was held at the EQB laboratory on October 16, 1979, to discuss the conduct of the audit. Present at the meeting were the following:

Joseph Spittola	-	USEPA Region II
Nelson Moreno	-	PR-EQB
Israel Matos	-	PR-EQB
Hector Diaz	-	ERT
Anthony Sacco	-	ERT

It was decided that we would perform Audits at sites #7 (SO_2), #9 (CO), and #12 (O_3) on October 16. We would finish the north shore sites of #19 (SO_2) and #27 (SO_2) on October 17 and finish with audits of the South shore #15 (SO_2), TSP and #14 TSP on October 18. During the October 16 audit, I was accompanied by J. Spittola, Casto Velazquez-US-EPA-SJ, H. Diaz, and I. Matos. On October 17 I was accompanied by J. Spittola, Oswaldo Vazquez-EQB Field Technician, and I. Matos. On October 18, I was accompanied by I. Matos and William Alicea-EQB Electrical Field Technician.

RESULTS: Table 1 indicates a summary of the audit results (note that Hi Vols were calibrated and not audited). Attached to this report are copies of the data sheets associated with each analyzer audit. The network is operating well and is being attended with sufficient frequency and the performance audit results indicate that analyzers are operating well. There is a fine working relationship between EQB and the ERT representative H. Diaz. I enjoyed excellent cooperation with all EQB personnel.

Although the program has started well, there are several areas which indicated potential problems.

- Most of the sites suffer from some form of moisture condensation within the inlet probe system. The Bayaman site, #19, was the worst. At this site there was water all through the inlet line to the TECO 43, even on the particulate filter. There are several suggested actions which can alleviate this problem. The simplest action requires careful wrapping of all inlet lines with an insulating material. In conjunction with this, the shelter thermostat may be raised slightly so that the environmental temperature is above the dew point most of the time. This can be tricky where a calibrator such as the TECO 143 Permeation System is used, since it employes a 30°C oven and requires a Delta T of 5°C to operate efficiently. If these things fail to solve the condensation, it may be necessary to shorten the inlet Teflon probe leading to the glass manifold so that there is a minimum length of sample probe inside the shelter.

- The network is plagued by power interruptions which cause data problems. While there isn't much we can do about power problems, we can make them easier to identify. The Esterline Angus Miniservo Recorder which is in use at all the SO_2 sites and the O_3 site as well, has a standard rechargeable battery pak option (about $150) which can operate the recorder for at least 8 hours. I suggest that installation of this option be implemented to improve the efficiency of data processing.

- Span checks are performed on a weekly basis. If there is a problem where an analyzer span is found out of tolerance, a week of data may be invalidated. Each of the SO_2 Analyzers is equipped with the necessary valves to accomodate an automatic zero and span cycle. The expense associated with implementing auto zero/span cycles requires the purchase of timers and relays. The cost is probably less than $200 per unit and it improves the potential for quality data.

- The San Juan CO site #9 is too close to the roadway for valid sampling. It is approximately 10 meters from the road and should be at least twice that. The inlet probe appears to be higher than the $3\pm1/2$ meters required also. This site should be moved to a better location. It does not appear that it can be conveniently moved further back at the present site without being impacted by other obstructions.

- Since the equipment in this network is relatively new, there has not been much problem with spare parts, but indications are that this could be a significant problem in the future. A complete stock of spare components (a one year supply) should be made available and updated as used.

- Documentation at the sites is adequately performed, but the mechanics of this phase of the operation is cumbersome. The daily log sheets and assesment sheets are completed with an original and two loose carbon copies. This is a pain in the neck at least. The forms should be printed on multiple NCR stock for more convenience. There is also no convenient filing place for these forms at each site. This will be a real mess before too long. It would be advisable to start a three ring binder for this purpose at each site where all documentation, including calibration sheets could be easily stored.

- The problem of personnel turnover within the EQB is the largest single factor which could be a determinant to the continued efficient operation of this network. It is not sufficient to rely upon exsisting technicians to train new people since this tends to dilute the effort after a period of time. A comprehensive training program must be established either by outside contract or by using EQB people who are expressly trained for this task.

- Although there is a Quality Assurance Program associated with this network, it was devised as a guideline document and EQB is under no obligation to implement it. This plan does not include all areas of concern in this network specifically high volume samplers etc. EQB should either adopt/modity the current plan or develop a plan.

- Although there is not much data to validate as yet, there seems to be a lack of staff for this function. At the present time there is only one person actively involved in this task. There is a requirement for at least a meteorologist to validate data.

- The current operation is adequately serviced without laboratory calibration standards, but in the near future the expanded network will require at least a standard for SO_2.

Tony

Anthony Sacco

AS/ch

Distribution:

J. Kruse
E. Fasci
A. Costales
J. Wilbur
K. Detore
S. Whittimore
H. Diaz-Puerto Rico

Attachments

TABLE 1

EQB/ERT MONITORING SITES

SITE Name	SITE No.	Parameter(s)	Date of Last Span Adjust	Delta %	Monitoring Equipment
Guaynabo	7	SO_2	9/27/79	-7.3	Teco 43-Pulsed Fluorescence
San Juan	9	CO	10/10/79	-6.8	Bendix-NDIR
Toa Baja	12	O_3	(2)	+1.2	Dasibi-UV Photometry
Bayamon	19	SO_2	10/10/79	+2.4	TECO 43 Pulsed Fluorescence
Levitown	27	SO_2	10/15/79	-3.1	TECO 43 Pulsed Fluorescence
Guayama	15	SO_2, TSP	9/21/79 N/A	-5.2 (1)	TECO 43 Pulsed Fl. Sierra Hi Volume Sampler
Guanica	14	TSP	N/A	(1)	Sierra Hi Volume Sampler

(1) Calibrations were performed at the two Hi Vol sites since these sites were newly installed and had not been previously calibrated.

(2) This analyzer had been set up according to factory specified span values and had not been previously challenged with an independent O_3 reference source.

(3) This analyzer had just been installed at the site on 10/15/79.

ERT #15

Network FOB/ERT Site GUAYAMA Instrument Type TECO 43 S/N 8689-101 Date 10-18-79

Calibrator: Type TECO 142 S/N 7529-93 Last Cal Date 8-21-79 Temp: Des 30 °C Obs 30 °C

DVM: Mfg and Model FLUKE 8020A S/N 0670547 Last Cal Date 10-1-79

Complete where Applicable: Initial: zero pot 327 span pot 635 AUDITONLY

Final: zero pot _____ span pot _____

Flow Setting	Flow (ℓ/min)	Input Concentrations V_D (0-10V)	Input Concentrations PPM_D (D)*	Unadjusted Readings (Obs) V_o (0-10V)	Unadjusted Readings (Obs) PPM_o (O)*	Adjusted Readings (Obs) V	Adjusted Readings (Obs) PPM_o (O)*	Adjusted Readings (Obs) V	Adjusted Readings (Obs) PPM_o (O)*	Δ%* (≤ 10%)
Zero Air			0±.005							
	zero	0.00	0.00	-.01	-.0005					
4.7(6)	1.78	8.00	0.40	7.79	0.389					-2.75
9.85(6)	4.75	3.00	0.15	2.83	0.142					-5.3
9.6(5)	5.91	1.6	0.08	1.48	0.074					-7.5

In-Station Calibrator S/N 4D106 CS-10

Avg. Δ% = -5.2

In-Station Calibrator Verification:

	Reference Calibrator Flow Setting	Reference Calibrator Analyzer Response (D)* Volts	Reference Calibrator Analyzer Response (D)* PPM	In-Station Calibrator Flow Setting	In-Station Calibrator Analyzer Response (O)* Volts	In-Station Calibrator Analyzer Response (O)* PPM	Δ%*	(≤±10%)
TP1								
TP2								

*Δ% = $\left[\frac{O-D}{D}\right]$ x 100

Signature: _____

Q.C. Review _____

Accepted ☐ Rejected ☐

1772 (12/78)

ERT

#7

Network EQB/ERT Site GUAYNABO Instrument Type TECO 43 S/N ASM 8671-102 Date 10/16/79

Calibrator: Type TECO 143 S/N SPC 7529-93 Last Cal Date 8-21-79 Temp: Des 30 °C Obs 29.98 °C

DVM: Mfg and Model FLUKE 8020A S/N 0 670547 Last Cal Date 10-1-79

Complete where Applicable: Initial: zero pot 378 span pot 897 AUDIT ONLY

Final: zero pot _____ span pot _____

Flow Setting	Flow (ℓ/min)	Input Concentrations V_D (0-10V)	Input Concentrations PPM_D (D)*	Unadjusted Readings (Obs) V_O (0-10V)	Unadjusted Readings (Obs) PPM_O (O)*	Adjusted Readings (Obs) V	Adjusted Readings (Obs) PPM_O (O)*	Adjusted Readings (Obs) V	Adjusted Readings (Obs) PPM_O (O)*	Δ%* (≤ 10%)
Zero Air			0±.005							
	~7.0	0.00	0.00	-.02	-.001					
4.7 (G)	1.78	8.00	.400	7.60	0.380					-5.0%
9.85 (G)	4.75	3.00	.15	2.75	0.138					-8.0%
9.6 (S)	8.91	1.6	.08	1.46	0.073					-9.0%

In-Station Calibrator S/N 4D 108 CS-10

Avg. Δ% = -7.3

In-Station Calibrator Verification:

	Reference Calibrator Flow Setting	Reference Calibrator Analyzer Response (D)* Volts	Reference Calibrator Analyzer Response (D)* PPM	In-Station Calibrator Flow Setting	In-Station Calibrator Analyzer Response (O)* Volts	In-Station Calibrator Analyzer Response (O)* PPM	Δ%* (≤±10%)
TP1							
TP2							

$$*\Delta\% = \left[\frac{O - D}{D}\right] \times 100$$

Signature: [signature]

Q.C. Review _____

Accepted ☐ Rejected ☐

1772 (12/78)

ERT 49

Network EQB/ERT Site SAN JUAN Instrument Type BENDIX CO S/N 34869-1 Date 10-16-79

Calibrator: Type ERT S/N 1101G Last Cal Date 8-6-79 Temp: Des _____ °C Obs _____ °C

DVM: Mfg and Model FLUKE 8020A S/N 06705547 Last Cal Date 10-1-79

Complete where Applicable: Initial: zero pot 492 span pot 800 AUDIT ONLY

Final: zero pot _____ span pot _____

Flow Setting	Flow (ℓ/min)	Input Concentrations V_D ~~(0-10V)~~	Input Concentrations PPM_D (D)*	Unadjusted Readings (Obs) V_O ~~(0-10V)~~	Unadjusted Readings (Obs) PPM_O (O)*	Adjusted Readings (Obs) V	Adjusted Readings (Obs) PPM_O (O)*	Adjusted Readings (Obs) V	Adjusted Readings (Obs) PPM_O (O)*	Δ%* (≤ 10%)
Zero Air		~~0-0.10~~	0±.005	~~0-0.10V~~						
	Zero	0.00	0.00							
2.5 / 1.38	60 / 2940	.020	10.16	.0199 / 19.9	9.98					-2.06
4.06 / 1.36	95 / 2905	.032	16.1	.0296	14.8					-8.1
5.00 / 1.35	116 / 2880	~~.038~~	~~18.6~~	.0352	17.6					-10.2

In-Station Calibrator S/N _____

Avg. Δ% = -6.8

In-Station Calibrator Verification:

	Reference Calibrator			In-Station Calibrator				
	Flow Setting	Analyzer Response (D)* Volts	Analyzer Response (D)* PPM	Flow Setting	Analyzer Response (O)* Volts	Analyzer Response (O)* PPM	Δ%*	(≤±10%)
TP1								
TP2								

*Δ% = $\left[\frac{O-D}{D}\right]$ x 100

Signature: _____

Q.C. Review _____

Accepted ☐ Rejected ☐

1772 (12/78)

ERT

Network EQB/ERT Site #12 VINA MARISOL TOM BAJA Instrument Type DASIBI S/N 2335 Date 10/16/79

Calibrator: Type ERT S/N 1106T/1101G Last Cal Date 5/6/79 Temp: Des NA °C Obs NA °C

DVM: Mfg and Model 8020A S/N 6705-47 Last Cal Date 10/4/79

Complete where Applicable: Initial: zero pot _____ span pot _____ AUDIT ONLY

Final: zero pot _____ span pot _____

O_3 ~~Flow~~ Setting	Flow (ℓ/min)	Input Concentrations V_D (~~0-10V~~)	Input Concentrations PPM_D (D)*	Unadjusted Readings (Obs) V_O (~~0-10V~~)	Unadjusted Readings (Obs) PPM_O (O)*	Adjusted Readings (Obs) V	Adjusted Readings (Obs) PPM_O (O)*	Adjusted Readings (Obs) V	Adjusted Readings (Obs) PPM_O (O)*	Δ%* (≤ 10%)
Zero Air		0 - 1 V	0±.005							
~~ZERO~~ NONE	5.00 (2.39V)		~~.447~~ 0.00	0.06	.006					
420	5.00 (2.39)	.507 .447 .406	.447	0.506	.447					0%
320	"	.403	.343	0.417	.357					+4%
210	"	.320	.260	0.327	.267					+2.7%
110	"	.260	.150	0.207	.147					-2%
50	"	.118	.058	0.117	.057					

In-Station Calibrator S/N _____

In-Station Calibrator Verification:

Reference Calibrator Flow Setting	Reference Calibrator Analyzer Response (D)* Volts	Reference Calibrator Analyzer Response (D)* PPM	In-Station Calibrator Flow Setting	In-Station Calibrator Analyzer Response (O)* Volts	In-Station Calibrator Analyzer Response (O)* PPM	Δ%*	(≤±10%)
TP1							
TP2							

* .06 V offset added to all DES values

Avg. Δ% =

*Δ% = $\left[\frac{O - D}{D}\right]$ x 100

Signature: _____

Q.C. Review _____

Accepted ☐ Rejected ☐

1772 (12/78)

ERT

Network EQB / ERT Site Baymon #19 Instrument Type TECO 43 S/N 8684-102 Date 10/17/79

Calibrator: Type TECO 143 S/N 7529-93 Last Cal Date 5-21-79 Temp: Des 30 °C Obs 30 °C

DVM: Mfg and Model FLUKE 8020A S/N 0670547 Last Cal Date 10-1-79

Complete where Applicable: Initial: zero pot 284 span pot 894 AUDIT ONLY

Final: zero pot _____ span pot _____

Flow Setting	Flow (ℓ/min)	Input Concentrations V_D (0-10V)	Input Concentrations PPM_D (D)*	Unadjusted Readings (Obs) V_o (0-10V)	Unadjusted Readings (Obs) PPM_o (O)*	Adjusted Readings (Obs) V	Adjusted Readings (Obs) PPM_o (O)*	Adjusted Readings (Obs) V	Adjusted Readings (Obs) PPM_o (O)*	Δ%* (≤ 10%)
Zero Air			0±.005							
	ZERO	0.00	0.00	−0.01						
4.7 (G)	1.78	8.0	0.40	8.25	0.413					+3.1%
9.85 (G)	4.75	3.0	0.15	3.12	0.156					+4%
9.6 (S)	8.91	1.6	0.08	1.60	0.08					0

In-Station Calibrator S/N 4D 109

Avg. Δ% = + 2.4

In-Station Calibrator Verification:

	Reference Calibrator Flow Setting	Reference Calibrator Analyzer Response (D)* Volts	Reference Calibrator Analyzer Response (D)* PPM	In-Station Calibrator Flow Setting	In-Station Calibrator Analyzer Response (O)* Volts	In-Station Calibrator Analyzer Response (O)* PPM	Δ%* (≤±10%)
TP1							
TP2							

*Δ% = $\left[\frac{O - D}{D}\right]$ x 100

Signature: _____

Q.C. Review _____

Accepted ☐ Rejected ☐

1772 (12/78)

ERT

#27

Network EQB/ERT Site LEVITTOWN Instrument Type TECO 43 S/N 8622-101 Date 10-17-79

Calibrator: Type TECO 143 S/N 7529-93 Last Cal Date 8-21-79 Temp: Des 30 °C Obs 30 °C

DVM: Mfg and Model FLUKE 8020A S/N 0670547 Last Cal Date 10-1-79

Complete where Applicable: Initial: zero pot 440 span pot 115 AUDIT ONLY

Final: zero pot _____ span pot _____

Flow Setting	Flow (ℓ/min)	Input Concentrations V_D (0-10V)	Input Concentrations PPM_D (D)*	Unadjusted Readings (Obs) V_o (0-10V)	Unadjusted Readings (Obs) PPM_o (O)*	Adjusted Readings (Obs) V	Adjusted Readings (Obs) PPM_o (O)*	Adjusted Readings (Obs) V	Adjusted Readings (Obs) PPM_o (O)*	Δ%* (≤ 10%)
Zero Air			0±.005							
	ZERO	0.00	0.00	0.09	0.005					
4.7 (6)	1.78	8.0	0.40	7.73	0.389					-2.75%
9.85(6)	4.75	3.0	0.15	2.88	0.144					-4%
9.65)	8.91	1.6	0.08	1.57	0.078					-2.5%

In-Station Calibrator S/N TECO 143 8630-101

Avg. Δ% = -3.1

In-Station Calibrator Verification:

	Reference Calibrator Flow Setting	Reference Calibrator Analyzer Response (D)* Volts	Reference Calibrator Analyzer Response (D)* PPM	In-Station Calibrator Flow Setting	In-Station Calibrator Analyzer Response (O)* Volts	In-Station Calibrator Analyzer Response (O)* PPM	Δ%*	(≤±10%)
TP1								
TP2								

*Δ% = $\left[\frac{O-D}{D}\right]$ x 100

Signature: _____

Q.C. Review _____

Accepted ☐ Rejected ☐

1772 (12/78)

ERT
ENVIRONMENTAL RESEARCH & TECHNOLOGY INC.

High Volume Air Sampler Calibration

Sys. No. 1 2 3 4

Date 10-18-79 By A. SACCO

EQ13 ~~ERT~~ No. 025443

Cal. Serial No. 3092 Temp. 87 °F At. Press. ?

Network ERT/EQB Station GUANICA ID 14

Check(√) Motor Change ____ Brush Change ____ Recal ____

Semi-Ann. ____ Maint. ____ New Hi-Vol. ____ Other NEW INSTALL

Remarks

Plate No.	OBS	True H_2O	True Cfm (from curve)	True Cfm (Corrected)
18	60.5	12.5	61	
13	53.5	9.2	52.5	
10	48	7.3	46.5	
7	39	4.4	36	
5	33	2.6	27.5	
	*△		*△	

Instructions

1. 18 hole plate reading must be between 47 - 60 cfm.
2. Circle System No. for Hi-Vol at top right.
3. The ΔOBS should be>.70 and the Δcfm> 20.
4. Sample time must be within ± 60 mins. of 24 hrs.
5. To calculate flow criteria: compute ±5 cfm of the initial average and ±10 cfm of the final average. The final flow should not exceed the initial by > 3 cfm.
6. The final flow should be greater than 20 cfm.

Flows

Init	Final
1	1
2	2
3	3
4	4
Avg	

For LAB use only

Effective Dates

Begin Curve ____

Retro to ____

End Use ____

Approved ____

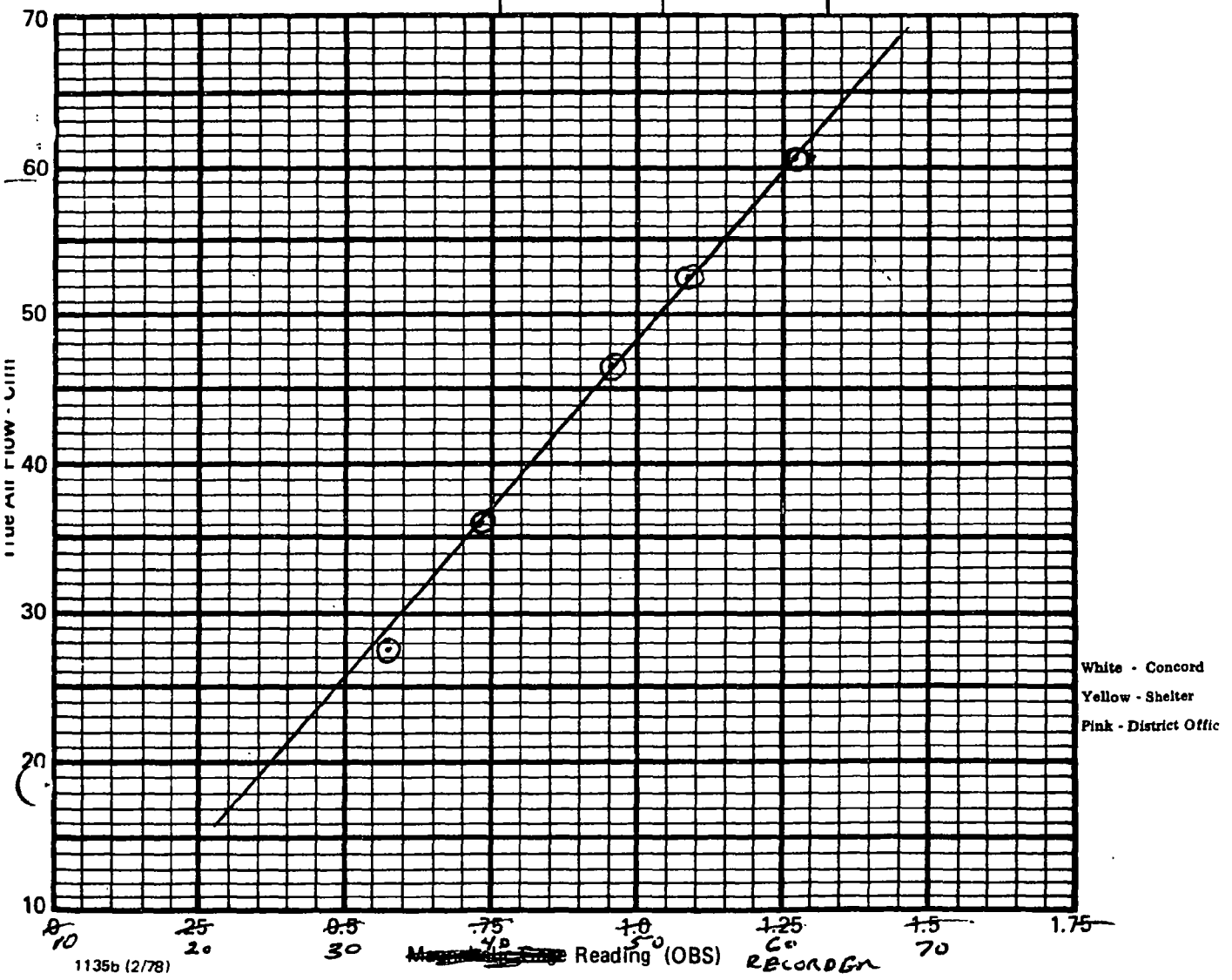

White - Concord
Yellow - Shelter
Pink - District Offic

1135b (2/78)

ERT
ENVIRONMENTAL RESEARCH & TECHNOLOGY, INC

High Volume Air Sampler Calibration

Sys. No. 1 2 3 4

Date 10-18-79 By A. SACCO

ERT No. EQB

Cal. Serial No. 3029 Temp. 80°F At. Press. _____

Network EQB/ERT Station GUYAMA ID 15

Check(√) Motor Change _____ Brush Change _____ Recal _____

Semi-Ann. _____ Maint. ___ New Hi-Vol. _____ Other NEW SITE

Remarks

Plate No.	OBS	True H_2O	True Cfm (from curve)	True Cfm (Corrected)
18	55	10.7	57	
13	47	7.9	48.5	
10	43	6.1	42.5	
7	36	3.8	33.5	
5	30	2.4	26.5	
	*△		*△	

Instructions

1. 18 hole plate reading must be between 47 - 60 cfm.
2. Circle System No. for Hi-Vol at top right.
3. The ΔOBS should be>.70 and the Δcfm> 20.
4. Sample time must be within ± 60 mins. of 24 hrs.
5. To calculate flow criteria: compute ±5 cfm of the initial average and ±10 cfm of the final average. The final flow should not exceed the initial by > 3 cfm.
6. The final flow should be greater than 20 cfm.

Flows

Init	Final
1	1
2	2
3	3
4	4
Avg	

For LAB use only

Effective Dates

Begin Curve _____

Retro to _____

End Use _____

Approved _____

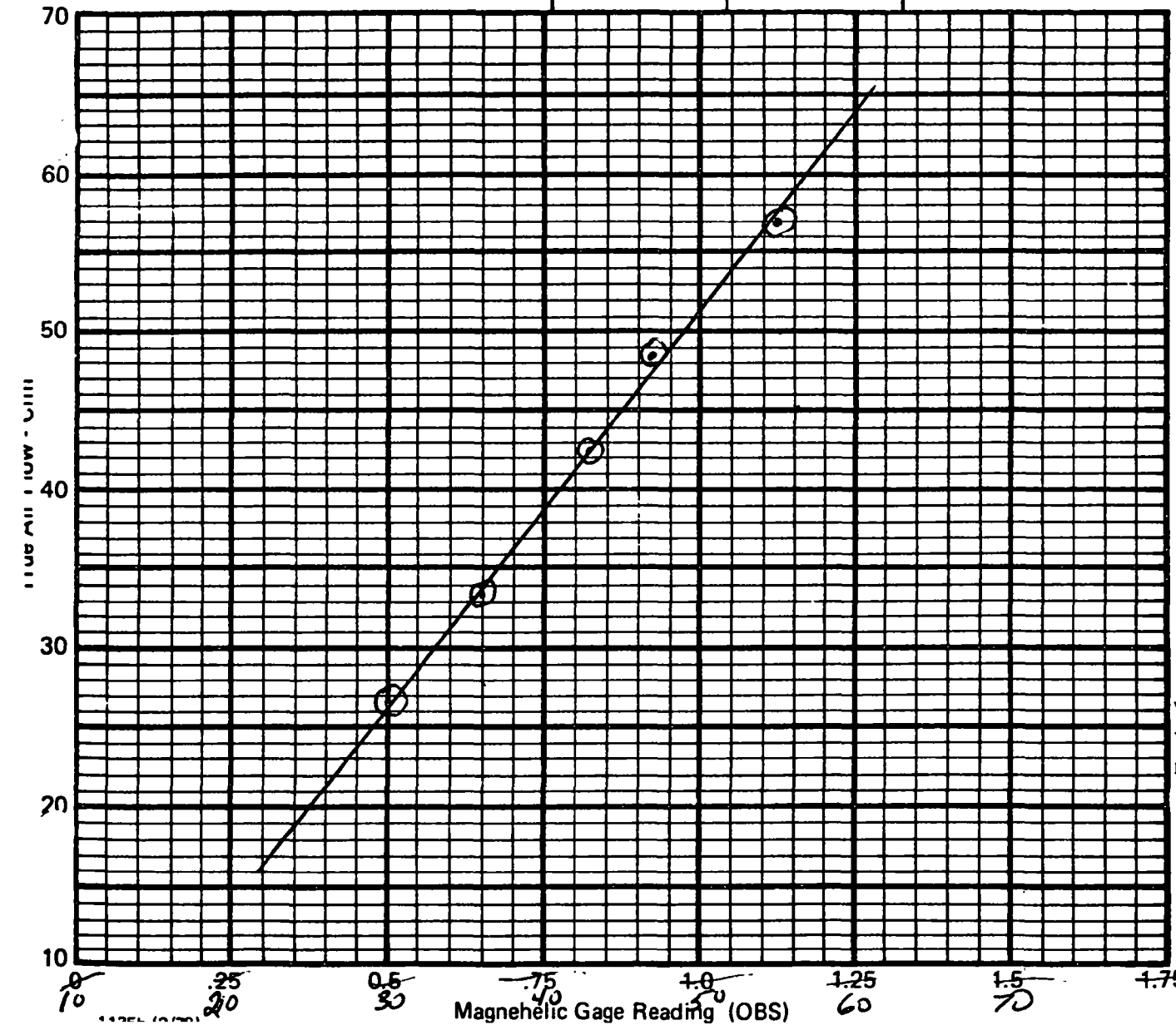

White - Concord
Yellow - Shelter
Pink - District Offi

TECHNICAL REPORT DATA
(Please read Instructions on the reverse before completing)

1. REPORT NO.	2.	3. RECIPIENT'S ACCESSION NO.
EPA 902/4-80-001		-

4. TITLE AND SUBTITLE	5. REPORT DATE
Environmental Monitoring Training Program developed by Environmental Research & Technology for the Puerto Rico Environmental Quality Board	March 1980
	6. PERFORMING ORGANIZATION CODE: ERT P-7421

7. AUTHOR(S)	8. PERFORMING ORGANIZATION REPORT NO.
Hector R. Diaz Edward W. Fasci	

9. PERFORMING ORGANIZATION NAME AND ADDRESS	10. PROGRAM ELEMENT NO.
Environmental Research & Technology, Inc. 696 Virginia Road Concord, Massachusetts 01742	11. CONTRACT/GRANT NO. BOA 68022542

12. SPONSORING AGENCY NAME AND ADDRESS	13. TYPE OF REPORT AND PERIOD COVERED
U.S. Environmental Protection Agency Region II 26 Federal Plaza New York, New York 10007	Final 14. SPONSORING AGENCY CODE

15. SUPPLEMENTARY NOTES

16. ABSTRACT

ABSTRACT

This report presents the results of a training and monitoring operations program conducted in Puerto Rico by ERT in conjunction with the Puerto Rico Environmental Quality Board (EQB). Major components of this program consisted of the following:

a) Program definition and design;

b) Procurement and checkout of equipment and spare parts;

c) Design and implementation of a classroom and field training plan;

d) Network installation and start-up; and

e) Network operations.

A qualified English/Spanishspeaking instructor was provided by ERT for the duration of the program in Puerto Rico.

This program served the purpose of introducing EQB to the concept of continuous air monitoring. Prior to this program, the EQB monitoring network consisted of manual "wet chemistry" methods for the obtainment of ambient air quality data.

17. KEY WORDS AND DOCUMENT ANALYSIS

a. DESCRIPTORS	b. IDENTIFIERS/OPEN ENDED TERMS	c. COSATI Field/Group
Air Pollution Atmospheric Monitoring		

18. DISTRIBUTION STATEMENT	19. SECURITY CLASS *(This Report)*	21. NO. OF PAGES
Unlimited	None	
	20. SECURITY CLASS *(This page)*	22. PRICE
	None	

EPA Form 2220-1 (9-73)