PB81-127813

GC/MS Methodology for Priority Organics in Municipal Wastewater Treatment

(U.S.) Municipal Environmental Research Lab.
Cincinnati, OH

Nov 80

U.S. DEPARTMENT OF COMMERCE
National Technical Information Service
NTIS®

PB81-127813

EPA-600/2-80-196
November 1980

GC/MS METHODOLOGY FOR PRIORITY ORGANICS IN MUNICIPAL WASTEWATER TREATMENT

by

Dolloff F. Bishop
Technology Development Support Branch
Wastewater Research Division
Cincinnati, Ohio 45268

MUNICIPAL ENVIRONMENTAL RESEARCH LABORATORY
OFFICE OF RESEARCH AND DEVELOPMENT
U.S. ENVIRONMENTAL PROTECTION AGENCY
CINCINNATI, OHIO 45268

NOTICE

THIS DOCUMENT HAS BEEN REPRODUCED FROM THE BEST COPY FURNISHED US BY THE SPONSORING AGENCY. ALTHOUGH IT IS RECOGNIZED THAT CERTAIN PORTIONS ARE ILLEGIBLE, IT IS BEING RELEASED IN THE INTEREST OF MAKING AVAILABLE AS MUCH INFORMATION AS POSSIBLE.

TECHNICAL REPORT DATA
(Please read Instructions on the reverse before completing)

1. REPORT NO. EPA-600/2-80-196	2.	3. RECIPIENT'S ACCESSION NO. PB81-127813
4. TITLE AND SUBTITLE GC/MS METHODOLOGY FOR PRIORITY ORGANICS IN MUNICIPAL WASTEWATER TREATMENT		5. REPORT DATE November 1980 Issuing Date.
		6. PERFORMING ORGANIZATION CODE
7. AUTHOR(S) Dolloff F. Bishop		8. PERFORMING ORGANIZATION REPORT NO.
9. PERFORMING ORGANIZATION NAME AND ADDRESS U.S. Environmental Protection Agency, Municipal Environmental Research Laboratory, 26 W. St. Clair, Cincinnati, OH 45268		10. PROGRAM ELEMENT NO. A36BIC
		11. CONTRACT/GRANT NO.
12. SPONSORING AGENCY NAME AND ADDRESS Municipal Environmental Research Laboratory, Office of Research and Development, U.S. Environmental Protection Agency, Cincinnati, OH 45268		13. TYPE OF REPORT AND PERIOD COVERED Final Report
		14. SPONSORING AGENCY CODE

15. SUPPLEMENTARY NOTES

Project Officer: Dolloff F. Bishop (513) 684-7628

16. ABSTRACT

A state-of-the-art review is presented on the current GC/MS methodology for the analysis of priority toxic organics in municipal wastewater treatment. The review summarizes both recent published and unpublished literature on GC/MS methods for analysis of toxic organics in municipal wastewaters and sludges.

The EPA has developed methodology for the measurement of these priority toxic organics based on GC/MS technology. Succinctly, the methodology separates the purgeable priority organics from the environmental sample by purging with inert gas and trapping of the organics on a Tenax and silica gel trap. The organics are then desorbed, identified and quantitated with packed column GC/MS analysis. The methodology separates the extractable organics by extracting with methylene chloride, first at pH 11 and then at pH 2, and then identifies and quantitates the organics in the base/neutral and acid extracts by packed column GC/MS analysis.

Municipal wastewaters and sludges contain a wide variety of extractable organics which can interfere in the GC/MS analysis. Thus, the extracts may require clean-up or organics separation before the GC/MS analyses. Principal classes of organic interferences include lipids, fatty acids and saturated hydrocarbons. The approaches to separate the desirable priority organics from the interferences include acid/base separation, molecular size separation and polarity separation.

17. KEY WORDS AND DOCUMENT ANALYSIS

a. DESCRIPTORS	b. IDENTIFIERS/OPEN ENDED TERMS	c. COSATI Field/Group
Pesticides Gas Chromatography Extraction Chemical Analysis Sludge Wastewater Organics Mass Spectroscopy	Municipal Sludge Priority Organics Toxic Organics	07C

18. DISTRIBUTION STATEMENT RELEASE TO PUBLIC	19. SECURITY CLASS (This Report) UNCLASSIFIED	21. NO. OF PAGES
	20. SECURITY CLASS (This page) UNCLASSIFIED	22. PRICE

EPA Form 2220-1 (Rev. 4-77) PREVIOUS EDITION IS OBSOLETE

DISCLAIMER

This report has been reviewed by the Environmental Monitoring and Support Laboratory and the Municipal Environmental Research Laboratory, U.S. Environmental Protection Agency, and approved for publication. Approval does not signify that the contents necessarily reflect the views and policies of the U.S. Environmental Protection Agency, nor does mention of trade names or commercial products constitute endorsement or recommendations for use.

FOREWORD

The Environmental Protection Agency was created because of increasing public and government concern about the dangers of pollution to the health and welfare of the American people. Noxious air, foul water, and spoiled land are tragic testimony to the deterioration of our natural environment. The complexity of that environment and the interplay between its components require a concentrated and integrated attack on the problem.

Research and development is that necessary first step in problem solution and it involves defining the problem, measuring its impact, and searching for solutions. The Municipal Environmental Research Laboratory develops new and improved technology and systems for the prevention, treatment, and management of wastewater and solid and hazardous waste pollutant discharges from municipal and community sources, for the preservation and treatment of public drinking water supplies, and to minimize the adverse economic, social, health, and aesthetic effects of pollution. This publication is one of the products of that research; a most vital communications link between the researcher and the user community.

This report describes the state-of-the-art on GC/MS methodology for measuring priority organics in municipal wastewaters and sludges.

Francis T. Mayo
Director
Municipal Environmental Research
Laboratory

ABSTRACT

A state-of-the-art review is presented on the current GC/MS methodology for the analysis of priority toxic organics in municipal wastewater treatment. The review summarizes both recent published and unpublished literature on GC/MS methods for analysis of toxic organics in municipal wastewaters and sludges.

The EPA has developed methodology for the measurement of these priority toxic organics based on GC/MS technology. Succinctly, the methodology separates the purgeable priority organics from the environmental sample by purging with inert gas and trapping of the organics on a Tenax and silica gel trap. The organics are then desorbed, identified and quantitated with packed column GC/MS analysis. The methodology separates the extractable organics by extracting with methylene chloride, first at pH 11 and then at pH 2, and then identifies and quantitates the organics in the base/neutral and acid extracts by packed column GC/MS analysis.

The basic methodology provides satisfactory analysis of the purgeable organics in municipal wastewaters but requires one modification in the equipment. Substitution of charcoal for the silica gel in the trap used in the purgeable procedure permits identification and satisfactory quantitation of all of the purgeable priority organics. In the basic methodology for extractable organics, a few of the organics are not measured well. Statistics on the analytical recoveries are summarized for the priority organics.

Municipal wastewaters and sludges contain a wide variety of extractable organics which can interfere in the GC/MS analysis. Thus the extracts may require clean-up or organics separation before the GC/MS analysis. Principal classes of organic interferences include lipids, fatty acids, and saturated hydrocarbons. The approaches to separate the desirable priority organics from the interferences include acid/base separation, molecular size separation and polarity separation. These approaches, applied in various combinations, are described as proposed methods for analysis of priority organics in municipal sludges and as additional procedures to lower the detection limit for the organics in municipal wastewaters.

This inhouse report was prepared during the period of December 1979-March 1980.

CONTENTS

Foreword. iii
Abstract iv
Figures vi
Tables. vii

1. Introduction 1
2. Conclusions. 7
3. Basic Methodology. 8
   Recoveries and quality control 14
4. Analysis of Sludge Samples. 18
   Purgeable analysis of sludge samples. 18
5. Reduction of Detection Limits in Municipal Wastewater. 36
6. Analysis of Aeration Samples. 39

References. 41

FIGURES

Number		Page
1a	Purging device	12
1b	Trap packing and construction for desorb capability	12
2	System for purge and trap analyses - desorb mode	13
3	Sludge and purging tube	20
4	Schematic of VOA analysis instrumentation using cryogenic trapping and capillary GC/MS separation	23
5	GPC separation of organics	25
6	Sampler system for aeration	40

TABLES

Number		Page
1	Priority Organics in GC/MS Analysis.	2-5
2	Typical Sample Matrices in Municipal Wastewater Treatment.	6
3	Method for Purgeables.	9
4	Method for Extractables.	10
5	Method for 2,3,7,8-Tetrachlorodibenzo-p-Dioxin.	11
6	Recoveries of Priority Pollutants.	16
7	Interim Procedure for Analysis of Purgeable Organics in Sludges.	19
8	Analysis of Purgeable Organics by Cryotrap Capillary GC/MS.	21
9	Analysis of Extractable Organics in Sludges.	26
10	Procedure for Analysis of Pesticides and PCB's in Sludges.	27
11	Recovery of Priority Pollutants from Water.	28-29
12	Recoveries for Pesticides and PCB's.	31-32
13	Interim Procedure for Analysis of Extractable Organics in Sludges.	33
14	Analysis of Extractable Organics with Clean-up and Capillary GC/MS.	34
15	GC Column Characteristics.	37

SECTION I

INTRODUCTION

One pathway for the dispersal of toxic organics into the environment is through the municipal wastewater treatment system. Toxics entering the system from industrial, domestic and commercial sources may either be destroyed by the degradation processes in the system or dispersed into the environment through the air, water or solids discharges from the treatment system. Many toxics in various concentrations potentially may be found in municipal wastewater treatment systems; this, in turn, requires suitable analytical methodology for assessing the need for regulation.

As a practical approach in the toxics regulatory process, the EPA, based upon a U.S. court consent decree (1), has established for its initial regulatory effort a priority list of 129 toxics. These priority toxics include 114 specific organic compounds. One organic, bis(chloromethyl)ether, is unstable in aqueous samples.

In analysis, these priority organics may be divided into purgeable and extractable classes (Table 1). The extractable class is further subdivided into acid, base and neutral compounds and into a selected neutral subclass of pesticides and PCB's. The Agency has developed methodology (2) for the measurement of these priority toxic organics based on GC/MS technology. Succinctly, the methodology separates the priority organics from the environmental sample either by purging with inert gas or by extracting with a solvent, and then identifies and quantitates the separated organics by GC/MS. For municipal wastewater samples with potentially large numbers of individual organic compounds at low concentrations, a mass spectrometer is required as the detection device to confirm the identities of the many individual organic species. This paper provides a perspective on the GC/MS measurement methodology for EPA priority organics in the wide variety of sample matrices encountered in municipal wastewater treatment. The reader is referred to the references for specific details on the individual analytical procedures.

Before discussing the analytical methodology, a characterization of the variety of sample matrices encountered during municipal wastewater treatment is desirable. In municipal wastewater treatment, the more important sample types (Table 2) reveal a wide range of organic content as characterized by their COD and suspended solids concentrations. The substantial amounts of the gross organic content in these samples produce background interference in the GC/MS methodology, especially for the extractable organics from samples with high solids content. Indeed, municipal sludge samples, which may have a wide concentration range varying from approximately 1 percent solids to the more than 30 percent solids in dewatered sludges, produce highly variable background matrices.

TABLE I. PRIORITY ORGANICS IN GC/MS ANALYSIS

Compounds	Limit of Detection* µg/l
PURGEABLE ORGANICS by Purge and Trap	
Acrolein**	100
Acrylonitrile**	100
Benzene	10
Bromodichloromethane	10
Bromoform	10
Bromomethane	10
Carbon Tetrachloride	10
Chlorobenzene	10
Chloroethane	10
2-Chloroethylvinyl ether	10
Chloroform	10
Chloromethane	10
Dibromochloromethane	10
1,1-Dichloroethane	10
1,2-Dichloroethane	10
1,1-Dichloroethene	10
trans-1,2-Dichloroethene	10
1,2-Dichloropropane	10
cis-1,3-Dichloropropene	10
trans-1,3-Dichloropropene	10
Ethylbenzene	10
Methylene chloride	10
1,1,2,2-Tetrachloroethane	10
Tetrachloroethene	10
1,1,1-Trichloroethane	10
1,1,2 Trichloroethane	10
Trichloroethene	10
Trichlorofluoromethane	10
Toluene	10
Vinyl chloride	10

(continued)

TABLE 1 (continued).

Compounds	Limit of Detection* µg/l
EXTRACTABLE ORGANICS	
Acid Extractables	
4-Chloro-3-methylphenol	25
2-Chlorophenol	25
2,4-Dichlorophenol	25
2,4-Dimethylphenol	25
2,4-Dinitrophenol	250
2-Methyl-4,6-dinitrophenol	250
2-Nitrophenol	25
4-Nitrophenol	25
Pentachlorophenol	25
Phenol	25
2,4,6-Trichlorophenol	25
Base-Neutral Extractables	
Acenaphthene	10
Acenaphthylene	10
Anthracene	10
Benzo(a)anthracene	10
Benzo(b)fluoranthene	10
Benzo(k)fluoranthene	10
Benzo(a)pyrene	10
Benzo(g,h,i)perylene	25
Benzidine	10
Bis(2-chloroethyl)ether	10
Bis(2-chloroethoxy)methane	10
Bis(2-ethylhexyl)phthalate	10
Bis(2-chloroisopropyl)ether	10
4-Bromophenyl phenyl ether	10
Butyl benzyl phthalate	10
2-Chloronapthalene	10
4-Chlorophenyl phenyl ether	10
Chrysene	10
Dibenzo(a,h)anthracene	25
Di-n-butylphthalate	10
1,3-Dichlorobenzene	10
1,4-Dichlorobenzene	10
1,2-Dichlorobenzene	10
3,3-Dichlorobenzidine	10

(continued)

TABLE I (continued).

Compounds	Limit of Detection* µg/l
Diethylphthalate	10
Dimethylphthalate	10
2-4-Dinitrotoluene	10
Di-n-octylphthalate	10
1,2-Diphenylhydrazine	10
Fluoranthene	--
Fluorene	10
Hexachlorobenzene	10
Hexachlorobutadiene	10
Hexachloroethane	10
Hexachlorocyclopentadiene	10
Indeno(1,2,3-cd)pyrene	25
Isophorone	10
Naphthalene	10
Nitrobenzene	10
N-Nitrosodimethylamine	--
N-Nitrosodi-n-propylamine	10
N-Nitrosodiphenylamine	10
Phenanthrene	10
Pyrene	10
2,3,7,8-Tetrachlorodibenzo-p-dioxin	0.003***
1,2,4-Trichlorobenzene	10
Pesticides and PCB Extractables	
Aldrin	10
a-BHC	10
b-BHC	10
d-BHC	10
g-BHC	10
Chlordane (multi-component)	--
4,4'-DDD	10
4,4'-DDE	10
4,4'-DDT	10
Dieldrin	10
Endosulfan I	10
Endosulfan II	10
Endosulfan Sulfate	10
Endrin	10
Endrin Aldehyde	10
Heptachlor	10
Heptachlor Epoxide	10

(continued)

TABLE 1 (continued).

Compounds	Limit of Detection* µg/l
Toxaphene (multi-component)	--
PCB-1016 (multi-component)	--
PCB-1221 (multi-component)	--
PCB-1232 (multi-component)	--
PCB-1242 (multi-component)	--
PCB-1248 (multi-component)	--
PCB-1254 (multi-component)	--
PCB-1260 (multi-component)	--

*This is a minimum level at which the entire system must give recognizable mass spectra and acceptable calibration points.

**Detection limits for these two compounds refer to either the GC/MS method or direct aqueous injection (GC-FID).

***Detection limit for both electron capture and GC/MS detectors.

TABLE 2. TYPICAL SAMPLE MATRICES IN MUNICIPAL WASTEWATER TREATMENT

	mg/l		
	COD	SS	Extractable Organics*
Raw Wastewater	300-450	200-400	50-100
Primary Effluent	200-375	100-250	25-65
Secondary Effluent	50-100	15-50	3-10
Primary Sludge	10,000-50,000	10,000-50,000	2,500-12,500
Secondary Sludge	10,000	10,000	1,500
Digested Sludge	35,000	50,000	6,000
Aeration (air) Streams	-	-	-

*Extract air-dried at ambient temperature for 24 hours to remove methylene chloride solvent.

SECTION 3

BASIC METHODOLOGY

The basic EPA methodology (2) for analysis of the two classes, purgeable and extractable priority organics in industrial and municipal wastewaters, are schematically presented in Tables 3, 4, and 5. This basic methodology has been used to develop much of the initial data on toxics in municipal wastewaters and is being used in the Agency's ongoing 40-city survey of toxics in municipal wastewater treatment.

In the method for purgeable organics (2)(3), a 5-ml wastewater sample is purged of the volatile organics by a stream of inert gas in a specially designed purging chamber (Figure 1a). The volatile organics in the purging gas are removed from the gas by an adsorption trap (Figure 1b). After sample purging has been completed, the trap is simultaneously heated and back-flushed rapidly to desorb the purgeable organics into the inlet of a gas chromatograph (Figure 2). The specific priority organics separated by the GC column are then identified and quantitated by a mass spectrometer.

In the extraction method, a 1- to 2-liter sample of wastewater is extracted with methylene chloride, first at pH 11 or greater to separate the basic and neutral organics from the sample, then at pH 2 to separate the acids (phenols). The extractions at each sample pH are repetitively performed with three portions of solvent in a separatory funnel or, where emulsions occur, by continuous extraction techniques. The extracts are dried by passing them through a column of anhydrous sodium sulfate and are then concentrated to a volume of 1-ml using a Kuderna-Danish evaporator. A portion of each extract is injected into appropriate packed-column gas chromatographs for separation, and the separated fractions are then identified and quantitated by mass spectroscopy. While the pesticides and PCB's can be analyzed in the overall base/neutral extract, extraction of a separate wastewater sample using 15 percent methylene chloride in hexane (4)(5) (often with florisil chromatography clean-up before GC/MS spectroscopy) has also been employed for the pesticide and PCB subclass.

For the analysis of the toxic TCDD (Dioxin), a specific GC/MS procedure (2) (Table 5) and a summary for safe handling practice has been developed. In the procedure, a 1-liter sample (pH range 5-9) is extracted in a separatory funnel with methylene chloride. The extract is washed first with 1N NaOH then with 1N H_2SO_4, dried by sodium sulfate, and solvent exchanged into hexane during extract concentration to 1 ml volume. Additional clean-up and separation procedures, when required, include silica gel, alumina, or charcoal-silica-gel column clean-up, before either GC (electron capture) or the GC/MS analysis. If the presence of TCDD is

SECTION 2

CONCLUSIONS

Basic GC/MS methodology has been developed for measurement of priority organics in municipal wastewaters. Detection limits vary with the matrix, but have been estimated at approximately 10 μg/l for purgeable organics and base/neutral extractable organics and from 25 to 250 μg/l for the acid (phenol) extractable organics.

Modification of the method for the purgeables and application of the clean-up and separation techniques for extractable organics provide measurement of the organics in municipal wastewaters at approximately 1 μg/l.

Methodology is undergoing development and verification for the measurement of priority organics in sludges. Modified techniques or separation and clean-up procedures are required for GC/MS analysis of the priority organics in sludges. The methods should permit analysis of most of the priority organics in sludges, but detection limits in the variable matrices have not yet been adequately determined.

Methods for analyses of the organics in aeration streams at municipal treatment plants have also been developed. The detection limit is generally between 1-10 ng/l of air. The overall GC/MS analytical state-of-the-art, with appropriate quality control, should be satisfactory to evaluate the fate and partitioning of priority organics as they pass through municipal wastewater treatment plants.

TABLE 3. METHOD FOR PURGEABLES

5-ml sample

↓

Purging with He or N_2 at ambient temperature

↓

Adsorb on GC trap (Tenax + silica gel)

↓

Desorb at 180° with inert gas backflush

↓

GC/MS Analysis with packed column
(0.2% Carbowax 1500 on Carbopak C with 3% precolumn)
External standard method for quantitation

TABLE 4. METHOD FOR EXTRACTABLES

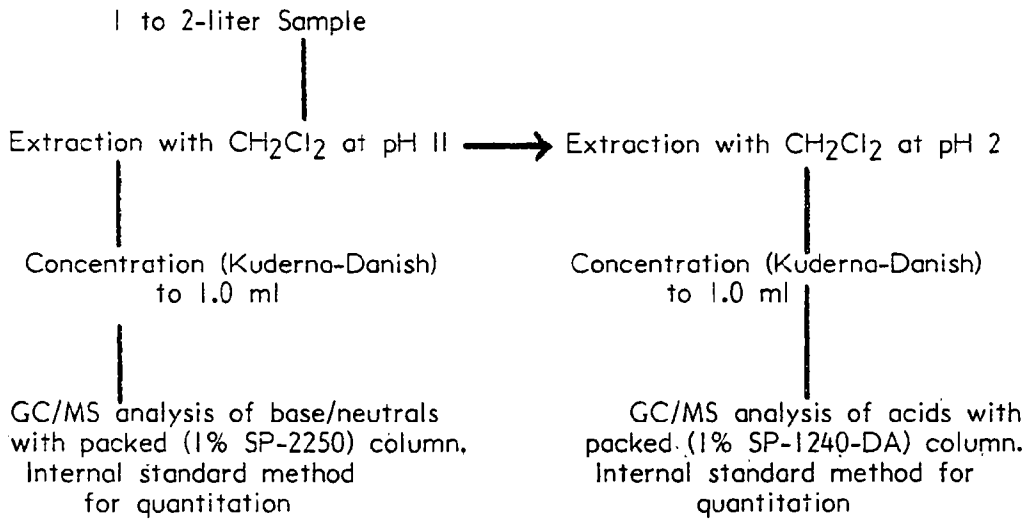

TABLE 5. METHOD FOR 2,3,7,8-Tetrachlorodibenzo-p-Dioxin

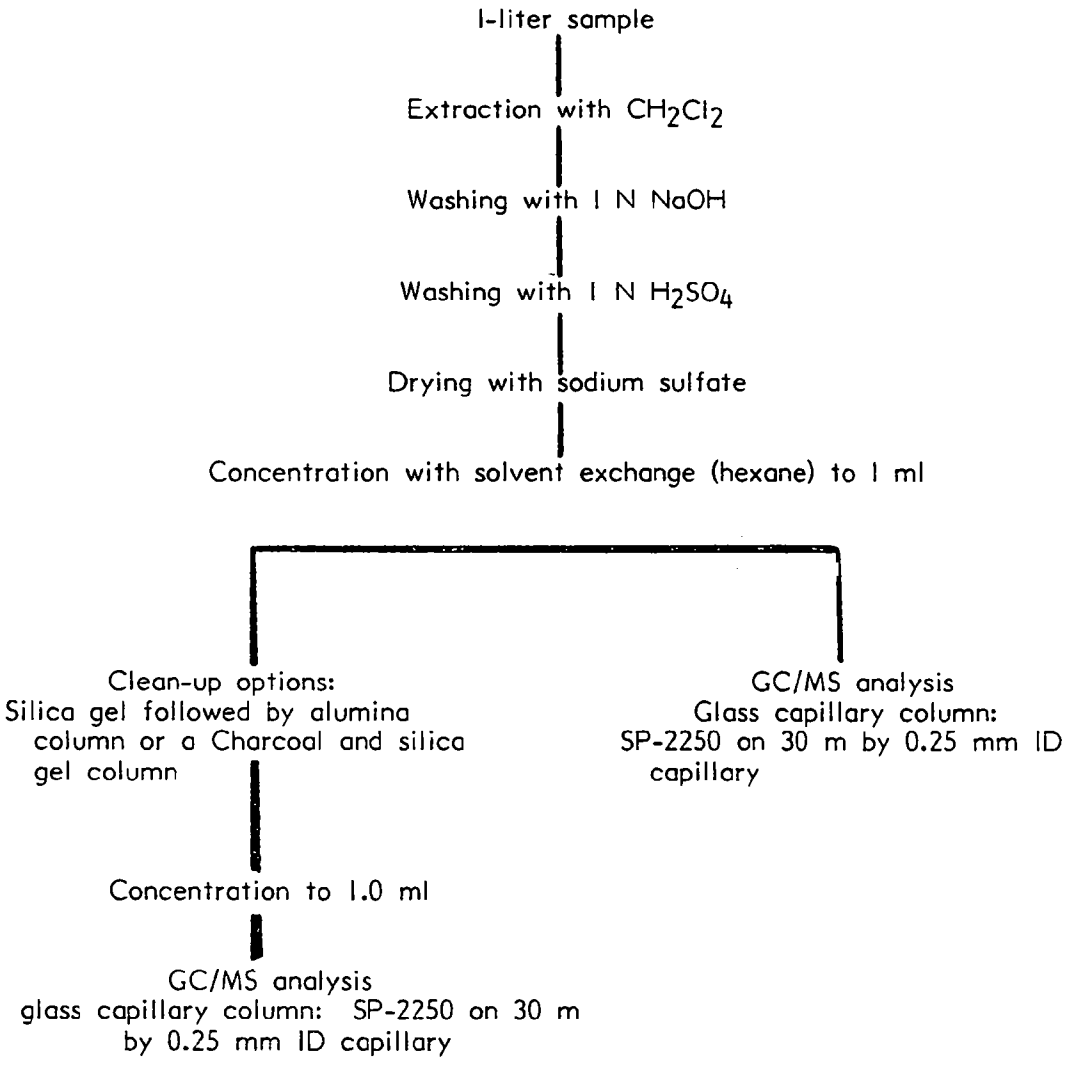

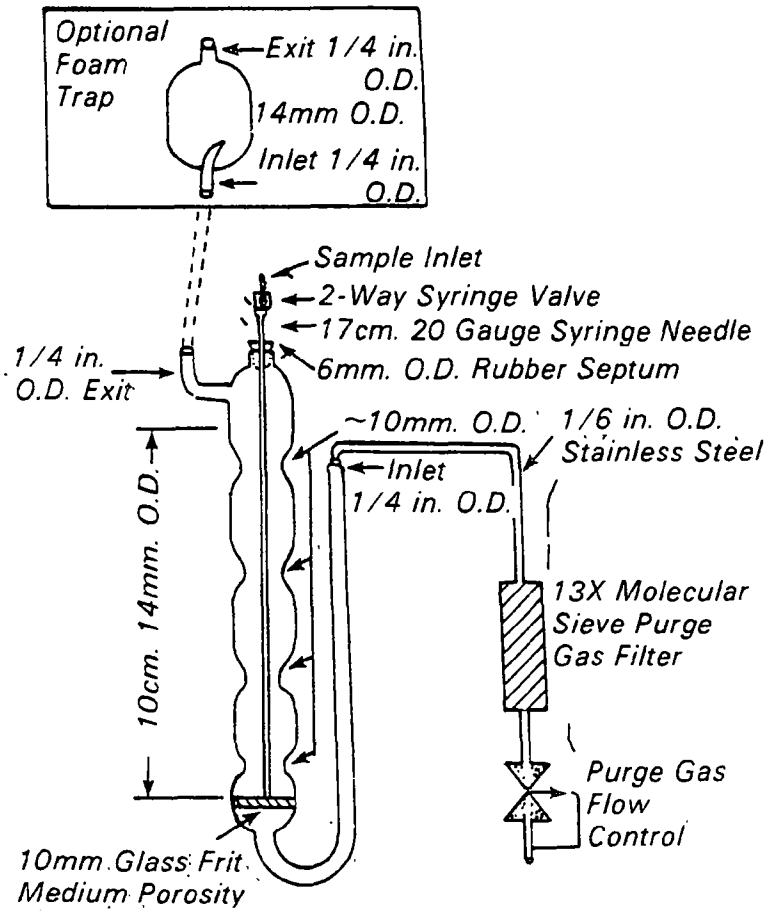

Figure 1A. Purging device.

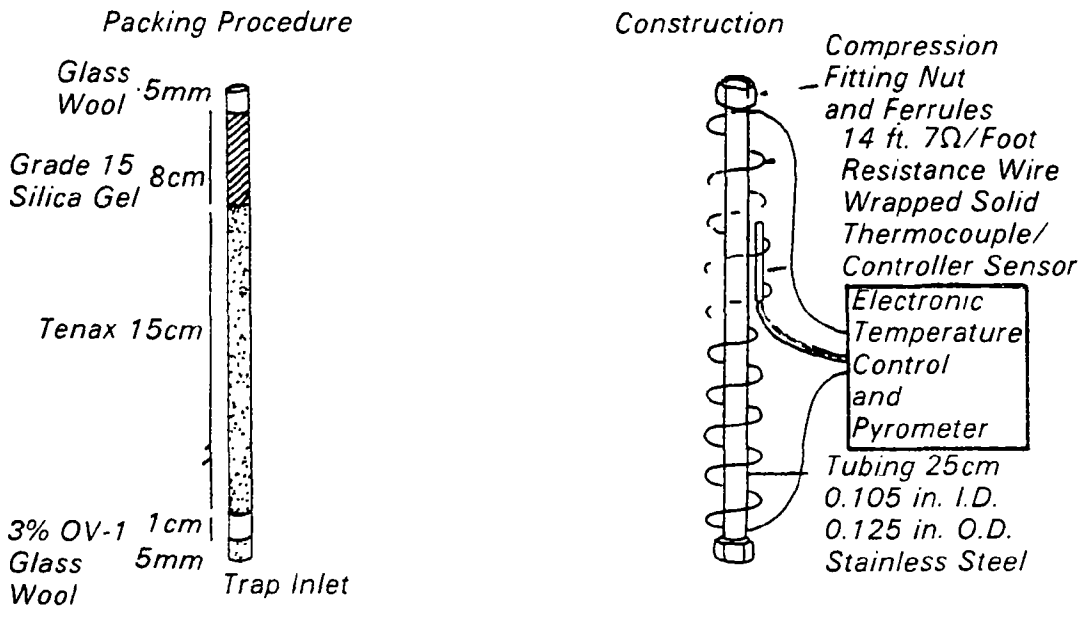

Figure 1b. Trap packing and construction for desorb capability.

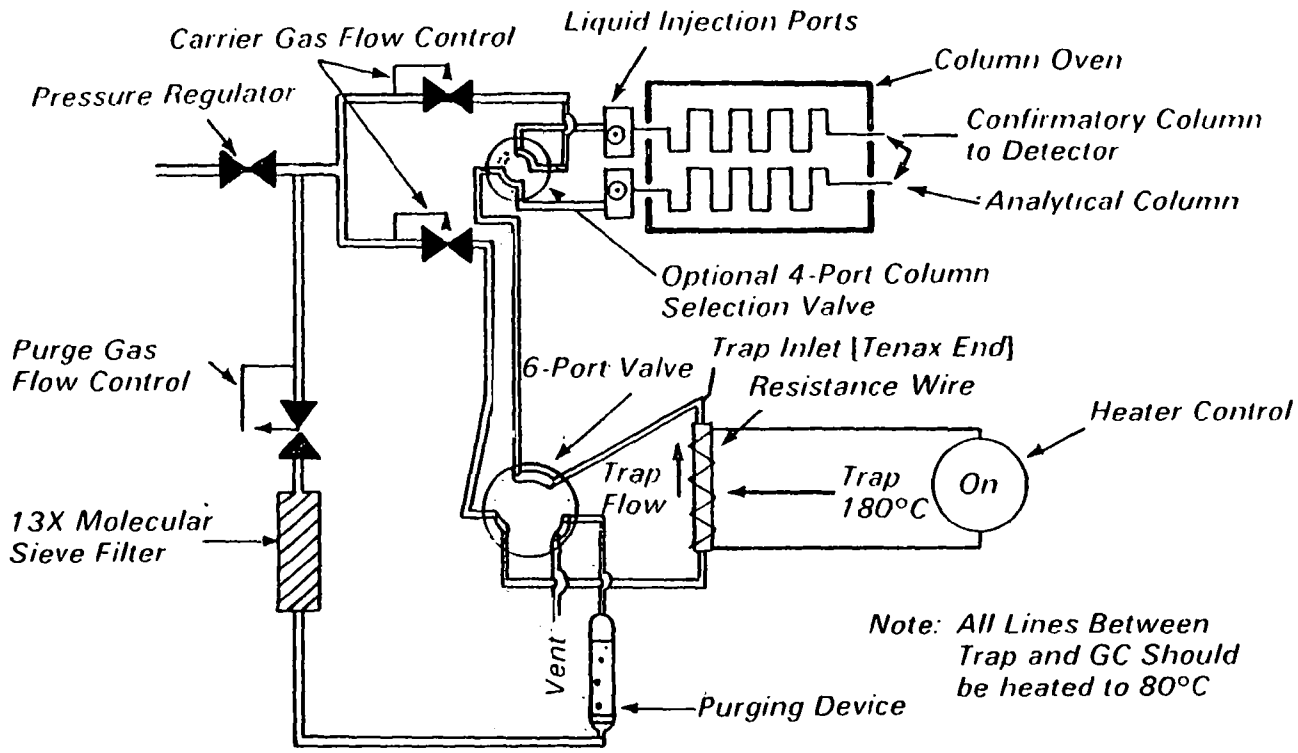

Figure 2. System for purge and trap analyses - desorb mode.

remotely possible, all of the laboratory operations must be performed in a limited access laboratory with the analyst wearing full protective covering to prevent exposed skin surfaces.

The detection limits (Table I) for the basic EPA methodology represent Agency estimates for typical wastewaters. The actual detection limits depend upon the interferences in the sample matrix. The minimum detection limits (6) for the basic EPA GC/MS methodology (2) in spiked distilled water are currently being developed by the EPA's Environmental Monitoring and Support Laboratory for the priority organics.

RECOVERIES AND QUALITY CONTROL

The basic methodology for purgeable and extractable organics has been extensively applied to four raw municipal wastewaters (7). The initial application using the basic methodology missed four of the purgeable organics, chloromethane, dichlorodifluoromethane, vinyl chloride and bromomethane. With substitution of charcoal for the silica gel in the Tenax Trap and purging at -49°C, the modified approach (7) identified all of the purgeable organics and exhibited the best overall recoveries (~ 90%) for the analysis of priority organics in municipal wastewaters.

The basic methodology (2) does not measure all of the extractable priority pollutants well. N-nitrosodimethylamine does not chromatograph effectively under the conditions of the method and is sufficiently volatile as an extractable organic to provide poor analyses. Hexachlorocyclopentadiene, while successfully determined (8) in some laboratories, has been missed by others (7). Munch (9) attributes the difficulty to decomposition of the compound because of improper operating temperatures in the injection port of the GC column. Reactivity and decomposition of the compound in the aqueous or solvent systems may also contribute to variable results. Further study is needed to evaluate the methodology as applied to hexachloropentadiene. The 2-chloroethyl vinyl ether in the base/neutral extract also was not detected (7) by the basic methodology.

Kleopfer et al. (8) questions whether bis(2-chloroethoxy)methane is stable enough, especially under basic conditions, to be analyzable by the methodology. Thermal decomposition of 1, 2-diphenyl hydrazine to azobenzene and N-nitrosodiphenylamine to diphenylamine has also been observed (10). Finally, co-eluting pairs of anthracene-phenanthrene, benzo(a)anthracene-chrysene, and benzo(b)fluoranthrene-benzo(k)fluoranthrene on the specified packed GC column are not distinguished by mass spectroscopy and, therefore, not distinguishable by the methodology. When desired, the use of capillary GC columns (SP-2100 on 30-m wall-coated capillary) in place of the packed column (11) can eliminate the coelution problem for the three co-eluting pairs.

The bases (benzidines) have been difficult to chromatograph at low concentrations. An alternative HPLC method (12)(13) specifically for benzidines has significantly lower detection limits. Legal verification of the benzidines, however, may require a GC/MS procedure.

Phenols analysis has been erratic. Poor quality control in the preparation of some of the GC columns for phenols may be responsible. With properly prepared GC columns (1% SP-1240-DA), however, the methodology produced satisfactory measurement of the phenols spiked at 50 µg/l in municipal raw wastewater (7)(8) and in industrial wastewaters (8) at higher spiking levels. Indeed, the method provided satisfactory recoveries (7) of 2,4,-dinitrophenol and 2-methyl-4,6-dinitrophenol at the 50 ppb level, even where Agency-estimated detection limits (Table 1) are 250 ppb.

Experience (8)(14) with the basic methodology for extractables also has revealed that base/neutral extraction followed by acid extraction, to separate the extractable organics into base/neutral and acid subclasses and to reduce the interferences in each subclass, does not cleanly separate the subclasses. Variable amounts of individual neutral or acid compounds were extracted into the inappropriate subclass extract, and thereby reduced recoveries of the compounds. The neutral losses into the acid extract have been attributed (14) to the formation of mineral precipitates [$CaCO_3$, $Mg(OH)_2$, and $Ca_5(OH)(PO_4)_3$] during the preceding base/neutral extraction of the environmental sample. The occlusion of organics in the precipitate reduced the base/neutral extraction efficiency. Neutral losses into the acid extract have also been attributed (8) to the formation of solvent-water emulsions during base/neutral extraction (pH 11) thus reducing separation and recovery of the compounds of interest. Acid (phenols) losses to the neutrals, with extraction of a small amount of the individual phenols into the base/neutral extract, are apparently related to matrix-induced emulsion carryover (8) rather than acid-base effects.

To avoid the problem of carryover of neutrals into the acid extract and carryover of acids into the base/neutral extract, a single acid/neutral extraction (15) was applied to a strong Cincinnati raw municipal wastewater with the acid and neutral organics spiked at 20 µg/l. The acid/neutral extraction combined both acid and neutral interferences in the same extract. Late-eluting interferences prevented the identification and quantification of three neutral compounds, benzo(g,h,i) perylene, indeno(1,2,3-c,d)pyrene, and 1,2,5,6-dibenzo(a,h) anthracene. Subsequent silica gel clean-up produced usable recoveries (48-68%) of these three compounds and generally improved the recovery of the other spiked organics. Alternative clean-up such as washing one half of the final extraction with 1 N NaOH before GC/MS analysis for the neutrals or gel permeation chromatography of the entire extract to reduce overall interferences should produce equivalent or superior results. The single acid/neutral extraction, with or without clean-up, and the HPLC method for the two bases (benzidines) should offer a suitable alternative methodology for municipal wastewater samples and eliminate the acid/base separation problems.

Kleopfer et al. (8) recently completed a statistical evaluation of the EPA's basic methodology using data from seven laboratories on both industrial and municipal wastewaters. The statistics (Table 6) indicate an overall average of about 90 percent recovery of the purgeables and about 80 percent of the acids (phenols) from both distilled water and matrix analyses. Significant wastewater matrix effects did not occur for either the purgeables or the acids. Indeed, compared to recoveries in distilled water, the overall average recoveries in the matrix analyses increased slightly for purgeables and decreased slightly for acids. In the purgeable and acid analyses, Kleopfer et al. found that the recoveries for specific organics decreased significantly (purgeables, at the 99 percent confidence level; acids, at the

TABLE 6. RECOVERIES OF PRIORITY POLLUTANTS (8)

Priority Pollutant Fraction	Recoveries (percent)	
	Method Standard*	Sample Spike**
	P ± Sp***	P ± Sp***
Volatile (purgeables)	90 ± 13	92 ± 15
Acids (phenols)	84 ± 13	76 ± 19
Base/Neutrals	84 ± 25	68 ± 21
Pesticides and PCB's	78 ± 11	59 ± 11

*Method standard refers to recoveries by standard addition to blank water.

**Sample spike refers to recoveries by standard addition to sample.

***P ± Sp are weighted averages of the number of data points and are in units of percent recovery ± one standard deviation (Sp).

95 percent confidence level) as the volatility of the organics increased.

For base/neutrals, pesticides and PCB's, the study (8) revealed significantly lower average recoveries in the matrix analyses (68 percent for base/neutrals, 59 percent for pesticides and PCB's) compared to those in distilled water (84 percent for base/neutrals and 78 percent for pesticides and PCB's). The lower recovery in the matrix analysis were attributed to increased reactivity of these classes of priority organics. When Kleopfer et al. separated the B/N class into more chemically reactive and less chemically reactive groups, the statistical analyses revealed greater variability and poorer recoveries in the more reactive grouping.

The quality control data (8) obtained as specified in the methodology (2) revealed that the control limits ($\pm 3\ \sigma$) for percent recoveries on individual organics often ranged from zero to several hundred percent. This broad control range indicates that the methodology or the analytical performance of the laboratories could be improved. Nevertheless, as a measuring tool for such a wide variety of organics, the methodology with proper quality control is generally satisfactory for the screening of the organics.

SECTION 4

ANALYSIS OF SLUDGE SAMPLES

The sample matrices in municipal sludges contain sufficient interferences such that the Agency's basic methodology for organics in wastewaters is not successful. The complex samples, and those samples where low detection limits (~ 1 µg/l) are desired, require alternative and additional separation and clean-up procedures.

As a perspective on matrix interferences, 20 to 30 percent of the dry weight of solids in municipal primary sludge can be extracted from the sample by methylene chloride. Thus, for a 5 percent primary sludge, an analyst extracts into the solvent from 10 to 15 grams of organic solute on a per-liter wet sludge basis. On the same basis, the analyst may be attempting to identify and quantitate parts per billion of a specific toxic substance. Truly, the analyst is seeking a few toxic needles in an organic haystack.

PURGEABLE ANALYSIS OF SLUDGE SAMPLES

The matrix in the complex sample impacts both the conventional separation procedures and the subsequent GC/MS analyses. Purging with nitrogen or helium to separate purgeable organics from the sludge samples does not produce as consistent recoveries (16)(17)(18) of the added organics as those observed from wastewater samples. In some samples, the sample matrix apparently reduces the recovery of the toxics either by adsorption on the solids or by chemical interaction with the matrix. The available data (17)(18) based on spiked purgeables reveals failures in detection of some spiked purgeables. The organics may actually interact with the complex matrix and thus no longer be in the sample as the compounds originally added.

Suitable alternatives to purge and trap methods for purgeables in sludges are unlikely in the near future. While used in analyses of purgeables in water, solvent extraction (19), if efficiently applied to remove the organics from sludges, will extract large amounts of interferences. These interferences generally require clean-up before GC/MS analysis. With current clean-up procedures, the volatile organics would be lost.

The Agency's interim procedure (20) for purgeable analyses in sludges (Table 7) employs a modified purge and trap procedure with dilution of the sample to 5000 mg/l of solids in a modified purging apparatus (Figure 3). Chian and DeWalle (16) have further modified the purge and trap method (Table 8) to include an on-column cryotrap after the Tenax trap and ahead of a capillary GC column. The cryotrap

TABLE 7. INTERIM PROCEDURE FOR ANALYSIS OF PURGEABLE ORGANICS IN SLUDGES (20)

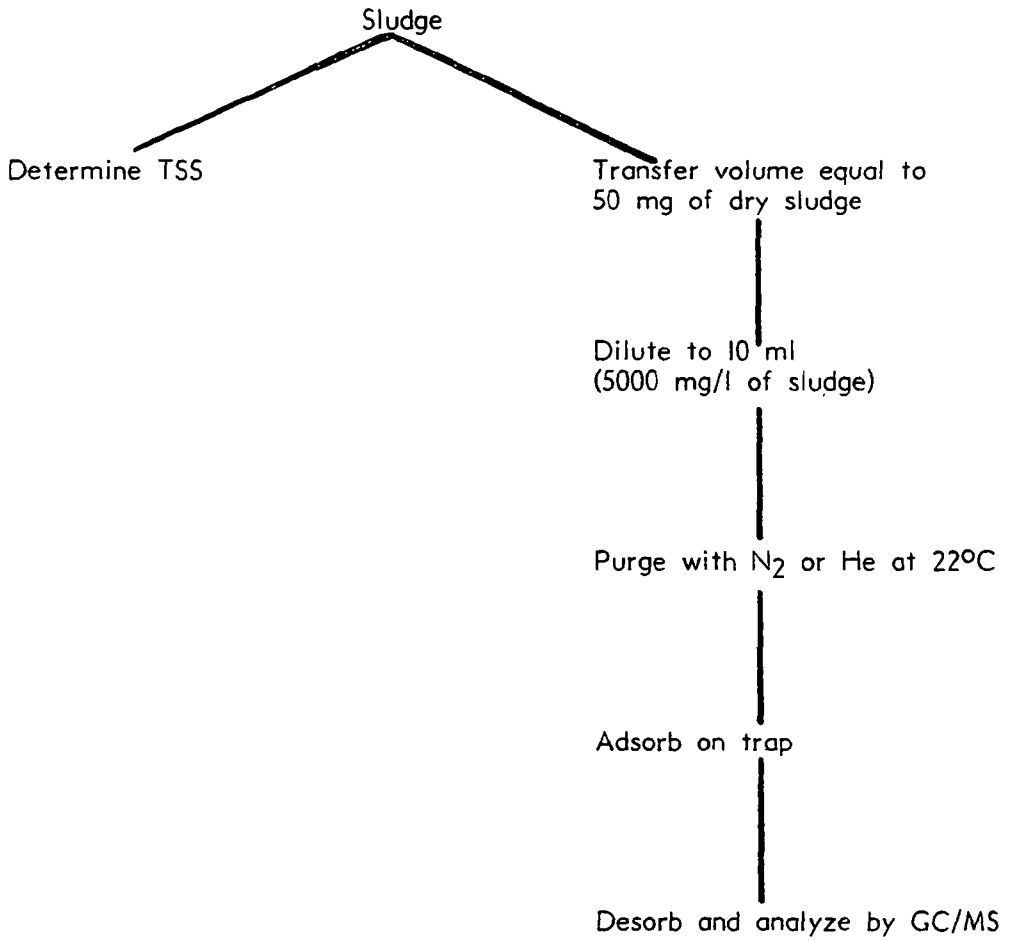

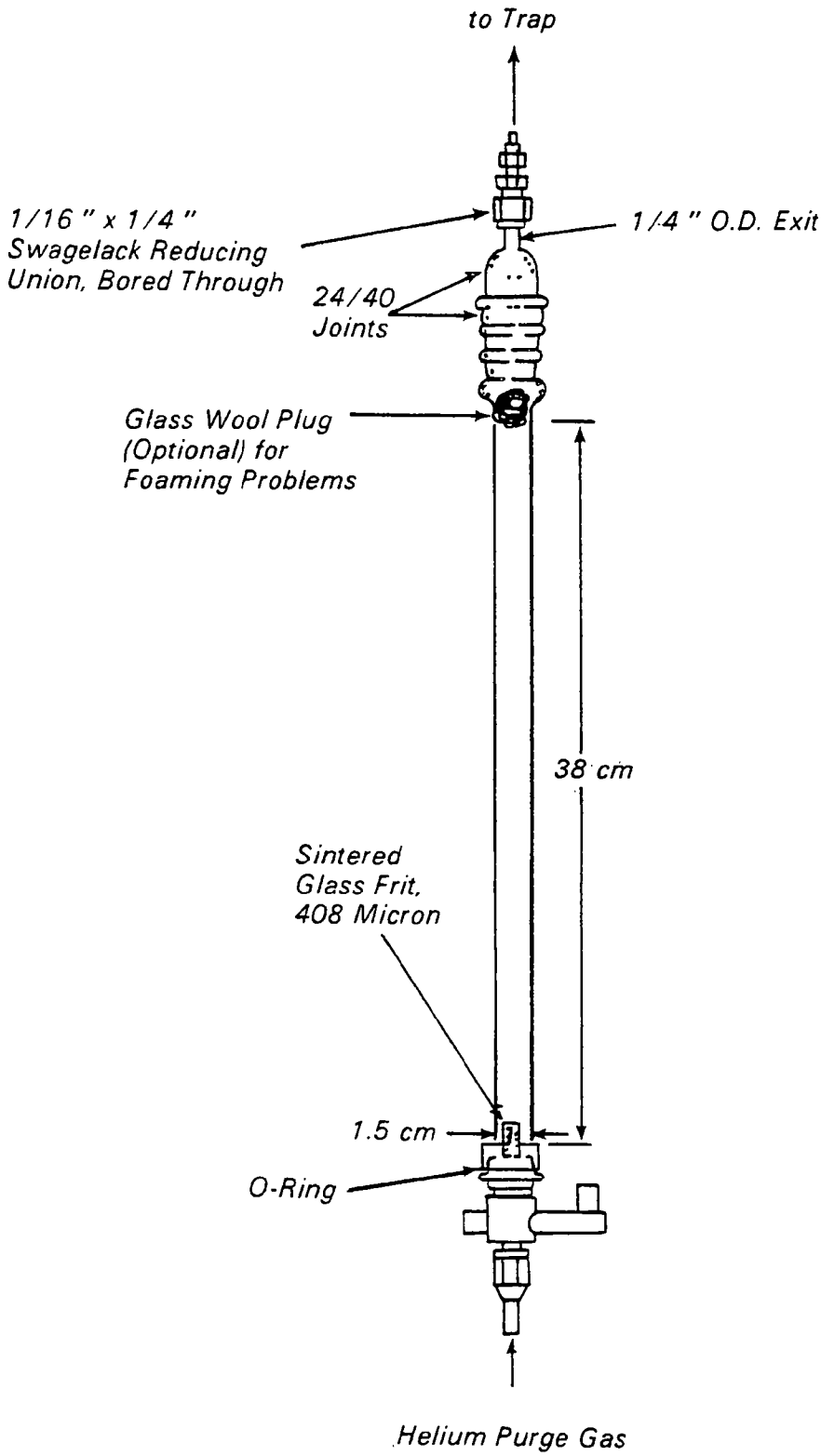

Figure 3. Sludge and purging tube.

TABLE 8. ANALYSIS OF PURGEABLE ORGANICS BY CRYOTRAP CAPILLARY GC/MS (16)

5 ml sample

↓

Purging with N_2

↓

Adsorption on Tenax Trap

↓

Desorption at 180°C with back flushing

↓

On-column Cryotrapping of desorbed organic with liquid nitrogen

↓

Release of organics and capillary GC/MS analysis
(30 m SE-54 WCOT column)
External standard method for quantitation

(Figure 4), cooled by liquid nitrogen, captures the organics during desorption from the Tenax trap. The cryotrap is then rapidly warmed to release the organics as a concentrated "plug" into the capillary GC. The improved resolution of the capillary with the cryotrap is claimed to reduce detection limits of the purge and trap method. The Tenax trap currently used by DeWalle and Chian does not contain silica gel because the gel traps sufficient water to interfere in the subsequent cryotrap-capillary GC separation. To prevent loss of organics, the trap is cooled with liquid CO_2. Increased losses of the more-volatile organics through the Tenax trap may occur. Increasing the size of the Tenax trap (17) should minimize that problem.

Both modifications of the Bellar and Lichtenberg's purge and trap method (3) are being used by the Agency to determine the purgeable organics in sludges. Further evaluation of the modifications are required to assess their detection limits. Possible future improvements to purge and trap methods to reduce the sludge matrix effects include the use of salts (Na_2SO_4 "salting out") or warming of the sample above ambient temperature to improve the purgeability of the organics. Data bases to permit statistical evaluation of these purgeable methods are now being generated by the Agency.

The high organic content of sludges prevents efficient conventional extraction for separation of the organics. While work is ongoing to evaluate continuous liquid-liquid extraction (16)(18), micro-extraction (18), and extractive steam distillation techniques (16)(18) on sludges, homogenization-centrifuge extraction and modified soxhlet techniques (21) have demonstrated efficient extraction capabilities. The homogenization-centrifuge technique has been adopted in the Agency's interim procedures for the analysis of sludges (20). The heavy organic loads extracted by the method necessitates extensive separation and clean-up of the extract.

The principal classes of organic interferences (16)(21) extracted from raw municipal wastewater and sludge samples are:

- Lipids
- Fatty acids
- Saturated hydrocarbons

In the sludge samples the heavy amounts of interferences overwhelm both the GC and the mass spectrometer. These interferences must, therefore, be reduced in the extract fractions before injection into the GC/MS system in order to permit analysis.

Three principal conventional approaches are available for this reduction:

- Acid/base separation
- Molecular size separation (gel permeation chromatography)
- Polarity separation (silica gel chromatography, etc.)

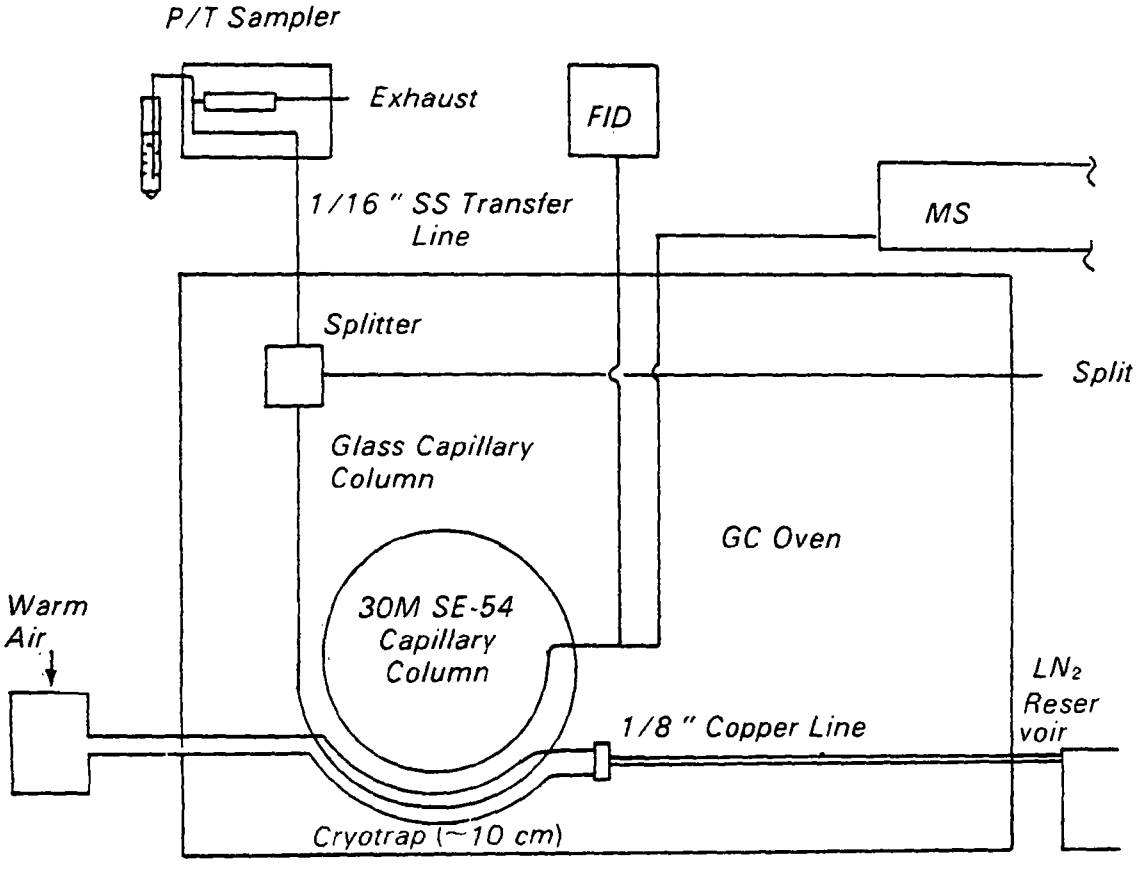

Figure 4. Schematic of VOA analysis instrumentation using cryogenic trapping and capillary GC/MS separation.

The acid/base separation is the fundamental separation approach behind the Agency's basic methodology (2). In the basic methodology, base/neutral extraction followed by acid extraction divides the amount of interferences between acid and base extracts, separates the base/neutrals from the acids and thus "reduces" the interference in each fraction injected into the GC/MS system. Acid/base separation however, may be applied at many points in a separation scheme to remove or separate acid compounds from neutrals or bases in a complex extract.

Molecular size separation is especially effective in removing the lipids and large fatty acids and large hydrocarbons from the extract (Figure 5). These materials apparently thermally decompose in the GC system and create very complex GC chromatograms. Heavy loads of these materials will also reduce column life for the GC columns and increase mass spectrometer down-time.

Polarity separation with silica gel (21) or florisil (16) is used to separate the saturated hydrocarbons from the aromatic or polar priority organics. A cesium silicate approach (16), has also been employed to separate the acids (phenols) from the base/neutrals priority organics and from neutral interferences.

The separation or "clean-up" approaches have been assembled in various combinations to reduce the interferences from extracted municipal sludges. The earliest exploratory methods for separating and analyzing the extractable organics, the base/neutrals and acids (21), and the special subclass of pesticides (22), are summarized in Tables 9 and 10.

The first method (21) for analysis of base/neutrals and acid classes in sludges consisted of three separate procedures on individual aliquots of the sludge sample. The bases (benzidines) were successfully determined by an HPLC procedure (Table 9) using the electrochemical detector. Satisfactory recoveries of the bases were achieved at spiking levels of 6 µg/l in distilled water (Table 11) and in sludge matrices.

The procedure for the neutral organics (Table 9) featured homogenization-centrifuge extraction under acid conditions to prevent solvent separation difficulties from some sludges; sodium hydroxide washing of the extract to remove fatty acids and other acids from the extract; gel permeation chromatography (GPC) into two extract fractions to remove large molecules (lipids and large aliphatic hydrocarbons); and silica gel chromatography of the first GPC fraction to separate the small aliphatic hydrocarbons from the small neutral priority organics. The combined extracts were then analyzed by capillary GC/MS.

This procedure for neutrals performed quite satisfactorily in distilled water spiked at 25-50 µg/l (Table 11) of individual organics; it missed only one organic. Applied at the same spiking levels (2.5-5.0 µg in 100 ml sample) in sludge matrices, the procedure missed 9 of the neutrals altogether; the procedure also exhibited poor precision between replicates and variable recoveries for many of the other neutrals. Thus, at the low spiking levels (2.5-5.0 µg per 100 ml of wet sludge), the approach was not satisfactory in sludge matrices. Unfortunately, the approach has not been tested at higher spiking levels. The matrix detection limits for this procedure for each neutral in distilled water and sludge matrices have not been determined.

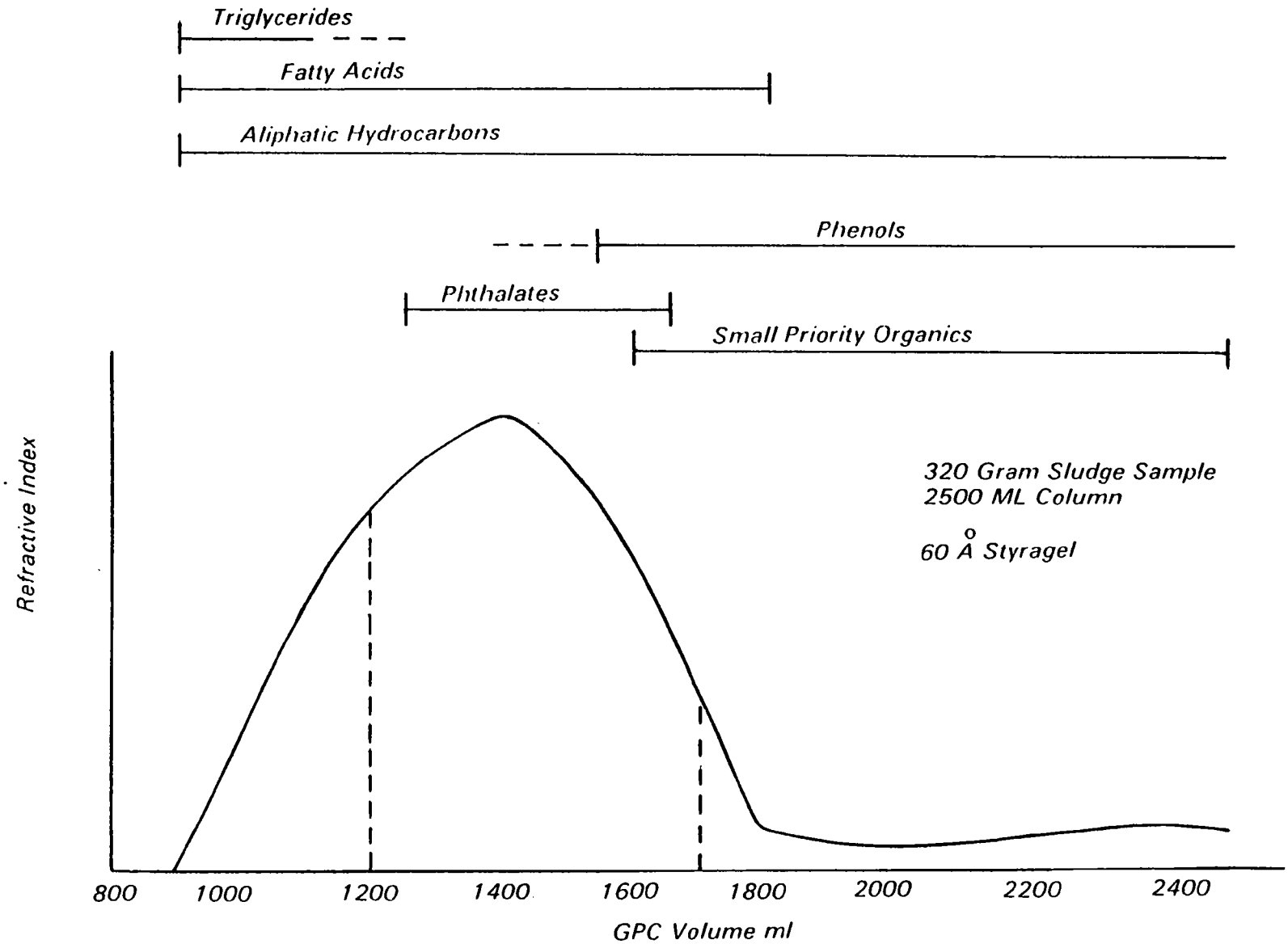

Figure 5. GPC Separation of organics.

TABLE 9. ANALYSIS OF EXTRACTABLE ORGANICS IN SLUDGES (21)

Sludge Sample		
100 g wet weight	100 g wet weight	10 g wet weight
Extraction with CH_2Cl_2 at pH 2	Extraction with CH_2Cl_2 at pH 2	0.1 m phosphate buffer pH 7
GPC clean-up with Biobeads S-X8	Washing with 0.1N NaOH	Extraction with chloroform
Extraction with 2.0N NaOH	Fractionation with Biobeads S-X8	Extraction with $2NH_2SO_4$
Acidification of aqueous phase	Collection of two fractions GPC-1 and GPC-2	Neutralization of Aqueous Extract
Extraction with CH_2Cl_2	Clean-up GPC-1 with silica gel chromatography	Extraction with chloroform
Concentration	Combination and concentration	Dilution with 0.1 acetate buffer
GC/MS analysis of phenols	GC/MS analysis of neutrals	HPLC analysis of benzidines with electrochemical detector

TABLE 10. PROCEDURE FOR ANALYSIS OF PESTICIDES AND PCB'S IN SLUDGES (22)

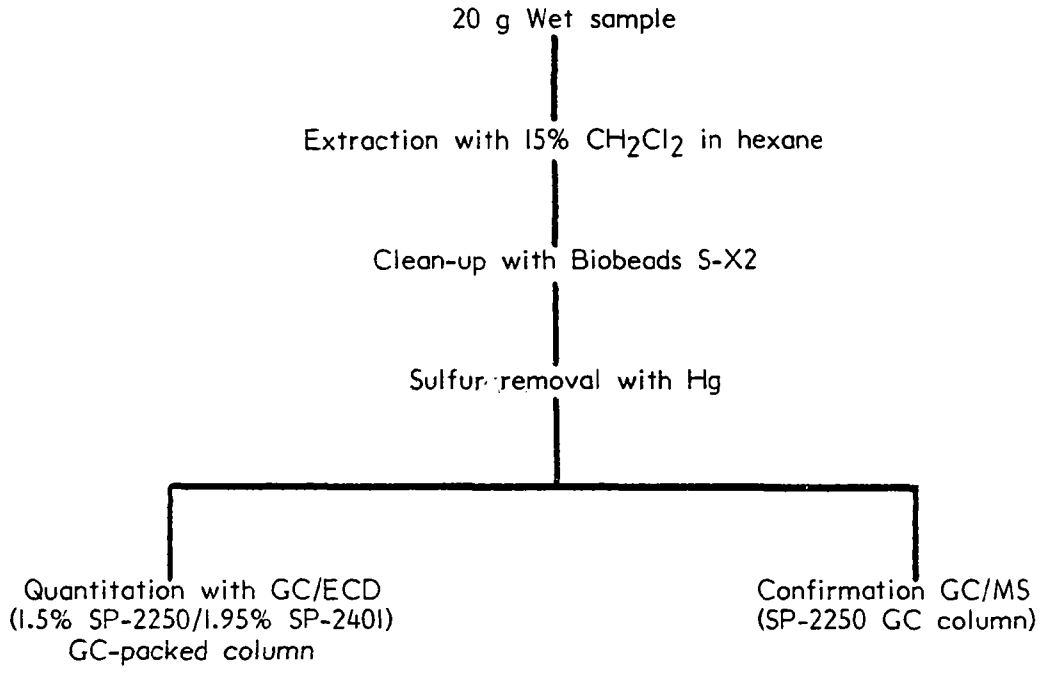

TABLE II. RECOVERY OF PRIORITY POLLUTANTS FROM WATER (21)

Compound[a]	Amount Added, µg/100 ml	Amount Recovered, µg/100 ml, in Given Sample: Unspiked 1	Unspiked 2	Unspiked 3	Unspiked Avg.	Spiked 1	Spiked 2	Spiked 3	Spiked Avg.	Average Recovery,[b] %
Neutrals										
Bis-(2-chloroethyl) ether	5.0	ND[e]	ND	ND	--	3.3	1.3	(f)	2.3	46
1,3-Dichlorobenzene	5.0	ND	ND	ND	--	3.9	2.8	(f)	3.4	67
1,4-Dichlorobenzene	5.0	ND	ND	ND	--	3.9	2.8	(f)	3.4	67
1,2-Dichlorobenzene	5.0	ND	ND	ND	--	6.0	2.9	(f)	4.5	89
Bis-(2-chloroisopropyl) ether	5.0	ND	ND	ND	--	5.4	1.1	(f)	3.3	65
N-Nitrosodipropylamine	5.0	ND	ND	ND	--	6.8	1.1	(f)	4.0	79
Nitrobenzene	5.0	ND	ND	ND	--	4.8	4.3	(f)	4.6	91
Bis-(2-chloroethoxy) methane	5.0	ND	ND	ND	--	3.9	2.6	(f)	3.3	65
1,2,4-Trichlorobenzene	5.0	ND	ND	ND	--	5.0	3.5	(f)	4.3	85
Naphthalene	5.0	0.4	ND	0.3	0.2	6.7	4.0	(f)	5.4	104
Hexachlorobutadiene	5.0	ND	ND	ND	--	2.8	4.7	(f)	3.8	75
2-Chloronaphthalene	5.0	ND	ND	ND	--	6.6	3.2	(f)	4.9	98
2,6-Dinitrotoluene	5.0	ND	ND	ND	--	5.6	ND	(f)	2.8	56
Dimethyl phthalate	5.0	0.2	ND	ND	0.1	9.0	5.6	(f)	7.3	144
Acenaphthylene	5.0	ND	ND	ND	--	7.3	5.5	(f)	6.4	128
Acenaphthene	5.0	ND	ND	ND	--	7.4	4.7	(f)	6.1	121
2,4-Dinitrotoluene	5.0	ND	ND	ND	--	5.3	ND	(f)	2.7	54
Diethyl phthalate	5.0	0.8	0.2	0.6	0.5	7.3	5.8	(f)	6.6	121
Fluorene	5.0	ND	ND	ND	--	7.4	5.1	(f)	6.3	125
4-Chlorophenyl phenyl ether	5.0	ND	ND	ND	--	4.5	4.1	(f)	4.3	86
N-Nitrosodiphenylamine	5.0	ND	ND	ND	--	2.0	5.7	(f)	3.9	77
4-Bromophenyl phenyl ether	5.0	ND	ND	ND	--	5.1	6.2	(f)	5.7	113
Hexachlorobenzene	5.0	ND	ND	ND	--	5.7	6.2	(f)	6.0	119
Phenanthrene	5.0	0.6	ND	ND	0.2	5.6	6.3	(f)	6.0	116
Anthracene	5.0	ND	ND	ND	--	7.6	7.8	(f)	7.7	154
Di-n-butyl phthalate	5.0	3.7	0.6	0.9	1.7	10.9	6.6	(f)	8.8	142
Fluoranthene	2.5	0.3	ND	ND	0.1	2.1	3.4	(f)	2.8	108
Pyrene	2.5	0.4	ND	ND	0.1	2.5	4.6	(f)	3.6	140
Butylbenzyl phthalate	5.0	27	0.3	1.7	0.7	7.4	2.6	(f)	5.0	86
Chrysene	2.5	ND	ND	ND	--	2.5	3.2	(f)	2.9	114

(continued)

TABLE II (continued).

Compound[a]	Amount Added, µg/100 ml	Amount Recovered, µg/100 ml, in Given Sample								Average Recovery,[b] %
		Unspiked				Spiked				
		1	2	3	Avg.	1	2	3	Avg.	
Benzo(a)anthracene	5.0	ND	ND	ND	--	2.5	3.2	(f)	2.9	114
Bis(2-ethylhexyl)phthalate	5.0	0.9	0.1	0.9	0.6	11.2	0.3	(f)	5.8	104
Di-n-octyl phthalate	5.0	0.4	ND	0.3	0.2	8.3	0.4	(f)	4.4	84
Benzo(b)fluoranthene	2.5	ND	ND	NC	--	2.5	2.2	(f)	2.4	96
Benzo(k)fluoranthene	2.5	ND	ND	ND	--	2.5	2.2	(f)	2.4	96
Benzo(a)pyrene	2.5	ND	ND	ND	--	2.2	1.6	(f)	1.9	76
Benzo(g,h,i)perylene	2.5	ND	ND	ND	--	0.6	0.9	(f)	0.8	30
Indeno(1,2,3-cd)pyrene	2.5	ND	ND	ND	--	2.0	0.3	(f)	1.2	48
Dibenzo(a,h)anthracene	2.5	ND	ND	ND	--	ND	ND	(f)	--	-
Acids										
2-Chlorophenol[c]	5.0	ND	ND	ND	--	0.7	0.9	ND	0.5	10
Phenol[c]	6.0	0.9	ND	ND	0.3	2.7	ND	ND	0.9	10
2,4-Dimethylphenol[c]	5.0	ND	ND	ND	--	ND	ND	ND	--	--
2,4-Dichlorophenol[c]	5.0	ND	ND	ND	--	4.0	0.6	2.2	2.3	46
2,4,6-Trichlorophenol[d]	5.0	ND	ND	ND	--	4.8	ND	4.5	3.1	62
2-Nitrophenol[d]	5.0	ND	ND	ND	--	ND	ND	ND	--	--
4-Chloromethylphenol[c]	5.0	ND	ND	ND	--	6.4	ND	8.6	5.0	100
4-Nitrophenol[d]	5.0	ND	ND	ND	--	ND	ND	ND	--	--
4,6-Dinitro-o-cresol[d]	5.0	ND	ND	ND	--	5.5	ND	ND	1.9	38
Pentachlorophenol[d]	5.0	ND	ND	ND	--	4.7	0.1	3.1	2.6	52
2-4-Dinitrophenol[d]	5.0	ND	ND	ND	--	ND	ND	ND	--	--
Bases										
Benzidine	0.6	ND	ND	ND	--	0.4	0.4	0.4	0.4	67
3,3-Dichlorobenzidine	0.6	ND	ND	ND	--	0.4	0.6	0.6	0.5	83

[a]The priority pollutant standards used were purchased from Supelco, Inc.

[b]$\frac{\text{(Avg. recovered from spiked sample) - (Avg. recovered from unspiked sample)}}{\text{Amount added}} \times 100$

[c]Determined as the free phenol

[d]Determined as the methyl ester

[e]Not detected

[f]Neutral fraction lost

The acid procedure (Table 9) for measurement of extractables in sludge consisted of homogenization-centrifuge extraction at acidic pH with methylene chloride; gel permeation chromatography to remove the large interferences; back extraction of the GPC extract with sodium hydroxide to separate the acids from neutral interferences; reextraction by methylene chloride of the acids from the acidified NaOH solution, and GC/MS analysis for identification and quantitation. The procedure produced unsatisfactory results (Table 11) with variable recoveries; it also missed organics, especially the nitrophenols, in both distilled water and sludge matrices at low spiking levels of 50 µg/l (5.0 µg per 100 ml of sample) of each individual phenol. With the large variability in phenol analysis in field laboratories, reevaluation of the procedure at higher spiking levels is merited.

The initial development (Table 10) for analysis of pesticides and PCB's in sludges (22) featured homogenization-centrifuge extraction with 15% methylene chloride in hexane at neutral pH; gel permeation chromatography to remove the large interferences; addition of mercury to remove sulfur interferences; and quantitation of the chlorinated organics using gas chromatography and an electron capture detector. In the procedure, the chlorinated organics were then confirmed by GC/MS analysis.

The recoveries by this procedure were very satisfactory for all priority pesticides and representative PCB's in both distilled water and in sludge matrices. Typical results are shown in Table 12 for several single component pesticides and in Table 13 for multi-component chlordane. Indeed, the method provided quantitation and GC/MS confirmation of the single component pesticides to about 0.3 mg of component/kg of sludge solids (for a 5% sludge, 15 µg/l of individual pesticide).

The initial development work on measurement of extractable organics in sludge has evolved into two alternative approaches. The Interim Method for Measurement of Organic Priority Pollutants in Sludges (Table 13) from the EPA's Environmental Monitoring and Support Laboratory (20) consists of a base/neutral extraction followed by an acid extraction, both with methylene chloride solvent using the homogenization-centrifuge technique; gel permeation chromatography for separation of the high molecular weight interferences; and GC/MS identification and quantitation of the extractable organics. The approach analyzes the pesticide and PCB subclass within the other base/neutrals and thus provides a consolidated analytical method for the extractables. The method is being used in the Agency's 40-city survey of toxics in municipal wastewater treatment.

The second approach is being developed by DeWalle and Chian (16) for the EPA's Municipal Environmental Research Laboratory's 25-city research survey of toxics in municipal wastewater treatment systems. The methodology (Table 14) uses an acid/neutral extraction followed by a base extraction; gel permeation chromatography (GPC) of the acid/neutral extract into three fractions, one of which is a discard containing the large interferences; florisil chromatography of one GPC fraction for separation of the saturated hydrocarbons from those priority neutrals in the fraction; and cesium silicate for separation of the acids (phenols) from the priority neutrals in the second GPC fraction. The phenol fraction from the silicate separation may be derivatized with *CH_2N_2 before GC/MS analysis for phenols, or

*CH_2N_2 is explosive, toxic, and carcinogenic.

TABLE 12. RECOVERIES FOR PESTICIDES AND PCB's (22)

Single component Pesticides μg (% Recovery)

Spike Level (μg/20g)	Replicate	-βHC	-βHC	-βHC	Heptachlor Epoxide	DDE	DDD	DDT
0	1	0.02	0.36	0.33	0.14	0.04	0.05	0.30
0	2	0.01	0.30	0.31	0.13	0.03	0.06	0.28
	Avg	0.02	0.33	0.32	0.14	0.04	0.06	0.29
0.3	1	0.29	0.51	0.50	0.38	0.29	0.33	0.62
0.3	2	0.36	0.65	0.57	0.51	0.35	0.40	0.73
0.3	3	0.26	0.48	0.45	0.31	0.24	0.26	0.39
	Avg†	0.28 (93)	0.22 (73)	0.19 (63)	0.26 (87)	0.25 (83)	0.33 (90)	0.29 (97)
1.0	1	0.96	1.12	1.17	1.04	0.97	1.06	1.38
1.0	2	0.94	1.05	1.13	0.95	0.85	0.91	1.17
1.0	3	0.92	1.11	1.10	0.98	0.96	1.06	1.08
	Avg†	0.92 (92)	0.76 (76)	0.81 (81)	0.85 (85)	0.89 (89)	0.95 (95)	0.92 (92)

(continued)

TABLE 12 (continued).

Spike Level (µg/20g)	Replicate	Chlordane Peak #1	#2	#4	#5
0	1	3.6	2.2	4.0	4.5
0	2	3.8	2.5	5.0	5.3
	Avg	3.7	2.4	4.5	4.9
3	1	5.4	4.1	6.7	7.0
3	2	6.1	4.5	7.8	7.7
3	3	6.3	4.7	7.5	7.8
	Avg†	2.2 (73)	2.0 (67)	2.8 (93)	2.6 (87)
10	1	11.1	9.7	12.2	12.6
10	2	-**	-	-	-
10	3	12.5	10.7	13.4	13.6
	Avg	8.1 (81)	7.8 (78)	8.3 (83)	8.2 (82)

*From digested sludge.

**Sample lost during processing.

†Corrected for unspiked response.

TABLE 13. INTERIM PROCEDURE FOR ANALYSIS OF EXTRACTABLE ORGANICS IN SLUDGES (20)

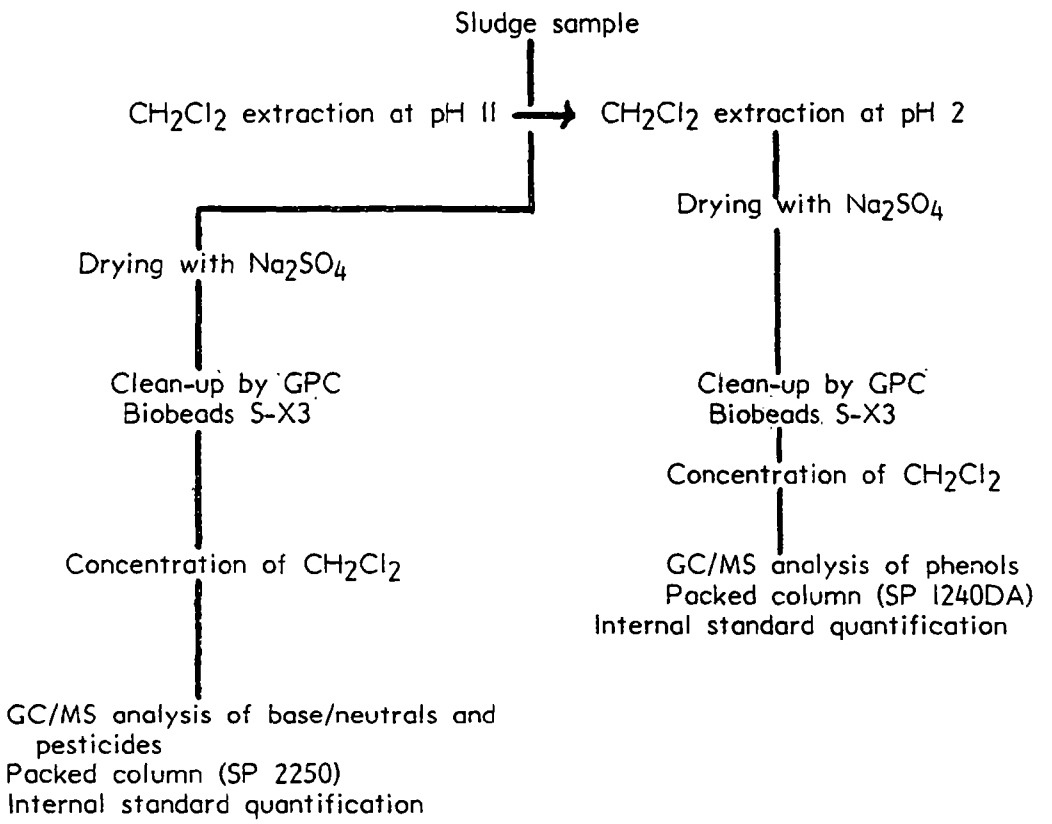

TABLE 14. ANALYSIS OF EXTRACTABLE ORGANICS (16) WITH CLEAN-UP AND CAPILLARY GC/MS

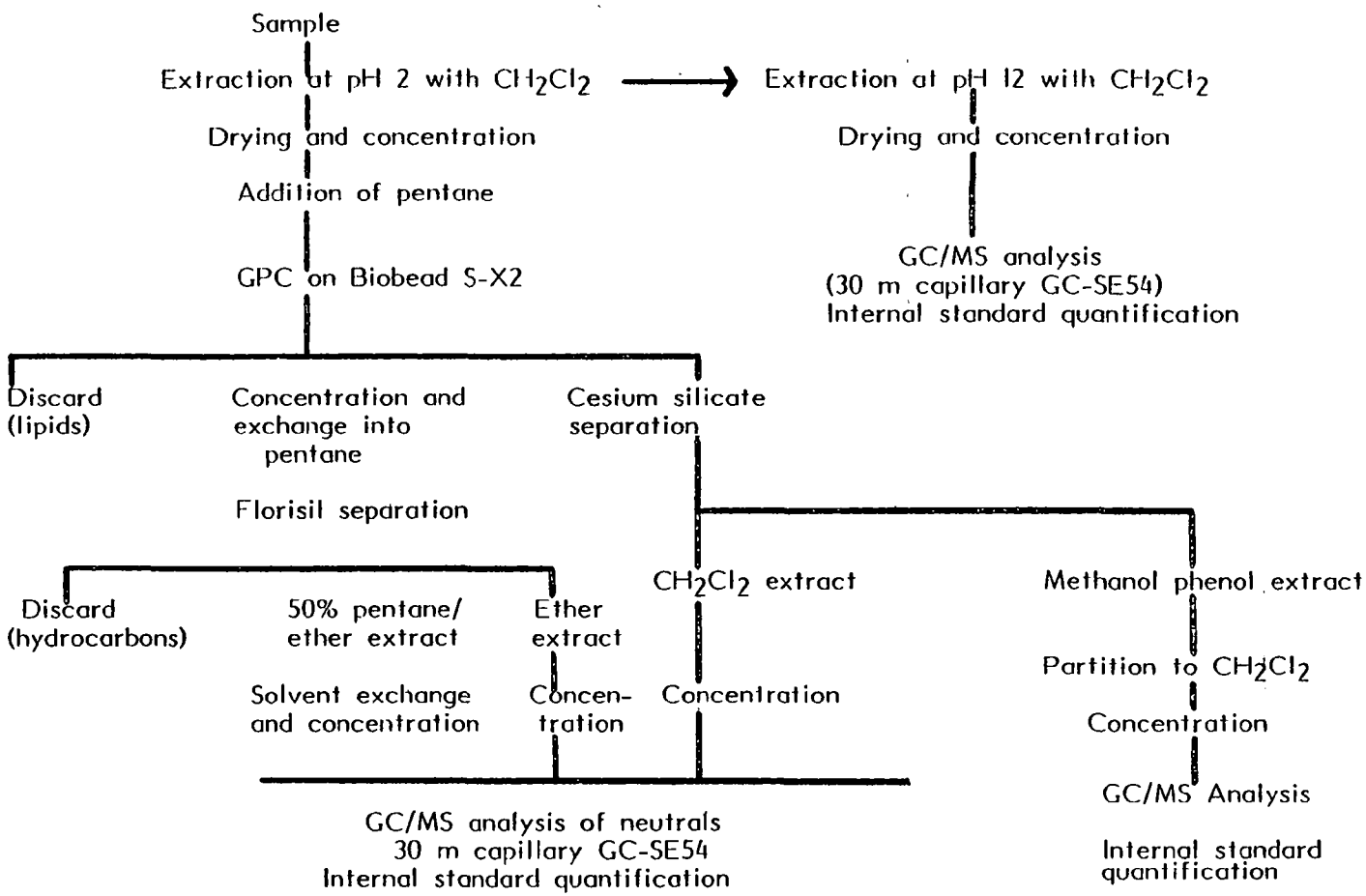

else analyzed by fused silica capillary GC without derivatization. The method produces three neutral fractions which may be combined into a single extract before GC/MS analysis, or else may be analyzed separately. The complex method uses capillary GC/MS techniques for final detection. The pesticides and PCB's are analyzed in the neutral fraction. Alternative extraction techniques under evaluation include homogenization-centrifugation, liquid/liquid extraction and extractive steam distillation.

Neither method is fully satisfactory for all of the priority extractables in all the highly variable sludge matrices (16)(18). Losses of individual organics will occur either through reaction with the matrix or losses in the separation processes. At the present time, insufficient data has been assembled to provide estimations of the detection limits or the statistical recoveries of the priority organics in the variable sludge matrices.

While sludge sample matrices do reduce analytical effectiveness, such samples typically represent concentration increases by the treatment system ranging from approximately 30 for a 1 percent primary sludge to 150 for a 5 percent sludge. As an example, a 10 µg/l toxic concentration in the incoming wastewaters, if transferred quantitatively into the primary sludge, would provide 300 to 1,500 µg/l of that toxic in the sludge. For dewatered sludges, the concentration increases are even higher. Thus, on an influent mass basis. the higher detection limits likely in the sludge matrices do not necessarily preclude meaningful evaluation of the fate and distribution of these toxics as they pass through the municipal treatment system.

SECTION 5

REDUCTION OF DETECTION LIMITS IN MUNICIPAL WASTEWATER

In the municipal treatment system, the individual industrial and commercial discharges of the organics may be diluted many fold by the total volume of the municipal wastewater. Because of bioaccumulation in the aquatic food chain, the total mass (rather than the actual concentrations) of selected specific toxics in industrial or commercial discharges may represent an undesirable treatment-plant output of the specific organic. In large municipal systems, a number of such outputs may occur. The high dilution in municipal systems, however, can reduce the concentration of individual specific toxics such that the undesirable environmental input, when measured in the municipal flow may escape detection. Thus, in municipal treatment systems, meaningful measurement of at least those specific organics which persist and can bioaccumulate requires methodology with maximum sensitivity and lowest possible detection limits.

The approaches to reducing the detection limits below those in the EPA's basic GC/MS methodology principally are (a) the improvement of the resolution and detection sensitivity of the GC/MS system; and (b) the application of conventional separation and clean-up methods to reduce interferences in sample matrices.

The EPA methodology (2) indicates that capillary GC systems can replace packed columns. The capillary columns provide superior GC resolution. They typically reduce the base of the GC peaks by at least a factor of 5; thus correspondingly increasing the peak heights and decreasing the GC detection limits. According to column manufacturers (23)(24), capillary GC columns (Table 15), however, have reduced loading capacity compared to packed columns. They also require longer operating time and increased data handling capacity which increases analytical costs. Since the GC/MS system with extractive ion monitoring successfully discriminates among many poorly GC-resolved inputs and since the reduced loading may negate detection-limit gains in GC resolution of the complex sample, use of the capillary column may not be cost effective.

DeWalle and Chian (16) have reported low concentrations for extractable organics (~ 1 ppb) in municipal wastewaters using capillary columns, but the methods used included additional clean-up procedures. At the present state-of-art level the net improvement in detection limits and quantitation capabilities using capillary GC columns in place of packed GC columns for a given procedure has not been quantitatively demonstrated on municipal wastewater treatment samples. In the future, a compromise between sample loading and GC separation efficiency through use of SCOT or micro packed GC columns may offer the best overall improvement.

TABLE 15. GC COLUMN CHARACTERISTICS (23)(24)

Type of Column	Inside Diameter	Max. Sample Volume	Max. Amount One Component	No. of Eff. Plates Per Meter
WCOT (narrow)	.25mm	0.5 µl	2-50 ng	3000-5000
WCOT (wide)	.5 mm	.1 µl	5-100 ng	1500-2500
SCOT	.5 mm	3 µl	30-300 ng	600-2000
Micro-packed	.6 mm	3 µl	30-300 ng	2500-400
Packed	2.0 mm		0 µg	2500

An advance in hardware potentially offers an improvement in the sensitivity of the mass spectrometer. The equipment called the pulsed positive-ion negative-ion chemical ionization source and detector (25) (PPINICI system) permits low level (> ppb) detection of selected (usually halogenated) organics in the chemical ionization operating mode. This MS operating mode does not have the large spectral library of the electron impact operating mode and does not function satisfactorily on some priority organics such as the polynuclear aromatic hydrocarbons (PAH's). The approach, however, is very valuable in evaluating low level halogenated organics produced by chlorination of wastewaters or sludges.

A further value from the PPINICI hardware is the potential improvement in mass spectrometer sensitivity from the use of the PPINICI's electron multipliers in the conventional electron impact operating mode (26). The future value of this increased MS sensitivity for conventional EI analyses of priority pollutants, however, has not been fully determined.

The classical approach of separation and clean-up to improve detection limits represents a balance between improved resolution and detectability through reduction in the interferences in the sample matrix and losses of the desired specific organics during the repetitive sample handling of the separation or clean-up procedures. The more important separations and clean-up procedures are those described earlier in the section on analyses of sludge samples. These techniques can be applied to reduce detection limits for the GC/MS methodology on wastewaters.

Improvements over the basic methodology have been tested on municipal wastewaters. Concentrations of purgeable organics in municipal wastewaters have been measured (11) at less than 1 µg/l by increasing the sample volume of the purging apparatus. The size of Tenax GC trap (17) can be increased, and charcoal (7) can be added to the trap to prevent breakthroughs of the purgeable organics. Cooling (16) of the Tenax trap has also been employed to prevent breakthrough of the organics. Concentrations of pesticides and PCB's have been measured in municipal wastewaters (5)(27), with separate extraction and florisil clean-up procedures, at about 1 µg/l for single-component pesticides. Application of GPC clean-up approaches to wastewaters should provide at least as much improvement as florisil procedures.

DeWalle and Chian (16) have applied their full separation and clean-up methods in the Agency's 25-city research survey to both wastewaters and sludges. The initial data indicates measurement of the purgeables at less than 1 µg/l and the extractables at about 1 µg/l in the wastewaters. DeWalle and Chian estimate detection limits for their method on sludges at about 5-10 µg/l of wet sludge.

SECTION 6

ANALYSIS OF AERATION SAMPLES

In municipal wastewater plants, aeration in the grit chambers and in the activated sludge system strips volatile organics from the wastewater. Pellizari and Little (17) have developed a method to sample the air from aeration processes and to measure the priority organic content of the air sample. The method includes techniques similar to the classical purge and trap procedure (3) for measuring purgeables in water. A specially designed sampler covers a small area (usually 1 ft^2) of the aeration chamber and extends into the liquid to prevent ambient air diffusion into the sampled aeration stream. The flow rate of the air from the sampler (Figure 6) is measured, split to appropriate known volumes and passed through a Tenax GC trap to remove the priority organics. The organics are desorbed into a liquid nitrogen cryotrap and then focused and released into a GC/MS system for analysis. The method uses a packed GC column.

The Tenax GC traps are sized to prevent breakthrough of the organics. The work indicates that purgeable organics spiked at low levels (~ 1-10 μg/l) are not quantitatively purgeable by aeration from raw wastewaters and activated sludge mixed liquors. The matrix in the wastewater or mixed liquor appears to adsorb or react with the organics. The organics in the air stream, however, are reasonably measured by the method. The detection limit is generally between 1-10 ng/l of air.

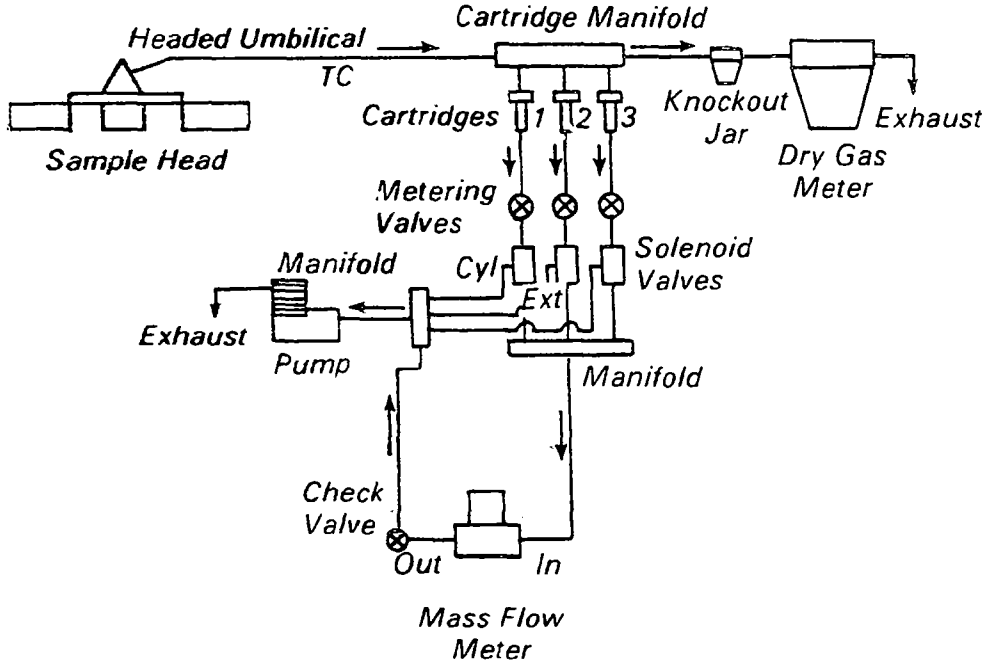

Figure 6. Sampler system for aeration.

REFERENCES

1. Natural Resources Defense Council (NRDC) et al. vs. Train 8 ERC 2120 (DDC 1976).

2. FEDERAL REGISTER, 44 (233), December 3, 1979, "Guidelines Establishing Test Procedures for Analysis of Pollutants, Proposed Regulation," pp. 69526-69558.

3. Bellar, T. A., and Lichtenberg, J. J., "Determining Volatile Organics at Microgram-per-liter levels by Gas Chromatography," Jour. AWWA 66, 739-744, (1974).

4. FEDERAL REGISTER 38 (125) 17318 (1973).

5. Caragay, A. B. and Levins, P. L. "Evaluation of Protocols for Pesticides and PCB's in Raw Wastewater," EPA-600/2-79-166, Municipal Environmental Research Laboratory, U. S. EPA, Cincinnati, Ohio.

6. "Definition and Procedure for the Determination of the Method. Detection Limit." Revision 1.7, U. S. EPA Environmental Monitoring and Support Laboratory, Cincinnati, Ohio.

7. Levins, P. L., et al., "Source of Toxic Pollutants in Influents to Sewage Treatment Plants," U. S. EPA draft report, Office of Water Planning and Standards, Washington, D.C., Nov. 1979.

8. Kleopfer, R. D., Dias, J. R. and Fairless, B. J., "Priority Pollutant Methodology Quality Assurance Review," U. S. EPA Region VII Laboratory, Kansas City, Kansas 66115.

9. Munch, D. J. Division of Technical Support, Office of Water Program, U. S. EPA, Cincinnati, Ohio, Private Communication.

10. "Seminar on Analytical Methods for Priority Pollutants," Proceedings U. S. EPA, Denver, Colorado, Nov. 1977.

11. Pressley, T. A., Municipal Environmental Research Laboratory, U. S. EPA, Cincinnati, Private Communication.

12. Development and Application of Test Procedures for Specific Organic Toxic Substances in Wastewater Category 7-Benzidines. Report for EPA Contract 68-03-2624 (in preparation).

13. FEDERAL REGISTER 44 (233) December 3, 1979, "Guidelines Establishing Test Procedures for Analysis of Pollutants, Proposed Regulations" pp. 6948-6949.

14. Wise, R. H., U.S. EPA, Cincinnati, unpublished data.

15. Wise, R. H. and Eichelberger, L. E., U. S. EPA Cincinnati, unpublished data.

16. DeWalle, F. and Chian, E., "Presence of Priority Organics in Sewage and their Removal in Sewage Treatment Plants." First Annual Report, Grant 806102, U. S. EPA, Municipal Environmental Research Laboratory, Cincinnati, Ohio.

17. Pellizzari, E. D. and Little, L., "Collection and Analysis of Purgeable Organics Emitted from Wastewater Treatment Plants," EPA-600/2-80-017, Municipal Environmental Research Laboratory, U. S. EPA, Cincinnati, Ohio, March 1980.

18. "Development of Analytical Test Procedures for the Measurement of Organic Priority Pollutants in Sludges and Sediments," Progress Reports I-II, Contract No. 68-05-2695, U. S. EPA, Environmental Monitoring and Support Laboratory, Cincinnati, Ohio.

19. "The Analysis of Trihalomethanes in Drinking Water by Liquid Extraction Method 501.2, U. S. EPA, Environmental Monitoring and Support Laboratory, Cincinnati, Ohio, May 15, 1979.

20. "Interim Methods for the Measurement of Organic Priority Pollutants in Sludge," U. S. EPA, Environmental Monitoring and Support Laboratory, Cincinnati, Ohio. September 1979.

21. Warner, J. S. et al., "Analytical Procedures for Determining Organic Priority Pollutants in Municipal Sludge," EPA-600/2-80-030, Municipal Environmental Research Laboratory, U. S. EPA, Cincinnati, Ohio, March 1980.

22. Rodriguez, C. F., Mc Mahon, W. A., and Thomas, R. E., "Method Development for Determination of Polychlorinated Hydrocarbons in Municipal Sludge," EPA-600/2-80-029, Environmental Monitoring and Support Laboratory and Municipal Environmental Research Laboratory, U. S. EPA, Cincinnati, Ohio, March 1980.

23. Capillary GC Columns, Chrompack-Nederland.

24. High Resolution Gas Chromatography. Editor, R. R. Freeman, Hewlett-Packard Monograph, December 1979.

25. Hunt, D. F., Stafford, G. C., Crow, F. W. and Russell, J., Anal. Chem., 48, 2098 (1976).

26. Eichelberger, U.S. EPA, Cincinnati, Ohio, Private Communication.

27. "Survey of Two Municipal Wastewater Treatment Plants for Toxic Substances," Wastewater Research Division, Municipal Environmental Research Laboratory, Cincinnati, Ohio, March 1977.