PB84-178425

Multielemental Analytical Techniques for Hazardous Waste Analysis The State-of-the-Art

Montgomery (James M.), Inc., Pasadena, CA

Prepared for

Environmental Monitoring Systems Lab.
Las Vegas, NV

Apr 84

U.S. Department of Commerce
National Technical Information Service
NTIS

PB84-178425

EPA-600/4-84-028
April 1984

MULTIELEMENTAL ANALYTICAL TECHNIQUES FOR HAZARDOUS WASTE ANALYSIS: The State-of-the-Art

by

J. A. Oppenheimer, A. D. Eaton, and L. Y. C. Leong
James M. Montgomery, Consulting Engineers, Inc.
555 E. Walnut Street
Pasadena, California 91101

and

Thomas A. Hinners
Quality Assurance Division
Environmental Monitoring Systems Laboratory
Las Vegas, Nevada 89114

#1549644

Contract No. 68-03-3076

Project Officer

Thomas A. Hinners
Quality Assurance Division
Environmental Monitoring Systems Laboratory
Las Vegas, Nevada 89114

ENVIRONMENTAL MONITORING SYSTEMS LABORATORY
OFFICE OF RESEARCH AND DEVELOPMENT
U.S. ENVIRONMENTAL PROTECTION AGENCY
LAS VEGAS, NEVADA 89114

REPRODUCED BY
NATIONAL TECHNICAL
INFORMATION SERVICE
U.S. DEPARTMENT OF COMMERCE
SPRINGFIELD, VA 22161

TECHNICAL REPORT DATA
(Please read Instructions on the reverse before completing)

1. REPORT NO. EPA-600/4-84-028	2.	3. RECIPIENT'S ACCESSION NO. PB84 178425
4. TITLE AND SUBTITLE MULTIELEMENTAL ANALYTICAL TECHNIQUES FOR HAZARDOUS WASTE ANALYSIS: The State-of-the-Art		5. REPORT DATE April 1984
		6. PERFORMING ORGANIZATION CODE
7. AUTHOR(S) J. A. Oppenheimer, A. D. Eaton, and L. Y. C. Leong, James M. Montgomery, Consulting Engineers, Inc., and Thomas A. Hinners, EMSL-LV*		8. PERFORMING ORGANIZATION REPORT NO.
9. PERFORMING ORGANIZATION NAME AND ADDRESS James M. Montgomery, Consulting Engineers, Inc. 555 E. Walnut Street Pasadena, California 91101		10. PROGRAM ELEMENT NO. ABSD1A
		11. CONTRACT/GRANT NO. Contract No. 68-03-3076
12. SPONSORING AGENCY NAME AND ADDRESS U.S. Environmental Protection Agency--Las Vegas, NV Office of Research and Development Environmental Monitoring Systems Laboratory Las Vegas, Nevada 89114		13. TYPE OF REPORT AND PERIOD COVERED Project, 6/81-6/82
		14. SPONSORING AGENCY CODE EPA/600/07

15. SUPPLEMENTARY NOTES *Quality Assurance Division
Environmental Monitoring Systems Laboratory
Las Vegas, Nevada 89114

16. ABSTRACT

Based on a comprehensive review of the literature, the multielemental techniques of inductively coupled plasma optical emission spectroscopy (ICP), x-ray fluorescence (XRF) and instrumental neutron activation analysis (INAA) have been compared for the determination of antimony, arsenic, barium, beryllium, cadmium, chromium, copper, lead, mercury, nickel, selenium, silver, thallium and zinc in hazardous waste matrices. These particular elements were chosen because they are on the list for classifying a waste as hazardous or on EPA's Priority Pollutant list. Each technique is discussed with respect to theory, anticipated interferences, correction techniques, precision, accuracy, detection limits and cost. This literature review indicates that there has not been sufficient analytical work on complex matrices to fully compare these three techniques for many of the priority pollutant elements. For those elements with a sufficient database to compare precision and accuracy by the three techniques (arsenic, barium, chromium, lead, nickel and zinc), ICP has the advantages of lower detection limits and higher precision, whereas XRF may be very useful as a preliminary screening technique due to its ability to provide rapid semi-quantitative data even at trace levels. XRF and ICP have significant cost advantages over INAA, requiring much less capital expenditure and lower labor costs.

17. KEY WORDS AND DOCUMENT ANALYSIS

a. DESCRIPTORS	b. IDENTIFIERS/OPEN ENDED TERMS	c. COSATI Field/Group

18. DISTRIBUTION STATEMENT RELEASE TO PUBLIC	19. SECURITY CLASS (This Report) UNCLASSIFIED	21. NO. OF PAGES 112
	20. SECURITY CLASS (This page) UNCLASSIFIED	22. PRICE

EPA Form 2220-1 (Rev. 4-77) PREVIOUS EDITION IS OBSOLETE

NOTICE

This report has been reviewed in accordance with the U.S. Environmental Protection Agency's peer and administrative review policies and approved for presentation and publication. Mention of trade names or commercial products does not constitute endorsement or recommendation for use.

ABSTRACT

Based on a comprehensive review of the literature, the multielemental techniques of inductively coupled plasma optical emission spectroscopy (ICP), x-ray fluorescence (XRF) and instrumental neutron activation analysis (INAA) have been compared for the analysis of antimony, arsenic, barium, beryllium, cadmium, chromium, copper, lead, mercury, nickel, selenium, silver, thallium and zinc in hazardous waste matrices. These particular elements were chosen because they are on the list for classifying a waste as hazardous or on EPA's Priority Pollutant list. Each technique is discussed with respect to theory, anticipated interferences and correction techniques, observed precision and accuracy for simple and complex matrices, detection limits and cost.

The literature review demonstrates there has not been sufficient analytical work on complex matrices to fully compare these three methods for many of the priority pollutant elements. For those elements with a sufficient database to compare precision and accuracy by the three methods (arsenic, barium, chromium, lead, nickel and zinc) ICP has the advantages of lower detection limits and precision, whereas XRF may be very useful as a preliminary screening technique due to its ability to provide rapid semi-quantitative data even at trace levels. XRF and ICP have significant cost advantages over INAA, requiring much less capital expenditure and lower labor costs.

CONTENTS

Abstract iii
Figures viii
Tables ix
Abbreviations and Symbols xi

Introduction 1
Conclusions 2
Recommendations 3
Multielemental Methods 4
Background 4
Available Methods 4
Isotope Dilution Mass Spectrometry (IDMS) 4
Spark Source Mass Spectrometry (SSMS) 5
Multielemental Atomic Absorption (MAAS) 5
Voltammetry (VM) 5
Inductively Coupled Plasma Optical Emission Spectroscopy (ICP) . . . 6
Instrumental Neutron Activation Analysis (INAA) 6
X-Ray Fluorescence (XRF) 7
Methods of Choice 7
Comparison of Methods 7
Literature Search 7
Data Management 8
Data Selection 9
Project Approach 9
Detection Limits 11

Inductively Coupled Plasma Optical Emission Spectroscopy (ICP) 14
Theory 14
Instrumentation 15
Pneumatic Nebulizers 15
Ultrasonic Nebulizers 16
Spectrometers 17
Polychromators (Simultaneous Systems) 17
Monochromators (Sequential Systems) 18
Comparison of Simultaneous and Sequential Systems 18
Detection Limits 19
Accuracy and Precision 20
Reported Accuracy and Precision 21
Sources of Error 23
Spectral Interferences 23
Background Shifts 25
Chemical Interferences 25
Physical Interferences 25
Instrumental Drift 25

Preceding page blank

CONTENTS (Continued)

Correction Methods 26
Alternate Lines 26
Correction Factors. 26
Background Correction 26
Sample Preparation 26
Fusion. 27
Acid Digestion. 28
Costs. 28
Capital Investment. 28
Expendables 29
Operator Skill. 29
Sample Throughput 29
Commercial Availability 29

X-Ray Fluorescence Spectroscopy (XRF) 31
Theory 31
Instrumentation. 33
Wavelength Dispersive 33
Energy Dispersive 33
Detection Limits 34
Theory. 34
Observed Detection Limits 34
Accuracy and Precision 35
Sources of Error 35
Sample Preparation. 37
Interferences 37
Correction Methods 40
Matrix Matching 40
Correction Factors. 40
Modified Correction Factors 41
Transmission and Fluorescence 41
Scattered Radiation 42
True Background 42
Other Methods 43
Summary of Correction Methods 43
Sample Preparation 44
Liquids 44
Solids. 46
Costs. 47
Capital Investment. 47
Expendables 47
Sample Throughput 48
Operator Skill. 48
Commercial Services 48

CONTENTS (Continued)

Instrumental Neutron Activation Analysis (INAA) 49
Theory 49
Instrumentation. 50
Detection Limits 51
Accuracy and Precision 54
Sources of Error 54
Spectral Interferences. 54
Absorption Errors 56
Dead-Time Loss. 56
Counting Statistics Errors. 56
Correction Methods 58
Sample Preparation 58
Costs. 58
Capital Investment. 58
Expendables 59
Sample Throughput 59
Operator Skill. 59
Commercial Services 59
Comparison. 60
Introduction 60
Detection Limits 60
Accuracy and Precision 61
Interferences. 62
Flexibility. 65
Sample Preparation 66
Cost 66
Throughput 66
Availability. 66
Conclusions 66
References. 68

Appendices

A. Instrument User Questionnaire 86
B. List of Individuals Receiving the Instrument User Questionnaire. 89

FIGURES

Number		Page
1	Database sorted by technique, detection limit (DL), precision (P) and accuracy (A)	10
2	Concentric pneumatic nebulizer	15
3	Flow shear pneumatic nebulizer	17
4	Ultrasonic nebulizer	18
5	Example of a polychromator-based ICP system	19
6	Example of a monochromator-based ICP system	20
7	Direct spectral overlap of As and Cd emission lines	24
8	Partial spectral overlap of Cd and Al emission lines	24
9	Intensity versus wavelength of x-rays transmitted through an absorber	32
10	Spectral and background radiation interferences in XRF	38

TABLES

Number		Page
1	Comparison Summary of Instrumental Methods	8
2	Number of Records in Database Sorted by Technique and Element	11
3	Measurement Limits for a Normal Distribution	13
4	Median of Reported ICP Detection Limits for Simple Aqueous Matrices and Complex Matrices	21
5	Mean Precision and Accuracy by ICP	22
6	Spectral Interference Factors Reported for ICP	27
7	Measurement Limits for a Poisson Distribution	34
8	Median of Reported XRF Detection Limits	35
9	Mean Precision and Accuracy by XRF	36
10	Spectral Interferences in XRF	39
11	Limiting Assumptions for Using Backscatter in XRF Matrix Corrections	44
12	Matrix Absorption Correction Techniques for XRF	45
13	Nuclides Available in INAA for the Selected Elements	51
14	Medium of Reported INAA Detection Limits	53
15	Mean Precision and Accuracy by INAA	55
16	Principal Interferents in INAA for the Selected Elements	57
17	Ranking Comparison of ICP, XRF and INAA	60
18	Comparison of Median Detection Limits for ICP, XRF and INAA	61
19	Percentage of Cases with Acceptable Precision	62

TABLES (Continued)

		Page
20	Percentage of Cases with Acceptable Accuracy	63
21	Ranking of Techniques by Element	64
22	Ranking of Error Sources for the Techniques.	64
23	Analytical Definitions of Random and Systematic Errors	65

LIST OF ABBREVIATIONS AND SYMBOLS

ABBREVIATIONS

IDMS	--	isotope dilution mass spectrometry
SSMS	--	spark source mass spectrometry
MAAS	--	multielement atomic absorption spectroscopy
VM	--	voltammetry
ASV	--	anodic stripping voltammetry
ICP	--	inductively coupled plasma optical emission spectroscopy
XRF	--	x-ray fluorescence
INAA	--	instrumental neutron activation analysis
AAS	--	atomic absorption spectroscopy
CL	--	critical level
DL	--	detection limit
QL	--	quantification limit
RSD	--	relative standard deviation
IUPAC	--	International Union of Pure and Applied Chemistry
R	--	reaction cross section in INAA
NA	--	number of target nuclei in INAA

SYMBOLS

σ	--	standard deviation
s	--	signal
b	--	blank
α	--	type 1 hypothesis testing error (false positive) in statistics
β	--	type 2 hypothesis testing error (false negative) in statistics
K_α	--	abscissa of standardized normal distribution corresponding to probability level $1-\alpha$ in detection limit discussions
$K\alpha$	--	emission in XRF for electron transition from L atomic shell to K atomic shell
$K\beta$	--	emission in XRF for electron transition from M atomic shell to K atomic shell
$L\alpha$	--	emission in XRF for electron transition from M atomic shell to L_3 atomic subshells
K_β	--	abscissa of standardized normal distribution corresponding to probability level $1-\beta$ in detection limit discussions
μ_m	--	mass absorption coefficient
ϕ	--	neutron flux density
T(1/2)	--	elemental half-life
λ_B	--	decay constant of radionuclide

SECTION 1

INTRODUCTION

Information on the pollutant content of wastes is required to properly assess the hazard and the need for waste management or for remedial action. Multielemental analytical techniques are attractive as the means to obtain inorganic content information on wastes rapidly and/or economically. Although multielemental techniques are widely used, complex wastes and contaminated soil present the potential for interferences not normally encountered. The elements antimony (Sb), arsenic (As), barium (Ba), beryllium (Be), cadmium (Cd), copper (Cu), chromium (Cr), lead (Pb), mercury (Hg), nickel (Ni), selenium (Se), silver (Ag), thallium (Tl), and zinc (Zn) are identified in federal publications as pollutants of special concern.

The present work is a literature evaluation of currently available multielemental techniques in order to compare the advantages and limitations for the analysis of the specified elements in hazardous wastes or in contaminated soils. The currently available multielemental methods are isotope dilution mass spectrometry, spark source mass spectrometry, multielement atomic absorption spectroscopy, polarography, inductively coupled plasma optical emission spectroscopy, instrumental neutron activation analysis, and x-ray fluorescence spectroscopy. Each technique is evaluated in terms of accuracy, precision, sensitivity, severity of matrix interferences and economic factors.

SECTION 2

CONCLUSIONS

The results of a preliminary evaluation of all currently available multi-elemental methods indicated that inductively coupled plasma optical emission spectroscopy (ICP), x-ray fluorescence (XRF), and instrumental neutron activation analysis (INAA) are most amenable to development as routine methodologies for analysis of complex matrices for the 14 elements.

A rigorous comparison of these three techniques was made on the basis of detection limits, precision, accuracy, freedom from interferences, flexibility, sample preparation, cost, thoughput, and availability. All three techniques have the capacity for detecting numerous elements in wastes at concentrations greater than 100 ppm. XRF could be useful as a preliminary screening technique since it produces semi-quantitative results in 5 minutes or less. Overall, ICP appears to be the best method for determining these particular elements in hazardous waste matrices, but our recommendation is not conclusive because it is based only on published data.

SECTION 3

RECOMMENDATION

A more relevant comparison of the three techniques should be based on measurements for the 14 elements in the same hazardous waste samples. Use of published data does not provide an adequate database for comparison of the methods because very little work has been published on multielemental analysis of hazardous waste matrices for this set of elements. The database is, therefore, insufficient for many of these elements; and data for the three methodologies are not directly comparable because they are derived from different matrices and based on different detection limit definitions. The database may also be inherently biased because published data are usually superior to data derived from routine applications.

SECTION 4

MULTIELEMENTAL METHODS

BACKGROUND

Congress enacted the Resource Conservation and Recovery Act in 1976 to protect the public and the environment from improper disposal of hazardous wastes. Under this legislation the EPA is required to develop a nationwide program to regulate hazardous waste practices. EPA is required under Section 3001 of this Act to identify all solid wastes which must be managed as hazardous wastes and to identify the specific characteristics of each hazardous waste. Included in this monitoring program are measurements for 14 elements consisting of the 13 inorganic priority pollutants (Ag, As, Be, Cd, Cr, Cu, Hg, Ni, Pb, Sb, Se, Tl, Zn) and Ba. Barium has been classified as a hazardous constituent by the EPA.

Presently, several multielemental techniques are candidates for simultaneously determining these pollutants in hazardous waste samples. Development of routine multielemental techniques for hazardous wastes could provide rapid analyses and substantial economic savings. It has not been clearly demonstrated whether the time savings (from multielemental capability) outweigh the capital investments and analytical limitations that may arise from attempting to simultaneously determine 14 elements in complex matrices. For example, many multielemental techniques still cannot be used to analyze solid samples directly without preparation; and a single preparation technique may not be adequate for all 14 elements of interest. This report assesses the potential of currently available multielemental techniques for determining the specified pollutant elements in hazardous waste samples. Each technique is evaluated in terms of accuracy, precision, detection limits, severity of matrix interferences and economic factors.

AVAILABLE METHODS

The currently available multielemental methods are isotope dilution mass spectrometry, spark source mass spectrometry, multielemental atomic absorption spectroscopy, polarography, inductively coupled plasma optical emission spectroscopy, instrumental neutron activation analysis, and x-ray fluorescence spectroscopy.

ISOTOPE DILUTION MASS SPECTROMETRY (IDMS)

In isotope dilution mass spectrometry the concentration of an element is determined by observing the change which occurs in its natural isotopic composition upon the addition of isotopic tracer (of that same element) which has an

artificially altered composition. IDMS exhibits good precision and interferences occur only when isotopes of different elements have the same mass number. Separation of interfering elements can usually be achieved within the ion source if these elements have different volatilities. The major drawbacks of this technique are the very expensive capital investment, the need to introduce samples into an evacuated chamber and the long analysis time (compared to other available methods). It cannot determine the 17 monoisotopic elements, which include the pollutant As; and the working concentration range is narrow because it is a ratio method. When the concentration of the element of interest in the sample is low, the composition of the mixture containing both sample and tracer will approach that of pure tracer and become almost indistinguishable from it. When elemental concentration in the sample is high, the mixture composition approaches that of pure sample and once again creates the problem of indistinguishability. The usable concentration range for each particular element is dependent on the isotopic ratios naturally occuring for that element. When the natural ratio is close to unity, as in the case of Ag, the working range is extremely short.

SPARK SOURCE MASS SPECTROMETRY (SSMS)

In spark source mass spectrometry an electrode, which is partially or completely composed of sample, is subjected to a pulsed radio-frequency voltage. The high voltage spark which is produced causes localized heating of the electrode. The sample then vaporizes as atoms or simple ions which are accelerated through an ion gun and mass analyzed. Elements are identified by the mass-to-charge ratio of their ions and concentration is determined from the ion current. The main advantage of spark source mass spectrometry is the extreme specificity and low detection limits of the technique for almost all elements. Its major limitations are essentially the same as those for isotope dilution mass spectrometry; namely, the high cost of instrumentation, requirement for a skilled technician, and long analysis time. In addition, electrode preparation would probably require digestion of a waste and adsorption onto an electrode. Another potential source of trouble is the use of an extremely small sample size, which may lead to errors in accuracy if the analyzed aliquot is not representative of the bulk sample.

MULTIELEMENTAL ATOMIC ABSORPTION SPECTROSCOPY (MAAS)

Multielemental atomic absorption spectroscopy is based on conventional atomic absorption spectroscopy which has been modified to achieve simultaneous element measurements through use of a continuum source and an echelle monochromator modified for wavelength modulated detection The main advantage of this technique is its flexibility, maintaining the advantages of conventional AAS with respect to specificity and freedom from interferences. Its major limitations are a restricted linear working range, poor detection limits compared to AAS, and lack of commercial availability (which would lead to large capital expenditures in setting up a laboratory for MAAS).

VOLTAMMETRY (VM)

Voltammetry is an electro-analytical multielemental technique which consists of a cell containing a dropping-mercury indicator electrode, a reference

electrode, a counter electrode and the solution of interest. When a gradually changing voltage is applied to this cell, ions are reduced at the indicator electrode in the form of a mercury amalgam. This reduction process results in the production of a cell current which is directly proportional to the solution concentration of the element of interest when the current is diffusion controlled. Element identification is achieved by observing the potential at which the current is half the magnitude of the diffusion controlled current (half-wave potential). Very low detection limits can be achieved utilizing a specialized form of voltammetry known as anodic stripping voltammetry (ASV), but it is only applicable to a few metals and sample pretreatment is required when determining total metal as opposed to labile complexes. The major drawback to voltammetry is that element identification is strongly dependent on a knowledge of the matrix composition because the element half-wave potential shifts in response to other species present in the sample matrix. Therefore, highly skilled technicians are required to adequately perform ASV. Furthermore, multielemental determinations can only be made if the half-wave potentials of the metals of interest are sufficiently far apart for the current to be measured accurately. These types of severe interference problems indicate that voltammetry does not possess adequate selectivity to be useful as a multielemental technique for the determination of metals in complex matrices.

INDUCTIVELY COUPLED PLASMA OPTICAL EMISSION SPECTROSCOPY (ICP)

Inductively coupled plasma is a form of optical emission spectroscopy which utilizes argon plasma as the excitation source. This transforms the sample into electronically excited ions and atoms which emit photons as they deactivate to their ground state. The quanta are sorted by wavelength in a spectrophotometer and the resulting emission is detected photoelectrically. Signal response is proportional to concentration level and each element emits light of a characteristic wavelength. This technique possesses several advantages. Linearity can be expected over 4-6 orders of magnitude, detection limits are low, costs are moderate, analysis time is fairly rapid, and the requirement that samples be introduced as liquids ensures obtaining results which will truly represent the bulk sample. The primary disadvantages are matrix interferences and the fact that solid samples cannot be analyzed directly. Dissolution of the sample introduces the potential for contamination or loss of analyte, and decreases detection limits.

INSTRUMENTAL NEUTRON ACTIVATION ANALYSIS (INAA)

Instrumental neutron activation analysis is a radiochemical method in which the sample is exposed to a neutron flux and the induced radioactivity is determined using gamma ray spectrometry. The advantages of this technique are its nondestructive nature, minimum sample manipulation requirements and low detection limits. The main limitations are matrix interferences, required access to a neutron source with associated high capital costs, the fact that not all elements are amenable to this type of analysis, and the possibility that the small solid specimen which is analyzed may not be homogeneous and representative of the bulk sample.

X-RAY FLUORESCENCE (XRF)

X-ray fluorescence is a form of x-ray spectroscopy in which a sample is bombarded with x-rays and inner orbital electrons are ejected from atoms within the sample. The resulting excited atoms dissipate energy by filling these vacancies with electrons from higher energy levels and emitting characteristic x-ray photons. This secondary emission of x-rays is referred to as fluorescence and because only certain emissions occur, the x-ray spectral line is indicative of the element present. Element concentration is deduced from the x-ray count rate of a characteristic line. The advantages of this method are basically the same as those of neutron activation analysis. XRF is nondestructive, allows for direct analysis of solid samples, and exhibits low detection limits. Disadvantages of this methodology are the severity of matrix effects, difficulty in analyzing liquid samples directly, and the fact that elements with atomic number less than 10 cannot be determined.

METHODS OF CHOICE

Table 1 summarizes the advantages and disadvantages of each of the potential analytical methods. Isotope dilution mass spectrometry and spark source mass spectrometry possess unacceptable economic factors of large capital cost, expensive labor costs, and lengthy analysis time. Multielemental atomic absorption spectroscopy is not currently available commercially and has not been fully investigated. Polarography lacks sufficient selectivity to be developed as a method for routine multielemental analyses of complicated matrices.

ICP, INAA and XRF appear to be the three most viable currently available multielemental methods which could be developed as routine methodologies for determining the specified elements in hazardous wastes.

COMPARISON OF METHODS

As a result of the conclusions reached in the preliminary evaluation, the next sections of this report will provide an extensive comparison of ICP, INAA, and XRF as methodologies for determining the specified elements in hazardous wastes. This comparison is based on analytical data obtained from a thorough literature search and from replies to a questionnaire sent out to users of the various techniques. The questionnaire is shown in Appendix A. The comparison provides an assessment of each technique with respect to analytical capabilities and limitations, detection limits, precision and accuracy, complexity of sample preparation, availability of commercial services and cost.

Literature Search

A thorough literature search was accomplished with the assistance of the Lockheed computer system DIALOG which enables the user to search selected abstract files. The files searched included Chemical Abstracts, NTIS, Compendex (collection of engineering journals), Agricola (collection of agricultural journals), Foundation Grants Index, Dissertation Abstracts, Enviroline (collection of environmentally oriented journals), Scisearch, Pollution Abstracts, SSIE Current Research, and Conference Papers Index. More than 50 different

TABLE 1. COMPARISON SUMMARY OF INSTRUMENTAL METHODS
(+=advantage, -=disadvantage)

	MAAS	AAS	ICP	XRF	INAA	IDMS	SSMS	V
Minimal Operator Skill Required	+	+	-	-	-	-	-	-
Cost (Capital, Operation and Maintenance)	-	+	+	+	-	-	-	+
Detection Limits	+	+	+	-	+	+	+	+
Freedom from Interferences	+	+	+	-	+	-	+	-
Precision	+	+	+	+	+	+	-	+
Availability	-	+	+	+	-	-	-	+
Working Range	-	-	+	+	+	-	+	-
Large Number of Elements	+	-	+	+	+	-	+	-
Analysis Time	+	-	+	+	-	-	-	-

MAAS = Multielemental Atomic Absorption Spectroscopy
AAS = Atomic Absorption Spectroscopy
ICP = Inductively Coupled Plasma Optical Emission Spectroscopy
XRF = X-Ray Fluorescence
INAA = Instrumental Neutron Activation Analysis
IDMS = Isotope Dilution Mass Spectrometry
SSMS = Spark Source Mass Spectrometry
V = Voltammetry

journals and abstracts were searched. The key papers used in this review are cited in the references which follow the ICP, XRF and INAA sections.

Data Management

Introduction--

Any publication which provided information on detection limits, precision, or accuracy for any of the selected elements was included in the data management system, which was accomplished with the aid of the computer system Datatrieve on the VAX 11/780 computer. Each elemental analysis of a sample consisted of a separate record in the system so that any group of elements could be combined. Thus, a reported sample analysis could produce up to 14 records for a given methodology if an article included information on precision, accuracy, or detection limits for all 14 elements. Typically, a given journal article would produce about 10-20 records depending on the number of samples analyzed and the number of elements determined. The advantage of Datatrieve is that large amounts of data can be grouped in any fashion desired to obtain selected information; i.e., it is possible to readily examine the literature and determine which techniques provide the most information on any given element and which techniques have the best precision, accuracy or detection limits.

Data Selection

Availability of Data--

The available precision, accuracy, and detection limit data determined for any given element by ICP, INAA or XRF are summarized in Figure 1. Data for conventional (single-element) AAS was not collected and summarized because the precision, accuracy and detection limits obtained by AAS are already well established. Inherent in this summary is the assumption that the literature search was reasonably complete. Each record represents one piece of data on a given element. It becomes clear from examining this table that the number of journal articles where ICP has been used for determining the specified elements far exceeds the database available for neutron activation or x-ray fluorescence. This reflects, in part, the fact that INAA and XRF have traditionally been used to determine a different set of elements than ICP.

Table 2 provides a breakdown of the data on an element and technique basis. This provides a rapid way of comparing the available data for certain elements. For instance, a minimal amount of data was found for x-ray fluorescence analysis of Ag, Cd, Sb, Hg, Se and Tl. XRF has traditionally been used for analyses of major elements and this explains the paucity of data for these metals which typically occur at fairly low concentrations in environmental samples. For neutron activation there is a minimal amount of data available on Be, Pb or Tl because these elements do not form adequate gamma-emitting radionuclides. For ICP, little data are available for Hg or Tl because these elements can be determined to lower concentrations using cold-vapor AAS and furnace AAS (respectively), and few standard reference materials have these elements present at concentrations measurable by ICP. This database provides the basis on which subsequent comparisons of the three methodologies are made.

PROJECT APPROACH

The database can be sorted for each element to determine:

- concentration ranges which can be analyzed with adequate accuracy and precision
- levels of accuracy and precision which can be expected in complex and variable hazardous waste matrices
- obtainable detection limits in liquid and solid matrices
- types of interferences
- correction methods used
- sample preparation techniques

Following this assessment of analytical capabilities, data gathered from direct user contact and response to our questionnaire was used to estimate:

- capital expenditures
- labor costs
- supply costs
- throughput rate
- required operator skill

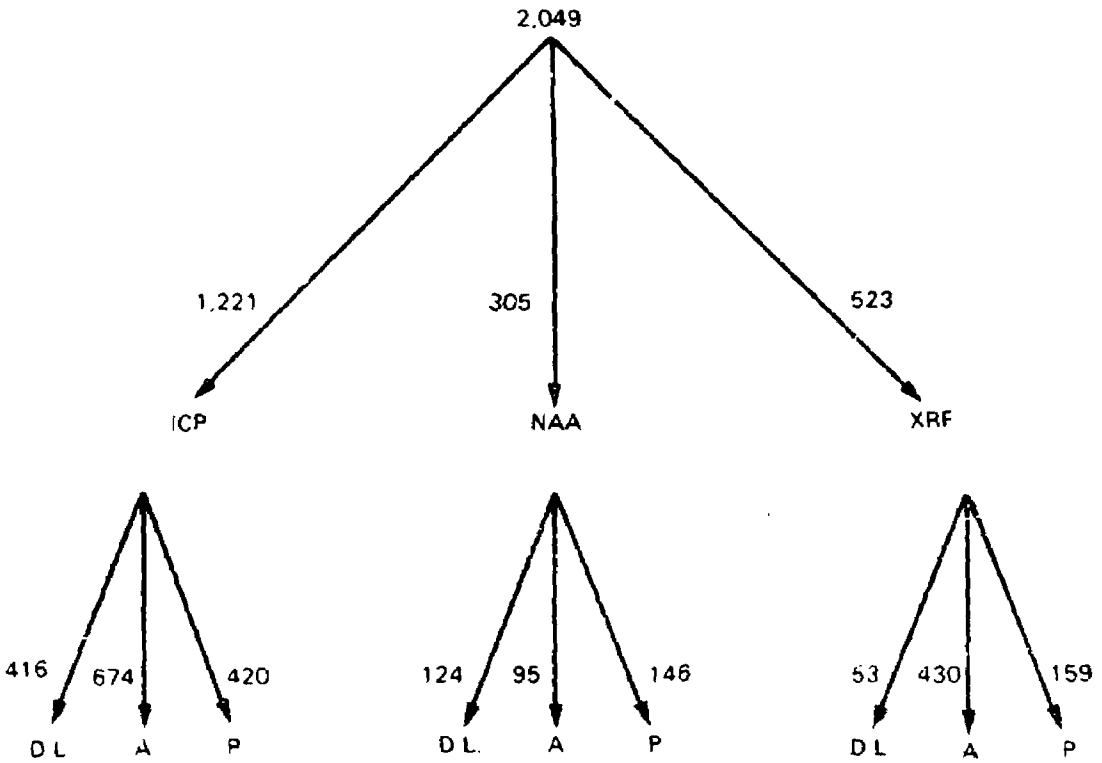

Figure 1. Database sorted by technique, detection limit (DL), precision (P) and accuracy (A).

TABLE 2. NUMBER OF RECORDS IN DATABASE SORTED BY TECHNIQUE AND ELEMENT

Element	Method			
	ICP	INAA	XRF	Total
Ag	34	10	1	45
As	50	18	11	79
Ba	87	53	82	222
Be	55	1	0	56
Cd	110	15	7	132
Cr	137	54	96	287
Cu	198	12	66	276
Hg	9	18	4	31
Ni	149	34	116	299
Pb	166	6	56	228
Sb	27	31	1	59
Se	27	18	3	48
Tl	7	0	0	7
Zn	164	35	78	277

Finally, the relative merits of each method were balanced against the availability of commercial services for the techniques and the availability or standard analytical protocols.

Thorough consideration of the analytical and economic variables for each instrumental technique should make it possible to assess the technique(s) best suited for determining the 14 specified elements in hazardous wastes. Each technique was evaluated for its potential as a screening procedure for unknown hazardous wastes as well as for its potential to produce highly accurate and precise data.

DETECTION LIMITS

In using our database to compare ICP, XRF and INAA, it became apparent that the definition of detection limit (DL) used by various workers, especially in ICP, varied tremendously. A survey of the literature reveals that a number of definitions are being used to define the detection limit. Some work is based on two or three times the standard deviation of the background noise while other papers take two or three times the standard deviation of either a low concentration standard, the ordinate intercept of the calibration regression or a matrix identical to the sample (but not containing the element of interest). This is significant in analysis of hazardous wastes where matrices can be tremendously complex and present numerous interferences. In assessing the data we have not differentiated these definitions. However, we believe it is instructive to present a statistical basis for the proper definition of detection limits so future work can be readily compared.

An excellent statistical derivation of detection limit definitions for normal and Poisson distributions is given by Currie[25] and summarized below. The critical questions asked about detection limits are the following:

1. Given an observed signal, has a true (or non-random) signal been detected?

2. What is the smallest analyte level which will dependably yield a detectable observed signal?

Using hypothesis testing, we want to minimize the error (α) of saying an observed signal indicates a true signal when a true signal is not present. Choosing the confidence one wishes to have in excluding false positives fixes the value of α. A critical level (CL) can then be determined from the chosen α value and the blank standard deviation (σ_b), equation 1.

$$CL = K\alpha \cdot \sigma_b \tag{1}$$

This critical level indicates a signal that is probably not a random event.

The inverse error (β) of saying a signal is not present when it actually is must also be minimized. Here, one wants an estimation of the true signal which will yield an observed signal which is sufficiently greater than the background noise to allow detection. The detection limit (DL) is therefore dependent on CL, β, and the detection-level standard deviation (σ_s), equation 2.

$$DL = CL + K_\beta \cdot \sigma_s \tag{2}$$

This definition allows determination of the smallest true signal which can be detected with known probabilities of false positives and false negatives. DL represents a qualitative detection limit only. A quantitative determination limit (QL) is defined in equation 3.

$$QL = K_Q \sigma_Q \tag{3}$$

The coefficient K_Q in equation 3 determines the precision level of the quantitation limit. Typically, the quantitation limit is taken as the lowest analyte level where the relative standard deviation is 10 percent (i.e., $K_Q = 10$).

The standard deviation for a net signal is given by equation 4.

$$\sigma_s^2 = \sigma_{s+b}^2 + \sigma_b^2 \tag{4}$$

where

subscript s = net signal
subscript b = blank (same matrix, no analyte present)
σ = standard deviation

If the standard deviation is approximately independent of signal level, equation 4 reduces to equation 5 for the case of paired samples and blanks. In this situation the number of sample observations and blank observations are equivalent. Equation 6 applies if the blank is well-known due to a long history of observations.

$$\sigma_s^2 = 2\sigma_b^2 \tag{5}$$

$$\sigma_s^2 = \sigma_b^2 \tag{6}$$

Table 3 summarizes the expressions which are valid for any normal distribution.

ICP-derived data follows a normal distribution and, consequently, the detection limit (recommended by Currie[25]) is (at the 95 percent confidence level) 3.3 times the standard deviation of a blank (at the 95 percent confidence level). The IUPAC recommends[35] the use of $3\sigma_b$ for detection limit determinations at the 90 percent confidence level.

XRF and INAA involve counting radiation processes which follow a Poisson rather than a normal distribution. The detection limit definition for a Poisson distribution is given in the XRF section. In the individual sections on ICP, XRF and INAA, the various detection limit definitions utilized in reporting data, and their inherent assumptions, are discussed.

TABLE 3. MEASUREMENT LIMITS FOR A NORMAL DISTRIBUTION*

	Critical Level (CL)	Detection Limit (DL)	Quantification Limit (QL)
Paired sample and blank	$2.33\,\sigma_b$	$4.65\,\sigma_b$	$14.1\,\sigma_b$
"Well-known" blank	$1.64\,\sigma_b$	$3.29\,\sigma_b$	$10\,\sigma_b$

*When $\alpha = \beta = 0.05$ (for 5 percent risks) and $X_Q = 10$.

SECTION 5

INDUCTIVELY COUPLED PLASMA OPTICAL EMISSION SPECTROSCOPY (ICP)

THEORY

Optical emission spectroscopy is a technique which involves sample absorption of energy (from a flame, spark, arc or plasma) to produce a population of excited atoms and ions which return to the ground state by emitting radiation. The wavelengths of the emitted photons are characteristic of the elements present because of the quantum mechanical rules which govern these electron transitions.

The excitation source plays an important role in the stability, detection limits and interferences of optical emission spectroscopy. Only a fraction of the atoms within a sample are excited. This fraction is dependent on the temperature of the excitation source. A high temperature will increase the population which is excited and improve the detection limits of the technique. The source should also have good stability to prevent fluctuations in the population of excited atoms and, therefore, ensure stable spectral-line intensities. Materials in the excitation source can contribute to interference effects in optical emission spectroscopy.

Historical excitation sources are either gas combustion flames or arc sources on graphite crucibles. Combustion flames contribute considerable chemical interferences due to reactions which occur with the elements contained in the flames. Arc sources on graphite crucibles have poor detection limits for a number of elements due to incomplete excitation and to consumption of the graphite by the arc source (which contributes cyanogen interference bands).

Inductively coupled plasma optical emission spectroscopy (ICP) utilizes inductive coupling of time-varying magnetic fields with an argon plasma instead of conventional gas flames. A plasma possesses the properties of a gas but contains sufficient positive ions and electrons to conduct an electric current and interact with magnetic fields. The argon is initially made conductive by the discharge of a Tesla coil which introduces seed electrons within the electric field. The induced axial magnetic fields cause the charged particles of the plasma to flow in closed annular paths. The electrons and ions meet resistance to their flow resulting in Joule heating and additional ionization. A tangentially introduced argon flow cools the walls of the quartz tubes containing the high-temperature plasma and helps sustain the plasma. A third argon flow transports the sample, as an aerosol, through the center of the annular shaped plasma where the optimum temperature range occurs.

Plasmas have several advantages over conventional gas flames in optical emission spectroscopy. Lower detection limits are obtained with plasmas than with other emission sources due to the longer residence time of the sample within the excitation zone, which has a higher temperature and much cleaner background spectrum. Atomization occurs in the high-temperature core where continuum emission is quite high, but the atoms are released downstream to a lower-temperature environment where a relatively clean background spectrum occurs. There are fewer chemical interferences due to the relatively inert atmosphere of plasmas compared to conventional flames and a much larger linear working range of four to six orders of magnitude due to the high temperature of the plasma center which prevents self-absorption effects.

INSTRUMENTATION

The instrumental components of ICP consist of a nebulizer (which aspirates the sample and generates an aerosol into the plasma) and a spectrometer (which resolves the emitted radiation). There are two different classes of nebulizers commercially available for aerosol generation and two types of spectrometers on the market.

Pneumatic Nebulizers

Pneumatic nebulizers consist of glass, or metal, capillaries where the rate of aerosol production is dependent upon the carrier-gas flow.

1. The concentric pneumatic nebulizer depicted in Figure 2 introduces the sample through an inner concentric capillary while the nebulizer argon flows through an outer tube. The constriction in the solution capillary is frequently clogged by particles that may be in the sample.

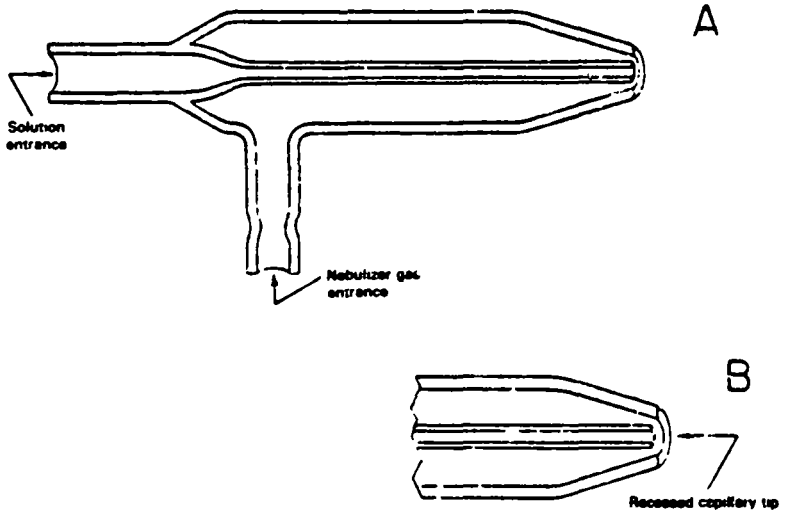

Figure 2. Concentric pneumatic nebulizer.

Two accessories (described below) are available for concentric nebulizers which reduce the problem of nebulizer clogging when samples with high-salt concentrations are analyzed. These devices involve

a) Bubbling the carrier argon through water prior to its passage through the nebulizer.

b) Rinsing the nebulizer tip by automatically injecting water through the nebulizer at the end of each analytical cycle.

These two devices permit aspiration of solutions with dissolved organic content as high as 10 percent and dissolved inorganic content as high as 20-30 percent. Aerosol carrier-gas flows are typically in the range of 1 liter/minute. Since the aerosol carrier gas is also used as the nebulizer gas when utilizing pneumatic nebulization, this required low-flow rate imposes restrictions on the dimensions of nebulizer orifices.

2. Figure 3 provides an example of a flow shear pneumatic nebulizer which operates by directing a solution by gravity flow across a surface containing the gas exit port. There is no solution capillary to clog because only the nebulizing gas goes through the exit port to create the aerosol.

3. A crossflow pneumatic nebulizer (consisting of 2 capillary tubes that terminate at 90° to each other) avoids problems of clogging by use of a sample capillary which is not constricted at the tip. This type of nebulizer can handle aqueous salt solutions with concentrations greater than 25 percent. Concentric nebulizers are generally more liable to clog at high-salt concentrations than crossflow nebulizers.

Ultrasonic Nebulizers

A second category of nebulizers are the ultrasonics depicted in Figure 4. In ultrasonic nebulization, an aerosol is produced by exposing a liquid to ultrasounds. Typically, this involves pumping a liquid onto a transfer plate. Unlike the pneumatic nebulizers, ultrasonic nebulizers allow the aerosol production and the carrier gas flow rate to vary independently thereby optimizing performance. The sample injection rate with ultrasonic nebulizers is 5-10 times higher than the rate for a crossflow pneumatic nebulizer. Ultrasonic nebulizers produce denser aerosols and more uniform particle size which lowers detection limits. Although the ultrasonic nebulizer improves the detection limits, it does have some disadvantages. Any matrix effects which are present will increase in magnitude as the sample injection rate increases and memory effects are more severe. Desolvation of the aerosol is necessary prior to its entry into the plasma and this may cause interferences. These drawbacks plus the higher cost involved in utilizing ultrasonic nebulization tend to outweigh its advantages over pneumatic nebulizers.

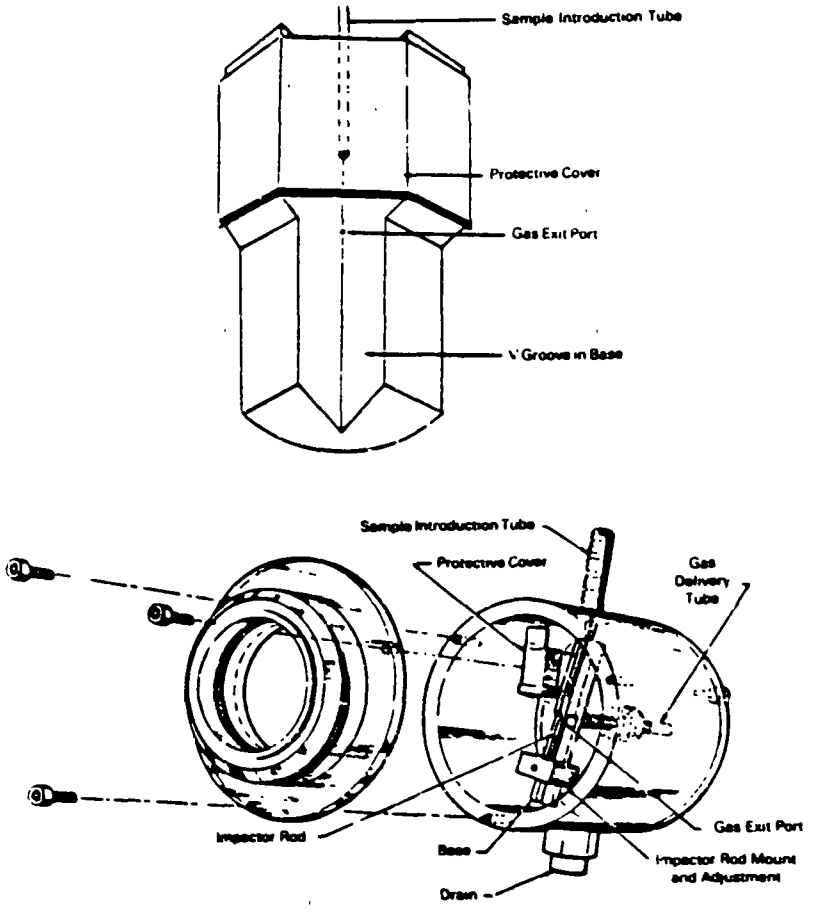

Figure 3. Flow shear pneumatic nebulizer.

Spectrometers

Two different kinds of spectrometers are available for application to multielemental determinations. The isolation and characterization of the spectral lines may be achieved either with a simultaneous polychromator or a sequential monochromator.

Polychromators (Simultaneous Systems)

A polychromator consists of an entrance slit, a diffraction grating and multiple exit slits which are located on the focal curve. Each exit slit is aligned to a specific elemental emission line and has its own photomultiplier detector and electronic channel. Commercially available polychromatic spectrometers are usually equipped with channels for 40-50 emission lines (Figure 5).

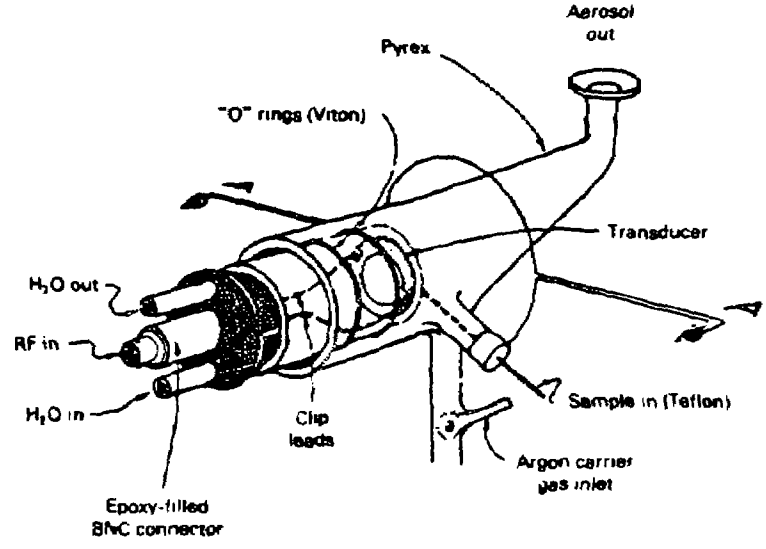

Figure 4. Ultrasonic nebulizer.[79]

Monochromators (Sequential Systems)

A scanning monochromator consists of only one photomultiplier detector, and determines the elements of interest by moving sequentially from one wavelength to another (Figure 5).

Comparison of Simultaneous and Sequential Systems

The polychromators lack the flexibility of the sequential monochromators. The analysis time for the polychromators, however, is shorter than that of the monochromators. Analysis time for a simultaneous system is <2 minutes for 30 elements compared to 1-2 elements/minute for a sequential system. Recent developments in scanning mechanisms for sequential systems have increased the throughput to [illegible] elements/minute. When determining a broad range of element concentrations in widely varying sample matrices, the fixed exit slits that are used for isolating spectral lines in a simultaneous system may become overly

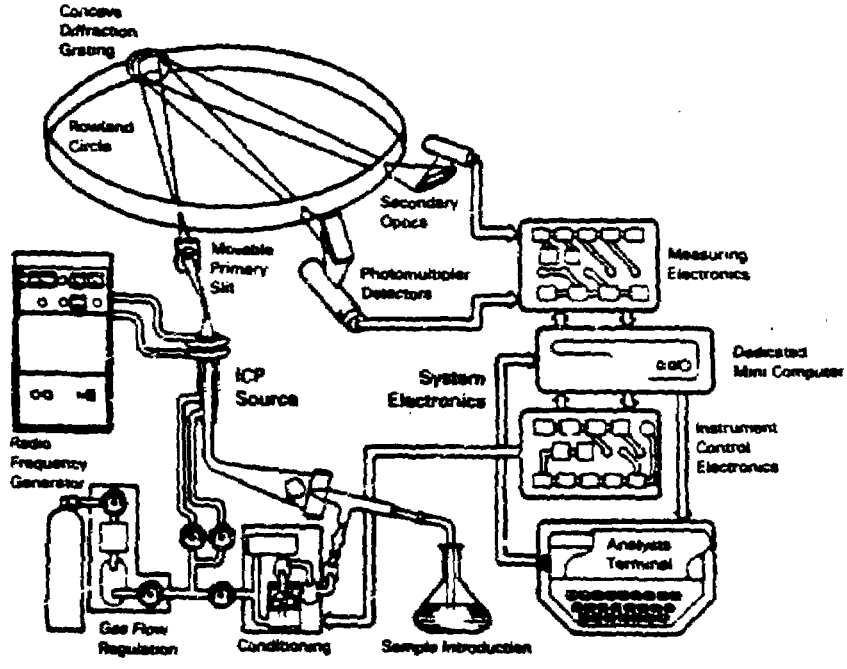

Figure 5. Example of a polychromator-based ICP system.

restrictive. The standard spectral line may not be usable due to severe interferences from other elements which are present. In this type of situation, an alternate line may have to be selected at a sacrifice in detection limit. A programmable scanning monochromator facilitates this type of procedure while the option for choosing the appropriate line with the polychromator will not be available unless a scanning mechanism is part of the system. Polychromators are thus the ideal instrument only when analyzing routine samples of uniform composition for a selected group of elements.

DETECTION LIMITS

For the purpose of this report, we have ignored any differences between the definitions of detection limit in summarizing the data. By comparing the median detection limits observed for each element, we can avoid some of the ambiguity inherent in different detection limit definitions. Median detection limits for simple aqueous matrices (such as deionized water or acidified water) are shown in Table 4. The volatile elements As, Hg, Pb, Sb, Se, and Tl all have median ICP detection limits which are above 20 µg/l. As, Hg, Pb, Sb, and Se are the elements traditionally determined by flameless AA procedures. The median detection limits obtained for more complex matrices (such as acid digests of sediments, steel, or coal fly ash) are listed also in Table 4 and are not significantly different from those observed in simple matrices. This is in part an artifact of the variable definitions of detection limits stated earlier. As discussed in the Multielemental Methods Section, the detection limit should be based on a particular matrix. However, this summary provides

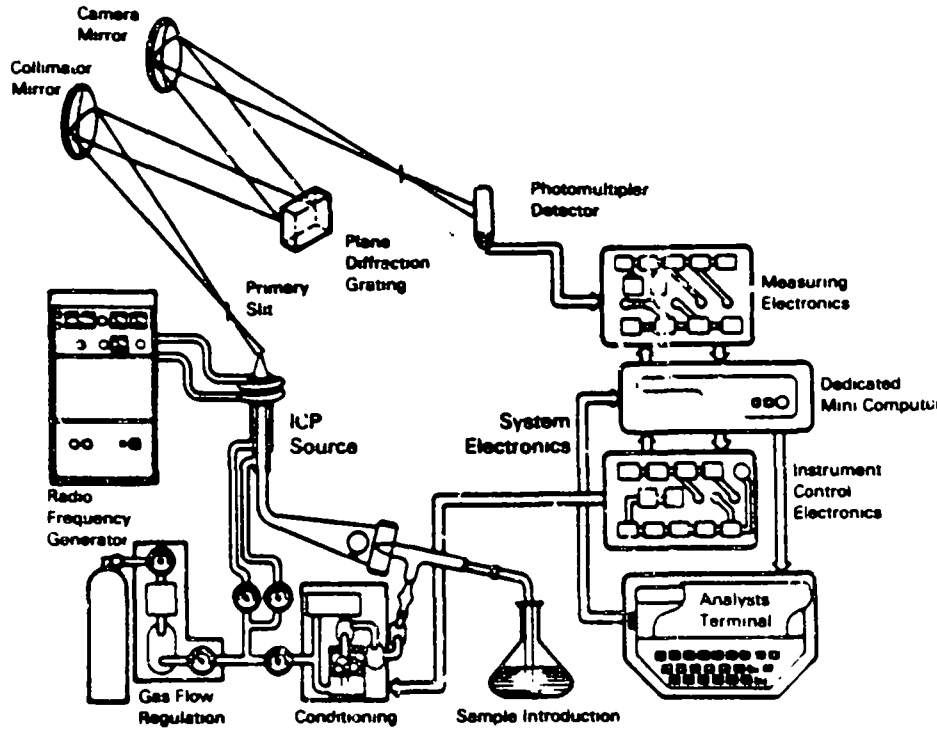

Figure 6. Example of a monochromator-based ICP system.

a good indication of the magnitude of the detection limit for the different matrices for each element. The relative independence of ICP detection limits from matrix effects indicates the utility of this technique for analysis of wastes.

ACCURACY AND PRECISION

Having demonstrated the detection limits typically achieved with ICP in a variety of matrices, it was important to assess the accuracy and precision of the technique at different concentration levels under various conditions. Accuracy and precision are affected by a number of factors:

1. Sample preparation of non-aqueous material may affect the recovery of a given element as a result of incomplete digestion, volatilization, or contamination.

TABLE . .DIAN OF REPORTED ICP DETECTION LIMITS FOR SIMPLE AQUEOUS MATRICES AND COMPLEX MATRICES*

Element	Aqueous Detection Limit (μg/l)	Complex Matrix Detection Limit (μg/l)
Ag	6 (12)	4 (4)
As	30 (15)	39 (3)
Ba	1 (15)	1 (6)
Be	1 (14)	0.2 (2)
Cd	2 (23)	2 (10)
Cr	4 (19)	4 (12)
Cu	3 (23)	2 (13)
Hg	20 (8)	30 (1)
Ni	7 (19)	8 (16)
Pb	30 (24)	20 (14)
Sb	50 (10)	30 (2)
Se	50 (12)	18 (1)
Tl	60 (5)	23 (1)
Zn	3 (22)	2 (16)

*Parentheses contain the number of reported detection limits.

2. Once a sample is in a homogeneous solution, errors can arise from spectral interferences which may be caused by direct spectral overlap between the element of interest and an interfering element or a background shift. Examples of these interferences are cited below and, in a more detailed discussion of interferences, we will enumerate the reliability of available correction methods.

3. Accuracy can be readily affected by errors in preparation of standards. This is an error which is common to any analytical method and therefore can be considered independent of technique.

First, the reported accuracy and precision comprising the database is discussed and then the interferences and correction methods for ICP follow.

Reported Accuracy and Precision

Table 5 shows the mean precision and accuracy by ICP reported for each element as a function of concentration level. Accuracy is assessed by examining percent recoveries for analytes added to samples or by agreement with certified values for reference materials, such as Standard Reference Materials (SRMs), from the National Bureau of Standards. For 12 of the 14 elements there are sufficient data available to make some assessments for determinations by ICP. For Hg and Tl there are no available data on precision and accuracy. This is principally because Hg and Tl are usually determined by cold-vapor AAS and furnace AAs, respectively. In addition, there are no SRMs with certified values for Hg of Tl at levels measurable by ICP. For the remaining elements, the precision of ICP as reported in the literature is fairly independent of

concentration level and typically being better than a 15 percent relative standard deviation. The only exception is As which exhibits poor precision at high concentrations (10-1000 mg/l). This is probably due to the fact that As is volatile and easily lost during sample preparation. The accuracy of ICP is excellent with most data indicating recoveries between 80 and 120 percent (Table 5).

TABLE 5. MEAN PRECISION AND ACCURACY BY ICP

Element	Concentration Range (µg/g)	Precision (percent RSD)	Accuracy (percent recovery)
Ag	Below 1	6	108
	1-10	3	99
	10-100	11	150
As	1-10	5	91
	10-100	19	98
	100-1000	-	97
Ba	10-100	5	91
	100-1000	8	103
	Above 1000	4	99
Be	1-10	8	106
	10-100	16	69
	100-1000	14	112
Cd	Below 1	12	134
	1-10	2	112
	10-100	5	100
Cr	1-10	7	84
	10-100	5	105
	100-1000	5	94
	Above 1000	1	83
Cu	Below 1	50	100
	1-10	14	98
	10-1000	7	98
Hg	NA*	NA	NA
Ni	Below 1	22	92
	1-10	17	92
	10-100	8	125
	100-1000	4	97

(continued)

TABLE 5. (Continued)

Element	Concentration Range (µg/g)	Precision (percent RSD)	Accuracy (percent recovery)
Pb	Below 1	14	96
	1-10	17	104
	10-100	8	120
	100-1000	5	142
	Above 1000	2	98
Sb	10-100	9	NA*
Se	1-10	NA	81
	10-100	NA	90
Tl	NA	NA	NA
Zn	Below 1	11	88
	1-10	1	107
	10-100	8	106
	100-1000	6	100
	Above 1000	4	98

*NA = not available

SOURCES OF ERROR

Accuracy is potentially affected by a number of error sources. Analytical errors in ICP are caused by direct spectral and background interferences due to matrix elements, sample interaction with the plasma, variable physical characteristics of different matrices and instrument drift.

Spectral Interferences

Spectral interferences occur when the energy of the emitted radiation of the element of interest cannot be resolved from the radiation emitted by matrix elements of the sample. A direct spectral line overlap is observed and a false high reading is obtained. An example of this is the 228.80-nm spectral line for Cd which directly overlaps the 228.81-nm line of As (Figure 7).

Overlap may also occur even when the energy of the interfering spectral peak is more than a nm from the spectral peak for the element of interest (if this interfering element exhibits a very broad peak). Overlap will then occur between the element of interest and the wing from the interfering element. An example of this type of interference is the 214.44-nm line of Cd with the 215.54-nm line of Al (Figure 8).

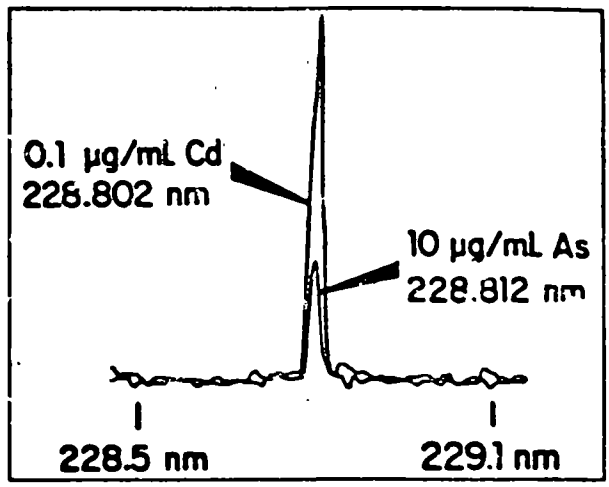

Figure 7. Direct spectral overlap of As and Cd emission lines.[28]

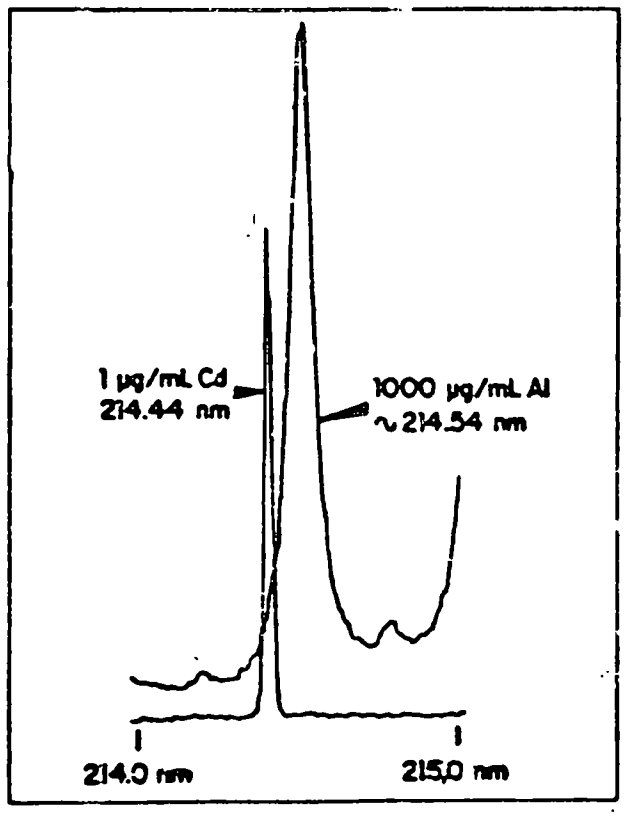

Figure 8. Partial spectral overlap of Cd and Al emission lines.[28]

Background Shifts

The spectral line for an element may also be affected by background emission. Stray light from strong emission lines and broad continuum radiation can produce high spectral readings. Such background shifts can occur for numerous elements when major constituents are at high concentrations.

Chemical Interferences

Chemical interferences are due to the influence of certain reactions occurring in the plasma. These cause disturbances, either by affecting the ionization of the element of interest or by forming refractory compounds with the test element which affect the production of atoms and ions for emission. Due to the clean environment of plasmas, only the ionization type of interference is a problem. When the element of interest is easily ionized and the sample matrix contains high concentrations of easily ionized concomitants, a higher reading for an atom line will occur due to a shift in the ionization equilibrium of the analyte.

The extent of this effect is dependent upon the ionization potentials of the elements of interest, the relative concentrations of these elements and the instrumental operating conditions, the observation height in the plasma, and the power dissipated in the plasma. The selected instrumental settings are usually a compromise between mitigating chemical interferences and maximizing detection limits. The extremely high temperature of the plasma does not support extensive ionization interferences because the plasma is electron-rich and provides a well-buffered environment. Optimization of the radio-frequency power, gas flow, and observation height are usually sufficient techiques to minimize this type of interference.

Physical Interferences

Physical interference occurs when there is a difference in the aspiration rate of samples and standards into the plasma. Unless the rates of nebulization for sample and standard are identical, the accuracy of the result will be questionable. Variability in the acid or salt concentration from sample to standard will affect the accuracy because the viscosity, surface tension, and density will differ from sample to standard. Detection limits are also degraded when analyzing samples with high acid or salt concentrations due to deterioration of the nebulizer performance. To ensure prevention of this type of physical error, the acid and salt content of the calibration standards should be carefully matched to the samples. If matching is not possible, an internal standard should be used and the appropriate correction factors applied.

Instrumental Drift

Instrumental drift involves any changes in the performance of the instrument as a function of time. This factor was included in our analysis based on responses to our questionnaire. User responses to the question on instrumental drift were quite variable. The replies ranged from statements that drift was as high as 12 to 15 percent during the course of an 8-hour day to statements that drift was not a problem. Recalibration is performed from two to four

times daily by those users reporting instrumental drift. Drift was attributed to nebulizer instability and temperature effects.

CORRECTION METHODS

Alternate Lines

The optimal correction for the problem of spectral-line overlap is to switch to an interference-free analysis line for the element of interest. In the example of As interference on Cd, alternate lines include the 214.44- and 226.50-nm Cd lines. Capability to shift to a different analysis line requires a sequential spectrometer or a scanning mechanism for a simultaneous instrument. Alternate emission lines may not provide sufficient detection limits for some applications. Use of interference filters on simultaneous instruments is not usually sufficient to remove severe spectral interferences.

Correction Factors

If switching to a different analysis line is not possible, computer corrections can be made. The concentration of the interfering element can be discerned at an analysis line other than the one which overlaps. Analysis of a pure standard of the interfering element will then indicate the ratio of peak heights at these two different analysis lines. Once this information is obtained an empirical spectral interference factor can be calculated which will correct the measured peak height for the interfering element. Tables of these empirical correction factors have been compiled. Currently there is a dispute in the literature as to whether these factors can be linearly interpolated for interferent concentrations. Church[23] claims the correction factors are linear up to 1000 mg/l of interferent while Fassel[33] maintains that correction curves should be established. Table 6 displays the major interferences and empirical interference factors reported by Church[23] for the elements of interest. Although interference factors depend upon the particular instrument used, this table is indicative of the magnitude of effects.

Background Correction

Computers are also utilized to perform background corrections for analyte peaks. The technique consists of measuring the background intensity at a certain distance on one or both side(s) of the analyte peak and subtracting the background intensity from the analyte peak intensity. The wavelengths used for background measurements must be selected with care to achieve proper correction.

If the interference problem is so severe that none of these procedures provide adequate analysis, then the only remaining alternative is some type of chemical separation such as solvent extraction or hydride formation.

SAMPLE PREPARATION

Liquid samples (organic or aqueous) require no preparation prior to analysis by ICP unless the sample contains suspended particulate matter or a high concentration of dissolved solids. Particles must be filtered out or

TABLE 6. SPECTRAL INTERFERENCE FACTORS REPORTED* FOR ICP

Element (wavelength)	Major Interferent	Interference Factor† (ppb/ppm)
Ag (328.1 nm)	Zr	6†
As (193.8 nm)	V	7
Ba (455.4 nm)	Zr	0.3
Be (313 nm)	V	0.6
Cd (266.5 nm)	Ni	0.3
Cr (283.6 nm)	Fe	1
Cu (324.8 nm)	Be	1.3
Hg (253.6 nm)	Co	10
Ni (231.6 nm)	Co	0.1
Pb (220.4 nm)	Co	1
Se (196.1 nm)	V	1
Zn (202.6 nm)	Cr	0.8

* Data from Church[23]
† Factor indicates that a 1-ppm Zr solution will contribute emission at 328.1 nm equivalent to 6 ppb of Ag.

digested if they are to be included in the analysis. Difficulty in analyzing high-salt solutions is due to clogging of the nebulizer. Procedures for alleviating this problem are discussed under "Instrumentation". For conventional ICP solid samples require a dissolution step prior to analysis. Sample preparation and homogeneity are the largest sources of error in ICP when an adequate number of recalibrations are performed during the day to correct for instrumental drift, the acid and salt matrices of samples and standards are matched, and the operator is experienced enough to recognize and correct for the spectral and background interferences. The major digestion procedures are fusion and acid digestion.

Fusion

Fusions are typically performed with bicarbonate, $LiBO_2$ or NaOH followed by acid dissolution. For routine analysis of trace elements, fusion is impractical due to manipulative difficulties, the introduction of alkali metal salts

(which may clog the nebulizer or cause undesirable matrix effects, sample dilution, analyte losses, potential for high blanks, and added expense due to the required high purity materials.

Acid Digestion

Acid digestion utilizes heat and either a single acid, or some appropriate combination of acids, to dissolve the sample. Hydrofluoric (HF), hydrochloric (HCl), nitric (HNO_3) and perchloric ($HClO_4$) are the acids typically employed. The particular combination of acids selected is a function of the type of sample matrix being digested. For soil contaminated with hazardous waste samples, nitric acid may be sufficient, but the combination $HF/HClO_4/HNO_3$ will ensure complete digestion. Thompson[94] and others have found a simple HNO_3 digestion to be greater than 90 percent effective in solubilizing trace metals such as Cu, Pb, Zn, Cd, Ni, Hg and Ag from clay minerals. In addition to the concern that dissolution may be incomplete, loss of the volatile elements As, Hg, and Se must be prevented. This is usually achieved by carrying out the digestion procedure in sealed Teflon bombs.

The advantages of sample dissolution are insurance of homogeneity and the ability to select extraction schemes which may mimic real-life processes such as selective leaching from a dump site (e.g., dilute-acid leaching). Total digestion may not reflect environmental availability of toxic elements. The disadvantages are the additional expense, the potential for contamination, dilution, potential loss of volatile analytes, the potential for incomplete dissolution and the explosive hazard of $HClO_4$. Furthermore, when using acid digestion, care must be exercised to ensure that all samples and standards contain the same percentage of acid since acid content will affect the rate of sample nebulization and, therefore, the accuracy of the results.

COSTS

ICP costs are a function of the number of samples analyzed. The capital expense can be amortized to a small increment of unit costs if there is a large number of samples. Expendables are minimal and labor is the largest single cost on a per sample basis.

Capital Investment

$50K (Basic ICP) Add $10K for sampler and printer

$100K (ICP/AAS full system - monochromator or 20 channel simultaneous)

$175K (Top-of-the-line simultaneous with scanning monochromator and 40 channels).

There are several major U.S. manufacturers:

Jarrell-Ash - only polychromator unit

Instrumentation Laboratory	- only monochromator unit
Applied Research Laboratories	- both monochromator and polychromator units
Perkin-Elmer	- only monochromator unit
Baird	- only polychromator unit
Instruments, S.A.	- both monochromator and polychromator units.

At the present time, intense competition and developments in ICP have reduced capital costs markedly. It is now possible to obtain a high quality sequential or simultaneous system for under $60K.

Expendables

The major expendable supply in ICP is argon (which is consumed at a rate of 1-2 liters/minute). Users indicate typical costs for the gas plus other supplies (standards, etc.) to be about $1-2/sample.

Operator Skill

Operator skill requirements for ICP are significant. Although the technique is presented as being rapid and straightforward, the operator must be aware of the various types of corrections required and the importance of each one. The ability to properly establish, maintain, and operate a computer system which handles spectral and background interferences comes only with experience. Thus, labor costs are the most significant factor in estimating total ICP costs.

Sample Throughput

The instrumental analysis rate is 30-100 samples/day. The rate-limiting step for the analysis of solid samples is the required preliminary digestion. Although the digestion can be set-up for batches of 50-100 samples, the overall digestion time for these samples is several hours.

Commercial Availability

Many laboratories offer ICP analysis at rates ranging from $20-100/sample, depending on the number of elements being determined and the complexity of the sample preparation. Most commercial laboratories do not typically define detection limits on a matrix-dependent basis and thus may provide overly optimistic detection limits. Responses to the user questionnaire indicate that many laboratories may not be familiar with all the potential problems involved in ICP analysis of wastes. Although methods have been published for ICP analysis by EPA (edited by Theodore D. Martin and John F. Kopp, Environmental Monitoring and Support Laboratory Office of Research and Development, U.S. EPA, Cincinnati, OH 45268, EPA 200.7, Interim Method - Federal Register, December 3, 1979) and ASTM (1981 Annual Book of ASTM Standards, Part 31, Water.

American Society for Testing and Materials, 1916 Race Street, Philadelphia, PA), these methods are geared to waters with minimal interferences, and commercial laboratories without well-trained personnel cannot automatically apply these procedures to difficult matrices to obtain reliable data. A round-robin study on ICP analysis of wastes would be useful to establish the reliability of commercial services.

SECTION 6

X-RAY FLUORESCENCE SPECTROSCOPY (XRF)

THEORY

A sample target bombarded with sufficiently energetic x-rays will eject inner-shell electrons from atoms within the sample. For this process to occur, the x-rays must possess a minimum energy corresponding to the excitation potential to remove the appropriate photoelectron. The resulting excited atoms dissipate this energy by losing a second electron or by emitting radiation. Electron loss is referred to as the Auger effect while photo emission is known as x-ray fluorescence.

When fluorescence occurs, a particular element will emit a photon with a characteristic wavelength because quantum selection rules limit the possible electron transitions. A count of the emitted x-ray intensity can be used to calculate the quantity of the element present in the sample. The wavelength of a photon emitted by a particular element is inversely proportional to the square of the atomic number of the element. Light elements emit x-rays that have wavelengths which are too long to be dispersed by commercially available analyzing crystals. This coupled with the fact that radiationless transitions increase with decreasing atomic number makes x-ray fluorescence analysis of light elements with atomic number less than 10 impractical.

The minimum excitation radiation energy to remove an inner shell electron is dependent on the energy level shell of the electron as well as the atomic number of the element. K shell electrons require the largest amount of energy for removal because these shells are located closest to the nucleus of the atom. A plot of the transmitted intensity of the bombarding x-rays as a function of their wavelengths (Figure 9) reveals a series of sharp spikes. Each spike is referred to as an absorption edge and will occur where the incoming radiation does not have sufficient energy to remove electrons from a particular electron-energy level.

Calculation of an element's concentration from its x-ray count rate is not a straightforward procedure in a mixed element matrix because the other elements present absorb some of the bombarding x-rays. Measurement of the decrease in the intensity of the bombarding x-rays as they attempt to pass through the target sample gives an indication of the amount of x-ray absorption occurring within the sample (equation 7).

$$I = I_0 e^{-\mu x} \qquad (7)$$

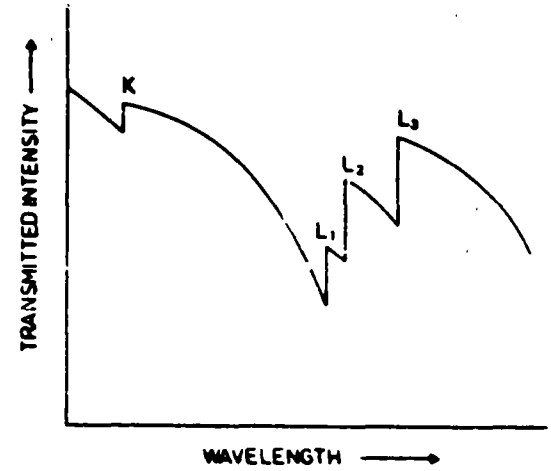

Figure 9. Intensity versus wavelength of x-rays transmitted through an absorber.

where

I = the intensity of the x-ray beam of an initial intensity I_0
x = the thickness of the absorber
μ = the linear absorption coefficient

The linear absorption coefficient, when normalized for the density of the absorber, yields μ_m (which is known as the mass absorption coefficient). Each element has its own characteristic mass absorption coefficient and the absorption coefficient increases with increasing wavelength of the bombarding photons. A plot of the mass absorption coefficient as a function of the wavelength of the bombarding photons yields a curve which is the inverse of the transmitted intensity curve given in Figure 9. The mass absorption coefficient for a particular element can be determined from equation 8.

$$\mu_m = \frac{CZ^4 \lambda^n}{A} \tag{8}$$

where

Z = the atomic number
A = the atomic weight
n = an exponent ranging in value from 2.5-3
C = a constant which changes at each absorption edge
λ = wavelength

The total mass absorption coefficient for a sample is an additive function of the mass absorption coefficient of each individual element present in the sample multiplied by that element's weight fraction (equation 9).

$$\mu_m = W_A\mu_A + W_B\mu_B \tag{9}$$

where

W = element weight fraction
μ = mass absorption coefficient for each element

The relationship between elemental concentration and measured characteristic x-ray count rate, given in equation 10, is complex because it is dependent on a knowledge of the matrix absorption correction. In order to obtain accurate values with XRF, the absorption correction values for a sample must be accurately known, empirically derived or minimized.

$$PPM(i) = C_i/C_s \times Ab(corr\text{-}i) \times M_s \times 1/k_i \qquad (10)$$

where

$PPM(i)$ = concentration of element i in parts-per-million
C_i = x-ray count rate from element i
C_s = x-ray count rate from element standard
$Ab(corr\text{-}i)$ = $\mu_m/1\text{-}e^{-\mu_m}$ = absorption correction for matrix absorption effects
M_s = mass of standard
k_i = relative excitation - detection efficiency for x-ray line from element i compared with standard element x-ray line.

INSTRUMENTATION

XRF requires a spectrometer to sort the wavelengths of the photons which are emitted from the bombarded sample. Two spectrometer types are currently available.

Wavelength Dispersive

One type is the wavelength dispersive x-ray spectrometer in which the fluorescent x-rays are diffracted by a suitable crystal according to Bragg's Law. Wavelength dispersive spectrometers were the original type developed, but they have been superceded by energy dispersive systems due to cost considerations.

Energy Dispersive

Non-dispersive x-ray spectrometers operate by using semiconductor detectors to sort fluorescent x-rays according to their differences in energy. The nondispersive type offers the advantages of easier operation, more rapid analysis, less expense and avoidance of the use of crystal optics which can decrease x-ray intensities through radiation loss. The disadvantage of this instrument is the poorer resolution obtained at energies less than 10 keV. Progress in electronic design over the last few years has significantly improved this energy resolution. The advent of guard-ring detectors has drastically reduced the x-ray spectrum background. Currently, two types of semiconductor detectors are in use. Ge(Li) detectors offer high resolution but

must be operated at liquid nitrogen temperatures, whereas HgI detectors show great potential for operating at room temperatue but are not yet developed with adequate resolution for trace level work.

DETECTION LIMITS

Theory

A survey of the current literature reveals that the computation of detection limits for XRF is usually based on the definition given by Currie.[25] Currie states that the processes involving counting follow a Poisson rather than a normal distribution (unless the number of counts is large enough to approximate a normal distribution). In a Poisson distribution, the standard deviation cannot be considered independent of signal level (unlike ICP where the collected data follows a normal distribution). A summary of the qualitative and quantitative measurement limits for the situations of paired (sample and blank) data or a well-known blank are given in Table 7.

TABLE 7. MEASUREMENT LIMITS* FOR A POISSON DISTRIBUTION[25]

	Critical Limit (CL)	Detection Limit (DL)	Quantification Limit (QL)
Paired sample and blank	$2.33\ \mu_b$	$2.71 + 4.65\ \mu_b$	$50\left\{1+\left[1+\frac{\mu_b}{12.5}\right]^{1/2}\right\}$
"Well-Known" blank	$1.64\ \mu_b$	$2.71 + 3.29\ \mu_b$	$50\left\{1+\left[1+\frac{\mu_b}{25}\right]^{1/2}\right\}$

*When $\alpha = \beta = 0.05$ (for 5% risks), $K_Q = 10$, and μ_b = mean value for blank

Use of double-guard ring detector and pulsed x-ray tube can improve detection limits by approximately a factor of 4.

Observed Detection Limits

Table 8 shows the median detection limits computed for each element. Conventional XRF cannot determine Be, and no data were reported for Ag, Sb or Tl. These limits were obtained for various matrices and the detection limit definition is usually based on Currie.[25] Uniformity of the detection limit definition is not assured because some workers assume the definition based on a Poisson distribution, others assume a normal-distribution approximation and use two or three times the standard deviation of the background, while others use the definition based upon a Poisson-distribution but assume the absence of systematic and non-Poissonian random errors. For the specified elements, the detection limits are about 1-2 μg/g with the exceptions of Cd (5 μg/g) and Ba (10 μg/g). The limits observed for Cd and Se are questionnable median values because they are based on only one piece of data each. The poor detection

TABLE 8. MEDIAN OF REPORTED XRF DETECTION LIMITS*

Element	Detection Limit (μg/g)	Element	Detection Limit (μg/g)
Ag	NA	Hg	2 (3)
As	1 (2)	Ni	1 (4)
Ba	10 (3)	Pb	2 (6)
Be	NA	Sb	NA
Cd	5 (1)	Se	13 (1)
Cr	1 (4)	Ti	NA
Cu	1 (6)	Zn	3 (5)

*Parantheses contain the number of reported detection limits
NA = Not Available

limit for Ba may be due to the fact that its fluorescent x-rays have the same energy as a large fraction of the background radiation.

ACCURACY AND PRECISION

Given stable operating conditions, constant detector geometry and adequate background calibration, XRF instrumental precision becomes a function of counting statistics only. This source of error can be isolated because it is not significantly influenced by the manner in which the spectral data is accumulated and processed. A counting error rarely exceeds a few percent and typically does so only if the detection limit is approached. Analytical precision for XRF therefore appears to be limited by operator error. Under constant conditions the major source of imprecision will be due to the error in duplicating sample preparation rather than instrumental instability. In XRF, errors in sample preparation exceed 1% and arise from the inability to make pellets, fusions or thin films of uniform mass thickness.

The mean precision and accuracy for each element as a function of concentration level is shown in Table 9. Two trends are apparent in Table 9. Precision improves with increasing concentration, and accuracy is independent of concentration except at the extremely low concentrations where it is quite poor for some elements. Both of these observations are the expected ones. The precision does not seem to reach an acceptable value (<20%) until the concentration is greater than 10 μg/g and in some cases (Ba, Cr, Ni) not until it is greater than 100 μg/g. Barium and chromium, along with Pb, are also the elements that exhibit poor accuracy at lower concentrations. The precision and accuracy results for Sb and Se will not be interpreted because they are based on only one piece of data each.

SOURCES OF ERROR

One of the major problems present with every multielemental technique is the influence of matrix effects. These are often severe in XRF because a significant portion of the secondary and primary x-rays are absorbed by the major

TABLE 9. MEAN PRECISION AND ACCURACY BY XRF

Element	Concentration Range (µg/g)	Precision (percent RSD)	Accuracy (percent recovery)
Ag	NA	NA	NA
As	1-10	37	90
	10-100	8	98
Ba	10-100	34	122
	100-1000	6	105
	Above 1000	4	100
Be	NA	NA	NA
Cd	1-10	NA	91
	10-100	NA	80
Cr	1-10	51	142
	10-100	25	106
	100-1000	10	96
	Above 1000	3	98
Cu	1-10	89	98
	10-100	18	103
	100-1000	5	105
Hg	NA	NA	NA
Ni	1-10	72	105
	10-100	47	103
	100-1000	8	97
	Above 1000	3	100
Pb	1-10	NA	229
	10-100	12	103
Sb	1-10	75	58
Se	10-100	9	109
Tl	NA	NA	NA
Zn	1-10	NA	91
	10-100	6	99
	100-1000	12	98
	Above 1000	3	137

constituents comprising the sample matrix. The key to obtaining reliable x-ray fluorescence data is proper sample preparation. The sample must be prepared in a manner which will minimize matrix absorption problems and also ensure homogeneity (which is important because incident x-rays do not penetrate far into the sample). Conversion of x-ray count rate to element concentration will not be accurate unless the sample mass absorption effects can be compensated for or eliminated.

Sample Preparation

Solid samples may be prepared in accordance with any of three different procedures.

- Fusion
- Pelletization
- Filtration

Fusion of a sample with lithium tetraborate or borax will reduce matrix effects and ensure homogeneity, but loss of volatile elements and sample dilution with subsequent reduction in detection limits) are undesirable for trace element analysis.

If fusion is not utilized, the sample must be finely ground in order to overcome particle size effects. Uniformity can be assessed by grinding until further grinding gives no change in the fluorescent x-ray intensity. This powder can then be mixed with compressed borax or salts of light elements which do not produce an interfering spectrum and pressed into pellets or else slurried and filtered onto a Millipore-type filter. Preparation of pellets involves a minimum amount of time and ensures homogeneity but does little to alleviate matrix effects. The filtration method is more time-consuming and produces less stable samples (flaking can be a problem unless an acrylic-spray coating is applied) but thin, uniform filtered samples do have less severe matrix interferences than pelletized samples.

Interferences

Interferences which can occur in addition to matrix absorption are direct spectral interferences, background radiation interferences, and self-absorption of fluorescent radiation (which is referred to an enhancement). Typical x-ray fluorescence spectra are shown in Figure 10 and both spectral interferences and background radiation interferences are apparent. The Ba peak is located on the incoherent scattered background radiation from the excitation source, and several peaks occur on shoulders of adjacent peaks with higher fluorescent intensities.

Spectral Interference--

Direct spectral interference occurs when a spectral line from one element directly overlaps the spectrum line of another element because the emitted photons are of nearly equal energies. An example of this is the $K\alpha_1$ line emitted by Ti which interferes with the first order $L\alpha_1$ line of Ba. The $L\beta_1$ line of Ba does not have a Ti interference, but the $L\alpha_1$ line from Ce will interfere. The region below 4 keV contains the K lines of elements up to Ca

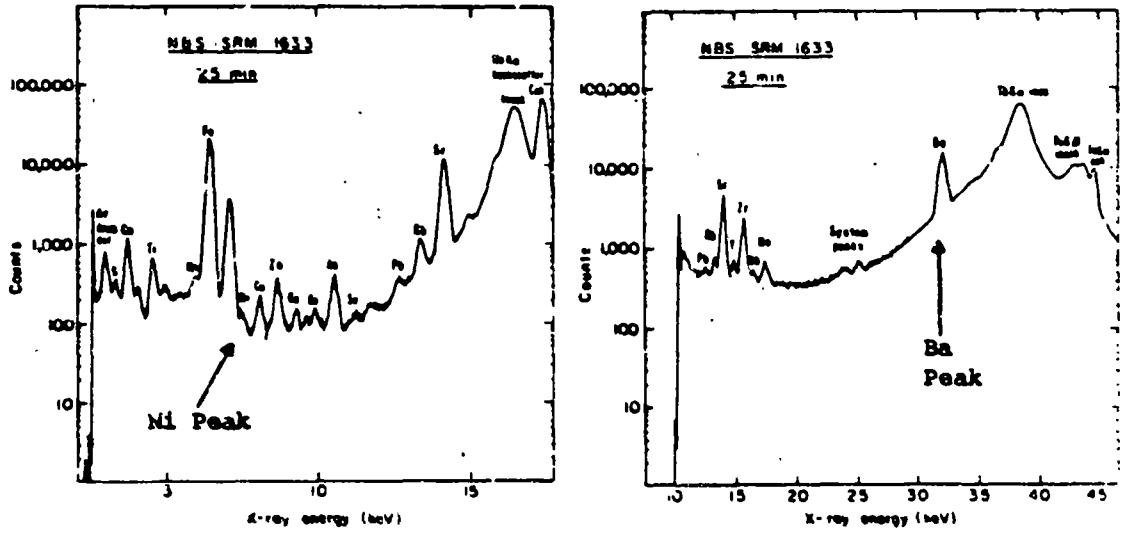

Figure 10. Spectral and background radiation interferences in XRF.[46]

and the L and M lines of the heavier elements. Several interferences occur in this region, notably Zn with Na and Pb with S. However, since the Zn L x-ray and Pb M x-rays are not normally used for analysis this is a problem which is more of theoretical interest. Heavier elements can usually be identified by using the higher energy lines in the same spectrum. In the region of 4-8 keV interferences from the L lines of Ba and the K lines of Ti affect the other elements which emit photons in this region, such as Cr. The V Kβ line and the x-ray tailing background from the large K-line emission of Fe (usually present in geological type samples) also interfere with Cr. In the region above 8 keV the only significant interference is the Kα line of As with the Lα line of Pb.

Corrections for these types of interferences can be attempted by adjusting the pulse-height selector to minimize the interference effect or using secondary lines to correct for the interferent. If neither of these two possibilities is viable, correction for the interferent may be initiated by computer applied empirical correction factors which calculate the relationship between the interfering intensity and another line of the interfering element. Table 10 summarizes the potential interferences for the 13 elements of interest measurable by conventional XRF.

Background Scatter--

Background radiation is principally the result of scattered excitation radiation. The scattered radiation seriously affects the detection limits of the technique by decreasing the ratio of the x-ray peak intensity to the intensity of the background. To minimize scattered radiation background,

TABLE 10. SPECTRAL INTERFERENCES IN XRF

Analytical Line	Interference
Ag Kα	
As Kα	Pb Lα
Ba Lα	Ti Kα
Ba Lβ	Yi Kβ, V Kα, Ce Lα
Ba Kα	
Cd Kα	
Cr Kα	V Kβ, Fe K, Tailing Background Ba L
Cr Kβ	Mn Kα, Tailing Background Ba L
Cu Kα	Ni Kβ
Hg Lα	Ge Kα, Zn Kβ
Hg Lβ	Br Kα
Ni Kα	Fe Kβ
Pb Lα	As Kα
Pb Lβ	
Sb Kα	
Se Kα	
Tl Lα	Pb Lα, As Kα
Tl Lβ	Br Kα
Zn Kα	Cu Kβ

monochromatic excitation radiation should be used. Conventional x-ray tubes and Bremmstrahlung sources give a continuum of interfering scattered radiation and, consequently, low x-ray peak intensity relative to background. The angle between the exciting and detected radiation also influences the intensity of the scattered radiation. Although the energy loss by incoherent scattering increases with the angle of scattering, at an angle of 90° the intensity of the scattered radiation is minimal relative to the fluorescent radiation intensities. An angle of 90° is therefore most favorable because it maximizes the peak-to-background ratios. The energy chosen for the excitation radiation also has an affect on the amount of scattered radiation that occurs. Maximum detection limits are obtained when the excitation radiation is slightly greater than the K or L absorption edge energies of the elements to be determined, but of sufficient energy that scattered radiation does not produce significant overlapping background.

Background scatter is also a function of the specimen thickness. Because absorption effects increase more rapidly for fluorescence than scattered excitation radiation, detection limits decrease as specimen thickness approaches the critical thickness (the thickness beyond which an increase in thickness does not increase fluorescence x-ray intensity). Maximum detection limits are, therefore, achieved by using thin specimens. The reduced counting rates which are obtained from thinner specimens can be compensated for by using a more intense excitation radiation. In the case of multielemental analysis, fluorescent x-rays will cover a broad range of energies and a trade-off in the

ratios of x-ray line intensities to spectral background for some of the elements will occur.

The spectral background for elements which have K x-rays in the range 31-32 keV (e.g., Ba) contain a larger fraction of scattered radiation which increases the errors in their determination. These errors can be reduced and a higher x-ray line spectral intensity achieved by operating the x-ray tube at higher voltages. This will shift the scatter radiation to higher energies. This may not be possible, however, if the excitation system is limited to certain maximum voltages.

Computer correction may be applied for background radiation interference effects. Some commercial systems are equipped with software to compute the background correction factors for each peak so that the background need only be measured at one position during the analysis of unknowns.

Enhancement--

Enhancement effects are maximized when the major component of a sample emits a wavelength just shorter than the absorption edge of the element of interest. Experimental results have indicated that enhancement effects are negligible for most thin specimens.

CORRECTION METHODS

Matrix absorption effects can be minimized by using thin sample specimens. Both thin pelletized samples and thin targets collected on filters still have some finite thickness, however, and yield data which require corrections.

Matrix Matching

The simplistic approach for dealing with matrix absorption eliminates the need to quantify and correct for this error by ensuring that identical absorption occurs in the samples and standards. This can be achieved through the use of standard additions, internal standards, or matrix matching standards to samples. Matrix matching is the most impractical of these methods since it requires quantitative knowledge of the sample constituents and hazardous waste samples are typically complex and highly variable. Use of an internal standard is less time consuming but a qualitative knowledge of the matrix is still necessary since the element introduced as the standard must be absent from the sample. Knowledge of sample matrix is not needed for standard additions but the multiple determinations required for each element make this procedure extremely time-consuming when determining 13 elements per sample.

Correction Factors

Tables of empirical interaction coefficients (k_{ij}) generated from the analysis of standards containing one major component and one trace element can be utilized for matrix absorption corrections. Use of these coefficients in equation 11 enables calculation of a concentration corrected for absorption effects.

$$CC_i = I_i \sum_{j=1}^{n} (k_i, j) C_j \qquad (11)$$

where

I_i = intensity of element of interest
CC_i = corrected concentration for element of interest
C_j = concentrations of interfering elements

Adequate corrections can be made provided the exact matrix composition of the sample is known. This technique is not viable for analysis of hazardous waste samples because the matrices are highly variable and major element composition is typically unknown.

Modified Correction Factors

A modification of the empirical interaction coefficient technique allows absorption corrections to be made without any knowledge of the exact major elemental composition of the sample. Iteration of equation 12 on n+2 standards (where n equals the number of interfering elements) allows the determination of the concentration of element i corrected for the absorption effects of the other sample elements.

$$CC_i = A + B\, I_i\, [\exp(-k_i, j\, C_j)] \qquad (12)$$

This method is inconvenient because it still requires qualitative knowledge of the sample matrix composition, and the preparation and analysis of n+2 standards per sample is not cost-effective.

Transmission and Fluorescence

This correction method does not depend on quantitative or qualitative knowledge of the sample matrix and is applicable to hazardous waste samples. Matrix absorption corrections are calculated from transmission and fluorescence measurements on pellet samples of uniform mass thickness. This is done by measuring the relative x-ray intensity with and without the sample from a target located at a postion adjacent to the back of the sample. The mass absorption correction is calculated according to equation 13.

$$M_c = \frac{I_T' - I_S}{I_T} = e^{-\mu_m} \qquad (13)$$

where I_S, I_T, I_T' are the intensities of the x-ray plus background from the specimen alone, the target alone, and the specimen plus the target, respectively. This technique corrects for inter-sample matrix variations and yields

accurate results if the specimen is less than the critical thickness. The requirement of two analyses per sample makes this method time-consuming and less cost-effective; furthermore, the quantity of raw data produced could exceed the 30-40 kilobyte core memory of most minicomputers.

Scattered Radiation

Use of scattered radiation is another absorption correction technique which works for matrices of unknown composition. When monochromatic x-rays bombard the sample they are scattered as well as absorbed. Two different types of scattering can occur. Rayleigh scattering is scattered radiation which experiences no change in wavelength (coherent scattering). Compton scattered radiation is caused by an elastic collision between a photon and an electron in which the photon loses energy. The amount of energy lost is dependent upon the angle between the scattering direction and the incident beam. This type of incoherent scattering predominates when the energy of the incident x-ray photons are much greater than the binding energy of the bombarded electrons. Since the binding energy increases with increasing atomic number, scattering by heavier elements is mainly coherent. Mass absorption coefficients are also a function of the atomic number so determination of intensity of Compton or Rayleigh scattering by a sample can be related to the sample's mass absorption coefficient. There is a linear relationship between Compton scattering and mass absorption coefficients for materials of known composition.

Absorption corrections can be based on the Compton scattering, the Rayleigh scattering, or the ratio of both. The ratio method may be used with a continuum or discrete line excitation while the other two require a discrete line source in order to achieve resolution of the coherent and incoherent components. Use of Rayleigh scattering either alone or in combination with Compton scattering, determines a less accurate mass absorption coefficient value due to diffraction of Rayleigh scattered radiation.

The Compton scatter intensity may be used to determine mass absorption coefficients. The procedure requires that the specimens be of infinite thickness for all radiations of interest and that the bombarding x-ray radiation be of shorter wavelength than the wavelength corresponding to the absorption edge of the highest atomic number major element in the matrix. For geological samples this is usually Fe and the Compton scattering correction technique can be used down to the $K\alpha$ wavelength of Ni utilizing an Au, W or Mo x-ray tube as excitation source. The ratio of the mass absorption coefficient for the sample and standard measured at any particular wavelength in the region of wavelengths shorter than the Fe absorption edge is constant for all other wavelengths in that region. Outside of this region, the amount of Fe present in the sample must be known in order to calculate the ratio correctly.

True Background

For a series of different samples, a plot of an element's spectral background versus the Compton-scattered radiation is linear, but does not intercept the origin. This residual background at the intercept is attributed to instrumental factors (such as electronic noise as well as scattering and fluorescence from the analyzing crystal). Subtraction of this residual yields

the "true" background which is inversely proportional to the mass absorption coefficient. Correction for matrix absorption can therefore be obtained by taking the ratio of the total peak intensity minus the total background to the "true" background. The correct concentration of the element of interest can be calculated from an equation.

At 7.1 keV, the total mass absorption coefficient of a soil-derived sample changes abruptly because of the Fe K absorption edge. The true background intensity determined for elements with x-rays <7.1 keV is inversely proportional to the apparent mass absorption coefficient rather than the true coefficient. Thus, without taking this into account, a serious systematic error would result if one assumed a uniform change in the mass absorption coefficient with energy. The proper correction requires the determination of the weight fraction of Fe present in the sample and the difference between the apparent and the true total mass absorption coefficient. Utilizing this background technique, only one background reading is required to calculate both background and matrix variation corrections for spectral peaks of interest.

Other Methods

The scattered radiation techniques discern the mass absorption due to the heavy elements ($Z > 13$). Since environmental samples are typically composed of a significant amount of light elements (such as C, H and N) they should be considered when making corrections. Nielson[74] developed a method to correct for absorption due to heavy and light elements. Thin film calibrations are used to determine the incoherent and coherent scattering caused by heavy elements. The remaining fractions of the scatter peaks are then used to determine the quantity of two representative light elements. Utilizing an iterative process, the heavy and light element concentrations are used in computing self-absorption, enhancement, and particle size corrections from which new heavy element concentrations are determined. This technique avoids the burden of making transmission measurements on each sample or making assumptions about sample composition or having to dilute the sample in order to accurately know its composition. Table 11 outlines the assumptions inherent in utilizing the different scattering techniques to correct for matrix absorption. The only assumption inherent in Nielson's technique is that diffraction is negligible.

Summary of Correction Methods

Table 12 summarizes all the matrix absorption correction techniques and their limitations and disadvantages. Although all of the techniques are capable of generating good data, the first four techniques listed are not applicable to highly variable complex matrices. Use of these techniques on a routine basis for hazadous waste analysis would be prohibitively time-consuming and expensive. The scattered radiation techniques are rapid and most cost-effective; however, those utilizing Rayleigh scattering may be less accurate due to diffraction effects. The true background residual technique is preferable to the total background technique because this eliminates the assumption that detector background is negligible. Any of the remaining scattered radiation techniques should be amenable to routine analysis of hazardous wastes.

TABLE 11. LIMITING ASSUMPTIONS FOR USING BACKSCATTER IN XRF MATRIX CORRECTIONS

	Assumption	Method
1.	Sample is infinitely thick or of thickness equal to standards	I, C, (I+C)light B, TB
2.	The ratio $\frac{\mu sample}{\mu standard}$ at the analyte line equals the ratio $\frac{\mu sample/\sigma sample}{\mu standard/\sigma standard}$ at the scatter energy	I, C, (I+C)light,B
3.	Diffraction is negligible	C, (I+C)light, B (I+C)light
4.	Background at analyte energy is from the sample and not due to detector background	B
5.	The "true" and "residual" background intensities can be accurately resolved	TB

μ = mass absorption coefficient
σ = mass scattering coefficient
C = ratio of fluorescent intensity to coherent scattering intensity
I = ratio of fluorescent intensity to incoherent scattering intensity
B = ratio of fluorescent intensity to total spectral peak background
TB = ratio of fluorescent intensity to true background (total background - residual instrumental background)
(I+C)light = ratio of fluorescent intensity to incoherent and coherent scattering including light elements

SAMPLE PREPARATION

Liquids

Sample preparation techniuqes are of prime consideration in obtaining accuracy, precision and adequate detection limits. Samples in a liquid give very high background intensity due to the scattering of primary radiation, and are usually dried prior to analysis. Giauque (personal communication), however, performed analyses on liquid shale oil samples by using incoherent scattered radiation, corrected for matrix absorption, as an internal standard. Physical methods of drying such as evaporation by heat lamp onto a Mylar film, absorption into spectroscopic powders with subsequent pelletization, or nebulization onto the target substrate all have problems in ensuring even distributions. The evaporation technique produces surface gradients of elemental

TABLE 12. MATRIX ABSORPTION CORRECTION TECHNIQUES FOR XRF

Technique	Disadvantages
Matrix match standard or internal stanard	Requires knowledge of the matrix composition Excessive cost Contamination
Standard additions	Excessive cost Contamination
Inter-element correction factors (k_{ij}, j)	Requires knowledge of the matrix composition
Modified inter-element correction factors	Requires qualitative knowledge of matrix composition Large cost of running n+2 standards (n= interferences) for every sample
Direct determination of mass absorption coefficients	Transmission and fluorescence measurement required for each sample which necessitates more computer core memory and more expense
Scattered radiation techniques	
a. Rayleigh scattering	
b. Compton scattering	Limitations listed in Table 10
c. True background	
d. Light element technique	

distribution while the other two methods yield poor residue recovery. The most successful method is a chemical preparation involving formation of water-insoluble metallic chelates and subsequent filtration. This technique is: (a) time-consuming in terms of sample preparation; (b) subject to the contamination potential associated with any preconcentration technique; and (c) restricted to a few elements (those precipitated with high efficiency by the chelating agents such as the dithiocarbamates). Alternate techniques have involved collection on filters impregnated with ion-exchange resin, but again these techniques are dependent on some prior knowledge of matrix to ensure optimum recovery of the desired elements. Clearly, the preparation involved in obtaining a representative homogeneous dried aliquot of a liquid sample involves considerably more time and effort than solid sample preparation techniques.

Solids

Homogeneity--

Obtaining good results for solid samples is dependent on minimizing the variability of matrix effects and eliminating particle-size effects which result from a non-homogeneous sample. The particle size that can be tolerated depends on the measured fluorescent wavelength because the absorption coefficients increase at the rate of approximately λ^3. If the x-ray beam passes through numerous grains before it is seriously attenuated, then the effect of the different grain sizes is averaged and the sample is effectively uniform. If the x-ray beam is absorbed in passing only a few grains, the sample is not uniform, and the fluorescent intensity will depend on the particle-size distribution of each mineral component in a complex way.

Preparation for Measurement--

Once in powder form, the sample can be pressed into pellets, fused with lithium borate, or slurried and filtered onto a Millipore-type filter. A thin uniform target sample results from filtration, but an acrylic-spray coating is required to prevent flaking. Pressed pellets are homogeneous but still have the problem of matrix effects. Correction is achieved using one of the methods discussed above. When pressed pellets are used, measurements of both element peak and background peak are required for each sample.

Fusion eliminates particle size effects and minimizes the variability of matrix absorption by diluting the sample with flux. The fluxes commonly employed are sodium borate, lithium borate or lithium tetraborate (which are strong x-ray absorbers). These fluxes make the absorption from matrix substituents negligible by comparison. The optimum dilution ratio depends on the required detection limits and the dilution required to mitigate absorption by matrix elements.

Loss of volatile components (As, Hg, Se) is a serious problem when utilizing fusion as the sample preparation procedure. Pella, Lorber and Heinrich[80] also experienced difficulty determining Cu, which they attributed to partial reduction of the Cu followed by binding to the Pt crucible. This problem can be alleviated by using graphite crucibles or preventing reduction of Cu by addition of a suitable oxidant. Norrish and Hutton[76], utilizing fusion to analyze for major elements, added the heavy absorber lanthanum oxide (to maintain constant detection limits) because it reduces background and fluorescent intensities equally. If it is not used, the fluorescent intensity will decrease linearly with dilution while the background intensity remains constant.

For the case of trace metals, some workers recommend omission of a heavy absorber since the La lowers the detection limits for trace element determinations due to x-ray line interferences between some of the analyte x-ray lines and the lines of the absorber. Of course, corrections for absorption must then be made. Use of more than one oxide absorber can be utilized to avoid x-ray line interference but this will substantially increase the sample preparation time. Because of the uniform matrix achieved with fusion, a background no longer needs to be measured for each sample. One determination of the background value can be made using the flux material containing non of the element

of interest and using the measured peak intensities to correct for the matrix of the material.

A technique similar to fusion is to dilute the solid sample with sulfur powder. Sulfur is chosen because it strongly absorbs x-rays, is available as a fine powder, does not yield x-rays in the energy range of priority pollutant metals, does not give rise to x-rays of sufficient energy to impose on the count-rate limitation of the system, and is self-binding for the preparation of discs. Regardless of the binding material that samples and standards are mixed with, it is desirable to prepare them as thin samples to minimize matrix absorption and absorption corrections. Specimens should not exceed the critical thickness for the x-ray energies of interest so that matrix enhancement and absorption effects are minimized, count-rate limitations are not reached on the x-ray detection system, and the intensity and total system geometry do not significantly vary with respect to the standards. Specimens must be thick enough, however, that favorable counting statistics can be obtained in a relatively short analysis time.

The benefits of fusion are the production of samples which are more stable than pressed powders, reduction of matrix effects, and the elimination of background determination on every sample. Despite these advantages, Pella, Lorber, and Heinrich[79] conclude that digital computation of x-ray absorption effects and correction for x-ray line interferences on pressed powder pellet samples is a superior technique to fusion with a heavy absorber especially when dealing with complex variable matrices and determining many elements. Fusion requires increased sample preparation time, the inconvenience of determining the correct mixture of heavy absorbers and correct dilution ratio, and yields lower detection limits due to sample dilution.

COSTS

XRF requires a larger capital investment than ICP, but supply costs are lower. The main additional cost is due to required access to a large minicomputer for sophisticated data reduction and correction procedures.

Capital Investment

$75-85K (Energy Dispersive) add $15-20K for sampler (30 positions)
$95K (Wavelength Dispersive, sequential)
$125K (Wavelength Dispersive - more intensity)
$350K (Wavelength Dispersive, Simultaneous, Deluxe)

There are several different commercial manufacturers who produce high quality systems capable of trace level analysis:

- Philips - Wavelength Dispersive and Energy Dispersive
- Kevex - Energy Dispersive

Expendables

$150/450 samples = 33¢ per sample based on a single questionnaire response which provided data on this area.

Sample Throughput

The rate-limiting steps are sample preparation and the acquisition of x-ray spectral data.

Operator Skill

A highly skilled operator is mandatory because of the large amount of data interpretation which is involved. Only an experienced operator will be aware of the potential problems of spectral interferences, matrix absorption effects, and background interferences that will occur when analyzing hazardous waste samples. This awareness is a prerequisite to application of appropriate correction techniques.

Commercial Services

$5-$100/sample depending on volume of samples and complexity of analyses. No commercial services offer determination of the 13 elements. The availability of commercial services is much more limited than ICP since XRF has traditionally not been used for trace level determinations. Its principal applications are major element determinations, aerosol analysis, and basic research.

SECTION 7

INSTRUMENTAL NEUTRON ACTIVATION ANALYSIS (INAA)

THEORY

Instrumental neutron activation analysis consists of detection of radioactive nuclei produced when a sample is exposed to a flux of neutrons. Upon bombardment of a sample, at least one isotope of each element can usually be transformed into a radioactive isotope. The energy content of the generated radionuclide is increased by an amount equal to the neutron binding energy plus the kinetic energy of the incoming neutron. Characterization and measurement of the energy of the emitted gamma rays yields qualitative and quantitative analysis of the sample.

$$\text{(Target Isotope)}^{A} \xrightarrow{n,\gamma} \text{(Radioactive Isotope)}^{B} \xrightarrow{\lambda_B} \text{(Stable Nuclei)}^{C}$$

Formation of the radioactive isotope B is dependent on the neutron flux density bombarding the sample (ϕ), the number of target nuclei present (N_A), and the reaction cross section (R). The rate of change in the number of radioactive nuclei is equal to the rate of their formation minus the rate of their decay (equation 14).

$$\frac{dN_B}{dt} = RN_A\phi - \lambda_B N_B \tag{14}$$

Integrating over the bombardment time and taking into account the delay time prior to analysis, the relationship between activity and element concentration (equation 15) is given by:

$$D_B = \frac{NWF_A R\phi}{M_A}\left(1-e^{-\lambda_B t_b}\right)e^{-\lambda_B t_d} \tag{15}$$

where

D_B = activity at the beginning of a measurement
N = avogadro's number
W = element weight

F_A = fractional abundance target isotope A
R = reaction cross section
ϕ = neutron flux
M_A = atomic weight of isotope A
λ_B = decay constant of radionuclide
t_b = length of bombardment time
t_d = delay time before activity is measured

The radionuclide half-life, T(1/2), is related to the decay constant (equation 16).

$$\lambda_B = \frac{\ln 2}{T(1/2)} = \frac{0.693}{T(1/2)} \tag{16}$$

For elements which have several stable isotopes capable of forming radionuclides, it is usually desirable to choose the isotope with the largest value for the product of its isotopic abundance and its cross section. It is also important that half-lives be long enough that the radiations are still detectable when measurements start, but not so long that associated activity would not be high compared to background activity. The energy of the chosen isotope must also be sufficiently intense to be measured by a gamma-ray detector system. For multielemental analysis of a sample it is also desirable to choose elemental isotopes that will minimize interferences of the emitted gamma-rays. The choice of the appropriate isotope to use for each element may therefore be a compromise between achieving sufficient resolution and adequate detection.

Equation 15 allows element concentrations to be calculated directly without the use of standards provided all parameters are known. An analysis is never conducted this way because of the inability to ensure the constancy of the neutron flux and the uncertainty in the value of R. Better precision and accuracy are obtained if samples and standards are irradiated simultaneously, taken through similar post-irradiation steps and the concentrations in the samples derived by comparison with the activities measured in the standards.

INSTRUMENTATION

The INAA procedure consists of irradiating samples and standards with a specific neutron flux for a measured period of time (t_b), allowing the specimens to decay for a period of time (t_d), counting γ-rays at the appropriate energy levels for a period of time (t_c), and calculating concentrations from activity values. The instrumentation consists of a detector coupled with a multi-channel gamma-ray spectrometer. Access to a neutron source is also necessary. Nuclear reactors, neutron generators and isotopic sources are the three available neutron-generation sources, but only the reactor is capable of producing a flux large enough to analyze elements present in trace quantities. Because reactors are prohibitively expensive and require a permit, laboratories interested in developing INAA capabilities will usually obtain access to an existing reactor or have irradiation performed by a commercial laboratory.

INAA resolution has improved considerably since Ge(Li) and more recently intrinsic Ge detectors have replaced NaI(Tl) scintillation detectors. Ge(Li) detectors can distinguish between gamma rays with an energy difference as little as one keV. Elemental analysis of complicated matrices can now be achieved with INAA while radiochemical separations were often required to achieve adequate resolution using a NaI(Tl) detector. The efficiency of a Ge(Li) detector is dependent on its size and shape. The smaller Ge(Li) detectors have lower efficiency but better resolution. In order to achieve both adequate detection limits and resolution, a sample may be analyzed with two different-size detectors. Limited compensation for the lower efficiency of a smaller Ge(Li) detector can be made by increasing the counting time irradiation time or neutron flux. Maintenance costs for Ge(Li) detectors are higher than NaI(Tl) costs because liquid N_2 is needed to keep the detector operational and more expensive electronic amplification is required to amplify the smaller output signal.

DETECTION LIMITS

The sensitivity and detection limit for each element are dependent on the particular radionuclide which is monitored. Table 13 lists all the available gamma-emitting radionuclides and half-lives for the radioisotopes produced by each of the 14 specified elements plus the reaction cross sections and isotopic abundance of the parent isotopes. The ideal choice is the radionuclide with the largest value for the produce F·R of the parent isotope and the largest value for the product F·R·λB when the radionuclide is long-lived.

TABLE 13. NUCLIDES AVAILABLE IN INAA FOR THE SELECTED ELEMENTS

Radionuclide	Reaction Cross Section (R) (barns)	Isotopic Abundance (%)	Half-Life, T(1/2)
(1) Ag^{108}	2 + 38	51.8	1.3×10^2 yrs
Ag^{110}	4.4 + 88	48.17	252 days
(2) As^{76}	4.4	100	26.3 hours
(3) Ba^{139}	0.4	71.7	83 min.
			38.9 hours
Ba^{133}	0.7	0.10	10.7 years
			14.6 min.
Ba^{131}	13.5	0.11	11.7 days
(4) Be^{10}	-	100	No gammas
(5) Cd^{109}	1.1	0.89	453 days
			48.7 min.
Cd^{111}	0.1 + 11	12.5	12.8
			44.6 days

(continued)

TABLE 13. (Continued)

	Radionuclide	Reaction Cross Section (R) (barns)	Isotopic Abundance (%)	Half Life, T(1/2)
	Cd^{115}	0.04	28.7	53.4 hours 3.4 hours
	Cd^{117}	0.2 + 0.8	7.5	2.6 hours
(6)	Cr^{51}	15.8	4.4	27.7 days
	Cr^{55}	0.36	2.36	3.6 min.
(7)	Cu^{64}	4.4	69.2	12.7 hours
	Cu^{66}	2.17	30.8	5.1 min.
(8)	Hg^{197}	120 + 310	0.15	23.8 hours 64.1 hours
	Hg^{199}	0.017 + 2	10.0	42.6 min.
	Hg^{203}	4.9	29.8	46.6 days
	Hg^{205}	0.4	6.9	5.2 min.
(9)	Ni^{65}*	1.5	0.9	2.5 hours
	Ni^{58} via Co^{58}	0.2	--	71 days
(10)	Pb^{205}	0.66	1.42	1.4 x 107 u
	Pb^{207}	0.030	24.1	0.796 sec.
	Pb^{209}	-	52.4	No gammas
(11)	Sb^{122}	5 + 200	57.3	4.2 mins. 2.72 days
	Sb^{124}	130	42.7	20.3 min. 60.2 days
(12)	Se^{75}	5200	0.9	120 days
	Se^{81}	0.07	49.8 49.8	57.3 min. 18.5 min.
	Se^{83}	0.04	9.2	69 sec. 22.3 min.
	Se^{77}	21 + 64	9.0	17.4 sec.
(13)	Tl^{204}	11	29.5	No gammas
	Tl^{206}	0.10	70.5	3.6 min.
(14)	Zn^{65}	0.76	48.6	243.8 days
	Zn^{69}	0.072 + 0.9	18.8	13.8 hours
	Zn^{71}	0.0081 + 0.083	0.62	2.4 min. 3.97 hours

*Iostopic Abundance too low for determination.

In the case of multielemental analysis, detection capacity must sometimes be sacrificed in order to avoid serious interferences with the other elements being determined and the major matrix constituents. Beryllium cannot be analyzed by INAA because it forms no gamma-emitting radionuclide. Only one gamma-emitting nuclide exists for Pb and Tl, and the very low reaction cross section for these nuclides implies poor detection limits for Pb and Tl determinations by INAA.

Instrumental variables which affect the detection limits are the irradiation time, decay time, detector efficiency and neutron flux. Detection limits can typically be improved by a factor of $10-10^3$ if the irradiation time and neutron flux are increased. INAA is based on radioactive counts which obey the Poisson distribution (unless the number of counts is large and a normal distribution is approximated). The definition of detection limits is typically based on the work of Currie and, as for XRF, it is not clear whether a particular author is using the Poisson- or Normal-distribution definition.

The median detection limits for the elements in assorted matrices (such as rock, coal, sand, liver and leaves) are shown in Table 14. No data for Pb and Tl were included because the high detection limits reported (>100 parts per thousand) are outside the concentration range of interest. The detection limits for Ba and Ni are significantly higher than any of the other elements with values of approximately 50 and 150 μg/g, respectively. Ni has only one γ-emitting radionuclide and the parent isotope abundance is too low for accurate determination. Ni^{58}, when irradiated, will emit a proton and form Co^{58}, which can be used for Ni determinations. The high detection limit observed for Ni is probably due to the low reaction cross section of the Ni^{58} to Co^{58} reaction in reactors which have only a small component of fast neutrons. With reactors having a fast/slow neutron ratio of approximately 1, the Ni detection limit is about an order of magnitude better. The poor detection limit for Ba is probably due to severe interference from Fe which is very abundant in many types of samples. An alternative explanation for the high Ba and Ni detection limits is the fact that the Ba and Ni databases were dominated by values reported by a commercial laboratory which may not have been striving for optimum performance. The detection limits for the remaining elements are all under 10 μg/g.

TABLE 14. MEDIAN OF REPORTED INAA DETECTION LIMITS*

Element	Detection Limit (μg/g)	Element	Detection Limit (μg/g)
Ag	2 (5)	Hg	0.6 (5)
As	1 (6)	Ni	160 (5)
Ba	53 (7)	Pb	NA
Be	NA	Sb	0.6 (7)
Cd	8 (6)	Se	0.6 (9)
Cr	3 (7)	Tl	NA
Cu	6 (6)	Zn	5 (7)

*Parantheses contain the number of reported detection limits
NA = Not Available

ACCURACY AND PRECISION

In theory, INAA precision should be primarily a function of counting statistics. Other errors are minimized by matching counting geometry and irradiation conditions for samples and standards and using a high resolution Ge(Li) analyzer. Accuracy should be excellent since most interfering elements are not present in large abundance in most terrestrial samples.

The mean precision (percent RSD) and accuracy (percent of true value) for each element determined by INAA as a function of concentration is shown in Table 15. These graphs exhibit the same trend with concentration as the precision and accuracy versus concentration data for ICP and XRF. Precision improves with increasing concentration while the accuracy is excellent for the high levels but poor for some of the elements at low levels (<10 μg/g). No data was collected for Ag, possibly because its detection limit near 1 μg/g is comparable or larger than the level in most terrestrial materials used as SRMs. The precision exceeds 20 percent for As at the 10-μg/g level, for Ba at 100 μg/g, for Cr at 10 μg/g, for Ni at 100 μg/g, and for Sb at <1 μg/g. The poor Ni precision probably reflects measurements with reactors having few fast neutrons, while Ba suffers from Fe interference. The acccuracy becomes unacceptable (exceeds arbitrary 20 percent error criterion) at a level of 10 μg/g for Cd, 10 μg/g for Cr, <1 μg/g for Hg, 10 μg/g for Ni, and 10 μg/g for Sb. The Cu datum is not considered significant since it is based on only one piece of data.

SOURCES OF ERROR

Analytical errors in INAA occur when factors affecting the formation of the radioactive isotope or detection of the emitted radiation differ significantly between the sample and the standard. Formation of the radioactive isotope is dependent on the neutron flux density, the number of target nuclei, and the reaction cross section. The number of target nuclei and the reaction cross section are intrinsic properties of the sample, and variations in the flux density hitting samples and standards are trivial due to constant rotation of the specimens within the reactor. It is primarily the detection of the emitted gamma-rays which is a potential source of error. The accuracy of the total photopeak count must be corrected for systematic errors arising from spectral interferences, peak-broadening errors absorption errors and instrument dead time losses. Random errors result from counting statistics and procedural uncertainties.

Spectral Interferences

Spectral interference occurs when the gamma-ray radiation emitted by a matrix element cannot be resolved from the radiation emitted by the element of interest. The most common interferences result when different nuclear reactions produce the same radionuclide. An example is the formation of Cr^{51} from Fe^{54} through loss of an alpha particle which will interfere with a Cr determination. Radioactive decay catalogues are useful tools for predicting interferences but more obscure interferences such as pile-up peaks will be overlooked. Pile-up peaks result when 2 γ-rays are counted coincidentally. If the

TABLE 15. MEAN PRECISION AND ACCURACY BY INAA

Element	Concentration Range (µg/g)	Precision (percent RSD)	Accuracy (percent recovery)
Ag		NA*	NA
As	Below 1	12	105
	1-10	36	97
	10-100	9	NA
Ba	1-10	NA	103
	10-100	39	NA
	100-1000	5	102
Be	-	NA	NA
Cd	1-10	NA	58
	10-100	NA	96
Cr	Below 1	29	NA
	1-10	24	78
	10-100	6	106
Cu	10-100	13	130
Hg	Below 1	NA	150
	1-10	NA	90
	10-100	NA	90
Ni	Below 1	300	NA
	1-10	136	35
	10-100	38	94
	100-1000	14	104
Pb	10-100	NA	108
	100-1000	NA	88
	Above 1000	NA	95
Sb	Below 1	58	64
	1-10	14	160
Se	1-10	8	100
Tl	-	NA	NA
Zn	10-100	10	NA
	100-1000	8	NA
	Above 1000	1	NA

NA = Not Available

energy sum of these coincident peaks is in the neighborhood of the peak of interest, an interference results. Table 16 lists the INAA spectral interferences for the elements of interest.

Several procedures are available for attempting to eliminate spectral interferences. Peak resolution of interfering radionuclide emissions can sometimes be achieved using a small Ge(Li) detector with optimal resolution. If resolution still cannot be achieved, the contribution from the interferent peak may be removed by determining the photopeak area of the interferent at another gamma-ray energy line, and subtracting the interferent value from the peak of interest. Interference effects can sometimes also be minimized by adjustment of the irradiation time. Lowering the irradiation time may alleviate the interference if the element of interest was being obscured by the high matrix activity being produced at the longer irradiation times. The reduced detection limits which result from a decreased irradiation time must be tolerable. If none of these correction techniques work, it may be necessary to switch to a different energy line even if this substantially reduces the detection limits. A final, more elaborate, method of interference correction involves an extension of the counting technique by using NaI(Tl)-Ge(Li) coincidence measurements. The coincidence/non-coincidence counting technique utilizes both NaI(Tl) and Ge(Li) detectors operating simultaneously. Gamma-ray emissions detected by both detectors are stored in half of the channel memory as coincidence events while events seen only by the Ge(Li) are stored in the other half of the memory as non-coincidence events. This separation results in a significant reduction of the Compton background and interference effects which leads to greatly improved detection limits. Overall, non-coincidence counting will increase accuracy and relative precision for many elements by a factor of appoximately 10 relative to simple Ge(Li) counting.

Absorption Errors

Errors caused by matrix absorption of an activated element's emitted γ-rays is rarely a problem unless elements with large γ-absorption cross sections are present in the sample and not in the standard.

Dead-Time Loss

Instrument dead time is the non-responsive period when the instrument is accepting one signal impulse. When the signal rate exceeds a certain level, the proportion of impulses that are recorded decreases. Dead-time correction involves compensation based on the signal rate.

Counting Statistics Errors

In accordance with normal distributions, the error due to the statistics of radioactive counting is given by the square root of all the counts used to measure a particular element ($\sqrt{\text{Gross peak count + background count}}$). Determination of strongly activated elements or large concentrations will yield a large number of counts and small errors. The number of counts is also dependent on the count time and detector efficiency. The dispersion in the precision can be expressed by the root-mean-square deviation. Separation of the

TABLE 16. PRINCIPAL INTERFERENTS IN INAA FOR THE SELECTED ELEMENTS

Radionuclide	Interferents
(1) As^{76} (559 keV)	Br^{82} (554 keV), Cs^{193} (558 keV), Ge^{77} (563 keV), Sb^{122} (564 keV)
(2) Ba^{131} (123.7 keV)	Eu^{154} (123.1 keV)
Ba^{131} (496 keV)	Cd^{115} (~493 keV), Ce^{143} (493 keV), Pd^{103} (498 keV), U^{235} (n,fission), Ru^{103} (497 keV)
Ba^{139} (166 keV)	Ce^{139} (165 keV), Np^{239} (166 keV), Ce^{139} (166 keV, Mg^{27} (171 keV), Ce^{137m} (168 keV), Ce^{137m}(169), U^{235} (n,fission), Ba^{139} (166 keV)
(3) Cr^{51} (320 keV)	Ta^{182} (100+222=322 keV), Pd^{109} (~310 keV), Ir^{192} (317 keV), Nd^{147} (319 keV), Ir^{194m} (~320 keV), Pt^{199} (~320 keV), Os^{193} (322 keV), Ru^{97} (324 keV), Fe^{54} (n, α) Cr^{51} Lu^{177} (113+208=321 keV)
(4) Cu^{64} (511 keV)	Cd^{115} (~490 keV), Te^{121} (508 keV), Mo^{101} (~510 keV), Co^{58} (511 keV), Zn^{65} (511 keV), Br^{80} (511 keV), Kr^{79} (511 keV), Kr^{85} (514 keV), Cd^{107} (511 keV), Sr^{85} (514 keV), Se^{83} (~520 keV), Na^{24} (511 from pair production)
(5) Ni^{58} via Co^{58} (810 keV)	Ca^{47} (807 keV), Ho^{166m} (810 keV), La^{140} (815 keV)
(6) Sb^{122} (564 keV) Sb^{124} (1692 keV)	As^{76} (559, <u>563 keV</u>*), Cs^{134} (563, 569 keV)
(7) Se^{75} (136 keV)	Hf^{181} (137 keV)
(8) Zn^{65} (1116 keV)	Te^{121m} (~1100 keV), Er^{163} (~1100 keV), Ce^{143} (~1100 keV), Kr^{79} (1119 keV), Zn^{71m} (~1100 keV), Sc^{46} (1120 keV), Eu^{152} (1113 keV), Tb^{160} (1115 keV)

* Only underlined values are significant in high precision measurements.

counting errors yields a residual dispersion resulting from procedural uncertainty. This uncertainty (which is smaller than 1% at the Lawrence Berkeley Laboratory) arises from small residual random errors due to variations in neutron flux, variations in specimen geometry, small dead-time errors in the analyzer system and random errors in sampling and weighing.

CORRECTION METHODS

For experienced, high-quality laboratories (e.g., the Lawrence Berkeley Laboratory) precision is well-represented by counting statistics and other errors have been held to low values by intensive investigation of the causes of these errors. The accuracy of the analysis of an unknown sample can be checked by determining a particular element several times utilizing a different-energy gamma ray each time, by measuring the same gamma ray by different detectors, or re-measuring the gamma ray at a later time when the Compton-scattering background has changed.

Use of several irradiations for different periods and counting after different decay periods eliminates many of the potential sources of error. Short irradiation times allow the analyst to obtain data for short-lived isotopes without generating high specific activity from longer lived isotopes (with a potential for large dead-time corrections). Alternate decay periods make it easy to resolve peaks of similar energy but different half-lives. Adequate computer software is essential for performing these computations.

SAMPLE PREPARATION

INAA involves no elaborate sample preparation procedure. Solids are ground and a representative aliquot is mixed with cellulose and pressed into a standard size pill. Care should be exercised to ensure that the analyzed aliquot represents the bulk sample. Analysis of several aliquots can serve to demonstrate the homogeneity of a sample material. Use of a standard pill size ensures maintaining the solid angle from the pill to the detector which relates directly to the accuracy of the method. Cr contamination at the level of 0.5 μg/g sometimes results from the tool-steel dies used to prepare the pellets. Solutions can be analyzed after freeze drying and pelletizing the resulting powder.

COSTS

Capital Investment

$500K (requires permit)	Nuclear Reactor*
$135 and up depending on required length of irradiation, sample size, and neutron flux	Commercial Irradiation Cost (for short-lived isotopes the detector must be at the irradiation site)
$30K and up	Gamma-Ray Spectrometer & Detector

*or access to irradiation source

Expendables

Expendable costs are largely dependent on number of samples analyzed. Based on a single questionnaire response, costs were estimated to be $1-$2 per sample for expendables and approximately $2-$3 per sample for labor.

Sample Throughput

The rate-limiting step is the time required before interfering radiation has decayed sufficiently to allow long-lived isotopes to be counted. This can be as long as 30 days for the analysis of long half-life isotopes such as Cr^{51}. Throughput can also depend on the cross sections of matrix interferents as well as the half-life of the element of interest. If matrix elements become highly radioactive, it may be difficult to detect the small amount of radiation emitted by a trace element. In this case, provided the interferents have shorter half-lives than the elements of interest, it is necessary to wait until the interfering radiation has decayed away before counting the sample.

Operator Skill

As in XRF, a highly skilled operator with a large amount of experience is required for successful analysis by INAA because of the complexity of interferences which occur.

Commercial Services

Typical cost for single sample multielemental analysis is $400 with delivery times of 5-6 weeks after receipt of sample. Availability of commercial services is quite limited because of the difficulties in acquiring access to a nuclear reactor. Services which use university reactors are available, but typically only on a research basis and not for routine analyses. It is possible to perform INAA using a radioactive element as a neutron source (such as Cf^{254}), but the flux obtained from such a source is typically not adequate for trace level work.

SECTION 8

COMPARISON

INTRODUCTION

Comparison of the three techniques is based on the following parameters:

- Detection Limits
- Accuracy and Precision
- Interferences
- Flexibility
- Sample Preparation
- Cost
- Throughput
- Availability

Table 17 provides an overall comparison of the three techniques by ranking them for each of these factors.

TABLE 17. RANKING COMPARISON OF ICP, XRF AND INAA

Characteristic	Relative Ranking (Best to Worst)
(1) Rapid analysis	XRF>ICP>INAA
(2) Detection Limits	ICP, INAA>XRF
(3) Precision and accuracy	ICP>INAA,XRF
(4) Ease of error corrections	INAA, ICP>XRF
(5) Low cost	ICP>XRF>>INAA
(6) Flexibility	ICP, INAA>XRF
(7) Availability	ICP>XRF>INAA
(8) Ease of sample preparation	INAA>XRF>ICP

DETECTION LIMITS

Table 18 summarizes the median detection limits for each element as a function of instrumental technique. Conversion of the aqueous mg/l ICP detection limit units into (μg/g) solids for this table was made by assuming digestion of 100 mg of solid sample with 10 ml of acid. Division by 10 will convert

TABLE 18. COMPARISON OF MEDIAN DETECTION LIMITS FOR ICP, XRF AND INAA

Element	Method		
	ICP (µg/g)	XRF (µg/g)	INAA (µg/g)
Ag	0.3	--	1
As	3	0.9	0.2
Ba	0.05	10	53
Be	0.05	--	--
Cd	0.2	5	15
Cr	0.3	1	2
Cu	0.2	1	6
Hg	3	2	0.3
Ni	0.8	1	160*
Pb	2	2	--
Sb	3	--	0.08
Se	2	13	0.3
Tl	2	--	--
Zn	2	3	5

* Results for Ni probably biased by database (see INAA section).

µg/l to µg/g which enables direct comparison of ICP detection limits with those obtained for XRF and INAA. The detection limits of ICP and INAA is slightly superior to XRF.

ICP is the only technique capable of determining all 14 specified elements. Beryllium cannot be determined by INAA (because its radionuclide emits no gamma rays) nor conventional by XRF (because the long wavelengths of the emitted x-rays cannot be dispersed). Pb and Tl are too weakly activated to be successfully determined by INAA, except at very-high concentrations. The lack of a substantial database for many trace elements by XRF reflects its common use as a major-element technique.

ACCURACY AND PRECISION

Comparisons are provided in Tables 19 and 20 of the reported precision and accuracy for the 14 specified elements by the three techniques. Only data collected on rock, sediment, soil, sludge, coal, oil, steel or pottery were considered since these sample types most closely approximate hazardous waste matrices. The comparisons in Tables 19 and 20 were made by calculating the percentages of "acceptable" precision and accuracy data each technique produced. For this comparison, acceptable precision was arbitrarily defined as a relative standard deviation not exceeding 20 percent and acceptable accuracy was arbitrarily defined as a percentage of the true value between 80 percent and 120 percent. For some of the elements, insufficient data were available for all three techniques to allow a valid comparison. This is the case for Ag, Be, Cd, Cu, Hg, Pb, Sb, Se, and Tl precision data. There is only sufficient precision data by all 3 techniques for comparison of As, Ba, Cr, Ni and Zn. For Ba and Zn, the differences in the percentages of acceptable precision among

TABLE 19. PERCENTAGE OF CASES WITH ACCEPTABLE PRECISION*

Element	Percentage Acceptable		
	ICP	XRF	INAA
Ag	80 (5)**	NA	NA
As	86 (7)	60 (5)	54 (11)
Ba	100 (12)	92 (12)	92 (35)
Be	100 (7)	NA	NA
Cd	95 (27)	0 (1)	NA
Cr	100 (28)	80 (34)	77 (26)
Cu	88 (49)	70 (17)	100 (1)
Hg	NA	NA	NA
Ni	84 (43)	81 (38)	47 (15)
Pb	97 (30)	82 (11)	NA
Sb	100 (2)	NA	54 (13)
Se	NA	100 (1)	100 (2)
Tl	NA	NA	NA
Zn	97 (40)	100 (20)	92 (12)

*Acceptable precision defined arbitrarily as a 20 percent relative standard deviation.
**Parentheses contain the number of cases.
NA = Not Available

the three techniques are insignificant. ICP provided more high-precision results than the other two techniques for most of the elements.

Inspection of Table 20 indicates insufficent data for Ag, Be, Hg, Sb, Se and Tl. Of the eight remaining elements, ICP gave more high-recovery data than the other two techniques for Cd, Cr, Cu and Ni. There is insufficient data for comparison of As by XRF and INAA. INAA gave better results for Ba, and XRF gave better results for Zn. The case of Pb is somewhat misleading as it appears that INAA gave comparable results to XRF. This observation would be disturbing since INAA is known to be a poor trace technique for Pb. Closer inspection revealed that the INAA Pb results are based on only four samples with extremely high levels of Pb. A summary of the results given in Table 21 clearly indicates that, overall, higher precision and accuracy for a majority of the elements are obtained with ICP.

INTERFERENCES

The analysis errors involved in any of the three techniques can be attributed to specific causes. Random errors which affect the precision can be caused by instrumental drift or may arise from counting errors for INAA and XRF. Systematic errors which affect accuracy result from spectral interferences occuring in the sample matrix as well as remaining nonspectral interferences such as matrix absorption or background interference. Sample preparation errors may be either systematic or random.

TABLE 20. PERCENTAGE OF CASES WITH ACCEPTABLE ACCURACY*

Element	Percentage Acceptable		
	ICP	XRF	INAA
Ag	69 (16)**	NA	NA
As	85 (13)	100 (2)	100 (2)
Ba	89 (36)	78 (71)	100 (16)
Be	53 (15)	NA	NA
Cd	58 (26)	25 (4)	50 (4)
Cr	68 (54)	64 (79)	53 (18)
Cu	94 (76)	62 (39)	0 (1)
Hg	NA	NA	80 (5)
Ni	80 (47)	78 (90)	38 (13)
Pb	58 (63)	70 (34)	75 (4)
Sb	NA	NA	14 (7)
Se	NA	100 (1)	100 (1)
Tl	NA	NA	NA
Zn	81 (43)	97 (49)	88 (17)

*Acceptable accuracy defined arbitrarily as recovery between 80-120%.
**Parentheses contain the number of cases.
NA = Not Available

Table 22 indicates the relative importance of these error sources for the three techniques. For both INAA and XRF, the counting errors are least significant and never amount to more than 1 percent. For XRF, sample preparation is the most important source of error because it is directly related to the non-spectral errors which are a major problem in XRF. Unless sample preparation is adequate, good data will never be generated no matter how elaborate the non-spectral correction procedures are. Obviously, non-spectral errors rank second in importance followed by spectral interference errors and then instrumental errors. The different types of spectral interferences are well documented and can usually be anticipated and corrected. Adequate correction for spectral and non-spectral errors is completely dependent on the operator's skill and experience. Instrumental error results in a small residual background. This error can be corrected by plotting the spectral background as a function of the Compton-scattered radiation and discerning the value of the y-intercept. For INAA, both instrumental and sample-preparation errors are minimal. The major source of error is spectral interference and again the major requirement for adequate correction is an experienced operator (skilled in making comparative cross-checks for an element by measuring different gamma-ray emissions).

The major source of error for ICP is sample preparation because of the potential for contamination or loss of analyte during this step. Spectral interference is the next most important source of error again because correction depends on the skill and experience of the operator in recognizing these

TABLE 21. RANKING OF TECHNIQUES BY ELEMENT

Element	Precision	Accuracy
Ag	No data for INAA, XRF	No data for INAA, XRF
As	ICP>INAA, XRF	Insufficient data for INAA, XRF
Ba	ICP>XRF, INAA	INAA>ICP>XRF
Be	No data for INAA, XRF	No data for INAA, XRF
Cd	No data for XRF Insufficient data for INAA	ICP>INAA>XRF
Cr	ICP>INAA, XRF	ICP>XRF>INAA
Cu	ICP>XRF Insufficient data for INAA	ICP>XRF Insufficient data for INAA
Hg	No data	No data for ICP, XRF
Ni	ICP>XRF>INAA	ICP, XRF>INAA
Pb	ICP>XRF No data for INAA	XRF>ICP Insufficient data for INAA
Sb	ICP>INAA No data for XRF	No data for ICP, XRF
Se	Insufficient data	Insufficient data
Tl	No data	No data
Zn	ICP, XRF>INAA	XRF>INAA>ICP

TABLE 22. RANKING OF ERROR SOURCES FOR THE TECHNIQUES

	Sample Prep	Instrumental	Counting	Non-Spectral	Spectral
ICP	1	3	--	4	2
INAA	3	4	5	2	1
XRF	1	4-5	5	2	3

1 = High (very important)
5 = Low (trivial)

errors. Instrumental drift is usually not a serious problem if re-calibration is performed periodically, and computer corrections for non-spectral background interferences are usually quite adequate.

Table 23 outlines the various combinations of analytical measurements which can be utilized to separate these five sources of error in order to quantify each source individually. Although insufficient information was found in the literature to be able to achieve this type of error analysis with the collected data, the outline in Table 23 could be applied to an experimental comparison of the three methodologies. Separation of all the different sources of error can be achieved except for separation of the spectral and non-spectral interferences.

TABLE 23. ANALYTICAL DEFINITIONS OF RANDOM AND SYSTEMATIC ERRORS

Error	Analytical Definition
1. Instrumental and counting error	Precision of replicate analyses on one sample
2. Instrumental and counting and random sample prep error	Precision of one analysis on replicate samples
3. Random sample prep	(2) minus (1)
4. Counting error (INAA and XRF)	$\sqrt{\text{Total Counts}}$
5. Instrumental Error (INAA and XRF)	(1) minus (4)
6. Random sample prep and systematic sample prep and spectral and non-spectral error	Accuracy of replicate determinations on one sample
7. Systematic sample prep and spectral and non-spectral error	Accuracy of one determination on replicate samples
8. Spectral and non-spectral error	Accuracy of one determination on replicate standard reference materials by two different methods (e.g., ICP and AAS)
9. Systematic sample prep error	(7) minus (8)

FLEXIBILITY

ICP also has advantages in terms of flexibility. With a scanning monochromator, it is easy to switch to a different spectral line without the rigid time constraints involved in INAA. For the case of XRF, there is little choice

in the fluorescent energy which can be monitored for a particular element since only a limited number of energies are available.

SAMPLE PREPARATION

The one area where ICP lags behind INAA and XRF is in ease of sample preparation. Since conventional ICP is not suited for the direct analysis of solids, a digestion step is needed, which adds expense and potential for errors. However, sample digestion does serve to homogenize the aliquot before the analysis.

COST

ICP is the least costly of the three techniques, both in terms of capital investment and operating costs. In addition, commercial services for ICP are low in cost compared to XRF or INAA. The cost of operating an XRF system is comparable to ICP although more extensive computer facilities are required. The expense of operating an INAA system is on the order of 5 to 10 times that of ICP or XRF and even commercial service fees are 5 to 10 times higher.

Throughput

XRF is far superior to ICP and INAA in its ability to generate a rapid semi-quantitative analysis scan of a sample in less than 5 minutes. The sample preparation time for ICP takes well over an hour while INAA requires weeks to allow sample activity decay for certain elements. XRF could, therefore, have utility as a preliminary screening technique for hazardous waste samples of totally unknown composition.

Availability

There are currently many more manufacturers of ICP systems and greater availability of this commercial service than for XRF and, especially, for INAA. In the case of XRF or INAA commercial services, the higher skill levels required for accurate interference corrections at trace levels make the actual choice of commercial laboratories important in achieving accurate results. For ICP this is less crucial since most commercial software incorporates appropriate corrections.

Conclusions

After considering the detection limits, precision, accuracy, errors and correction procedures, expense, flexibility, availability and sample preparation, ICP appears to be most amenable of the three techniques to analysis of hazardous waste samples while XRF may be useful as a preliminary screening technique. There is an insufficient database in the literature for some of the specified elements. A literature review suffers from:

a. A lack of comparable databases for individual techniques with respect to sample types, definition of detection limits, and elements.

b. An inherent bias exists that published data are typically the best available and not indicative of what may be observed in routine applications.

Because of these problems, a fully satisfactory comparison of the methods must be based on analyses of identical wastes by the techniques.

REFERENCES

1. Abercrombie, F. N. and Cruz, R. B., "Determination of Trace Inorganic Toxic Substances by Inductively Coupled Plasma - Atomic Emission Spectroscopy," ACS Symposium Series No. 94, 174th Symposium Meeting of ACS, Monitoring Toxic Substances, Chicago, Illinois, August 31, 1977, pp. 113-135 (1979). Precision and accuracy data for Ba, Zn, Ni, Cu, Be, Sr, and V in standard rocks. Description of operating principles and types of nebulizers. Discussion of sample dissolution procedures and interference corrections for spectral interferences.

2. Abercrombie, F. N., Silvester, M. D., and Cruz, R. B., "Simultaneous Multielement Analysis of Biologically Related Samples with RF-ICP," ACS Advances in Chemistry No. 172, Ultratrace Metal Analysis and Biologically Science and Environment, pp. 10-26 (1979). Precision and accuracy data for various trace and major elements in biological matrices such as orchard leaves, bovine liver, grains, and fish. $HNO_3/HClO_4$ reflux digestion used on all samples.

3. Ackermann, F., Bergmann, H., and Schleichert, U., "On the Reliability of Trace Metal Analyses: Results of Intercomparison Analyses of a River Sediment and Estuarine Sediment," Fresenius Z. Anal. Chem., 296, pp. 270-276, (1976). Determination of all 14 EPA-regulated elements, with the exception of Be and Tl, in river and estuarine sediment. Interlaboratory evaluation of AAS vs. INAA indicated more difficulties with analysis by AAS for the estuarine sediment. Enumeration of sources of INAA systematic error.

4. Ajar, R. M., Dalager, P. D., and Davison, A. L., "Multielement Analysis with an Inductively Coupled Plasma/Optical Emission System," American Laboratory (March 1976). Description and operation of plasma. Instrumental detection limits of 2 x standard deviation of background given for all priority pollutant metals except As and Tl. Cu precision data as a function of concentration indicates substantial reduction in percentage RSD at the 0.1 ppm level.

5. Asaro, F., "Analysis of ARCHO-1," Lawrence Berkeley Laboratory Publication, pp. 1-16, (November 9, 1976). Analysis of basalts by INAA, soft XRF, hard XRF, and wet chemical methods for major elements. Trace element results and precision were reported for the method giving the best values. The INAA calibration procedure and errors of measurement are also discussed.

6. Asaro, F., "Analysis of ARHCO-1," Lawrence Berkeley Laboratory Publication, pp. 1-16, (November 9, 1976). Analysis of basalt by INAA and soft and hard x-rays. Precision data generated from 1-7 replicate analyses on duplicates. Discussion of INAA sources of error.

7. Asaro, F., "Applied Gamma-Ray Spectrometry and Neutron Activation Analysis," Colloquium Spectroscopicum Internationale, International Conference on Atomic Spectroscopy, Praha 1977, pp. 413-426, (1977). Discusses factors affecting precision and accuracy. None of the 14 EPA regulated metals are represented in the precision data.

8. Asaro, F., Michel, H. V., and Burger, R. L., "Chemical Source Groups in Ecuadorian Obsidian," Lawrence Berkeley Laboratory Report 13247, pp. 1-27, (1981). Analysis of archaelogical obsidian by INAA using XRF as a preliminary screening technique. Precision represented by counting statistics since other random errors and systematic errors were held below 1%. Major systematic error is uncertainty of the standard pottery used for calibration.

9. Bazan, F. and Bonner, N. A., "Absorption Corrections for X-Ray Fluorescence Analysis of Environmental Samples," Advances in X-Ray Analysis, Vol. 19, pp. 381-390, (1976). Demonstration of a linear relationship between the absorption coefficient of an element and the ratio of the Compton to Rayleigh scattering by the sample containing the element. This eliminates the need to measure the absorption coefficient for each sample in a set of samples with similar matrices.

10. Billiet, J., Dams, R., and Hoste, J., "Multielement Thin Film Standards for XRF Analysis," X-Ray Spectrometry, Vol. 9, No. 4, pp. 206-211, (1980). Methodology for preparation of thin-film multielemental standards using a tracer to accurately derive concentrations. Calculated elemental concentrations were validated by ICP and INAA analysis. These standards are also useful to check the empirical correction factors for x-ray absorption. XRF analysis of these polymer standards generated precision data and indicated an accuracy problem for As, possibly due to volatilization during preparation or irradiation.

11. Brady, F. P. and Cahill, T. A., "Development of X-Ray Fluorescence Analysis and Applications," Final Report to the NSF Division of Research Applied to National Needs, pp. 1-116, (April 30, 1973). Discussion of development and current methodology for XRF and ion-excited x-ray emission. Focuses on instrumentation, calibration, sample preparation techniques, spectral corrections, and matrix absorption corrections. Specific application programs are also discussed.

12. Boumans, P. W. J. M., Bastings, L. C., de Boer, F. J., and Van Kollenburg, L. W. J., "ICP-Atomic Emission Spectroscopy as a Tool for Flexible Single Element Analysis of Non-Routine Samples," Fresenius Z. Anal. Chem., 291, pp. 10-19 (1978). Examines use of ICP for single-element determinations in non-routine matrices. Gives detection limits for 44 elements under the compromise conditions used for simultaneous multielemental analyses and investigates matrix salt effects.

13. Boumans, P. W. J. M., "Inductively Coupled Plasmas (ICP): State-of-the-Art in Research and Routine Analysis," Colloquium Spectroscopicum Internationale and International Conference on Atomic Spectroscopy, Praha 1977, pp. 7-25 (1977). Description of instrumentation and comparison of nebulizers. Discussion of physical and spectral interferences. Concludes that the precision is limited by nebulizer stability. Review of ICP applications.

14. Bradbury, H., "Biological Sample Analysis with ICAP Spectroscopy," Jarrell-Ash Plasma Newsletter, Vol. 1, No. 2, pp. 3-4 (April 1978). Presentation of accuracy data for Cu, Zn, and other major and trace elements in NBS biological samples such as orchard leaves, tomato leaves, and alfalfa.

15. Brewer, P. G., Spencer, D. W., and Robertson, D. E., "Trace Element Profiles from the Geosecs-II Test Station in the Sargasso Sea," Earth and Planet. Sci. Lett., 16, pp. 111-116, (1972). Trace element data on ocean water profiles. Zn determined by solvent extraction AA and INAA at different laboratories.

16. Brown, G. C., Hughes, D. J., and Eason, J., "New XRF Data Retrieval Techniques and Their Application to USGS Standard Rocks," Chem. Geol., 11, pp. 223-229, (1973). XRF determination of major and trace elements in USGS standard rocks utilizing pressed pellets made from homogenized rock powder. Accuracy data presented for the major and trace elements.

17. Butler, C. C., Kniseley, R. N., and Fassel, V. A., "Inductively Coupled Plasma - Optical Emission Spectrometry: Application to the Determination of Alloying and Impurity Elements in Low and High Alloy Steels," Anal. Chem., Vol. 47, No. 6, pp. 825-829 (May 1975). Determination of 12 metals including Cr, Cu, Ni and Pb in steel using HCl/HNO_3 digestion. Gives detection limits based on 2x standard deviation of background for water and 0.5% Fe solution, and reported no significant deterioration due to the Fe matrix. All values determined for NBS steels were accurate despite Fe matrices ranging from <1% to >99%.

18. Carr, C. D. and Borst, J. E., "Applications of an Inductively Coupled Plasma Spectrometer to the Analysis of Difficult Samples," Applied Research Laboratories Publication, pp. 1-7. Discussion of nebulization difficulties when analyzing samples with high salt concentrations or unusual physical properties. Suggests matrix matching or internal standardization. Precision and accuracy data presented for spiked brines and phosphoric acid.

19. Charalambous, G. and Bruckner, K. J., "Technical Application Note No. 1, Analysis of Metallic Ions and Brewing Materials, Wort, Beer, and Wine by Inductively-Coupled Argon Plasma Spectroscopy," Jarrell-Ash Plasma Newsletter, Vol. 1, No. 4, pp. 4-9 (October 1978). Multielemental determination of metallic ions in brewing materials, wort and beer. Precision data generated for Pb, Sb, Zn, and other metals. Listed detection limits are based on optimized single-element conditions.

20. Chattopadhyay, A. and Katz, S. A., "Determination of 22 Elements in Geological Samples by Instrumental Neutron Activation Analysis," Radioanal. Chem., 46, pp. 321-331, (1978). INAA determination of up to 22 elements in geological samples. Detection limit data for Cr and Ba and other metals. Precision within 15% and accuracy for USGS Standards within 10%.

21. Clayton, C. G. and Packer, T. W., "Some Applications of Energy Dispersive X-Ray Fluorescence Analysis in Minerals Exploration, Mining, and Process Control, Advances in X-Ray Analysis, Vol. 21, pp. 1-13, (1978). Discussion of the radiation sources and detectors available for EDXRF, methods of excitation energy optimization and multielemental analysis applications to stream sediments and soils. For multielemental analysis, detection limits are a function of the excitation energy. Limits are lowered as the excitation energy approaches the analyte's absorption edge.

22. Chow, T. J., Earl, J. L., Reed, J. H., et al., "Barium Content of Marine Sediments Near Drilling Sites: A Potential Pollutant Indicator," Mar. Poll. Bull., 9, pp. 97-99, (9178). Concentration levels of Ba in California Bight sediments determined by IDMS and INAA analysis of sample splits. Correlation between methodologies was 0.923.

23. Church, S. E., "The Importance of the Measurement and Application of Interelement Corrections to the Analysis of Rocks," Applied Research Laboratories Publication, pp. 1-24 (September 10, 1976). Evaluation of interelemental corrections for multielemental analysis of USGS standard rocks. Author states that correction factors are linear up to 1000 ppm of the interferent and presents a table of empirical spectral interference values. Accuracy data presented for Be, Ba, Cr, Ni, Cu, Zn and other metals in standard rocks utilizing these empirical correction factors.

24. Cooper, J. A., Wheeler, B. D., Wolfe, G. J., Bartell, D. M., and Schlafke, D. B., "Determination of Sulfur, Ash, and Trace Element Content of Coal, Coke, and Fly Ash Using Multielement Tube-Excited X-Ray Fluorescence Analysis," Advances in X-Ray Analysis, Vol. 20, pp. 431-436, (1977). Multielemental determinations of major and trace element concentrations in pressed pellet samples of coal, coke and fly ash. Matrix absorption corrections were made using interaction coefficients and analyses of n+2 standards where n is the number of interfering elements.

25. Currie, L. A., "Limits for Qualitative Detection and Quantitative Determination, Application to Radiochemistry," Anal. Chem. Vol. 40, pp. 586-593 (1968). Statistical definition of detection limits for normal and Poisson distributions. ICP follows a normal distribution resulting in a definition of 3.3 x the standard deviation of the responses for the blank. This represents a qualitative limit only. Techniques based on counting, such as XRF and INAA, follow a Poisson distribution (unless the number of counts is large enough to approximate a normal distribution). The detection limit definition based on a Poisson distribution is slightly different from the normal-distribution definition.

26. Davidson, J. W. and Pummell, R. B., "Technical Application Note No. 1, Multielemment Analysis of Marine and Freshwater Sediments by Inductively Coupled Argon Plasma Spectrometry," Jarrell-Ash Plasma Newsletter, Vol. 3, No. 2, pp. 4-5 (April 1980). Determination of Ba, Cd, Cr, Cu, Ni, Pb, Zn and other trace and major elements in certified soil utilizing a HCl/HNO_3 leaching procedure. Spectral interferences were corrected with inter-elemental correction factors generated empirically.

27. Dermelj, M., Ravnik, V., and Kosta, L., "A Fast Isolation and Determination of Cd in Some Fungi, other Biological Materials, Soil, and Zn Metal by NAA," Radiochem. Radioanal. Letters, 24 (2), pp. 91-102, (1976). Analysis of biological standard reference materials, soil, and Zn metal using NAA.

28. Ediger, R. D., and Fernandez, F. J., "Optimization of ICP Background Correction Parameters," Atomic Spectroscopy, Vol. 1, No. 1, pp. 1-7 (January-February 1980). Discussion of spectral interferences due to line coincidence, line wing overlap, spectral continuum and spectrometer stray light. Suggested solutions are selection of an alternate line or use of a background correction system. Precision and accuracy data are given for As in Fuel and Oil Shale process water based on an ASTM round-robin study.

29. Ediger, R. D. and Wilson, D. L., "The Performance of an Inductively Coupled Plasma on the Model 5000 Atomic Absorption Spectrophotometer," Atomic Absorption Newsletter, Vol. 18, No. 2, pp. 41-45 (March-April 1979). The Perkin-Elmer 5000 ICP is compared to conventional flame and furnace AA in terms of precision, interferences, sample throughput and cost. Comparative detection limits given for Ba, Cd and other metals. Discussion of specific ICP interferences and background correction procedures.

30. Ellis, K. M. and Chattopadhyay, A., "Multielement Determination in Estuarine Suspended Particle Matter by Instrumental Neutron Activation Analysis," Anal. Chem., 51 (7), pp. 942-947, (1979). Determination of up to 28 elements in estuarine suspended particulate matter. Average precision varies between 10-16% and the accuracy is within 10% of certified values. Detection limits ranged from 0.37 ng-1.0 μg. Reports spectral interference of ^{24}Na on As.

31. Fabbi, B. F., "X-Ray Fluorescence Determination of Barium and Strontium in Geologic Samples," Applied Spectroscopy, Vol, 25, No. 3, pp. 316-318, (1971). Determination of Ba and Sr in standard reference rocks and minerals. Ti interferes with the Ba Ll line and a linear correction factor is applied. Sr analysis must be corrected for Fe absorption. Detection limits are given at the 95% confidence level along with accuracy data for the reference rock and mineral analyses.

32. Fassel, V. A., "Quantitative Elemental Analyses by Plasma Emission Spectroscopy," Science, Vol. 202, pp. 183-191 (October 13, 1978). Description of the mechanics of ICP-plasma formation, sample preparation and sample injection. Discussion of ICP's linear dynamic range and relative freedom from matrix interferences. Detection limits (3 times the background) given for all priority pollutant metals except Ag. Comparison of ICP with other multielemental methods.

33. Fassel, V. A., "Current and Potential Applications of Inductively Coupled Plasma (ICP) - Atomic Emission Spectroscopy (AES) in the Exploration, Mining, and Processing of Materials. Pure and Appl. Chem., Vol. 49, pp. 1533-1545 (1977). Review article on ICP containing description of plasmas, sample prep techniques and discussion of interelement interferences. References recent publications on analytical applications of ICP.

34. Fassel, V. A., "Inductively Coupled Plasma - Atomic Emission Spectroscopy: An Alternative Approach to "Flameless" Atomic Absorption Spectroscopy," in Flameless Atomic Absorption Analysis: An Update. American Society for Testing and Materials Special Technical Publication 618, 1975, pp. 22-42 (1977). Description of plasma generation and properties. Nebulizer modifications which enable analysis of microliter samples. Comparison of detection limits achieved with ICP and non-flame techniques for As, Be, Cd, Cr, Cu, Ni, Pb, Zn plus other metals.

35. Fassel, V. A. (Chairman), "IUPAC Commission on Spectrochemical and Other Optical Procedures for Analysis. Nomenclature, Symbols, Units, and Their Usage in Spectrochemical Analysis - II. Data Interpretation," Anal. Chem., Vol. 48, No. 14, pp. 2294-2296 (1976). IUPAC definitions given for statistical nomenclature applied to spectrochemical analyses. Detection limit at a 90% confidence interval is defined as 3 x the standard deviation of the background.

36. Fassel, V. A. and Kniseley, R. N., "Inductively Coupled Plasma - Optical Emission Spectroscopy," Anal. Chem., Vol. 46, No. 13, pp. 1110A-1120A and 1155A-1164A (November 1974). Compilation of detection limits observed for ICP and flame AAS for all priority pollutant metals plus others. Variations in detection limit definitions are noted. Discussion of interelement effects and the formation and stabilization of plasmas.

37. Feather, C. E., and Willis, J. P., "A Simple Method for Background and Matrix Correction of Spectral Peaks in Trace Element Determination by X-Ray Fluorescence Spectrometry," X-Ray Spectrometry, Vol. 5, pp. 41-48, (1976). Presentation of methodology for rapid and accurate background correction. Since any chosen background is inversely related to the mass absorption coefficient, background beneath several spectral peaks can be determined by measurement of only one interference-free background. Rb, Sr, Th, Ga and Pb in reference rocks are determined using different background correction methods.

38. Feely, R. A. and Massoth, G. J., "Major and Trace Element Composition of Suspended Matter in the North-East Gulf of Alaska: Relationships with Major Sources," Marine Chemistry, Vol. 10, pp. 431-453, (1981). A study of the variations in chemical composition and distribution of suspended particulate matter in the northeast Gulf of Alaska. Precision and accuracy data reported for Cr, Ni, Cu, Zn and major elements in standard reference rock determined by XRF.

39. Florkowski, T., Kuc, T., and Piorek, S., "Determination of Trace Elements in Plants by X-Ray Fluorescence Analysis for Environmental Pollution Investigations," In. Jour. of Applied Radiation and Isotopes, Vol. 28, pp. 679-686, (1977). Plant material (prepared either as dried and pressed pellets or ashed and deposited on filters) were analyzed by XRF for pollutants. Analysis of NBS Orchard Leaves (performed as a check on the calibration procedure) provided precision and accuracy data for Cu, Zn, As, Pb and other metals.

40. Floyd, M. A., Fassel, V. A., and D'Silva, A. P., "Environmental Samples by Inductively Coupled Plasma - Atomic Emission Spectrometry," Anal. Chem., Vol. 52, No. 13, pp. 2168-2173 (November 1980). Determination of several of the EPA-regulated metals in geochemical and environmental matrices utilizing a NaOH/HCl fusion-dissolution preparation and a scanning-monochromator instrument.

41. Franzini, M., Leoni, L., and Saitta, M., "Determination of the X-Ray Mass Absorption Coefficient by Measurement of the Intensity of AgK Compton Scattered Radiation," X-Ray Spectrometry, Vol. 5 pp. 84-87, (1976). Determination of the relationship between the intensity of AgK Compton scattered radiation and the mass absorption coefficient of rock and mineral samples.

42. Franzini, M., Leoni, L., and Saitta, M., "A Simple Method to Evaluate the Matrix Effects in X-Ray Fluorescence Analysis," X-Ray Spectrometry, Vol. 1, pp. 151-154, (1972). Determination of trace metals in USGS reference silicate rocks. Matrix absorption corrections were made by calculating absorption coefficients of major elements from artificial standards and then applying these coefficients to the rock samples once the major element composition had been determined.

43. Gallorini, M. and Orvini, E., "Determination of Zinc in Environmental Matrices: A Comparison of Results Obtained by Independent Methods," NBS Special Publication 422, Accuracy in Trace Analysis: Sampling, Sample Handling, and Analysis. Preceedings of the 7th IMR Symposium, Gaithersburg, MD, October 7-11 (1974). Evaluation of INAA, XRF and AAS for the determination of Zn in NBS Coal Fly Ash and an environmental sample of Urban Particulates. Precision and accuracy data generated for each method of analysis. Low AAS values are possibly due to analyte loss during dissolution.

44. Gallorini, M. and Orvini, E., "Determination of Zinc in Environmental Matrices: A Comparison of Results Obtained by Independent Methods," National Bureau of Standards Special Publication 422, Accuracy in Trace Analysis: Sampling, Sample Handling, and Analysis, Proceedings of the 7th 1 MR Symposium, Held October 7-11, 1974, Gaithersburg, MD, pp. 239-245, (1976).

45. Giauque, R. D., Garrett, R. B., and Goda, L. Y., "Energy Dispersive X-Ray Fluorescence Spectrometry for Determination of Twenty-Six Trace and Two Major Elements in Geochemical Specimens," Anal. Chem., Vol. 49, pp. 62-67 (1977). Pressed pellets of geochemical reference materials were analyzed using Compton scattered excitation radiation as an internal standard and as a measure of spectral background intensity. Precision and accuracy data presented for most of the priority pollutants plus other elements by XRF and INAA.

46. Giauque, R. D., Garrett, R. B., and Goda, L. Y., "Determination of Forty Elements in Geochemical Samples and Coal Fly Ash by X-Ray Fluorescence Spectrometry," Anal. Chem., Vol. 49, pp. 1012-1017, (1977). Presentation of precision and accuracy data for 40 elements in geochemical samples and coal fly ash. Matrix absorption effects are minimized by mixing sulfur powder with the pulverized sample prior to formation of pressed disks.

47. Giauque, R. D., Garrett, R. B., and Goda, L. Y., "Calibration of Energy Dispersive X-Ray Spectrometers for Analysis of Thin Environmental Samples," in X-Ray Fluorescence Analysis of Environmental Samples, Thomas G. Dzubay, Ed., Ann Arbor Science Publishers, Michigan, 1977, pp. 153-164. Description of several calibration techniques available to standardize for analyses of thin environmental samples.

48. Glaser, J. A., Foerst, D. L., McKee, G. D., Quave, S. A., Budde, W. L., "Trace Analyses for Wastewaters," E.S.&T., Vol. 15, No. 12, pp. 1426-1435 (1981). Discusses definition of detection limit based on hypothesis testing and selection of a specific confidence level. Also provides analytical procedure for evaluating detection limits independent of instrumentation or methodology.

49. Gluskoter, H. J., Ruch, R. R., Miller, W. G., et al., "Trace Elements in Coal: Occurrence and Distribution," Ill. State Geol. Survey Circular 499, pp. 1-154, (1977). Analysis of coal by INAA, AA, XRF and other techniques. Average RSD for any technique in range of 10-20% for most elements. Matrix interferences for some elements using XRF. INAA resolution problems for Zn and high bias for Cr. XRF gave high bias for Cu and Ni.

50. Gordon, G. E., Randle, K., Goles, G. G., et al., "Instrumental Activation Analysis of Standard Rocks with High-Resolution Gamma-Ray Detectors," Geochim. et Cosmochim. Acta., 32, ppl 369-396, (1968). Investigation of INAA capabilities for igneous rock with Ge(Li) detectors. List of major interferents and precision and accuracy for Ba, Cr, Sb and others. Detection limits for short-lived nuclides dependent on Mn and Na content. Limits for longer-lived nuclides dependent on Co, Fe and Sc contents. Suggests use of large and small Ge(Li) detectors or NaI(Tl)-Ge(Li) coincidence counting to improve detection limits.

51. Horner, B., "Inductively Coupled Plasma (ICP) in a Precious Metal Laboratory" in Proc. Int. Precious Metal Institute Conf., pp. 125-130 (1981). Evaluation of ICP as a means to increase productivity but maintain comparability with AAS-generated data in a precious metals lab. Reproducibility data given for Cu aqueous solution. Detection limits determined for Ag, As, Ba, Be, Cd, Cr, Cu, Hg, Ni, Sb and Zn. Inter-element interference correction given for Ti effect on Ag.

52. Hutton, J. T. and Elliott, S. M., "An Accurate XRF Method for the Analysis of Geochemical Exploration Samples for Major and Trace Elements Using One Glass Disc," Chem. Geol., Vol. 29, pp. 1-11, (1980). Major and trace element analysis of geochemical samples using lithium borate fusion and one glass disc. Detection limits based on 2 x background are given for Cu, Zn, Ba, Pb and other elements. Precision and accuracy data are generated and compared with the results obtained by another worker using pressed pellets of ground rock with binder.

53. Irons, R. D., Schenk, E. A., and Giauque, R. D., "Energy Dispersive X-Ray Fluorescence Spectroscopy and Inductively Coupled Plasma Emission Spectrometry Evaluated for Multielement Analysis in Complex Biological Matrices," Clin. Chem., Vol. 22, pp. 2018-2024, (1976). Energy-dispersive XRF and ICP were evaluated as routine methods for multielemental analysis of biological matrices. Comparison was based on precision, accuracy, and detection limits obtained for 13 elements by each technique.

54. Irons, R. D., Schenk, E. A., and Giauque, R. D., "Energy-Dispersive X-Ray Fluorescence Spectroscopy and Inductively Coupled Plasma Emission Spectrometry Evaluated for Multielement Analysis in Complex Biological Matrices," Clinical Chemistry, Vol. 22, No. 12, pp. 2018-2024 (1976). Evaluation of energy dispersive XRF and ICP analysis of NBS Bovine Liver and Orchard Leaves for Zn, Pb, Ni, Cu, As, Se and other elements. For ICP a 1:1 $HNO_3/HClO_4$ digestion was used. Compilation of detection limits, precision and accuracy. For both techniques, precision found to be limited by operator error.

55. Jones, J. B., Jr., "Elemental Analyses of Biological Substances by Direct-Reading Emission Spectroscopy," Jarrell-Ash Plasma Newsletter, Vol. 1, No. 1, pp. 4-8 (January 1978). Precision and accuracy data for determination of Pb, Zn and other metals in NBS Orchard Leaves involving HNO_3 leaching of ashed material.

56. King, B. S., Espos, L. F., and Fabbi, B. P., "X-Ray Fluorescence for Minor and Trace-Element Analyses of Silicate Rocks in the Presence of Large Interelement Effects," Advances in X-Ray Analysis, Vol. 21, pp. 75-88, (1978). Precision, accuracy and detection limit data for 16 minor and trace elements in geological materials. A modified sample-preparation method was developed to extend pellet life. Multiple linear-regression equations were used to correct for matrix absorption and interferences.

57. Knechtel, R., Conn, K., annd Fraser, J., "The Analysis of Chemical Digester Sludges for Metals by Several Laboratory Groups, "Environmental Protection Service, Fisheries and Environmental, Canada Report No. EPA 4-WP-78-1, pp. 1-38 (January 1978). Interlaboratory comparison of four sewage treatment plant sludges using AAS with various sample preps, XRF, INAA and flame emission spectroscopy. Instrumental methods could not be statistically compared because of insufficient data. Individual data for Zn, Cu, Ni, Cd, Pb, Cr and Hg by INAA and/or XRF can be compared with mean of AAS determinations by the reader. Improvement of intralab precision over interlab precision indicative of systematic differences among techniques.

58. Kulmatov, R. A. and Kist, A. A., "Physical Methods of Investigation, Multielement Instrument Neutron - Activation Analysis of Water Bodies and Its Applications in Ecological Investigation," Industrial Laboratory, 44(12), pp. 1482-1485 (December 1978). Determination of toxic metals in water samples. Detection limits based on 3 x background. Precision based on 7-9 analyses of same sample was found to range from 10-25%. Instrumental throughput rate = 20-80 samples/day.

59. Larson, G. F., Fassel, V. A., Scott, R. H., and Kniseley, R. N., "Inductively Coupled Plasma - Optical Emission Analytical Spectrometry. A Study of Some Interelement Effects," Anal. Chem., Vol 47, No. 2, pp. 238-243 (February 1975). Study of interelement interferences occurring with ICP. Focuses on $CaPO_4$ and Ca-Al interference system as well as interference effects produced by easily-ionized elements.

60. Laul, J. C., "Neutron Activation Analysis of Geological Materials," Atomic Energy Review, 173, pp. 603-695, (1979). Defines factors affecting sensitivity (efficiency of detector, irradiation time and neutron flux). Gives relative detection limits for 60 elements. Discussion of detectors, precision, accuracy, interferences and sample prep. Presents accuracy data for USGS and IAEA soil samples.

61. Lechler, P. J. and Leininger, R. K., "Technical Applications Note No. 2, Analysis of Black Shale by ICAP Spectroscopy," Jarrell-Ash Plasma Newsletter, Vol. 2, No. 1, pp. 8-10 (January 1979). Presents accuracy data for some of the EPA-regulated metals in black shale samples based on comparison with data derived from other labs and AAS. Digestions are performed in unsealed Teflon bombs preventing analysis of volatiles (As and Se). Cd and Pb required interelement correction factors.

62. Leoni, L. and Saitta, M., "Matrix Effect Correlations by AgK Compton Scattered Radiation in the Analysis of Rock Samples for Trace Elements," X-Ray Spectrometry, Vol. 6, pp. 181-186, (1977). Presentation of accuracy data for Ba, Cr, Ni, Pb and other metals in standard reference rocks. Matrix absorption corrections were based on mass absorption coefficients determined by measuring the intensity of the AgK Compton scattered radiation.

63. Maenhaut, W. and DeReu, L., "Trace Element Analysis of Biological Materials: Complementarity of PIXE and NAA, "IEEE Trans. on Nuclear Science, NS-28(2), pp. 1386-1391, (1981). Precision data for Se and Zn analysis of human serum. Large Na and Cl concentrations obliterated all short-lived radionuclides. Precision data for Sb analysis of lung tumors and Ba and Cr analysis of human albumin.

64. Malyshev, V. I., Shiryaeva, Z. A., Sokolova, L. M., et al., "Application of Neutron Activation Analysis to determine the Contents and Isotopic Ratios of Elements in Rocks and Minerals," J. Radioanal. Chem., 57(2), pp. 287-297, (1980). Determination of 7-14 elements in rock and mineral matrices. Greatest interferences came from ^{46}Fe, ^{59}Fe, and ^{235}U fission fragments. Present precision and accuracy data for As and Sb.

65. Maney, J. P., Luciano, V., and Ward, A. F., "Technical Application Note No. 3, Analysis of Energy Resources by ICAP Spectroscopy, Part III: Uranium," Jarrell-Ash Plasma Newsletter, Vol. 2, No. 1, pp. 11-13 (January 1979). Tabulation of detection limits for Ni, Pb, Zn and other metals in water and in the presence of 1000 ppm U reveals significant deterioration in detection when U is present. A U extraction procedure is devised which lowers the detection limits.

66. McGinley, A. N. and Schweikert, E. A., "Neutron Activation Analysis of Flints from the Edwards Formation," J. Radioanal. Chem., 52, pp. 101-110, (1979). Determination of As in flint and standard rocks. As not detected in USGS rocks because the 14-hour irradiation created high matrix activity which masked the peak. Conclude that USGS reference rocks do not resemble flints closely enough to allow the irradiation and counting sequence chosen for the flint sample to be adequate for the USGS rock standards.

67. McKinney, G. L. and Schlicht, G. R.. "Technical Application Note No. 1, Analysis of Trace Metals in Fish Tissue by Inductively Coupled Argon Plasma Emission Spectrometry," Jarrell-Ash Plasma Newsletter, Vol. 3, No. 4, pp. 4-6 (October 1980). Data on spiked recoveries for As, Ba, Cd, Cr, Cu, Ni, Pb, Tl, Zn and other metals in fish tissue digested with nitric acid. All recoveries were >90% with the exception of Tl (63%). Se was apparently lost during digestion.

68. McKnown, D. M. and Morris, J. S., "Selenium Analysis Methodology and Applications," 11th Conf. on Trace Substances in Environmental Health, Columbia, MO, June 7-9, 1977, pp. 338-344. Discussion of INAA as a single element technique for analysis of low level Se in biological samples. Use of ^{77m}Se product instead of the more commonly used ^{77}Se avoids the need for employing radiochemical separation prior to analysis. Precision and accuracy data given for biological matrices.

69. McLaren, J. W., Berman, S. S., Boyko, V. J., and Russell, D. S., "Simultaneous Determination of Major, Minor, and Trace Elements in Marine Sediments by Inducively Coupled Plasma Atomic Emission Spectrometry," Anal. Chem., 53, pp. 1802-1806 (1981). Presentation of precision and accuracy data for trace metals in marine sediment reference materials digested with $HNO_3/HClO_4/HF$ in teflon bombs. Cr results were low due to incomplete dissolution. Cd concentrations occuring in the sediments were below the detection limit. Other metal results were good indicating that the use of a simple one or two-point background correction and use of linear correction factors for spectral interferences were adequate.

70. McQuaker, N. R., Brown, D. F., and Kluckner, P. D., "Digestion of Environmental Materials for Analysis by Inductively Coupled Plasma - Atomic Emission Spectrometry," Anal. Chem., Vol. 51, No. 7, pp. 1082-1084 (June 1979). Variation in sample salt content or residual digestion acid can cause substantial analytical errors with ICP. This article investigates digestion procedures which are appropriate for ICP in terms of minimizing this error and also achieving adequate extraction efficiencies. Precision and accuracy data are presented for NBS Orchard Leaves, NBS Bovine Liver, and reference soil material using an HNO_3 pre-digestion with subsequent HF and $HClO_4$ digestion which provides for a residual acid content of 3.5 ± 0.4% $HClO_4$.

71. McQuaker, N. R., Kluckner, P. D., and Chang, G. N., "Calibration of an Inductively Coupled Plasma - Atomic Emission Spectrometer for the Analysis of Environmental Materials," Anal. Chem., Vol. 51, No. 7, pp. 888-895 (June 1979). Devise a suitable calibration scheme for ICP variable acid concentration effects, interelement interference corrections, instrumental drift, selection of an adequate calibration curve and preparation of suitable multielemental standards. Calibration performance was evaluated based on precision and accuracy obtained from analysis of reference material.

72. Motooka, J. M., Mosier, E. L., Sutley, S. J., and Viets, J. G., "Induction-Coupled Plasma Determination of Ag, Au, Bi, Cd, Cu, Pb and Zn in Geologic Materials Using the Selective Extraction Technique - Preliminary Investigation," Applied Spectroscopy, Vol. 33, No. 5, pp. 456-460 (1979). Use of an organic extraction technique to minimize major element interferences in analysis of geologic materials for Ag, Au, Bi, Cd, Cu, Pb and Zn. Use of this organic solvent raises detection limits for Cd, Pb, and Zn relative to an aqueous solvent. Precision and accuracy relative to AAS were determined for 6 samples. Results were obtained without any attempt to correct for background for spectral interferences yielding accuracies within 15% of the true value.

73. Mudra, K. and Simkova, M., "Instrumental Neutron Activation Analysis of Fluorite by Means of Short Activation," Radiochem. Radioanal. Letters, 39(3), pp. 181-188 (1979). Determination of major and minor components of fluorite by means of short activation. This material is expected to become a geological standard after sufficient analysis. The only EPA-regulated metal present was Ba. Presentation of precision data and detection limits based on the definition of Currie.[25]

74. Nielson, K. K., "Matrix Corrections for Energy Dispersive X-Ray Fluorescence Analysis of Environmental Samples with Coherent/Incoherent Scattered X-Rays," Anal. Chem., Vol. 49, pp. 641-648, (1977). Presentation of a numerical method for calculating matrix absorption in thick pelletized samples which accounts for light-element as well as heavy-element absorption. Precision and accuracy data for As, Cu, Ni, Pb, Zn and other elements in NBS Orchard Leaves and Bovine Liver are derived using this matrix absorption correction method.

75. Norish, K. and Chappell, B. W., "X-Ray Fluorescence Spectrography in Physical Methods in Determination Minerology, Ed. J. Zussman, Academic Press, London (1967), pp. 161-214. A chapter covering x-ray production, XRF equipment components, qualitative analysis, theory and methods of quantitative analysis, statistics of x-ray measurement and a discussion of sample preparation.

76. Norrish, K. and Hutton, J. T., "An Accurate X-Ray Spectrographic Method for the Analysis of a Wide Range of Geological Samples," Geochim. et Cosmochim. Acta, Vol. 33, pp. 431-453, (1969). Determination of major elements in geological samples prepared by fusion with lithium borate containing lanthanum oxide. Precision and accuracy data for standard rocks indicate the major source of error is due to counting errors.

77. Odegard, M., "The Use of Inductively Coupled Argon Plasma (ICAP) Atomic Emission Spectroscopy in the Analysis of Stream Sediments," Journal of Geochemial Exploration, 14, pp. 119-130 (1981). Analysis of nitric acid extracts of stream sediment samples for major and minor elements. Use of Li or Y as internal standards considerably reduced relative standard deviations. Detection limits are based on 2 x standard deviation of the blank. Accuracy and precision data presented for synthetic test solutions and accuracy data given for stream sediment samples.

78. Ohls, K. and Sommar, D., "Analytical Applications of an Air/Argon ICP Source in Emission Spectroscopy," ICP Information Newsletter, Vol. 4, No. 12, pp. 532-536 (May 1979). Studied substitution of air for the nitrogen coolant gas of a nitrogen/argon ICP discharge. Detection limits lowered for Be, Cu, Ni, Zn and several major elements but increased for B, Ca, Mn and Pb.

79. Olson, K. W., Hass, W. J., Jr., and Fassel, V. A., "Multielement Detection Limits and Sample Nebulization Efficiencies of an Improved Ultrasonic Nebulizer and a Conventional Pneumatic Nebulizer in Inductively Coupled Plasma - Atomic Emission Spectrometry," Anal. Chem. Vol. 49, No. 4, pp. 632-637 (April 1977). Comparison of detection limits obtained with an improved ultrasonic nebulizer and a pneumatic nebulizer for 14 elements present in an acidic aqueous matrix. Ultrasonic nebulization with desolvation gave detection limits superior by an order of magnitude to those obtained with pneumatic nebulization. The ultrasonic nebulization performance remained superior even in the presence of NaCl.

80. Pella, P. A., Lorber, K. E., and Heinrich, K. F. J., "Energy-Dispersive X-Ray Spectrometric Analysis of Environmental Samples after Boarate Fusion," Anal. Chem., Vol. 50, pp. 1268-1271, (1978). Application of an automated borate fusion procedure to NBS Fly Ash and NBS Particulate Matter. The Fly Ash was fused with heavy absorbers, and the analysis was conducted assuming no matrix effects. The Particulate Matter was fused without heavy absorbers and the data were corrected for absorption and interferences by an iteration method. Detection limits and precision and accuracy presented for Cr, Cu, Ni, Pb, Zn and other metals.

81. Pongar, R. W. and Tompson, G. R., "Inductively-Coupled Argon Plasma Emission and Atomic Absorption Spectroscopy: A Comparison Study of Process Water Sample Analysis," Jarrell-Ash Plasma Newsletter, Vol. 1, No. 22, pp. 5-8 (April 1978). AAS and ICP performance were compared based on major-element analysis of process water samples. Included in the paper is a table indicating detection limits and maximum analyzable concentration for trace and major elements by ICP and AAS. A table of ICP interelement correction factors is also presented.

82. Perlman, K. and Asaro, F., "Pottery Analysis by Neutron Activation," Archaeometry, 11, pp. 21-52, (1969). Analysis of archeological pottery using a spiked, pre-analyzed pottery standard to maximize precision and accuracy. Enumeration of sources of error and definition of interfering peaks and background for several EPA regulated metals in this matrix. Precision data and comparison of INAA results with other techniques.

83. Reynolds, R. C., "Matrix Corrections in Trace Element Analysis by X-Ray Fluorescence: Estimation of the Mass Absorption Coefficient by Compton Scattering," American Mineralogist, Vol. 48, pp. 1133-1143, (1963). Determination of precise mass absorption coefficients from the Compton scattered portion of a Mo $K\alpha$ primary beam. Applying this procedure, a single standard material can serve as a reference standard for samples with a similar matrix.

84. Robinson, A. L., "Elemental Analysis: Plasmas Revive Emission Spectroscopy," Science, Vol. 199, pp. 1324-1326 (March 24, 1978). Review of current state-of-the-art instrumentation with emphasis on cost benefits of ICP and particular applications capabilities.

85. Rutledge, B. E. and McClurg, J. E., "Technical Aid Note No. 1, Plant Tissue Analysis by Inductively Coupled Argon Plasma Spectrometry," Jarrell-Ash Plasma Newsletter, Vol. 3, No. 3, pp. 4-5 (July 1980). Presentation of precision and accuracy data for Cu, Zn plus major elements present in NBS orchard leaves digested with HCl and HNO_3.

86. Schachter, M. M. and Boyer, K. W., "Digestion of Organic Matrices with a Single Acid for Trace Element Determination," Anal. Chem., Vol. 52, No. 2, pp. 360-364 (1980). Review of currently available wet and dry ashing techniques for destruction of organic matrices prior to trace element analyses. Authors recommend a nitric acid wet digestion using a specified digestion apparatus. The method was tested by discerning recoveries and precision obtained for 6 biological NBS reference materials. Low recoveries were obtained for Cr in Orchard Leaves and Spinach and high recoveries were obtained for Pb in Bovine Liver and Spinach. The presence of chloride or high concentrations of Ca, Mg, and P did not seriously affect recoveries.

87. Scheer, J., Voet, L., Watjen, U., et al., "Comparison of Sensitivities in Trace Element Analysis Obtained by X-Ray Excited X-Ray Fluorescence and Proton Induced X-Ray Emission," Nuclear Instruments and Methods, Vol. 142, pp. 333-338, (1977). Comparison of trace element detection limits by XRF and PIXE. Sensitivity of the XRF system is much more matrix independent than the PIXE.

88. Schleicher, R. G., Leighty, D. A., Kahn, H. L. and Sotera, J. J., "The Analysis of Difficult Samples by Plasma Spectroscopy," Instrumentation Laboratory, Inc. Report Number 20 (July 1980). Presentation of detection limits and instrumental precision. Discussion of methods development for instrument parameter settings. Precision and accuracy data for determination of Ba in an NBS seawater standard were good due to lack of spectral interferences and very little background emission. Determination of Al in wood pulp and trace metals in fuel oils also presented.

89. Schroeder, B., Thompson, G., Sulanowska, M., "Analysis of Geologic Materials Using an Automated X-Ray Fluorescence System," X-Ray Spectrometry, Vol. 9, pp. 198-205, (1980). Analysis of geologic materials using an automated XRF system. Major elements are determined by fusion while trace elements are determined directly on the rock powder. Correction for matrix absorption is done off-line utilizing previously determined major element concentrations and published interelement correction factors. Precision and accuracy data are reported for standard rocks.

90. Scott, R. H. and Kokot, M. L., "Application of Inductively Coupled Plasmas to the Analysis of Geochemical Samples," Anal. Chim. Acta., 75 pp. 257-270 (1975). Analysis of geochemical soil samples by ICP and AAS using an $HNO_3/HClO_4$ digestion for Co, Cu, Ni, Pb and Zn. Report detection limits based on 3 x background, precision as a function of concentration level, and a regression plot of ICP versus AAS values.

91. Spencer, D. W., Brewer, P. G., and Sachs, P.L., "Aspects of the Distribution and Trace Element Composition of Suspended Matter in the Black Sea," Geochim. et Cosmochim. Acta., 36, pp. 71-86, (1972). Analyses of suspended matter from the Black Sea for Cr, Hg, Zn, and other metals but no precision or accuracy data is presented. Detection limits reported as 3 x background for blank Millipore filters.

92. Stross, F. H., Sheets, P. Asaro, F., and Michel, H. V., "Precise Characterization of Guatemalan Obsidian Sources, and Source Determination of Artifacts from Quirigua," Submitted to American Antiquity, (November 1981). Discussion of requirements for accurate lab intercalibration. Labs must use the same standard or well known standards and background and interference corrections must be uniformly made. Interferences are listed for Ag, As, Ba, Cu, Cr, Ni, Zn and others. Precision data for Ba and other metals in obsidian samples. Accuracy defined as the square root of the sum of the squares of the precision and the accuracy of that element in standard pottery.

93. Thomas, I. L. and Haukka, M. T., "XRF Determination of Trace and Major Elements Using a Single-Fused Disc," Chem. Geol., Vol. 21, pp. 39-50, (1978). Development of a fusion preparation procedure suitable for major and trace element analysis in a wide range of geological materials.

94. Thompson, M. Imperial College of Science and Technology, London, England, Personal Communication (July 1981). Detection limit data for over 30 metals. Thorough discussion of the digestion procedures available for analysis of geochemical samples and recommendations of suitable digestions for specific geochemical samples.

95. Thompson, M. and Howarth, R. J., "A New Approach to the Estimation of Analytical Precision," Journal of Geochemical Exploration, 9, pp. 23-30 (1978). Discussion of estimation of analytical precision without assuming that precision remains independent of concentration level.

96. Ting, B. T. G. and Monahan, S. E., "Effects of Organic and Inorganic Binding on the Volatilization of Trace Elements during Coal Pyrolysis," ES&T, 13, pp. 1537-1540, (1979). Precision data presented for analysis of As, Cr, and Se in coal. The remainder of the paper is a study of element volatility of coal subject to pyrolysis.

97. Turekian, K. K., Katz, A., and Chan, L., "Trace Element Trapping in Pteropod Tests," L&O, 18, pp. 240-9 (1973). Analysis of pteropod and planktonic samples for trace elements. Detection limits based on 2 background presented for Cr, Sb, Se and other elements. Cr precision is due to counting statistics only.

98. Tyler, L. C., "Technical Aid Note No. 2, Analysis of Sewage Sludge by Inductively Coupled Argon Plasma Spectrometry," Jarrell-Ash Plasma Newsletter, Vol. 3, No. 3, pp. 6-8 (July 1980). Precision data for six of the priority pollutants plus other metals in sludge filter cakes. Sample preparation consisted of dry ashing and ether extractions to remove Fe. The Fe extraction was necessary because at the 5% level the Fe overloaded the detector and use of an interelement correction factor was no longer valid.

99. Uchide, H., Uchida, T. and Chuzo, I., "Determination of Minor and Trace Elements in Silicate Rockes by Inductively-Coupled Plasma Emission Spectrometry," Anal. Chim. Acta., 116, pp. 433-437 (1980). Presentation of precision and accuracy data for ICP analysis of major and trace metals in silicate rocks. The digestion procedure consisted of HF aqua regia in a teflon bomb followed by evaporation to dryness. Detection limits were based on 2 x the standard deviation for the blank.

100. Varnes, A. W. and Andrews, T. E., "Comparison of Wear Metal Analysis of Used Motor Oil by ICAP Spectroscopy and Rotating Disk Excitation," Jarrell-Ash Plasma Newsletter, Vol. 1, No. 1 pp. 12-14 (January 1978). Comparison of wear metal concentrations in used motor oils analyzed by ICP and rotating disk electrode. ICP results were in good agreement with rotating disk electrode except for Al, Na, Si, Pb, Ni and Sn. ICP detection limits for wear metals in oil were calculated.

101. Ward, A. F., "Inductively Coupled Argon Plasma Spectroscopy. Development, Technique, and Applications," American Laboratory (November 1978). History, performance characteristics, and instrumentation configuration of ICP is discussed. Aqueous detection limits are presented relative to other techniques. Accuracy data presented for liver, rock, steel, and fuel oil reference materials and samples.

102. Ward, A. F., "Technical Aid Note No. 1, Instrument Performance/Diagnosis Tests. Part I: ICAP Atom Comp Background Correction System." Jarrell-Ash Plasma Newsletter, Vol. 1, No. 4, pp. 14-17 (October 1978). Presentation of aqueous detection limit data and the effect of Na, K, Mg, Ca, S, N and C (at the 10,000-ppm level) on the apparent trace element concentrations.

103. Ward, A. F. and Marciello, L., "Technical Application Note No. 2, Analysis of Energy Resouces by ICAP Spectroscopy, Part II: Petroleum Products," Jarrell-Ash Plasma Newsletter, Vol. 1, No. 4, pp. 10-13 (October 1978). Precision, accuracy and detection limit data are presented for trace elements in wear oils. ICP values were compared with AAS and XRF for lubricating oils and crude oil. Precision and accuracy data were also obtained from analysis of NBS reference fuels.

104. Ward, A. F. and Marciello, L., "Technical Application Note No. 2, Analysis of Energy Resources by ICAP Spectroscopy, Part I: Coal Fly Ash and Coal," Jarrell-Ash Plasma Newsletter, Vol. 1, No. 3, pp. 10-13 (July 1978). Comparison of three different digestion procedures for the analysis of coal and coal fly ash. Precision and accuracy data generated for 20 metals in NBS Coal and Coal Fly Ash indicate that use of a Teflon pressure bomb and HF gives results which are superior to the results obtained by bicarbonate fusion or the Teflon-bomb procedure utilizing $HClO_4$.

105. Yellin, J., Perlman, I., Asaro, F., Michel, H. V., and Mosier, D. F., "Neutron Activation Analysis of Complex Mixtures - An Interlaboratory Study," Unpublished. Test intrinsic reliability of INAA in complex matrices by performing an interlaboratory study. Agreement was good over a wide range of composition.

106. Yellin, J., Perlman, J., Asaro, F., Michel, H. V., and Mosier, D. F., "Comparison of Neutron Activation Analysis from the Lawrence Berkeley Laboratory and the Hebrew University," Archaeometry, 20, 1, pp. 95-100, (1978). Analysis of a series of samples in two laboratories which have different equipment and modes of operation in order to test for comparability and sources of error. Enumeration of the various potential error sources. Results provided precision data for Ba, Cr, Ni and other elements.

107. Zamechek, W., "Trace Metals Analysis in Si and Al Metals by ICAP Spectroscopy," Jarrell-Ash Plasma Newsletter, Vol. 1, No. 1, pp. 15-20 (January 1978). Determination of trace metals in Si and Al metals and their oxides. Detection limits are given in aqueous matrix and as a function of an increasing Al matrix. Percent recoveries are also given as a function of Al concentration. An increase in the Al matrix has the expected effect of decreasing recoveries and increasing detection limits. ICP analytical results on real samples are compared to AAS data.

APPENDIX A

INSTRUMENT USER QUESTIONNAIRE

X-Ray Fluorescence - XRF
Instrumental Neutron Activation Analysis - INAA
Inductively Coupled Plasma - ICP

1. Date Instrument Acquired _____ Downtime Estimation _____

   Instrument Manufacturer _____ No. of Staff Members involved in this area of work _____

   Model No. _____

   Capital Cost $_____

   Expendables cost (supplies) $_____/month

   Labor Cost $_____/month

2. What type of sample prep is performed prior to the instrument analysis?

3. Interferences

   a. Indicate direct interferences encountered in the analysis of the priority pollutant metals (As, Ag, Ba, Be, Cd, Cr, Cu, Hg, Pb, Ni, Se, Sb, Tl, Zn) in environmental matrices. What is the magnitude of interferences (e.g., mg analyte/1000 ppm interferent)?

   b. What correction methods do you use for analyzing any of the above elements when present in a complex matrix containing interferences?

      1. Factor (mg Analyte/mg Interferent)? _____
      2. Alternate wavelengths or energies? _____
      3. Other? _____

      4. Comments

4. Statistical Section:

a. Detection limit for the following elements (µg/l or µg/g or µg) (circle one)

(ICP users please indicate wavelength)

Ag	_____	at	_____ nm	Hg	_____	at	_____ nm
As	_____	at	_____ nm	Ni	_____	at	_____ nm
Ba	_____	at	_____ nm	Pb	_____	at	_____ nm
Be	_____	at	_____ nm	Sb	_____	at	_____ nm
Cd	_____	at	_____ nm	Se	_____	at	_____ nm
Cr	_____	at	_____ nm	Tl	_____	at	_____ nm
Cu	_____	at	_____ nm	Zn	_____	at	_____ nm

b. What is your limit of quantitation?

3 x D.L. _____ 10 x D.L. _____ Other _____

How is the D.L. determined? (Please check the appropriate line)

_____ 2 x standard deviation of the background noise
_____ 3 x standard deviation of the background noise
_____ 3 x standard deviation of a low conc. standard
_____ 2 x standard deviation ordinate intercept calculated from regression of calibration standards
_____ 2 x standard deviation background $\frac{\text{(analyte conc)}}{\text{signal to background ratio}}$
_____ Other

c. Typical precision observed at

10 x D.L. is _____ and is based on _____ no. of replicates

100 x D.L. is _____ and is based on _____ no. of replicates

How does daily precision compare with long term precison (i.e., is instrument drift a problem?)

d. Are accuracy data obtained from analysis of standard reference materials or by comparison of different techniques? (List materials or techniques and elements analyzed)

5. What is your rate of sample throughput?

   Time limiting step occurs where?

6. Commercial Labs Only:

   Approximate Price Quote/Sample for analysis of these elements:

   a) In solids _____ b) In liquids _____

7. Comments

8. Do you wish any of this information to be confidential? (Please star confidential data) (i.e., only presented in statistical summaries)

9. Name of individual to contact for further information:

   Lab Name _____ Contact _____

APPENDIX B

LIST OF INDIVIDUALS RECEIVING THE INSTRUMENT USER QUESTIONNAIRE

Commercial Users:	Replied:
ICP	
Dr. Rau Gemini Industries 2311 So. Pullman St. Santa Ana, CA 92714	No
Ms. JoAnn Danielson Shasta Analytical Lab 1240 Redwood Blvd. Redding, CA 96003	No
Mr. Keith Seace Roy F. Weston Inc. Weston Way Westchester, PA 19380	No
Mr. Bob Stromatt Westinghouse Hanford Chemical and Analytical Dept. Richland, WA 99352	No
Ms. Carol Jones Environmental Services Dept. Dow Chemical Freeport, TX 77541	No
Mr. Bob Adams American Enka Research Street Enka, NC 28728	Yes
Ms. Holly Ham Data Lab Inc. 2900 Corvin Drive Santa Clara, CA 95051	No

Commercial Users:	Replied:
Mr. Dave Leighty Instrumentation Laboratory, Inc. Jonspin Road Wilmington, MA 01887	No
Dean Toye Acme Analytical Laboratories 852 East Hastings Street Vancouver, British Columbia, Canada	No
Gordon Utas Chemical and Geological Labs, Inc. 14203-129 Avenue Edmonton, Alberta, Canada	Yes
Gordon Van Sickle Skyline Labs 12090 West 50th Place Wheatridge, CO 80033	No useful information
Derrel Dixon Can-Test Limited 1650 Pandora Street Vancouver, British Columbia, Canada	No
Mr. John Burgener Technical Service Laboratory 516 Union Road P.O. Box 14642 Opportunity, WA 99214	No
Dr. Debnam Technical Service Lab 1301 Fewster Drive Mississauga, Ontario, Canada L4W 1A2	No
Atomic Energy of Canada Ltd. - Research Whiteshell Nuclear Research Establishment Pinawa, Manitoba, Canada ROE 1LO	No useful information
Radian Corp. 8500 Shoal Creek Blvd. Austin, TX 78753	No
Sverdrup/ARO, Inc. Environmental Laboratory P.O. Box 884 Tullahoma, TN 37388	No useful information

Commercial Users:	Replied:
Orlando Labs P.O. Box 19127 Orlando, FL 32814	No
Barringer Resources 1626 Cole Aveneue Golden, CO 80401	No
Dr. Rick Ronan Versar Inc. 6621 Electronic Drive Springfield, VA 22151	No

XRF

EG&G Ortec 100 Midland Road Oak Ridge, TN 37830	No
Kevex Corporation 1101 Chess Drive Foster City, CA 94404	No
New England Nuclear 549 Albany Street Boston, MA 02118	No
Nuclide Corporation 642 E. College Ave. State College, PA 16801	No
Philips Electronic Instruments 85 McKee Drive Mahwah, NJ 07430	No
Tracor Northern, Inc. 2551 W. Beltline Hwy. Middleton, WI 53562	No
Spectrochem 545 Commerce Street Franklin Lakes, NJ 07417	No
American Standards Testing Bureau, Inc. 40 Water Street New York, NY 1004	No

Commercial Users:	Replied:
Applied Research Laboratiories of Fla., Inc. P.O. Box 489 Hialeah, Fl. 33011	No
Coor Spectro-Chemical Lab Div. of Coors Porcelain Co. 17750 W. 32nd Ave. Golden, CO 80401	No
Gollob Analytical Service 47 Industrial Road Berkeley Heights, NJ 07922	No
National Spectrographic Laboratories, Inc. 7650 Hub Pkwy. Valley View, OH 44125	No
NUS Corp. 4 Research Place Rockville, MD 20850	No
Princeton Testing Laboratory, Inc. US Route 1 Princeton Service Center Box 3108 Princeton, NJ 08854	No useful information
United States Testing Co. 1415 Park Ave. Hoboken, NJ 07030	No
Hazleton 1500 Frontage Road Northbrock, IL 60062	No

INAA

Atomergic Chemetals Corp. 100 Fairchild Ave. Plainview, NY 11803	No
General Activation Analysis, Inc. 11575 Sorrento Valley Rd. Bldg. 214 San Diego, CA 92121	Yes

Commercial Users:	Replied:
Nuclide Corp. AGV Div. P.O. Box 315 Acton, MA 01720	No useful information
Mr. Robert Strack CintiChem, Inc. P.O. Box 816 Tuxedo, NY 10987	Yes

Non-Commercial Users:	Replied:
ICP	
Mr. R. C. Goldsmith Sante Fe Railroad 10001 No. East Atchinson St. Topeka, KA 66616	No
Mr. Sam Hopper Dept. of Natural Resources 2010 Missouri Blvd. Jefferson City, MO 65201	No
Mr. Andy Britol Agronomy Department New Mexico State University Las Cruces, New Mexico 88003	Yes
J. W. Jones U.S. Dept. of Health and Human Services Public Health Service Food and Drug Administration Bureau of Foods 200 C Street S.W. Washington, DC 20204	Yes
D. Taylor U.S. Dept. of Health and Human Services Public Health Service Center for Disease Control National Institute for Occupational Safety & Health Division of Respiratory Disease Studies 944 Chestnut Ridge Road Morgantown, WV 26505	No

Non-Commercial Users:	Replied:
P.J. Lamothe U.S. Dept. of the Interior Geological Survey, Geologic Division Branch of Analytical Laboratories 345 Middlefield Rd. Menlo Park, CA 94025	No
J.A. Caruso University of Cincinnati McMicken College of Arts & Sciences Dept. of Chemistry Van Wormer Adm. Bldg. Room 204 Cincinnati, OH 45221	No
F.W. Brown U.S. Dept. of the Interior Geological Survey, Geologic Division 12201 Sunrise Valley Drive Reston, VI 22092	No
Harvard Taylor U.S. Geological Survey 5293 Ward Road Arvada, CO 80002	No
Dr. Daivd Erdmann U.S. Geological Survey Atlanta Water Quality Lab 6481-H Peachtree Industrial Blvd. Suite 1 Doraville, GA 30340	No
Dr. Jim Callis University of Washington Chemistry BG-10 Bagley Hall Seattle, WA 98195	No
Dr. P.N. Soltanpowr Colorado Sate University Soil Testing Lab Fort Collins, CO 80523	No
Jim Seeger City of Detroit Water and Sewage/Wastewater 9300 West Jefferson Detroit, MI 48209	No

Non-Commercial Users:	Replied:
John Bray East Carolina University School of Medicine Department of Surgery Trace Metals Lab Greenville, NC 27834	No
Larry Williams Monsanto Company Central Research Building South 800 North Lindbergh Blvd. St. Louis, MO 63166	No
Eric Gauglitz NOAA Marine Fisheries 2725 Montlake Blvd., East Seattle, WA 98112	No
Joan Rummler Sel-Rex Division 75 River Road Nutley, NJ 07100	No
Steve Matza Shell Development 3737 Bellaire Blvd. Houston, TX 77025	Yes
Dr. Braselton Michigan State University 1330 South Harrison Road East Lansing, MI 48824	No
Jean Guimont Ministre Des Richesses Naturelles Centre de Recherches Minerales 2700 Rue Einstein Ste-Foy, Quebec, Canada GIP 3W8	No
Dr. Mark Cherwin Milwaukee Metro Sewerage District P.O. Box 2079 Milwaukee, WI 53201	No
Dr. Dennis Yates University of Missouri Environmental Trace Substance Lab Route 3 Columbia, MO 65201	No

Non-Commercial Users:	Replied:
Dr. Ken Smith Illinois Natural History Survey 236 NRSA Urbana, IL 61801	No
Sandy Gallagher U.S. Department of Agriculture Human Nutrition Lab 2420 Second Avenue, N P.O. Box 7166 University Station Grand Forks, ND 58201	No
Richard Leininger Indiana State Geological Survey 11th and Walnut Grove Bloomington, IN 47401	No
W. H. Patrick, Jr. Louisiana State University Lab for Wetland Soils and Sediments Baton Rouge, LA 70803	No
Dr. R. B. Swingle Environmental Protection Service (FMS) Department of Fisheries and Environment Lab Services 4195 Marine Drive West Vancouver, British Columbia, Canada	No
Dr. Bob Botto Exxon Research and Engineering Company P.O. Box 4255 Baytown, TX 77520	No
Bill Blakimore Food and Drug Administration National Center for Toxicological Research F2620-78 Jefferson, AK 72079	No
Pat Johnson Environmental Protection Agency Annapolis Field Office Annapolis Science Center Riva Road Annapolis, MD 21401	No

Non-Commercial Users:	Replied:
Dr. H.S. Samant Environmental Protection Services Water Quality Control Bedfore Institute of Oceanography Before, Nova Scotia Canada	Yes

XRF

R. H. April Colgate University Graduate School Dept. of Geology Hamilton, NY 13346	No useful information
J. F. Sieckarski Boston College Chestnut Hill Campus School of Arts & Sciences Dept. of Physics 140 Commonwealth Chestnut Hill, MA 02167	No
Gerry Stummer Dept. of Geochemistry UCLA Campus Drive Los Angeles, California	No
Dr. Neil McQuaker Environmental Laboratory Ministry of the Environment 3650 Wesbrook Crescent Vancouver, BC V6S 2L2 Canada	No
Jim Gill Marine Science Center UC Santa Cruz Santa Cruz, California	No
Don Hendricks University of Arizona Dept. of Soils Tucson, AR 85721	No

Non-Commercial Users:	Replied:
John Halloway Arizona State Dept. of Geochemistry Tempe, AR 85281	No
Bill Parry Dept. of Geochemistry University of Utah Salt Lake City, Utah	No useful information
Dr. Dick Feely Pacific Marine Env. Lab 7600 Sand Point Way NE Seattle, WA 98115	Yes
Dr. L. S. Birks Naval Research Lab Washington, DC	No
Dr. Brian Price Dept. of Geology University of Edinburgh Edinburgh Scotland	No
Mr. Dan Shadoan University of California, Davis Crocker Nuclear lab Davis, California	No

INAA

K. F. Flynn U.S. Dept. of Energy Argonne National Lab 9700 S. Cass Ave. Argonne, IL 60439	No
J.F. Sieckarski Boston College Chestnut Hill Campus School of Arts & Sciences Dept. of Physics 140 Commonwealth Chestnut Hill MA 02167	No

Non-Commercial Users:	Replied:
Dr. A. Chattopadhyay Trace Analysis Research Centre Dalhousie University Halifax, Nova Scotia	Too late for inclusion
Thomas E. Gills Activation Analysis Section Analysitcal Chemistry Division NBS Washington, DC 20234	Yes
Dr. J. C. Laul Physical Sciences Dept. Battelle Northwest Richland, WA 99532	No
Dr. Jack Weaver Nuclear Engineering Lab North Carolina State University Raleigh, NC	No
Dr. J. J. Rowe U.S. Geological Survey 12202 Sunrise Valley Drive Reston, VA 22092	No
Dr. E. S. Gladney University of California Los Alamos Scientific Lab MS 490 Los Alamos, NM 87545	No
Dr. Bill Zoller Dept. of Chemistry University of Maryland College Park, MD	No
Dr. Derek Spencer Woods Hole Oceanographic Institute Woods Hole, MA 02543	No
Dr. Robert Duce Graduate School of Oceanography University of Rhode Island Kingston, RI	No

END
FILMED
DATE
7-5-84
NTIS