REPORT OF

WASTE SOURCE INVENTORY

AND EVALUATION

DADE COUNTY, FLORIDA

TECHNICAL APPENDIX II

MINOR MUNICIPAL WASTEWATER

TREATMENT FACILITIES

ENVIRONMENTAL PROTECTION AGENCY

SOUTHEAST REGION

SOUTHEAST WATER LABORATORY

TECHNICAL SERVICES PROGRAM

ATHENS, GEORGIA

JUNE 1971

904-R-71-101

REPORT OF
WASTE SOURCE INVENTORY
AND EVALUATION
DADE COUNTY, FLORIDA

TECHNICAL APPENDIX II
MINOR MUNICIPAL WASTEWATER
TREATMENT FACILITIES

ENVIRONMENTAL PROTECTION AGENCY

SOUTHEAST REGION

SOUTHEAST WATER LABORATORY
TECHNICAL SERVICES PROGRAM

ATHENS, GEORGIA

JUNE 1971

U.S. Environmental Protection Agency
Sam Nunn Atlanta Federal Center
Region 4 Library
61 Forsyth Street S.W.
Atlanta, Georgia 30303

PREFACE

This Technical Appendix contains field and laboratory data and engineering evaluation reports for each of forty-seven minor domestic wastewater treatment plants in Dade County, Florida, which were visited during the period of December 1970 through February 1971. No attempt has been made to retabulate or "dress-up" the original work sheets and data forms.

Compilation in Technical Appendix form is for the convenience of pollution control agencies. Individual reports may be obtained from:

Technical Programs
Southeast Water Laboratory
College Station Road
Athens, Georgia 30601

Lower Florida Estuary Study
Operation Report on
American Hospital Supply Sewage Treatment Plant
N.W. 97th Avenue and 25th Street
Miami, Dade County, Florida
March 11, 1971

INTRODUCTION

The American Hospital Supply Sewage Treatment Plant was inspected and sampled on January 14, 1971, by Kenneth Schang. Grab samples of the influent and effluent after chlorination were obtained. The treatment plant consists of a Davco Contact Stabilization package unit with tertiary filters and chlorination prior to discharge to the N.W. 25th Street Canal.

SUMMARY AND CONCLUSIONS

Removal of BOD equalled 93.2% with 5.2 mg/l being measured in the effluent.

An influent settleable solids level of .2 ml/l was reduced to zero in the effluent. Total suspended solids removal efficiency equalled 25% producing an effluent concentration of 12 mg/l.

The chlorine residual was measured at 2 ppm in the dosing tank prior to discharge.

It is recommended that the low solids removal efficiency be investigated.

INVENTORY

1. Comminutor; at the influent to the treatment plant.
2. Contact tank; diffused air system.
3. Secondary sedimentation.
4. Stabilization tank; diffused air system.
5. Chlorine contact; prechlorination.
6. Tertiary filters.
7. Dosing tank plus additional chlorination.

RESULTS

Removal of BOD_5, COD and TOC equalled 93.2, 70.9 and 89.6% respectively, leaving effluent concentrations of 5.2, 39 and 13 mg/l. Based on the actual flow of 30,000 GPD, the corresponding loads were calculated as 1.3, 9.76 and 3.25 lbs. per day.

Solids efficiencies were significantly diverse. Settleable solids were removed with 100% efficiency while total suspended solids were removed with 25% efficiency. The total suspended solids influent concentration of 16 mg/l was only reduced to 12 mg/l indicating an effluent discharge 3 lbs. per day.

Nutrient loadings were relatively small. Values for ammonia nitrogen, nitrate-nitrite as N, and total phosphorus were calculated as .2, .95, and .1 lbs. per day.

DISCUSSION

The total suspended solids removal efficiency was considerably lower than a value to be expected from tertiary filtration. Although the effluent

concentration was only 12 mg/l the reduction efficiency should be considerably higher. It is recommended that this low efficiency value be further investigated.

In general the treatment plant is drastically underloaded. The actual flow was .03 MGD compared to the design capacity of .1 MGD. This created a low solids condition and undoubtedly reduced overall treatment efficiency.

General plant appearance was good; the facility is new.

Kenneth Schang

LOWER FLORIDA ESTUARY STUDY
DADE COUNTY WASTE SOURCE INVENTORY
TREATMENT PLANT – GENERAL INFORMATION

DATE OF VISIT 1-14-71
PLANT NAME: AMERICAN HOSPITAL SUPPLY
PLANT OWNER: AMERICAN HOSPITAL SUPPLY
ADDRESS N.W. 97 AVENUE AND 25 STREET
TELEPHONE —
COLLECTION SYSTEM – TYPE: SERVES INDUSTRIAL COMPLEX
OWNER: AMERICAN HOSPITAL SUPPLY
ADDRESS: N.W. 97 AVENUE AND 25 STREET
TELEPHONE —

DESIGN | AVERAGE DESIGN FLOW: .1 MGD YEAR COMPLETED: 1970
STREAM FLOW – cfs | DURATION – days FREQUENCY – Yrs
CONSTRUCTION COST NOT KNOWN
POPULATION SERVED APPROXIMATELY 150 - ONLY OFFICE STAFF AT PRESENT

OPERATION | ANNUAL COST NOT APPLICABLE
PERSONNEL ONE OPERATOR
LEVEL OF CERTIFICATION CLASS "C" OPERATOR
CONDITION OF EQUIPMENT NEW PLANT
OUTFALL | TYPE GRAVITY SIZE 10 INCH LENGTH APPROXIMATELY 400'
DISCHARGED TO: N.W. 25 STREET CANAL WATER COURSE MILEAGE: –
LATITUDE – LONGITUDE –
TREATMENT | (LIST UNITS IN ORDER, EXCLUDING SLUDGE TREATMENT & DISPOSAL)

INFLUENT COMMINUTOR, CONTACT TANK, SECONDARY SEDIMENTATION, STABILIZATION TANK, CHLORINE CONTACT, FILTERS, DOSING TANK + CHLORINATION (ADDITIONAL), CANAL

DAVCO - CONTACT STABILIZATION

SLUDGE | TREATMENT AEROBIC DIGESTER

DISPOSAL TRUCKED AWAY

REMARKS

PREPARED BY: KW Schang

LOWER FLORIDA ESTUARY STUDY
DADE COUNTY WASTE SOURCE INVENTORY
TREATMENT PLANT FIELD SHEET

PLANT AMERICAN HOSPITAL SUPPLY

							AVERAGE
DATE ON		1-14-71					
TIME ON		3:00					
DATE OFF		1-14-71					
TIME OFF		3:45					
FLOW	START	30,000 GPD					
	END						
	TOTAL						
	24 hr. Flow Rate						
INF.	TEMP. ON	78° F					
	PH - ON	–					
EFFLUENT	TEMP - ON	75° F					
	PH - ON	–					
	Cl. Residual	2 PPM					
	CHLORINE-ON						
	CHLORINE-OFF						
	ON-OFF-lbs						

DATE	WASTE CHARACTERISTICS	PLANT OPERATION	AUTO. SAMPLER OPERATION	SAMPLES COLLECTED BY
1-14-71	AVERAGE	NEW PLANT - LOW SOLIDS	–	SCHANG

LOWER FLORIDA ESTUARY STUDY
DADE COUNTY WASTE SOURCE INVENTORY
TREATMENT PLANT – SCHEMATIC DIAGRAM

PLANT American Hospital Supply

DRAW COMPLETE FLOW DIAGRAM OF TREATMENT PLANT AND OUTFALL. LABEL EACH UNIT. SHOW LOCATIONS OF SAMPLE COLLECTION AND FLOW MEASURING DEVICES

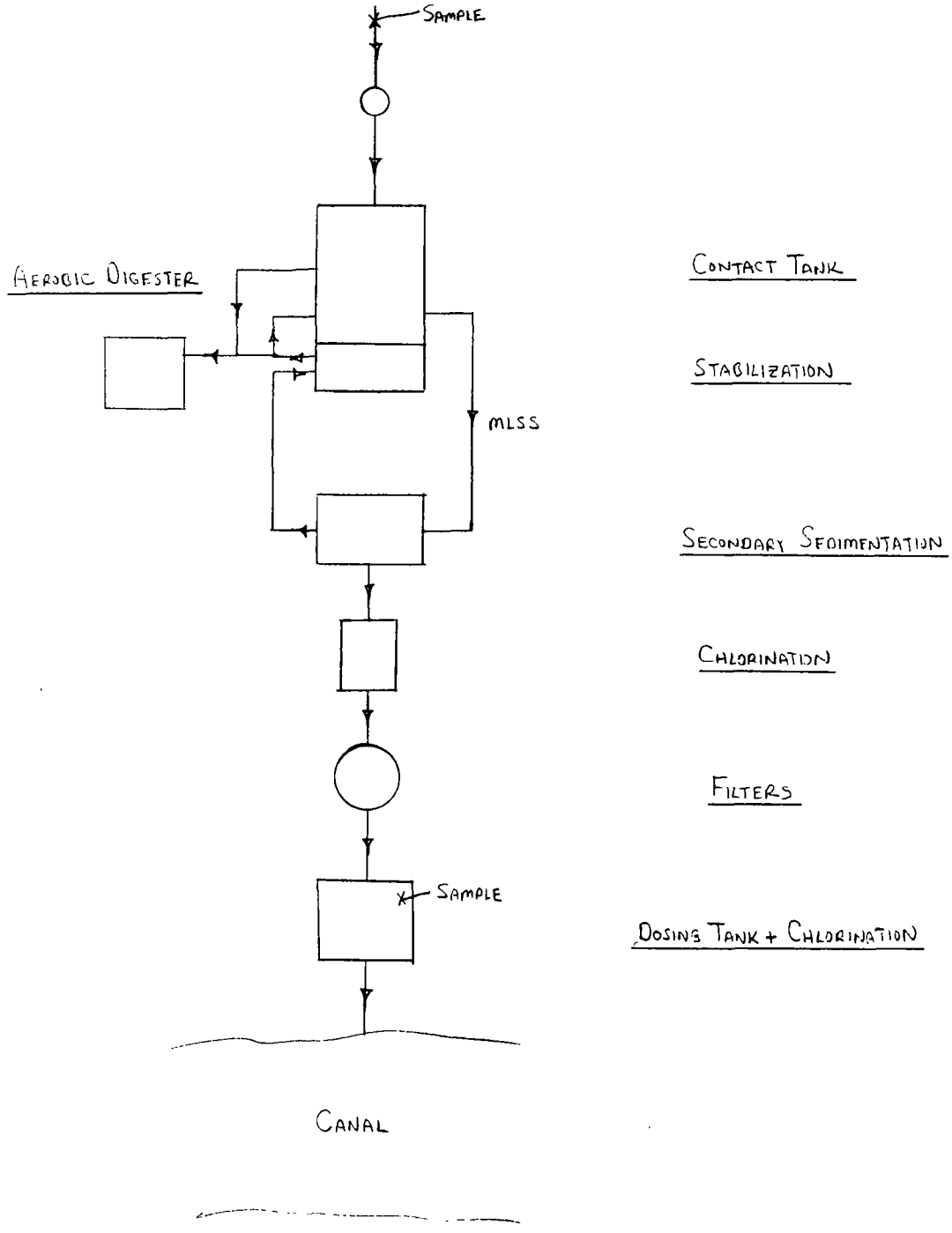

PREPARED BY: KW Schang

LOWER FLORIDA ESTUARY STUDY

Sheet ___ of _____

DADE COUNTY WASTE SOURCE INVENTORY

INFLUENT – EFFLUENT – DATA SUMMARY

PLANT American Hosp. Supply

							AVERAGE
DATE - OFF		1/14/71					
FLOW - MGD		.03					
5 DAY B O D mg/l	INFLUENT	77					
	EFFLUENT	5.2					
	IN - OUT						
	% REMOVAL	93.2					
	LOAD-lbs/day	13					
C O D mg/l	INFLUENT	134					
	EFFLUENT	39					
	IN - OUT						
	% REMOVAL	70.9					
	LOAD -lbs/day	1.7					
T S S mg/l	INFLUENT	16					
	EFFLUENT	12					
	IN - OUT						
	% REMOVAL	25.0					
	LOAD- lbs/day	3					
V S S mg/l	INFLUENT	12					
	EFFLUENT	8					
	IN - OUT						
	% REMOVAL	33.3					
	LOAD –lbs/day	2					
Settlable Solids ml/l	INFLUENT	.2					
	EFFLUENT	0					
	IN - OUT						
	% REMOVAL	100					
T O C mg/l	INFLUENT	125					
	EFFLUENT	13					
	IN - OUT						
	% REMOVAL	89.6					
	LOAD - lbs/day	3.25					

INFLUENT BOD POPULATION EQUIVALENT = 113. 11.26

FLUENT BOD POPULATION EQUIVALENT = 8 1.3

LOAD = FLOW (MGD) x EFFLUENT (mg/l) x 8.34 = lbs/day

Released
From The Desk Of
Michael V. Polito

Sheet____ of_____

LOWER FLORIDA ESTUARY STUDY
DADE COUNTY WASTE SOURCE INVENTORY
EFFLUENT DATA SUMMARY

PLANT Arca Hoya Supply

							AVERAGE or MEDIAN*
DATE - OFF		1/14/71					
FLOW - MGD		.03					
KTELDAHL NITROGEN as N	CONC.-mg/l	1.3					
	LOAD-lbs/day	.32					
AMMONIA NITROGEN as N	CONC.-mg/l	0.8					
	LOAD-lbs/day	.2					
ORGANIC NITROGEN as N	CONC.-mg/l	0.5					
	LOAD-lbs/day	.12					
NO_2 -NO_3 as N	CONC.-mg/l	3.8					
	LOAD-lbs/day	.95					
TOTAL PHOSPHORUS AS P	CONC.-mg/l	.4					
	LOAD-lbs/day	.1					
CHLORIDE	CONC.-mg/l	40					
TOTAL COLIFORM	CONC - MPN/100ml						
Fecal COLIFORM	CONC - MPN/100ml						

*Calculate Median for Total & Fecal Coliform Concentrations and Average for All Other Parameters.

Lower Florida Estuary Study
Operation Report on
Air Traffic Control Sewage Treatment Plant
7500 N.W. 58th Street
Medley, Dade County, Florida
March 15, 1971

INTRODUCTION

The Air Traffic Control Sewage Treatment Plant was inspected and sampled on December 8, 1970 by Kenneth Schang. Grab samples of the influent and effluent after chlorination were obtained. The treatment plant consists of a Chicago Pump-rated Aeration package unit which utilizes the extended aeration process and chlorination prior to discharge to the 58th Street Canal. Initial contact was made through the maintenance engineer, who supervises maintenance for the complex.

SUMMARY AND CONCLUSIONS

Removal efficiency for BOD_5 equalled 99.5%, producing an effluent concentration of 2.8 mg/l.

An influent settleable solids level of >40 ml/l was reduced 100%.

A chlorine residual of 10 ppm was measured in the chlorine contact tank.

INVENTORY

1. Comminutor.
2. Aeration tank; diffused air system.
3. Secondary sedimentation.
4. Chlorination.
5. Anaerobic sludge holding tank.

RESULTS

BOD_5, COD and TOC estimated loadings equalled .21, 3 and .68 lbs. per day based on the average design flow of .009 MGD. Respective effluent concentrations were 2.8, 40 and 9 mg/l indicating removal efficiencies of 99.5, 96.5 and 97.4%.

Solids removal was equally effective. Settleable solids efficiency was 100% and total suspended solids efficiency was 84.4%. The corresponding suspended solids loading was 6 lbs. per day.

Nitrate-nitrite as N was present in a high concentration of 120 mg/l in the final effluent. (It did not appear that detention time would be long enough to generate a concentration of this magnitude. The resulting effluent loading was 9 lbs. per day. The total phosphorus effluent concentration equalled 2.8 mg/l.

DISCUSSION

The operation of the plant appeared adequate excepting the piping for the return sludge line from the secondary clarifier. A conversation with Mr. John D'acy, representative of Chicago Pump, indicated that the faulty piping was to be replaced. The problem seemed to be caused by the material of which the pipe was constructed, not being resistant to corrosion.

The plant is operated by Mr. W. A. Coleman who is not certified.

Kenneth Schang

LOWER FLORIDA ESTUARY STUDY
DADE COUNTY WASTE SOURCE INVENTORY
TREATMENT PLANT – GENERAL INFORMATION

DATE OF VISIT 12-8-70
PLANT NAME: AIR TRAFFIC CONTROL
PLANT OWNER: AIR TRAFFIC CONTROL (FAA)
ADDRESS 7500 N.W. 58 STREET
TELEPHONE 633-8286
COLLECTION SYSTEM – TYPE: SERVES OFFICES
OWNER: AIR TRAFFIC CONTROL (FAA)
ADDRESS: 7500 N.W. 58 STREET
TELEPHONE 633-8286

DESIGN AVERAGE DESIGN FLOW: .009 MGD YEAR COMPLETED: 1963
STREAM FLOW — cfs DURATION — days FREQUENCY — Yrs
CONSTRUCTION COST NOT KNOWN
POPULATION SERVED NO PEOPLE

OPERATION ANNUAL COST NOT KNOWN
PERSONNEL NONE DESIGNED
LEVEL OF CERTIFICATION NONE
CONDITION OF EQUIPMENT FAIR

OUTFALL TYPE GRAVITY SIZE NOT KNOWN LENGTH NOT KNOWN
DISCHARGED TO: 58 STREET CANAL WATER COURSE MILEAGE: —
LATITUDE — LONGITUDE —

TREATMENT (LIST UNITS IN ORDER, EXCLUDING SLUDGE TREATMENT & DISPOSAL)
DESIGNED BUT – EXTENDED AERATION
COMMINUTOR, AERATION TANK, SECONDARY SEDIMENTATION, CHLORINATION,
CANAL.

SLUDGE TREATMENT ANAEROBIC DIGESTION - SLUDGE HOLDING TANK

DISPOSAL TRUCKED AWAY

REMARKS SCUM ON SECONDARY SEDIMENTATION TANK.

PREPARED BY: KW Chang

(Attachment to Oil Barge's Coal Treatment Plant)

Sheet 2 of 3

LOWER FLORIDA ESTUARY STUDY
DADE COUNTY WASTE SOURCE INVENTORY
TREATMENT PLANT FIELD SHEET

PLANT FAA

							AVERAGE
DATE ON		12-8-70					
TIME ON		3:00					
DATE OFF		12-8-70					
TIME OFF		3:45					
FLOW	START	No Flow					
	END	Meter					
	TOTAL						
	24 hr. Flow Rate						
INF.	TEMP. ON	27°	Sampled at	3:20			
	PH - ON	-					
EFFLUENT	TEMP - ON	27°	Sampled at	3:30			
	PH - ON	-					
	Cl. Residual	10 PPM					
	CHLORINE-ON						
	CHLORINE-OFF						
	ON-OFF-lbs						

DATE	WASTE CHARACTERISTICS	PLANT OPERATION	AUTO. SAMPLER OPERATION	SAMPLES COLLECTED BY
[illegible]	Highly Turbid Brown Septic - Slightly	Fair Scum on secondary sedimentation tank	-	Schaps

LOWER FLORIDA ESTUARY STUDY
DADE COUNTY WASTE SOURCE INVENTORY
TREATMENT PLANT – SCHEMATIC DIAGRAM

PLANT AIR TRAFFIC CONTROL

DRAW COMPLETE FLOW DIAGRAM OF TREATMENT PLANT AND OUTFALL. LABEL EACH UNIT. SHOW LOCATIONS OF SAMPLE COLLECTION AND FLOW MEASURING DEVICES

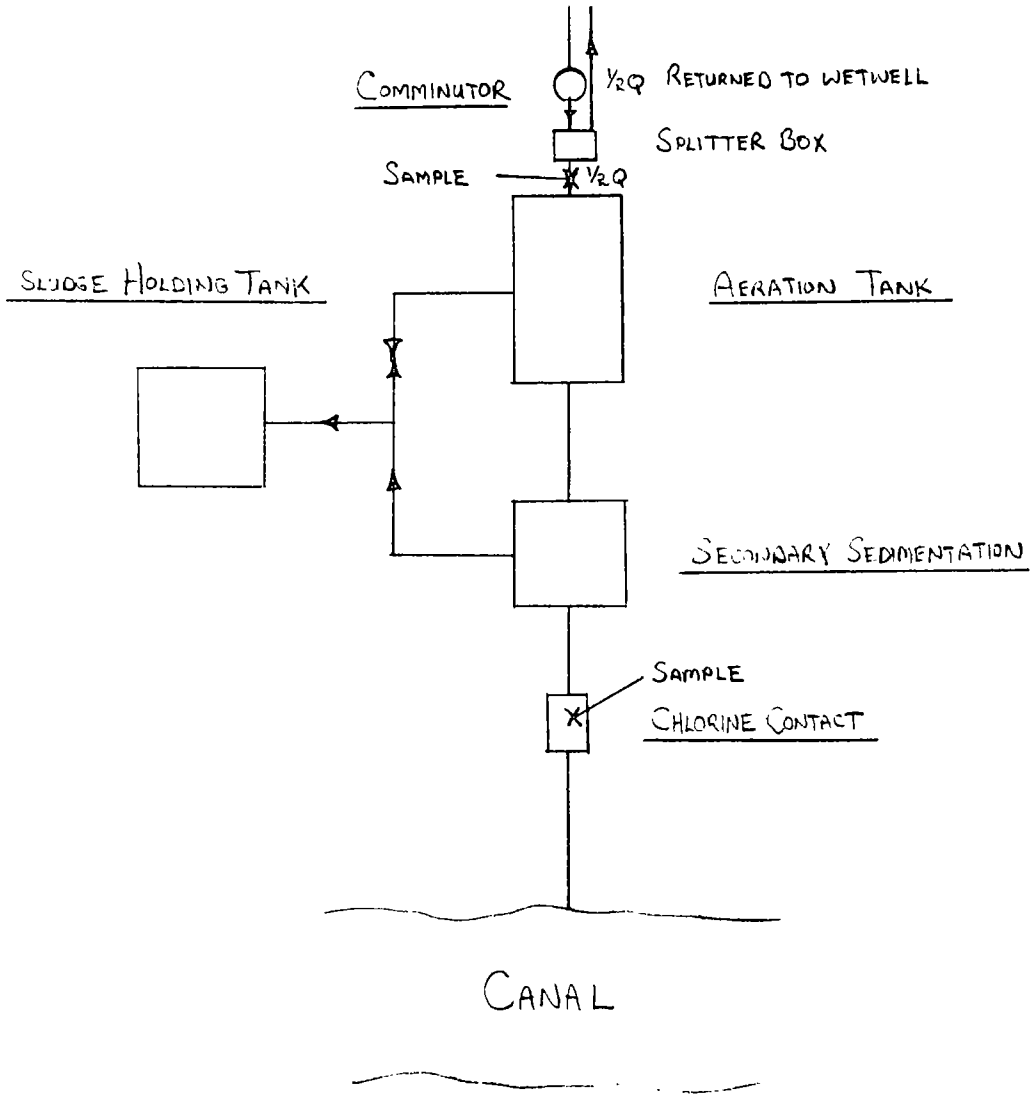

PREPARED BY: KW Schang

(Attachment to air Traffic Control Sewage Treatment Plant)

Sheet ___ of ___

LOWER FLORIDA ESTUARY STUDY

DADE COUNTY WASTE SOURCE INVENTORY

INFLUENT – EFFLUENT – DATA SUMMARY

PLANT F.A.A.

								AVERAGE
DATE - OFF		12/8						
FLOW - MGD		.009						
5 DAY B O D mg/l	INFLUENT	552						
	EFFLUENT	2.8						
	IN - OUT							
	% REMOVAL	99.5						
	LOAD-lbs/day	.21						
C O D mg/l	INFLUENT	1135						
	EFFLUENT	40						
	IN - OUT							
	% REMOVAL	96.5						
	LOAD -lbs/day	3						
T S S mg/l	INFLUENT	512						
	EFFLUENT	80						
	IN - OUT							
	% REMOVAL	84.4						
	LOAD- lbs/day	6						
V S S mg/l	INFLUENT	12						
	EFFLUENT	11						
	IN - OUT							
	% REMOVAL	08.3						
	LOAD –lbs/day	.82						
Settlable Solids ml/l	INFLUENT	>40						
	EFFLUENT	0.0						
	IN - OUT							
	% REMOVAL	100						
T O C mg/l	INFLUENT	340						
	EFFLUENT	9						
	IN - OUT							
	% REMOVAL	97.4						
	LOAD - lbs/day	.68						

INFLUENT BOD POPULATION EQUIVALENT = 197

EFFLUENT BOD POPULATION EQUIVALENT = 1

LOAD = FLOW (MGD) x EFFLUENT (mg/l) x 8.34 = lbs/day

From The Desk Of Michael V. Polito

Sheet____ of_____

LOWER FLORIDA ESTUARY STUDY
DADE COUNTY WASTE SOURCE INVENTORY
EFFLUENT DATA SUMMARY

PLANT F.A.A.

							AVERAGE or MEDIAN*
DATE - OFF		12/8					
FLOW - MGD		.009					
KTELDAHL NITROGEN as N	CONC.-mg/l	14.8*					
	LOAD-lbs/day	1.11					
AMMONIA NITROGEN as N	CONC.-mg/l	20.0*					
	LOAD-lbs/day	1.5					
ORGANIC NITROGEN as N	CONC.-mg/l	X					
	LOAD-lbs/day						
NO_2 -NO_3 as N	CONC.-mg/l	120					
	LOAD-lbs/day	9					
TOTAL PHOSPHORUS AS P	CONC.-mg/l	2.8					
	LOAD-lbs/day	.21					
CHLORIDE	CONC.-mg/l	171					
TOTAL COLIFORM	CONC - MPN/100ml						
Fecal COLIFORM	CONC - MPN/100ml						

*Calculate Median for Total & Fecal Coliform Concentrations and Average for All Other Parameters.

* anamalous result - use kjeldahl result for organic nitrogen.

Lower Florida Estuary Study
Report on Waterborne Wastes from
Airport Lanes Sewage Treatment Plant
1850 N.W. 42nd Avenue
Miami, Dade County, Florida
February 23, 1971

INTRODUCTION

The Airport Lanes Sewage Treatment Plant was inspected and sampled on December 7, 1970 by Kenneth Schang. Grab samples of the influent and effluent prior to chlorination were obtained. The treatment plant incorporates two extended aeration package units each with a capacity of .011 MGD. The effluent is chlorinated prior to discharge to the Tamiami Canal. At the time of inspection only the south plant was in operation. Initial contact was made through Mr. James Barlow, plant operator.

SUMMARY AND CONCLUSIONS

The effluent concentration of BOD_5 was measured at 6.76 mg/l effecting a 97.2% removal efficiency and .62 lbs. per day loading. Total suspended solids removal was 92.5% with 10 mg/l present in the effluent and .915 lbs. per day discharged based on the average design flow of .011 MGD for the one plant in operation. Settleable solids were not measurable in the effluent with 0.5 ml/l being present in the influent.

A chlorine residual of 5 ppm existed in an effluent sample taken from the dosing tank.

INVENTORY

1. Comminutor.
2. Aeration tanks, diffused air.
3. Secondary sedimentation.
4. Dosing tank plus chlorination.
5. Sludge holding tank, anaerobic.

RESULTS

The treatment plant achieved over 90% removal for all test parameters. BOD_5, COD and TOC percentages were 97.2, 92.8 and 91.2 respectively yielding 6.76, 34 and 10 mg/l.

Settleable solids removal efficiency was 100% and total suspended solids were measured at 10 mg/l with 92.5% removal and .915 lbs. per day loading.

Nutrient loadings were as follows: ammonia nitrogen: .72 lbs. per day with 7.8 mg/l effluent concentration, nitrate-nitrite nitrogen: 1.84 lbs. per day with 20 mg/l effluent concentration, and total phosphorus: .605 lbs. per day with 6.6 mg/l effluent concentration.

DISCUSSION

Mr. James Barlow and Mr. Bud Rollins, plant operators, are licensed class "C".

The overall appearance of the plant was good.

A flow meter should be installed.

Kenneth Schang

LOWER FLORIDA ESTUARY STUDY
DADE COUNTY WASTE SOURCE INVENTORY
TREATMENT PLANT – GENERAL INFORMATION

DATE OF VISIT 12-7-70
PLANT NAME: AIRPORT LANES
PLANT OWNER: AIRPORT LANES
ADDRESS 1850 N.W. 42 AVE
TELEPHONE 633-0545
COLLECTION SYSTEM – TYPE: SERVES MOTEL AND BOWLING ALLEY
OWNER: AIRPORT LANES
ADDRESS: 1850 N.W. 42 AVE
TELEPHONE 633-0545

DESIGN | AVERAGE DESIGN FLOW: .022 MGD YEAR COMPLETED: 1960
STREAM FLOW – cfs | DURATION – days FREQUENCY – Yrs
CONSTRUCTION COST NOT KNOWN
POPULATION SERVED APPROXIMATELY 240

OPERATION | ANNUAL COST NOT KNOWN
PERSONNEL REG GARDNER - OPERATOR
LEVEL OF CERTIFICATION CLASS "C" OPERATOR
CONDITION OF EQUIPMENT FAIR
OUTFALL | TYPE GRAVITY SIZE 8 INCH LENGTH 400 FEET
DISCHARGED TO: TAMIAMI CANAL WATER COURSE MILEAGE: NOT KNOWN
LATITUDE NOT KNOWN LONGITUDE NOT KNOWN
TREATMENT | (LIST UNITS IN ORDER, EXCLUDING SLUDGE TREATMENT & DISPOSAL)
COMMINUTOR, AERATION TANKS, SECONDARY SEDIMENTATION, DOSING TANK & CHLORINATION.
TOTAL.
EXTENDED AERATION

SLUDGE | TREATMENT SLUDGE HOLDING

DISPOSAL TRUCKED AWAY

REMARKS | 1) NORTH PLANT NOT IN OPERATION - AERATION TANKS WERE RECEIVING AIR TO PREVENT OVERAERATION OF SOUTH PLANT
2) CHLORINATION IN DOSING TANK.

PREPARED BY: KW Schang

LOWER FLORIDA ESTUARY STUDY
DADE COUNTY WASTE SOURCE INVENTORY
TREATMENT PLANT FIELD SHEET

Sheet 2 of 3

PLANT AIRPORT LANES

							AVERAGE
DATE ON		12-7-70					
TIME ON		2:00					
DATE OFF		12-7-70					
TIME OFF		2:45					
FLOW	START	No Flow					
	END	METER					
	TOTAL						
	24 hr. Flow Rate						
INF.	TEMP. ON	27°C	SAMPLED AT	2:40			
	PH - ON						
EFFLUENT	TEMP - ON	27°C	SAMPLED AT	2:30			
	PH - ON	—					
	Cl. Residual	5 PPM					
	CHLORINE-ON						
	CHLORINE-OFF						
	ON-OFF-lbs						

DATE	WASTE CHARACTERISTICS	PLANT OPERATION	AUTO. SAMPLER OPERATION	SAMPLES COLLECTED BY
12-7-70	No Influent	Good - Needed some maintenance	—	Schang

LOWER FLORIDA ESTUARY STUDY
DADE COUNTY WASTE SOURCE INVENTORY
TREATMENT PLANT – SCHEMATIC DIAGRAM

PLANT AIRPORT LANES

DRAW COMPLETE FLOW DIAGRAM OF TREATMENT PLANT AND OUTFALL. LABEL EACH UNIT. SHOW LOCATIONS OF SAMPLE COLLECTION AND FLOW MEASURING DEVICES

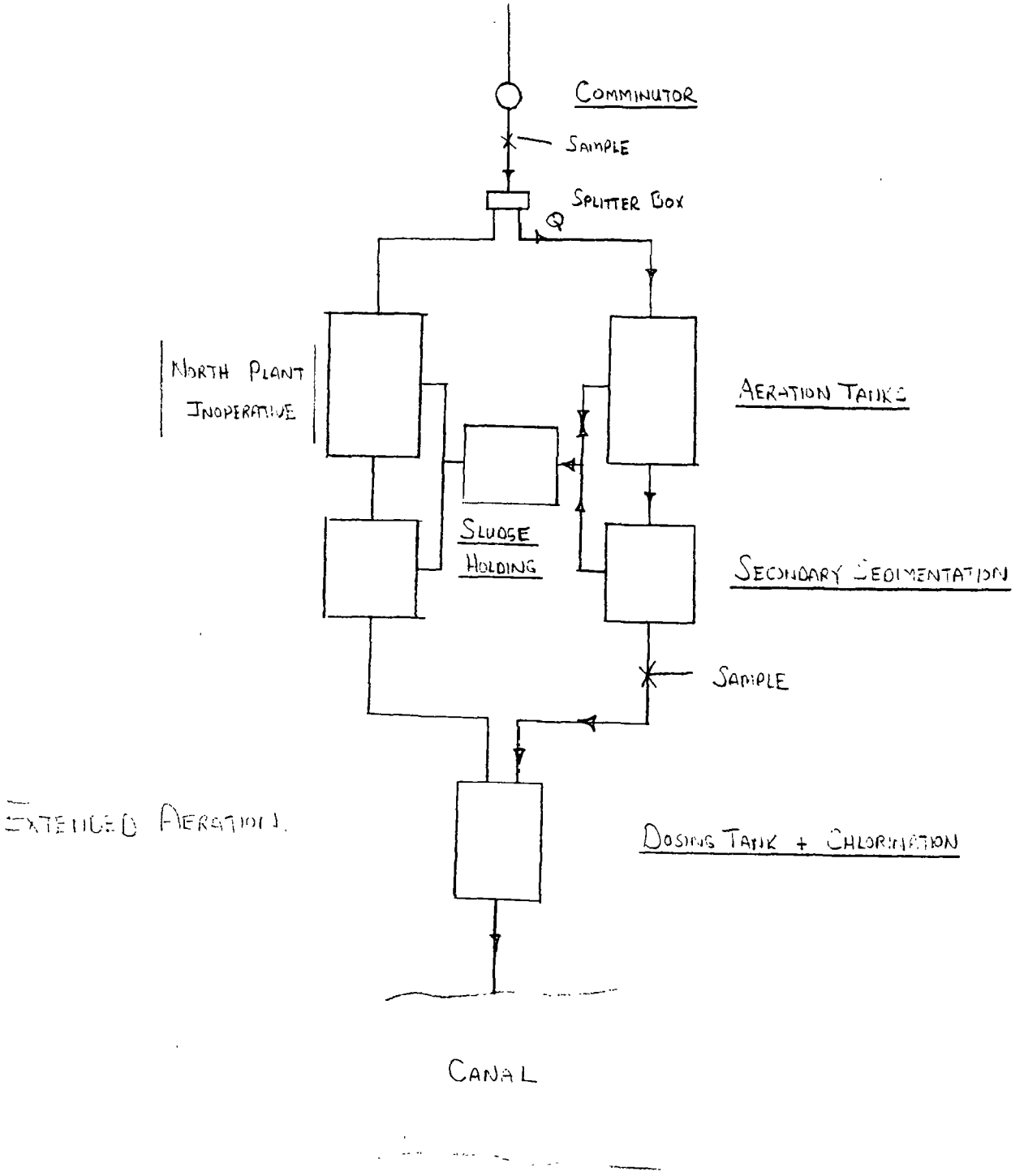

PREPARED BY: K W Schang

Sheet ___ of _____

LOWER FLORIDA ESTUARY STUDY
DADE COUNTY WASTE SOURCE INVENTORY
INFLUENT – EFFLUENT – DATA SUMMARY

PLANT AIRPORT LANES

								AVERAGE
DATE - OFF		12/7						
FLOW - MGD		.011						
5 DAY BOD mg/l	INFLUENT	243.8						
	EFFLUENT	6.76						
	IN - OUT							
	% REMOVAL	97.2						
	LOAD-lbs/day	.62	.62					
COD mg/l	INFLUENT	470						
	EFFLUENT	34						
	IN - OUT							
	% REMOVAL	92.8						
	LOAD -lbs/day	3.12	3.12					
TSS mg/l	INFLUENT	134						
	EFFLUENT	10						
	IN - OUT							
	% REMOVAL	92.5						
	LOAD- lbs/day	.915	.915					
VSS mg/l	INFLUENT	88						
	EFFLUENT	8						
	IN - OUT							
	% REMOVAL	90.9						
	LOAD –lbs/day	.735	.735					
Settlable Solids ml/l	INFLUENT	0.5						
	EFFLUENT	nil						
	IN - OUT	100						
	% REMOVAL							
TOC mg/l	INFLUENT	113						
	EFFLUENT	10						
	IN - OUT							
	% REMOVAL	91.2						
	LOAD - lbs/day	.915	.915					

INFLUENT BOD POPULATION EQUIVALENT = 126 126

EFFLUENT BOD POPULATION EQUIVALENT = 3.5 3.5

LOAD = FLOW (MGD) x EFFLUENT (mg/l) x 8.34 = lbs/day

From The Desk Of
Michael V. Polito

LOWER FLORIDA ESTUARY STUDY
DADE COUNTY WASTE SOURCE INVENTORY
EFFLUENT DATA SUMMARY

Sheet____ of_____

PLANT Airport Lanes

								AVERAGE or MEDIAN*
DATE - OFF		12/7						
FLOW - MGD		.011						
KTELDAHL NITROGEN as N	CONC.-mg/l	8.4						
	LOAD-lbs/day	.77	.77					
AMMONIA NITROGEN as N	CONC.-mg/l	7.8						
	LOAD-lbs/day	.715	.715					
ORGANIC NITROGEN as N	CONC.-mg/l	0.6						
	LOAD-lbs/day	.055	.055					
NO_2 -NO_3 as N	CONC.-mg/l	20.0						
	LOAD-lbs/day	1.835	1.835					
TOTAL PHOSPHORUS AS P	CONC.-mg/l	6.6						
	LOAD-lbs/day	.605	.605					
CHLORIDE	CONC.-mg/l	54						
TOTAL COLIFORM	CONC - MPN/100ml							
Fecal COLIFORM	CONC - MPN/100ml							

*Calculate Median for Total & Fecal Coliform Concentrations and Average for All Other Parameters.

Lower Florida Estuary Study
Report on Waterborne Wastes from
Barry College Sewage Treatment Plant
11300 N.E. 2nd Avenue
Miami Shores, Dade County, Florida
March 19, 1971

INTRODUCTION

The Barry College Sewage Treatment Plant was inspected and sampled on December 3, 1970 by Kenneth Schang. Grab samples at the influent and effluent were obtained. The treatment plant consists of three Chicago Pump Extended Aeration package units in parallel. Two have 15,000 GPD capacities and the remainder a 30,000 GPD capacity. There is no chlorination prior to discharge to a drainfield. The inspection was conducted in conjunction with Mr. Louis Pinero, plant operator.

SUMMARY AND CONCLUSIONS

There is no chlorination prior to discharge. BOD removal was 85.8% producing an effluent concentration of 29 mg/l with a loading of 7.25 lbs. per day calculated using the average daily flow of .03 MGD. Total suspended solids concentration in the effluent was measured as 46 mg/l which indicates a removal efficiency of 87% and a loading of 11.51 lbs. per day. The 5 ml/l of settleable solids present in the influent were reduced to 0.3 ml/l which is a removal efficiency of 94%.

INVENTORY

1. Comminutor.
2. Aeration tanks, diffused air.

3. Secondary sedimentation.

4. Dosing tank.

5. Anaerobic, sludge holding tank.

RESULTS

BOD, COD and TOC removal efficiencies were 85.8, 89.6 and 67.7% respectively with the effluent concentrations equalling 29, 66 and 21 mg/l respectively and loadings calculated as 7.25, 16.52 and 5.25 lbs. per day based on the average daily flow of 0.03 MGD. Total suspended solids measured at 46 mg/l in the effluent with removal efficiency being 87% and 11.51 lbs. per day being discharged. The influent settleable solids of 5 ml/l was reduced to 0.3 ml/l which is an efficiency of 94%.

Ammonia nitrogen, nitrate-nitrite nitrogen and total phosphorus concentrations equalled 3.4, 11.4 and 9.3 mg/l respectively with 0.85, 2.85 and 2.32 lbs. per day being discharged respectively.

DISCUSSION

Maintenance and operation of the treatment system appeared adequate although none of the personnel are licensed. The recommendations are that chlorination be incorporated and that the operator obtain a license.

Kenneth Schang

LOWER FLORIDA ESTUARY STUDY
DADE COUNTY WASTE SOURCE INVENTORY
TREATMENT PLANT – GENERAL INFORMATION

DATE OF VISIT 12-3-70
PLANT NAME: BARRY COLLEGE
PLANT OWNER: BARRY COLLEGE
ADDRESS 11300 NE 2 AVENUE
TELEPHONE 758-3392
COLLECTION SYSTEM – TYPE: SERVE THE COLLEGE
OWNER: BARRY COLLEGE
ADDRESS: 11300 NE 2 AVENUE
TELEPHONE 758-3392

DESIGN AVERAGE DESIGN FLOW: .06 MGD YEAR COMPLETED: 1961 PLANT 1 1969 PLANT 2
STREAM FLOW NA cfs DURATION NA days FREQUENCY NA Yrs
CONSTRUCTION COST NOT KNOWN
POPULATION SERVED 1000 SCHOOL 400 RESIDENTS

OPERATION ANNUAL COST $300
PERSONNEL LOUIS PINERO
LEVEL OF CERTIFICATION NONE
CONDITION OF EQUIPMENT GOOD

OUTFALL TYPE NOT APPLICABLE SIZE NOT APPLICABLE LENGTH NOT APPLICABLE
DISCHARGED TO: DRAINFIELD WATER COURSE MILEAGE: NOT APPLICABLE
LATITUDE NOT APPLICABLE LONGITUDE NOT APPLICABLE

TREATMENT (LIST UNITS IN ORDER, EXCLUDING SLUDGE TREATMENT & DISPOSAL)
COMMINUTOR, AERATION TANK, SECONDARY SEDIMENTATION, DOSING TANK.

SLUDGE TREATMENT SLUDGE HOLDING TANK – ANAEROBIC DIGESTION

DISPOSAL TRUCKED AWAY

REMARKS
1) NO CHLORINATION
2) CONSISTS OF 3 PLANT 2 EXTENDED AERATION 15,000 GPD EACH 1961
1 EXTENDED AERATION 30,000 GPD 1969
3) TOTAL DESIGN CAPACITY 60,000 GPD
ACTUAL AVERAGE FLOW 30,000 GPD

PREPARED BY: K W Schang

LOWER FLORIDA ESTUARY STUDY
DADE COUNTY WASTE SOURCE INVENTORY
TREATMENT PLANT FIELD SHEET

PLANT BARRY COLLEGE

							AVERAGE
DATE ON		12-3-70					
TIME ON		9:30					
DATE OFF		12-3-70					
TIME OFF		10:00					
FLOW	START	No FLOW					
	END	METER					
	TOTAL						
	24 hr. Flow Rate						
INF.	TEMP. ON	27°C	SAMPLED AT	9:45			
	PH - ON						
EFFLUENT	TEMP - ON	27°C	SAMPLED AT	9:50			
	PH - ON						
	Cl. Residual	No CHLORINATION					
	CHLORINE-ON						
	CHLORINE-OFF						
	ON-OFF-lbs						

DATE	WASTE CHARACTERISTICS	PLANT OPERATION	AUTO. SAMPLER OPERATION	SAMPLES COLLECTED BY
12-3-70		GOOD - SUDSING IN AERATION TANK.	–	SCHANG
		NO CHLORINATION PROVIDED		

LOWER FLORIDA ESTUARY STUDY
DADE COUNTY WASTE SOURCE INVENTORY
TREATMENT PLANT – SCHEMATIC DIAGRAM

PLANT BARRY COLLEGE

DRAW COMPLETE FLOW DIAGRAM OF TREATMENT PLANT AND OUTFALL. LABEL EACH UNIT. SHOW LOCATIONS OF SAMPLE COLLECTION AND FLOW MEASURING DEVICES

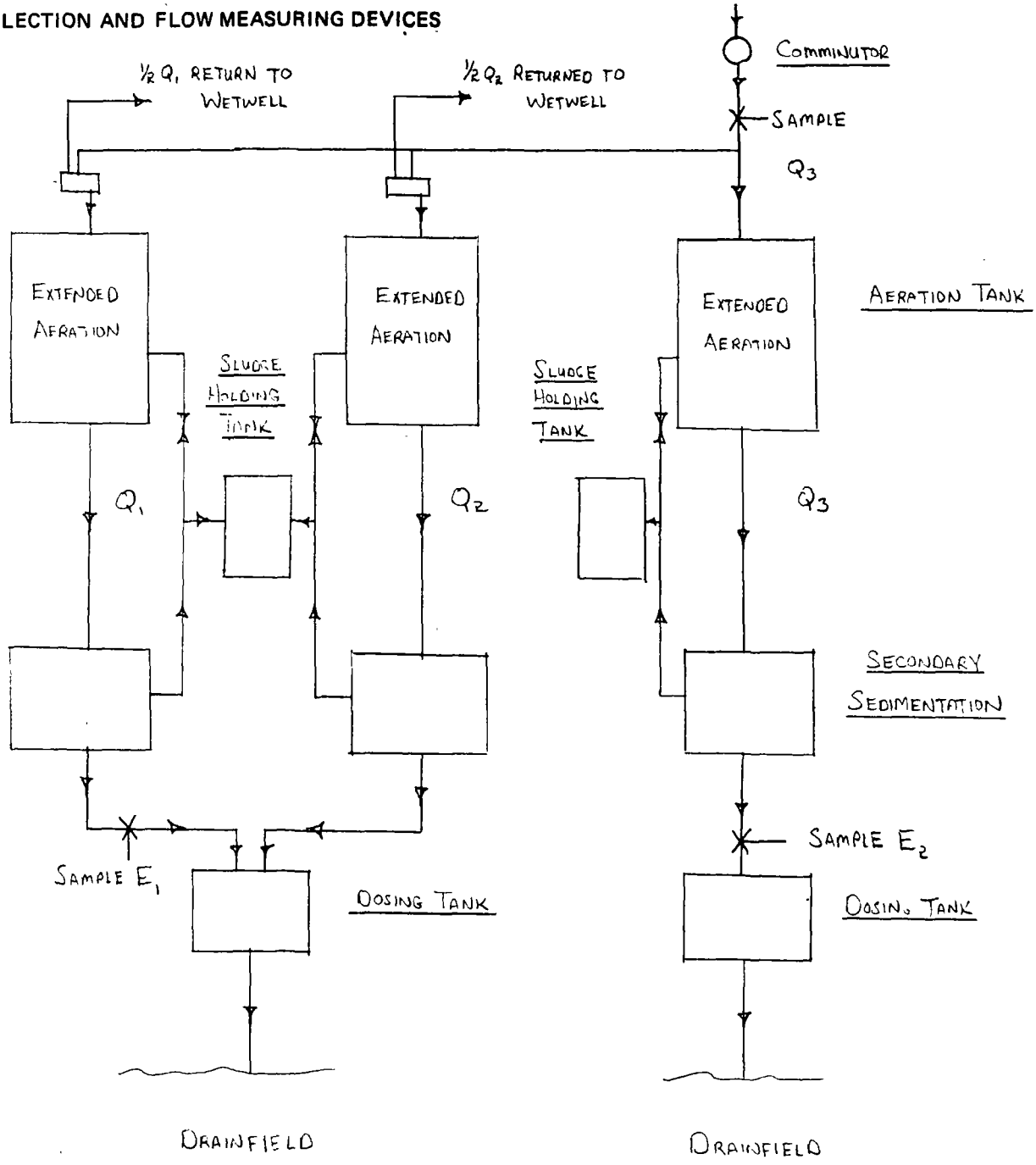

CHICAGO PUMP - EXTENDED AERATION

NOTE: Q_1 Q_2 Q_3 CAN ALL BE VARIED
NO Q_2 AT TIME OF VISIT

PREPARED BY: KW Schang

Sheet ___ of _____

LOWER FLORIDA ESTUARY STUDY
DADE COUNTY WASTE SOURCE INVENTORY
INFLUENT – EFFLUENT – DATA SUMMARY

PLANT Barry College

							AVERAGE
DATE - OFF		12/3					
FLOW - MGD		.03					
5 DAY B O D mg/l	INFLUENT	204					
	EFFLUENT	29					
	IN - OUT						
	% REMOVAL	85.8					
	LOAD-lbs/day	7.255	7.255				
C O D mg/l	INFLUENT	636					
	EFFLUENT	66					
	IN - OUT						
	% REMOVAL	89.6					
	LOAD -lbs/day	16.52	16.52				
T S S mg/l	INFLUENT	356					
	EFFLUENT	46					
	IN - OUT						
	% REMOVAL	87					
	LOAD- lbs/day	11.51	11.51				
V S S mg/l	INFLUENT	[illegible]					
	EFFLUENT	36					
	IN - OUT						
	% REMOVAL	84.8					
	LOAD –lbs/day	9	9.005				
Settlable Solids ml/l	INFLUENT	5.0					
	EFFLUENT	0.3					
	IN - OUT						
	% REMOVAL	94					
T O C mg/l	INFLUENT	65					
	EFFLUENT	21					
	IN - OUT						
	% REMOVAL	67.7					
	LOAD - lbs/day	5.354					

INFLUENT BOD POPULATION EQUIVALENT = 299 299

FLUENT BOD POPULATION EQUIVALENT = 42 42

LOAD = FLOW (MGD) x EFFLUENT (mg/l) x 8.34 = lbs/day

From The Desk Of
Michael V. Polito

Sheet____ of_____

LOWER FLORIDA ESTUARY STUDY
DADE COUNTY WASTE SOURCE INVENTORY
EFFLUENT DATA SUMMARY

PLANT Barry College

							AVERAGE or MEDIAN*
DATE - OFF		12/3					
FLOW - MGD		.03					
KJELDAHL NITROGEN as N	CONC.-mg/l	59					
	LOAD-lbs/day	1.475	1.475				
AMMONIA NITROGEN as N	CONC.-mg/l	3.4					
	LOAD-lbs/day	.85	.85				
ORGANIC NITROGEN as N	CONC.-mg/l	2.5					
	LOAD-lbs/day	.625	.625				
NO_2 -NO_3 as N	CONC.-mg/l	11.4					
	LOAD-lbs/day	2.85	2.85				
TOTAL PHOSPHORUS AS P	CONC.-mg/l	9.3					
	LOAD-lbs/day	2.325	2.325				
CHLORIDE	CONC.-mg/l	70.0					
TOTAL COLIFORM	CONC - MPN/100ml						
Fecal COLIFORM	CONC - MPN/100ml						

*Calculate Median for Total & Fecal Coliform Concentrations and Average for All Other Parameters.

.17 pounds = 1 person

Lower Florida Estuary Study
Operation Report on
Biltmore Hotel Sewage Treatment Plant
1200 Anastasia Avenue
Coral Gables, Dade County, Florida
March 11, 1971

INTRODUCTION

The Biltmore Hotel Sewage Treatment Plant was inspected and sampled on January 12, 1971, by Kenneth Schang. Grab samples of the influent and effluent after chlorination were obtained. The treatment plant is a .3 MGD capacity trickling filter system with chlorination prior to discharge into the Coral Gables Canal.

SUMMARY AND CONCLUSIONS

The underloaded condition of this treatment plant eliminates it as a pollutional hazard.

BOD influent concentration equals 10 mg/l with 1.2 mg/l being measured in the effluent.

Settleable solids influent level was .1 ml/l. The treatment plant reduced the value to zero ml/l.

The chlorine residual was .1 ppm, measured at the point of canal discharge.

INVENTORY

1. Comminutor.
2. Primary settling.
3. Trickling filter.

4. Secondary settling.

5. Chlorine contact.

6. Anaerobic sludge digester with sludge drying beds.

RESULTS

The most significant evaluation can be established by comparing the influent and effluent chemcial parameters. Actual flow was not measurable although it is known to be extremely low; based on the fact that the .3 MGD capacity treatment plant is now taking care of the wastes from the Biltmore Golf Course facilities only. For this reason, loading figures are not valid.

The BOD_5 and COD influent concentrations of 10 and 575 mg/l were reduced to 1.2 and 17 mg/l respectively. The TOC influent value was 11 mg/l and no reduction of this level was effected.

Settleable solids influent value was .1 ml/l and the corresponding effluent value was 0 ml/l. Influent total suspended solids were measured at 26 mg/l and a removal efficiency of 61.5% produced an effluent concentration of 10 mg/l.

Nutrient levels were insignificant: Kjeldahl nitrogen: .6 mg/l, nitrate-nitrite as N: .05 mg/l and total phosphorus: .2 mg/l.

DISCUSSION

No recommendation is necessary with regard to plant operation.

None of the maintenance personnel are licensed.

The general appearance of the plant was good.

Kenneth Schang

LOWER FLORIDA ESTUARY STUDY
DADE COUNTY WASTE SOURCE INVENTORY
TREATMENT PLANT – GENERAL INFORMATION

DATE OF VISIT 1-12-71
PLANT NAME: BILTMORE HOTEL
PLANT OWNER: BILTMORE HOTEL - COUNTRY CLUB
ADDRESS 1200 ANASTASIA AVE.
TELEPHONE 446-0649
COLLECTION SYSTEM – TYPE: SERVES COUNTRY CLUB
OWNER: BILTMORE HOTEL - COUNTRY CLUB
ADDRESS: 1200 ANASTASIA AVE.
TELEPHONE 446-0649

DESIGN AVERAGE DESIGN FLOW: .3 MGD YEAR COMPLETED: NOT KNOWN
STREAM FLOW – cfs | DURATION – days FREQUENCY ~ Yrs
CONSTRUCTION COST NOT KNOW
POPULATION SERVED APPROXIMATELY 100

OPERATION ANNUAL COST NOT KNOWN
PERSONNEL Maintenance
LEVEL OF CERTIFICATION None
CONDITION OF EQUIPMENT OK

OUTFALL TYPE Gravity SIZE – LENGTH –
DISCHARGED TO: CORAL GABLES CANAL WATER COURSE MILEAGE: –
LATITUDE – LONGITUDE –

TREATMENT (LIST UNITS IN ORDER, EXCLUDING SLUDGE TREATMENT & DISPOSAL)
COMMINUTOR, PRIMARY SETTLING, TRICKLING FILTER, SETTLING, CHLORINE CONTACT

SLUDGE TREATMENT ANAEROBIC DIGESTER

DISPOSAL SLUDGE DRYING BEDS

REMARKS SEVERELY UNDERLOADED - THERE APPEARED TO BE CONSIDERABLE INFILTRATION.

PREPARED BY: KW Schang

Sheet 2 of 3

LOWER FLORIDA ESTUARY STUDY
DADE COUNTY WASTE SOURCE INVENTORY
TREATMENT PLANT FIELD SHEET

PLANT BILTMORE HOTEL

							AVERAGE
DATE ON		1-12-71					
TIME ON		12:30					
DATE OFF		1-12-71					
TIME OFF		1:00					
FLOW	START	NO FLOW METER					
	END	NO WEIR					
	TOTAL						
	24 hr. Flow Rate						
INF.	TEMP. ON	78° F					
	PH - ON	-					
EFFLUENT	TEMP - ON	78° F					
	PH - ON	-					
	Cl. Residual	.1 PPm					
	CHLORINE-ON						
	CHLORINE-OFF						
	ON-OFF-lbs						

DATE	WASTE CHARACTERISTICS	PLANT OPERATION	AUTO. SAMPLER OPERATION	SAMPLES COLLECTED BY
1-12 71	VERY CLEAR - APPARENTLY LARGE QUANTITIES OF INFILTRATION	SEVERLY UNDERLOADED	-	SCHANG

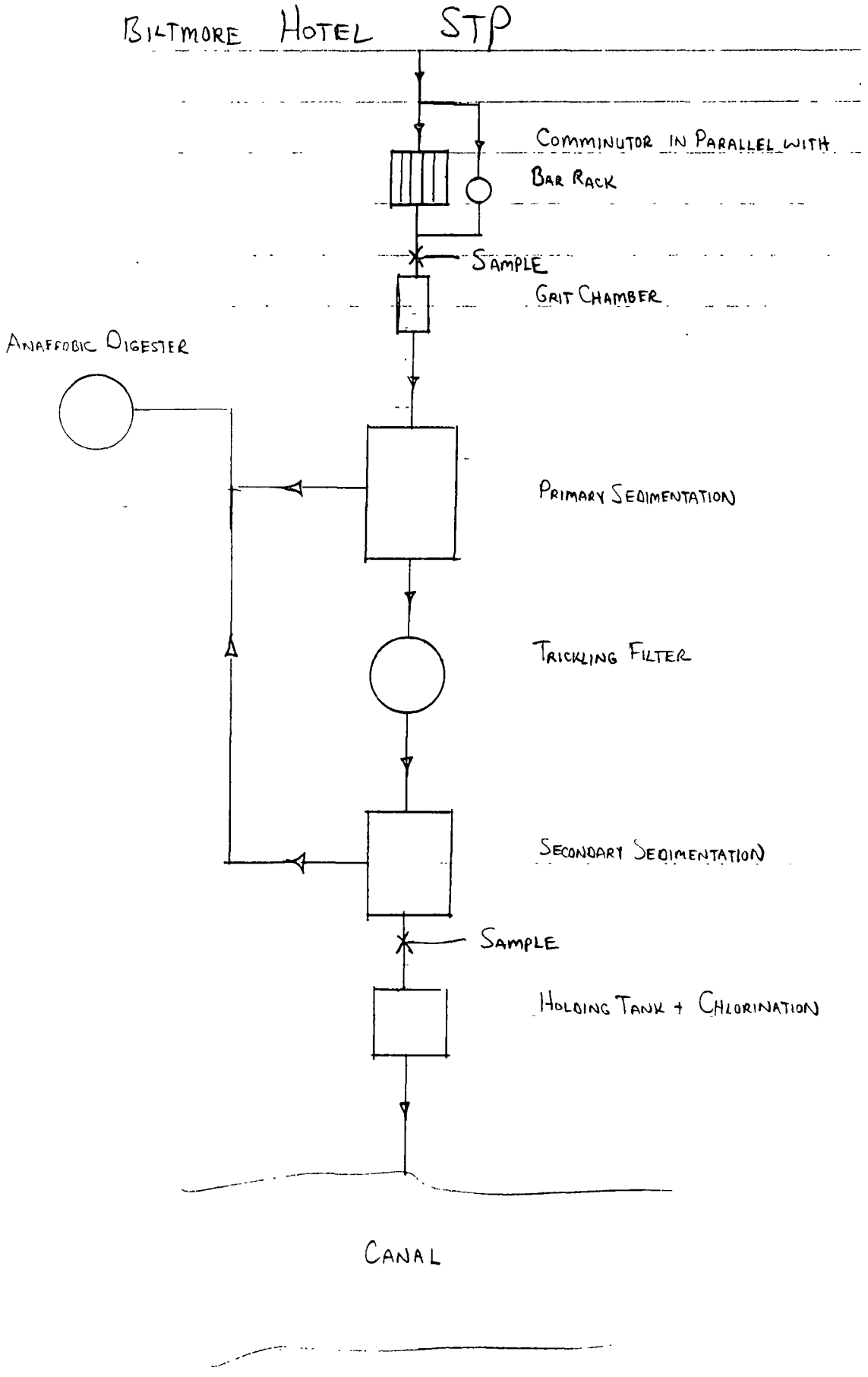
BILTMORE HOTEL STP
COMMINUTOR IN PARALLEL WITH
BAR RACK
SAMPLE
GRIT CHAMBER
ANAEROBIC DIGESTER
PRIMARY SEDIMENTATION
TRICKLING FILTER
SECONDARY SEDIMENTATION
SAMPLE
HOLDING TANK + CHLORINATION
CANAL

Sheet ___ of _____

LOWER FLORIDA ESTUARY STUDY
DADE COUNTY WASTE SOURCE INVENTORY
INFLUENT – EFFLUENT – DATA SUMMARY

PLANT Biltmore Hotel

								AVERAGE
DATE - OFF		1/12/71						
FLOW - MGD		—						
5 DAY BOD mg/l	INFLUENT	10						
	EFFLUENT	1.2						
	IN - OUT							
	% REMOVAL	88.0						
	LOAD-lbs/day	—						
COD mg/l	INFLUENT	575						
	EFFLUENT	17						
	IN - OUT							
	% REMOVAL	97.0						
	LOAD -lbs/day	—						
TSS mg/l	INFLUENT	26						
	EFFLUENT	10						
	IN - OUT							
	% REMOVAL	61.5						
	LOAD- lbs/day	—						
VSS mg/l	INFLUENT	20						
	EFFLUENT	6						
	IN - OUT							
	% REMOVAL	70						
	LOAD –lbs/day	—						
Settlable Solids ml/l	INFLUENT	.1						
	EFFLUENT	0.0						
	IN - OUT							
	% REMOVAL	100						
		—						
TOC mg/l	INFLUENT	11						
	EFFLUENT	11						
	IN - OUT							
	% REMOVAL	0						
	LOAD - lbs/day	—						

INFLUENT BOD POPULATION EQUIVALENT = _____

EFFLUENT BOD POPULATION EQUIVALENT = _____

LOAD = FLOW (MGD) x EFFLUENT (mg/l) x 8.34 = lbs/day

Released
From The Desk Of
Michael V. Polito

LOWER FLORIDA ESTUARY STUDY
DADE COUNTY WASTE SOURCE INVENTORY
EFFLUENT DATA SUMMARY

Sheet____ of____

PLANT Biscayne Hotel

							AVERAGE or MEDIAN*
DATE - OFF		1/12					
FLOW - MGD		—					
KTELDAHL NITROGEN as N	CONC.-mg/l	0.6					
	LOAD-lbs/day	—					
AMMONIA NITROGEN as N	CONC.-mg/l	0.2					
	LOAD-lbs/day	—					
ORGANIC NITROGEN as N	CONC.-mg/l	0.4					
	LOAD-lbs/day	—					
NO_2 -NO_3 as N	CONC.-mg/l	0.05					
	LOAD-lbs/day	—					
TOTAL PHOSPHORUS AS P	CONC.-mg/l	0.2					
	LOAD-lbs/day	—					
CHLORIDE	CONC.-mg/l	21					
TOTAL COLIFORM	CONC - MPN/100ml						
Fecal COLIFORM	CONC - MPN/100ml						

*Calculate Median for Total & Fecal Coliform Concentrations and Average for All Other Parameters.

Lower Florida Estuary Study
Operation Report on
Blue Lakes Trailer Park Sewage Treatment Plant
S.W. 102 Avenue and W. Flagler Street
Miami, Dade County, Florida
January 25, 1971

INTRODUCTION

The Blue Lakes Trailer Park Sewage Treatment Plant was inspected and sampled on December 17, 1970, by Kenneth Schang and Gary Cohen (Dade County Pollution Control Inspector). Grab samples of the influent and effluent after chlorination were obtained. The treatment plant is a Marolf Extended Aeration package unit with chlorination prior to effluent discharge into the Tamiami Canal. The inspection was conducted in conjunction with an assistant to Mr. Bruce Rapee, who maintains the system.

SUMMARY AND CONCLUSIONS

Treatment efficiency with respect to BOD_5 was 98%, with an effluent concentration of 4.2 ppm and an estimated stream loading of 1.19 lbs. per day, based on an average design flow of .034 MGD.

Settleable solids provide a more significant pollutional factor in that removal efficiency was only 50% with .7 ml/l settleable solids in the effluent.

It is recommended that the chlorine contact chamber be cleaned. This cleaning should be done so as not to release the accumulated solids to the Tamiami Canal.

INVENTORY

1. Basket screen, at the influent pipe to the wet well.
2. Aeration tanks, diffused air.
3. Secondary sedimentation.
4. Chlorine contact.
5. Aerobic sludge digester.

RESULTS

Treatment efficiency for BOD_5 and COD was 90% + with stream loadings being estimated at 1.19 and 15.31 lbs. per day respectively, based on the average design flow.

TOC removal efficiency was 81% with 20 ppm effluent concentration and an estimated 5.67 lbs. per day loading.

Suspended solids removal was 87.1% with only the settleable solids test parameter dropping below standard efficiency requirements at 50%; this is compensated by the low discharge concentration of .7 ml/l.

Nitrogen loadings were: organic-N, .74 lbs. per day, nitrate-nitrite as N, .45 lbs. per day, and the total phosphorus load was 4.05 lbs. per day, all based on design flow.

The chlorine residual approached 2 ppm with an adequate apparent contact time based on Dade County standards. An effective kill of organisms should be obtained.

DISCUSSION

The treatment plant appeared to be adequately maintained with the exception of the chlorine contact chamber.

An accumulation of solids in the chlorine contact chamber result in the carry-over of solids into the final effluent. These solids should be removed in such a manner that they will not escape into the Tamiami Canal, and operations should be modified to prevent their future accumulation.

Mechanical equipment was in good working order and performing properly.

Mr. Bruce Rapee, although not licensed at the time of inspection, had recently completed the class "C" operating examination and was awaiting the results.

Kenneth Schang

LOWER FLORIDA ESTUARY STUDY
DADE COUNTY WASTE SOURCE INVENTORY
TREATMENT PLANT – GENERAL INFORMATION

DATE OF VISIT 12-17-70
PLANT NAME: BLUE LAKES TRAILER PARK
PLANT OWNER: BLUE LAKES TRAILER PARK
ADDRESS S.W. 102 AVENUE AND W. FLAGLER STREET
TELEPHONE .226-4813
COLLECTION SYSTEM – TYPE: SERVES TRAILER PARK
OWNER: BLUE LAKES TRAILER PARK
ADDRESS: S.W. 102 AVENUE AND W. FLAGLER STREET
TELEPHONE 226-4813

DESIGN AVERAGE DESIGN FLOW: .034 MGD YEAR COMPLETED: 1960 APPROXIMATELY
STREAM FLOW NK cfs DURATION NK days FREQUENCY NK Yrs
CONSTRUCTION COST NOT KNOWN
POPULATION SERVED [illegible]

OPERATION ANNUAL COST [illegible]
PERSONNEL [illegible]
LEVEL OF CERTIFICATION [illegible], RESULTS NOT [illegible]
CONDITION OF EQUIPMENT OK

OUTFALL TYPE GRAVITY SIZE 8 INCH LENGTH 300 FEET
DISCHARGED TO: TAMIAMI CANAL WATER COURSE MILEAGE:
LATITUDE LONGITUDE

TREATMENT (LIST UNITS IN ORDER, EXCLUDING SLUDGE TREATMENT & DISPOSAL)
EXTENDED AERATION - MAROLF
BASKET SCREEN, AERATION TANKS, SECONDARY SEDIMENTATION, CHLORINE CONTACT, CANAL

SLUDGE TREATMENT AEROBIC DIGESTION

DISPOSAL TRUCKED AWAY

REMARKS 1) EFFLUENT FROM SECONDARY SEDIMENTATION LOOKED BETTER THAN EFFLUENT FROM CHLORINE CONTACT.

PREPARED BY: [illegible]

LOWER FLORIDA ESTUARY STUDY
DADE COUNTY WASTE SOURCE INVENTORY
TREATMENT PLANT FIELD SHEET

PLANT BLUE LAKE TRAILER PARK

							AVERAGE
DATE ON		12-17-70					
TIME ON		9:00					
DATE OFF		12-17-70					
TIME OFF		9:50					
FLOW	START	No Flow					
	END	METER					
	TOTAL	No Flow					
	24 hr. Flow Rate						
INF.	TEMP. ON	29°C	SAMPLED AT	9:40			
	PH - ON	–					
EFFLUENT	TEMP - ON	27°C	SAMPLED AT	9:45			
	PH - ON	–					
	Cl. Residual	2.0					
	CHLORINE-ON						
	CHLORINE-OFF						
	ON-OFF-lbs						

DATE	WASTE CHARACTERISTICS	PLANT OPERATION	AUTO. SAMPLER OPERATION	SAMPLES COLLECTED BY
12-17-70		OK - DIRTY CHLORINE CONTACT CHAMBER	–	SCHANG

LOWER FLORIDA ESTUARY STUDY
DADE COUNTY WASTE SOURCE INVENTORY
TREATMENT PLANT – SCHEMATIC DIAGRAM

PLANT BLUE LAKES TRAILER PARK

DRAW COMPLETE FLOW DIAGRAM OF TREATMENT PLANT AND OUTFALL. LABEL EACH UNIT. SHOW LOCATIONS OF SAMPLE COLLECTION AND FLOW MEASURING DEVICES

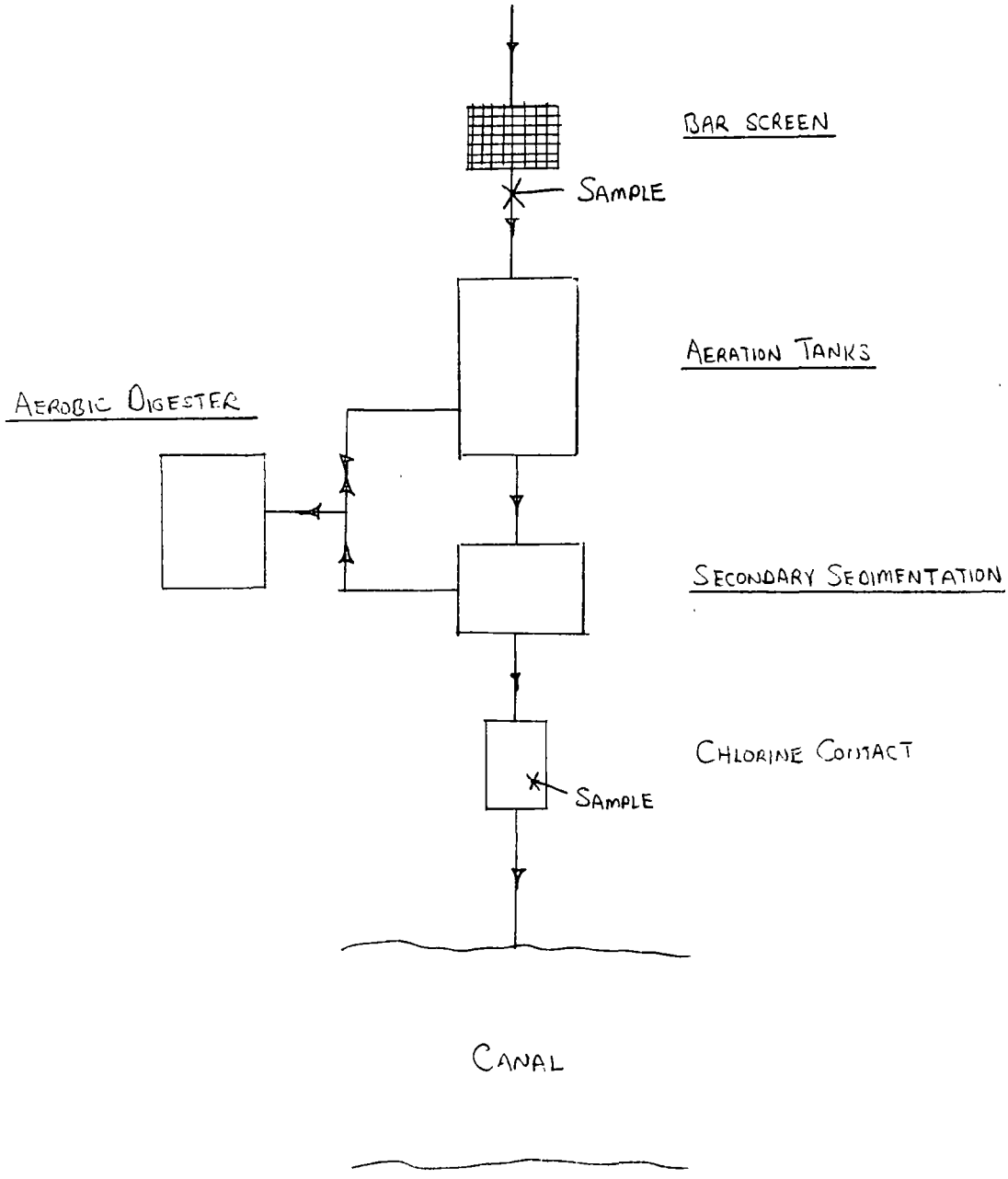

PREPARED BY: KW Schang

Sheet ___ of _____

LOWER FLORIDA ESTUARY STUDY
DADE COUNTY WASTE SOURCE INVENTORY
INFLUENT – EFFLUENT – DATA SUMMARY

PLANT Blue Lakes

							AVERAGE
DATE - OFF		12/17/90					
FLOW - MGD		.034					
5 DAY BOD mg/l	INFLUENT	212					
	EFFLUENT	4.2					
	IN - OUT	207.8					
	% REMOVAL	98.0					
	LOAD-lbs/day	1.19					
COD mg/l	INFLUENT	679					
	EFFLUENT	54					
	IN - OUT	625					
	% REMOVAL	92.1					
	LOAD -lbs/day	15.31					
TSS mg/l	INFLUENT	404					
	EFFLUENT	52					
	IN - OUT	352					
	% REMOVAL	87.1					
	LOAD- lbs/day	14.74					
VSS mg/l	INFLUENT	392					
	EFFLUENT	40					
	IN - OUT	352					
	% REMOVAL	89.8					
	LOAD –lbs/day	11.34					
Settlable Solids ml/l	INFLUENT	1.4					
	EFFLUENT	0.7					
	IN - OUT	0.7					
	% REMOVAL	50.0					
TOC mg/l	INFLUENT	105					
	EFFLUENT	20					
	IN - OUT	85					
	% REMOVAL	81.0					
	LOAD - lbs/day	5.67					

INFLUENT BOD POPULATION EQUIVALENT = 353

EFFLUENT BOD POPULATION EQUIVALENT = 7

LOAD = FLOW (MGD) x EFFLUENT (mg/l) x 8.34 = lbs/day

Load based on design flow = 0.034 MGD

Sheet____ of_____

LOWER FLORIDA ESTUARY STUDY
DADE COUNTY WASTE SOURCE INVENTORY
EFFLUENT DATA SUMMARY

PLANT Blue Lakes

							AVERAGE or MEDIAN*
DATE - OFF		12/17					
FLOW - MGD		.034					
KTELDAHL NITROGEN as N	CONC.-mg/l	3.1					
	LOAD-lbs/day	.88					
AMMONIA NITROGEN as N	CONC.-mg/l	0.5					
	LOAD-lbs/day	.14					
ORGANIC NITROGEN as N	CONC.-mg/l	2.6					
	LOAD-lbs/day	.74					
NO_2 -NO_3 as N	CONC.-mg/l	1.6					
	LOAD-lbs/day	.45					
TOTAL PHOSPHORUS AS P	CONC.-mg/l	14.3					
	LOAD-lbs/day	4.05					
CHLORIDE	CONC.-mg/l	57					
TOTAL COLIFORM	CONC - MPN/100ml						
Fecal COLIFORM	CONC - MPN/100ml						

*Calculate Median for Total & Fecal Coliform Concentrations and Average for All Other Parameters.

Load based on design flow of 0.034 MGD.

Lower Florida Estuary Study
Report on Waterborne Wastes from
Camp Matecumbe Sewage Treatment Plant
S.W. 120th Street & 137th Avenue
Miami, Dade County, Florida
February 23, 1971

INTRODUCTION

The Camp Matecumbe Sewage Treatment Plant was inspected and sampled on December 9, 1970 by Kenneth Schang and Joe Hopson (Dade County Pollution Control Inspector). Grab samples of the influent and effluent were obtained. The treatment plant is a Defiance Extended Aeration package unit with the effluent discharged to open sand filters. The inspection was conducted in conjunction with Mr. Raul Pugar, who maintains the system.

SUMMARY AND CONCLUSIONS

Treatment efficiency exceeded 90% for all parameters evaluated except settleable solids where 80% removal was attained. However, the effluent concentration was only .1 ml/l.

The BOD effluent concentration was 7.2 mg/l.

The effluent is not chlorinated prior to discharge to the open sand filters.

INVENTORY

1. Comminutor.

2. Aeration tanks; diffused air.

3. Secondary sedimentation.

4. Dosing tank.

5. Open sand filters.

6. Sludge holding tank, with sludge hauled away when required.

RESULTS

The BOD_5, COD and TOC effluent concentrations were 7.2, 24 and 9 mg/l respectively.

An 80% removal efficiency for settleable solids produced approximately .1 ml/l in the effluent.

Nitrogen concentrations were all insignificant except nitrate-nitrite as N, which was measured at 13.8 mg/l. This high level indicates low flow into the plant and a resulting longer detention which increases nitrification.

Total nitrogen and phosphorus effluent concentrations were 1.1 and 3.8 mg/l respectively.

DISCUSSION

A valid discussion of plant operation and efficiency is difficult considering the extremely low flow entering the treatment plant within several weeks prior to sampling. Conversation with the operator produced an estimate that the system may be operating as much as three-quarters below the design flow. Visually, the aeration tank solids appeared to have good color and were of adequate concentration to effect good treatment efficiency. A more critical evaluation should be prepared when the facility is nearer design population.

The operator, Mr. Raul Pugar, is not certified as a treatment plant operator.

A flow meter should be installed.

Kenneth Schang

LOWER FLORIDA ESTUARY STUDY
DADE COUNTY WASTE SOURCE INVENTORY
TREATMENT PLANT – GENERAL INFORMATION

DATE OF VISIT 12-9-70
PLANT NAME: CAMP MATECUMBE - BOYS TOWN
PLANT OWNER: BOY'S TOWN
ADDRESS S.W. 120 STREET & 137 AVENUE
TELEPHONE 235-9251
COLLECTION SYSTEM – TYPE: SERVES SCHOOL - DORMITORY COMPLEX
OWNER: BOY'S TOWN
ADDRESS: S.W. 120 STREET & 137 AVENUE
TELEPHONE 235-9251

DESIGN AVERAGE DESIGN FLOW: .035 MGD YEAR COMPLETED: 1962
STREAM FLOW NA cfs | DURATION NA days FREQUENCY NA Yrs
CONSTRUCTION COST NOT KNOWN
POPULATION SERVED 70 ± PEOPLE

OPERATION ANNUAL COST NOT KNOWN
PERSONNEL RAUL PUGAR
LEVEL OF CERTIFICATION NONE
CONDITION OF EQUIPMENT GOOD

OUTFALL TYPE NOT APPLICABLE SIZE NOT APPLICABLE LENGTH NOT APPLICABLE
DISCHARGED TO: SAND FILTER - SEPTIC WATER COURSE MILEAGE: NOT APPLICABLE
LATITUDE LONGITUDE

TREATMENT (LIST UNITS IN ORDER, EXCLUDING SLUDGE TREATMENT & DISPOSAL)
COMMINUTOR, AERATION TANK, SECONDARY SEDIMENTATION, DOSING TANK,
DRAINFIELD (OPEN SAND FILTER)
EXTENDED AERATION - OXIDATION

SLUDGE TREATMENT AEROBIC - DIGESTION - SLUDGE HOLDING TANK

DISPOSAL TRUCKED AWAY

REMARKS LOW LOADING RATE - BOD & HYDRAULIC
CLEAR EFFLUENT

PREPARED BY: KW Schang

Sheet 2 of 3

LOWER FLORIDA ESTUARY STUDY
DADE COUNTY WASTE SOURCE INVENTORY
TREATMENT PLANT FIELD SHEET

PLANT CAMP MATECUMBE - BOY'S TOWN

							AVERAGE
DATE ON		12-9-70					
TIME ON		2:00					
DATE OFF		12-9-70					
TIME OFF		2:45					
FLOW	START	No FLOW					
	END	METER					
	TOTAL						
	24 hr. Flow Rate						
INF.	TEMP. ON	27°C	SAMPLE AT	2:30			
	PH - ON	–					
EFFLUENT	TEMP - ON	27°C	SAMPLED AT	2:25			
	PH - ON						
	Cl. Residual	No CHLORINATION					
	CHLORINE-ON						
	CHLORINE-OFF						
	ON-OFF-lbs						

DATE	WASTE CHARACTERISTICS	PLANT OPERATION	AUTO. SAMPLER OPERATION	SAMPLES COLLECTED BY
12-9-70		GOOD - CLEAR EFFLUENT	–	SCHANG

LOWER FLORIDA ESTUARY STUDY
DADE COUNTY WASTE SOURCE INVENTORY
TREATMENT PLANT – SCHEMATIC DIAGRAM

PLANT Camp Matecumbe - Boy's Town

DRAW COMPLETE FLOW DIAGRAM OF TREATMENT PLANT AND OUTFALL. LABEL EACH UNIT. SHOW LOCATIONS OF SAMPLE COLLECTION AND FLOW MEASURING DEVICES

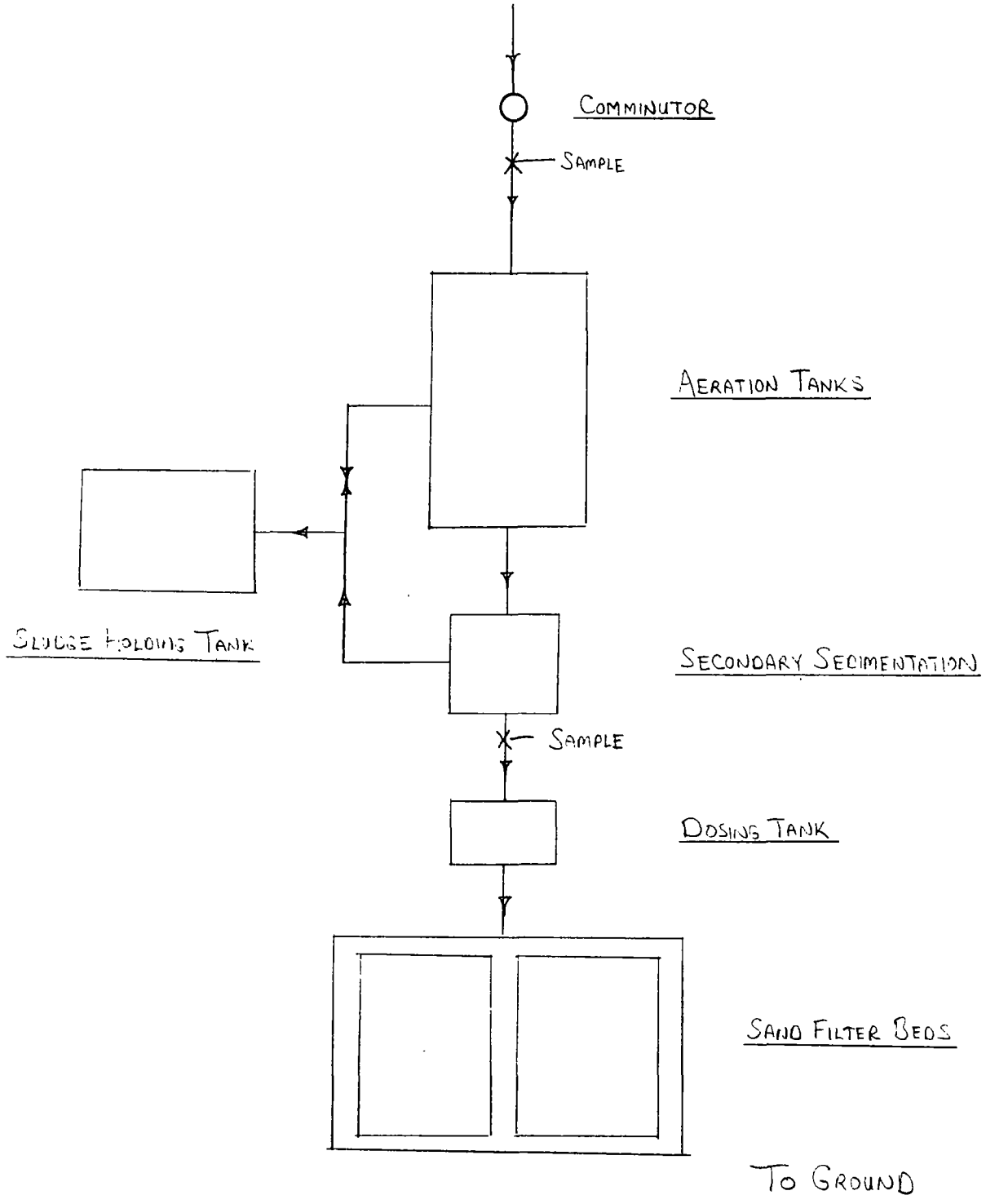

PREPARED BY: KW Schang

Sheet ___ of _____

LOWER FLORIDA ESTUARY STUDY
DADE COUNTY WASTE SOURCE INVENTORY
INFLUENT – EFFLUENT – DATA SUMMARY

PLANT Boys Town

							AVERAGE
DATE - OFF		12/9					
FLOW - MGD		.035					
5 DAY B O D mg/l	INFLUENT	129.8					
	EFFLUENT	7.2					
	IN - OUT	122.6					
	% REMOVAL	94.5					
	LOAD-lbs/day	2.1					
C O D mg/l	INFLUENT	572					
	EFFLUENT	24					
	IN - OUT	548					
	% REMOVAL	95.8					
	LOAD -lbs/day	7					
T S S mg/l	INFLUENT	104					
	EFFLUENT	10					
	IN - OUT	94					
	% REMOVAL	90.4					
	LOAD- lbs/day	2.9					
V S S mg/l	INFLUENT	84					
	EFFLUENT	8					
	IN - OUT	76					
	% REMOVAL	90.5					
	LOAD –lbs/day	2.34					
Settlable Solids ml/l	INFLUENT	.5					
	EFFLUENT	.1					
	IN - OUT	.4					
	% REMOVAL	80.0					
T O C mg/l	INFLUENT	92.5					
	EFFLUENT	9					
	IN - OUT	83.5					
	% REMOVAL	90.3					
	LOAD - lbs/day	2.63					

INFLUENT BOD POPULATION EQUIVALENT = 217

.FFLUENT BOD POPULATION EQUIVALENT = 12

LOAD = FLOW (MGD) x EFFLUENT (mg/l) x 8.34 = lbs/day

Note: Load based on design flow = .035 MGD

From The Desk Of Michael V. Polito

LOWER FLORIDA ESTUARY STUDY
DADE COUNTY WASTE SOURCE INVENTORY
EFFLUENT DATA SUMMARY

Sheet____ of____

PLANT Boys Town

							AVERAGE or MEDIAN*
DATE - OFF		12/9					
FLOW - MGD		.035					
KTELDAHL NITROGEN as N	CONC.-mg/l	1.1					
	LOAD-lbs/day	.32					
AMMONIA NITROGEN as N	CONC.-mg/l	0.4					
	LOAD-lbs/day	.12					
ORGANIC NITROGEN as N	CONC.-mg/l	0.7					
	LOAD-lbs/day	.2					
NO_2 -NO_3 as N	CONC.-mg/l	13.8					
	LOAD-lbs/day	4.03					
TOTAL PHOSPHORUS AS P	CONC.-mg/l	3.8					
	LOAD-lbs/day	1.11					
CHLORIDE	CONC.-mg/l	40					
TOTAL COLIFORM	CONC - MPN/100ml						
Fecal COLIFORM	CONC - MPN/100ml						

*Calculate Median for Total & Fecal Coliform Concentrations and Average for All Other Parameters.

Note: Load based on design flow = 0.035 MGD.

Lower Florida Estuary Study
Operation Report on
Casa Granada Apartments Sewage Treatment Plant
S.W. 87th Avenue & 141st Street
Miami, Dade County, Florida
January 25, 1971

INTRODUCTION

The Casa Granada Sewage Treatment Plant was inspected and sampled on December 10, 1970, by Kenneth Schang. Grab samples of the influent and effluent after chlorination were obtained. The treatment plant is a contact stabilization package unit with Jetflo tertiary filters and discharge to the C-100 canal. Initial contact was made through James Barlow, plant operator.

SUMMARY AND CONCLUSIONS

A treatment efficiency of 96.4% with respect to BOD_5 removal produced an effluent concentration of 6.4 mg/l.

No settleable solids were measured in the effluent and removal of suspended solids was 97.1%.

The chlorine residual of 3 mg/l should effect a successful bacteriological kill.

Flow measuring device should be installed.

INVENTORY

1. Comminutor.
2. Aeration tank, diffused air system.
3. Secondary sedimentation.
4. Equalizing tank.
5. Filtration + chlorination.
6. Dosing tank.
7. Reaeration tank, contact stabilization process.
8. Aerobic digester, sludge hauled away.

RESULTS

BOD_5, COD and TOC effluent values equalled 6.4, 26, and 22.5 mg/l.

Suspended solids removal efficiency was 97.1% and settleable solids were reduced 100% from an influent concentration of 3 ml/l.

Chlorine residual was measured at 3 ppm in the dosing tank prior to discharge to C-100 canal.

Since there was no flow meter on the plant, it is not possible to compute actual loading rates. Approximate loadings based on design flow of 0.02 MGD are shown in the attached calculation table.

DISCUSSION

The Casa Granada Sewage Treatment Plant at the time of inspection was producing an excellent effluent with excellent removal efficiencies.

Mr. James Barlow and Mr. Bud Rollins, operators, are licensed class "C".

Kenneth Schang

LOWER FLORIDA ESTUARY STUDY
DADE COUNTY WASTE SOURCE INVENTORY
TREATMENT PLANT – GENERAL INFORMATION

DATE OF VISIT 12-10-70
PLANT NAME: CASA GRANADA APARTMENTS
PLANT OWNER: CASA GRANADA APARTMENTS
ADDRESS S.W. 87 AVENUE AND 141 STREET
TELEPHONE
COLLECTION SYSTEM – TYPE: SERVES APARTMENT COMPLEX
OWNER: CASA GRANADA APARTMENTS
ADDRESS: S.W. 87 AVENUE AND 141 STREET
TELEPHONE

DESIGN AVERAGE DESIGN FLOW: .02 MGD YEAR COMPLETED: 1968
STREAM FLOW cfs DURATION days FREQUENCY Yrs
CONSTRUCTION COST $50,000
POPULATION SERVED 87 UNITS

OPERATION ANNUAL COST $1,000
PERSONNEL JAMES BARLOW AND BUD ROLLINS
LEVEL OF CERTIFICATION CLASS "C" OPERATOR
CONDITION OF EQUIPMENT GOOD

OUTFALL TYPE GRAVITY SIZE 6 INCH LENGTH 75 FEET
DISCHARGED TO: C-100 CANAL WATER COURSE MILEAGE:
LATITUDE LONGITUDE

TREATMENT (LIST UNITS IN ORDER, EXCLUDING SLUDGE TREATMENT & DISPOSAL)
CONTACT STABILIZATION
SEDIMENTATION, AERATION TANK, SECONDARY SEDIMENTATION, REAERATION, EQUALIZING TANK,
JETFLOW FILTERS + CHLORINATION, CLOSING TANK, CANAL

SLUDGE TREATMENT AEROBIC DIGESTION

DISPOSAL TRUCKED AWAY

REMARKS

PREPARED BY: KW Schang

LOWER FLORIDA ESTUARY STUDY
DADE COUNTY WASTE SOURCE INVENTORY
TREATMENT PLANT FIELD SHEET

PLANT CASA GRANADA

							AVERAGE
DATE ON		12-10-70					
TIME ON		11:00					
DATE OFF		12-10-70					
TIME OFF		11:30					
FLOW	START	NO FLOW					
	END	NO FLOW METER					
	TOTAL						
	24 hr. Flow Rate						
INF.	TEMP. ON	87°	SAMPLED AT	11:20			
	PH - ON	—					
EFFLUENT	TEMP - ON	87°	SAMPLED AT	11:25			
	PH - ON	—					
	Cl. Residual	3 PPM					
	CHLORINE-ON						
	CHLORINE-OFF						
	ON-OFF-lbs						

DATE	WASTE CHARACTERISTICS	PLANT OPERATION	AUTO. SAMPLER OPERATION	SAMPLES COLLECTED BY
12-10-70		GOOD CLEAR EFFLUENT	—	SCHANG

LOWER FLORIDA ESTUARY STUDY
DADE COUNTY WASTE SOURCE INVENTORY
TREATMENT PLANT – SCHEMATIC DIAGRAM

PLANT CASA GRANADA APARTMENTS

DRAW COMPLETE FLOW DIAGRAM OF TREATMENT PLANT AND OUTFALL. LABEL EACH UNIT. SHOW LOCATIONS OF SAMPLE COLLECTION AND FLOW MEASURING DEVICES

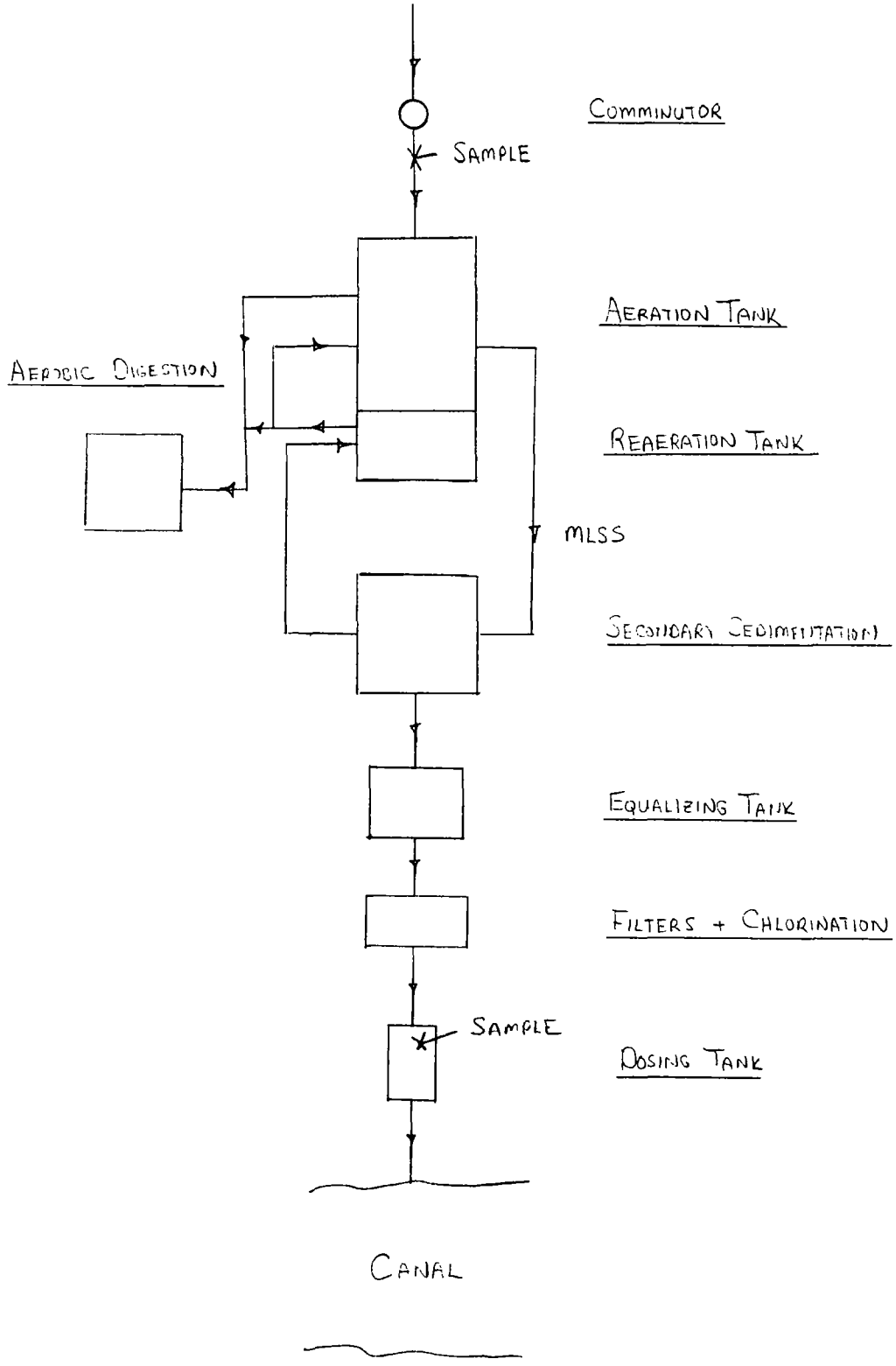

PREPARED BY: KW Schang

Sheet ___ of _____

LOWER FLORIDA ESTUARY STUDY
DADE COUNTY WASTE SOURCE INVENTORY
INFLUENT – EFFLUENT – DATA SUMMARY

PLANT Casa Granada

							AVERAGE
DATE - OFF		12/10/70					
FLOW - MGD		.02					
5 DAY B O D mg/l	INFLUENT	179					
	EFFLUENT	6.4					
	IN - OUT	172.6					
	% REMOVAL	96.4					
	LOAD-lbs/day	1.07					
C O D mg/l	INFLUENT	565					
	EFFLUENT	26					
	IN - OUT	539					
	% REMOVAL	95.4					
	LOAD -lbs/day	4.34					
T S S mg/l	INFLUENT	208					
	EFFLUENT	6					
	IN - OUT	202					
	% REMOVAL	97.1					
	LOAD- lbs/day	1					
V S S mg/l	INFLUENT	176					
	EFFLUENT	2					
	IN - OUT	174					
	% REMOVAL	98.9					
	LOAD –lbs/day	.33					
Settlable Solids ml/l	INFLUENT	3					
	EFFLUENT	nil					
	IN - OUT	3					
	% REMOVAL	100					
T O C mg/l	INFLUENT	95					
	EFFLUENT	22.5					
	IN - OUT	72.5					
	% REMOVAL	76.3					
	LOAD - lbs/day	3.75					

INFLUENT BOD POPULATION EQUIVALENT = 168

EFFLUENT BOD POPULATION EQUIVALENT = 6

LOAD = FLOW (MGD) x EFFLUENT (mg/l) x 8.34 = lbs/day

Note: Loading based on design flow

From The Desk Of
Michael V. Pallito

LOWER FLORIDA ESTUARY STUDY
DADE COUNTY WASTE SOURCE INVENTORY
EFFLUENT DATA SUMMARY

Sheet____ of_____

PLANT Casa Granada

							AVERAGE or MEDIAN*
DATE - OFF		12/10					
FLOW - MGD		.02					
KTELDAHL NITROGEN as N	CONC.-mg/l	~~0.8~~					
	LOAD-lbs/day	—					
AMMONIA NITROGEN as N	CONC.-mg/l	1.8					
	LOAD-lbs/day	.3					
ORGANIC NITROGEN as N	CONC.-mg/l						
	LOAD-lbs/day						
NO_2 -NO_3 as N	CONC.-mg/l	4.8					
	LOAD-lbs/day	.8					
TOTAL PHOSPHORUS AS P	CONC.-mg/l	8.0					
	LOAD-lbs/day	1.33					
CHLORIDE	CONC.-mg/l	86					
TOTAL COLIFORM	CONC - MPN/100ml						
Fecal COLIFORM	CONC - MPN/100ml						

*Calculate Median for Total & Fecal Coliform Concentrations and Average for All Other Parameters.

* result to low to be valid.

Note. Loading based on design flow.

Lower Florida Estuary Study
Report on Waterborne Wastes from
Coast Guard Station Sewage Treatment Plant
100 McArthur Causeway
Miami, Dade County, Florida
March 19, 1971

INTRODUCTION

The Coast Guard Station Sewage Treatment Plant was inspected and sampled by Kenneth Schang on January 14, 1971. Grab samples of the influent and effluent after chlorination were obtained. The treatment plant utilizes the extended aeration process with chlorination prior to discharge to Government Cut and is designed to treat 10,000 GPD. The inspection was conducted in conjunction with Mr. James Campbell, who operates the system.

SUMMARY AND CONCLUSIONS

Removal of BOD approached 98% with concentrations of 390 and 8 mg/l respectively in the influent and effluent.

An influent settleable solids level of 2.5 ml/l was reduced to 0 ml/l in the effluent.

A chlorine residual of 1 ppm was measured in the chlorine contact chamber immediately prior to discharge.

INVENTORY

1. Comminutor.
2. Aeration tank, diffused air system.
3. Secondary sedimentation.
4. Chlorine contact tank.
5. Aerobic sludge holding tank, diffused air system.

RESULTS

BOD, COD and TOC effluent loadings were 0.96, 10.57 and 2.88 lbs. per day calculated from the 14,400 GPD flow registered by a flow meter during the inspection.

Total suspended solids removal was inadequate with an effluent concentration of 112 mg/l indicated a removal efficiency of 28.2% and a loading of 13.45 lbs. per day. Settleable solids were reduced to 0 ml/l in the effluent.

Loadings for ammonia nitrogen, nitrate-nitrite as N, and total phosphorus were 0.22, 1.18 and 1.45 lbs. per day respectively based on effluent concentrations of 1.8, 9.8 and 12.1 mg/l respectively. Organic nitrogen was discharged at 1.7 mg/l for a load of 0.2 lbs. per day.

DISCUSSION

Two recommendations followed the visual inspection:

1. The quantity of dissolved oxygen present in the aeration tank and aerobic digester should be measured; the color of the solids in both tanks were extremely dark indicating these treatment processes may need more air.

2. This plant is overloaded. An additional large tank is being constructed to be used as an aerobic sludge holding tank so that the plant can be converted from extended aeration to contact stabilization.

Plant operation was supervised by Mr. James Campbell, who, through the grandfather clause, is near licensing for operation of extended aeration treatment plants.

Kenneth Schang

LOWER FLORIDA ESTUARY STUDY
DADE COUNTY WASTE SOURCE INVENTORY
TREATMENT PLANT – GENERAL INFORMATION

DATE OF VISIT 1-14-71
PLANT NAME: COAST GUARD STATION
PLANT OWNER: COAST GUARD STATION
ADDRESS 100 MCARTHUR CAUSEWAY
TELEPHONE 672-2021
COLLECTION SYSTEM – TYPE: SERVES COAST GUARD STATION
OWNER: U.S COAST GUARD
ADDRESS: 100 MCARTHUR CAUSEWAY
TELEPHONE 672-2021

DESIGN AVERAGE DESIGN FLOW: 10,000 GPD ~~MGD~~ YEAR COMPLETED: 1963
STREAM FLOW — cfs | DURATION — days FREQUENCY — Yrs
CONSTRUCTION COST NOT KNOWN
POPULATION SERVED 200 PEOPLE

OPERATION ANNUAL COST 4000 PER YEAR
PERSONNEL JIM [illegible]
LEVEL OF CERTIFICATION GRANDFATHER CLAUSE - EXTENDED AERATION PLANTS
CONDITION OF EQUIPMENT GOOD

OUTFALL TYPE GRAVITY SIZE 10 INCH LENGTH 100 FEET
DISCHARGED TO: GOVERNMENT CUT WATER COURSE MILEAGE: —
LATITUDE 25°47' LONGITUDE —

TREATMENT (LIST UNITS IN ORDER, EXCLUDING SLUDGE TREATMENT & DISPOSAL)
COMMINUTOR, EQUALIZATION TANK, CLARIFIER, CHLORINE INJECT, OUTFALL

SLUDGE TREATMENT AEROBIC HOLDING TANK

DISPOSAL TRUCKED AWAY

REMARKS PLANT IS AT PRESENT OVERLOADED. AN ADDITIONAL TANK IS BEING CONSTRUCTED AND THE PLAN IS TO CONVERT THE PRESENT EXTENDED AERATION SYSTEM TO CONTACT STABILIZATION.

PREPARED BY: KW Chang

LOWER FLORIDA ESTUARY STUDY
DADE COUNTY WASTE SOURCE INVENTORY
TREATMENT PLANT FIELD SHEET

Sheet 2 of 3

PLANT COAST GUARD STATION

							AVERAGE
DATE ON		1-14-71					
TIME ON		10:30					
DATE OFF		1-14-71					
TIME OFF		11:30					
FLOW	START	10 GPM	(PEAKS UP TO	30 GPM PREVIOUSLY)			
	END	[illegible] GPD					
	TOTAL						
	24 hr. Flow Rate						
INF.	TEMP. ON	36°					
	PH - ON	–					
EFFLUENT	TEMP - ON	32°					
	PH - ON	–					
	Cl. Residual	1 PPM					
	CHLORINE-ON						
	CHLORINE-OFF						
	ON-OFF-lbs						

DATE	WASTE CHARACTERISTICS	PLANT OPERATION	AUTO. SAMPLER OPERATION	SAMPLES COLLECTED BY
1-14-71	AVERAGE	OVERLOADED OPERATION GOOD	–	SCHANG.

LOWER FLORIDA ESTUARY STUDY
DADE COUNTY WASTE SOURCE INVENTORY
TREATMENT PLANT – SCHEMATIC DIAGRAM

PLANT COAST GUARD STATION

DRAW COMPLETE FLOW DIAGRAM OF TREATMENT PLANT AND OUTFALL. LABEL EACH UNIT. SHOW LOCATIONS OF SAMPLE COLLECTION AND FLOW MEASURING DEVICES

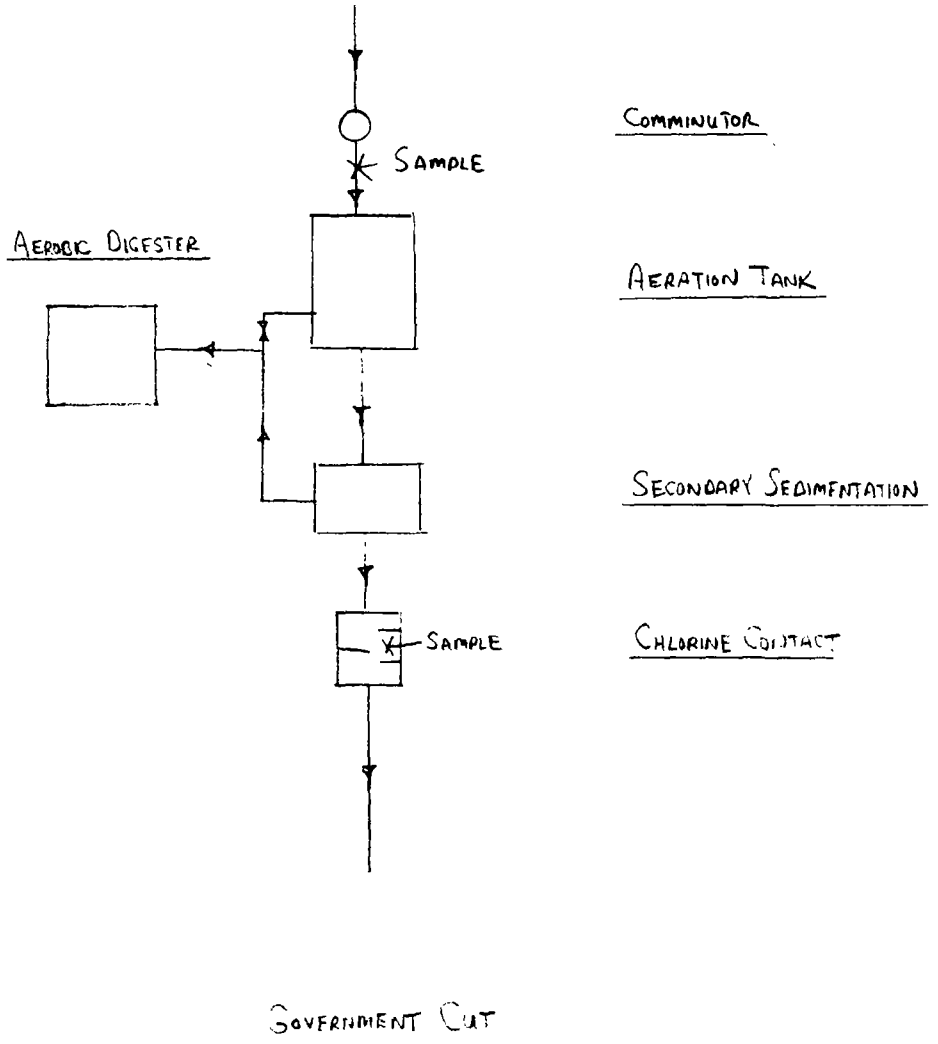

EXTENDED AERATION

PREPARED BY: KW Schang

LOWER FLORIDA ESTUARY STUDY

Sheet ___ of _____

DADE COUNTY WASTE SOURCE INVENTORY

INFLUENT – EFFLUENT – DATA SUMMARY

PLANT Coast Guard

							AVERAGE
DATE - OFF		1/14/71					
FLOW - MGD		0.0144					
5 DAY B O D mg/l	INFLUENT	390					
	EFFLUENT	8					
	IN - OUT						
	% REMOVAL	97.9					
	LOAD-lbs/day	.96					
C O D mg/l	INFLUENT	630					
	EFFLUENT	88					
	IN - OUT						
	% REMOVAL	86.0					
	LOAD -lbs/day	10.57					
T S S mg/l	INFLUENT	156					
	EFFLUENT	112					
	IN - OUT						
	% REMOVAL	28.2					
	LOAD- lbs/day	13.45					
V S S mg/l	INFLUENT	138					
	EFFLUENT	92					
	IN - OUT						
	% REMOVAL	33.3					
	LOAD –lbs/day	11.05					
Settlable Solids ml/l	INFLUENT	2.5					
	EFFLUENT	0					
	IN - OUT						
	% REMOVAL	100					
T O C mg/l	INFLUENT	154					
	EFFLUENT	24					
	IN - OUT						
	% REMOVAL	84.4					
	LOAD - lbs/day	2.88					

INFLUENT BOD POPULATION EQUIVALENT = 3.6

EFFLUENT BOD POPULATION EQUIVALENT = .6

LOAD = FLOW (MGD) x EFFLUENT (mg/l) x 8.34 = lbs/day

Released

From The Desk Of
Michael V. Polito MP

LOWER FLORIDA ESTUARY STUDY
DADE COUNTY WASTE SOURCE INVENTORY
EFFLUENT DATA SUMMARY

Sheet____ of_____

PLANT Coact Guard

							AVERAGE or MEDIAN*
DATE - OFF		1/14/71					
FLOW - MGD		.0144					
KTELDAHL NITROGEN as N	CONC.-mg/l	3.5					
	LOAD-lbs/day	.42					
AMMONIA NITROGEN as N	CONC.-mg/l	1.8					
	LOAD-lbs/day	.22					
ORGANIC NITROGEN as N	CONC.-mg/l	1.7					
	LOAD-lbs/day	.2					
NO_2 -NO_3 as N	CONC.-mg/l	9.8					
	LOAD-lbs/day	1.18					
TOTAL PHOSPHORUS A S P	CONC.-mg/l	12.1					
	LOAD-lbs/day	1.45					
CHLORIDE	CONC.-mg/l	83					
TOTAL COLIFORM	CONC - MPN/100ml						
Fecal COLIFORM	CONC - MPN/100ml						

*Calculate Median for Total & Fecal Coliform Concentrations and Average for All Other Parameters.

Lower Florida Estuary Study
Operation Report on
Country Club Garden Apartments Sewage Treatment Plant
N.W. 79th Avenue and 41st Street
Medley, Dade County, Florida
March 16, 1971

INTRODUCTION

The Country Club Garden Apartments Sewage Treatment Plant was inspected and sampled on January 15, 1971 by Kenneth Schang. Grab samples of the influent and effluent after chlorination were obtained. The treatment plant consists of two .07 MGD capacity Davco Contact Stabilization package units in parallel with tertiary filtration and chlorination prior to discharge to a private lake. Only one plant was in operation at the time of inspection due to low loading conditions. Initial contact was made through Mr. Pullam of Environmental Consultants, plant operator.

SUMMARY AND CONCLUSIONS

An influent BOD_5 of 251 mg/l was reduced to 3.8 mg/l for a removal efficiency of 98.5%.

Settleable solids were reduced 100% from the influent level of 2.5 mg/l. Total suspended solids removal efficiency was 86.4%.

The chlorine residual measured in the final effluent equalled 2 ppm.

INVENTORY

1. Comminutor.
2. Inlet bar screen.
3. Contact tank; diffused air system.
4. Secondary sedimentation.
5. Stabilization; diffused air system.
6. Equalizing tank plus chlorination.
7. Tertiary filters.
8. Aerobic digester; diffused air system.

RESULTS

Removal efficiencies for BOD_5, COD and TOC were calculated as 98.5, 94.6 and 91.9%, producing effluent discharges of .63, 5.84 and 2.17 lbs. per day based on the actual flow at the time of inspection of .02 MGD.

Total suspended solids removal was 86.4% with 27 mg/l in the effluent and a 4.5 lbs. per day loading. Settleable solids were reduced from 2.5 ml/l to zero ml/l in the effluent.

Organic nitrogen, nitrate-nitrite nitrogen and total phosphorus loadings were .27, 1.3 and .92 lbs. per day. The high nitrate-nitrite as N value is most probably due to the high detention time induced by the low flow conditions.

DISCUSSION'

The overall plant operation appeared to be above adequate with excellent removal efficiencies. One minor consideration is the

effluent suspended solids concentration of 27 mg/l. With tertiary filtration this value should be somewhat lower. An evaluation of filter efficiency is recommended.

Mr. Pullam, plant operator, is licensed class "C".

Kenneth Schang

LOWER FLORIDA ESTUARY STUDY
DADE COUNTY WASTE SOURCE INVENTORY
TREATMENT PLANT – GENERAL INFORMATION

DATE OF VISIT 1-15-71
PLANT NAME: COUNTRY CLUB GARDEN APARTMENTS
PLANT OWNER: COUNTRY CLUB GARDEN APARTMENTS
ADDRESS N.W. 79 AVENUE AND 41 STREET
TELEPHONE —
COLLECTION SYSTEM – TYPE: SERVES APARTMENT COMPLEX
OWNER: COUNTRY CLUB GARDEN APARTMENTS
ADDRESS: N.W. 79 AVENUE AND 41 STREET
TELEPHONE —

DESIGN | AVERAGE DESIGN FLOW: .14 MGD YEAR COMPLETED: 1970
STREAM FLOW — cfs | DURATION — days FREQUENCY — Yrs
CONSTRUCTION COST 180,000
POPULATION SERVED 1520 PERSONS ULTIMATELY

OPERATION | ANNUAL COST NOT DETERMINABLE
PERSONNEL ENVIRONMENTAL CONSULTANTS MR. PULLAM
LEVEL OF CERTIFICATION CLASS "C" OPERATOR
CONDITION OF EQUIPMENT NEW PLANT
OUTFALL | TYPE GRAVITY SIZE – LENGTH –
DISCHARGED TO: PRIVATE LAKE WATER COURSE MILEAGE: –
LATITUDE – LONGITUDE –
TREATMENT | (LIST UNITS IN ORDER, EXCLUDING SLUDGE TREATMENT & DISPOSAL)
COMMINUTOR, INLET GAR SCREEN, CONTACT TANK, SECONDARY SEDIMENTATION, STABILIZATION TANK, EQUALIZING TANK
PH CONDITIONING, TERTIARY FILTERS, CANAL

DAVCO - CONTACT STABILIZATION

SLUDGE | TREATMENT AEROBIC DIGESTER

DISPOSAL TRUCKED AWAY

REMARKS | ONLY ONE PLANT IN OPERATION

PREPARED BY: KW Schang

LOWER FLORIDA ESTUARY STUDY
DADE COUNTY WASTE SOURCE INVENTORY
TREATMENT PLANT FIELD SHEET

PLANT Country Club Gardens Apartment

							AVERAGE
DATE ON		1-15-71					
TIME ON		11:15					
DATE OFF		1-15-71					
TIME OFF		12:00					
FLOW	START	20,000 GPD					
	END						
	TOTAL						
	24 hr. Flow Rate						
INF.	TEMP. ON	82° F					
	PH - ON	-					
EFFLUENT	TEMP - ON	78° F					
	PH - ON	-					
	Cl. Residual	2 PPM					
	CHLORINE-ON						
	CHLORINE-OFF						
	ON-OFF-lbs						

DATE	WASTE CHARACTERISTICS	PLANT OPERATION	AUTO. SAMPLER OPERATION	SAMPLES COLLECTED BY
1-15-71	Average	Good - Clear Effluent	-	Schang

LOWER FLORIDA ESTUARY STUDY
DADE COUNTY WASTE SOURCE INVENTORY
TREATMENT PLANT -- SCHEMATIC DIAGRAM

PLANT COUNTRY CLUB GARDENS APARTMENTS

DRAW COMPLETE FLOW DIAGRAM OF TREATMENT PLANT AND OUTFALL. LABEL EACH UNIT. SHOW LOCATIONS OF SAMPLE COLLECTION AND FLOW MEASURING DEVICES

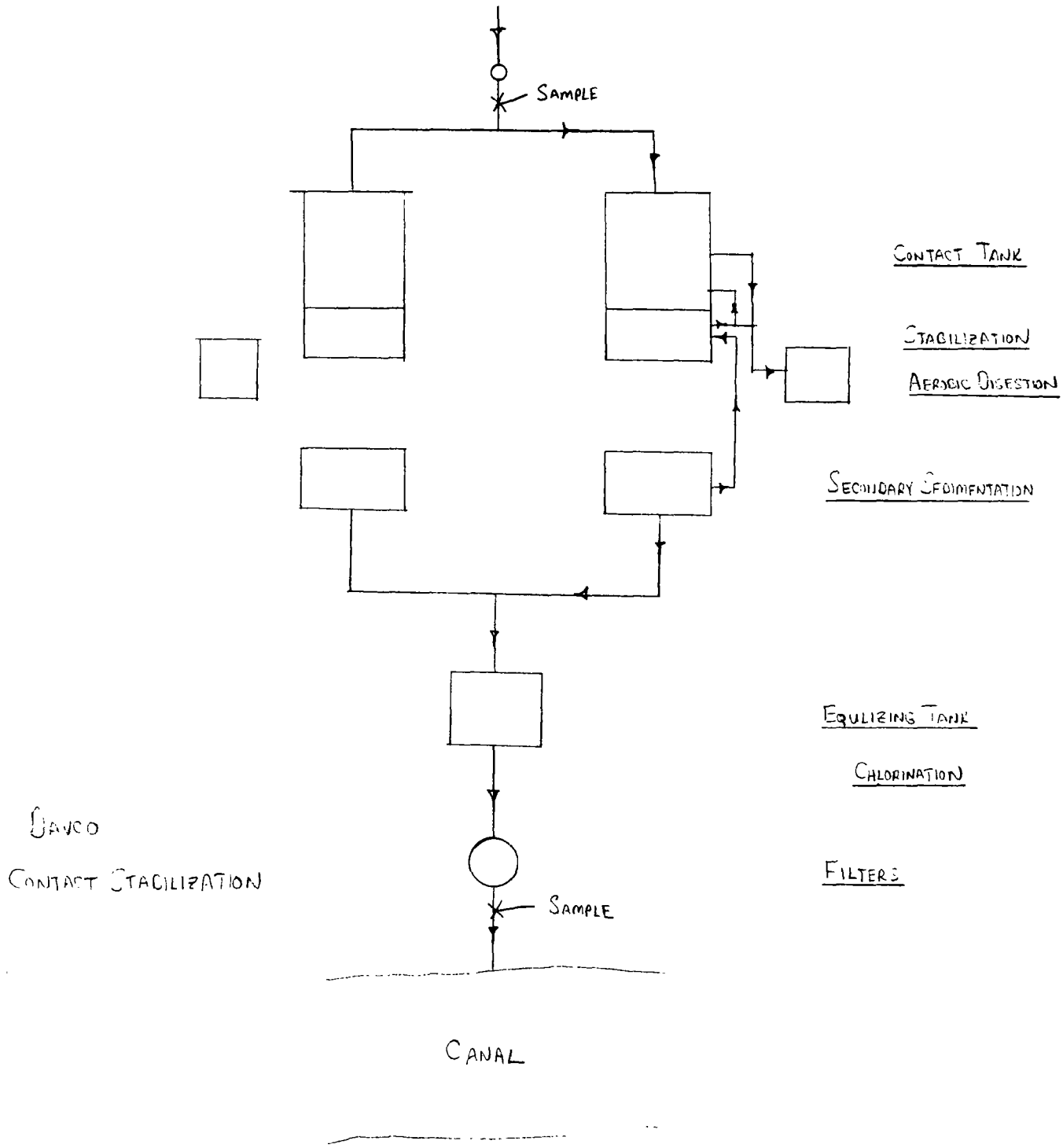

PREPARED BY: KW Schang

LOWER FLORIDA ESTUARY STUDY
DADE COUNTY WASTE SOURCE INVENTORY
INFLUENT – EFFLUENT – DATA SUMMARY

Sheet ___ of ___

PLANT Country Club Gardens

								AVERAGE
DATE - OFF		1/15/71						
FLOW - MGD		.02						
5 DAY B O D mg/l	INFLUENT	25						
	EFFLUENT	3.8						
	IN - OUT							
	% REMOVAL	98.5						
	LOAD-lbs/day	.03						
C O D mg/l	INFLUENT	648						
	EFFLUENT	35						
	IN - OUT							
	% REMOVAL	94.6						
	LOAD -lbs/day	5.84						
T S S mg/l	INFLUENT	198						
	EFFLUENT	27						
	IN - OUT							
	% REMOVAL	86.4						
	LOAD- lbs/day	1.5						
V S S mg/l	INFLUENT	126						
	EFFLUENT	20						
	IN - OUT							
	% REMOVAL	84.1						
	LOAD –lbs/day	3.04						
Settlable Solids ml/l	INFLUENT	2.5						
	EFFLUENT	0.0						
	IN - OUT							
	% REMOVAL	100						
T O C mg/l	INFLUENT	160						
	EFFLUENT	13						
	IN - OUT							
	% REMOVAL	91.9						
	LOAD - lbs/day	2.17						

INFLUENT BOD POPULATION EQUIVALENT = 846 11.87

EFFLUENT BOD POPULATION EQUIVALENT = 1 .03

LOAD = FLOW (MGD) x EFFLUENT (mg/l) x 8.34 = lbs/day

Released
From The Desk Of
Michael V. Politano

Sheet____ of_____

LOWER FLORIDA ESTUARY STUDY
DADE COUNTY WASTE SOURCE INVENTORY
EFFLUENT DATA SUMMARY

PLANT Country Club Gardens

							AVERAGE or MEDIAN*
DATE - OFF		1/15/71					
FLOW - MGD		.02					
KTELDAHL NITROGEN as N	CONC.-mg/l	2.1					
	LOAD-lbs/day	.35					
AMMONIA NITROGEN as N	CONC.-mg/l	0.5					
	LOAD-lbs/day	.083					
ORGANIC NITROGEN as N	CONC.-mg/l	1.6					
	LOAD-lbs/day	.267					
NO_2 -NO_3 as N	CONC.-mg/l	7.8					
	LOAD-lbs/day	1.3					
TOTAL PHOSPHORUS AS P	CONC.-mg/l	5.5					
	LOAD-lbs/day	.92					
CHLORIDE	CONC.-mg/l	58					
TOTAL COLIFORM	CONC - MPN/100ml						
Fecal COLIFORM	CONC - MPN/100ml						

*Calculate Median for Total & Fecal Coliform Concentrations and Average for All Other Parameters.

Lower Florida Estuary Study
Report on Waterborne Wastes from
Dade Christian Schools Sewage Treatment Plant
6601 N.W. 167th Street
Miami, Dade County, Florida
February 23, 1971

INTRODUCTION

The Dade Christian Schools Sewage Treatment Plant was inspected and sampled on December 1, 1970 by Kenneth Schang and Frank Ansley (Dade County Pollution Control Inspector). Grab samples of the influent and effluent after chlorination were obtained. The treatment plant is a Pollution Control Extended Aeration package treatment unit with a Graver filter and chlorination prior to discharge to the 205th Street Canal. The inspection was conducted in conjunction with Mr. Bill Matthews, who operates the system.

SUMMARY AND CONCLUSIONS

Although removal of settleable solids was evaluated as 100%, the efficiency of treatment with respect to BOD_5 was only 69.1%. This produced an effluent concentration of 42 mg/l with 5.25 lbs. per day being discharged, based on the average daily flow of 15,000 gallons. This is a new plant and a low rate solids buildup in the aeration tank has dreastically reduced the treatment efficiency.

The chlorine residual was measured at .5 ppm.

INVENTORY

1. Bar rack, at influent to aeration tank.
2. Aeration tank, diffused air system.
3. Secondary sedimentation.
4. Graver filter.
5. Chlorination.
6. Aerobic digester, diffused air.

RESULTS

Removal of BOD_5, COD and TOC was 69.1, 79.1 and 75.5% respectively leaving effluent concentrations of 42, 120, and 27 mg/l with 5.25, 15.01 and 3.38 lbs. per day being discharged based on the average daily flow of 15,000 gallons.

Total suspended solids were measured at 13 mg/l signifying a 1.63 lb. per day discharge in the effluent. The influent level for settleable solids (.3 ml/l) was totally removed.

Nutrient loadings were significant in that 136 mg/l of nitrate-nitrite nitrogen was present in the effluent sample. This is a 17.01 lbs. per day discharge and indicates the extremely long detention time inherent to this plant due to low flow. Ammonia nitrogen discharge was somewhat less at 1.00 lbs. per day, while total phosphorus discharged equalled 6.5 mg/l and .81 lbs. per day.

DISCUSSION

The basic problem with this treatment plant is the severe underloaded condition. The design flow of 70,000 gallons per day is substantially

higher than the actual average daily flow of 15,000 gallons per day. As a result the aeration tank has an extremely low solids content as adequate treatment efficiency cannot be attained. If this condition does not rapidly improve it is recommended that an active mixed liquor be trucked in to increase the aeration tank solids level.

Mr. Bill Matthews operates the treatment plant with no level of certification; Mr. Jack Whitney, a licensed operator, has been retained as a consultant.

Kenneth Schang

LOWER FLORIDA ESTUARY STUDY
DADE COUNTY WASTE SOURCE INVENTORY
TREATMENT PLANT – GENERAL INFORMATION

DATE OF VISIT 12-1-70
PLANT NAME: DADE CHRISTIAN SCHOOLS
PLANT OWNER: DADE CHRISTIAN SCHOOLS
ADDRESS 6601 NW 167 STREET
TELEPHONE 822-7690
COLLECTION SYSTEM – TYPE: FOR SCHOOL FACILITY
OWNER: DADE CHRISTIAN SCHOOLS
ADDRESS: 6601 NW 167 STREET
TELEPHONE 822-7690

DESIGN AVERAGE DESIGN FLOW: .07 MGD YEAR COMPLETED: 1970
STREAM FLOW – cfs DURATION – days FREQUENCY – Yrs STREAM DATA NOT INCLUDED
CONSTRUCTION COST $100,000 APPROXIMATE
POPULATION SERVED 1500 TO 2000 SEASON.

OPERATION ANNUAL COST
PERSONNEL [illegible] JOE WHITNEY - CONSULTANT
LEVEL OF CERTIFICATION NONE
CONDITION OF EQUIPMENT GOOD
OUTFALL TYPE GRAVITY SIZE 8 INCH LENGTH 50 FEET
DISCHARGED TO: 205th STREET CANAL WATER COURSE MILEAGE: –
LATITUDE – LONGITUDE –
TREATMENT (LIST UNITS IN ORDER, EXCLUDING SLUDGE TREATMENT & DISPOSAL)
[illegible] AERATION TANK, SECONDARY CLARIFICATION, TERTIARY FILTER, [illegible]

SLUDGE TREATMENT AEROBIC DIGESTION

DISPOSAL TRUCKED AWAY

REMARKS EFFLUENT FROM GRAVER TERTIARY FILTER IS SENT DOWNWARD AT THE FLOW [illegible] OF THE [illegible] TANK. THERE WERE LARGE QUANTITIES OF SOIL AT THIS POINT. ALSO THE EFFLUENT FROM THE FILTER SCOURED SETTLED SOLIDS FROM THE BOTTOM OF THE CHLORINE CONTACT TANK.
LOADING IS A PROBLEM. DESIGN FLOW - 70,000 GPD AVERAGE FLOW - 15,000 GPD [illegible] (REPORTED TABLE 10). HOWEVER THIS DIVERSION WAS ACCOUNTED FOR IN THE DESIGN.

PREPARED BY: K W [illegible]

LOWER FLORIDA ESTUARY STUDY
DADE COUNTY WASTE SOURCE INVENTORY
TREATMENT PLANT FIELD SHEET

PLANT DADE CHRISTIAN SCHOOLS

							AVERAGE
DATE ON		12-1-70					
TIME ON		2:15 PM					
DATE OFF		12-1-70					
TIME OFF		3:00 PM					
FLOW	START	No Flow					
	END	[illegible]					
	TOTAL						
	24 hr. Flow Rate						
INF.	TEMP. ON	[illegible]	SAMPLED AT	2:30			
	PH - ON						
EFFLUENT	TEMP - ON	[illegible]	SAMPLED AT	2:35			
	PH - ON	[illegible]					
	Cl. Residual	[illegible]					
	CHLORINE-ON	[illegible]					
	CHLORINE-OFF						
	ON-OFF-lbs						

DATE	WASTE CHARACTERISTICS	PLANT OPERATION	AUTO. SAMPLER OPERATION	SAMPLES COLLECTED BY
12-1-70		GOOD - NEW FACILITY	—	SCHANG

LOWER FLORIDA ESTUARY STUDY
DADE COUNTY WASTE SOURCE INVENTORY
TREATMENT PLANT – SCHEMATIC DIAGRAM

PLANT DADE CHRISTIAN SCHOOLS

DRAW COMPLETE FLOW DIAGRAM OF TREATMENT PLANT AND OUTFALL. LABEL EACH UNIT. SHOW LOCATIONS OF SAMPLE COLLECTION AND FLOW MEASURING DEVICES

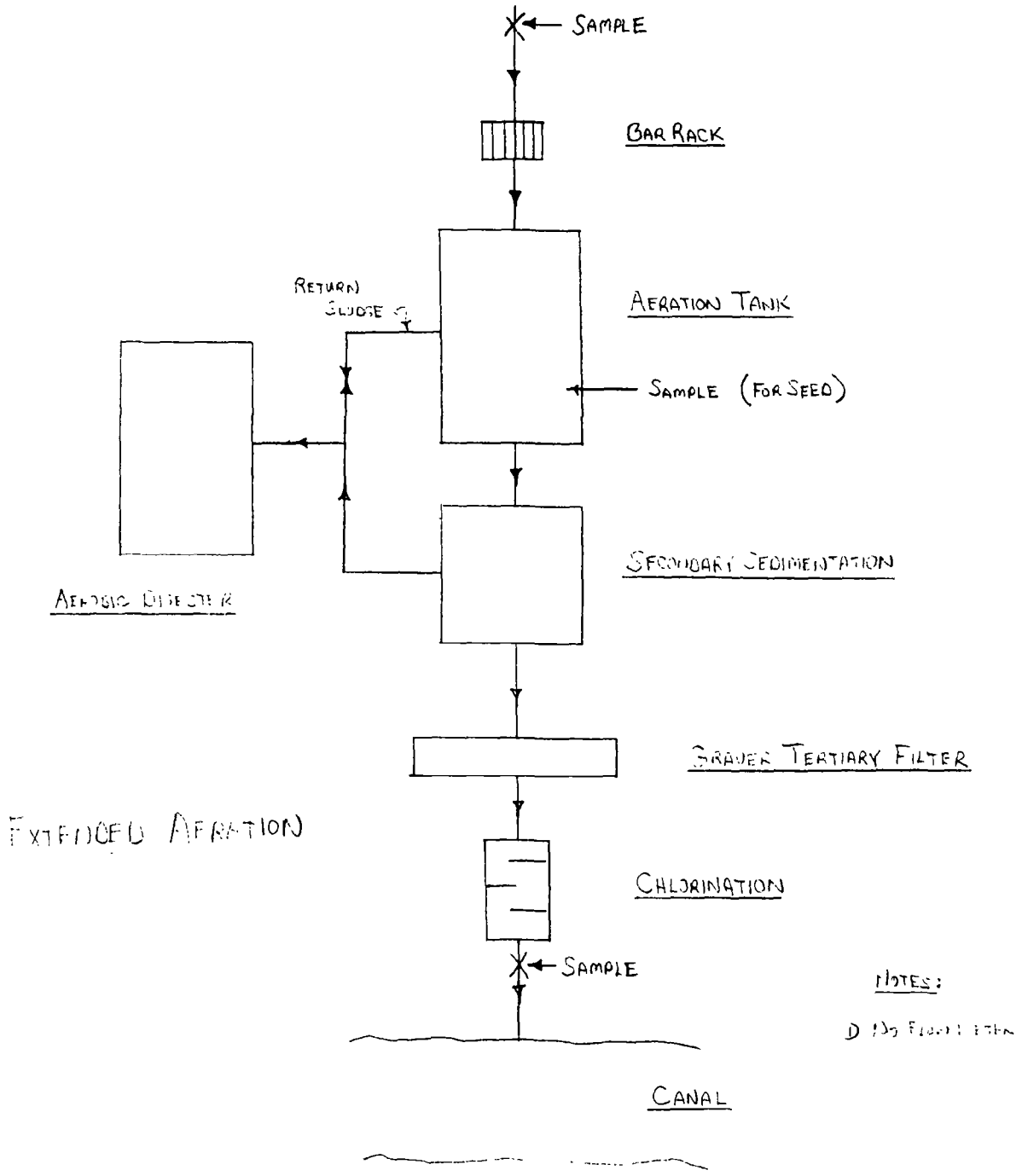

PREPARED BY: K. J. Schang

Sheet ___ of _____

LOWER FLORIDA ESTUARY STUDY
DADE COUNTY WASTE SOURCE INVENTORY
INFLUENT – EFFLUENT – DATA SUMMARY

PLANT Dade Christian School

							AVERAGE
DATE - OFF		12/1/70					
FLOW - MGD		.015					
5 DAY B O D mg/l	INFLUENT	136					
	EFFLUENT	42					
	IN - OUT	94					
	% REMOVAL	69.1					
	LOAD-lbs/day	525					
C O D mg/l	INFLUENT	573					
	EFFLUENT	120					
	IN - OUT	453					
	% REMOVAL	79.1					
	LOAD -lbs/day	15.01					
T S S mg/l	INFLUENT	72					
	EFFLUENT	13					
	IN - OUT	59					
	% REMOVAL	81.9					
	LOAD- lbs/day	1.63					
V S S mg/l	INFLUENT	N.R.					
	EFFLUENT	N.R.					
	IN - OUT						
	% REMOVAL						
	LOAD –lbs/day						
Settlable Solids ml/l	INFLUENT	0.3					
	EFFLUENT	0.0					
	IN - OUT						
	% REMOVAL	100.0					
T O C mg/l	INFLUENT	110					
	EFFLUENT	27					
	IN - OUT						
	% REMOVAL	75.5					
	LOAD - lbs/day	3.38					

INFLUENT BOD POPULATION EQUIVALENT = 100

EFFLUENT BOD POPULATION EQUIVALENT = 31

LOAD = FLOW (MGD) x EFFLUENT (mg/l) x 8.34 = lbs/day

.015

From The Desk Of Michael V. Polito

Sheet____ of_____

LOWER FLORIDA ESTUARY STUDY
DADE COUNTY WASTE SOURCE INVENTORY
EFFLUENT DATA SUMMARY

PLANT Dade Christian School.

							AVERAGE or MEDIAN*
DATE - OFF		12/1/70					
FLOW - MGD		.015					
KTELDAHL NITROGEN as N	CONC.-mg/l	9.5					
	LOAD-lbs/day	1.19					
AMMONIA NITROGEN as N	CONC.-mg/l	8.0					
	LOAD-lbs/day	1.6					
ORGANIC NITROGEN as N	CONC.-mg/l	1.5					
	LOAD-lbs/day	.19					
NO_2 -NO_3 as N	CONC.-mg/l	136.0					
	LOAD-lbs/day	17.01					
TOTAL PHOSPHORUS AS P	CONC.-mg/l	6.5					
	LOAD-lbs/day	.81					
CHLORIDE	CONC.-mg/l	—					
	Influ.	136.0					
TOTAL COLIFORM	CONC - MPN/100ml						
Fecal COLIFORM	CONC - MPN/100ml						

*Calculate Median for Total & Fecal Coliform Concentrations and Average for All Other Parameters.

Lower Florida Estuary Study
Operation Report on
Del-Ray Gardens Sewage Treatment Plant
1255 W. 49th Place
Hialeah, Dade County, Florida
March 15, 1971

INTRODUCTION

The Del-Ray Gardens Sewage Treatment Plant was inspected and sampled on January 5, 1971 by Kenneth Schang. Grab samples of the influent and effluent after chlorination were obtained. The treatment plant is a Davco Contact Stabilization package unit with chlorination prior to discharge to the Little River Canal. Initial contact was made through Mr. Hollis Wheeler, plant operator.

SUMMARY AND CONCLUSIONS

BOD_5 removal efficiency equalled 94.4%.

Total suspended solids removal equalled 88.7% with an effluent concentration of 14 mg/l.

A chlorine residual of 10+ ppm was measured in the chlorine contact tank immediately prior to discharge.

INVENTORY

1. Aeration tank; diffused air system.
2. Secondary sedimentation.
3. Stabilization tank; diffused air system.
4. Chlorine contact.
5. Aerobic digester; diffused air system.

DISCUSSION

BOD_5, COD and TOC removal efficiencies were 94.4, 96.1, and 97.3% respectively with corresponding effluent concentrations of 12.5, 31 and 5 mg/l respectively.

The plant effected 100% reduction of settleable solids from an influent level of .2 ml/l. Total suspended solids were reduced 88.7% to 14 mg/l in the effluent.

Nutrient effluent concentrations were relatively insignificant. Organic nitrogen: 1.08 mg/l; nitrate-nitrite as N: .6 mg/l; total phosphorus: 7.2 mg/l.

RECOMMENDATIONS

The treatment plant has been phased out, with the raw sewage now going to ocean outfall.

At the time of inspection, the treatment plant was in good physical condition, with comparable operating efficiencies.

Mr. Wheeler is licensed class "C".

Kenneth Schang

LOWER FLORIDA ESTUARY STUDY
DADE COUNTY WASTE SOURCE INVENTORY
TREATMENT PLANT – GENERAL INFORMATION

DATE OF VISIT 1-5-71
PLANT NAME: DEL RAY GARDENS APARTMENTS
PLANT OWNER: DEL RAY GARDENS APARTMENTS
ADDRESS 1255 W. 49 PLACE
TELEPHONE [illegible]-0550
COLLECTION SYSTEM – TYPE: SEWERS APARTMENT COMPLEX
OWNER: DEL RAY GARDENS
ADDRESS: 1255 W. 49 PLACE
TELEPHONE [illegible]-0550

DESIGN AVERAGE DESIGN FLOW: .040 MGD YEAR COMPLETED: 1966
STREAM FLOW – cfs | DURATION – days FREQUENCY – Yrs
CONSTRUCTION COST NOT KNOWN
POPULATION SERVED 484 PERSONS

OPERATION ANNUAL COST NOT KNOWN
PERSONNEL [illegible] WHEELER OPERATOR
LEVEL OF CERTIFICATION [illegible] "C" OPERATOR
CONDITION OF EQUIPMENT [illegible]
OUTFALL TYPE [illegible] SIZE 3 INCHES LENGTH 50 FEET
DISCHARGED TO: LITTLE RIVER WATER COURSE MILEAGE: –
LATITUDE – LONGITUDE –
TREATMENT (LIST UNITS IN ORDER, EXCLUDING SLUDGE TREATMENT & DISPOSAL)

AERATION TANK, SECONDARY SEDIMENTATION, CHLORINE CONTACT, CANAL

DRIED [illegible] STABILIZATION

SLUDGE TREATMENT [illegible] DIGESTER

DISPOSAL TRUCKED [illegible]

REMARKS

PREPARED BY: KW Schang

LOWER FLORIDA ESTUARY STUDY
DADE COUNTY WASTE SOURCE INVENTORY
TREATMENT PLANT FIELD SHEET

PLANT DEL-RAY GARDENS

							AVERAGE
DATE ON		1-5-70					
TIME ON		10:30					
DATE OFF		1-5-70					
TIME OFF		11:00					
FLOW	START	1 3/4 INCHES					
	END	45° V-NOTCH WEIR					
	TOTAL	.006 MGD					
	24 hr. Flow Rate						
INF.	TEMP. ON	[illegible]					
	PH - ON	–					
EFFLUENT	TEMP - ON	[illegible]					
	PH - ON	–					
	Cl. Residual	[illegible]					
	CHLORINE-ON						
	CHLORINE-OFF						
	ON-OFF-lbs						

DATE	WASTE CHARACTERISTICS	PLANT OPERATION	AUTO. SAMPLER OPERATION	SAMPLES COLLECTED BY
[illegible]		PUMPING SECONDARY SLAUGHTER SCUM ON AERATION TANKS	–	SCUBADS

LOWER FLORIDA ESTUARY STUDY
DADE COUNTY WASTE SOURCE INVENTORY
TREATMENT PLANT -- SCHEMATIC DIAGRAM

PLANT DEL-RAY GARDENS

DRAW COMPLETE FLOW DIAGRAM OF TREATMENT PLANT AND OUTFALL. LABEL EACH UNIT. SHOW LOCATIONS OF SAMPLE COLLECTION AND FLOW MEASURING DEVICES

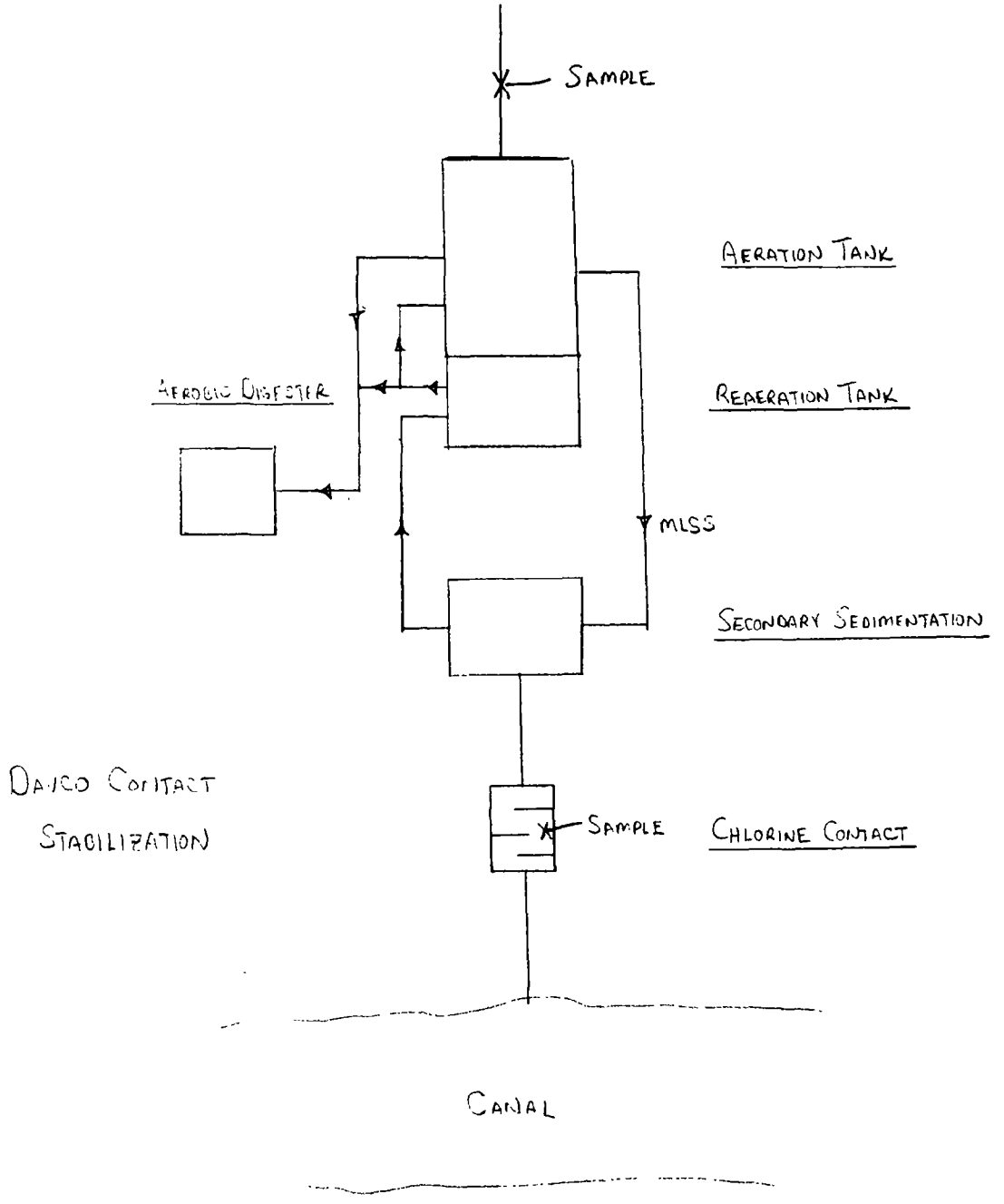

PREPARED BY: KW Schang

Sheet ___ of _____

LOWER FLORIDA ESTUARY STUDY
DADE COUNTY WASTE SOURCE INVENTORY
INFLUENT – EFFLUENT – DATA SUMMARY

PLANT Del-Ray Gardens

							AVERAGE
DATE - OFF		1-5-71					
FLOW - MGD		.006					
5 DAY B O D mg/l	INFLUENT	225					
	EFFLUENT	12.5					
	IN - OUT	94.4					
	% REMOVAL	94.4					
	LOAD-lbs/day	.62					
C O D mg/l	INFLUENT	803					
	EFFLUENT	31					
	IN - OUT	772					
	% REMOVAL	96.1					
	LOAD -lbs/day	1.55					
T S S mg/l	INFLUENT	124					
	EFFLUENT	14					
	IN - OUT	110					
	% REMOVAL	88.7					
	LOAD- lbs/day	.7					
V S S mg/l	INFLUENT	110					
	EFFLUENT	13.4					
	IN - OUT	96.6					
	% REMOVAL	87.8					
	LOAD –lbs/day	.67					
Settlable Solids ml/l	INFLUENT	0.2					
	EFFLUENT	0.0					
	IN - OUT	.2					
	% REMOVAL	100					
T O C mg/l	INFLUENT	165					
	EFFLUENT	5					
	IN - OUT	160.5					
	% REMOVAL	97.3					
	LOAD - lbs/day	.25					

INFLUENT BOD POPULATION EQUIVALENT = 66 11.25

EFFLUENT BOD POPULATION EQUIVALENT = 4 .62

LOAD = FLOW (MGD) x EFFLUENT (mg/l) x 8.34 = lbs/day

Released

From The Desk Of
Michael V. Polito

Sheet____ of_____

LOWER FLORIDA ESTUARY STUDY
DADE COUNTY WASTE SOURCE INVENTORY
EFFLUENT DATA SUMMARY

PLANT Del Ray Gardens

DATE - OFF		1-5-71					AVERAGE or MEDIAN*
FLOW - MGD							
KTELDAHL NITROGEN as N	CONC.-mg/l	1.1					
	LOAD-lbs/day	.055					
AMMONIA NITROGEN as N	CONC.-mg/l	0.02					
	LOAD-lbs/day	.001					
ORGANIC NITROGEN as N	CONC.-mg/l	1.08					
	LOAD-lbs/day	.054					
NO_2 -NO_3 as N	CONC.-mg/l	0.6					
	LOAD-lbs/day	.03					
TOTAL PHOSPHORUS AS P	CONC.-mg/l	7.2					
	LOAD-lbs/day	.36					
CHLORIDE	CONC.-mg/l	104					
TOTAL COLIFORM	CONC - MPN/100ml						
Fecal COLIFORM	CONC - MPN/100ml						

*Calculate Median for Total & Fecal Coliform Concentrations and Average for All Other Parameters.

Lower Florida Estuary Study
Report on Waterborne Wastes from
El Rancho Apartments Sewage Treatment Plant
14500 S.W. 88th Avenue
Miami, Dade County, Florida
February 23, 1971

INTRODUCTION

The El Rancho Apartment Sewage Treatment Plant was inspected and sampled on December 10, 1970 by Kenneth Schang. Grab samples of the influent and effluent after chlorination were obtained. The unit is a contact stabilization package plant with Jetflo tertiary filters and discharge to a soakage pit. The inspection was conducted in conjunction with James Barlow, plant operator.

SUMMARY AND CONCLUSIONS

BOD_5 removal efficiency equalled 96.5% with a stream loading of 1.43 lbs. per day and an effluent concentration of 8.6 ppm.

Total suspended solids removal efficiency approached 95% with 2.17 lbs. per day loading being discharged. Settleable solids were removed 100% based on an influent concentration of 6 ml/l.

A chlorine residual of 1.5 ppm existed in the final dosing tank prior to discharge to the soakage pit.

INVENTORY

1. Comminutor.
2. Aeration tank, diffused air system.
3. Secondary sedimentation.
4. Equalizing tank.
5. Jetflo filters and chlorination.
6. Dosing tank.
7. Reaeration tank, contact stabilization.
8. Aerobic digester, waste sludge hauled away.

RESULTS

A considerable quantity of nitrate-nitrite nitrogen in the effluent was the only parameter of major concern. The concentration was 16.4 mg/l with a stream loading of 2.74 lbs. per day based on the average design flow of .02 MGD. In examining the other nutrient loadings, organic nitrogen equalled .25 lbs. per day with an effluent concentration of 1.5 ppm and a total phosphorus loading of .6 lbs. per day based on a concentration of 3.6 mg/l.

Rated removal efficiency was, in all cases, in excess of 90% excepting the removal of TOC which approached 89%. BOD_5, COD and TOC effluent concentrations were 8.6, 28 and 30.5 mg/l with the loading discharged being 1.43, 4.67 and 5.09 lbs. per day.

Settleable solids were 100% removed and total suspended solids were measured at 13 mg/l which means 2.17 lbs. per day of total suspended solids being discharged.

DISCUSSION

No recommendations for operational improvement are in order; the plant was in good physical condition.

Operators are Mr. James Barlow and Mr. Bud Rollins, both having class "C" licenses.

Kenneth Schang

LOWER FLORIDA ESTUARY STUDY
DADE COUNTY WASTE SOURCE INVENTORY
TREATMENT PLANT – GENERAL INFORMATION

DATE OF VISIT 12-10-70
PLANT NAME: EL RANCHO APARTMENTS
PLANT OWNER: EL RANCHO APARTMENTS
ADDRESS 14500 S.W. 88 AVENUE
TELEPHONE
COLLECTION SYSTEM – TYPE: SERVES APARTMENT COMPLEX
OWNER: EL RANCHO APARTMENTS
ADDRESS: 14500 S.W. 88 AVENUE
TELEPHONE

DESIGN AVERAGE DESIGN FLOW: .02 MGD YEAR COMPLETED: 1970
STREAM FLOW NA cfs DURATION NA days FREQUENCY NA Yrs
CONSTRUCTION COST $55,000
POPULATION SERVED 89 UNITS

OPERATION ANNUAL COST $4000
PERSONNEL [illegible] BUD ROLLINS
LEVEL OF CERTIFICATION [illegible] OPERATORS
CONDITION OF EQUIPMENT GOOD

OUTFALL TYPE NOT APPLICABLE SIZE NOT APPLICABLE LENGTH NOT APPLICABLE
DISCHARGED TO: SOAKAGE PIT WATER COURSE MILEAGE: NOT APPLICABLE
LATITUDE – LONGITUDE –

TREATMENT (LIST UNITS IN ORDER, EXCLUDING SLUDGE TREATMENT & DISPOSAL)
CONTACT STABILIZATION
COMMINUTOR, AERATION TANK, SECONDARY SEDIMENTATION, REAERATION TANK,
EQUALIZING TANK, JETEC FILTERS + CHLORINATION, DOSING TANK SOAKAGE PIT

SLUDGE TREATMENT AEROBIC DIGESTION

DISPOSAL TRUCKED AWAY

REMARKS

PREPARED BY: KW Schang

LOWER FLORIDA ESTUARY STUDY
DADE COUNTY WASTE SOURCE INVENTORY
TREATMENT PLANT FIELD SHEET

PLANT EL RANCHO

							AVERAGE
DATE ON		12-10-70					
TIME ON		11:35					
DATE OFF		12-10-70					
TIME OFF		12:05					
FLOW	START	No Flow					
	END	No Flow Meter					
	TOTAL						
	24 hr. Flow Rate						
INF.	TEMP. ON	27°C	Sampled at	11:45			
	PH - ON	-					
EFFLUENT	TEMP - ON	27°C	Sampled at	11:55			
	PH - ON	-					
	Cl. Residual	1.5 PPM					
	CHLORINE-ON						
	CHLORINE-OFF						
	ON-OFF-lbs						

DATE	WASTE CHARACTERISTICS	PLANT OPERATION	AUTO. SAMPLER OPERATION	SAMPLES COLLECTED BY
12-10-70		Good - Clear Effluent	-	Schanz

LOWER FLORIDA ESTUARY STUDY
DADE COUNTY WASTE SOURCE INVENTORY
TREATMENT PLANT – SCHEMATIC DIAGRAM

PLANT EL RANCHO APARTMENTS

DRAW COMPLETE FLOW DIAGRAM OF TREATMENT PLANT AND OUTFALL. LABEL EACH UNIT. SHOW LOCATIONS OF SAMPLE COLLECTION AND FLOW MEASURING DEVICES

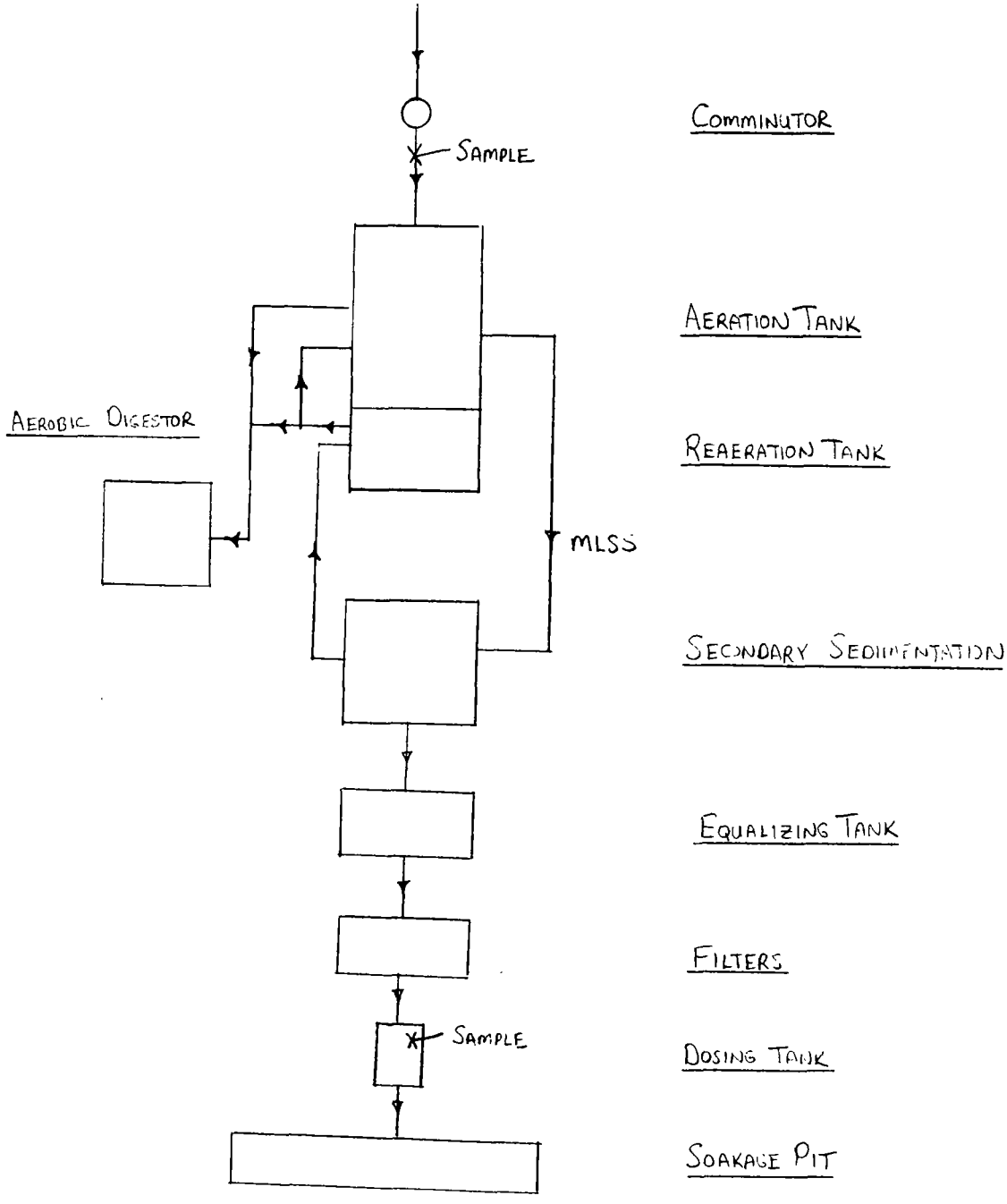

PREPARED BY: KW Schang

Sheet ___ of ___

LOWER FLORIDA ESTUARY STUDY
DADE COUNTY WASTE SOURCE INVENTORY
INFLUENT – EFFLUENT – DATA SUMMARY

PLANT El Rancho

							AVERAGE
DATE - OFF		12/10/70					
FLOW - MGD		.02					
5 DAY B O D mg/l	INFLUENT	242					
	EFFLUENT	8.6					
	IN - OUT						
	% REMOVAL	96.5					
	LOAD-lbs/day	1.43					
C O D mg/l	INFLUENT	626					
	EFFLUENT	28					
	IN - OUT						
	% REMOVAL	95.5					
	LOAD -lbs/day	4.67					
T S S mg/l	INFLUENT	232					
	EFFLUENT	13					
	IN - OUT						
	% REMOVAL	94.4					
	LOAD- lbs/day	2.17					
V S S mg/l	INFLUENT	152					
	EFFLUENT	6					
	IN - OUT						
	% REMOVAL	96.1					
	LOAD –lbs/day	1					
Settlable Solids ml/l	INFLUENT	6					
	EFFLUENT	0.1					
	IN - OUT						
	% REMOVAL	100					
T O C mg/l	INFLUENT	262.5					
	EFFLUENT	30.5					
	IN - OUT						
	% REMOVAL	88.4					
	LOAD - lbs/day	5.09					

INFLUENT BOD POPULATION EQUIVALENT = 225

EFFLUENT BOD POPULATION EQUIVALENT = 8

LOAD = FLOW (MGD) x EFFLUENT (mg/l) x 8.34 = lbs/day

From The Desk Of Michael V. Polito

Sheet____ of_____

LOWER FLORIDA ESTUARY STUDY
DADE COUNTY WASTE SOURCE INVENTORY
EFFLUENT DATA SUMMARY

PLANT El Rancho

							AVERAGE or MEDIAN*
DATE - OFF		12/10					
FLOW - MGD		.02					
KTELDAHL NITROGEN as N	CONC.-mg/l	2.5					
	LOAD-lbs/day	.417					
AMMONIA NITROGEN as N	CONC.-mg/l	1.0					
	LOAD-lbs/day	.17					
ORGANIC NITROGEN as N	CONC.-mg/l	1.5					
	LOAD-lbs/day	.25					
NO_2 -NO_3 as N	CONC.-mg/l	16.4					
	LOAD-lbs/day	2.74					
TOTAL PHOSPHORUS AS P	CONC.-mg/l	3.6					
	LOAD-lbs/day	.6					
CHLORIDE	CONC.-mg/l	67					
TOTAL COLIFORM	CONC - MPN/100ml						
Fecal COLIFORM	CONC - MPN/100ml						

*Calculate Median for Total & Fecal Coliform Concentrations and Average for All Other Parameters.

Lower Florida Estuary Study
Operation Report on
Florida Portland Cement Sewage Treatment Plant
Krome Avenue and S.W. 64th Street
Westwood Lakes, Dade County, Florida
March 15, 1971

INTRODUCTION

The Florida Portland Cement Sewage Treatment Plant was inspected and sampled on January 8, 1971 by Kenneth Schang. Grab samples of the influent and effluent after chlorination were obtained. The treatment plant consists of an Imhoff tank with trickling filter and chlorination prior to discharge to a drainfield. Initial contact was made through the maintenance engineer for the entire complex.

SUMMARY AND CONCLUSIONS

BOD removal was 89.6% effective with 8 mg/l being measured in the effluent.

An influent settleable solids level of .8 ml/l was reduced to zero in the effluent.

The final chlorine residual equalled 3 ppm.

INVENTORY

1. Imhoff tank; waste sludge hauled away.
2. Trickling filter.
3. Chlorine contact.

RESULTS

(Since there was no flow at the time of inspection, loadings could not be accurately determined).

BOD_5, COD and TOC removal efficiencies were 89.6, 81.3 and 76.6% with effluent concentrations of 8, 95 and 41 mg/l.

Total suspended solids were removed with 96.9% efficiency producing an effluent concentration of 14 mg/l. Settleable solids removal was 100% effective.

Organic nitrogen, nitrate-nitrite as N, and total phosphorus effluent concentrations were measured at 2.02, 9.4 and 5.8 mg/l respectively.

DISCUSSION

Considering efficiency data in conjunction with the visual inspection, no recommendations appear to be necessary.

Plant operation is the duty of maintenance personnel. None are certified as operators.

Overall plant condition was good.

Kenneth Schang

LOWER FLORIDA ESTUARY STUDY
DADE COUNTY WASTE SOURCE INVENTORY
TREATMENT PLANT – GENERAL INFORMATION

DATE OF VISIT 1-8-71
PLANT NAME: FLORIDA PORTLAND CEMENT
PLANT OWNER: FLORIDA PORTLAND CEMENT
ADDRESS KROME AVENUE AND S.W. 64 STREET
TELEPHONE 371-4352
COLLECTION SYSTEM – TYPE: SERVES CEMENT PLANT
OWNER: FLORIDA PORTLAND CEMENT
ADDRESS: KROME AVENUE AND S.W. 64 STREET
TELEPHONE 371-4352

DESIGN AVERAGE DESIGN FLOW: .0045 MGD YEAR COMPLETED: 1957
STREAM FLOW NA cfs | DURATION NA days FREQUENCY NA Yrs
CONSTRUCTION COST NOT KNOWN
POPULATION SERVED 130 PERSONS

OPERATION ANNUAL COST NOT KNOWN
PERSONNEL MAINTENANCE
LEVEL OF CERTIFICATION NONE
CONDITION OF EQUIPMENT FAIR

OUTFALL TYPE GRAVITY SIZE NA LENGTH NA
DISCHARGED TO: DRAINFIELD WATER COURSE MILEAGE: NOT APPLICABLE
LATITUDE LONGITUDE –

TREATMENT (LIST UNITS IN ORDER, EXCLUDING SLUDGE TREATMENT & DISPOSAL)
IMHOFF TANK, TRICKLING FILTER, CHLORINE CONTACT, DRAINFIELD

SLUDGE TREATMENT IMHOFF TANK

DISPOSAL TRUCKED AWAY

REMARKS

PREPARED BY: KW Schang

LOWER FLORIDA ESTUARY STUDY
DADE COUNTY WASTE SOURCE INVENTORY
TREATMENT PLANT FIELD SHEET

PLANT Florida Portland Cement

							AVERAGE
DATE ON		1-8-71					
TIME ON		1:30					
DATE OFF		1-8-71					
TIME OFF		2:00					
FLOW	START	0 Flow					
	END						
	TOTAL						
	24 hr. Flow Rate						
INF.	TEMP. ON	80° F					
	PH - ON	-					
EFFLUENT	TEMP - ON	80° F					
	PH - ON	-					
	Cl. Residual	3 PPM					
	CHLORINE-ON						
	CHLORINE-OFF						
	ON-OFF-lbs						

DATE	WASTE CHARACTERISTICS	PLANT OPERATION	AUTO. SAMPLER OPERATION	SAMPLES COLLECTED BY
1-8-70	Minage - Cigarette Butts	O.K. - Imhoff Tank & Trickling Filter	-	Schang
	and other floatables			

LOWER FLORIDA ESTUARY STUDY
DADE COUNTY WASTE SOURCE INVENTORY
TREATMENT PLANT – SCHEMATIC DIAGRAM

PLANT FLORIDA PORTLAND CEMENT

DRAW COMPLETE FLOW DIAGRAM OF TREATMENT PLANT AND OUTFALL. LABEL EACH UNIT. SHOW LOCATIONS OF SAMPLE COLLECTION AND FLOW MEASURING DEVICES

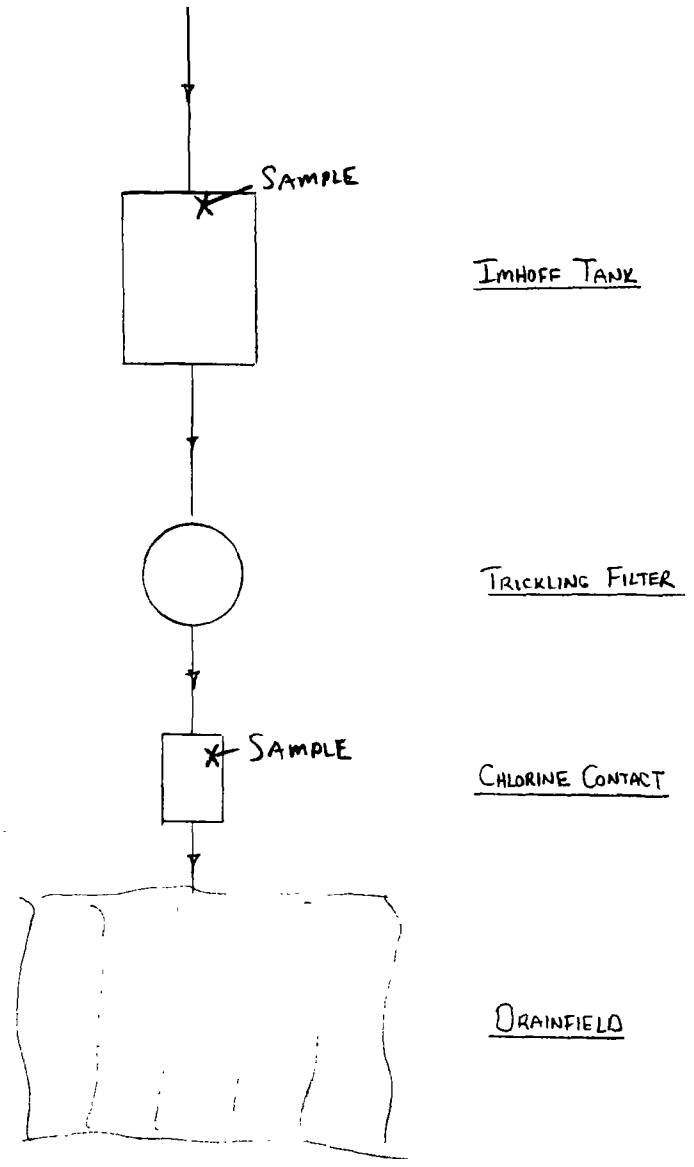

PREPARED BY: KW Schang

Sheet ___ of _____

LOWER FLORIDA ESTUARY STUDY
DADE COUNTY WASTE SOURCE INVENTORY
INFLUENT – EFFLUENT – DATA SUMMARY

PLANT Fla. Perr. Cement

							AVERAGE
DATE - OFF		1/8/71					
FLOW - MGD		(.0045)					
5 DAY B O D mg/l	INFLUENT	77					
	EFFLUENT	8					
	IN - OUT						
	% REMOVAL	89.6					
	LOAD-lbs/day	(.3)					
C O D mg/l	INFLUENT	507					
	EFFLUENT	95					
	IN - OUT						
	% REMOVAL	81.3					
	LOAD -lbs/day	(3.56)					
T S S mg/l	INFLUENT	452					
	EFFLUENT	14					
	IN - OUT						
	% REMOVAL	96.9					
	LOAD- lbs/day	(.52)					
V S S mg/l	INFLUENT	424					
	EFFLUENT	4					
	IN - OUT						
	% REMOVAL	99.1					
	LOAD –lbs/day	(.15)					
Settlable Solids ml/l	INFLUENT	.8					
	EFFLUENT	0					
	IN - OUT						
	% REMOVAL	100					
T O C mg/l	INFLUENT	175					
	EFFLUENT	41					
	IN - OUT	134					
	% REMOVAL	76.6					
	LOAD - lbs/day	(1.54)					

INFLUENT BOD POPULATION EQUIVALENT = 17 2.8375

EFFLUENT BOD POPULATION EQUIVALENT = 2 .3

LOAD = FLOW (MGD) x EFFLUENT (mg/l) x 8.34 = lbs/day

Released
From The Desk Of
Michael V. Polito MP.

LOWER FLORIDA ESTUARY STUDY
DADE COUNTY WASTE SOURCE INVENTORY
EFFLUENT DATA SUMMARY

Sheet____ of_____

PLANT Fla. Portland Cement

							AVERAGE or MEDIAN*
DATE - OFF		1/8/71					
FLOW - MGD		(.0045)					
KTELDAHL NITROGEN as N	CONC.-mg/l	2.1					
	LOAD-lbs/day	(.08)					
AMMONIA NITROGEN as N	CONC.-mg/l	0.08					
	LOAD-lbs/day	(.003)					
ORGANIC NITROGEN as N	CONC.-mg/l	2.02					
	LOAD-lbs/day	(.076)					
NO_2 -NO_3 as N	CONC.-mg/l	9.4					
	LOAD-lbs/day	(.35)					
TOTAL PHOSPHORUS AS P	CONC.-mg/l	5.8					
	LOAD-lbs/day	(.22)					
CHLORIDE	CONC.-mg/l	103					
TOTAL COLIFORM	CONC - MPN/100ml						
Fecal COLIFORM	CONC - MPN/100ml						

*Calculate Median for Total & Fecal Coliform Concentrations and Average for All Other Parameters.

Lower Florida Estuary Study
Report on Waterborne Wastes from
Food Fair Store #291 Sewage Treatment Plant
10400 N.W. 7th Avenue
Miami, Dade County, Florida
February 23, 1971

INTRODUCTION

The Food Fair Store #291 Sewage Treatment Plant was inspected and sampled on December 3, 1970 by Kenneth Schang. Grab samples of the influent and effluent after chlorination were obtained. The treatment plant is a Chicago Pump Extended Aeration package unit with chlorination prior to discharge to a drainfield. The inspection was conducted in conjunction with Mr. J. D'Agostino, plant operator.

SUMMARY AND CONCLUSIONS

Removal efficiency was above 90% for all test parameters. BOD_5 effluent concentration was 3 mg/l indicating a .38 lb. per day discharge calculated using the design flow of .015 MGD.

Removal of suspended solids equalled 95% with an effluent concentration of 46 mg/l and 5.75 lbs. per day being discharged. There were no settleable solids in the influent or effluent.

The chlorine residual in the dosing tank was measured as 2 ppm.

INVENTORY

1. Bar screen and comminutor at influent to the wet well.
2. Aeration tank, diffused air.
3. Secondary sedimentation.
4. Dosing tank and chlorination.
5. Anaerobic sludge holding tank.

RESULTS

Removal efficiency for BOD_5, COD and TOC was 98.9, 90.1 and 90.3% respectively. This is equivalent to effluent concentrations of 3, 60, and 15 mg/l with the corresponding loading being .38, 7.5, and 1.88 lbs. per day based on the average design flow.

There were no settleable solids present in either the influent or effluent, while suspended solids removal efficiency approached 95%. This resulted in an effluent concentration of 46 mg/l and 5.75 lbs. per day being discharged to the drainfield.

Nutrient loadings for organic nitrogen, nitrate-nitrite nitrogen and total phosphorus were .24, 1.88 and .7 lbs. per day calculated from 1.9, 15 and 5.6 mg/l effluent concentrations.

DISCUSSION

The one problem with regard to this treatment plant was the existence of pop-ups in the secondary clarifier. As a solution it is suggested that the rate of sludge return be evaluated to

determine if this might be a source of the problem.

Mr. D'Agostino, plant operator, is licensed class "C".

General plant appearance was good.

Kenneth Schang

LOWER FLORIDA ESTUARY STUDY
DADE COUNTY WASTE SOURCE INVENTORY
TREATMENT PLANT – GENERAL INFORMATION

DATE OF VISIT 12-3-70
PLANT NAME: FOOD FAIR STORE # 291
PLANT OWNER: FOOD FAIR
ADDRESS 10400 NW 7 AVENUE
TELEPHONE 696-0620 (MAINTENANCE)
COLLECTION SYSTEM – TYPE: SERVES FOOD STORE
OWNER: FOOD FAIR
ADDRESS: 10400 NW 7 AVENUE
TELEPHONE 696-0620 (MAINTENANCE)

DESIGN AVERAGE DESIGN FLOW: .015 MGD YEAR COMPLETED: 1968
STREAM FLOW NA cfs | DURATION NA days FREQUENCY NA Yrs
CONSTRUCTION COST $15,000
POPULATION SERVED NOT KNOWN 12 STORES

OPERATION ANNUAL COST $400
PERSONNEL JOE D'AGOSTINO - OPERATOR
LEVEL OF CERTIFICATION CLASS C OPERATOR
CONDITION OF EQUIPMENT GOOD

OUTFALL TYPE NOT APPLICABLE SIZE NOT APPLICABLE LENGTH NOT APPLICABLE
DISCHARGED TO: DRAINFIELD WATER COURSE MILEAGE: NOT APPLICABLE
LATITUDE NOT APPLICABLE LONGITUDE NOT APPLICABLE

TREATMENT (LIST UNITS IN ORDER, EXCLUDING SLUDGE TREATMENT & DISPOSAL)

CAR SCREEN, COMMINUTOR, SPLITTER BOX, AERATION TANK, SECONDARY SEDIMENTATION, CHLORINE TANK AND CHLORINATION, DRAINFIELD

CHICAGO PUMP - EXTENDED AERATION

SLUDGE TREATMENT SLUDGE HOLDING TANK - ANAEROBIC DIGESTION

DISPOSAL TRUCKED AWAY

REMARKS NO INFLUENT AT TIME OF VISIT
1) POP UPS IN SECONDARY SEDIMENTATION TANK

PREPARED BY: KW Schang

LOWER FLORIDA ESTUARY STUDY
DADE COUNTY WASTE SOURCE INVENTORY
TREATMENT PLANT FIELD SHEET

PLANT Food Fair #291

							AVERAGE
DATE ON		12-3-70					
TIME ON		8:30					
DATE OFF		12-3-70					
TIME OFF		9:15					
FLOW	START	No Flow					
	END	Meter					
	TOTAL						
	24 hr. Flow Rate						
INF.	TEMP. ON	27°C	Sampled at	8:45			
	PH - ON						
EFFLUENT	TEMP - ON	27°C	Sampled at	8:50			
	PH - ON						
	Cl. Residual	2 ppm					
	CHLORINE-ON						
	CHLORINE-OFF						
	ON-OFF-lbs						

DATE	WASTE CHARACTERISTICS	PLANT OPERATION	AUTO. SAMPLER OPERATION	SAMPLES COLLECTED BY
12-3-70		Good - Some solids in effluent	–	Schang

LOWER FLORIDA ESTUARY STUDY
DADE COUNTY WASTE SOURCE INVENTORY
TREATMENT PLANT – SCHEMATIC DIAGRAM

PLANT Food Fair # 291

DRAW COMPLETE FLOW DIAGRAM OF TREATMENT PLANT AND OUTFALL. LABEL EACH UNIT. SHOW LOCATIONS OF SAMPLE COLLECTION AND FLOW MEASURING DEVICES

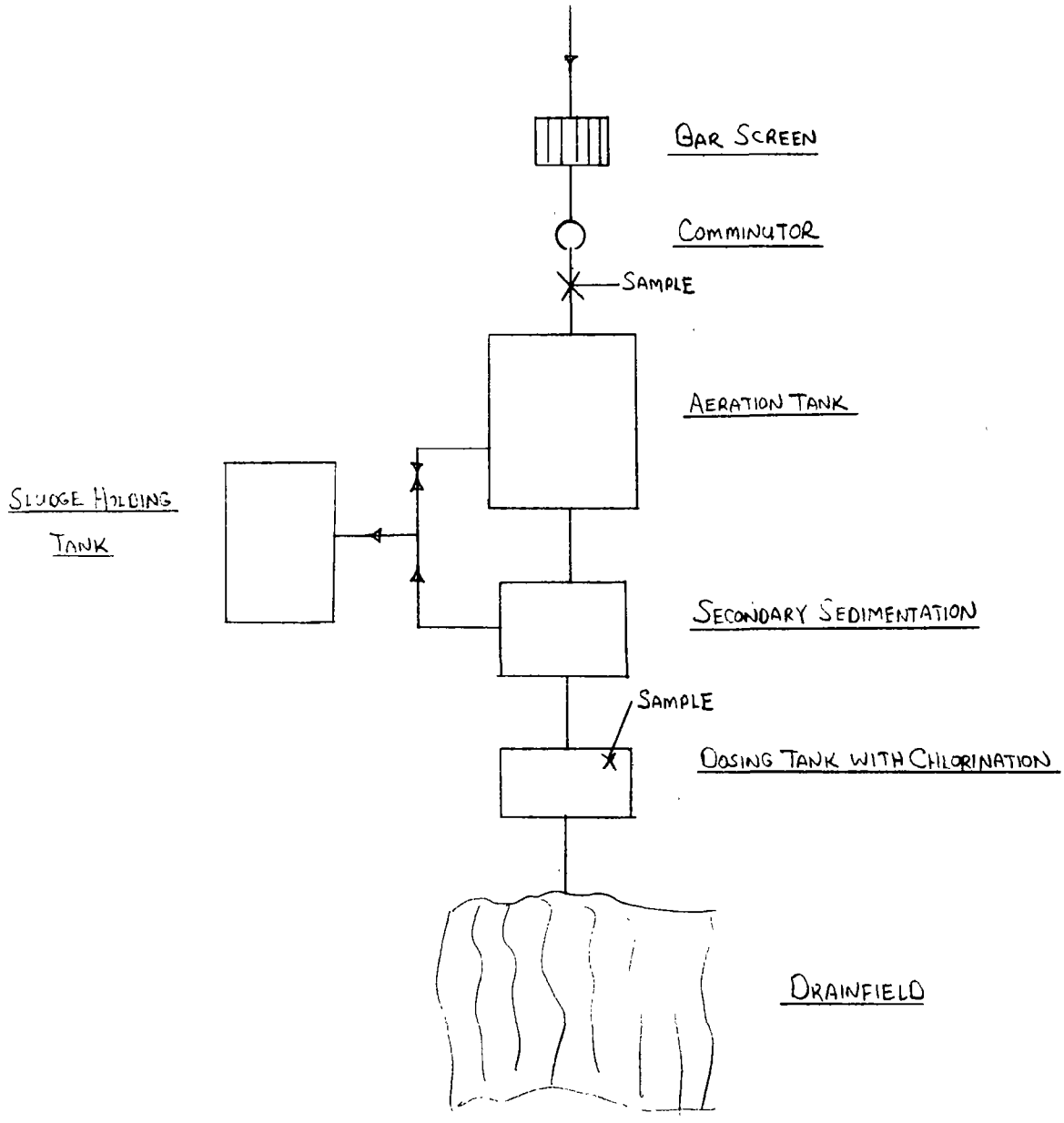

Chicago Pump
Extended Aeration

PREPARED BY: K.V. Schang

Sheet ___ of ___

LOWER FLORIDA ESTUARY STUDY

DADE COUNTY WASTE SOURCE INVENTORY

INFLUENT – EFFLUENT – DATA SUMMARY

PLANT Food Fair # 291

								AVERAGE
DATE - OFF		12/3						
FLOW - MGD		.015						
5 DAY BOD mg/l	INFLUENT	276						
	EFFLUENT	3.0						
	IN - OUT							
	% REMOVAL	98.9						
	LOAD-lbs/day	.38						
COD mg/l	INFLUENT	604						
	EFFLUENT	60						
	IN - OUT							
	% REMOVAL	90.1						
	LOAD -lbs/day	7.5						
TSS mg/l	INFLUENT	[illegible]						
	EFFLUENT	[illegible]						
	IN - OUT							
	% REMOVAL	94.9						
	LOAD- lbs/day	5.75						
VSS mg/l	INFLUENT	[illegible]						
	EFFLUENT	[illegible]						
	IN - OUT							
	% REMOVAL	0						
	LOAD –lbs/day	4.5						
Settlable Solids ml/l	INFLUENT	0.0						
	EFFLUENT	0.0						
	IN - OUT							
	% REMOVAL	0						
TOC mg/l	INFLUENT	155						
	EFFLUENT	15						
	IN - OUT							
	% REMOVAL	90.3						
	LOAD - lbs/day	1.88						

INFLUENT BOD POPULATION EQUIVALENT = 1,012

EFFLUENT BOD POPULATION EQUIVALENT = 11

LOAD = FLOW (MGD) x EFFLUENT (mg/l) x 8.34 = lbs/day

From The Desk Of Michael V. Polito

LOWER FLORIDA ESTUARY STUDY
DADE COUNTY WASTE SOURCE INVENTORY
EFFLUENT DATA SUMMARY

Sheet____ of_____

PLANT Food Fair

								AVERAGE or MEDIAN*
DATE - OFF		12/3						
FLOW - MGD		.015						
KTELDAHL NITROGEN as N	CONC.-mg/l	2.2						
	LOAD-lbs/day	.28						
AMMONIA NITROGEN as N	CONC.-mg/l	0.3						
	LOAD-lbs/day	.038						
ORGANIC NITROGEN as N	CONC.-mg/l	1.9						
	LOAD-lbs/day	.24						
NO_2 -NO_3 as N	CONC.-mg/l	15.0						
	LOAD-lbs/day	1.88						
TOTAL PHOSPHORUS ASP	CONC.-mg/l	5.6						
	LOAD-lbs/day	.7						
CHLORIDE	CONC.-mg/l	110.0						
TOTAL COLIFORM	CONC - MPN/100ml							
Fecal COLIFORM	CONC - MPN/100ml							

*Calculate Median for Total & Fecal Coliform Concentrations and Average for All Other Parameters.

Lower Florida Estuary Study
Report on Waterborne Wastes from
Goldberg Apartments Sewage Treatment Plant
6775 S.W. 44th Street
South Miami, Dade County, Florida
March 15, 1971

INTRODUCTION

The Goldberg Apartments Sewage Treatment Plant was inspected and sampled on January 11, 1971 by Kenneth Schang. Grab samples at the influent and effluent after chlorination were obtained. The treatment plant is a Defiance Extended Aeration package unit, with tertiary filtration and chlorination prior to discharge to a soakage pit. Initial contact was made through Mr. Goldberg, owner of the apartment building.

SUMMARY AND CONCLUSIONS

BOD_5 removal efficiency equalled 96% producing an effluent concentration of 8.5 mg/l.

Total suspended solids were reduced 79.6% from 108 mg/l to 22 mg/l.

A chlorine residual of .25 ppm was measured in the effluent immediately prior to discharge.

INVENTORY

1. Bar screen.
2. Aeration tanks; diffused air system.
3. Secondary sedimentation.
4. Chlorination.
5. Tertiary filtration.
6. Aerated holding tank; diffused air system.

DISCUSSION

BOD_5, COD and TOC removal efficiencies equalled 96, 85.5 and 85.2% respectively with corresponding effluent concentrations of 8.5, 91 and 20 mg/l and respective stream loadings of .71, 7.59 and 1.67 lbs. per day based on the design flow.

A zero settleable solids value was measured in the influent and effluent. Total suspended solids removal efficiency was 79.6%, producing an effluent concentration of 22 mg/l and a stream loading of 1.83 lbs. per day.

Nutrient effluent concentrations were relatively significant: ammonia nitrogen: 16.8 mg/l; nitrate-nitrite as N: 19.2 mg/l; total phosphorus: 11.9 mg/l.

RECOMMENDATIONS

An adequate evaluation of this treatment plant is difficult because of relative newness. Aeration tank solids are not to proper levels.

The plant was in good physical condition.

Mr. Dudley, plant operator, is preparing to take the licensing examination for class "C" certification.

Kenneth Schang

LOWER FLORIDA ESTUARY STUDY
DADE COUNTY WASTE SOURCE INVENTORY
TREATMENT PLANT – GENERAL INFORMATION

DATE OF VISIT 1-11-71
PLANT NAME: GOLDBERG APARTMENTS
PLANT OWNER: GOLDBERG APARTMENTS
ADDRESS 6775 S.W. 44 STREET
TELEPHONE —
COLLECTION SYSTEM – TYPE: SEAVES APARTMENT
OWNER: GOLDBERG APARTMENTS
ADDRESS: 6775 S.W. 44 STREET
TELEPHONE —

DESIGN AVERAGE DESIGN FLOW: .01 MGD YEAR COMPLETED: 1970
STREAM FLOW NA cfs | DURATION NA days FREQUENCY NA Yrs
CONSTRUCTION COST $5,000
POPULATION SERVED 120 PERSONS APPROXIMATELY

OPERATION ANNUAL COST NOT DETERMINABLE
PERSONNEL MR DUDLEY OPERATOR
LEVEL OF CERTIFICATION NONE
CONDITION OF EQUIPMENT NEW PLANT

OUTFALL TYPE – SIZE – LENGTH –
DISCHARGED TO: SOAKAGE PIT WATER COURSE MILEAGE: –
LATITUDE – LONGITUDE –

TREATMENT (LIST UNITS IN ORDER, EXCLUDING SLUDGE TREATMENT & DISPOSAL)

BAR SCREEN, AERATION TANKS, SECONDARY SEDIMENTATION, CHLORINATION, TERTIARY FILTER, SOAKAGE PIT.

DEFIANCE PLANT AND FILTER

SLUDGE TREATMENT AERATED HOLDING TANK

DISPOSAL TRUCKED AWAY

REMARKS

PREPARED BY: KW Schang

Sheet 2 of 3

LOWER FLORIDA ESTUARY STUDY
DADE COUNTY WASTE SOURCE INVENTORY
TREATMENT PLANT FIELD SHEET

PLANT GOLDBERG APARTMENTS

							AVERAGE
DATE ON		1-11-71					
TIME ON		[illegible]					
DATE OFF		1-11-71					
TIME OFF		[illegible]					
FLOW	START	[illegible]					
FLOW	END	[illegible]					
FLOW	TOTAL	—					
FLOW	24 hr. Flow Rate						
INF.	TEMP. ON	[illegible]					
INF.	PH - ON	—					
EFFLUENT	TEMP - ON	[illegible]					
EFFLUENT	PH - ON	—					
EFFLUENT	Cl. Residual						
EFFLUENT	CHLORINE-ON						
EFFLUENT	CHLORINE-OFF						
EFFLUENT	ON-OFF-lbs						

DATE	WASTE CHARACTERISTICS	PLANT OPERATION	AUTO. SAMPLER OPERATION	SAMPLES COLLECTED BY
	[illegible]	GOOD - [illegible]	—	[illegible]
		[illegible]		

LOWER FLORIDA ESTUARY STUDY
DADE COUNTY WASTE SOURCE INVENTORY
TREATMENT PLANT – SCHEMATIC DIAGRAM

PLANT GOLDBERG APARTMENTS

DRAW COMPLETE FLOW DIAGRAM OF TREATMENT PLANT AND OUTFALL. LABEL EACH UNIT. SHOW LOCATIONS OF SAMPLE COLLECTION AND FLOW MEASURING DEVICES

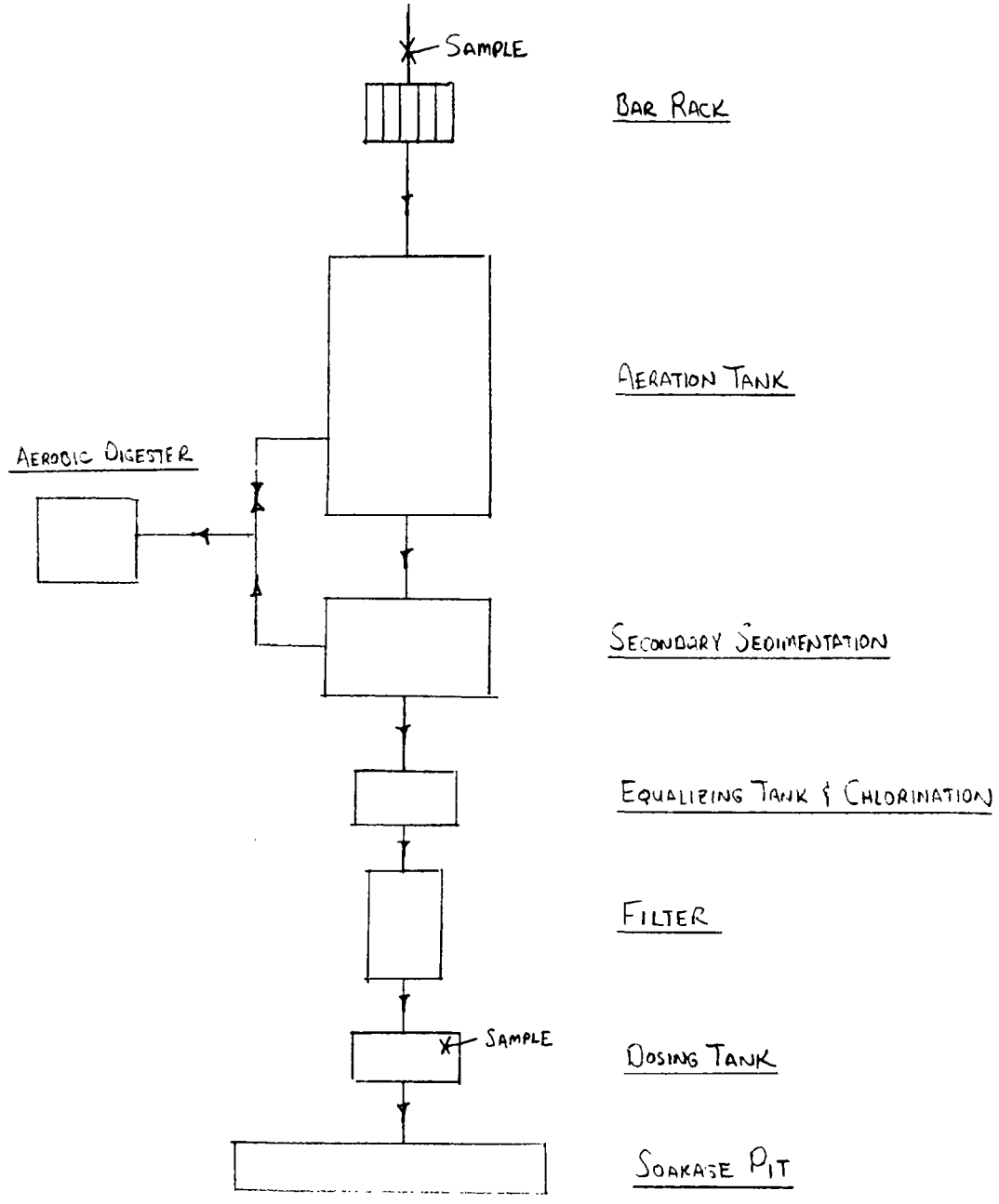

DEFIANCE EXTENDED AERATION

PREPARED BY: KW Schang

Sheet ___ of _____

LOWER FLORIDA ESTUARY STUDY
DADE COUNTY WASTE SOURCE INVENTORY
INFLUENT – EFFLUENT – DATA SUMMARY

PLANT Goldberg Apts

							AVERAGE
DATE - OFF		1/11					
FLOW - MGD		.01					
5 DAY B O D mg/l	INFLUENT	212.0					
	EFFLUENT	8.5					
	IN - OUT						
	% REMOVAL	96.0					
	LOAD-lbs/day	.71					
C O D mg/l	INFLUENT	626					
	EFFLUENT	91					
	IN - OUT						
	% REMOVAL	85.5					
	LOAD -lbs/day	7.59					
T S S mg/l	INFLUENT	108					
	EFFLUENT	22					
	IN - OUT						
	% REMOVAL	79.6					
	LOAD- lbs/day	1.83					
V S S mg/l	INFLUENT	96					
	EFFLUENT	18					
	IN - OUT						
	% REMOVAL	81.5					
	LOAD –lbs/day	1.5					
Settlable Solids ml/l	INFLUENT	0.0					
	EFFLUENT	0.0					
	IN - OUT						
	% REMOVAL	N.A.					
T O C mg/l	INFLUENT	135					
	EFFLUENT	20					
	IN - OUT						
	% REMOVAL	85.2					
	LOAD - lbs/day	1.67					

INFLUENT BOD POPULATION EQUIVALENT = 104 17.68

EFFLUENT BOD POPULATION EQUIVALENT = 4 .71

LOAD = FLOW (MGD) x EFFLUENT (mg/l) x 8.34 = lbs/day

Released
From The Desk Of
Michael V. Polito

LOWER FLORIDA ESTUARY STUDY
DADE COUNTY WASTE SOURCE INVENTORY
EFFLUENT DATA SUMMARY

Sheet____ of_____

PLANT Goldberg Apts.

							AVERAGE or MEDIAN*
DATE - OFF		1/11					
FLOW - MGD							
KTELDAHL NITROGEN as N	CONC.-mg/l	19.7					
	LOAD-lbs/day	1.64					
AMMONIA NITROGEN as N	CONC.-mg/l	16.8					
	LOAD-lbs/day	1.4					
ORGANIC NITROGEN as N	CONC.-mg/l	2.9					
	LOAD-lbs/day	.24					
NO_2 -NO_3 as N	CONC.-mg/l	19.2					
	LOAD-lbs/day	1.6					
TOTAL PHOSPHORUS AS P	CONC.-mg/l	11.9					
	LOAD-lbs/day	.99					
CHLORIDE	CONC.-mg/l	67					
TOTAL COLIFORM	CONC - MPN/100ml						
Fecal COLIFORM	CONC - MPN/100ml						

*Calculate Median for Total & Fecal Coliform Concentrations and Average for All Other Parameters.

Lower Florida Estuary Study
Operation Report on
Helman Court Apartments Sewage Treatment Plant
15401 Biscayne Drive
Homestead, Dade County, Florida
March 15, 1971

INTRODUCTION

The Helman Court Apartments Sewage Treatment Plant was inspected and sampled on December 9, 1970 by Kenneth Schang and Joe Hopson (Dade County Pollution Control Inspector). Grab samples of the influent and effluent were obtained. The treatment plant utilizes the extended aeration process with chlorination prior to discharge to a drainfield. Initial contact was made through Mr. Helman, owner of the apartment complex.

SUMMARY AND CONCLUSIONS

The BOD_5 removal efficiency approached 97% with an effluent concentration of 23.9 mg/l.

An effluent settleable solids level of .1 ml/l was a 97.5% reduction from the 4 ml/l present in the influent.

There was a total absence of chlorine in the effluent; the chlorinator did not appear to be operating properly.

INVENTORY

1. Aeration tanks; diffused air system.
2. Secondary sedimentation.
3. Dosing tank + chlorination.
4. Anaerobic sludge holding tank, with waste sludge being recirculated.

RESULTS

BOD_5, COD and TOC removal efficiencies of 96.7, 94.5 and 94.6% respectively produced estimated effluent loadings of 4.98, 17.9 and 3.96 lbs. per day respectively, based on the design flow of .025 MGD.

Settleable solids removal was equally efficient at 97.5% with .1 ml/l present in the effluent. Total suspended solids effluent concentration was measured at 166 mg/l for an efficiency of 66.5% and an estimated loading of 34.6 lbs. per day.

Organic nitrogen, nitrate-nitrate as N, and total phosphorus effluent concentrations were 7.9, 4.0 and 7.7 mg/l respectively.

DISCUSSION

The physical appearance of the plant did not appear adequate in that several sections of piping were loose, the chlorinator was not functioning, and the dosing tank was dirty. Alleviation of these conditions is recommended.

In addition, recirculation of the anaerobic sludge from the holding tank illustrates poor practice; this could induce a serious loading condition on the treatment plant that may upset operation. Another more adequate method of disposal should be incorporated.

A flow meter should be installed.

Operation of the plant is conducted by Mr. Eric Etienne, apartment manager. Mr. Etienne is not certified as an operator.

Kenneth Schang

LOWER FLORIDA ESTUARY STUDY
DADE COUNTY WASTE SOURCE INVENTORY
TREATMENT PLANT – GENERAL INFORMATION

DATE OF VISIT 12-9-70
PLANT NAME: HELMAN COURT APARTMENTS
PLANT OWNER: HELMAN COURT APARTMENTS
ADDRESS 15401 BISCAYNE DRIVE
TELEPHONE –
COLLECTION SYSTEM – TYPE: SERIES APARTMENTS
OWNER: HELMAN COURT APARTMENTS
ADDRESS: 15401 BISCAYNE DRIVE
TELEPHONE –

DESIGN AVERAGE DESIGN FLOW: .025 MGD YEAR COMPLETED: 1965
STREAM FLOW NA cfs DURATION NA days FREQUENCY NA Yrs
CONSTRUCTION COST $30,000
POPULATION SERVED 123 FAMILIES 4 PERSON PER FAMILY

OPERATION ANNUAL COST $2470
PERSONNEL ERIC ETIENNE – APT. MANAGER ERWIN LABS – ANALYSIS
LEVEL OF CERTIFICATION NONE
CONDITION OF EQUIPMENT FAIR

OUTFALL TYPE NOT APPLICABLE SIZE NOT APPLICABLE LENGTH NOT APPLICABLE
DISCHARGED TO: DRAINFIELD WATER COURSE MILEAGE: NOT APPLICABLE
LATITUDE NOT APPLICABLE LONGITUDE NOT APPLICABLE

TREATMENT (LIST UNITS IN ORDER, EXCLUDING SLUDGE TREATMENT & DISPOSAL)

AERATION TANKS, SECONDARY SEDIMENTATION, DOSING TANK + CHLORINATION,
DRAINFIELD

EXTENDED AERATION

SLUDGE TREATMENT SLUDGE HOLDING TANK – ANAEROBIC DIGESTION

DISPOSAL RECIRCULATED – LOW SOLIDS LOADING IN PLANT

REMARKS

PREPARED BY: KW Schang

Sheet 2 of 3

LOWER FLORIDA ESTUARY STUDY
DADE COUNTY WASTE SOURCE INVENTORY
TREATMENT PLANT FIELD SHEET

PLANT HELMAN COURT APTS.

							AVERAGE
DATE ON		12-9-70					
TIME ON		11:30					
DATE OFF		12-9-70					
TIME OFF		12:15					
FLOW	START	No Flow					
	END	METER					
	TOTAL						
	24 hr. Flow Rate						
INF.	TEMP. ON	27°C	SAMPLED 11:	50			
	PH - ON	-					
EFFLUENT	TEMP - ON	27°C	SAMPLED 12:	00			
	PH - ON	-					
	Cl. Residual	None					
	CHLORINE-ON						
	CHLORINE-OFF						
	ON-OFF-lbs						

DATE	WASTE CHARACTERISTICS	PLANT OPERATION	AUTO. SAMPLER OPERATION	SAMPLES COLLECTED BY
12-9-70		FAIR - EFFLUENT OK	-	SCHANG

LOWER FLORIDA ESTUARY STUDY
DADE COUNTY WASTE SOURCE INVENTORY
TREATMENT PLANT – SCHEMATIC DIAGRAM

PLANT HELMAN COURT APARTMENTS

DRAW COMPLETE FLOW DIAGRAM OF TREATMENT PLANT AND OUTFALL. LABEL EACH UNIT. SHOW LOCATIONS OF SAMPLE COLLECTION AND FLOW MEASURING DEVICES

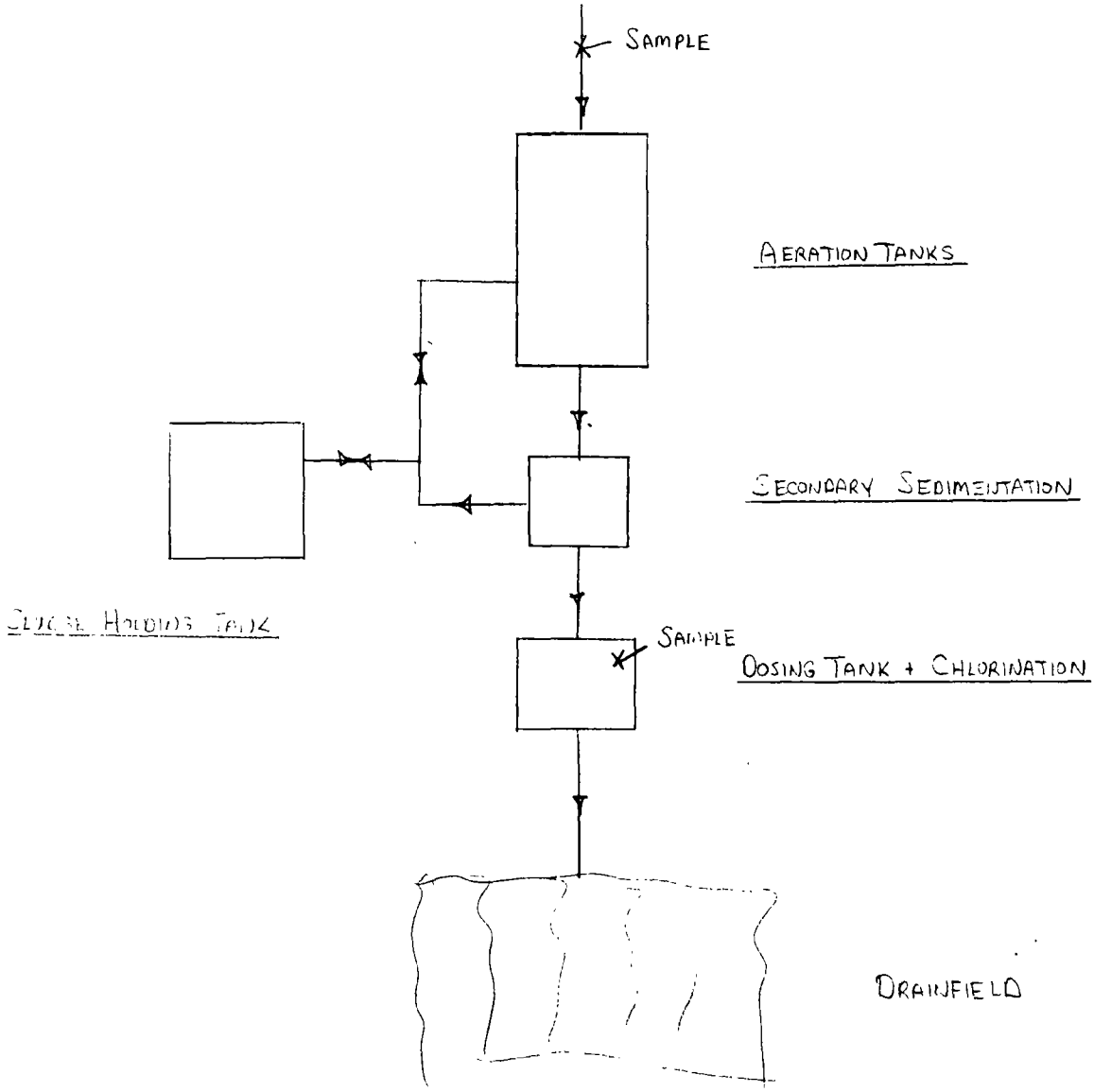

PREPARED BY: KWJ Schang

Sheet ___ of ___

LOWER FLORIDA ESTUARY STUDY
DADE COUNTY WASTE SOURCE INVENTORY
INFLUENT – EFFLUENT – DATA SUMMARY

PLANT Helman Ct. Apts

								AVERAGE
DATE - OFF		12/~~10~~9						
FLOW - MGD		.025						
5 DAY BOD mg/l	INFLUENT	>717						
	EFFLUENT	23.9						
	IN - OUT							
	% REMOVAL	>96.7						
	LOAD-lbs/day	4.98						
COD mg/l	INFLUENT	1,526						
	EFFLUENT	86						
	IN - OUT							
	% REMOVAL	94.5						
	LOAD -lbs/day	17.9						
TSS mg/l	INFLUENT	496						
	EFFLUENT	166						
	IN - OUT							
	% REMOVAL	66.5						
	LOAD- lbs/day	34.6						
VSS mg/l	INFLUENT	447						
	EFFLUENT	156						
	IN - OUT							
	% REMOVAL	65.2						
	LOAD –lbs/day	32.5						
Settlable Solids ml/l	INFLUENT	4						
	EFFLUENT	.1						
	IN OUT							
	% REMOVAL	97.5						
TOC mg/l	INFLUENT	350						
	EFFLUENT	19						
	IN - OUT							
	% REMOVAL	94.6						
	LOAD - lbs/day	3.96						

INFLUENT BOD POPULATION EQUIVALENT = 876

EFFLUENT BOD POPULATION EQUIVALENT = 29

LOAD = FLOW (MGD) x EFFLUENT (mg/l) x 8.34 = lbs/day

From The Desk Of
Michael V. Polito

Sheet____ of_____

LOWER FLORIDA ESTUARY STUDY
DADE COUNTY WASTE SOURCE INVENTORY
EFFLUENT DATA SUMMARY

PLANT Helman Ct. Apts.

							AVERAGE or MEDIAN*
DATE - OFF		12/~~10~~9					
FLOW - MGD		.025					
KTELDAHL NITROGEN as N	CONC.-mg/l	14.3					
	LOAD-lbs/day	2.98					
AMMONIA NITROGEN as N	CONC.-mg/l	6.4					
	LOAD-lbs/day	1.33	1.33				
ORGANIC NITROGEN as N	CONC.-mg/l	7.9					
	LOAD-lbs/day	1.65					
NO_2 -NO_3 as N	CONC.-mg/l	4.0					
	LOAD-lbs/day	.83					
TOTAL PHOSPHORUS AS P	CONC.-mg/l	7.7					
	LOAD-lbs/day	1.6					
CHLORIDE	CONC.-mg/l	43					
TOTAL COLIFORM	CONC - MPN/100ml						
Fecal COLIFORM	CONC - MPN/100ml						

*Calculate Median for Total & Fecal Coliform Concentrations and Average for All Other Parameters.

Lower Florida Estuary Study
Report on Waterborne Wastes from
Hialeah City Hall Sewage Treatment Plant
501 Palm Avenue
Hialeah, Dade County, Florida
February 23, 1971

INTRODUCTION

The Hialeah City Hall Sewage Treatment Plant was inspected and sampled on December 1, 1970 at approximately 10:30 a.m., by Kenneth Schang and Frank Ansley (Dade County Pollution Control Inspector). Grab samples of the influent and effluent after pre-chlorination were obtained. The plant is a Chicago Pump-Rapid Block Aeration package unit with effluent being discharged into a drainfield. The inspection was conducted in conjunction with Mr. George Wheeler, sewage treatment operator for the City of Hialeah. Initial contact was made through Mr. Beverage of the City of Hialeah, Department of Water and Sewers.

SUMMARY AND CONCLUSIONS

BOD_5 removal equalled 90.4% with an effluent concentration of 26 ppm and an estimated loading of 8.67 lbs. per day calculated from the average design flow of .04 MGD.

An influent settleable solids level of 15 ml/l was reduced to .1 ml/l indicating an efficiency of 99.3%.

A chlorine residual of .9 ppm was measured in the dosing tank prior to discharge.

INVENTORY

The unit is a complete mix package plant utilizing:

1. Bar screen and comminutor at the wet well.

2. Aeration tank, diffused air system.

3. Secondary sedimentation, with continuous return sludge.

4. Pre-chlorination, prior to tertiary filtration.

5. Filters, Jetflo pressure filters.

6. Chlorination, provided in dosing tank prior to discharge into a drainfield.

7. Aerobic digestion, diffused air with sludge being trucked away.

Design flow is .04 and the plant serves approximately 550 people.

RESULTS

Estimated loadings for BOD_5, COD and TOC were 8.67, 44.7 and 14.68 lbs. per day respectively based on the average design flow of .04 MGD and effluent concentrations of 26, 134, and 44 mg/l. This signifies respective removal efficiencies of 90.4, 83.2 and 64.8%.

The removal of total suspended solids equalled 82.4% with an effluent concentration of 52 mg/l and a 99.3% settleable solids removal produced .1 ml/l in the effluent.

Estimated nutrient loadings were as follows: Ammonia nitrogen: 4.00 lbs. per day and 12.0 mg/l effluent concentration, nitrate-nitrite as N: 1.33 lbs. per day and 4 mg/l effluent concentration, total phosphorus: 2.37 lbs. per day and 7.1 mg/l effluent concentration.

DISCUSSION

General plant condition: good. The facility appeared to be operating adequately with no recommendations required.

Mr. Wheeler, plant operator, is licensed class "C".

Kenneth Schang

LOWER FLORIDA ESTUARY STUDY
DADE COUNTY WASTE SOURCE INVENTORY
TREATMENT PLANT – GENERAL INFORMATION

DATE OF VISIT 12-1-70
PLANT NAME: HIALEAH CITY HALL
PLANT OWNER: CITY OF HIALEAH
ADDRESS 501 PALM AVENUE
TELEPHONE 822-0420
COLLECTION SYSTEM – TYPE: SERVES CITY HALL BLDG.
OWNER: CITY OF HIALEAH
ADDRESS: 501 PALM AVENUE
TELEPHONE 822-0420

DESIGN AVERAGE DESIGN FLOW: .04 MGD YEAR COMPLETED: 1969
STREAM FLOW NA cfs DURATION NA days FREQUENCY NA Yrs
CONSTRUCTION COST NOT KNOWN
POPULATION SERVED 550 PEOPLE

OPERATION ANNUAL COST $2400 EXCLUDING SALARIES
PERSONNEL [illegible]
LEVEL OF CERTIFICATION [illegible]
CONDITION OF EQUIPMENT

OUTFALL TYPE NOT APPLICABLE SIZE NOT APPLICABLE LENGTH NOT APPLICABLE
DISCHARGED TO: DRAINFIELD WATER COURSE MILEAGE: NOT APPLICABLE
LATITUDE NOT APPLICABLE LONGITUDE NOT APPLICABLE

TREATMENT (LIST UNITS IN ORDER, EXCLUDING SLUDGE TREATMENT & DISPOSAL)
BAR SCREEN, COMMINUTOR AERATION TANK, SECONDARY SEDIMENTATION, PRECHLORINATION, JET FLOW FILTERS, CHLORINATION IN DOSING TANK, DRAINFIELD.

SLUDGE TREATMENT AEROBIC DIGESTION

DISPOSAL TRUCKED AWAY

REMARKS AVERAGE FLOW .035 MGD VS .04 MGD DESIGN - AN APARTMENT CONNECTION IS BEING CONSIDERED.
PLANT CONDITION WAS GOOD - EFFLUENT LOOKED GOOD.

PREPARED BY: K W Schang

Sheet 2 of 3

LOWER FLORIDA ESTUARY STUDY
DADE COUNTY WASTE SOURCE INVENTORY
TREATMENT PLANT FIELD SHEET

PLANT HIALEAH CITY HALL

							AVERAGE
DATE ON		12-1-70					
TIME ON		10:30					
DATE OFF		12-1-70					
TIME OFF		11:15					
FLOW	START	NO FLOW					
	END	METER					
	TOTAL						
	24 hr. Flow Rate						
INF.	TEMP. ON	27°C	SAMPLED AT 10:50				
	PH - ON						
EFFLUENT	TEMP - ON	27°C	SAMPLED AT 10:55				
	PH - ON						
	Cl. Residual	[illegible]					
	CHLORINE-ON						
	CHLORINE-OFF						
	ON-OFF-lbs						

DATE	WASTE CHARACTERISTICS	PLANT OPERATION	AUTO. SAMPLER OPERATION	SAMPLES COLLECTED BY
		ALL PUMPS FUNCTIONING	—	SCHANG
		NO FLOW METER	—	

LOWER FLORIDA ESTUARY STUDY
DADE COUNTY WASTE SOURCE INVENTORY
TREATMENT PLANT – SCHEMATIC DIAGRAM

PLANT HIALEAH CITY HALL

DRAW COMPLETE FLOW DIAGRAM OF TREATMENT PLANT AND OUTFALL. LABEL EACH UNIT. SHOW LOCATIONS OF SAMPLE COLLECTION AND FLOW MEASURING DEVICES

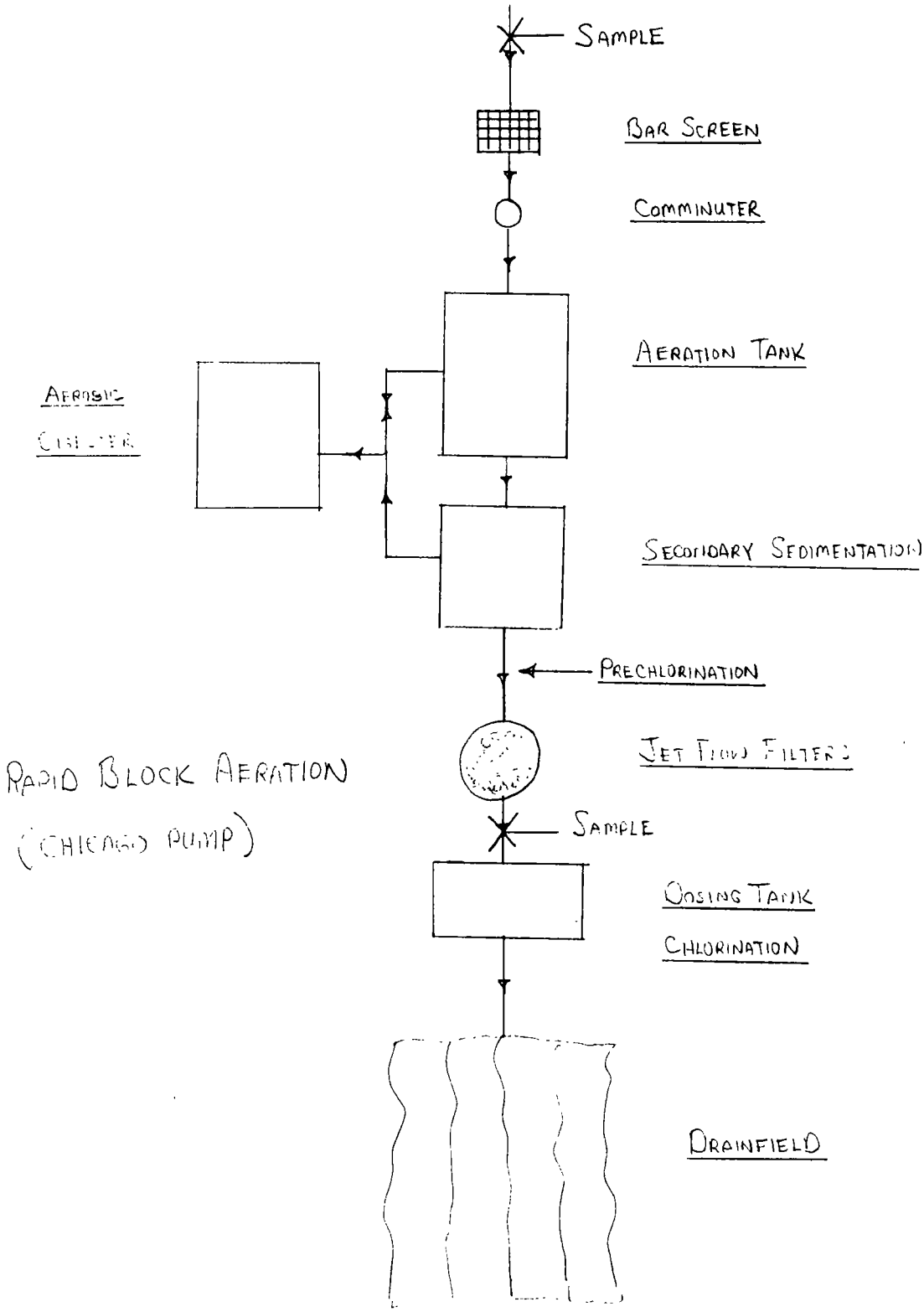

PREPARED BY: K W Schang

Sheet ___ of _____

LOWER FLORIDA ESTUARY STUDY
DADE COUNTY WASTE SOURCE INVENTORY
INFLUENT – EFFLUENT – DATA SUMMARY

PLANT Hialeah City Hall

								AVERAGE
DATE - OFF		12/1/70						
FLOW - MGD		.04						
5 DAY B O D mg/l	INFLUENT	272						
	EFFLUENT	26						
	IN - OUT	246						
	% REMOVAL	90.4						
	LOAD-lbs/day	8.67						
C O D mg/l	INFLUENT	800						
	EFFLUENT	134						
	IN - OUT							
	% REMOVAL	82.2						
	LOAD -lbs/day	44.7						
T S S mg/l	INFLUENT	296						
	EFFLUENT	52.						
	IN - OUT							
	% REMOVAL	82.4						
	LOAD- lbs/day	17.35						
V S S mg/l	INFLUENT	N.R.						
	EFFLUENT	N.R.						
	IN - OUT							
	% REMOVAL							
	LOAD –lbs/day							
Settlable Solids ml/l	INFLUENT	15.0						
	EFFLUENT	0.1						
	IN - OUT							
	% REMOVAL	99.3						
T O C mg/l	INFLUENT	125						
	EFFLUENT	44						
	IN - OUT							
	% REMOVAL	64.8						
	LOAD - lbs/day	14.68						

INFLUENT BOD POPULATION EQUIVALENT = 533

EFFLUENT BOD POPULATION EQUIVALENT = 51

LOAD = FLOW (MGD) x EFFLUENT (mg/l) x 8.34 = lbs/day

From The Desk Of
Michael V. Polito

Sheet____ of_____

LOWER FLORIDA ESTUARY STUDY
DADE COUNTY WASTE SOURCE INVENTORY
EFFLUENT DATA SUMMARY

PLANT Hialeah City Hall

							AVERAGE or MEDIAN*
DATE - OFF		12/1/80					
FLOW - MGD		.04					
KTELDAHL NITROGEN as N	CONC.-mg/l	14.6					
	LOAD-lbs/day	4.87					
AMMONIA NITROGEN as N	CONC.-mg/l	12.0					
	LOAD-lbs/day	4					
ORGANIC NITROGEN as N	CONC.-mg/l	2.6					
	LOAD-lbs/day	.87					
NO_2 -NO_3 as N	CONC.-mg/l	4.0					
	LOAD-lbs/day	1.33					
TOTAL PHOSPHORUS AS P	CONC.-mg/l	7.1					
	LOAD-lbs/day	2.37					
CHLORIDE	CONC.-mg/l	—					
	LOAD-lbs/day	75.0					
TOTAL COLIFORM	CONC - MPN/100ml						
Fecal COLIFORM	CONC - MPN/100ml						

*Calculate Median for Total & Fecal Coliform Concentrations and Average for All Other Parameters.

Lower Florida Estuary Study
Operation Report on
Hialeah Convalescent Home Sewage Treatment Plant
190 West 28th Street
Hialeah, Dade County, Florida
March 16, 1971

INTRODUCTION

The Hialeah Convalescent Home Sewage Treatment Plant was inspected and sampled on December 1, 1970 at approximately 11:15 a.m., by Kenneth Schang and Frank Ansley (Dade County Pollution Control Inspector). Grab samples of the influent and effluent after chlorination were obtained. The plant is a package W & S A-20 Contact Stabilization unit with effluent being discharged into two drainfields. The inspection was conducted in conjunction with Mr. George H. Wheeler, sewage treatment plant operator for the City of Hialeah. Initial contact was made through Mr. Beverage of the City of Hialeah, Department of Water and Sewers.

SUMMARY AND CONCLUSIONS

The treatment plant effected a 69.1% removal of BOD with an effluent concentration of 94 mg/l. The corresponding loading estimated was 19.6 lbs. per day based on the average design flow of 0.025 MGD.

Settleable solids measured at 1 ml/l in the influent were increased five times to 5 ml/l in the effluent.

The chlorine residual was 1.5 ppm in the effluent.

INVENTORY

The unit is a contact stabilization package plant utilizing:

1. Bar rack.

2. Aeration tanks, diffused air system.

3. Secondary sedimentation, with continuous air lifted return sludge.

4. Reaeration, diffused air system.

5. Chlorine contact, with effluent to two drainfields.

6. Aerobic digester, with sludge being trucked away.

Design flow is 0.025 MGD and the plant serves approximately 350 people.

RESULTS

Removal of BOD, COD and TOC equalled 69.1, 64.6 and 26.1% respectively, leaving effluent concentrations of 94, 264 and 85 mg/l. Loadings calculated from the average design flow of 0.025 MGD were 19.6, 55.04 and 17.72 lbs. per day respectively.

Solids removal was relatively inefficient. The influent settleable solids of 1 ml/l was increased 500% to 5 ml/l in the effluent. Efficiency for total suspended solids was 40.3% producing an effluent concentration of 142 mg/l and a loading of 29.6 lbs. per day.

Ammonia nitrogen, nitrate-nitrite as N, and total phosphorus concentrations and loadings were 19.0 mg/l, 3.96 lbs. per day; 0.5 mg/l, 0.1 lbs. per day; 6.1 mg/l, 1.27 lbs. per day respectively.

DISCUSSION

General plant condition: fair. This is due to:

1. The unit having been secondhand when purchased and installed in 1969.

2. Maintenance being provided by the Hialeah Convalescent Home. Maintenance is not always adequate.

3. The nature of the population served. Items introduced by the elderly people into the waste system have induced mechanical breakdowns (according to the plant operator).

Mr. Wheeler is a class "C" operator.

The recommendation that follows is to upgrade the existing facility by the necessary expenditure of funds with regard to new equipment and proper maintenance. This should include installation of a flow meter.

Kenneth Schang

LOWER FLORIDA ESTUARY STUDY
DADE COUNTY WASTE SOURCE INVENTORY
TREATMENT PLANT – GENERAL INFORMATION

DATE OF VISIT 12-1-70
PLANT NAME: HIALEAH CONVALESCENT HOME
PLANT OWNER: HIALEAH CONVALESCENT HOME
ADDRESS 190 W. 28 STREET
TELEPHONE 822-0420 (OPERATED BY CITY OF HIALEAH)
COLLECTION SYSTEM – TYPE: FOR CONVALESCENT HOME
OWNER: HIALEAH CONVALESCENT HOME
ADDRESS: 190 W. 28 STREET
TELEPHONE 822-0420 (CITY OF HIALEAH)

DESIGN AVERAGE DESIGN FLOW: .025 MGD YEAR COMPLETED: 1969
STREAM FLOW NA cfs DURATION NOT APPLICABLE days FREQUENCY Yrs NOT APPLICABLE
CONSTRUCTION COST NOT KNOWN
POPULATION SERVED 350 PEOPLE

OPERATION ANNUAL COST $1260 EXCLUDING SALARIES
PERSONNEL GEORGE H WHEELER
LEVEL OF CERTIFICATION CLASS C OPERATOR
CONDITION OF EQUIPMENT FAIR - PLANT WAS PURCHASED USED
OUTFALL TYPE NOT APPLICABLE SIZE NOT APPLICABLE LENGTH NOT APPLICABLE
DISCHARGED TO: DRAINFIELD WATER COURSE MILEAGE: NOT APPLICABLE
LATITUDE NOT APPLICABLE LONGITUDE NOT APPLICABLE
TREATMENT (LIST UNITS IN ORDER, EXCLUDING SLUDGE TREATMENT & DISPOSAL)
[illegible] AERATION TANK, SECONDARY SETTLING TANK, CHLORINATION

SLUDGE TREATMENT AEROBIC DIGESTER

DISPOSAL [illegible] PIT

REMARKS PLANT IN FAIR CONDITION DUE MOSTLY TO AGE. DISCHARGE TO DRAINFIELD WITH [illegible] TREATED
) MAINTENANCE IS CONDUCTED BY THE CONVALESCENT HOME
) [illegible] STATES THAT OPERATION IS DIFFICULT DUE TO THE CLIMATE SERVED

PREPARED BY: K(W) [illegible]

LOWER FLORIDA ESTUARY STUDY
DADE COUNTY WASTE SOURCE INVENTORY
TREATMENT PLANT FIELD SHEET

PLANT HIALEAH CONVALESCENT HOME

							AVERAGE
DATE ON		12-1-70					
TIME ON		11:15					
DATE OFF		12-1-70					
TIME OFF		11:45					
FLOW	START	No Flow					
	END	METER					
	TOTAL						
	24 hr. Flow Rate						
INF.	TEMP. ON	27° C	SAMPLED AT	11:30			
	PH - ON						
EFFLUENT	TEMP - ON	27° C	SAMPLED AT	11:35			
	PH - ON						
	Cl. Residual	1.5 PPM					
	CHLORINE-ON	[illegible]					
	CHLORINE-OFF						
	ON-OFF-lbs						

DATE	WASTE CHARACTERISTICS	PLANT OPERATION	AUTO. SAMPLER OPERATION	SAMPLES COLLECTED BY
[illegible]		[illegible]	—	SCHAFER
		No Flow Meter	—	

LOWER FLORIDA ESTUARY STUDY
DADE COUNTY WASTE SOURCE INVENTORY
TREATMENT PLANT – SCHEMATIC DIAGRAM

PLANT HIALEAH CONVALESCENT HOME

DRAW COMPLETE FLOW DIAGRAM OF TREATMENT PLANT AND OUTFALL. LABEL EACH UNIT. SHOW LOCATIONS OF SAMPLE COLLECTION AND FLOW MEASURING DEVICES

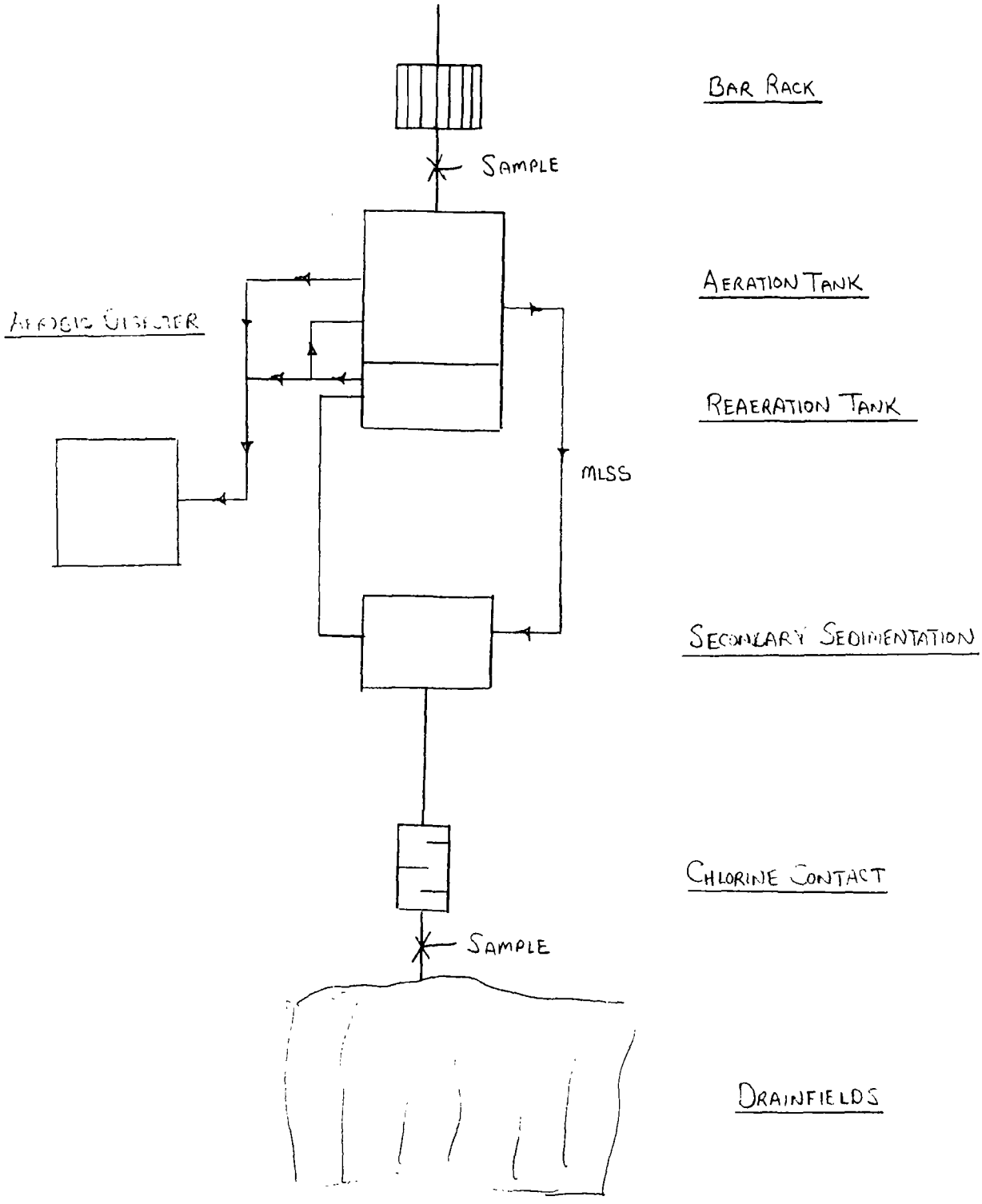

PREPARED BY: KW Schang

Sheet ___ of _____

LOWER FLORIDA ESTUARY STUDY
DADE COUNTY WASTE SOURCE INVENTORY
INFLUENT – EFFLUENT – DATA SUMMARY

PLANT Hialeah Conv. Home

							AVERAGE
DATE - OFF		12/1/70					
FLOW - MGD		.025					
5 DAY B O D mg/l	INFLUENT	304					
	EFFLUENT	94					
	IN - OUT	210					
	% REMOVAL	69.1					
	LOAD-lbs/day	19.6					
C O D mg/l	INFLUENT	745					
	EFFLUENT	264					
	IN - OUT	481					
	% REMOVAL	64.6					
	LOAD -lbs/day	55.04					
T S S mg/l	INFLUENT	238					
	EFFLUENT	142					
	IN - OUT	96					
	% REMOVAL	40.3					
	LOAD- lbs/day	29.61					
V S S mg/l	INFLUENT	N.R.					
	EFFLUENT	N.R.					
	IN - OUT						
	% REMOVAL						
	LOAD –lbs/day						
Settlable Solids ml/l	INFLUENT	1.0					
	EFFLUENT	5.0					
	IN - OUT						
	% REMOVAL						
T O C mg/l	INFLUENT	115					
	EFFLUENT	85					
	IN - OUT	30					
	% REMOVAL	26.1					
	LOAD - lbs/day	17.72					

INFLUENT BOD POPULATION EQUIVALENT = 372

EFFLUENT BOD POPULATION EQUIVALENT = 115

LOAD = FLOW (MGD) x EFFLUENT (mg/l) x 8.34 = lbs/day

From The Desk Of
Michael V. Polito

Sheet____ of_____

LOWER FLORIDA ESTUARY STUDY
DADE COUNTY WASTE SOURCE INVENTORY
EFFLUENT DATA SUMMARY

PLANT Hialeah Conv. Home

							AVERAGE or MEDIAN*
DATE - OFF		12/1/70					
FLOW - MGD		.525					
KTELDAHL NITROGEN as N	CONC.-mg/l	25.5					
	LOAD-lbs/day	5.32					
AMMONIA NITROGEN as N	CONC.-mg/l	19.0					
	LOAD-lbs/day	3.96					
ORGANIC NITROGEN as N	CONC.-mg/l	6.5					
	LOAD-lbs/day	1.36					
NO_2 -NO_3 as N	CONC.-mg/l	0.5					
	LOAD-lbs/day	.1					
TOTAL PHOSPHORUS AS P	CONC.-mg/l	6.1					
	LOAD-lbs/day	1.27					
CHLORIDE	CONC.-mg/l	—					
	Indu.	79.0					
TOTAL COLIFORM	CONC - MPN/100ml						
Fecal COLIFORM	CONC - MPN/100ml						

*Calculate Median for Total & Fecal Coliform Concentrations and Average for All Other Parameters.

Lower Florida Estuary Study
Report on Waterborne Wastes from
Hialeah Hospital Sewage Treatment Plant
651 E. 25th Street
Hialeah, Dade County, Florida
March 22, 1971

INTRODUCTION

The Hialeah Hospital Sewage Treatment Plant was inspected and sampled on December 1, 1970 by Kenneth Schang and Frank Ansley (Dade County Pollution Control Inspector). Grab samples of the influent and effluent after chlorination were obtained. The treatment plant consists of one extended aeration package unit in parallel with two Chicago Pump Contact Stabilization package plants and an open sand filter plus chlorination prior to discharge to a drainfield.

SUMMARY AND CONCLUSIONS

Chlorine residual is of primary concern with regards to hospital wastes. A value of 2.5 ppm was measured in the dosing tank which should effect a sufficient bacteriological kill provided that detention time is adequate.

BOD removal efficiency was 92.2% with 17.26 lbs. per day being discharged based on the design flow of 0.09 MGD.

Suspended solids were measured at 13 mg/l signifying a 9.76 lbs. per day discharge. Settleable solids in the influent (2.5 ml/l) were reduced to zero for a 100% removal efficiency.

INVENTORY

1. Comminutor.

2. Aeration tanks, diffused air systems.

3. Secondary sedimentation.

4. (Two-thirds of the flow goes to contact stabization, one-third to extended aeration). Reaeration tanks; two-thirds of flow.

5. Aerobic digesters.

6. Open sand filters.

7. Dosing tank plus chlorination.

RESULTS

The treatment plant effected 92% removal of BOD indicating a discharge of 17.26 lbs. per day based on the average design flow of 0.09 MGD. Removal of COD was less efficient in that 219.18 lbs. per day or 292 mg/l were discharged in the effluent after 54.8% was removed. The TOC concentration was measured at 18 mg/l with a loading of 13.51 lbs. per day being the result.

Effluent settleable solids equalled zero, with the quantity present in the influent being 2.5 mg/l. Efficiency of suspended solids removal was 91.2% based on an effluent concentration of 13 mg/l and a discharge of 9.76 lbs. per day.

The quantities of ammonia nitrogen, nitrate-nitrite nitrogen and total phosphorus were 9.0, 10.5 and 7.0 mg/l respectively with the consequent loadings equalling 6.76, 7.88 and 5.25 lbs. per day.

DISCUSSION

Treatment efficiency and plant operation appeared adequate for this treatment plant and no recommendations follow.

Plant operational supervisor is Mr. Palbicke, who is not licensed.

Kenneth Schang

LOWER FLORIDA ESTUARY STUDY
DADE COUNTY WASTE SOURCE INVENTORY
TREATMENT PLANT – GENERAL INFORMATION

DATE OF VISIT 2-1-70
PLANT NAME: HIALEAH HOSPITAL
PLANT OWNER: HIALEAH HOSPITAL
ADDRESS 651 E. 25 STREET
TELEPHONE 576-8000 EXT. 3285
COLLECTION SYSTEM – TYPE: FOR HOSPITAL FACILITY
OWNER: HIALEAH HOSPITAL
ADDRESS: 651 E. 25 STREET
TELEPHONE 576-8000 EXT. 3285

DESIGN AVERAGE DESIGN FLOW: .09 MGD YEAR COMPLETED: 1964 - PLANT 1 1968 - PLANT 2
STREAM FLOW NA cfs DURATION NA days FREQUENCY NA Yrs
CONSTRUCTION COST NOT KNOWN
POPULATION SERVED 150 BEDS 1 STAFF

OPERATION ANNUAL COST NOT KNOWN
PERSONNEL MR. [illegible] MR. SZCZEPANSKI
LEVEL OF CERTIFICATION [illegible] – COMPLETION OF SHORT COURSES
CONDITION OF EQUIPMENT GOOD
OUTFALL TYPE NOT [illegible] SIZE NOT APPLICABLE LENGTH NOT APPLICABLE
DISCHARGED TO: [illegible] WATER COURSE MILEAGE: NOT APPLICABLE
LATITUDE NOT [illegible] LONGITUDE NOT APPLICABLE
TREATMENT (LIST UNITS IN ORDER, EXCLUDING SLUDGE TREATMENT & DISPOSAL)
[illegible] SETTLING [illegible] TANK, SECONDARY SEDIMENTATION
[illegible], DOSING TANK WITH CHLORINATION, DRAINFIELD

SLUDGE TREATMENT ANAEROBIC DIGESTION

DISPOSAL TRUCKED AWAY

REMARKS THE FACILITY CONSISTS OF THREE SEPARATE PLANTS EACH CAPABLE OF TREATING
[illegible] STD. (1) – EXTENDED AERATION
(2) – CONTACT STABILIZATION
(3) – CONTACT STABILIZATION
FLOW DATA [illegible] NO CHART

PREPARED BY: KW Schang

LOWER FLORIDA ESTUARY STUDY
DADE COUNTY WASTE SOURCE INVENTORY
TREATMENT PLANT FIELD SHEET

PLANT HIALEAH HOSPITAL

							AVERAGE
DATE ON		12-1-70					
TIME ON		1:30					
DATE OFF		12-1-70					
TIME OFF		2:15					
FLOW	START	FLOW METER					
	END	NOT					
	TOTAL	FUNCTIONING					
	24 hr. Flow Rate						
INF.	TEMP. ON	34° C	SAMPLED AT	1:50			
	PH - ON						
EFFLUENT	TEMP - ON	[illegible] C	SAMPLED AT	1:45			
	PH - ON						
	Cl. Residual	[illegible] PPM					
	CHLORINE-ON						
	CHLORINE-OFF						
	ON-OFF-lbs						

DATE	WASTE CHARACTERISTICS	PLANT OPERATION	AUTO. SAMPLER OPERATION	SAMPLES COLLECTED BY
12-1-70		FLOW METER CONTAINED NO CHARTS		SANDS
		EFFLUENT LOOKED GOOD		

LOWER FLORIDA ESTUARY STUDY
DADE COUNTY WASTE SOURCE INVENTORY
TREATMENT PLANT – SCHEMATIC DIAGRAM

PLANT HIALEAH HOSPITAL

DRAW COMPLETE FLOW DIAGRAM OF TREATMENT PLANT AND OUTFALL. LABEL EACH UNIT. SHOW LOCATIONS OF SAMPLE COLLECTION AND FLOW MEASURING DEVICES

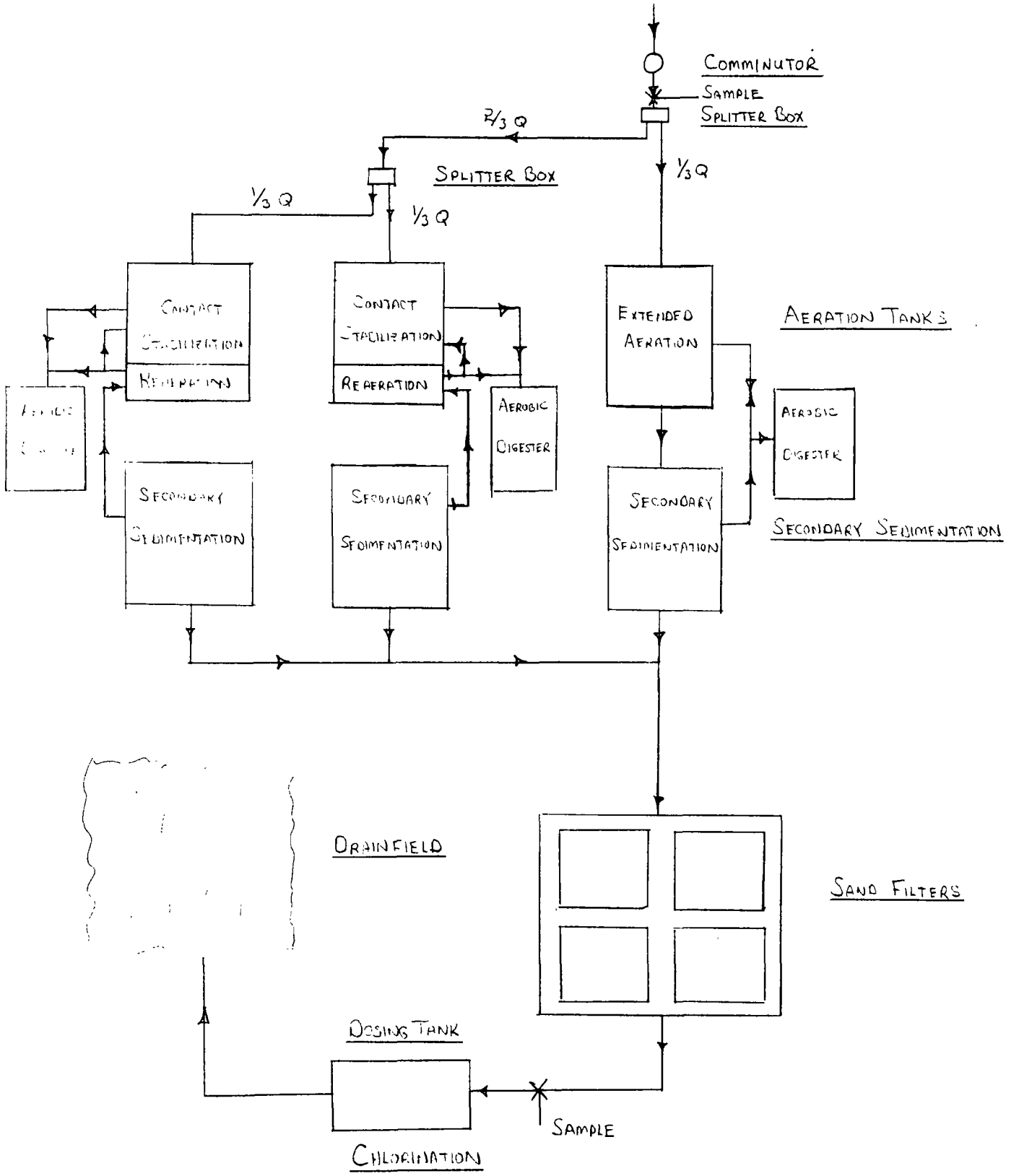

PREPARED BY: KW Schang

Sheet ___ of _____

LOWER FLORIDA ESTUARY STUDY
DADE COUNTY WASTE SOURCE INVENTORY
INFLUENT – EFFLUENT – DATA SUMMARY

PLANT Hialeah Hosp.

							AVERAGE
DATE - OFF		12/1/70					
FLOW - MGD		.09					
5 DAY B O D mg/l	INFLUENT	296					
	EFFLUENT	23					
	IN - OUT	273					
	% REMOVAL	92.2					
	LOAD-lbs/day	17.26					
C O D mg/l	INFLUENT	646					
	EFFLUENT	292					
	IN - OUT						
	% REMOVAL	54.8					
	LOAD -lbs/day	219.18					
T S S mg/l	INFLUENT	148					
	EFFLUENT	13					
	IN - OUT						
	% REMOVAL	91.2					
	LOAD- lbs/day	9.76					
V S S mg/l	INFLUENT	N.P.					
	EFFLUENT	N.P					
	IN - OUT						
	% REMOVAL						
	LOAD –lbs/day						
Settlable Solids ml/l	INFLUENT	2.5					
	EFFLUENT	0.0					
	IN - OUT						
	% REMOVAL	100					
T O C mg/l	INFLUENT	155					
	EFFLUENT	18					
	IN - OUT	137					
	% REMOVAL	88.4					
	LOAD - lbs/day	13.51					

INFLUENT BOD POPULATION EQUIVALENT = 1,312

EFFLUENT BOD POPULATION EQUIVALENT = 102

LOAD = FLOW (MGD) x EFFLUENT (mg/l) x 8.34 = lbs/day

Released
From The Desk Of
Michael V. Polito

Sheet____ of_____

LOWER FLORIDA ESTUARY STUDY
DADE COUNTY WASTE SOURCE INVENTORY
EFFLUENT DATA SUMMARY

PLANT Hialeah Hosp.

							AVERAGE or MEDIAN*
DATE - OFF		12/1/70					
FLOW - MGD		.09					
KTELDAHL NITROGEN as N	CONC.-mg/l	8.1					
	LOAD-lbs/day	6.08					
AMMONIA NITROGEN as N	CONC.-mg/l	9.0					
	LOAD-lbs/day	6.76					
ORGANIC NITROGEN as N	CONC.-mg/l	none					
	LOAD-lbs/day	–					
NO_2 -NO_3 as N	CONC.-mg/l	10.5					
	LOAD-lbs/day	7.88					
TOTAL PHOSPHORUS AS P	CONC.-mg/l	7.0					
	LOAD-lbs/day	5.25					
CHLORIDE	CONC.-mg/l	108					
TOTAL COLIFORM	CONC - MPN/100ml						
Fecal COLIFORM	CONC - MPN/100ml						

*Calculate Median for Total & Fecal Coliform Concentrations and Average for All Other Parameters.

Lower Florida Estuary Study
Operation Report on
Holiday Inn Sewage Treatment Plant
1111 S. Royal Poinciana Boulevard
Miami, Dade County, Florida
January 25, 1971

INTRODUCTION

The Holiday Inn Sewage Treatment Plant was inspected and sampled on December 7, 1970, by Kenneth Schang. Grab samples of the influent and effluent before chlorination were obtained. The treatment plant utilizes the extended aeration process and chlorination prior to discharge to the Miami Canal.

SUMMARY AND CONCLUSIONS

The system effected 90% + removal of BOD, COD and settleable solids. BOD concentration was 1.96 mg/l with an estimated .41 lb./day loading being placed on the receiving waterway based on the design flow of .025 MGD.

A 97.1% removal efficiency of settleable solids produced an effluent concentration of .1 ml/l.

Based on Dade County standards the treatment plant must be considered operating adequately.

Flow meter should be installed.

INVENTORY

1. Temporary surge tank, consisting of a septic tank truck.
2. Comminutor.
3. Aeration tanks, diffused air system.
4. Secondary sedimentation.
5. Chlorine contact, essentially utilizes a dosing tank.
6. Aerobic sludge digester.

RESULTS

BOD, COD and TOC effluent concentrations were 1.96, 46 and 16 mg/l respectively.

Treatment efficiency with respect to settleable solids removal was 97.1% with .1 ml/l being discharged to the Miami Canal.

The concentration of ammonia-N can be considered more significant in that 16.8 mg/l or an estimated 3.50 lbs./day as elemental nitrogen was present in the effluent sample. Remaining nutrients were considerably less prevelant; nitrate-nitrite as N concentration was 1.8 mg/l with a stream loading equivalent to .38 lbs./day based on design flow. Total phosphorous was present at 8.8 mg/l with an estimated loading of 1.83 lbs./day.

DISCUSSION

Through conversation with the plant operator, it was determined that a hydraulic problem inherent to the hotel being served by the treatment plant was the basis of past efficiency breakdowns. An early morning

surge prior to check-out time equal to several times the average design flow upset the treatment system and washed solids out of the plant. This was temporarily remedied by installation of a septic tank truck to act as a holding tank and a splitter box. Since installation, the effluent has been of consistent good quality and plans have been submitted to Dade County Pollution Control for a permanent concrete holding tank.

The appearance of the plant and condition of the mechanical equipment was good. Proper operation has resulted in a considerable improvement of plant efficiency.

The plant operator is James Barlow, who has a "C" classification.

In addition, verbal conversation with the operator yielded information that the present extended aeration treatment plant would be converted to contact stabilization in the near future.

Kenneth Schang

LOWER FLORIDA ESTUARY STUDY
DADE COUNTY WASTE SOURCE INVENTORY
TREATMENT PLANT – GENERAL INFORMATION

DATE OF VISIT 12-7-70
PLANT NAME: HOLIDAY INN
PLANT OWNER: HOLIDAY INN
ADDRESS 1111 S ROYAL POINCIANA BOULEVARD
TELEPHONE 835-1941
COLLECTION SYSTEM – TYPE: SERVES HOTEL
OWNER: HOLIDAY INN
ADDRESS: 1111 S. ROYAL POINCIANA BOULEVARD
TELEPHONE 835-1941

DESIGN AVERAGE DESIGN FLOW: .025 MGD YEAR COMPLETED:
STREAM FLOW — cfs | DURATION NO- KNOWN days FREQUENCY — Yrs
CONSTRUCTION COST 130,000
POPULATION SERVED 162 PERSONS (MONTHY AVERAGE)

OPERATION ANNUAL COST NOT KNOWN
PERSONNEL [illegible] OPERATOR PLUS MAINTENANCE PEOPLE
LEVEL OF CERTIFICATION [illegible]
CONDITION OF EQUIPMENT [illegible]
OUTFALL TYPE GRAVITY SIZE 8 INCH LENGTH 50 FEET
DISCHARGED TO: MIAMI CANAL WATER COURSE MILEAGE:
LATITUDE LONGITUDE
TREATMENT (LIST UNITS IN ORDER, EXCLUDING SLUDGE TREATMENT & DISPOSAL)
(SURGE TANK AND WET WELL) COMMINUTOR, AERATION TANK, SECONDARY SEDIMENTATION, CHLORINE CONTACT, CANAL

SLUDGE TREATMENT AEROBIC DIGESTION

DISPOSAL TRUCKED AWAY

REMARKS SURGE TANK TO BE CONSTRUCTED, SEPTIC TANK TRUCK IS USED AT PRESENT. TREATMENT HAS RECENTLY IMPROVED.
CRACK BETWEEN SECONDARY SEDIMENTATION AND AERATION TANK WAS RECENTLY SEALED.

PREPARED BY: K W Schaing

LOWER FLORIDA ESTUARY STUDY
DADE COUNTY WASTE SOURCE INVENTORY
TREATMENT PLANT FIELD SHEET

PLANT HOLIDAY INN

							AVERAGE
DATE ON		12-7-70					
TIME ON		1:30					
DATE OFF		12-7-70					
TIME OFF		2:00					
FLOW	START	No Flow					
	END	METER					
	TOTAL						
	24 hr. Flow Rate						
INF.	TEMP. ON	27°	SAMPLED AT	1:15			
	PH - ON	–					
EFFLUENT	TEMP - ON	27°	SAMPLED AT	1:20			
	PH - ON	–					
	Cl. Residual	10 PPM					
	CHLORINE-ON						
	CHLORINE-OFF						
	ON-OFF-lbs						

DATE	WASTE CHARACTERISTICS	PLANT OPERATION	AUTO. SAMPLER OPERATION	SAMPLES COLLECTED BY
12-7-70		GOOD - SURGE TANK ADDED TO REDUCE PEAK	–	SCHANG
		FLOW IMPACT PLANT SEEMS TO FUNCTION PROPERLY NOW.	–	

LOWER FLORIDA ESTUARY STUDY
DADE COUNTY WASTE SOURCE INVENTORY
TREATMENT PLANT – SCHEMATIC DIAGRAM

PLANT Holiday Inn

DRAW COMPLETE FLOW DIAGRAM OF TREATMENT PLANT AND OUTFALL. LABEL EACH UNIT. SHOW LOCATIONS OF SAMPLE COLLECTION AND FLOW MEASURING DEVICES

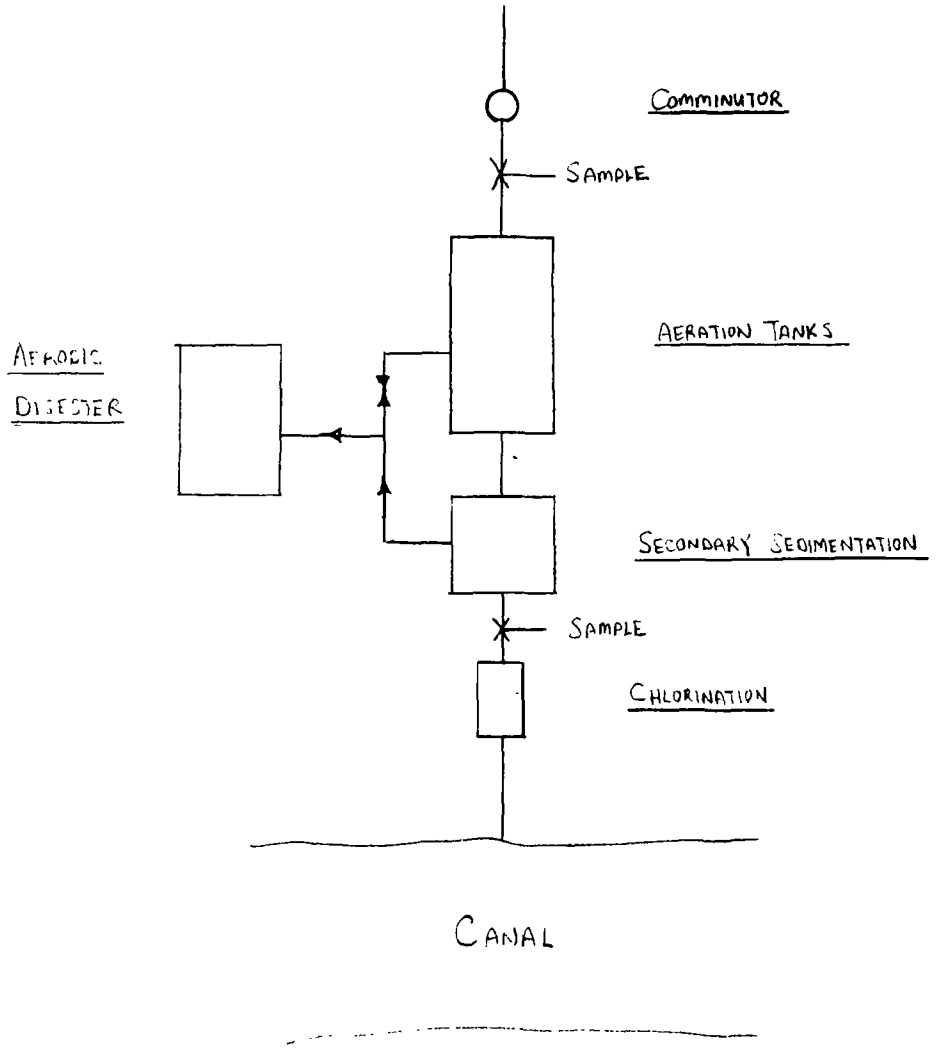

PREPARED BY: KW Schang

Sheet ___ of _____

LOWER FLORIDA ESTUARY STUDY
DADE COUNTY WASTE SOURCE INVENTORY
INFLUENT – EFFLUENT – DATA SUMMARY

PLANT Holiday Inn

							AVERAGE
DATE - OFF		12/7					
FLOW - MGD		.025					
5 DAY BOD mg/l	INFLUENT	194					
	EFFLUENT	1.96					
	IN - OUT	192.					
	% REMOVAL	98.7					
	LOAD-lbs/day	.41					
COD mg/l	INFLUENT	534					
	EFFLUENT	46					
	IN - OUT	488					
	% REMOVAL	91.4					
	LOAD -lbs/day	9.59					
TSS mg/l	INFLUENT	40					
	EFFLUENT	10.4					
	IN - OUT	29.6					
	% REMOVAL	74.0					
	LOAD- lbs/day	2.17					
VSS mg/l	INFLUENT	20					
	EFFLUENT	8					
	IN - OUT	12					
	% REMOVAL	60.0					
	LOAD –lbs/day	~~4.17~~	1.67 JCH				
Settlable Solids ml/l	INFLUENT	3.5					
	EFFLUENT	0.1					
	IN - OUT	3.4					
	% REMOVAL	97.1					
TOC mg/l	INFLUENT	118					
	EFFLUENT	16					
	IN - OUT	102					
	% REMOVAL	86.4					
	LOAD - lbs/day	3.34					

INFLUENT BOD POPULATION EQUIVALENT = 198

EFFLUENT BOD POPULATION EQUIVALENT = 2

LOAD = FLOW (MGD) x EFFLUENT (mg/l) x 8.34 = lbs/day

Note: Load based on design flow

From The Desk Of
Michael V. Polito

Sheet____ of_____

LOWER FLORIDA ESTUARY STUDY
DADE COUNTY WASTE SOURCE INVENTORY
EFFLUENT DATA SUMMARY

PLANT Holiday Inn.

							AVERAGE or MEDIAN*
DATE - OFF		12/7					
FLOW - MGD							
KTELDAHL NITROGEN as N	CONC.-mg/l	20.2					
	LOAD-lbs/day	4.21					
AMMONIA NITROGEN as N	CONC.-mg/l	16.8					
	LOAD-lbs/day	3.5					
ORGANIC NITROGEN as N	CONC.-mg/l	3.4					
	LOAD-lbs/day	.71					
NO_2 -NO_3 as N	CONC.-mg/l	1.8					
	LOAD-lbs/day	.38					
TOTAL PHOSPHORUS AS P	CONC.-mg/l	8.8					
	LOAD-lbs/day	1.83					
CHLORIDE	CONC.-mg/l	70					
TOTAL COLIFORM	CONC - MPN/100ml						
Fecal COLIFORM	CONC - MPN/100ml						

*Calculate Median for Total & Fecal Coliform Concentrations and Average for All Other Parameters.

Note: Load based on design flow.

Lower Florida Estuary Study
Operation Report on
Howard Johnson's Motel Sewage Treatment Plant
1980 N.W. Le Jeune Road
Miami, Dade County, Florida
March 15, 1971

INTRODUCTION

The Howard Johnson's Motel Sewage Treatment Plant was inspected and sampled on December 11, 1971 by Kenneth Schang. Grab samples of the influent and effluent after chlorination were obtained. The treatment plant is a Davco Contact Stabilization package unit with chlorination prior to discharge to the Tamiami Canal. Initial contact was made through Mr. Asay, motel manager.

SUMMARY AND CONCLUSIONS

BOD_5 removal efficiency equalled 97.9% producing an effluent concentration of 7.8 mg/l.

Total suspended solids were reduced 97.4% to 13 mg/l.

The chlorinating device was not operational at the time of inspection; a corresponding chlorine residual of 0 ppm was measured in the effluent at the point of discharge.

INVENTORY

1. Contact tank; diffused air system.
2. Secondary sedimentation.

3. Stabilization tank; diffused air system.

4. Chlorine contact.

5. Aerobic digester; diffused air system.

RESULTS

BOD_5, COD and TOC removal efficiencies equalled 97.9, 95.9 and 86.7% respectively with corresponding effluent concentrations of 7.8, 66 and 27 mg/l. The stream loadings were calculated as 1.63, 13.76 and 5.63 lbs. per day based on the design flow of .025 MGD.

The influent settleable solids value of 16 mg/l was reduced 99.4% to .1 ml/l. Total suspended solids removal efficiency was 97.4% with an effluent concentration of 13 mg/l and a stream loading of 2.71 lbs. per day.

Nutrient concentrations and loadings were as follows: ammonia nitrogen: 9.6 mg/l and 2.0 lbs. per day; nitrate-nitrite as N: 3.2 mg/l and .67 lbs. per day; total phosphorus: 1.7 mg/l and .35 lbs. per day.

DISCUSSION

The physical appearance of the treatment plant was poor, and the facility was in need of additional maintenance. One blower sounded to be near breakdown.

The chemical data is also deceiving. For the removal efficiencies to be as high as they are, the chlorine contact chamber would have to be

utilized as a tertiary settling tank. A considerable quantity of floc was flowing over the weir from the secondary settling tank. In addition, a significant quantity of pop-ups were present in the secondary settling tank, and the operation of the mechanical sludge scraper was questionable. Further evaluation of the problems existing with this treatment plant is recommended.

Mr. William Bryant, plant operator is licensed class "C".

Kenneth Schang

LOWER FLORIDA ESTUARY STUDY
DADE COUNTY WASTE SOURCE INVENTORY
TREATMENT PLANT – GENERAL INFORMATION

DATE OF VISIT 12-11-71
PLANT NAME: HOWARD JOHNSONS MOTEL
PLANT OWNER: HOWARD JOHNSONS MOTEL
ADDRESS 1980 NW LEJEUNE ROAD
TELEPHONE 635-8681
COLLECTION SYSTEM – TYPE: SERVES MOTEL
OWNER: HOWARD JOHNSONS MOTEL
ADDRESS: 1980 NW LE JEUNE ROAD
TELEPHONE 635-8681

DESIGN | AVERAGE DESIGN FLOW: .025 MGD YEAR COMPLETED:
STREAM FLOW – cfs | DURATION – days FREQUENCY – Yrs
CONSTRUCTION COST NOT KNOWN
POPULATION SERVED

OPERATION | ANNUAL COST NOT KNOWN
PERSONNEL WILLIAM BRYANT
LEVEL OF CERTIFICATION CLASS "C"
CONDITION OF EQUIPMENT FAIR
OUTFALL | TYPE GRAVITY SIZE 8 INCH LENGTH 50 FEET
DISCHARGED TO: TAMIAMI CANAL WATER COURSE MILEAGE: –
LATITUDE – LONGITUDE –
TREATMENT | (LIST UNITS IN ORDER, EXCLUDING SLUDGE TREATMENT & DISPOSAL)
CONTACT TANK, SECONDARY SEDIMENTATION, STABILIZATION, CHLORINATION, CANAL

SLUDGE | TREATMENT AEROBIC DIGESTER
DISPOSAL TRUCKED AWAY
REMARKS

PREPARED BY: KW Schang

LOWER FLORIDA ESTUARY STUDY
DADE COUNTY WASTE SOURCE INVENTORY
TREATMENT PLANT FIELD SHEET

PLANT Howard Johnsons Motel

							AVERAGE
DATE ON		12-11-71					
TIME ON		11:30					
DATE OFF		12-11-71					
TIME OFF		12:15					
FLOW	START						
	END						
	TOTAL						
	24 hr. Flow Rate						
INF.	TEMP. ON						
	PH - ON	—					
EFFLUENT	TEMP - ON						
	PH - ON	—					
	Cl. Residual	0 ppm					
	CHLORINE-ON						
	CHLORINE-OFF						
	ON-OFF-lbs						

DATE	WASTE CHARACTERISTICS	PLANT OPERATION	AUTO. SAMPLER OPERATION	SAMPLES COLLECTED BY
12-11-71	Extremely Dark and Turbid	Physical Appearance - Poor One Blower Sounded as if a breakdown was imminent	—	Schang

LOWER FLORIDA ESTUARY STUDY
DADE COUNTY WASTE SOURCE INVENTORY
TREATMENT PLANT – SCHEMATIC DIAGRAM

PLANT HOWARD JOHNSONS MOTEL

DRAW COMPLETE FLOW DIAGRAM OF TREATMENT PLANT AND OUTFALL. LABEL EACH UNIT. SHOW LOCATIONS OF SAMPLE COLLECTION AND FLOW MEASURING DEVICES

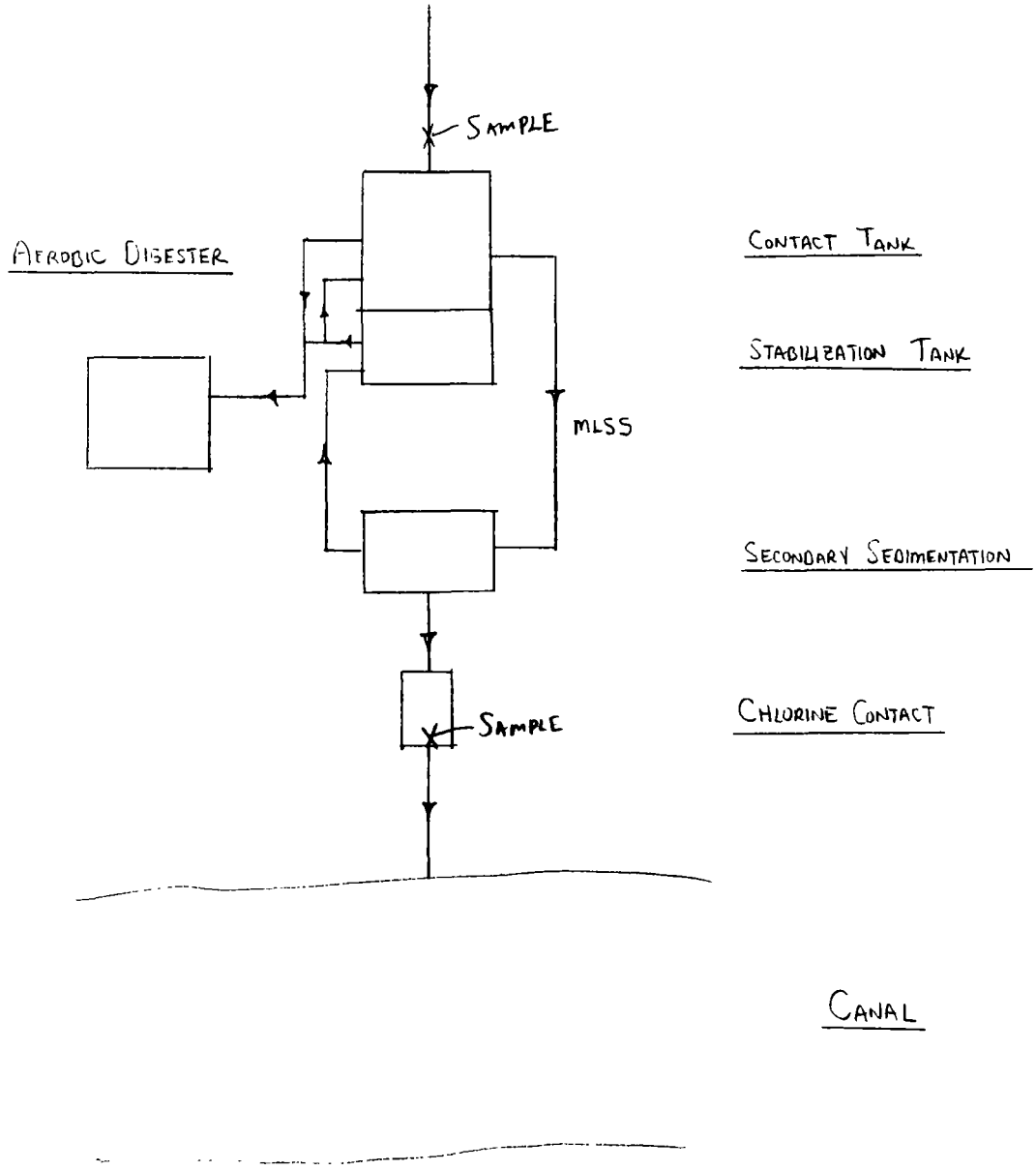

DANCO DIGEST STABILIZATION

PREPARED BY: KW Schang

LOWER FLORIDA ESTUARY STUDY
DADE COUNTY WASTE SOURCE INVENTORY
INFLUENT – EFFLUENT – DATA SUMMARY

Sheet ___ of _____

PLANT Howard Johnsons

							AVERAGE
DATE - OFF		12/1					
FLOW - MGD		.025					
5 DAY BOD mg/l	INFLUENT	375					
	EFFLUENT	7.8					
	IN - OUT						
	% REMOVAL	97.9					
	LOAD-lbs/day	1.63					
COD mg/l	INFLUENT	1460					
	EFFLUENT	66					
	IN - OUT						
	% REMOVAL	95.9					
	LOAD -lbs/day	13.76					
TSS mg/l	INFLUENT	500					
	EFFLUENT	13					
	IN - OUT						
	% REMOVAL	97.4					
	LOAD- lbs/day	2.71					
VSS mg/l	INFLUENT	430.5					
	EFFLUENT	12					
	IN - OUT						
	% REMOVAL	97.2					
	LOAD –lbs/day	2.5					
Settlable Solids ml/l	INFLUENT	16					
	EFFLUENT	.1					
	IN - OUT						
	% REMOVAL	99.4					
TOC mg/l	INFLUENT	202.5					
	EFFLUENT	27					
	IN - OUT						
	% REMOVAL	86.7					
	LOAD - lbs/day	5.63					

INFLUENT BOD POPULATION EQUIVALENT = 460 78.188

EFFLUENT BOD POPULATION EQUIVALENT = 10 1.63

LOAD = FLOW (MGD) x EFFLUENT (mg/l) x 8.34 = lbs/day

12-17-70

From The Desk Of
Michael V. Polito

Sheet____ of_____

LOWER FLORIDA ESTUARY STUDY
DADE COUNTY WASTE SOURCE INVENTORY
EFFLUENT DATA SUMMARY

PLANT Howard Johnson

DATE - OFF		12/11					AVERAGE or MEDIAN*
FLOW - MGD							
KTELDAHL NITROGEN as N	CONC.-mg/l	10.6					
	LOAD-lbs/day	2.21					
AMMONIA NITROGEN as N	CONC.-mg/l	9.6					
	LOAD-lbs/day	2					
ORGANIC NITROGEN as N	CONC.-mg/l	1.0					
	LOAD-lbs/day	.21					
NO_2 -NO_3 as N	CONC.-mg/l	3.2					
	LOAD-lbs/day	.67					
TOTAL PHOSPHORUS AS P	CONC.-mg/l	1.7					
	LOAD-lbs/day	.35					
CHLORIDE	CONC.-mg/l	119					
TOTAL COLIFORM	CONC - MPN/100ml						
Fecal COLIFORM	CONC - MPN/100ml						

*Calculate Median for Total & Fecal Coliform Concentrations and Average for All Other Parameters.

Lower Florida Estuary Study
Operation Report on
Jade Gardens Apartments Sewage Treatment Plant
S.W. 65th Avenue and U.S. 1
South Miami, Dade County, Florida
March 15, 1971

INTRODUCTION

The Jade Gardens Apartments Sewage Treatment Plant was inspected and sampled on January 11, 1971, by Kenneth Schang. Grab samples of the influent and effluent after chlorination were obtained. The treatment plant is a Davco Contact Stabilization package unit with chlorination prior to discharge to Snapper Creek Canal. Initial contact was made through the apartment manager.

SUMMARY AND CONCLUSIONS

Removal of BOD_5 was equal to 99.1% with an effluent concentration of 5 mg/l.

An influent suspended solids level of 4116 mg/l was reduced 99.7% to 14 mg/l.

At the time of inspection the chlorinating device was not operating properly and no residual was measurable in the effluent.

INVENTORY

1. Aeration tank; diffused air system.
2. Secondary sedimentation.
3. Stabilization tank; diffused air system.
4. Chlorination.
5. Aerobic digester; diffused air system.

DISCUSSION

(The height of water over the V-notch weir was too minimal to be effectively measured at the time of inspection). BOD_5, COD and TOC removal efficiencies were 99.1, 99.4 and 98% with corresponding effluent concentrations of 5, 49 and 22 mg/l respectively.

Total suspended solids were reduced 99.7% to 14 mg/l. An influent settleable solids level of 18 ml/l was reduced to .1 ml/l for a removal efficiency of 99.4%.

Nutrient effluent concentrations were as follows: ammonia nitrogen: 14.8 mg/l; nitrate-nitrite as N: .1 mg/l; total phosphorus: 9 mg/l.

RECOMMENDATIONS

Although the plant effected excellent removal efficiencies, the general physical condition was not good. More adequate maintenance is recommended.

A licensed operator does not maintain the treatment plant.

Kenneth Schang

LOWER FLORIDA ESTUARY STUDY
DADE COUNTY WASTE SOURCE INVENTORY
TREATMENT PLANT – GENERAL INFORMATION

DATE OF VISIT 1-11-71
PLANT NAME: JADE GARDENS APARTMENTS
PLANT OWNER: JADE GARDENS APARTMENTS
ADDRESS S.W. 65 AVE AND U.S. 1
TELEPHONE —
COLLECTION SYSTEM – TYPE: SERVES APARTMENT COMPLEX
OWNER: JADE GARDENS APARTMENTS
ADDRESS: S.W. 65 AVE AND U.S. 1
TELEPHONE —

DESIGN AVERAGE DESIGN FLOW: .0385 MGD YEAR COMPLETED: 1965
STREAM FLOW – cfs | DURATION – days FREQUENCY – Yrs
CONSTRUCTION COST Unknown
POPULATION SERVED 162 UNITS APPROXIMATELY 200 PEOPLE

OPERATION ANNUAL COST $2000 PER YEAR
PERSONNEL [illegible] PERSONNEL + PRECISION LABORATORY
LEVEL OF CERTIFICATION None
CONDITION OF EQUIPMENT FAIR

OUTFALL TYPE [illegible] SIZE 8 INCH LENGTH 100 FEET
DISCHARGED TO: SNAPPER CREEK CANAL WATER COURSE MILEAGE:
LATITUDE — LONGITUDE —

TREATMENT (LIST UNITS IN ORDER, EXCLUDING SLUDGE TREATMENT & DISPOSAL)
PRIMARY TANK, SECONDARY SEDIMENTATION, CHLORINATION, CANAL
DAVIS CONTACT STABILIZATION

SLUDGE TREATMENT AEROBIC DIGESTER

DISPOSAL [illegible]

REMARKS [illegible] SOLIDS INFLUENT

PREPARED BY: Kit Delaney

LOWER FLORIDA ESTUARY STUDY
DADE COUNTY WASTE SOURCE INVENTORY
TREATMENT PLANT FIELD SHEET

PLANT JADE GARDENS APARTMENTS

							AVERAGE
DATE ON		1-11-71					
TIME ON		[illegible]					
DATE OFF		[illegible]					
TIME OFF		[illegible]					
FLOW	START	.95° V-NOTCH WEIR					
	END	1/2 [illegible] DIGITAL					
	TOTAL						
	24 hr. Flow Rate						
INF.	TEMP. ON	[illegible]					
	PH - ON	[illegible]					
EFFLUENT	TEMP - ON	[illegible]					
	PH - ON						
	Cl. Residual						
	CHLORINE-ON						
	CHLORINE-OFF						
	ON-OFF-lbs						

DATE	WASTE CHARACTERISTICS	PLANT OPERATION	AUTO. SAMPLER OPERATION	SAMPLES COLLECTED BY
[illegible]	[illegible]	FOR [illegible] CHLORINE TUNSL [illegible]	—	[illegible]

LOWER FLORIDA ESTUARY STUDY
DADE COUNTY WASTE SOURCE INVENTORY
TREATMENT PLANT – SCHEMATIC DIAGRAM

PLANT JADE GARDENS APARTMENTS

DRAW COMPLETE FLOW DIAGRAM OF TREATMENT PLANT AND OUTFALL. LABEL EACH UNIT. SHOW LOCATIONS OF SAMPLE COLLECTION AND FLOW MEASURING DEVICES

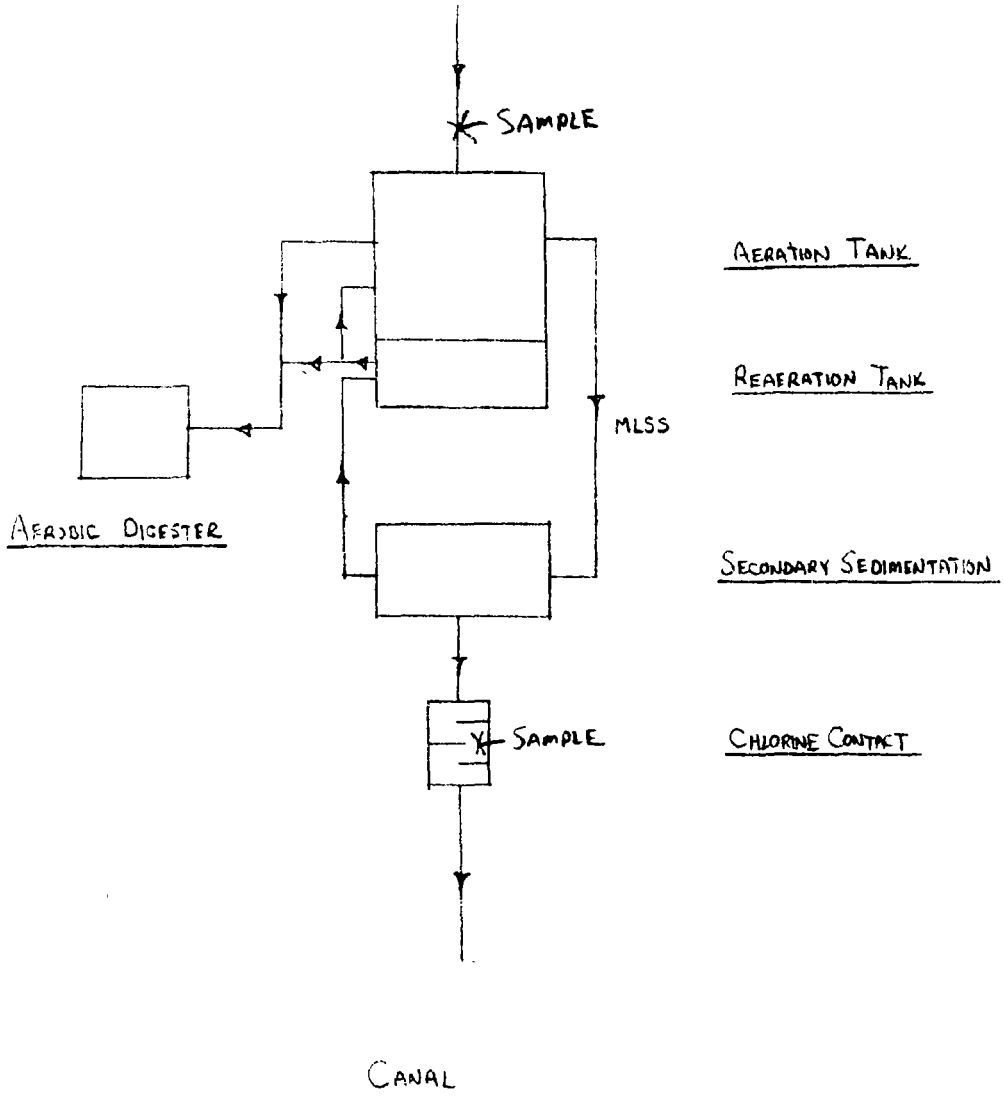

PREPARED BY: K W Schang

Sheet ___ of ___

LOWER FLORIDA ESTUARY STUDY
DADE COUNTY WASTE SOURCE INVENTORY
INFLUENT – EFFLUENT DATA SUMMARY

PLANT Jade Gardens Apts

							AVERAGE
DATE - OFF		1/11					
FLOW - MGD		—					
5 DAY B O D mg/l	INFLUENT	531					
	EFFLUENT	5					
	IN - OUT						
	% REMOVAL	99.1					
	LOAD-lbs/day	—					
C O D mg/l	INFLUENT	8671 OK					
	EFFLUENT	49					
	IN - OUT						
	% REMOVAL	99.4					
	LOAD -lbs/day	—					
T S S mg/l	INFLUENT	4116					
	EFFLUENT	14					
	IN - OUT						
	% REMOVAL	99.7					
	LOAD- lbs/day	—					
V S S mg/l	INFLUENT	3768					
	EFFLUENT	10					
	IN - OUT						
	% REMOVAL	99.7					
	LOAD –lbs/day	—					
Settlable Solids ml/l	INFLUENT	18					
	EFFLUENT	.1					
	IN - OUT						
	% REMOVAL	99.4					
T O C mg/l	INFLUENT	1125					
	EFFLUENT	22					
	IN - OUT						
	% REMOVAL	98.0					
	LOAD - lbs/day	—					

INFLUENT BOD POPULATION EQUIVALENT = _____

EFFLUENT BOD POPULATION EQUIVALENT = _____

LOAD = FLOW (MGD) x EFFLUENT (mg/l) x 8.34 = lbs/day

Released
From The Desk Of
Michael V. Polto

LOWER FLORIDA ESTUARY STUDY
DADE COUNTY WASTE SOURCE INVENTORY
EFFLUENT DATA SUMMARY

Sheet____ of_____

PLANT_____

							AVERAGE or MEDIAN*
DATE - OFF		1/1/					
FLOW - MGD							
KTELDAHL NITROGEN as N	CONC.-mg/l	15.1					
	LOAD-lbs/day	—					
AMMONIA NITROGEN as N	CONC.-mg/l	14.8					
	LOAD-lbs/day	—					
ORGANIC NITROGEN as N	CONC.-mg/l	0.3					
	LOAD-lbs/day	—					
NO_2 -NO_3 as N	CONC.-mg/l	0.1					
	LOAD-lbs/day	—					
TOTAL PHOSPHORUS A S P	CONC.-mg/l	9.0					
	LOAD-lbs/day	—					
CHLORIDE	CONC.-mg/l	48					
TOTAL COLIFORM	CONC - MPN/100ml						
Fecal COLIFORM	CONC - MPN/100ml						

*Calculate Median for Total & Fecal Coliform Concentrations and Average for All Other Parameters.

Lower Florida Estuary Study
Operation Report on
Kendale Lakes Sewage Treatment Plant
S.W. 147th Avenue and Kendale Drive
Kendale, Dade County, Florida
March 16, 1971

INTRODUCTION

The Kendale Lakes Sewage Treatment Plant was inspected and sampled on January 26 , 1971 by Kenneth Schang. Grab samples of the influent and effluent prior to chlorination were obtained. The treatment plant is a Walker-Contact Stabilization package unit with chlorination prior to canal discharge. The inspection was conducted in conjunction with a representative from Peninsula Utilities.

SUMMARY AND CONCLUSIONS

An influent BOD_5 value of 192 mg/l was reduced to 6 mg/l for a removal efficiency of 96.9%.

Total suspended solids efficiency equalled 89.1% and an influent settleable solids level of 6 ml/l was reduced to zero mg/l.

The chlorine residual was .5 ppm immediately prior to discharge.

INVENTORY

1. Comminutor in parallel with a bar rack.
2. Contact tank, diffused air system.
3. Secondary sedimentation.

4. Reaeration, stabilization; diffused air system.

5. Chlorination.

6. Aerobic sludge digester, diffused air system.

DISCUSSION

Removal efficiencies for BOD_5, COD and TOC were 96.9, 94.6 and 89.7 mg/l. This produced respective effluent concentrations of 6, 26 and 15 mg/l with corresponding stream loadings of 2.5 10.8 and 6.3 lbs. per day based on the estimated flow of .05 MGD.

Settleable solids were reduced 100% from an influent level of 6 ml/l. Total suspended solids removal efficiency equalled 89.1% with an effluent concentration of 10 mg/l and a stream loading of 4.2 lbs. per day.

The respective nutrient effluent concentrations and loadings were as follows: organic nitrogen: 1.2 mg/l and 0.5 lbs. per day; nitrate-nitrite as N: .78 mg/l and 0.3 lbs. per day; total phosphorus: 5.1 mg/l and 2.1 lbs. per day.

RECOMMENDATIONS

Although the treatment plant was significantly underloaded, adequate treatment efficiency was attained. No recommendations for operational improvement are necessary.

The physical appearance of the plant was good.

Operation is the responsibility of the General Waterworks Corporation.

Kenneth Schang

LOWER FLORIDA ESTUARY STUDY
DADE COUNTY WASTE SOURCE INVENTORY
TREATMENT PLANT – GENERAL INFORMATION

DATE OF VISIT 1-26-71
PLANT NAME: KENDALE LAKES
PLANT OWNER: PENINSULA UTILITIES
ADDRESS SW 147 AVENUE AND KENDALE DRIVE
TELEPHONE 444-7311
COLLECTION SYSTEM – TYPE: GRAVITY PLUS FORCE MAIN
OWNER: PENINSULA UTILITIES
ADDRESS: S.W. 147 AVENUE AND KENDALE DRIVE
TELEPHONE 444-7311

DESIGN AVERAGE DESIGN FLOW: .5 MGD YEAR COMPLETED: 1970

STREAM FLOW – cfs | DURATION – days FREQUENCY – Yrs

CONSTRUCTION COST (NOT KNOWN)

POPULATION SERVED APPROXIMATELY 5000 PEOPLE

OPERATION ANNUAL COST NOT DETERMINABLE

PERSONNEL PENINSULA UTILITIES STAFF

LEVEL OF CERTIFICATION CLASS "C"

CONDITION OF EQUIPMENT GOOD

OUTFALL TYPE GRAVITY SIZE 10 INCH LENGTH APPROXIMATELY 100 FEET

DISCHARGED TO: LINDGRIN ROAD CANAL WATER COURSE MILEAGE: –

LATITUDE – LONGITUDE –

TREATMENT (LIST UNITS IN ORDER, EXCLUDING SLUDGE TREATMENT & DISPOSAL)

COMMINUTOR IN PARALLEL WITH A BAR RACK, AERATION TANK, SECONDARY SEDIMENTATION, REAERATION, CHLORINATION, CANAL

CONTACT STABILIZATION - WALKER

SLUDGE TREATMENT AEROBIC DIGESTER

DISPOSAL TRUCKED AWAY

REMARKS OVERLOADED CONDITION

PREPARED BY: R.W. Schang

LOWER FLORIDA ESTUARY STUDY
DADE COUNTY WASTE SOURCE INVENTORY
TREATMENT PLANT FIELD SHEET

PLANT Kendale Lakes

							AVERAGE
DATE ON		1-26-71					
TIME ON		10:00					
DATE OFF		1-26-71					
TIME OFF		10.45					
FLOW	START	.22 MGD					
	END						
	TOTAL						
	24 hr. Flow Rate						
INF.	TEMP. ON	75° F					
	PH - ON	-					
EFFLUENT	TEMP - ON	72° F					
	PH - ON	-					
	Cl. Residual	.5 PPM					
	CHLORINE-ON						
	CHLORINE-OFF						
	ON-OFF-lbs						

DATE	WASTE CHARACTERISTICS	PLANT OPERATION	AUTO. SAMPLER OPERATION	SAMPLES COLLECTED BY
1-26-71	AVERAGE	GOOD - CLEAR EFFLUENT	-	CHANG

LOWER FLORIDA ESTUARY STUDY
DADE COUNTY WASTE SOURCE INVENTORY
TREATMENT PLANT – SCHEMATIC DIAGRAM

PLANT Kendale Lakes

DRAW COMPLETE FLOW DIAGRAM OF TREATMENT PLANT AND OUTFALL. LABEL EACH UNIT. SHOW LOCATIONS OF SAMPLE COLLECTION AND FLOW MEASURING DEVICES

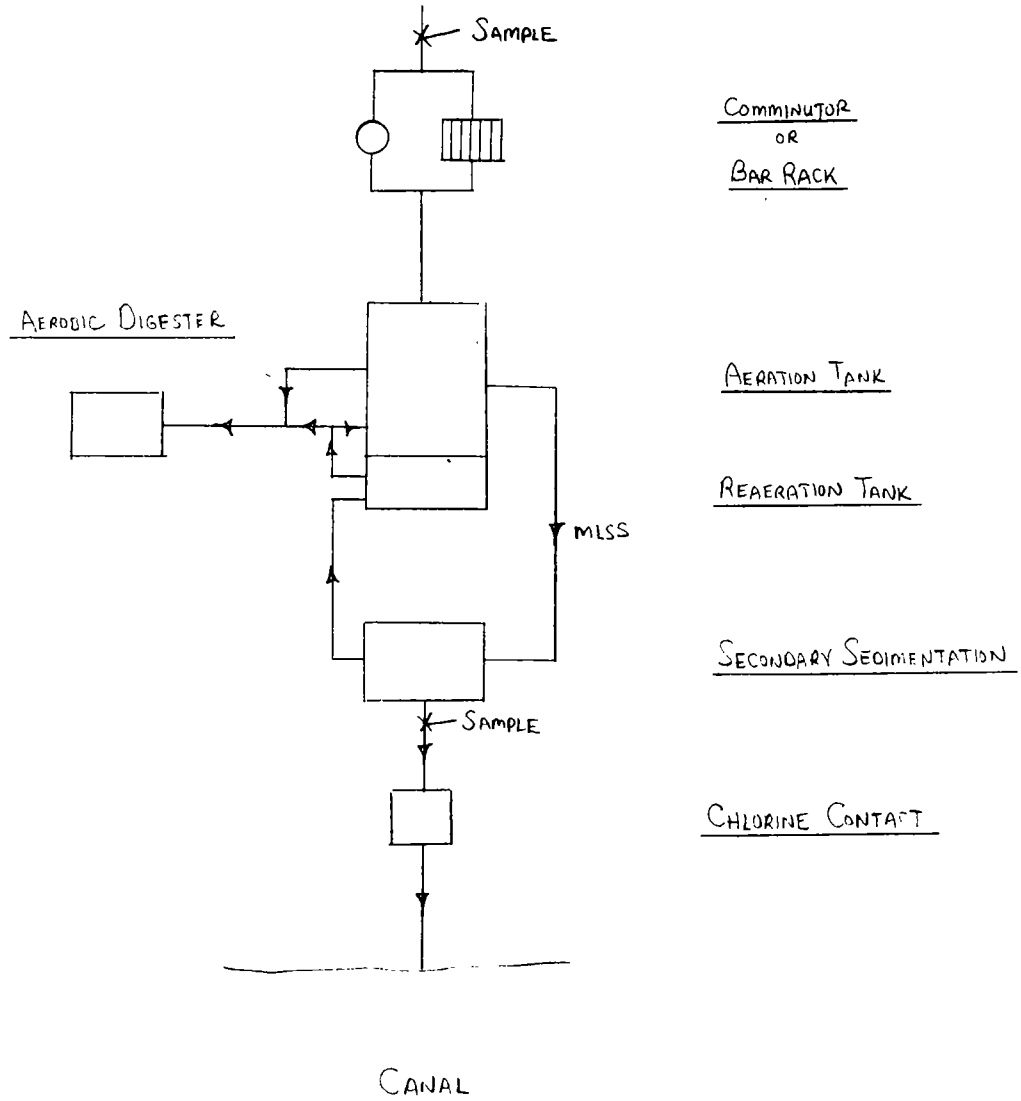

PREPARED BY: KW Schang

Sheet ___ of _____

LOWER FLORIDA ESTUARY STUDY
DADE COUNTY WASTE SOURCE INVENTORY
INFLUENT – EFFLUENT / – DATA SUMMARY

PLANT Kendale Lakes

							AVERAGE
DATE - OFF		1/26					
FLOW - MGD		0.05 *					
5 DAY B O D mg/l	INFLUENT	192					
	EFFLUENT	6					
	IN - OUT						
	% REMOVAL	96.9					
	LOAD-lbs/day	2.5					
C O D mg/l	INFLUENT	480					
	EFFLUENT	26					
	IN - OUT						
	% REMOVAL	94.6					
	LOAD -lbs/day	10.8					
T S S mg/l	INFLUENT	92					
	EFFLUENT	10					
	IN - OUT						
	% REMOVAL	89.1					
	LOAD- lbs/day	4.2					
V S S mg/l	INFLUENT	68					
	EFFLUENT	6					
	IN - OUT						
	% REMOVAL	91.2					
	LOAD –lbs/day	2.5					
Settlable Solids ml/l	INFLUENT	6					
	EFFLUENT	0					
	IN - OUT						
	% REMOVAL	100					
T O C mg/l	INFLUENT	145					
	EFFLUENT	15					
	IN - OUT						
	% REMOVAL	89.7					
	LOAD - lbs/day	6.3					

* Estimated flow

INFLUENT BOD POPULATION EQUIVALENT = _____

EFFLUENT BOD POPULATION EQUIVALENT = _____

LOAD = FLOW (MGD) x EFFLUENT (mg/l) x 8.34 = lbs/day

From The Desk Of Michael V. Polito

Sheet____ of_____

LOWER FLORIDA ESTUARY STUDY
DADE COUNTY WASTE SOURCE INVENTORY
EFFLUENT DATA SUMMARY

PLANT KENDALE LAKES

DATE - OFF		1/26	1/27				AVERAGE or MEDIAN*
FLOW - MGD		0.05					
KTELDAHL NITROGEN as N	CONC.-mg/l	1.2					
	LOAD-lbs/day	0.5					
AMMONIA NITROGEN as N	CONC.-mg/l	0.04					
	LOAD-lbs/day	<.1					
ORGANIC NITROGEN as N	CONC.-mg/l	1.16					
	LOAD-lbs/day	0.5					
NO_2 -NO_3 as N	CONC.-mg/l	0.78					
	LOAD-lbs/day	0.3					
TOTAL PHOSPHORUS AS P	CONC.-mg/l	5.1					
	LOAD-lbs/day	2.1					
CHLORIDE	CONC.-mg/l	28					
TOTAL COLIFORM	CONC - MPN/100ml						
Fecal COLIFORM	CONC - MPN/100ml						

*Calculate Median for Total & Fecal Coliform Concentrations and Average for All Other Parameters.

Lower Florida Estuary Study
Operation Report on
Kendall Complex Sewage Treatment Plant
8500 S.W. 107th Avenue
Kendall, Dade County, Florida
March 16, 1971

INTRODUCTION

The Kendall Complex Sewage Treatment Plant was inspected and sampled on February 2, 1971, by Kenneth Schang. Grab samples of the influent and effluent prior to chlorination were obtained. The treatment plant utilizes an Imhoff tank, trickling filter, oxidation pond and chlorination prior to discharge to a field. The inspection was conducted in conjunction with a member of the Dade County maintenance staff.

SUMMARY AND CONCLUSIONS

BOD_5 removal equalled 85% with an effluent concentration of 47 mg/l.

There was an increase in the total suspended solids influent value of 8 mg/l based on influent and effluent measurements of 90 and 98 mg/l respectively.

A chlorine residual of 2 ppm was measured in the effluent immediately prior to discharge.

INVENTORY

1. Bar rack.
2. Imhoff tank.
3. Trickling filter.
4. Oxidation ponds.
5. Chlorination.

DISCUSSION

(Because of known low flow conditions and the absence of any flow measuring devices, loading calculations cannot be considered valid when based on the average design flow.)

BOD_5, COD and TOC removal efficiencies were 85, 75 and 45% respectively with corresponding effluent concentrations of 47, 177 and 85 mg/l.

The settleable solids removal efficiency equalled 60% with .2 ml/l being measured in the effluent. The influent total suspended solids level of 90 mg/l increased to 98 mg/l in the effluent.

Nutrient effluent concentrations were relatively insignificant: ammonia nitrogen: 4.98 mg/l; nitrate-nitrite as N: .01 mg/l; total phosphorus: 2.3 mg/l.

RECOMMENDATIONS

The physical appearance of the treatment plant was good with all mechanical units operational.

The facility is maintained by a Dade County employee, licensed class "C", and a regular maintenance crew.

Kenneth Schang

LOWER FLORIDA ESTUARY STUDY
DADE COUNTY WASTE SOURCE INVENTORY
TREATMENT PLANT – GENERAL INFORMATION

DATE OF VISIT 2-2-71
PLANT NAME: KENDALL COMPLEX
PLANT OWNER: DADE COUNTY
ADDRESS 8500 S.W 107 AVENUE
TELEPHONE –
COLLECTION SYSTEM – TYPE: GRAVITY
OWNER: DADE COUNTY
ADDRESS: 8500 S.W. 107 AVENUE
TELEPHONE –

DESIGN | AVERAGE DESIGN FLOW: .135 MGD YEAR COMPLETED: 1957
STREAM FLOW NA cfs | DURATION NA days FREQUENCY NA Yrs
CONSTRUCTION COST NOT KNOWN
POPULATION SERVED NOT KNOWN

OPERATION | ANNUAL COST NOT KNOWN
PERSONNEL STAFF OF DADE COUNTY PUBLIC WORKS
LEVEL OF CERTIFICATION CLASS "C"
CONDITION OF EQUIPMENT GOOD

OUTFALL | TYPE GRAVITY SIZE 8 INCH LENGTH 100 FEET
DISCHARGED TO: A FIELD WATER COURSE MILEAGE: NA
LATITUDE – LONGITUDE –

TREATMENT | (LIST UNITS IN ORDER, EXCLUDING SLUDGE TREATMENT & DISPOSAL)
BAR SCREENS, IMHOFF TANK, TRICKLING FILTER, SECONDARY SEDIMENTATION, OXIDATION PONDS, CHLORINATION

SLUDGE | TREATMENT IMHOFF TANK - ANAEROBIC DIGESTION

DISPOSAL TRUCKED AWAY

REMARKS

PREPARED BY: K W Schang

LOWER FLORIDA ESTUARY STUDY
DADE COUNTY WASTE SOURCE INVENTORY
TREATMENT PLANT FIELD SHEET

PLANT KENDALL COMPLEX

							AVERAGE
DATE ON		2-2-71					
TIME ON		1:30					
DATE OFF		2-2-71					
TIME OFF		2:15					
FLOW	START	No FLOW METER					
	END	NO METER					
	TOTAL						
	24 hr. Flow Rate						
INF.	TEMP. ON	75° C					
	PH - ON	-					
EFFLUENT	TEMP - ON	72° C					
	PH - ON	-					
	Cl. Residual	2 PPM					
	CHLORINE-ON						
	CHLORINE-OFF						
	ON-OFF-lbs						

DATE	WASTE CHARACTERISTICS	PLANT OPERATION	AUTO. SAMPLER OPERATION	SAMPLES COLLECTED BY
2-2-71	AVERAGE	GOOD	-	SCHANG
	EFFLUENT - CONTAINS ALAE			

LOWER FLORIDA ESTUARY STUDY
DADE COUNTY WASTE SOURCE INVENTORY
TREATMENT PLANT – SCHEMATIC DIAGRAM

PLANT KENDALL COMPLEX

DRAW COMPLETE FLOW DIAGRAM OF TREATMENT PLANT AND OUTFALL. LABEL EACH UNIT. SHOW LOCATIONS OF SAMPLE COLLECTION AND FLOW MEASURING DEVICES

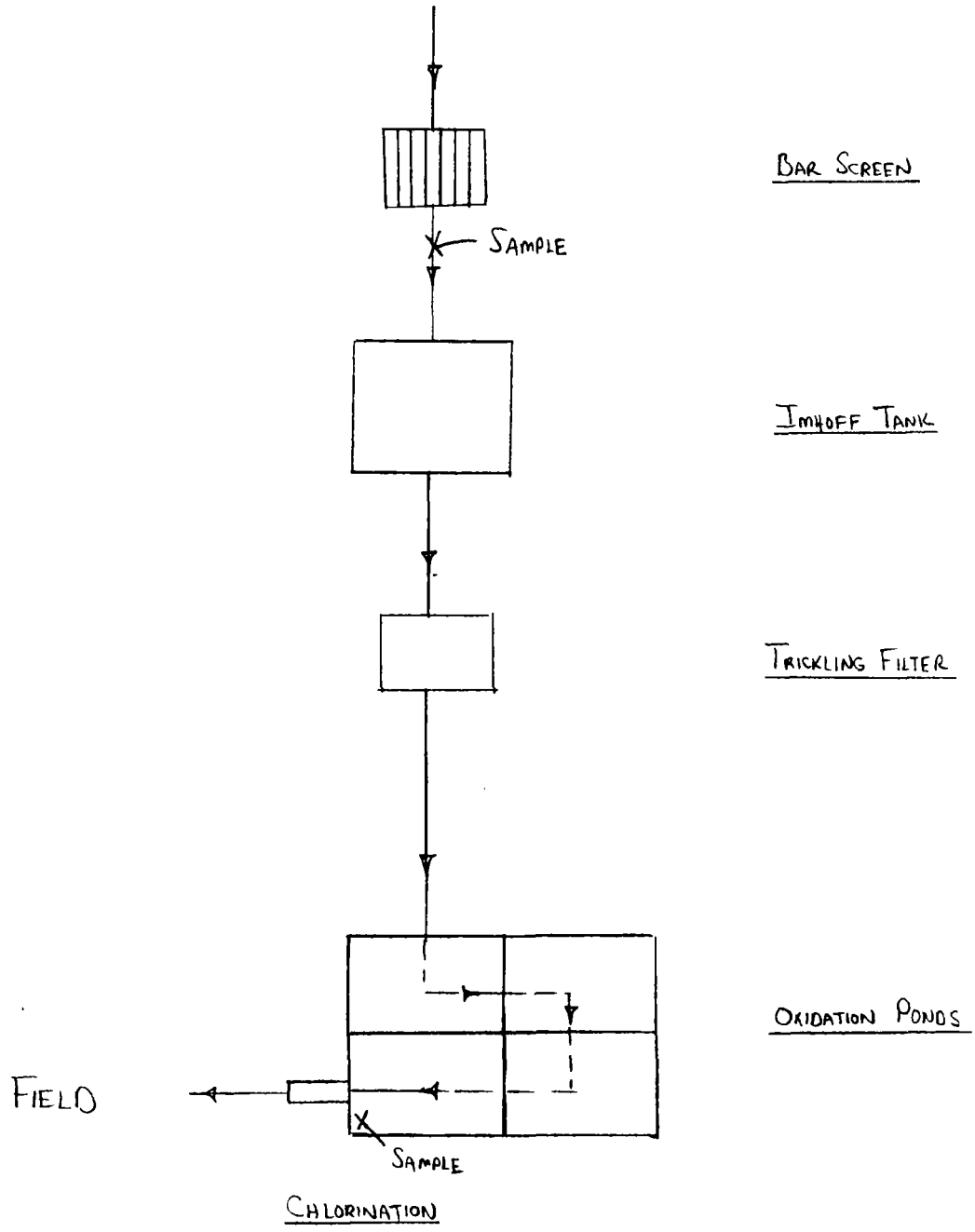

PREPARED BY:

LOWER FLORIDA ESTUARY STUDY
DADE COUNTY WASTE SOURCE INVENTORY
INFLUENT – EFFLUENT DATA SUMMARY

Sheet ___ of ___

PLANT Kendall [redacted] COMPLEX

							AVERAGE
DATE - OFF		2-3-71					
FLOW - MGD		—					
5 DAY BOD mg/l	INFLUENT	313					313
	EFFLUENT	47					47
	IN - OUT						
	% REMOVAL	85					85
	LOAD-lbs/day	—					
COD mg/l	INFLUENT	714					714
	EFFLUENT	177					177
	IN - OUT						
	% REMOVAL	75					75
	LOAD -lbs/day	—					
TSS mg/l	INFLUENT	90					90
	EFFLUENT	98					98
	IN - OUT						
	% REMOVAL						
	LOAD- lbs/day	—					
VSS mg/l	INFLUENT	66					66
	EFFLUENT	90					90
	IN - OUT						
	% REMOVAL						
	LOAD -lbs/day	—					
Settlable Solids ml/l	INFLUENT	0.5					0.5
	EFFLUENT	0.2					0.2
	IN - OUT						
	% REMOVAL	60					60
TOC mg/l	INFLUENT	155					155
	EFFLUENT	85					85
	IN - OUT						
	% REMOVAL	45					45
	LOAD - lbs/day	—					

INFLUENT BOD POPULATION EQUIVALENT = ___

EFFLUENT BOD POPULATION EQUIVALENT = ___

LOAD = FLOW (MGD) x EFFLUENT (mg/l) x 8.34 = lbs/day

Released

From The Desk Of
Michael V. Polito

LOWER FLORIDA ESTUARY STUDY
DADE COUNTY WASTE SOURCE INVENTORY
EFFLUENT DATA SUMMARY

Sheet____ of_____

PLANT Kendall Complex

							AVERAGE or MEDIAN*
DATE - OFF		2/3					
FLOW - MGD							
KTELDAHL NITROGEN as N	CONC.-mg/l	8.5					8.5
	LOAD-lbs/day	—					
AMMONIA NITROGEN as N	CONC.-mg/l	4.98					4.98
	LOAD-lbs/day	—					
ORGANIC NITROGEN as N	CONC.-mg/l	3.52					
	LOAD-lbs/day						
NO_2 -NO_3 as N	CONC.-mg/l	0.01					0.01
	LOAD-lbs/day	—					
TOTAL PHOSPHORUS AS P	CONC.-mg/l	2.3					2.3
	LOAD-lbs/day	—					
CHLORIDE	CONC.-mg/l	55					55
TOTAL COLIFORM	CONC - MPN/100ml						
Fecal COLIFORM	CONC - MPN/100ml						

*Calculate Median for Total & Fecal Coliform Concentrations and Average for All Other Parameters.

Lower Florida Estuary Study
King's Inn Hotel Sewage Treatment Plant
500 Deer Run
Miami Springs, Dade County, Florida
March 16, 1971

INTRODUCTION

The King's Inn Hotel Sewage Treatment Plant was inspected and sampled on December 7, 1970 by Kenneth Schang. Grab samples of the influent and effluent after chlorination were obtained. The treatment plant is a Chicago Pump Rapid Bloc package plant which utilizes the complete mix process and chlorination prior to discharge to a drainfield. The inspection was conducted in conjunction with Mr. James Binger, maintenance supervisor.

RESULTS

Treatment efficiencies for the critical parameters were adequate. BOD_5 removal was 84% with 11.5 mg/l being measured in the effluent.

The influent settleable solids level of 2.5 ml/l was reduced 100%. Total suspended solids removal efficiency was 48%, leaving 26 mg/l in the effluent.

A chlorine residual of 5 ppm was measured in the final effluent immediately prior to discharge.

INVENTORY

1. Comminutor.
2. Surge tank.

3. Aeration tank; diffused air system.

4. Secondary sedimentation.

5. Chlorine contact.

6. Dosing tank.

7. Aerobic digester; diffused air system.

RESULTS

BOD_5, COD and TOC removal efficiencies were 84, 76.8 and 44% respectively with estimated loadings of 1.92, 11.51 and 4.67 lbs. per day based on the average design flow.

Settleable solids were removed 100%, while the efficiency for suspended solids was 48%. This produced an effluent concentration of 26 mg/l and an estimated loading of 4.34 lbs. per day.

Ammonia nitrogen, nitrate-nitrite as N and total phosphorus effluent concentrations were measured at 11.2, 13 and 5.2 mg/l producing loadings of 1.87, 2.17 and .87 lbs. per day.

DISCUSSION

Based on the chemical data and visual inspection, only one recommendation is necessary. Chlorine is added drop-wise and the rate of flow is controlled by a valve. This should be replaced with a liquid chlorinating device to insure proper disinfection.

The treatment plant is operated by the maintenance staff of the hotel. None of the personnel are certified.

Kenneth Schang

LOWER FLORIDA ESTUARY STUDY
DADE COUNTY WASTE SOURCE INVENTORY
TREATMENT PLANT – GENERAL INFORMATION

DATE OF VISIT 12-7-70
PLANT NAME: KINGS INN
PLANT OWNER: KINGS INN
ADDRESS 500 DEER RUN
TELEPHONE 885-1911
COLLECTION SYSTEM – TYPE: SERVES HOTEL
OWNER: KINGS INN
ADDRESS: 500 DEER RUN
TELEPHONE 885-1911

DESIGN AVERAGE DESIGN FLOW: .02 MGD YEAR COMPLETED: 1967
STREAM FLOW NA cfs DURATION NA days FREQUENCY NA Yrs
CONSTRUCTION COST Not Known
POPULATION SERVED 117 Rooms

OPERATION ANNUAL COST Not Known
PERSONNEL Jim Smith
LEVEL OF CERTIFICATION None
CONDITION OF EQUIPMENT Good

OUTFALL TYPE Not Applicable SIZE Not Applicable LENGTH Not Applicable
DISCHARGED TO: Crainfield WATER COURSE MILEAGE: Not Applicable
LATITUDE Not Applicable LONGITUDE Not Applicable

TREATMENT (LIST UNITS IN ORDER, EXCLUDING SLUDGE TREATMENT & DISPOSAL)

Comminutor, Aeration Tank, Secondary Sedimentation, Chlorine Contact, Dosing Tank, Drainfield

Surge Tank also provided.

SLUDGE TREATMENT Aerobic Digestion

DISPOSAL Trucked Away

REMARKS Chicago Pump – Complete Mix, Rapid Bloc

PREPARED BY: KW Chang

LOWER FLORIDA ESTUARY STUDY
DADE COUNTY WASTE SOURCE INVENTORY
TREATMENT PLANT FIELD SHEET

PLANT KINGS INN

							AVERAGE
DATE ON		12-7-70					
TIME ON		12:15					
DATE OFF		12-7-70					
TIME OFF		12:30					
FLOW	START	NO FLOW					
	END	METER					
	TOTAL						
	24 hr. Flow Rate						
INF.	TEMP. ON	21°C	SAMPLED AT	12:30			
	PH - ON	--					
EFFLUENT	TEMP - ON	21°C	SAMPLED AT	12:35			
	PH - ON	-					
	Cl. Residual	5 PPM					
	CHLORINE-ON						
	CHLORINE-OFF						
	ON-OFF-lbs						

DATE	WASTE CHARACTERISTICS	PLANT OPERATION	AUTO. SAMPLER OPERATION	SAMPLES COLLECTED BY
12-7-70	CLEAN	GOOD ON THE AVERAGE LIQUID CHLORINE IS ADDED DROPWISE, THE DEVICE WAS NOT WORKING AT START OF INSPECTION.	-	SCHANG

LOWER FLORIDA ESTUARY STUDY
DADE COUNTY WASTE SOURCE INVENTORY
TREATMENT PLANT – SCHEMATIC DIAGRAM

PLANT KINGS INN

DRAW COMPLETE FLOW DIAGRAM OF TREATMENT PLANT AND OUTFALL. LABEL EACH UNIT. SHOW LOCATIONS OF SAMPLE COLLECTION AND FLOW MEASURING DEVICES

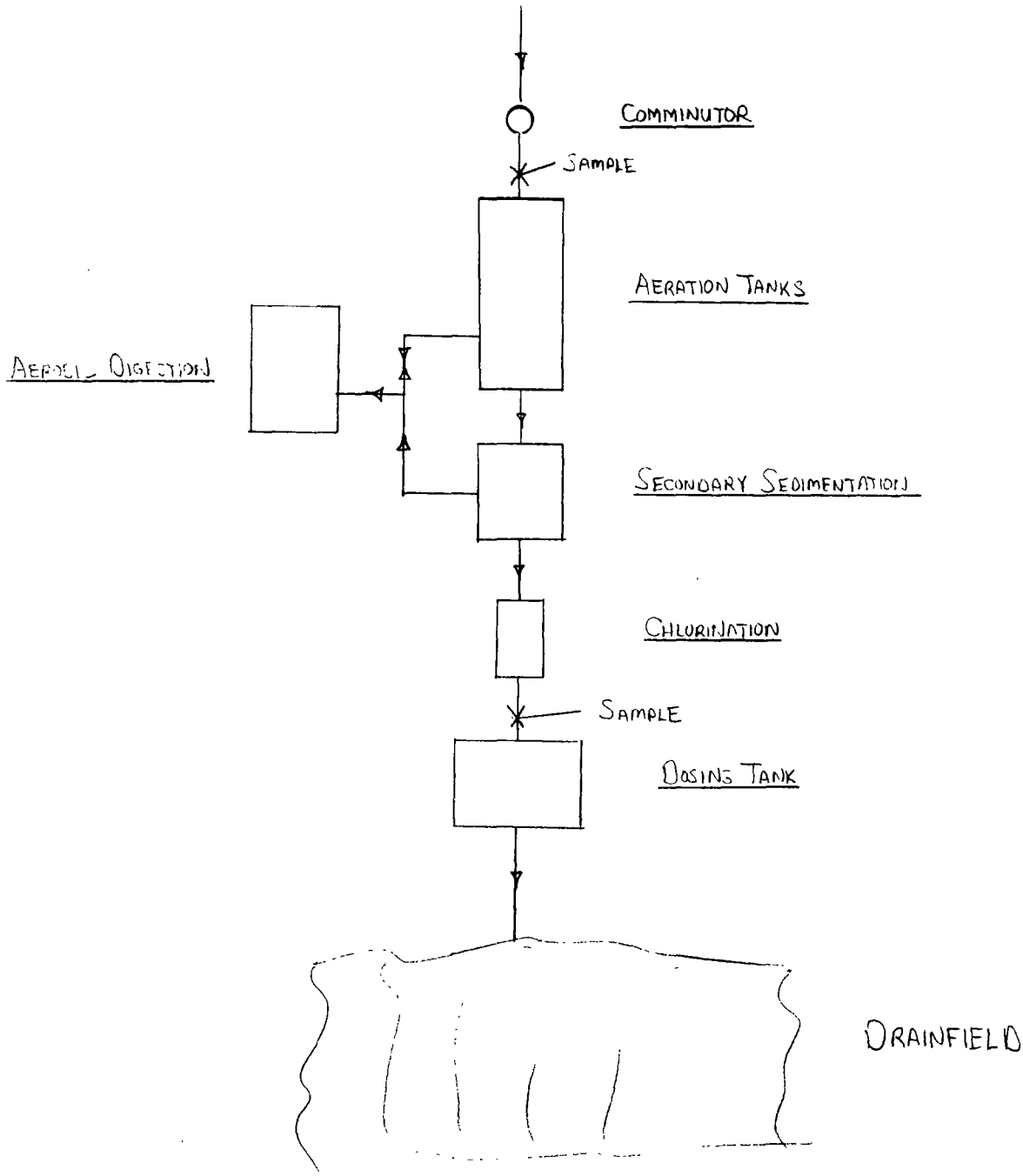

PREPARED BY: KW Schang

LOWER FLORIDA ESTUARY STUDY

Sheet ___ of _____

DADE COUNTY WASTE SOURCE INVENTORY

INFLUENT – EFFLUENT – DATA SUMMARY

PLANT Kings Inn

							AVERAGE
DATE - OFF		12/7					
FLOW - MGD		.02					
5 DAY B O D mg/l	INFLUENT	71.9					
	EFFLUENT	11.5					
	IN - OUT						
	% REMOVAL	84.0					
	LOAD-lbs/day	1.92					
C O D mg/l	INFLUENT	297					
	EFFLUENT	69					
	IN - OUT						
	% REMOVAL	76.8					
	LOAD -lbs/day	11.51					
T S S mg/l	INFLUENT	50					
	EFFLUENT	26					
	IN - OUT						
	% REMOVAL	48.0					
	LOAD- lbs/day	4.34					
V S S mg/l	INFLUENT	22					
	EFFLUENT	3					
	IN - OUT						
	% REMOVAL	86.4					
	LOAD –lbs/day	.5					
Settlable Solids ml/l	INFLUENT	2.5					
	EFFLUENT	nil					
	IN - OUT						
	% REMOVAL	100					
T O C mg/l	INFLUENT	50					
	EFFLUENT	28					
	IN - OUT						
	% REMOVAL	44.0					
	LOAD - lbs/day	4.67					

INFLUENT BOD POPULATION EQUIVALENT = 69

EFFLUENT BOD POPULATION EQUIVALENT = 11

LOAD = FLOW (MGD) x EFFLUENT (mg/l) x 8.34 = lbs/day

From The Desk Of
Michael V. Polito

Sheet___ of_____

LOWER FLORIDA ESTUARY STUDY
DADE COUNTY WASTE SOURCE INVENTORY
EFFLUENT DATA SUMMARY

PLANT Kings Inn.

							AVERAGE or MEDIAN*
DATE - OFF		12/7					
FLOW - MGD		.02					
KTELDAHL NITROGEN as N	CONC.-mg/l	14.0					
	LOAD-lbs/day	2.34					
AMMONIA NITROGEN as N	CONC.-mg/l	11.2					
	LOAD-lbs/day	1.87					
ORGANIC NITROGEN as N	CONC.-mg/l	2.8					
	LOAD-lbs/day	.47					
NO_2 -NO_3 as N	CONC.-mg/l	13.0					
	LOAD-lbs/day	2.17					
TOTAL PHOSPHORUS AS P	CONC.-mg/l	5.2					
	LOAD-lbs/day	.87					
CHLORIDE	CONC.-mg/l	62					
TOTAL COLIFORM	CONC - MPN/100ml						
Fecal COLIFORM	CONC - MPN/100ml						

*Calculate Median for Total & Fecal Coliform Concentrations and Average for All Other Parameters.

Lower Florida Estuary Study
Operation Report on
Lakeview Garden Apartments Sewage Treatment Plant
7711 Miller Drive
Westwood Lakes, Dade County, Florida
March 15, 1971

INTRODUCTION

The Lakeview Garden Apartments Sewage Treatment Plant was inspected and sampled on January 12, 1971, by Kenneth Schang. Grab samples of the influent and effluent prior to chlorination were obtained. The treatment plant is a W & S Contact Stabilization package unit with chlorination prior to discharge to a drainfield. Initial contact was made through the apartment manager.

SUMMARY AND CONCLUSIONS

Removal of BOD_5 equalled 89% leaving an effluent concentration of 24 mg/l.

There were no settleable solids measured in the effluent. Total suspended solids effluent concentration equalled 26 mg/l indicating a removal efficiency of 63.9%. The chlorine residual measured in the dosing tank was .1 ppm.

INVENTORY

1. Contact tank; diffused air system.
2. Secondary sedimentation.
3. Reaeration tank; diffused air system.
4. Dosing tank plus chlorination.
5. Aerobic digester; diffused air system.

RESULTS

Removal of BOD_5, COD and TOC was 89, 94.3 and 94.8% respectively. The corresponding estimated stream loadings were 6, 8.5 and 3.25 lbs. per day based on the average design flow of .03 MGD.

Settleable solids removal efficiency was 100%; however, a total suspended solids estimated loading of 6.5 lbs. per day was produced after 63.9% of the influent value was removed.

Ammonia nitrogen, nitrate-nitrite as N, and total phosphorus estimated loadings were calculated at .78, .55 and 2.8 lbs. per day.

DISCUSSION

One recommendation is that the present chlorine system be substituted by an automatic feed chlorinator to insure proper disinfection.

No licensed operator has been retained to maintain the system.

Overall plant condition was adequate.

Kenneth Schang

LOWER FLORIDA ESTUARY STUDY
DADE COUNTY WASTE SOURCE INVENTORY
TREATMENT PLANT – GENERAL INFORMATION

DATE OF VISIT 1-12-71
PLANT NAME: LAKEVIEW GARDEN APARTMENTS
PLANT OWNER: LAKEVIEW GARDEN APARTMENTS
ADDRESS 7711 MILLER DRIVE
TELEPHONE
COLLECTION SYSTEM – TYPE: SERVES APARTMENT COMPLEX
OWNER: LAKEVIEW GARDEN APARTMENTS
ADDRESS: 7711 MILLER DRIVE
TELEPHONE

DESIGN AVERAGE DESIGN FLOW: .03 MGD YEAR COMPLETED: 1967
STREAM FLOW NA cfs | DURATION NA days FREQUENCY NA Yrs
CONSTRUCTION COST NOT KNOWN
POPULATION SERVED 360 PEOPLE

OPERATION ANNUAL COST NOT KNOWN
PERSONNEL MAINTENANCE
LEVEL OF CERTIFICATION NONE
CONDITION OF EQUIPMENT OK

OUTFALL TYPE – SIZE NA LENGTH NA
DISCHARGED TO: DRAINFIELD WATER COURSE MILEAGE: NA
LATITUDE – LONGITUDE –

TREATMENT (LIST UNITS IN ORDER, EXCLUDING SLUDGE TREATMENT & DISPOSAL)

CONTACT TANK, SECONDARY SEDIMENTATION, REAERATION TANK, DOSING TANK + CHLORINATION, DRAINFIELD

W & S CONTACT STABILIZATION

SLUDGE TREATMENT AEROBIC DIGESTER

DISPOSAL TRUCKED AWAY

REMARKS

PREPARED BY: KW Schang

LOWER FLORIDA ESTUARY STUDY
DADE COUNTY WASTE SOURCE INVENTORY
TREATMENT PLANT FIELD SHEET

PLANT LAKEVIEW GARDENS APARTMENTS

							AVERAGE
DATE ON		1-12-71					
TIME ON		3:00					
DATE OFF		1-12-71					
TIME OFF		3:30					
FLOW	START	NO FLOW METER					
	END	NO WEIR					
	TOTAL						
	24 hr. Flow Rate						
INF.	TEMP. ON	85° F					
	PH - ON	–					
EFFLUENT	TEMP - ON	80° F					
	PH - ON	–					
	Cl. Residual	.1 PPM					
	CHLORINE-ON						
	CHLORINE-OFF						
	ON-OFF-lbs						

DATE	WASTE CHARACTERISTICS	PLANT OPERATION	AUTO. SAMPLER OPERATION	SAMPLES COLLECTED BY
1-12-71	TURBID - MILKY IN APPEARANCE	FAIR - SOME FOAMING, SOLIDS IN DOSING TANK	–	SCHANG

LOWER FLORIDA ESTUARY STUDY
DADE COUNTY WASTE SOURCE INVENTORY
TREATMENT PLANT – SCHEMATIC DIAGRAM

PLANT LAKEVIEW GARDEN APARTMENTS

DRAW COMPLETE FLOW DIAGRAM OF TREATMENT PLANT AND OUTFALL. LABEL EACH UNIT. SHOW LOCATIONS OF SAMPLE COLLECTION AND FLOW MEASURING DEVICES

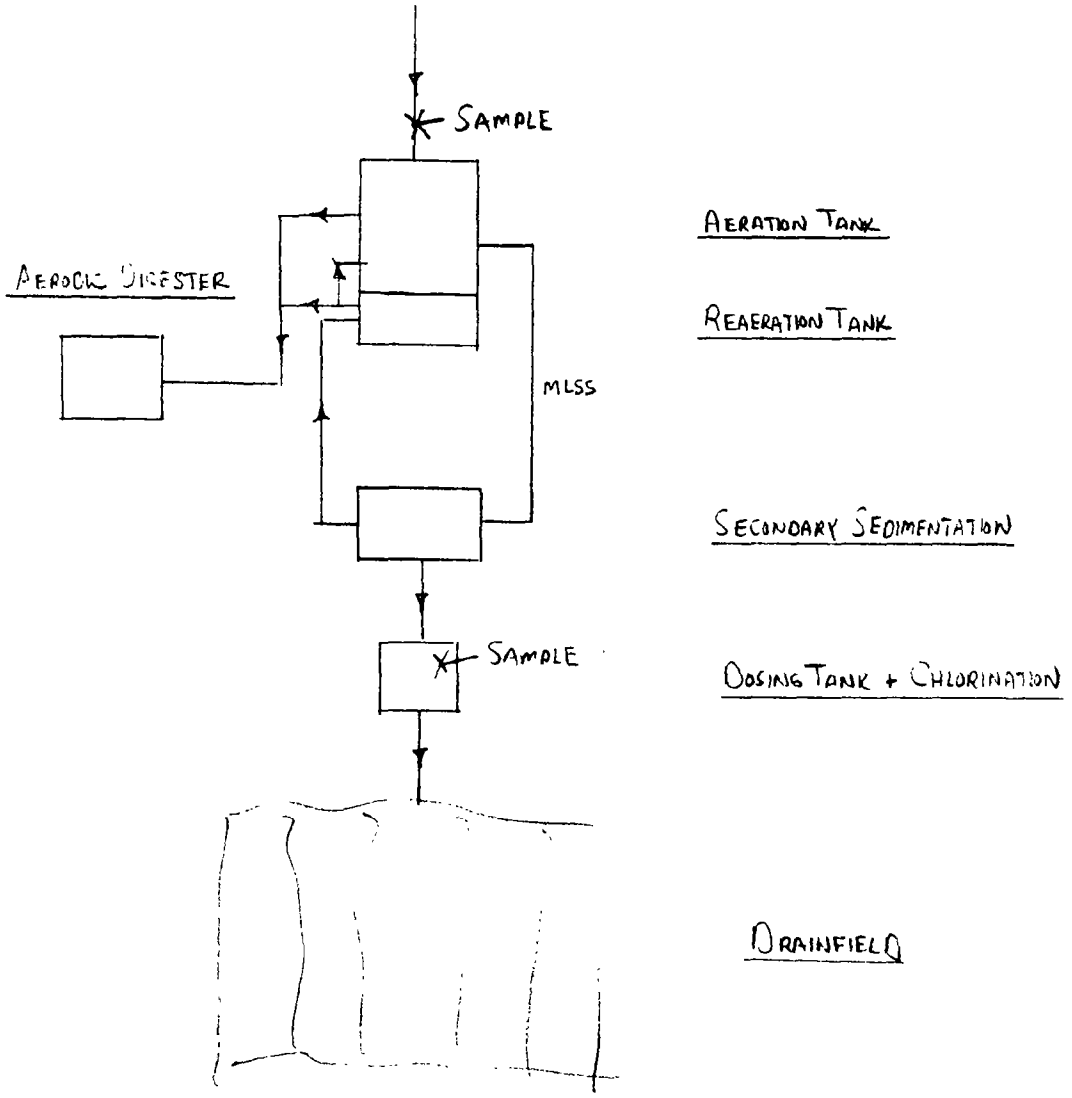

W&S CONTACT STACILIZATION

PREPARED BY: KW Schang

Sheet ___ of ___

LOWER FLORIDA ESTUARY STUDY
DADE COUNTY WASTE SOURCE INVENTORY
INFLUENT – EFFLUENT – / DATA SUMMARY

PLANT Lakeview Gardens Apts

							AVERAGE
DATE - OFF		1/12/71					
FLOW - MGD		.03					
5 DAY B O D mg/l	INFLUENT	219					
	EFFLUENT	24					
	IN - OUT						
	% REMOVAL	89.0					
	LOAD-lbs/day	6					
C O D mg/l	INFLUENT	601					
	EFFLUENT	34					
	IN - OUT						
	% REMOVAL	94.3					
	LOAD -lbs/day	8.5					
T S S mg/l	INFLUENT	72					
	EFFLUENT	26					
	IN - OUT						
	% REMOVAL	63.9					
	LOAD- lbs/day	6.5					
V S S mg/l	INFLUENT	56					
	EFFLUENT	12					
	IN - OUT						
	% REMOVAL	78.6					
	LOAD –lbs/day	3					
Settlable Solids ml/l	INFLUENT	.3					
	EFFLUENT	0.0					
	IN - OUT						
	% REMOVAL	100					
T O C mg/l	INFLUENT	250					
	EFFLUENT	13					
	IN - OUT						
	% REMOVAL	94.8					
	LOAD - lbs/day	3.25					

INFLUENT BOD POPULATION EQUIVALENT = 322 79.79

EFFLUENT BOD POPULATION EQUIVALENT = 55 6

LOAD = FLOW (MGD) x EFFLUENT (mg/l) x 8.34 = lbs/day

Released
From The Desk Of
Michael V. Polito MP

Sheet____ of_____

LOWER FLORIDA ESTUARY STUDY
DADE COUNTY WASTE SOURCE INVENTORY
EFFLUENT DATA SUMMARY

PLANT Lakeview Gardens Apts

							AVERAGE or MEDIAN*
DATE - OFF		1/12					
FLOW - MGD		.03					
KTELDAHL NITROGEN as N	CONC.-mg/l	4.8					
	LOAD-lbs/day	1.2					
AMMONIA NITROGEN as N	CONC.-mg/l	3.1					
	LOAD-lbs/day	.78					
ORGANIC NITROGEN as N	CONC.-mg/l	1.7					
	LOAD-lbs/day	.42					
NO_2 -NO_3 as N	CONC.-mg/l	2.2					
	LOAD-lbs/day	.55					
TOTAL PHOSPHORUS A S P	CONC.-mg/l	11.2					
	LOAD-lbs/day	2.8					
CHLORIDE	CONC.-mg/l	43					
TOTAL COLIFORM	CONC - MPN/100ml						
Fecal COLIFORM	CONC - MPN/100ml						

*Calculate Median for Total & Fecal Coliform Concentrations and Average for All Other Parameters.

Lower Florida Estuary Study
Ludlam Plaza Apartments Sewage Treatment Plant
Ludlam Road and S.W. 15th Street
South Miami, Dade County, Florida

March 15, 1971

INTRODUCTION

The Ludlam Plaza Apartment Sewage Treatment Plant was inspected and sampled on January 14, 1971 by Kenneth Schang. Grab samples of the influent and effluent after chlorination were obtained. The treatment plant utilizes the extended aeration process with chlorination prior to discharge to a drainfield. The inspection was conducted in conjunction with Mr. Daniel Pullam, plant operator.

SUMMARY AND CONCLUSIONS

BOD_5 removal was 99+% leaving an effluent concentration of .4 mg/l.

No reduction of total suspended solids was achieved with the effluent level of 12 mg/l being equal to the influent.

No chlorine residual was measured in the effluent immediately prior to discharge.

INVENTORY

1. Aeration tank; diffused air system.
2. Secondary sedimentation.
3. Dosing tank plus chlorination.
4. Aerobic digester; diffused air system.

DISCUSSION

Removal of BOD_5, COD and TOC equalled 99+, 91.1 and 76.9% with respective effluent concentrations of .4, 43 and 18 mg/l and corresponding stream loadings of .04, 4.48 and 1.88 lbs. per day.

The settleable solids influent level of .1 ml/l was reduced 100%. Total suspended solids removal efficiency was 0% with a corresponding stream loading of 1.25 lbs. per day.

Nutrient concentrations were as follows: ammonia nitrogen: 2.3 mg/l and .24 lbs. per day; nitrate-nitrite as N: 23 mg/l and 2.4 lbs. per day; total phosphorus: 13.6 mg/l and 1.42 lbs. per day.

RECOMMENDATIONS

Based on the chemical evaluation and visual inspection no recommendations with regard to plant operation are required.

The physical appearance is adequate.

Mr. Pullam is a class "C" operator.

Kenneth Schang

LOWER FLORIDA ESTUARY STUDY
DADE COUNTY WASTE SOURCE INVENTORY
TREATMENT PLANT – GENERAL INFORMATION

DATE OF VISIT 1-14-71
PLANT NAME: LUDLAM PLAZA APARTMENTS
PLANT OWNER: LUDLAM PLAZA APARTMENTS
ADDRESS LUDLAM ROAD AND S.W. 15 STREET
TELEPHONE —
COLLECTION SYSTEM – TYPE: SERVES APARTMENT COMPLEX
OWNER: LUDLAM PLAZA APARTMENTS
ADDRESS: LUDLAM ROAD AND S.W. 15 STREET
TELEPHONE —

DESIGN AVERAGE DESIGN FLOW: .0125 MGD YEAR COMPLETED: 1968
STREAM FLOW NA cfs | DURATION NA days FREQUENCY NA Yrs
CONSTRUCTION COST NOT KNOWN
POPULATION SERVED 155 PERSONS (APPROXIMATE)

OPERATION ANNUAL COST NOT KNOWN
PERSONNEL MAINTAINED BY ENVIRONMENTAL CONSULTANTS – MR. BULLAM
LEVEL OF CERTIFICATION CLASS "C" OPERATOR
CONDITION OF EQUIPMENT OK

OUTFALL TYPE — SIZE — LENGTH —
DISCHARGED TO: DRAINFIELD WATER COURSE MILEAGE: NOT APPLICABLE
LATITUDE — LONGITUDE —

TREATMENT (LIST UNITS IN ORDER, EXCLUDING SLUDGE TREATMENT & DISPOSAL)
SEPTIC TANK, SECONDARY SEDIMENTATION, DOSING TANK + CHLORINATION

SLUDGE TREATMENT AEROBIC DIGESTER

DISPOSAL TRUCKED AWAY

REMARKS

PREPARED BY: KW Schang

LOWER FLORIDA ESTUARY STUDY
DADE COUNTY WASTE SOURCE INVENTORY
TREATMENT PLANT FIELD SHEET

PLANT Ludlum Plaza Apartments

							AVERAGE
DATE ON		1-14-71					
TIME ON		2:00					
DATE OFF		1-14-71					
TIME OFF		2:45					
FLOW	START	No Weir					
	END	No Flow					
	TOTAL	Meter					
	24 hr. Flow Rate						
INF.	TEMP. ON	82°					
	PH - ON	–					
EFFLUENT	TEMP - ON	80°					
	PH - ON	–					
	Cl. Residual	0 PPM					
	CHLORINE-ON						
	CHLORINE-OFF						
	ON-OFF-lbs						

DATE	WASTE CHARACTERISTICS	PLANT OPERATION	AUTO. SAMPLER OPERATION	SAMPLES COLLECTED BY
1-14-71	Average	No Chlorine Operation OK	–	Schang

LOWER FLORIDA ESTUARY STUDY
DADE COUNTY WASTE SOURCE INVENTORY
TREATMENT PLANT – SCHEMATIC DIAGRAM

PLANT Ludlam Plaza Apartments

DRAW COMPLETE FLOW DIAGRAM OF TREATMENT PLANT AND OUTFALL. LABEL EACH UNIT. SHOW LOCATIONS OF SAMPLE COLLECTION AND FLOW MEASURING DEVICES

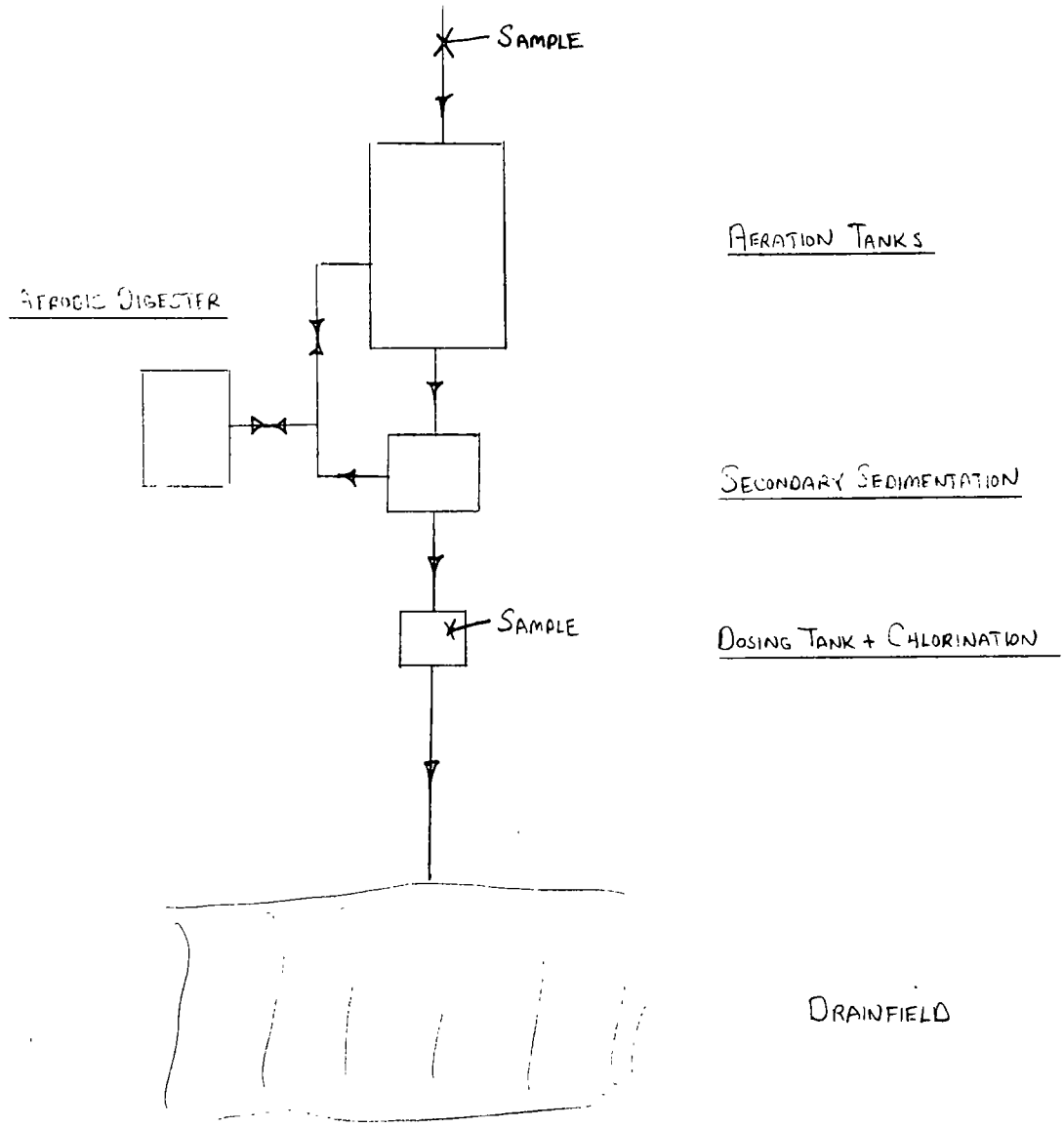

PREPARED BY: KW Schang

Sheet ___ of _____

LOWER FLORIDA ESTUARY STUDY
DADE COUNTY WASTE SOURCE INVENTORY
INFLUENT – EFFLUENT – DATA SUMMARY

PLANT Ludlam Plaza.

							AVERAGE
DATE - OFF		1/14/71					
FLOW - MGD		.0125					
5 DAY BOD mg/l	INFLUENT	177					
	EFFLUENT	0.4	most probably around 3.0 – 5.0				
	IN - OUT		needed plant depletion causes unusually				
	% REMOVAL	99+ %	low results not efficiency reported.				
	LOAD-lbs/day	.04					
COD mg/l	INFLUENT	483					
	EFFLUENT	43					
	IN - OUT						
	% REMOVAL	91.1					
	LOAD -lbs/day	4.43					
TSS mg/l	INFLUENT	12					
	EFFLUENT	12					
	IN - OUT						
	% REMOVAL	0					
	LOAD- lbs/day	1.25					
VSS mg/l	INFLUENT	10					
	EFFLUENT	8					
	IN - OUT						
	% REMOVAL	20					
	LOAD –lbs/day	.83					
Settlable Solids ml/l	INFLUENT	.1					
	EFFLUENT	0					
	IN - OUT						
	% REMOVAL	100					
TOC mg/l	INFLUENT	78					
	EFFLUENT	18					
	IN - OUT						
	% REMOVAL	76.9					
	LOAD - lbs/day	1.88					

INFLUENT BOD POPULATION EQUIVALENT = 108 18.46

EFFLUENT BOD POPULATION EQUIVALENT = 0 .04

LOAD = FLOW (MGD) x EFFLUENT (mg/l) x 8.34 = lbs/day

Released
From The Desk Of
Michael V. Polito

Sheet____ of_____.

LOWER FLORIDA ESTUARY STUDY
DADE COUNTY WASTE SOURCE INVENTORY
EFFLUENT DATA SUMMARY

PLANT Ludlam Plaza

							AVERAGE or MEDIAN*
DATE - OFF		1/14/71					
FLOW - MGD							
KTELDAHL NITROGEN as N	CONC.-mg/l	3.5					
	LOAD-lbs/day	.36					
AMMONIA NITROGEN as N	CONC.-mg/l	2.3					
	LOAD-lbs/day	.24					
ORGANIC NITROGEN as N	CONC.-mg/l	1.2					
	LOAD-lbs/day	.12					
NO_2 -NO_3 as N	CONC.-mg/l	23.0					
	LOAD-lbs/day	2.4					
TOTAL PHOSPHORUS AS P	CONC.-mg/l	13.6					
	LOAD-lbs/day	1.42					
CHLORIDE	CONC.-mg/l	46					
TOTAL COLIFORM	CONC - MPN/100ml						
Fecal COLIFORM	CONC - MPN/100ml						

*Calculate Median for Total & Fecal Coliform Concentrations and Average for All Other Parameters.

Lower Florida Estuary Study
Report on Waterborne Wastes from
Medley Mobile Home Court Sewage Treatment Plant
8181 S. River Drive
Medley, Dade County, Florida
March 19, 1971

INTRODUCTION

The Medley Mobile Home Sewage Treatment Plant was inspected and sampled on January 6, 1971 by Kenneth Schang. Grab samples of the influent and effluent after chlorination were obtained. The treatment plant is a W & S Contact Stabilization unit with tertiary filtration and chlorination prior to discharge to a soakage pit.

SUMMARY AND CONCLUSIONS

Removal of BOD exceeded 95% producing 10 mg/l effluent concentration.

The influent settleable solids level of 0.7 ml/l was reduced to 0.1 ml/l indicating an efficiency of 85.7%. This particular efficiency value is lower than what would be expected for a tertiary system, and even though the effluent contains only 0.1 ml/l settleable solids, this condition might be investigated.

A chlorine residual of 1.5 ppm was measured in the dosing tank prior to discharge.

INVENTORY

1. Comminutor.
2. Contact tank; diffused air system.
3. Secondary sedimentation.

4. Stabilization tank, diffused air system.

5. Equalizing tank + chlorination.

6. Tertiary filters.

7. Dosing tank.

8. Soakage pit.

9. Aerobic digester; diffused air system.

RESULTS

The effluent loadings for BOD, COD and TOC were 0.25, 1.35 and 0.6 lbs. per day based on a flow of 3000 GPD indicated by the flow meter at the time of inspection. The corresponding removal efficiencies were 95.9, 92.8 and 79.7% respectively. Total suspended solids removal was 77.9% producing an effluent discharge of 0.68 lbs. per day. The effluent settleable solids were measured at 0.1 ml/l produced from a removal efficiency of 85.7%.

Ammonia nitrogen, nitrate-nitrite nitrogen and total phosphorus concentrations equalled 2.2, 0.4 and 8.8 mg/l.

DISCUSSION

An obvious problem exists with respect to solids removal. A 77.9% removal of suspended solids and 85.7% removal of settleable solids instituted by a tertiary treatment system does not seem to be adequate. It is recommended that the efficiency of the filters with respect to solids removal be investigated.

The plant appeared to be in good physical condition.

Kenneth Schang

LOWER FLORIDA ESTUARY STUDY
DADE COUNTY WASTE SOURCE INVENTORY
TREATMENT PLANT – GENERAL INFORMATION

DATE OF VISIT 1-6-70
PLANT NAME: MEDLEY MOBILE HOME COURT
PLANT OWNER: MEDLEY MOBILE HOME COURT
ADDRESS 8131 S. RIVER DRIVE
TELEPHONE 387-8092
COLLECTION SYSTEM – TYPE: SERVES MOBILE HOME PARK
OWNER: MEDLEY MOBILE HOME COURT
ADDRESS: 8131 S. RIVER DRIVE
TELEPHONE 387-8092

DESIGN AVERAGE DESIGN FLOW: .035 MGD YEAR COMPLETED: 1970
STREAM FLOW NA cfs DURATION NA days FREQUENCY NA Yrs
CONSTRUCTION COST NOT KNOWN
POPULATION SERVED 315 PEOPLE (PRESENT) 606 PEOPLE (ULTIMATE)

OPERATION ANNUAL COST NOT KNOWN
PERSONNEL MAINTENANCE
LEVEL OF CERTIFICATION NONE
CONDITION OF EQUIPMENT GOOD

OUTFALL TYPE GRAVITY SIZE NOT APPLICABLE LENGTH NOT APPLICABLE
DISCHARGED TO: SOAKAGE PIT WATER COURSE MILEAGE: NOT APPLICABLE
LATITUDE – LONGITUDE –

TREATMENT (LIST UNITS IN ORDER, EXCLUDING SLUDGE TREATMENT & DISPOSAL)
SCREENING, AERATION TANK, SECONDARY SEDIMENTATION, EQUALIZING TANK, CHLORINATION, FILTERS, DOSING TANK, SOAKAGE PIT.

UNS CONTACT STABILIZATION

SLUDGE TREATMENT AEROBIC DIGESTER

DISPOSAL TRUCKED AWAY

REMARKS

PREPARED BY: KW Schang

LOWER FLORIDA ESTUARY STUDY
DADE COUNTY WASTE SOURCE INVENTORY
TREATMENT PLANT FIELD SHEET

PLANT MEDLEY MOBILE HOME COURT

							AVERAGE
DATE ON		1-6-71					
TIME ON		3:30					
DATE OFF		1-6-71					
TIME OFF		4:15					
FLOW	START	3000 GPD					
	END						
	TOTAL						
	24 hr. Flow Rate						
INF.	TEMP. ON	85°C					
	PH - ON	–					
EFFLUENT	TEMP - ON	80°C					
	PH - ON	–					
	Cl. Residual	1.5 PPM					
	CHLORINE-ON						
	CHLORINE-OFF						
	ON-OFF-lbs						

DATE	WASTE CHARACTERISTICS	PLANT OPERATION	AUTO. SAMPLER OPERATION	SAMPLES COLLECTED BY
1-6-70	AVERAGE	O.K. - Scum on aeration tanks	–	SCHANG

LOWER FLORIDA ESTUARY STUDY
DADE COUNTY WASTE SOURCE INVENTORY
TREATMENT PLANT – SCHEMATIC DIAGRAM

PLANT Medley Mobile Home Court

DRAW COMPLETE FLOW DIAGRAM OF TREATMENT PLANT AND OUTFALL. LABEL EACH UNIT. SHOW LOCATIONS OF SAMPLE COLLECTION AND FLOW MEASURING DEVICES

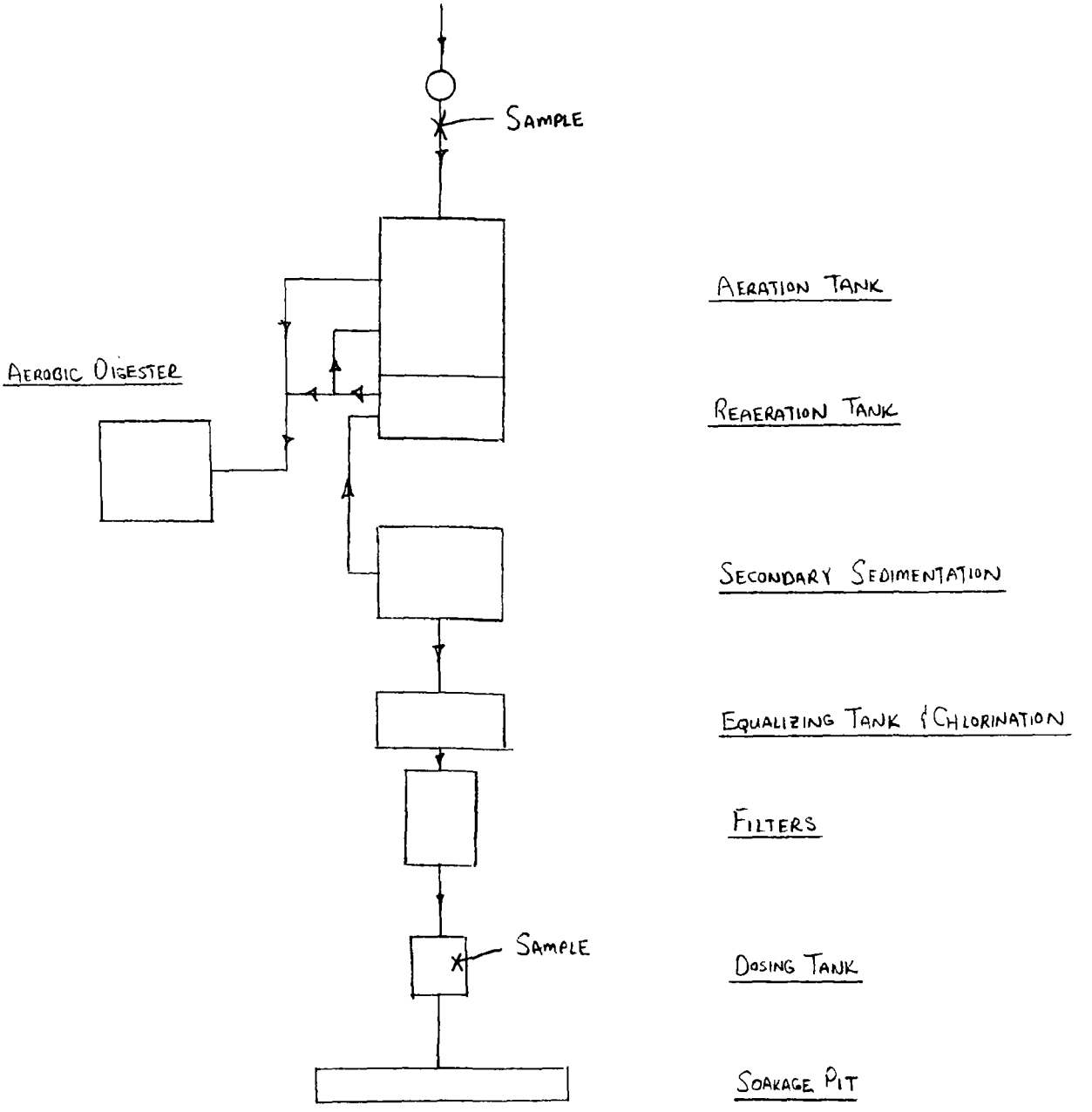

W&C Contact Stabilization

PREPARED BY: KW Schang

LOWER FLORIDA ESTUARY STUDY
DADE COUNTY WASTE SOURCE INVENTORY
INFLUENT – EFFLUENT – DATA SUMMARY

Sheet ___ of _____

PLANT Medley Mob

							AVERAGE
DATE - OFF		1-6-71					
FLOW - MGD		0.003					
5 DAY B O D mg/l	INFLUENT	241					
	EFFLUENT	10					
	IN - OUT	231					
	% REMOVAL	95.9					
	LOAD-lbs/day	0.25					
C O D mg/l	INFLUENT	747					
	EFFLUENT	54					
	IN - OUT	693					
	% REMOVAL	92.8					
	LOAD -lbs/day	1.35					
T S S mg/l	INFLUENT	122					
	EFFLUENT	27					
	IN - OUT	95					
	% REMOVAL	77.9					
	LOAD- lbs/day	.08					
V S S mg/l	INFLUENT	116					
	EFFLUENT	24					
	IN - OUT	92					
	% REMOVAL	79.3					
	LOAD –lbs/day	.6					
Settlable Solids ml/l	INFLUENT	.7					
	EFFLUENT	.1					
	IN - OUT	.6					
	% REMOVAL	85.7					
T O C mg/l	INFLUENT	118					
	EFFLUENT	24					
	IN - OUT	93.5					
	% REMOVAL	79.7					
	LOAD - lbs/day	0.6					

INFLUENT BOD POPULATION EQUIVALENT = 35 6.02

EFFLUENT BOD POPULATION EQUIVALENT = 1 .25

LOAD = FLOW (MGD) x EFFLUENT (mg/l) x 8.34 = lbs/day

Released

MPC

From The Desk Of
Michael V. Polito

Sheet____ of_____

LOWER FLORIDA ESTUARY STUDY
DADE COUNTY WASTE SOURCE INVENTORY
EFFLUENT DATA SUMMARY

PLANT Medley Mod.

							AVERAGE or MEDIAN*
DATE - OFF				1/6			
FLOW - MGD		.003					
KTELDAHL NITROGEN as N	CONC.-mg/l			3.4			
	LOAD-lbs/day			.085			
AMMONIA NITROGEN as N	CONC.-mg/l			2.2			
	LOAD-lbs/day			.055			
ORGANIC NITROGEN as N	CONC.-mg/l			1.2			
	LOAD-lbs/day			.03			
NO_2 -NO_3 as N	CONC.-mg/l			0.4			
	LOAD-lbs/day			.01			
TOTAL PHOSPHORUS AS P	CONC.-mg/l			8.8			
	LOAD-lbs/day			.22			
CHLORIDE	CONC.-mg/l			86			
TOTAL COLIFORM	CONC - MPN/100ml						
Fecal COLIFORM	CONC - MPN/100ml						

*Calculate Median for Total & Fecal Coliform Concentrations and Average for All Other Parameters.

Lower Florida Estuary Study
Report on Waterborne Wastes from
Miami Shores Condominium Sewage Treatment Plant
1700 N.E. 105th Street
Miami Shores, Dade County, Florida
February 23, 1971

INTRODUCTION

The Miami Shores Condominium Sewage Treatment Plant was inspected and sampled on December 2, 1970 by Kenneth Schang. Grab samples of the influent and effluent after chlorination were obtained. The treatment plant is a Chicago Pump-Rapid Bloc package unit with chlorination prior to discharge to Biscayne Bay. Initial contact was made through Mr. Dick Groendyke, manager of the condominium.

SUMMARY AND CONCLUSIONS

Removal of BOD_5 was 82.3% efficient and 59 mg/l was the effluent concentration. The effluent contained a higher level of settleable solids than the influent, 2.5 vs 4.0 ml/l, which implies considerable inadequacy in the treatment system.

A chlorine residual of 2 ppm was measured in the chlorine contact chamber just prior to discharge.

INVENTORY

1. Comminutor, located at the influent to the wet well.
2. Aeration tank, diffused air system.

3. Secondary sedimentation.

4. Chlorination.

5. Aerobic digestion, diffused air with waste sludge being trucked away.

RESULTS

Removal of BOD_5, COD and TOC was 82.3, 68.7 and 66.7% respectively with effluent concentrations of 59, 223 and 55 mg/l respectively, and loadings of 9.84, 37.2 and 9.17 lbs. per day respectively based on the average design flow of .02 MGD.

Solids removal was at an equally low level; total suspended solids were measured at 80 mg/l in the effluent for a removal efficiency of 60%. Settleable solids were more prevalent in the effluent than the influent with 2.5 ml/l and 4 ml/l being the respective measured values.

Organic nitrogen loading was calculated as 3.20 lbs. per day, nitrate-nitrite nitrogen loading was .034 lbs. per day, and total phosphorus was being discharged at the rate of 1.73 lbs. per day.

DISCUSSION

The chemical data coupled with a visual inspection indicates that a problem caused by surging exists in this particular system. The relatively high level of organic nitrogen in the effluent shows that the sewage is not receiving adequate detention. In addition, flow in the chlorine contact chamber appeared to be significantly higher than the design value. The recommendation is for a more detailed investigation of the flow condition to evaluate if a critical overload is in fact occuring and what can be done to alleviate the problem.

The return sludge line from the secondary clarifier to the aeration tank did not appear to be delivering an adequate amount of solids. It is recommended that this condition also be investigated.

In addition, a flow meter should be installed.

A licensed operator was not maintaining the treatment plant at the time of inspection. However, a local consulting company was recently retained by the owners of the Shores Condominium and a class "C" operator, Mr. Pullam, will now be in charge of operation.

Kenneth Schang

LOWER FLORIDA ESTUARY STUDY
DADE COUNTY WASTE SOURCE INVENTORY
TREATMENT PLANT – GENERAL INFORMATION

DATE OF VISIT 12-2-70
PLANT NAME: Miami Shores Condominium
PLANT OWNER: Miami Shores Condominium
ADDRESS 1700 N.E. 105 Street
TELEPHONE 759-4172
COLLECTION SYSTEM – TYPE: Serves Condominium
OWNER: Miami Shores Condominium
ADDRESS: 1700 N.E 105 Street
TELEPHONE 759-4172

DESIGN | AVERAGE DESIGN FLOW: .02 MGD YEAR COMPLETED: 1964
STREAM FLOW NA cfs | DURATION NA days FREQUENCY NA Yrs
CONSTRUCTION COST Not known
POPULATION SERVED 75 Unit Condominium Approximately 100 People

OPERATION | ANNUAL COST $300 Approximate Not including chlorine
PERSONNEL Dick Spellman
LEVEL OF CERTIFICATION None
CONDITION OF EQUIPMENT
OUTFALL | TYPE Gravity SIZE 8 inch LENGTH 300 ft
DISCHARGED TO: Biscayne Bay WATER COURSE MILEAGE: Not Applicable
LATITUDE Not Applicable LONGITUDE Not Applicable
TREATMENT | (LIST UNITS IN ORDER, EXCLUDING SLUDGE TREATMENT & DISPOSAL)
Comminutor, Aeration, Sedimentation (Sedimentation), Chlorination

Septic Tank - Chicago Pump

SLUDGE | TREATMENT Aerobic Digestion

DISPOSAL Trucked to Dump

REMARKS | 1) Large [illegible] in Septic Tank
2) Considerable solids in effluent

PREPARED BY: KW Schang

LOWER FLORIDA ESTUARY STUDY
DADE COUNTY WASTE SOURCE INVENTORY
TREATMENT PLANT FIELD SHEET

PLANT Miami Shores Condominium

							AVERAGE
DATE ON		12-2-70					
TIME ON		2:30					
DATE OFF		12-2-70					
TIME OFF		3:00					
FLOW	START	No Flow					
	END	Meter					
	TOTAL						
	24 hr. Flow Rate						
INF.	TEMP. ON	27°C	Sampled at	2:45			
	PH - ON						
EFFLUENT	TEMP - ON	27°C	Sampled at	2.50			
	PH - ON						
	Cl. Residual	5 ppm					
	CHLORINE-ON	[illegible]					
	CHLORINE-OFF						
	ON-OFF-lbs						

DATE	WASTE CHARACTERISTICS	PLANT OPERATION	AUTO. SAMPLER OPERATION	SAMPLES COLLECTED BY
12-1-70	Sludy	Fair - Considerable Solids in Effluent	–	Schang
		No Flow Meter		
		Comminutor Temporarily		
		Inoperative		

LOWER FLORIDA ESTUARY STUDY
DADE COUNTY WASTE SOURCE INVENTORY
TREATMENT PLANT – SCHEMATIC DIAGRAM

PLANT Miami Shores Condominium

DRAW COMPLETE FLOW DIAGRAM OF TREATMENT PLANT AND OUTFALL. LABEL EACH UNIT. SHOW LOCATIONS OF SAMPLE COLLECTION AND FLOW MEASURING DEVICES

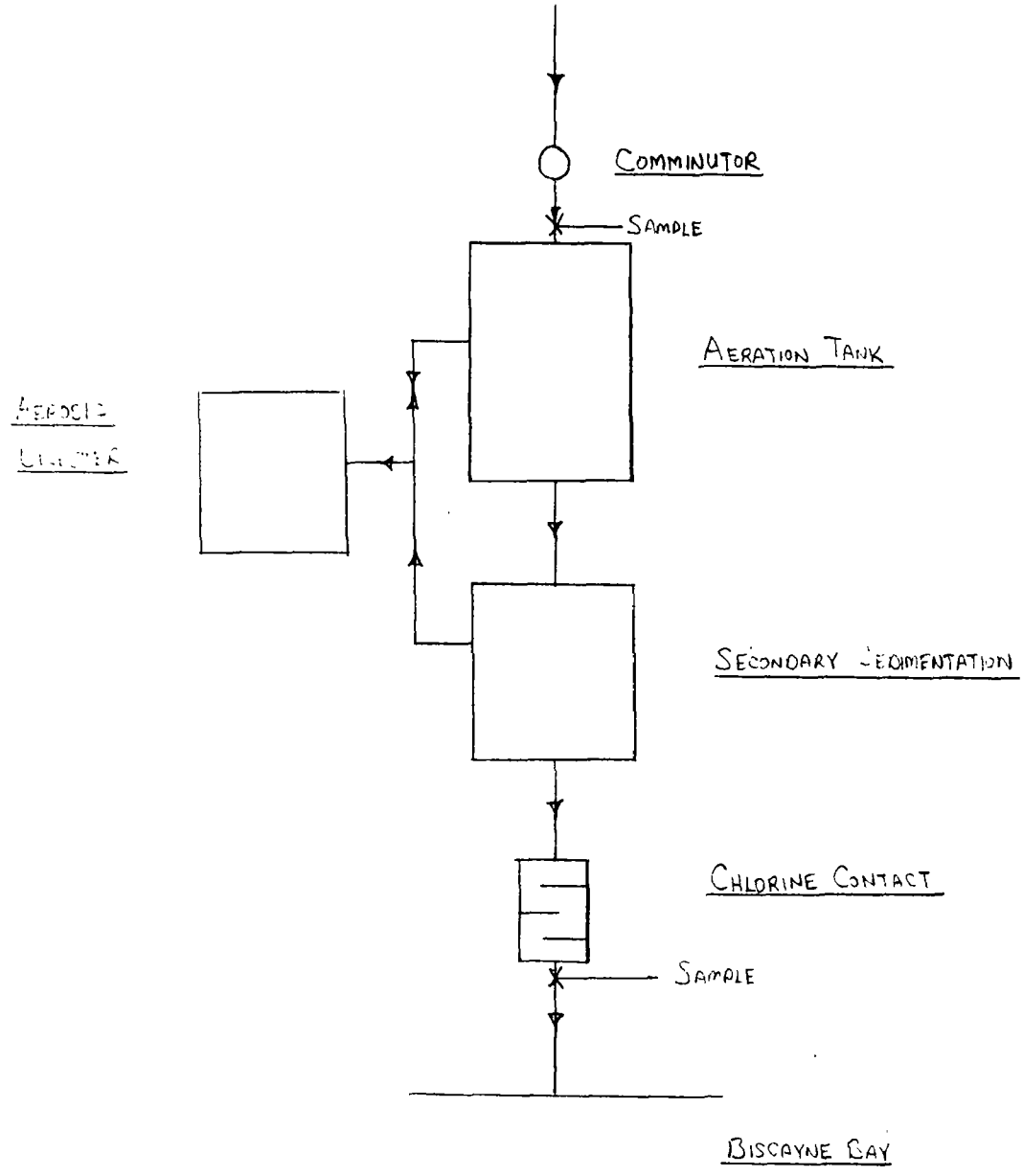

Chicago Pump

Rapid Disc

Complete Mix

PREPARED BY: KW Schang

Sheet ___ of _____

LOWER FLORIDA ESTUARY STUDY
DADE COUNTY WASTE SOURCE INVENTORY
INFLUENT – EFFLUENT – DATA SUMMARY

PLANT Miami Shores Condominium

							AVERAGE
DATE - OFF		12/2/70					
FLOW - MGD		.02					
5 DAY B O D mg/l	INFLUENT	333					
	EFFLUENT	59					
	IN - OUT						
	% REMOVAL	82.3					
	LOAD-lbs/day	9.84					
C O D mg/l	INFLUENT	713					
	EFFLUENT	223					
	IN - OUT	490					
	% REMOVAL	68.7					
	LOAD -lbs/day	37.2					
T S S mg/l	INFLUENT						
	EFFLUENT	[illegible]					
	IN - OUT						
	% REMOVAL	60					
	LOAD- lbs/day	13.34					
V S S mg/l	INFLUENT						
	EFFLUENT	[illegible]					
	IN - OUT						
	% REMOVAL	80					
	LOAD –lbs/day	6					
Settlable Solids ml/l	INFLUENT	2.5					
	EFFLUENT	4.0					
	IN - OUT						
	% REMOVAL						
T O C mg/l	INFLUENT	165					
	EFFLUENT	55					
	IN - OUT						
	% REMOVAL	66.7					
	LOAD - lbs/day	9.17					

INFLUENT BOD POPULATION EQUIVALENT = 327

EFFLUENT BOD POPULATION EQUIVALENT = 58

LOAD = FLOW (MGD) x EFFLUENT (mg/l) x 8.34 = lbs/day

From The Desk Of
Michael V. Polito

Sheet____ of_____

LOWER FLORIDA ESTUARY STUDY
DADE COUNTY WASTE SOURCE INVENTORY
EFFLUENT DATA SUMMARY

PLANT Miami Shores Condominium

DATE - OFF							AVERAGE or MEDIAN*
FLOW - MGD		12/2/80	.02				
KTELDAHL NITROGEN as N	CONC.-mg/l	20.2					
	LOAD-lbs/day	3.37					
AMMONIA NITROGEN as N	CONC.-mg/l	1.0					
	LOAD-lbs/day	.17					
ORGANIC NITROGEN as N	CONC.-mg/l	19.2					
	LOAD-lbs/day	3.2					
NO_2 -NO_3 as N	CONC.-mg/l	0.2					
	LOAD-lbs/day	.034					
TOTAL PHOSPHORUS AS P	CONC.-mg/l	10.4					
	LOAD-lbs/day	1.73					
CHLORIDE	CONC.-mg/l	87.0					
		14.51					
TOTAL COLIFORM	CONC - MPN/100ml						
Fecal COLIFORM	CONC - MPN/100ml						

*Calculate Median for Total & Fecal Coliform Concentrations and Average for All Other Parameters.

Lower Florida Estuary Study
Operation Report on
Miami Springs High School Sewage Treatment Plant
750 Dove Avenue
Miami Springs, Dade County, Florida
March 11, 1971

INTRODUCTION

The Miami Springs High School Sewage Treatment Plant was inspected and sampled on January 15, 1971, by Kenneth Schang. Grab samples of the influent and effluent after chlorination were obtained. The treatment plant is a Chicago Pump-Rated Aeration package unit with chlorination prior to discharge to a drainfield. The plant inspection was conducted in conjunction with Mr. D. Pullam, plant operator.

SUMMARY AND CONCLUSIONS

BOD removal efficiency equalled 71.8% with an effluent concentration of 66 mg/l.

Total suspended solids removal efficiency was 5.8% for a reduction of the 138 mg/l influent value to 130 mg/l.

A chlorine residual of 2 ppm was measured in the effluent immediately prior to discharge.

INVENTORY

1. Comminutor.
2. Aeration tank; diffused air system.
3. Secondary sedimentation.
4. Dosing tank plus chlorination.

RESULTS

The influent settleable solids value of 2.5 ml/l was increased to 3 ml/l in the effluent. Total suspended solids removal efficiency was only 5.8% with a corresponding effluent concentration of 130 mg/l.

BOD_5, COD and TOC effluent concentrations were 66, 221, and 55 mg/l respectively with corresponding removal efficiencies of 71.8, 65.4, and 59.3%.

The Kjeldahl nitrogen effluent concentration was significant at 55.1 mg/l. Nitrate-nitrite as N and total phosphorus effluent concentrations were .03 and 9 mg/l respectively.

DISCUSSION

At the time of inspection a significant surge went through the plant, carrying solids out of the secondary sedimentation tank. The relatively high Kjeldahl nitrogen value substantiates the significance of this hydraulic overload by indicating that insufficient detention time is a problem. One recommendation is to investigate the surging conditions and determine how the problem might be alleviated.

The age of the plant contributed to a "below average" physical appearance although all mechanical units were operational.

Mr. Pullam is licensed class "C".

Kenneth Schang

Sheet 1 of ____

LOWER FLORIDA ESTUARY STUDY
DADE COUNTY WASTE SOURCE INVENTORY
TREATMENT PLANT – GENERAL INFORMATION

DATE OF VISIT 1-15-71
PLANT NAME: MIAMI SPRINGS HIGH SCHOOL
PLANT OWNER: MIAMI SPRINGS HIGH SCHOOL - DADE COUNTY SCHOOL BOARD
ADDRESS 750 DOVE AVENUE
TELEPHONE –
COLLECTION SYSTEM – TYPE: SERVES HIGH SCHOOL
OWNER: MIAMI SPRINGS HIGH SCHOOL - DADE COUNTY SCHOOL BOARD
ADDRESS: 750 DOVE AVENUE
TELEPHONE –

DESIGN AVERAGE DESIGN FLOW: .OR MGD YEAR COMPLETED: 1964
STREAM FLOW NA cfs | DURATION NA days FREQUENCY NA Yrs
CONSTRUCTION COST NOT KNOWN
POPULATION SERVED SENIOR HIGH SCHOOL

OPERATION ANNUAL COST NOT KNOWN
PERSONNEL MR. DANIEL PULLAM - ENVIRONMENTAL CONSULTANTS
LEVEL OF CERTIFICATION CLASS "C"
CONDITION OF EQUIPMENT GOOD

OUTFALL TYPE FOR E. SIZE NA LENGTH NA
DISCHARGED TO: DRAINFIELD WATER COURSE MILEAGE: NA
LATITUDE – LONGITUDE –

TREATMENT (LIST UNITS IN ORDER, EXCLUDING SLUDGE TREATMENT & DISPOSAL)
COMMINUTOR, AERATION TANK, SECONDARY SEDIMENTATION, DOSING TANK + CHLORINATION, DRAINFIELD

CHIGAGO PUMP - RATED AERATION

SLUDGE TREATMENT AEROBIC DIGESTER

DISPOSAL TRUCKED AWAY

REMARKS A SIEVE CARRIED SOLIDS OUT OF THE SECONDARY SEDIMENTATION TANK

PREPARED BY: KW Schang

LOWER FLORIDA ESTUARY STUDY
DADE COUNTY WASTE SOURCE INVENTORY
TREATMENT PLANT FIELD SHEET

PLANT Miami Springs High School

							AVERAGE
DATE ON		1-15-71					
TIME ON		10:15					
DATE OFF		1-15-71					
TIME OFF		10:45					
FLOW	START						
	END						
	TOTAL						
	24 hr. Flow Rate						
INF.	TEMP. ON	84° F					
	PH - ON	-					
EFFLUENT	TEMP - ON	78° F					
	PH - ON	-					
	Cl. Residual	≥ ppm					
	CHLORINE-ON						
	CHLORINE-OFF						
	ON-OFF-lbs						

DATE	WASTE CHARACTERISTICS	PLANT OPERATION	AUTO. SAMPLER OPERATION	SAMPLES COLLECTED BY
1-15-71	Effluent - Pleasant Odor	Surge at the time of inspection	-	Schaus

LOWER FLORIDA ESTUARY STUDY
DADE COUNTY WASTE SOURCE INVENTORY
TREATMENT PLANT – SCHEMATIC DIAGRAM

PLANT Miami Springs High School

DRAW COMPLETE FLOW DIAGRAM OF TREATMENT PLANT AND OUTFALL. LABEL EACH UNIT. SHOW LOCATIONS OF SAMPLE COLLECTION AND FLOW MEASURING DEVICES

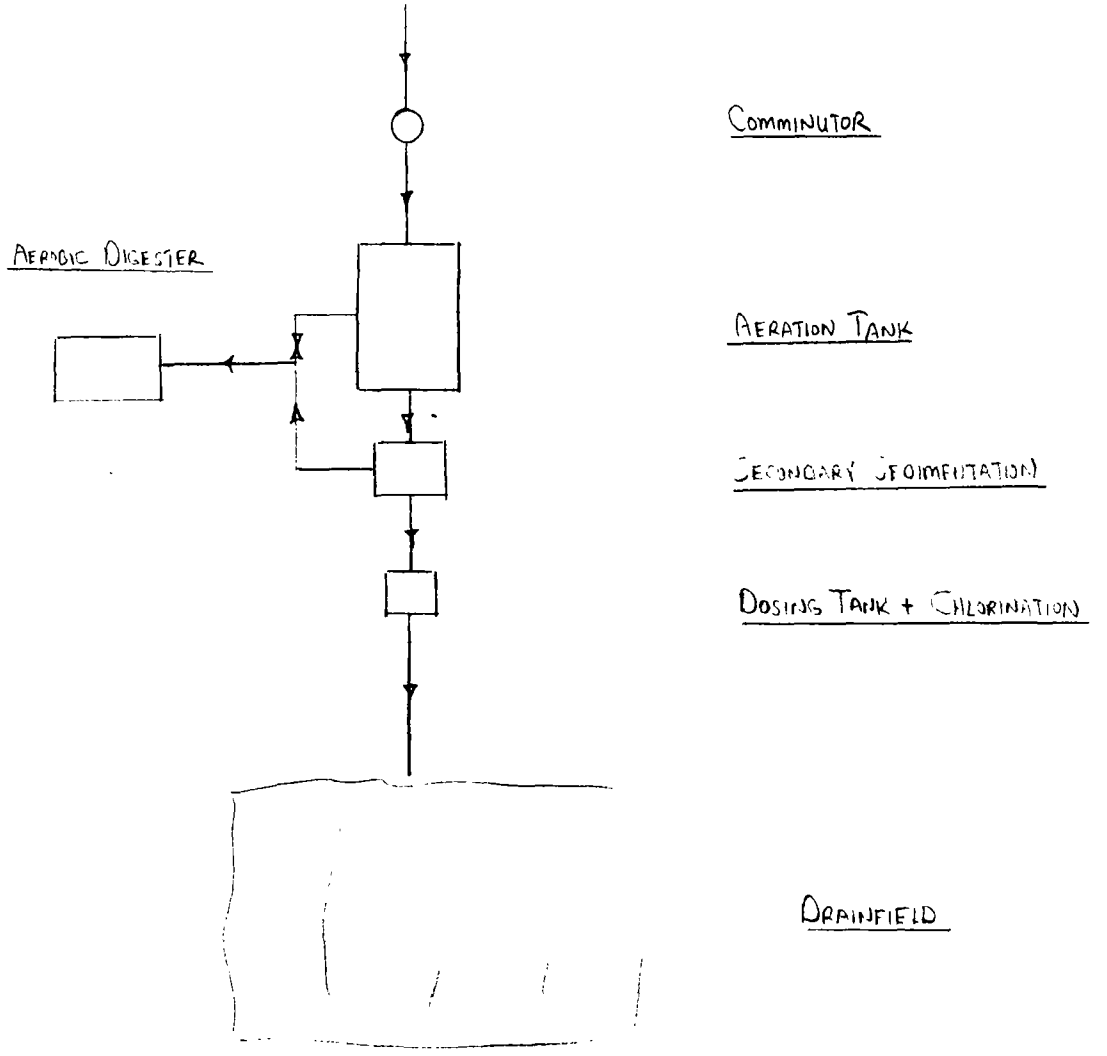

PREPARED BY: KW Schang

LOWER FLORIDA ESTUARY STUDY

DADE COUNTY WASTE SOURCE INVENTORY

INFLUENT – EFFLUENT – DATA SUMMARY

Sheet ___ of ___

PLANT Miami Springs H.S.

							AVERAGE
DATE - OFF		1/15/71					
FLOW - MGD		.02					
5 DAY BOD mg/l	INFLUENT	234					
	EFFLUENT	66					
	IN - OUT						
	% REMOVAL	71.8					
	LOAD-lbs/day	11					
COD mg/l	INFLUENT	638					
	EFFLUENT	221					
	IN - OUT						
	% REMOVAL	65.4					
	LOAD -lbs/day	36.86					
TSS mg/l	INFLUENT	138					
	EFFLUENT	130					
	IN - OUT						
	% REMOVAL	5.8					
	LOAD- lbs/day	21.68					
VSS mg/l	INFLUENT	94					
	EFFLUENT	82					
	IN - OUT						
	% REMOVAL	12.8					
	LOAD -lbs/day	13.68					
Settlable Solids ml/l	INFLUENT	2.5					
	EFFLUENT	3.0					
	IN - OUT						
	% REMOVAL	-20					
TOC mg/l	INFLUENT	135					
	EFFLUENT	55					
	IN - OUT						
	% REMOVAL	59.3					
	LOAD - lbs/day	9.17					

INFLUENT BOD POPULATION EQUIVALENT = 229 39.03

EFFLUENT BOD POPULATION EQUIVALENT = 64 11

LOAD = FLOW (MGD) x EFFLUENT (mg/l) x 8.34 = lbs/day

Released

From The Desk Of
Michael V. Polito

Sheet____ of_____

LOWER FLORIDA ESTUARY STUDY
DADE COUNTY WASTE SOURCE INVENTORY
EFFLUENT DATA SUMMARY

PLANT Miami Springs H.S.

							AVERAGE or MEDIAN*
DATE - OFF		1/15/71					
FLOW - MGD							
KTELDAHL NITROGEN as N	CONC.-mg/l	55.1					
	LOAD-lbs/day	9.19					
AMMONIA NITROGEN as N	CONC.-mg/l	43.2					
	LOAD-lbs/day	7.2					
ORGANIC NITROGEN as N	CONC.-mg/l	11.9					
	LOAD-lbs/day	1.98					
NO_2 -NO_3 as N	CONC.-mg/l	0.03					
	LOAD-lbs/day	.005					
TOTAL PHOSPHORUS AS P	CONC.-mg/l	9.0					
	LOAD-lbs/day	1.5					
CHLORIDE	CONC.-mg/l	104					
TOTAL COLIFORM	CONC - MPN/100ml						
Fecal COLIFORM	CONC - MPN/100ml						

*Calculate Median for Total & Fecal Coliform Concentrations and Average for All Other Parameters.

Lower Florida Estuary Study
Report on Waterborne Wastes from
Midway Mall Sewage Treatment Plant
West Flagler Street and the Palmetto Expressway

March 22, 1971

INTRODUCTION

The Midway Mall Sewage Treatment Plant was inspected and sampled on December 8, 1970 by Kenneth Schang. Grab samples of the influent and effluent after chlorination were obtained. The treatment plant consists of two Davco Contact Stabilization package units in parallel, each capable of treating 0.06 MGD, with tertiary filtration and chlorination prior to discharge to the North Line Canal. Only one plant was in operation at the time of inspection; this plant was being operated as an extended aeration system until both plants are placed in operation. The inspection was conducted in conjunction with Mr. Richard Kasch, plant operator.

SUMMARY AND CONCLUSIONS

BOD was reduced 98.3% to 4.5 mg/l and no settleable solids were measured in the effluent.

The chlorine residual present in the holding tank equalled 2 ppm.

Total suspended solids removal efficiency equalled 87.8% with 47 mg/l being the effluent concentration.

INVENTORY

1. Comminutor.

2. Aeration tank - contact tank, diffused air system.

3. Secondary sedimentation.

4. Reaeration tank, diffused air system.

5. Pre-chlorination.

6. Dosing tank.

7. Tertiary filters.

8. Final holding tank.

9. Aerobic digester, waste sludge hauled away; diffused air system.

RESULTS

BOD, COD and TOC removals were 98.3, 94.2 and 94.3% respectively with effluent concentrations equalling 4.5, 38 and 9 mg/l. Utilizing an average design flow figure of 0.06 MGD for the one plant in operation, the corresponding estimated loadings are 2.25, 19 and 4.5 lbs. per day.

Removal of settleable solids was 100% effective. Forty-seven mg/l of TSS were measured in the effluent which indicates that approximately 23.5 lbs. per day was being discharged to the canal. Total suspended solids removal was 87.8% efficient.

Nutrient concentrations were relatively insignificant: ammonia nitrogen: 1.0 mg/l, nitrate-nitrite as N: 3.4 mg/l and total phosphorus: 0.8 mg/l. The corresponding estimated loadings were 0.85, 1.7 and 0.4 lbs. per day respectively. These were calculated utilizing the average design flow of 0.06 MGD.

DISCUSSION

Overall plant operation appeared to be very good; however, the suspended solids removal efficiency was not adequate. It is recommended that the treatment efficiency of the tertiary filters be evaluated in order to determine whether they are functioning.

Mr. Richard Kusch, employed by Dade County as a treatment plant operator, is licensed class "B".

Kenneth Schang

LOWER FLORIDA ESTUARY STUDY
DADE COUNTY WASTE SOURCE INVENTORY
TREATMENT PLANT – GENERAL INFORMATION

DATE OF VISIT 12-8-70
PLANT NAME: MIDWAY MALL
PLANT OWNER: MIDWAY MALL
ADDRESS WEST FLAGLER STREET & PALMETTO EXPRESSWAY
TELEPHONE 223-2223
COLLECTION SYSTEM – TYPE: SEARS SHOPPING CENTER
OWNER: MIDWAY MALL
ADDRESS: WEST FLAGLER STREET & PALMETTO EXPRESSWAY
TELEPHONE 223-2223

DESIGN AVERAGE DESIGN FLOW: .12 MGD YEAR COMPLETED: 1970
STREAM FLOW — cfs | DURATION — days FREQUENCY — Yrs DATA NOT KNOWN
CONSTRUCTION COST NOT KNOWN
POPULATION SERVED 84 STORES

OPERATION ANNUAL COST NOT APPLICABLE – NEW PLANT
PERSONNEL RICHARD KASCH AND HERB SCHMIDT OPERATOR.
LEVEL OF CERTIFICATION CLASS "D" – KASCH
CONDITION OF EQUIPMENT GOOD
OUTFALL TYPE GRAVITY SIZE 3 INCH LENGTH 600 FEET
DISCHARGED TO: NORTH LINE CANAL WATER COURSE MILEAGE: NOT KNOWN
LATITUDE — LONGITUDE —
TREATMENT (LIST UNITS IN ORDER, EXCLUDING SLUDGE TREATMENT & DISPOSAL)
COMMINUTOR, AERATION TANK, SECONDARY SEDIMENTATION, CHLORINATION, CHLORINE CONTACT TANK, CANAL

—TO BE CONTACT STABILIZATION—

SLUDGE TREATMENT AEROBIC DIGESTION

DISPOSAL TRUCKED AWAY

REMARKS VERY GOOD EFFLUENT
1) AT TIME OF VISIT HIGH LEVEL ALARM HAD BEEN TRIGGERED – COMMINUTOR WAS CLOGGED AND SEWER LINES WERE SAID TO BE INADEQUATE.

PREPARED BY: KW Schaing

Sheet 2 of 3

LOWER FLORIDA ESTUARY STUDY
DADE COUNTY WASTE SOURCE INVENTORY
TREATMENT PLANT FIELD SHEET

PLANT MIDWAY MALL

							AVERAGE
DATE ON		12-8-70					
TIME ON		8:00					
DATE OFF		12-8-70					
TIME OFF		8:45					
FLOW	START	No Flow					
	END	METER					
	TOTAL						
	24 hr. Flow Rate						
INF.	TEMP. ON	27°C	SAMPLED AT	8:25			
	PH - ON	—					
EFFLUENT	TEMP - ON	27°C	SAMPLED AT	8:30			
	PH - ON	—					
	Cl. Residual	1 PPM					
	CHLORINE-ON						
	CHLORINE-OFF						
	ON-OFF-lbs						

DATE	WASTE CHARACTERISTICS	PLANT OPERATION	AUTO. SAMPLER OPERATION	SAMPLES COLLECTED BY
12-3-70		EXCELLENT EFFLUENT VERY CLEAR	—	SCHANG
		(NEW FACILITY)		

LOWER FLORIDA ESTUARY STUDY
DADE COUNTY WASTE SOURCE INVENTORY
TREATMENT PLANT – SCHEMATIC DIAGRAM

PLANT MIDWAY MALL

DRAW COMPLETE FLOW DIAGRAM OF TREATMENT PLANT AND OUTFALL. LABEL EACH UNIT. SHOW LOCATIONS OF SAMPLE COLLECTION AND FLOW MEASURING DEVICES

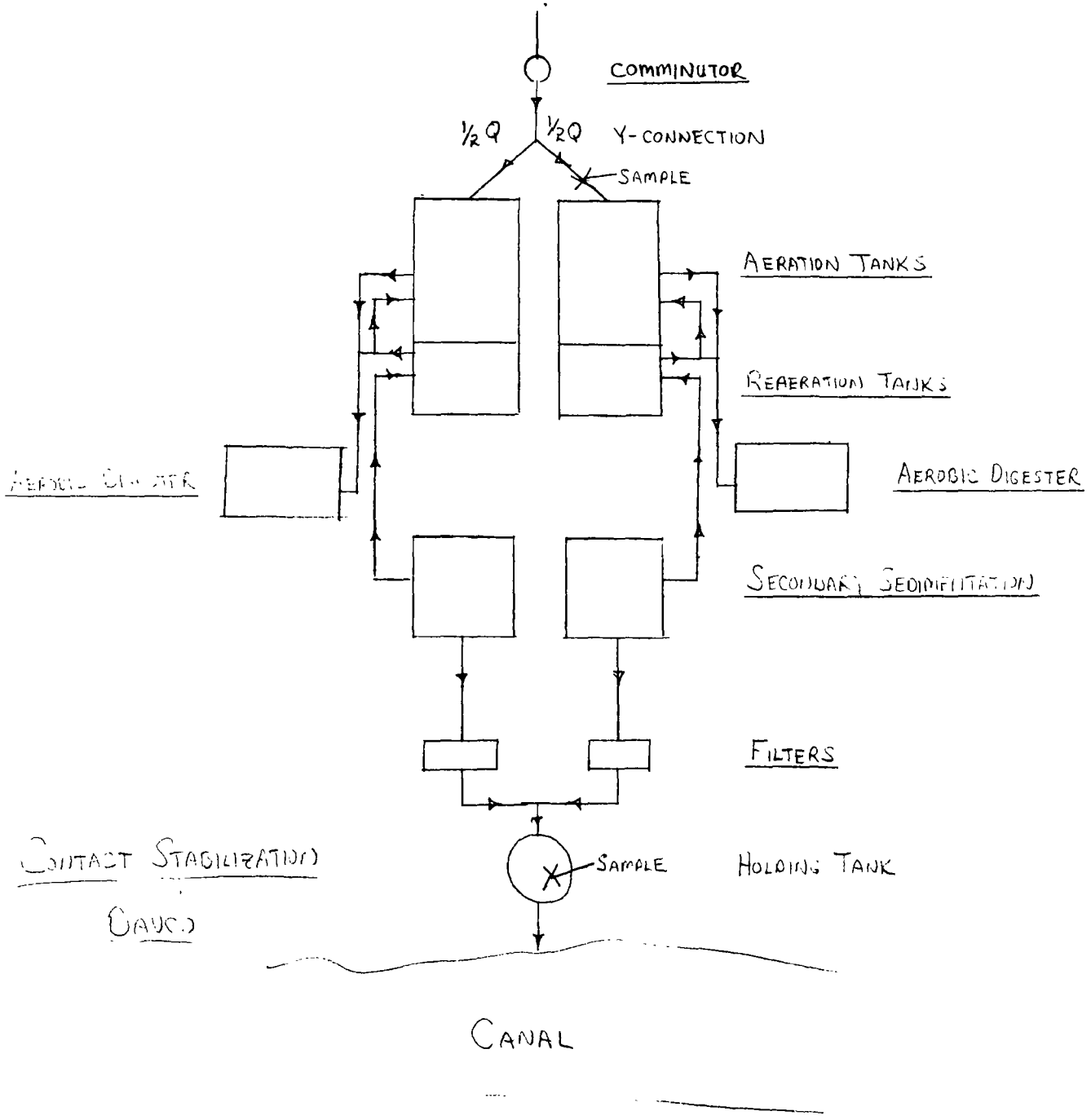

PREPARED BY: KW Schang

Sheet ___ of _____

LOWER FLORIDA ESTUARY STUDY
DADE COUNTY WASTE SOURCE INVENTORY
INFLUENT – EFFLUENT – DATA SUMMARY

PLANT Midway Mall

							AVERAGE
DATE - OFF		12/8					
FLOW - MGD		.06					
5 DAY B O D mg/l	INFLUENT	259					
	EFFLUENT	4.5					
	IN - OUT						
	% REMOVAL	98.3					
	LOAD-lbs/day	2.25	2.25				
C O D mg/l	INFLUENT	659					
	EFFLUENT	38					
	IN - OUT						
	% REMOVAL	94.2					
	LOAD -lbs/day	19	19				
T S S mg/l	INFLUENT	384					
	EFFLUENT	47					
	IN - OUT						
	% REMOVAL	87.8					
	LOAD- lbs/day	23.5	23.5				
V S S mg/l	INFLUENT	84					
	EFFLUENT	43					
	IN - OUT						
	% REMOVAL	48.8					
	LOAD –lbs/day	21.5	21.5				
Settlable Solids ml/l	INFLUENT	3					
	EFFLUENT	nil					
	IN - OUT						
	% REMOVAL	100					
T O C mg/l	INFLUENT	157.5					
	EFFLUENT	9					
	IN - OUT						
	% REMOVAL	94.3					
	LOAD - lbs/day	4.5	4.5				

INFLUENT BOD POPULATION EQUIVALENT = 748 748

EFFLUENT BOD POPULATION EQUIVALENT = 13 13

LOAD = FLOW (MGD) x EFFLUENT (mg/l) x 8.34 = lbs/day

From The Desk Of
Michael V. Polito

Sheet____ of_____

LOWER FLORIDA ESTUARY STUDY
DADE COUNTY WASTE SOURCE INVENTORY
EFFLUENT DATA SUMMARY

PLANT Midway Mall

							AVERAGE or MEDIAN*
DATE - OFF		12/8					
FLOW - MGD		1.7 .06					
KTELDAHL NITROGEN as N	CONC.-mg/l	[illegible]*					
	LOAD-lbs/day	.85	.85				
AMMONIA NITROGEN as N	CONC.-mg/l	1.0					
	LOAD-lbs/day	.5	.5				
ORGANIC NITROGEN as N	CONC.-mg/l	0.7					
	LOAD-lbs/day	.35	.35				
NO_2 -NO_3 as N	CONC.-mg/l	3.4					
	LOAD-lbs/day	1.7	1.7				
TOTAL PHOSPHORUS AS P	CONC.-mg/l	0.8					
	LOAD-lbs/day	.4	.4				
CHLORIDE	CONC.-mg/l	46					
TOTAL COLIFORM	CONC - MPN/100ml						
Fecal COLIFORM	CONC - MPN/100ml						

*Calculate Median for Total & Fecal Coliform Concentrations and Average for All Other Parameters.

*CORRECTION: Kjeldahl-N is 1.7 mg/L W.E.S.

Lower Florida Estuary Study
Report on Waterborne Wastes from
Miller Lake Apartments Sewage Treatment Plant
5500 S.W. 77th Court
Westwood Lakes, Dade County, Florida
March 19, 1971

INTRODUCTION

The Miller Lake Apartments Sewage Treatment Plant was inspected and sampled on January 12, 1971 by Kenneth Schang. Grab samples of the influent and effluent after chlorination were obtained. The plant consists of a W & S Contact Stabilization package unit with tertiary filtration and chlorination prior to discharge to a soakage pit.

SUMMARY AND CONCLUSIONS

BOD removal was 70.9% effective, and the effluent concentration was 46 mg/l.

The influent total suspended solids concentration of 124 mg/l was reduced 79% to 26 mg/l.

A chlorine residual of 0.25 ppm was measured in the effluent immediately prior to discharge.

INVENTORY

1. Basket strainer.
2. Aerated surge tank, diffused air system.
3. Contact tank; diffused air system.
4. Secondary sedimentation.
5. Stabilization tank, diffused air system.

6. Equalizing tank and chlorination.

7. Jetflo tertiary filtration.

8. Dosing tank.

9. Aerobic digester, diffused air system.

DISCUSSION

An influent settleable solids level of 2 ml/l was reduced to zero ml/l in the effluent. Total suspended solids were reduced 79% to 26 mg/l with a corresponding stream loading of 0.65 lbs. per day based on the measured flow of 0.003 MGD.

BOD, COD and TOC removal efficiencies were 70.9, 65.7 and 30% respectively with corresponding effluent concentrations of 46, 136 and 42 mg/l and loadings of 1.15, 3.4 and 1.05 lbs. per day respectively.

Nutrient effluent concentrations and loadings for ammonia nitrogen, nitrate-nitrite as N, and organic nitrogen were as follows: 20.0 mg/l, 0.5 lbs. per day; 0.04 mg/l, .001 lbs. per day; and 2.3 mg/l, 0.058 lbs. per day. The total phosphorus concentration in the effluent was 12.1 mg/l.

RECOMMENDATIONS

Based on the chemical evaluation this treatment plant is not effecting the design removal efficiencies. From the visual inspection no conclusions could be made excepting that the plant does not have adequate solids levels built up because it is a relatively new facility. An additional evaluation is recommended at some later time.

The plant is maintained by a class "C" operator.

Kenneth Schang

LOWER FLORIDA ESTUARY STUDY
DADE COUNTY WASTE SOURCE INVENTORY
TREATMENT PLANT – GENERAL INFORMATION

DATE OF VISIT 1-12-71
PLANT NAME: MILLER LAKE APARTMENTS
PLANT OWNER: MILLER LAKE APARTMENTS
ADDRESS 5500 S.W. 77 COURT
TELEPHONE 274-6434
COLLECTION SYSTEM – TYPE: SEAVES APARTMENT COMPLEX
OWNER: MILLER LAKE APARTMENTS
ADDRESS: 5500 S.W. 77 COURT
TELEPHONE 274-6434

DESIGN | AVERAGE DESIGN FLOW: .05 MGD YEAR COMPLETED: 1970
STREAM FLOW NA cfs | DURATION NA days FREQUENCY NA Yrs
CONSTRUCTION COST 135,000
POPULATION SERVED APPROXIMATELY 500 PEOPLE

OPERATION | ANNUAL COST NOT DETERMINABLE
PERSONNEL
LEVEL OF CERTIFICATION CLASS "C" OPERATOR
CONDITION OF EQUIPMENT NEW PLANT
OUTFALL | TYPE GRAVITY SIZE – LENGTH –
DISCHARGED TO: SOAKAGE PIT WATER COURSE MILEAGE: NA
LATITUDE – LONGITUDE –
TREATMENT | (LIST UNITS IN ORDER, EXCLUDING SLUDGE TREATMENT & DISPOSAL)

BASKET STRAINER, AERATED SURGE TANK, CONTACT TANK, SECONDARY SEDIMENTATION, STABILIZATION TANK, EQUALIZING TANK + CHLORINATION, TERTIARY FILTERS, DOSING TANK, SOAKAGE PIT.

CONTACT STABILIZATION

SLUDGE | TREATMENT AEROBIC DIGESTER

DISPOSAL TRUCKED AWAY

REMARKS | NEW PLANT

PREPARED BY: KW Schang

Sheet 2 of 3

LOWER FLORIDA ESTUARY STUDY
DADE COUNTY WASTE SOURCE INVENTORY
TREATMENT PLANT FIELD SHEET

PLANT MILLER LAKE APARTMENTS

							AVERAGE
DATE ON		1-12-71					
TIME ON		11:15					
DATE OFF		1-12-71					
TIME OFF		11:45					
FLOW	START	1.5 INCHES 45° V-NOTCH WEIR					
	END	.003 MGD					
	TOTAL						
	24 hr. Flow Rate						
INF.	TEMP. ON	36° F					
	PH - ON	-					
EFFLUENT	TEMP - ON	30° F					
	PH - ON	-					
	Cl. Residual	.25 ppm					
	CHLORINE-ON						
	CHLORINE-OFF						
	ON-OFF-lbs						

DATE	WASTE CHARACTERISTICS	PLANT OPERATION	AUTO. SAMPLER OPERATION	SAMPLES COLLECTED BY
1-12-71	AVERAGE - TURBIDITY	NEW PLANT - LOW SOLIDS IN AERATION TANK	-	SCHANG

LOWER FLORIDA ESTUARY STUDY
DADE COUNTY WASTE SOURCE INVENTORY
TREATMENT PLANT – SCHEMATIC DIAGRAM

PLANT Miller Lake Apartments

DRAW COMPLETE FLOW DIAGRAM OF TREATMENT PLANT AND OUTFALL. LABEL EACH UNIT. SHOW LOCATIONS OF SAMPLE COLLECTION AND FLOW MEASURING DEVICES

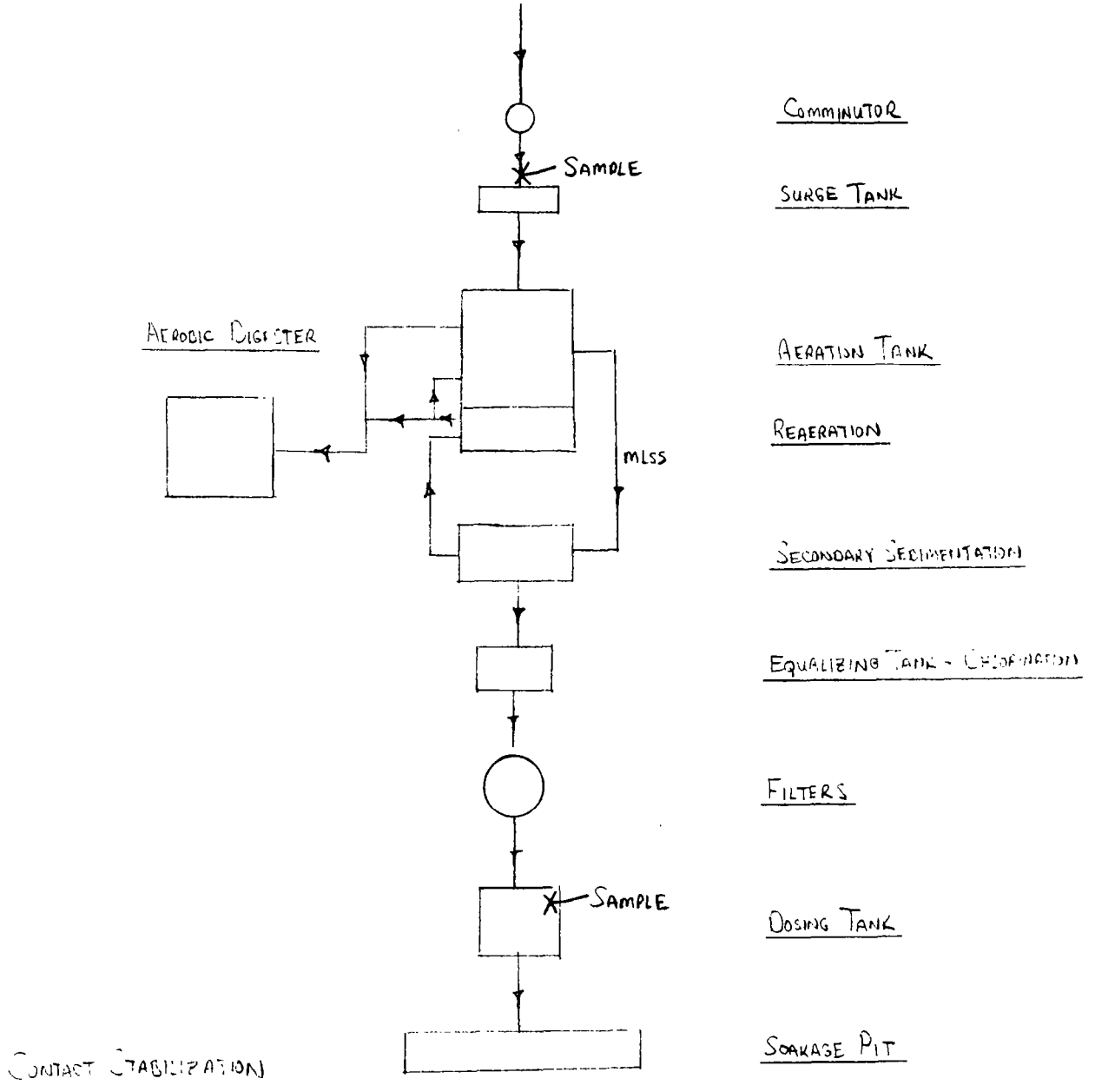

PREPARED BY: KW Schang

Sheet ___ of _____

LOWER FLORIDA ESTUARY STUDY
DADE COUNTY WASTE SOURCE INVENTORY
INFLUENT – EFFLUENT – DATA SUMMARY

PLANT Miller Lake Apartments

							AVERAGE
DATE - OFF		1/12/71					
FLOW - MGD		.003					
5 DAY B O D mg/l	INFLUENT	158					
	EFFLUENT	46					
	IN - OUT						
	% REMOVAL	70.9					
	LOAD-lbs/day	1.15					
C O D mg/l	INFLUENT	397					
	EFFLUENT	136					
	IN - OUT						
	% REMOVAL	65.7					
	LOAD -lbs/day	3.4					
T S S mg/l	INFLUENT	124					
	EFFLUENT	26					
	IN - OUT						
	% REMOVAL	79.0					
	LOAD- lbs/day	.65					
V S S mg/l	INFLUENT	96					
	EFFLUENT	14					
	IN - OUT						
	% REMOVAL	85.4					
	LOAD –lbs/day	.35					
Settlable Solids ml/l	INFLUENT	2					
	EFFLUENT	0.0					
	IN - OUT						
	% REMOVAL	100					
T O C mg/l	INFLUENT	60					
	EFFLUENT	42					
	IN - OUT						
	% REMOVAL	30					
	LOAD - lbs/day	1.05					

INFLUENT BOD POPULATION EQUIVALENT = 23 3.95

EFFLUENT BOD POPULATION EQUIVALENT = 7 1.15

LOAD = FLOW (MGD) x EFFLUENT (mg/l) x 8.34 = lbs/day

Released
From The Desk Of
Michael V. Polito MP

LOWER FLORIDA ESTUARY STUDY
DADE COUNTY WASTE SOURCE INVENTORY
EFFLUENT DATA SUMMARY

Sheet____ of_____

PLANT Miller Lake Apartments

							AVERAGE or MEDIAN*
DATE - OFF		1/12					
FLOW - MGD		.003					
KTELDAHL NITROGEN as N	CONC.-mg/l	22.3					
	LOAD-lbs/day	.56					
AMMONIA NITROGEN as N	CONC.-mg/l	20.0					
	LOAD-lbs/day	.5					
ORGANIC NITROGEN as N	CONC.-mg/l	2.3					
	LOAD-lbs/day	.058					
NO_2 -NO_3 as N	CONC.-mg/l	0.04					
	LOAD-lbs/day	.001					
TOTAL PHOSPHORUS AS P	CONC.-mg/l	12.1					
	LOAD-lbs/day	.3					
CHLORIDE	CONC.-mg/l	71					
TOTAL COLIFORM	CONC - MPN/100ml						
Fecal COLIFORM	CONC - MPN/100ml						

*Calculate Median for Total & Fecal Coliform Concentrations and Average for All Other Parameters.

Lower Florida Estuary Study
Report on Waterborne Wastes from
Monsignor Pace High School Sewage Treatment Plant
15600 N.W. 32nd Avenue
Opa Locka, Dade County, Florida
February 23, 1971

INTRODUCTION

The Monsignor Pace High School Sewage Treatment Plant was inspected and sampled on December 1, 1970 by Kenneth Schang and Frank Ansley (Dade County Pollution Control Inspector). Grab samples of the influent and effluent after chlorination were obtained. The extended aeration treatment process is utilized with chlorination prior to discharge to the Biscayne Canal. The inspection was conducted in conjunction with Brother Clement who operates and maintains the system.

SUMMARY AND CONCLUSIONS

Treatment efficiency was variable. BOD removal approached 87% with an effluent concentration of 17 mg/l and a loading of 4.25 lbs. per day being placed on the Biscayne Canal.

Total suspended solids removal efficiency was 67.3%, with 8.51 lbs. per day being discharged based on the average design flow of .03 MGD and an effluent concentration of 34 mg/l.

Adequate chlorination was provided with the effluent containing a 1.8 ppm residual.

A flow meter is required at this plant.

INVENTORY

1. Bar rack and comminutor in parallel, at influent to wet well.
2. Aeration tank.
3. Secondary sedimentation.
4. Chlorine contact chamber.
5. Anaerobic digestion, sludge holding tank.

RESULTS

Based on the average design flow of .03 MGD, the BOD_5, COD and TOC loadings were 4.25, 14.26 and 4.75 lbs. per day respectively, with effluent concentrations equalling 17, 57 and 19 mg/l respectively, and removal efficiencies of 86.9, 91.4 and 81.9% respectively.

Solids removal was somewhat less successful: total suspended solids were 67.3% removal with 34 mg/l or 8.51 lbs. per day being discharged to Biscayne Canal. Settleable solids were measurable at .1 ml/l in the effluent with only .2 ml/l present in the influent.

Nutrient loadings were: ammonia nitrogen 1.50 lbs. per day, nitrate-nitrite nitrogen 7.13 lbs. per day, and total phosphorus 2.13 lbs. per day. The relatively high concentration of nitrate-nitrite nitrogen (28.5 mg/l) provided evidence of long detention times, allowing sufficient time for excessive nitrification, implying that average flow is less than the design flow.

DISCUSSION

The plant is in poor mechanical condition. It is recommended that the necessary funds be provided to place the treatment plant

back in good working order.

The aeration tank appeared to have a low solids level, possibly induced by a low loading condition because of the average daily flow being less than the design flow.

Brother Clement is not a licensed treatment plant operator.

Kenneth Schang

LOWER FLORIDA ESTUARY STUDY
DADE COUNTY WASTE SOURCE INVENTORY
TREATMENT PLANT – GENERAL INFORMATION

DATE OF VISIT 12-1-70
PLANT NAME: MONSIGNOR PACE HIGH SCHOOL
PLANT OWNER: MONSIGNOR PACE HIGH SCHOOL
ADDRESS 15600 N.W. 32 AVENUE
TELEPHONE 624-8534 EXT. 0
COLLECTION SYSTEM – TYPE: SERVES HIGH SCHOOL AND HOUSING FOR INSTRUCTORS
OWNER: MONSIGNOR PACE HIGH SCHOOL
ADDRESS: 15600 N.W. 32 AVENUE
TELEPHONE 624-8534 EXT. 0

DESIGN | AVERAGE DESIGN FLOW: .03 MGD YEAR COMPLETED: 1963
STREAM FLOW -- cfs | DURATION – days FREQUENCY – Yrs STREAM DATA NOT KNOWN
CONSTRUCTION COST NOT KNOWN
POPULATION SERVED [illegible] ROOMS 750 PEOPLE

OPERATION | ANNUAL COST NOT KNOWN
PERSONNEL [illegible]
LEVEL OF CERTIFICATION [illegible]
CONDITION OF EQUIPMENT FAIR TO [illegible]
OUTFALL | TYPE [illegible] SIZE 8 [illegible] LENGTH 260 FEET
DISCHARGED TO: [illegible] WATER COURSE MILEAGE:
LATITUDE LONGITUDE
TREATMENT | (LIST UNITS IN ORDER, EXCLUDING SLUDGE TREATMENT & DISPOSAL)
[illegible] BLOCK, COMMUNITY AERATION TANK, [illegible] CHLORINATION, [illegible] MARINE CONTACT.

SLUDGE | TREATMENT ANAEROBIC DIGESTION - SLUDGE HOLDING TANK

DISPOSAL TRUCKED [illegible]

REMARKS | PLANT IS OLD AND IN NEED OF REPAIR
[illegible] DIFFICULTY MAINTAINING [illegible] OPERATION
[illegible]

PREPARED BY: K.W. Schaing

Sheet 2 of 3

LOWER FLORIDA ESTUARY STUDY
DADE COUNTY WASTE SOURCE INVENTORY
TREATMENT PLANT FIELD SHEET

PLANT MONSIGNOR PACE HIGH SCHOOL

							AVERAGE
DATE ON		12-1-70					
TIME ON		3:00					
DATE OFF		12-1-70					
TIME OFF		3:45					
FLOW	START	No Flow					
	END	Meter					
	TOTAL						
	24 hr. Flow Rate						
INF.	TEMP. ON	57°C	Sampled at 3:30				
	PH - ON						
EFFLUENT	TEMP - ON	57°C	Sampled at 3:35				
	PH - ON						
	Cl. Residual	1.3 PPM					
	CHLORINE-ON						
	CHLORINE-OFF						
	ON-OFF-lbs						

DATE	WASTE CHARACTERISTICS	PLANT OPERATION	AUTO. SAMPLER OPERATION	SAMPLES COLLECTED BY
[illegible]		Fair - [illegible]	–	Sowers
	Turbid	Contributes to [illegible]. All unit processes in operation		
		No Flow Meter		

LOWER FLORIDA ESTUARY STUDY
DADE COUNTY WASTE SOURCE INVENTORY
TREATMENT PLANT – SCHEMATIC DIAGRAM

PLANT PACE HIGH SCHOOL

DRAW COMPLETE FLOW DIAGRAM OF TREATMENT PLANT AND OUTFALL. LABEL EACH UNIT. SHOW LOCATIONS OF SAMPLE COLLECTION AND FLOW MEASURING DEVICES

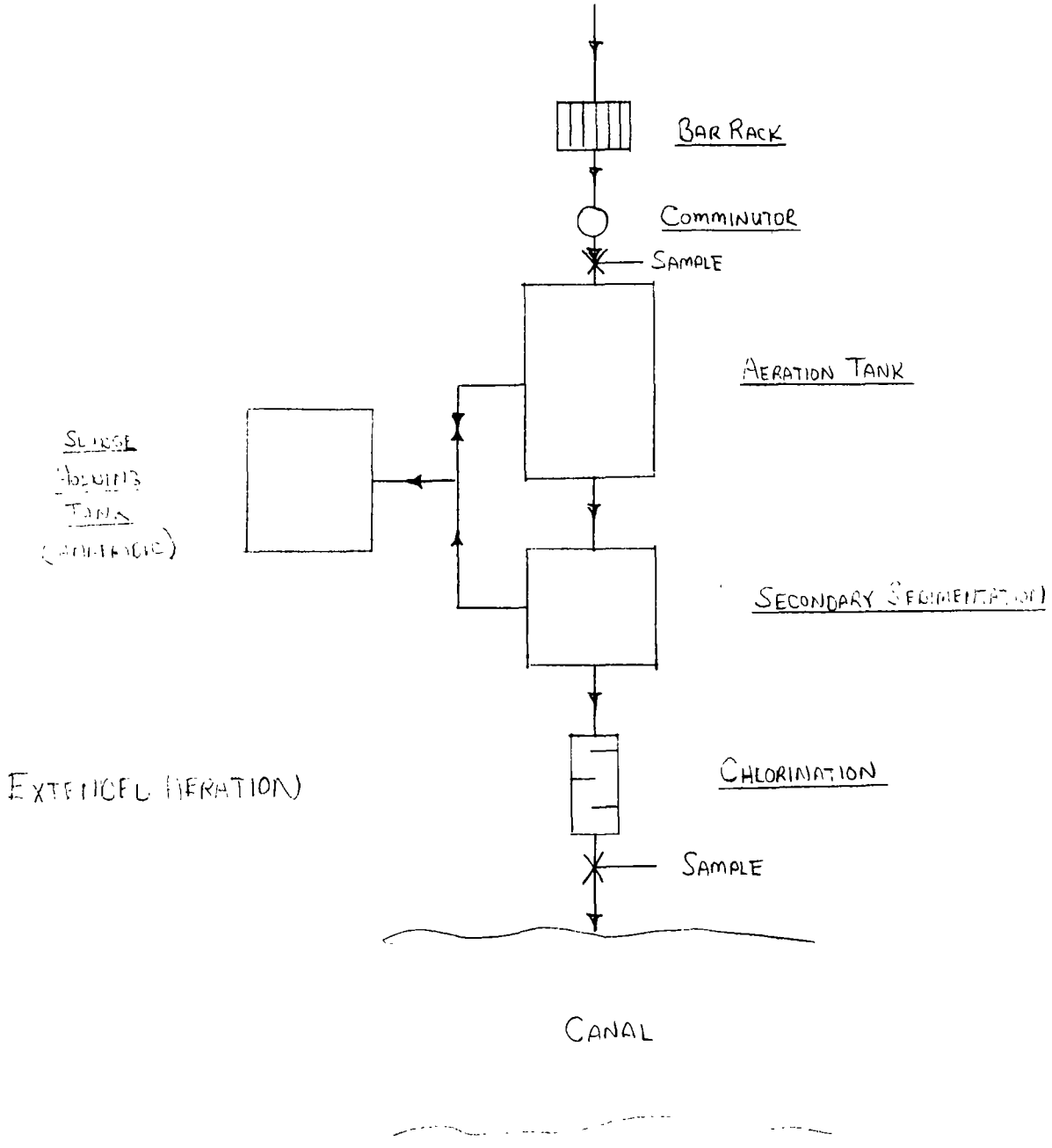

PREPARED BY: KW Chang

Sheet ___ of _____

LOWER FLORIDA ESTUARY STUDY
DADE COUNTY WASTE SOURCE INVENTORY
INFLUENT – EFFLUENT – DATA SUMMARY

PLANT Pace H.S.

							AVERAGE
DATE - OFF		12/1/70					
FLOW - MGD		.03					
5 DAY B O D mg/l	INFLUENT	130					
	EFFLUENT	17					
	IN - OUT	113					
	% REMOVAL	86.9					
	LOAD-lbs/day	4.25					
C O D mg/l	INFLUENT	666					
	EFFLUENT	57					
	IN - OUT	609					
	% REMOVAL	91.4					
	LOAD -lbs/day	14.26					
T S S mg/l	INFLUENT	104					
	EFFLUENT	34					
	IN - OUT	70					
	% REMOVAL	67.3					
	LOAD- lbs/day	8.51					
V S S mg/l	INFLUENT	N.R.					
	EFFLUENT	N.R.					
	IN - OUT						
	% REMOVAL						
	LOAD –lbs/day						
Settlable Solids ml/l	INFLUENT	0.2					
	EFFLUENT	0.1					
	IN - OUT	0.1					
	% REMOVAL	50					
T O C mg/l	INFLUENT	105					
	EFFLUENT	19					
	IN - OUT	86					
	% REMOVAL	81.9					
	LOAD - lbs/day	4.75					

INFLUENT BOD POPULATION EQUIVALENT = 191

EFFLUENT BOD POPULATION EQUIVALENT = 25

LOAD = FLOW (MGD) x EFFLUENT (mg/l) x 8.34 = lbs/day

From The Desk Of
Michae V. Pol'to

Sheet____ of_____

LOWER FLORIDA ESTUARY STUDY
DADE COUNTY WASTE SOURCE INVENTORY
EFFLUENT DATA SUMMARY

PLANT Pace H.S.

							AVERAGE or MEDIAN*
DATE - OFF		12/1/70					
FLOW - MGD		.03					
KTELDAHL NITROGEN as N	CONC.-mg/l	7.3					
	LOAD-lbs/day	1.83					
AMMONIA NITROGEN as N	CONC.-mg/l	6.0					
	LOAD-lbs/day	1.50					
ORGANIC NITROGEN as N	CONC.-mg/l	1.3					
	LOAD-lbs/day	.32					
NO_2 -NO_3 as N	CONC.-mg/l	28.5					
	LOAD-lbs/day	7.13					
TOTAL PHOSPHORUS AS P	CONC.-mg/l	8.5					
	LOAD-lbs/day	2.13					
CHLORIDE	CONC.-mg/l	—					
	LOAD-lbs/day	108.0					
TOTAL COLIFORM	CONC - MPN/100ml						
Fecal COLIFORM	CONC - MPN/100ml						

*Calculate Median for Total & Fecal Coliform Concentrations and Average for All Other Parameters.

Lower Florida Estuary Study
Operation Report on
My-Am-EE Mobile Home Park Sewage Treatment Plant
9000 S.W. Grand Canal Drive
Miami, Dade County, Florida
January 25, 1971

INTRODUCTION

The My-Am-EE Mobile Home Park Sewage Treatment Plant was inspected and sampled on December 17, 1970, by Kenneth Schang and Gary Cohen (Dade County Pollution Control Inspector). Grab samples of the influent and effluent prior to chlorination were obtained. The facility incorporates a Chicago Pump Extended Aeration package system with an oxidation pond to treat waste prior to the effluent being discharged into the Tamiami Canal. Inspection was conducted in conjunction with Gene Schley who maintains the treatment plant.

SUMMARY AND CONCLUSIONS

Design capacity for the treatment plant is .03 MGD with effluent BOD_5 concentration at 21.5 ppm. Although this is a removal efficiency of 96.3% the loading placed on the canal is 5.38 lbs. per day. Although an effluent settleable solids concentration of .2 ml/l was present, it is noted that the oxidation pond should restrict the discharge of any settleable solids inherent to an activated sludge system.

The plant accomplished 90% + removal of all chemical parameters utilized in the evaluation excepting total organic carbon where efficiency dropped to 75%. Based on these data the system must be classified as "good" with regard to operating efficiency standards for Dade County.

INVENTORY

The treatment plant incorporates:

1. Comminutor

2. Two aeration tanks in parallel, diffused air systems, with 15,000 GPD capacity each.

3. Two secondary sedimentation tanks in parallel, 15,000 GPD capacity each.

4. Oxidation pond receiving the combined effluents.

5. Chlorination of the overflow from the oxidation pond.

6. Aerobic holding tank for waste sludge, with disposal by septic tank truck.

RESULTS

Effluent BOD_5, COD and TOC concentrations were 21.5 ppm, 100 ppm and 57 ppm respectively, which constitutes a treatment efficiency of 96.3, 95.8 and 75.2% with respect to these chemical parameters.

A .2 ml/l settleable solids concentration produced a removal efficiency of 99.9%.

Chlorine residual was 10 ppm, substantially above the accepted criteria, and contact time should provide for a thorough bacterial kill.

Nutrient loadings for NH_3-N, nitrate-nitrite, and total phosphorus were 2.23, .05 and 3.83 lbs. per day, based on effluent concentrations of 8.9, 0.2 and 15.3 mg/l for the average design flow.

DISCUSSION

The oxidation pond contained considerable organic solids which might hamper the treatment process. It is recommended that this situation be corrected by periodic cleaning of the pond. In addition, aeration by a diffused air system could improve the overall treatment by providing sufficient oxygen even on days of retarded biological activity.

A scum on the aeration tanks was noted. This might contribute to a lowered treatment efficiency and should be investigated.

If possible, utilization of a drainfield to accept the effluent should be substituted for the present canal discharge.

The treatment plant had a "good" overall appearance although minor attention should be paid to the sludge present in the oxidation pond.

None of the maintenance personnel were licensed as operators although Mr. Gene Schley was attending a short course to aid in exam preparation.

Kenneth Schang

LOWER FLORIDA ESTUARY STUDY
DADE COUNTY WASTE SOURCE INVENTORY
TREATMENT PLANT – GENERAL INFORMATION

DATE OF VISIT 12-17-70
PLANT NAME: My. Am. Fe Mobile Home Park
PLANT OWNER: My. Am. Fe Mobile Home Park
ADDRESS 9000 S.W. Grand Canal Drive
TELEPHONE —
COLLECTION SYSTEM – TYPE: Serves Mobile Home Park
OWNER: My-Am-Fe Mobile Home Park
ADDRESS: 9000 S.W. Grand Canal Drive
TELEPHONE —

DESIGN AVERAGE DESIGN FLOW: .03 MGD YEAR COMPLETED: 1968 & 1970 (2 Plants)
STREAM FLOW NK cfs | DURATION NK days FREQUENCY NK Yrs
CONSTRUCTION COST
POPULATION SERVED

OPERATION ANNUAL COST
PERSONNEL – (Operator)
LEVEL OF CERTIFICATION
CONDITION OF EQUIPMENT Good

OUTFALL TYPE Gravity SIZE 3 inch LENGTH 400 Feet
DISCHARGED TO: Grand Canal WATER COURSE MILEAGE:
LATITUDE LONGITUDE

TREATMENT (LIST UNITS IN ORDER, EXCLUDING SLUDGE TREATMENT & DISPOSAL)

Chlorine Pump - Extended Aeration

SLUDGE TREATMENT Holding Tank

DISPOSAL

REMARKS

PREPARED BY: KW Schrang

Sheet 2 of 3

LOWER FLORIDA ESTUARY STUDY
DADE COUNTY WASTE SOURCE INVENTORY
TREATMENT PLANT FIELD SHEET

PLANT MY-AM-EE MOBILE HOME PARK

							AVERAGE
DATE ON		12-17-70					
TIME ON		10:00					
DATE OFF		12-17-70					
TIME OFF		10:45					
FLOW	START	NO FLOW					
	END	METER					
	TOTAL	NO METER					
	24 hr. Flow Rate						
INF.	TEMP. ON	21°C	SAMPLED AT	10:35			
	PH - ON	-					
EFFLUENT	TEMP - ON	21°C	SAMPLED AT	10:30			
	PH - ON	-					
	Cl. Residual	10 PPM					
	CHLORINE-ON						
	CHLORINE-OFF						
	ON-OFF-lbs						

DATE	WASTE CHARACTERISTICS	PLANT OPERATION	AUTO. SAMPLER OPERATION	SAMPLES COLLECTED BY
12-17-70	SEPTAGE IS PUMPED FROM HOLDING TANK TO SEPTAGE BED, AND ON LS. EFFLUENT SAMPLED FROM DISCHARGE SIDE	SOLIDS AERATION TANK. SEPTAGE TO DISCHARGE SIDE	-	SCHANG

LOWER FLORIDA ESTUARY STUDY
DADE COUNTY WASTE SOURCE INVENTORY
TREATMENT PLANT – SCHEMATIC DIAGRAM

PLANT My-Am-Ee Mobile Home Park

DRAW COMPLETE FLOW DIAGRAM OF TREATMENT PLANT AND OUTFALL. LABEL EACH UNIT. SHOW LOCATIONS OF SAMPLE COLLECTION AND FLOW MEASURING DEVICES

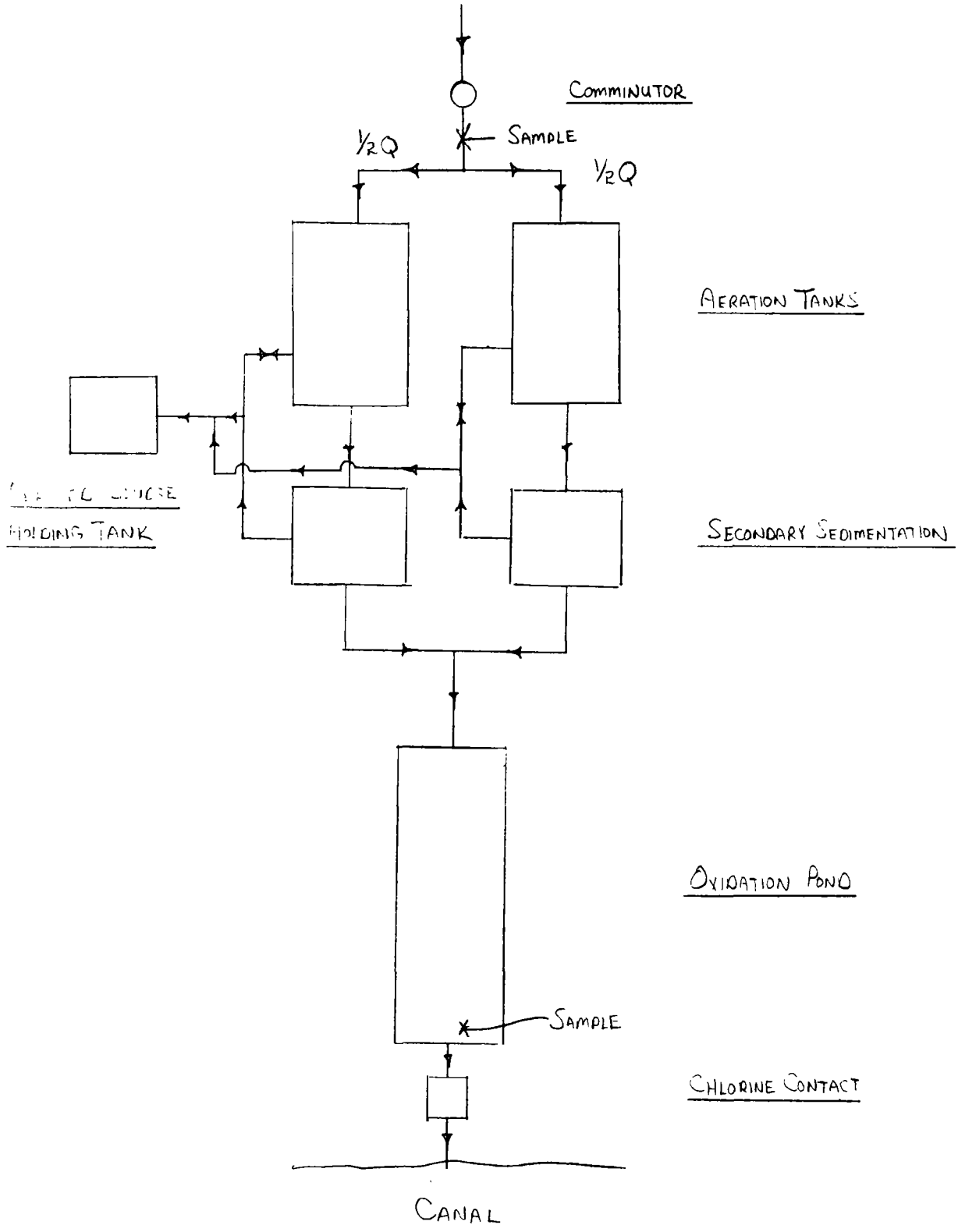

PREPARED BY: KW Schang

Sheet ___ of _____

LOWER FLORIDA ESTUARY STUDY
DADE COUNTY WASTE SOURCE INVENTORY
INFLUENT – EFFLUENT – DATA SUMMARY

PLANT Am - EE.

		DATE - OFF	12/17/70					AVERAGE
FLOW - MGD			.03					
5 DAY B O D mg/l	INFLUENT		575					
	EFFLUENT		21.5					
	IN - OUT		553.5					
	% REMOVAL		96.3					
	LOAD-lbs/day		5.38					
C O D mg/l	INFLUENT		2,395					
	EFFLUENT		100					
	IN - OUT		2295					
	% REMOVAL		95.8					
	LOAD -lbs/day		25					
T S S mg/l	INFLUENT		610					
	EFFLUENT		25					
	IN - OUT		815					
	% REMOVAL		97.0					
	LOAD- lbs/day		6.26					
V S S mg/l	INFLUENT		710					
	EFFLUENT		27					
	IN - OUT		713					
	% REMOVAL		96.4					
	LOAD –lbs/day		6.76					
Settlable Solids ml/l	INFLUENT		740					
	EFFLUENT		.2					
	IN - OUT		7398					
	% REMOVAL		99.9					
T O C mg/l	INFLUENT		230					
	EFFLUENT		57					
	IN - OUT		173					
	% REMOVAL		75 2					
	LOAD - lbs/day		14.26					

INFLUENT BOD POPULATION EQUIVALENT = 856

EFFLUENT BOD POPULATION EQUIVALENT = 32

LOAD = FLOW (MGD) x EFFLUENT (mg/l) x 8.34 = lbs/day

Load based on design flow of 0.03 mgd.

LOWER FLORIDA ESTUARY STUDY
DADE COUNTY WASTE SOURCE INVENTORY
EFFLUENT DATA SUMMARY

Sheet____ of_____

PLANT Mg AM CC

							AVERAGE or MEDIAN*
DATE - OFF		12/17					
FLOW - MGD							
KTELDAHL NITROGEN as N	CONC.-mg/l	11.8					
	LOAD-lbs/day	2.95					
AMMONIA NITROGEN as N	CONC.-mg/l	8.9					
	LOAD-lbs/day	2.23					
ORGANIC NITROGEN as N	CONC.-mg/l	2.9					
	LOAD-lbs/day	.73					
NO_2 -NO_3 as N	CONC.-mg/l	0.2					
	LOAD-lbs/day	.05					
TOTAL PHOSPHORUS AS P	CONC.-mg/l	15.3					
	LOAD-lbs/day	3.83					
CHLORIDE	CONC.-mg/l	54					
TOTAL COLIFORM	CONC - MPN/100ml						
Fecal COLIFORM	CONC - MPN/100ml						

*Calculate Median for Total & Fecal Coliform Concentrations and Average for All Other Parameters.

Load based on design flow of 0.03 MGD

Lower Florida Estuary Study
Report on Waterborne Wastes from
Naval Air Station Sewage Treatment Plant
S.W. 122nd Avenue and 152nd Street
Howard, Dade County, Florida
March 19, 1971

INTRODUCTION

The Naval Air Station Sewage Treatment Plant was inspected and sampled on January 12, 1971 by Kenneth Schang. Grab samples of the influent and effluent prior to chlorination were obtained. The treatment plant utilized the conventional activated sludge process with chlorination prior to discharge to a drainfield. The inspection was conducted in conjunction with a member of the maintenance crew that operates the plant.

SUMMARY AND CONCLUSIONS

An influent BOD concentration of 39.5 mg/l was reduced 31.6% to 27 mg/l.

Total suspended solids removal efficiency was 45.8% and the effluent concentration was 26 mg/l.

At the time of inspection the chlorination system was not operating properly and there was no chlorine residual measurable in the effluent.

The operation of the treatment plant is not conducted by a licensed operator.

INVENTORY

1. Bar screen.
2. Primary sedimentation.

3. Aeration tanks, mechanical aeration.

4. Secondary sedimentation.

5. Chlorination.

6. Anaerobic sludge digester; waste sludge to drying beds.

DISCUSSION

(Loadings are insignificant due to the low flow condition and the absence of any flow measuring devices.)

BOD, COD and TOC effluent concentrations were 27, 66 and 12 mg/l respectively with corresponding removal efficiencies of 31.6, 89.4 and 67.6%.

The low settleable solids influent level of 0.5 ml/l was reduced to zero ml/l in the effluent. Total suspended solids removal efficiency was 45.8% for an effluent concentration of 26 mg/l.

Effluent concentrations for ammonia nitrogen, nitrate-nitrite as N, and total phosphorus were 9.1, 0.01 and 7.1 mg/l respectively.

RECOMMENDATIONS

Most of the operational problems noticed could be corrected by a licensed operator. The retention of a licensed operator to take over plant operation is of primary concern.

Generally the plant is underloaded, and the mixed liquor suspended solids were not of sufficient concentration to effect proper treatment. Since the plant is comprised of two systems operating in parallel, a total shut down of one unit may help the low loading condition.

At the time of inspection, the chlorination system was not in operation. Closer inspections of this system are recommended.

The capacity of the mechanical aerators to provide adequate dissolved oxygen appeared questionable due to their size and design. Since the plant was constructed in 1942, installation of more modern aerator units might facilitate the treatment process.

Overall plant appearance was not adequate. Although all mechanical units were operational the total plant system needed additional work and maintenance.

Kenneth Schang

LOWER FLORIDA ESTUARY STUDY
DADE COUNTY WASTE SOURCE INVENTORY
TREATMENT PLANT – GENERAL INFORMATION

DATE OF VISIT 1-12-71
PLANT NAME: NAVAL AIR STATION
PLANT OWNER: FEDERAL GOVERNMENT
ADDRESS S.W. 122 AVENUE & 152 STREET
TELEPHONE —
COLLECTION SYSTEM – TYPE: SERVES BASE
OWNER: FEDERAL GOVERNMENT
ADDRESS: S.W. 122 AVENUE & 152 STREET
TELEPHONE —

DESIGN AVERAGE DESIGN FLOW: .15 MGD YEAR COMPLETED: 1942
STREAM FLOW — cfs DURATION — days FREQUENCY — Yrs
CONSTRUCTION COST NOT KNOWN
POPULATION SERVED 100 AT PRESENT (APPROXIMATE)

OPERATION ANNUAL COST NOT KNOWN
PERSONNEL MAINTENANCE CREW
LEVEL OF CERTIFICATION NONE
CONDITION OF EQUIPMENT FAIR

OUTFALL TYPE SEEPAGE SIZE — LENGTH —
DISCHARGED TO: DRAINFIELD WATER COURSE MILEAGE: —
LATITUDE — LONGITUDE —

TREATMENT (LIST UNITS IN ORDER, EXCLUDING SLUDGE TREATMENT & DISPOSAL)
PRIMARY SEDIMENTATION, MECHANICALLY AERATED TANKS, SECONDARY SEDIMENTATION, CHLORINE DRIPPED INTO THE EFFLUENT

SLUDGE TREATMENT ANAEROBIC DIGESTION

DISPOSAL SLUDGE DRYING BED

REMARKS AERATION TANKS WERE UNDERLOADED AND DARK IN COLOR

PREPARED BY: KW Schang

LOWER FLORIDA ESTUARY STUDY
DADE COUNTY WASTE SOURCE INVENTORY
TREATMENT PLANT FIELD SHEET

PLANT NAVAL AIR STATION

							AVERAGE
DATE ON		1-12-71					
TIME ON		10:00					
DATE OFF		1-12-71					
TIME OFF		10:45					
FLOW	START	No Flow Meter					
	END	No Weir					
	TOTAL						
	24 hr. Flow Rate						
INF.	TEMP. ON	78° F					
	PH - ON	–					
EFFLUENT	TEMP - ON	78° F					
	PH - ON	–					
	Cl. Residual	0 PPM					
	CHLORINE-ON						
	CHLORINE-OFF						
	ON-OFF-lbs						

DATE	WASTE CHARACTERISTICS	PLANT OPERATION	AUTO. SAMPLER OPERATION	SAMPLES COLLECTED BY
1-12-71	SEPTIC INFLUENT	POOR - LOW SOLIDS, SEPTIC THROUGHOUT	–	SCHANG
		CHLORINE ADDED TO AERATION TANKS		

LOWER FLORIDA ESTUARY STUDY
DADE COUNTY WASTE SOURCE INVENTORY
TREATMENT PLANT – SCHEMATIC DIAGRAM

PLANT NAVAL AIR STATION

DRAW COMPLETE FLOW DIAGRAM OF TREATMENT PLANT AND OUTFALL. LABEL EACH UNIT. SHOW LOCATIONS OF SAMPLE COLLECTION AND FLOW MEASURING DEVICES

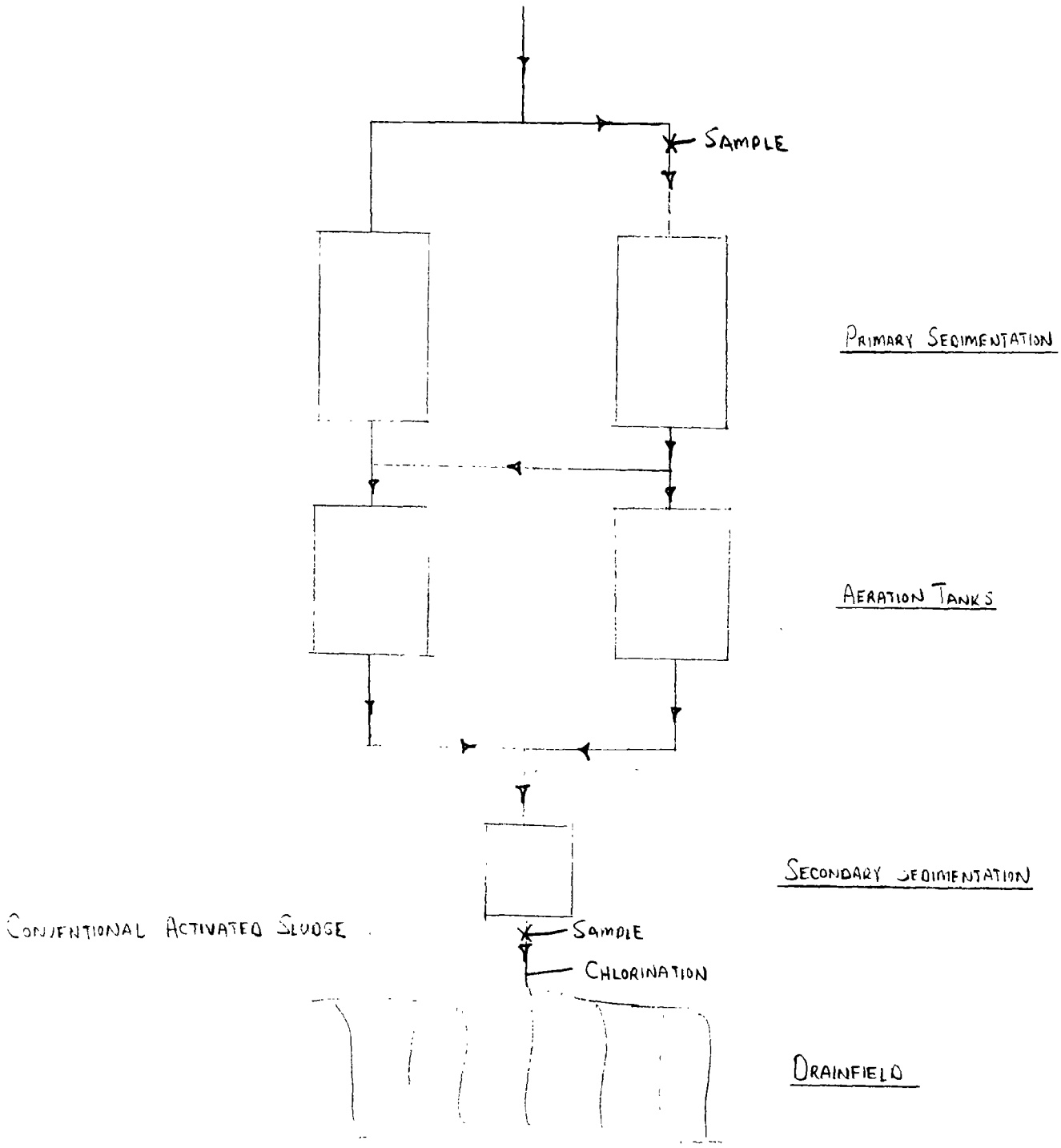

PREPARED BY: KW Schang

Sheet ___ of _____

LOWER FLORIDA ESTUARY STUDY
DADE COUNTY WASTE SOURCE INVENTORY
INFLUENT – EFFLUENT – DATA SUMMARY
PLANT Naval Air Station

								AVERAGE
DATE - OFF		1/12/71	1/					
FLOW - MGD		—						
5 DAY BOD mg/l	INFLUENT	39.5						
	EFFLUENT	27						
	IN - OUT							
	% REMOVAL	31.6						
	LOAD-lbs/day	—						
COD mg/l	INFLUENT	634						
	EFFLUENT	66						
	IN - OUT							
	% REMOVAL	89.4						
	LOAD -lbs/day	—						
TSS mg/l	INFLUENT	[illegible]						
	EFFLUENT	[illegible]						
	IN - OUT							
	% REMOVAL	45.8						
	LOAD- lbs/day	—						
VSS mg/l	INFLUENT	341						
	EFFLUENT	10						
	IN - OUT							
	% REMOVAL	64.7						
	LOAD –lbs/day	—						
Settlable Solids ml/l	INFLUENT	.5						
	EFFLUENT	0.0						
	IN - OUT							
	% REMOVAL	100						
TOC mg/l	INFLUENT	30						
	EFFLUENT	10						
	IN - OUT							
	% REMOVAL	67.6						
	LOAD - lbs/day	—						

INFLUENT BOD POPULATION EQUIVALENT = _____

EFFLUENT BOD POPULATION EQUIVALENT = _____

LOAD = FLOW (MGD) x EFFLUENT (mg/l) x 8.34 = lbs/day

Released
From The Desk Of
Michael V. Polito

LOWER FLORIDA ESTUARY STUDY
DADE COUNTY WASTE SOURCE INVENTORY
EFFLUENT DATA SUMMARY

Sheet____ of_____

PLANT Naval Air Station

							AVERAGE or MEDIAN*
DATE - OFF		1/12					
FLOW - MGD							
KTELDAHL NITROGEN as N	CONC.-mg/l	10.0					
	LOAD-lbs/day	—					
AMMONIA NITROGEN as N	CONC.-mg/l	9.1					
	LOAD-lbs/day	—					
ORGANIC NITROGEN as N	CONC.-mg/l	0.9					
	LOAD-lbs/day	—					
NO_2 - NO_3 as N	CONC.-mg/l	0.01					
	LOAD-lbs/day	—					
TOTAL PHOSPHORUS AS P	CONC.-mg/l	7.1					
	LOAD-lbs/day	—					
CHLORIDE	CONC.-mg/l	318					
TOTAL COLIFORM	CONC - MPN/100ml						
Fecal COLIFORM	CONC - MPN/100ml						

*Calculate Median for Total & Fecal Coliform Concentrations and Average for All Other Parameters.

Lower Florida Estuary Study
Report on Waterborne Wastes from
Palm Springs Garden Condominium Waste Water Treatment Plant
170 Royal Palm Road
Hialeah Gardens, Dade County, Florida
March 19, 1971

INTRODUCTION

The Palm Springs Garden Condominium Waste Water Treatment Plant was surveyed during the period December 6 - 8, 1970. The survey was begun as a major treatment plant effort, but was terminated by mutual agreement of Mr. Robert Evans, Enforcement Officer of Dade County Pollution Control Board, and the authors of this report. The plant is a package treatment system and there appeared to be no reason for an extensive sampling program. Two Sirco electric automatic samplers were utilized to collect two 24-hour composites of influent and effluent (after chlorination). Messrs. Terry Davis and George Egermier were the sample collectors. Primary contact was Mr. Greenberg of Gelvan, Inc.

SUMMARY AND CONCLUSIONS

The average flow during the study period was 0.02 MGD. The average five-day biochemical oxygen demand (BOD) and total suspended solids loads discharged during the study were 6.5 and 12 lbs. per day respectively. The plant did not provide 90% removal of BOD or total suspended solids. The average removal efficiencies for BOD and total suspended

solids were 76.8 and 64.1% respectively. The average removal efficiencies and loads were calculated from the daily data.

The following are recommended to improve waste treatment by this plant:

1. The operating criteria be reevaluated.
2. The plant should be operated by a licensed operator.

INVENTORY

The unit is a Davco contact stabilization plant, manufacturer's model No. 12DAc50C, with extended air feature. In the contact stabilization mode, it is designed for a flow of 0.05 MGD, while in the extended air mode the design flow is 0.025 MGD. During the survey, the plant was being operated in the contact stabilization mode. In this configuration, the tank has the following major components:

1. Contact tank with air diffusers.
2. Secondary clarifier with mechanical sludge collector.
3. Reaeration tank with air diffusers.
4. Two stage aerobic digester with air diffusers.
5. Inlet bar screen.
6. Chlorine contact chamber (with change from liquid to gas chlorination).

In the extended air operation, the aerobic digester tanks and the contact tanks are used as aeration tanks.

RESULTS

The average flow during the study period was 0.02 MGD. The average influent and effluent BOD concentrations were 173 and 41 mg/l (6.5 lbs. per day) respectively. The average total suspended solids concentrations were influent, 212 mg/l, and effluent, 75.5 mg/l (12 lbs. per day). The average BOD and total suspended solids removal efficiencies were 76.8 and 64.1% respectively.

The chlorine residual in the effluent was only measured on December 7, 1970, when it was greater than 10 mg/l. The bacterial concentrations during the study were low.

Most of the nutrients discharged by the plant were in the form of ammonia nitrogen, 15.3 mg/l (2.5 lbs. per day), and total phosphorus, 9.6 mg/l (1.5 lbs. per day).

The daily data are presented in the attached Field and Data Summary Sheets.

DISCUSSION

There is a background of operating problems at this plant, the present owner is making an effort to correct this situation. However, a complete reevaluation of operating procedure is necessary. This plant should be operated by a licensed operator, but at the present time it is not.

LAWRENCE W. OLINGER

ROBERT L. KING

LOWER FLORIDA ESTUARY STUDY
DADE COUNTY WASTE SOURCE INVENTORY
TREATMENT PLANT – GENERAL INFORMATION

Sheet ___ of ___

DATE OF VISIT December 7, 1970
PLANT NAME: Palm Springs Garden Condominium
PLANT OWNER: Gelvan, Inc.
ADDRESS 9990 N.W. 87th Ave., Hialeah Gardens, Florida
TELEPHONE:
COLLECTION SYSTEM – TYPE: Separate
OWNER: Same
ADDRESS:
TELEPHONE

DESIGN AVERAGE DESIGN FLOW: 0.05 MGD YEAR COMPLETED: 1968
STREAM FLOW cfs DURATION days FREQUENCY Yrs
CONSTRUCTION COST $141,000
POPULATION SERVED 450

OPERATION ANNUAL COST $27,000
PERSONNEL 1 operator.
LEVEL OF CERTIFICATION None
CONDITION OF EQUIPMENT Excellent

OUTFALL TYPE SIZE LENGTH
DISCHARGED TO: Little River WATER COURSE MILEAGE:
LATITUDE LONGITUDE

TREATMENT (LIST UNITS IN ORDER, EXCLUDING SLUDGE TREATMENT & DISPOSAL)

Davco Model 12DAc50c Contact Stabilization Unit.

SLUDGE TREATMENT Part of Davco plant.

DISPOSAL Approximately once monthly, excess is hauled to other plants in Hialeah area for seed.

REMARKS

PREPARED BY: Robert L. King

LOWER FLORIDA ESTUARY STUDY
DADE COUNTY WASTE SOURCE INVENTORY
TREATMENT PLANT FIELD SHEET

Sheet ___of_____

PLANT Palm Springs Gardens

							AVERAGE
DATE ON		6 Dec 70	7 Dec 70	8 Dec 70			
TIME ON		0945	1320	1235			
DATE OFF		7 Dec 70	8 Dec 70	9 Dec 70			
TIME OFF		1320	1235				
FLOW	START	12485000	12505200	125273			
	END	12505200	12527300				
	TOTAL	24,200	18,100				
	24 hr. Flow Rate	21,043	18,407				19,725
INF.	TEMP. ON	26.2°C	26.0°C				26.1
	PH - ON	7.42					7.4
EFFLUENT	TEMP - ON	25.0C	24.7°C				24.85
	PH - ON	6.68	6.53				6.6
	Cl. Residual	—	10 0 T				~~NT~~ -
	CHLORINE-ON	—	—				
	CHLORINE-OFF	—	—				
	ON-OFF-lbs	—	—				

DATE	WASTE CHARACTERISTICS	PLANT OPERATION	AUTO. SAMPLER OPERATION	SAMPLES COLLECTED BY
6 Dec 70	Normal	Normal		GAE
7 Dec 70	NORMAL	NORMAL		GAE
8 Dec 70	NORMAL/CLEAR	NORMAL	OK.	GAE

LOWER FLORIDA ESTUARY STUDY
DADE COUNTY WASTE SOURCE INVENTORY
TREATMENT PLANT – SCHEMATIC DIAGRAM

PLANT Palm Springs Gardens (Contact Stabilization Mode)

DRAW COMPLETE FLOW DIAGRAM OF TREATMENT PLANT AND OUTFALL. LABEL EACH UNIT. SHOW LOCATIONS OF SAMPLE COLLECTION AND FLOW MEASURING DEVICES

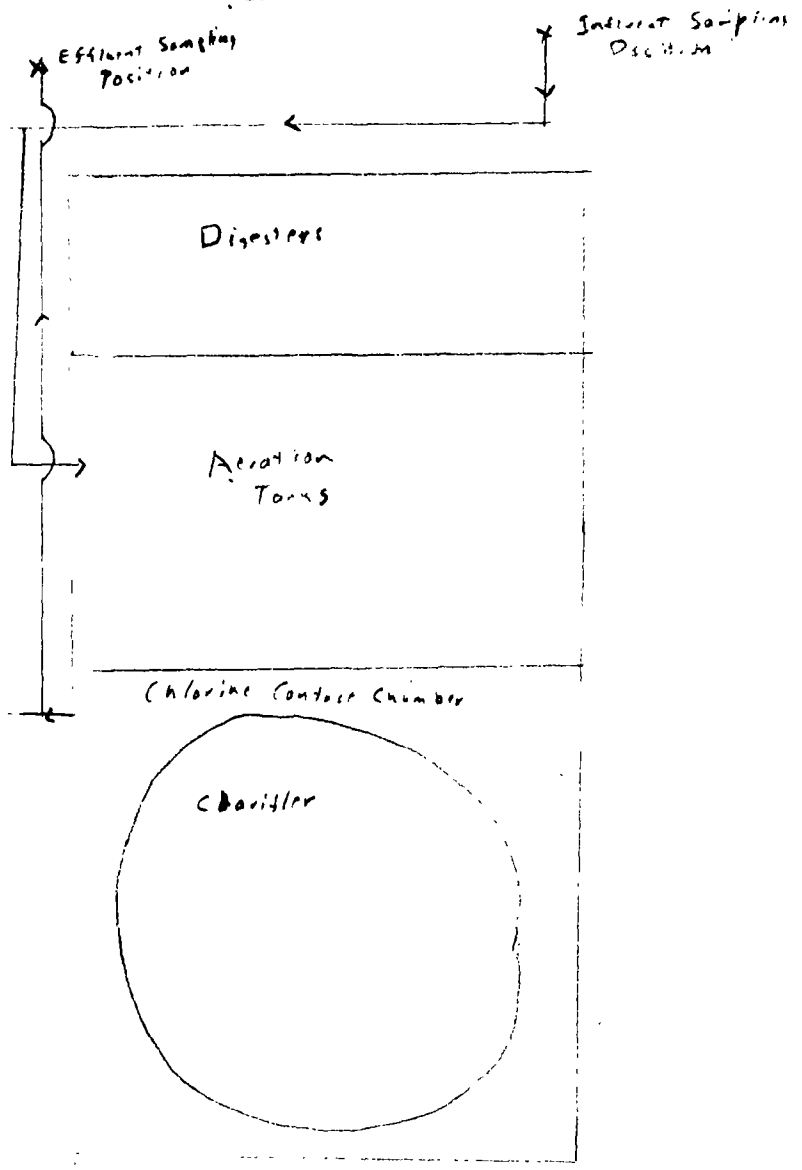

PREPARED BY: Bob King

Sheet ___ of ___

LOWER FLORIDA ESTUARY STUDY
DADE COUNTY WASTE SOURCE INVENTORY
INFLUENT – EFFLUENT – DATA SUMMARY

PLANT *Palm Springs Garden.*

							AVERAGE
DATE - OFF		12/5	12/8	[redacted]			
FLOW - MGD		0.021	0.018				0.020
5 DAY B O D mg/l	INFLUENT	175	171.5				173.3
	EFFLUENT	30.0	50.5				40.6
	IN - OUT	145	121				
	% REMOVAL	82.9	70.6				76.1
	LOAD-lbs/day	5	8				6.5
C O D mg/l	INFLUENT	601	587				594
	EFFLUENT	111	85				99
	IN - OUT	490	502				
	% REMOVAL	81.5	85.5				83.5
	LOAD -lbs/day	19	13				16
T S S mg/l	INFLUENT	216	208				212
	EFFLUENT	46	105				75.5
	IN - OUT	170	103				
	% REMOVAL	78.7	49.5				64.1
	LOAD- lbs/day	8	16				12
V S S mg/l	INFLUENT	136	32				109
	EFFLUENT	132	19				90.5
	IN - OUT	4	13				
	% REMOVAL	2.2	33.3				17.8
	LOAD –lbs/day	32	3				17.5
Settlable Solids ml/l	INFLUENT	3	N.S.				
	EFFLUENT	0	nil.				
	IN - OUT	3					
	% REMOVAL	100%					
T O C mg/l	INFLUENT	73	97.5				85.2
	EFFLUENT	23	19.5				21.3
	IN - OUT	50	78.0				
	% REMOVAL	68.5	80				74.3
	LOAD - lbs/day	4	3				

INFLUENT BOD POPULATION EQUIVALENT = _____

EFFLUENT BOD POPULATION EQUIVALENT = _____

LOAD = FLOW (MGD) x EFFLUENT (mg/l) x 8.34 = lbs/day

From The Desk Of
Michael V. Polito

Sheet____ of_____

LOWER FLORIDA ESTUARY STUDY
DADE COUNTY WASTE SOURCE INVENTORY
EFFLUENT DATA SUMMARY

PLANT Palm Springs Garden

DATE - OFF		12/7	12/8	12/9 ?			AVERAGE or MEDIAN*
FLOW - MGD		0.021	0.018				0.020
KTELDAHL NITROGEN as N	CONC.-mg/l	20.7	14.6				17.7
	LOAD-lbs/day	1	2				3
AMMONIA NITROGEN as N	CONC.-mg/l	16.8	13.8				15.3
	LOAD-lbs/day	3	2				2.5
ORGANIC NITROGEN as N	CONC.-mg/l	3.9	0.8				2.4
	LOAD-lbs/day	1	0				0.5
NO_2 -NO_3 as N	CONC.-mg/l	3.6	1.8				2.7
	LOAD-lbs/day	1	0				0.5
TOTAL PHOSPHORUS AS P	CONC.-mg/l	9.6	9.5				9.6
	LOAD-lbs/day	2	1				1.5
CHLORIDE	CONC.-mg/l	72.6	81.9				77.2
TOTAL COLIFORM	CONC - MPN/100ml	<18	<18				<18
Fecal COLIFORM	CONC - MPN/100ml	<18	<18				<18

*Calculate Median for Total & Fecal Coliform Concentrations and Average for All Other Parameters.

Lower Florida Estuary Study
Report on Waterborne Wastes from
Palm Springs General Hospital Sewage Treatment Plant
1479 W. 49th Street
Hialeah, Dade County, Florida
March 19, 1971

INTRODUCTION

The Palm Springs General Hospital Sewage Treatment Plant was inspected and sampled on January 5, 1971 by Kenneth Schang. Grab samples of the influent and effluent after chlorination were obtained. The treatment plant utilizes the extended aeration process with chlorination prior to discharge to the Little River Canal.

SUMMARY AND CONCLUSIONS

The treatment plant effected 80.9% removal of BOD for an effluent concentration of 29 mg/l.

Total suspended solids removal efficiency equalled 89.6% with an effluent concentration of 21 mg/l.

A chlorine residual of >10 ppm was measured in the effluent immediately prior to discharge.

INVENTORY

1. Aeration tanks; diffused air system.
2. Secondary sedimentation.
3. Chlorine contact.
4. Aerobic digester, diffused air system.

DISCUSSION

BOD, COD and TOC removal efficiencies equalled 80.9, 80.9 and 39.3% respectively with corresponding effluent concentrations of 29, 137 and 44 mg/l. The discharge loadings were calculated as: BOD, 3.39; COD, 16; and TOC, 5.13 lbs. per day based on the measured flow of 0.014 MGD.

Total suspended solids removal efficiency equalled 89.6% based on an effluent concentration of 21 mg/l and this produced a loading of 2.45 lbs. per day. The influent settleable solids level of 3 ml/l was reduced 96.7% to 0.1 ml/l in the effluent.

Nutrient concentrations and loadings were as follows: organic nitrogen: 11.6 mg/l and 1.34 lbs. per day; nitrate-nitrite as N: 0.2 mg/l and .023 lbs. per day; total phosphorus: 9.8 mg/l and 1.14 lbs. per day.

RECOMMENDATIONS

The physical appearance of the treatment plant was not good; more adequate maintenance is necessary.

The visual inspection yielded no recommendations with regard to plant operation.

Mr. William Case, plant operator, is licensed class "A".

Kenneth Schang

LOWER FLORIDA ESTUARY STUDY
DADE COUNTY WASTE SOURCE INVENTORY
TREATMENT PLANT – GENERAL INFORMATION

DATE OF VISIT 1-5-71
PLANT NAME: PALM SPRINGS GENERAL HOSPITAL
PLANT OWNER: PALM SPRINGS GENERAL HOSPITAL
ADDRESS 1479 W. 49 STREET
TELEPHONE 821-2510
COLLECTION SYSTEM – TYPE: SERVES HOSPITAL
OWNER: PALM SPRINGS GENERAL HOSPITAL
ADDRESS: 1479 W. 49 STREET
TELEPHONE 821-2510

DESIGN AVERAGE DESIGN FLOW: .050 MGD YEAR COMPLETED: 1965
STREAM FLOW — cfs DURATION — days FREQUENCY — Yrs
CONSTRUCTION COST NOT KNOWN
POPULATION SERVED 259 BEDS

OPERATION ANNUAL COST NOT KNOWN
PERSONNEL WILLIAM [illegible] - OPERATOR
LEVEL OF CERTIFICATION CLASS 'A'
CONDITION OF EQUIPMENT FAIR

OUTFALL TYPE GRAVITY SIZE 10 INCHES LENGTH 50 FEET
DISCHARGED TO: LITTLE RIVER S-7 WATER COURSE MILEAGE: –
LATITUDE – LONGITUDE –

TREATMENT (LIST UNITS IN ORDER, EXCLUDING SLUDGE TREATMENT & DISPOSAL)
AERATION TANKS, SECONDARY SEDIMENTATION, CHLORINE CONTACT, CANAL

EXTENDED AERATION

SLUDGE TREATMENT AEROBIC DIGESTER

DISPOSAL TRUCK TO LANDFILL

REMARKS

PREPARED BY: K W Schang

Sheet 2 of 3

LOWER FLORIDA ESTUARY STUDY
DADE COUNTY WASTE SOURCE INVENTORY
TREATMENT PLANT FIELD SHEET

PLANT PALM SPRINGS GENERAL HOSPITAL

							AVERAGE
DATE ON		1-6-70					
TIME ON		11:15					
DATE OFF		1-5-70					
TIME OFF		12:00					
FLOW	START	2½ INCHES 15°	V-NOTCH WEIR				
	END	.014 MGD					
	TOTAL						
	24 hr. Flow Rate						
INF.	TEMP. ON	80° F					
	PH - ON	-					
EFFLUENT	TEMP - ON	80° F					
	PH - ON	-					
	Cl. Residual	10 + PPM					
	CHLORINE-ON						
	CHLORINE-OFF						
	ON-OFF-lbs						

DATE	WASTE CHARACTERISTICS	PLANT OPERATION	AUTO. SAMPLER OPERATION	SAMPLES COLLECTED BY
[illegible]	[illegible]	FAIR - [illegible] CLARIFIER	–	SCHANG

LOWER FLORIDA ESTUARY STUDY
DADE COUNTY WASTE SOURCE INVENTORY
TREATMENT PLANT – SCHEMATIC DIAGRAM

PLANT PALM SPRINGS GENERAL HOSPITAL

DRAW COMPLETE FLOW DIAGRAM OF TREATMENT PLANT AND OUTFALL. LABEL EACH UNIT. SHOW LOCATIONS OF SAMPLE COLLECTION AND FLOW MEASURING DEVICES

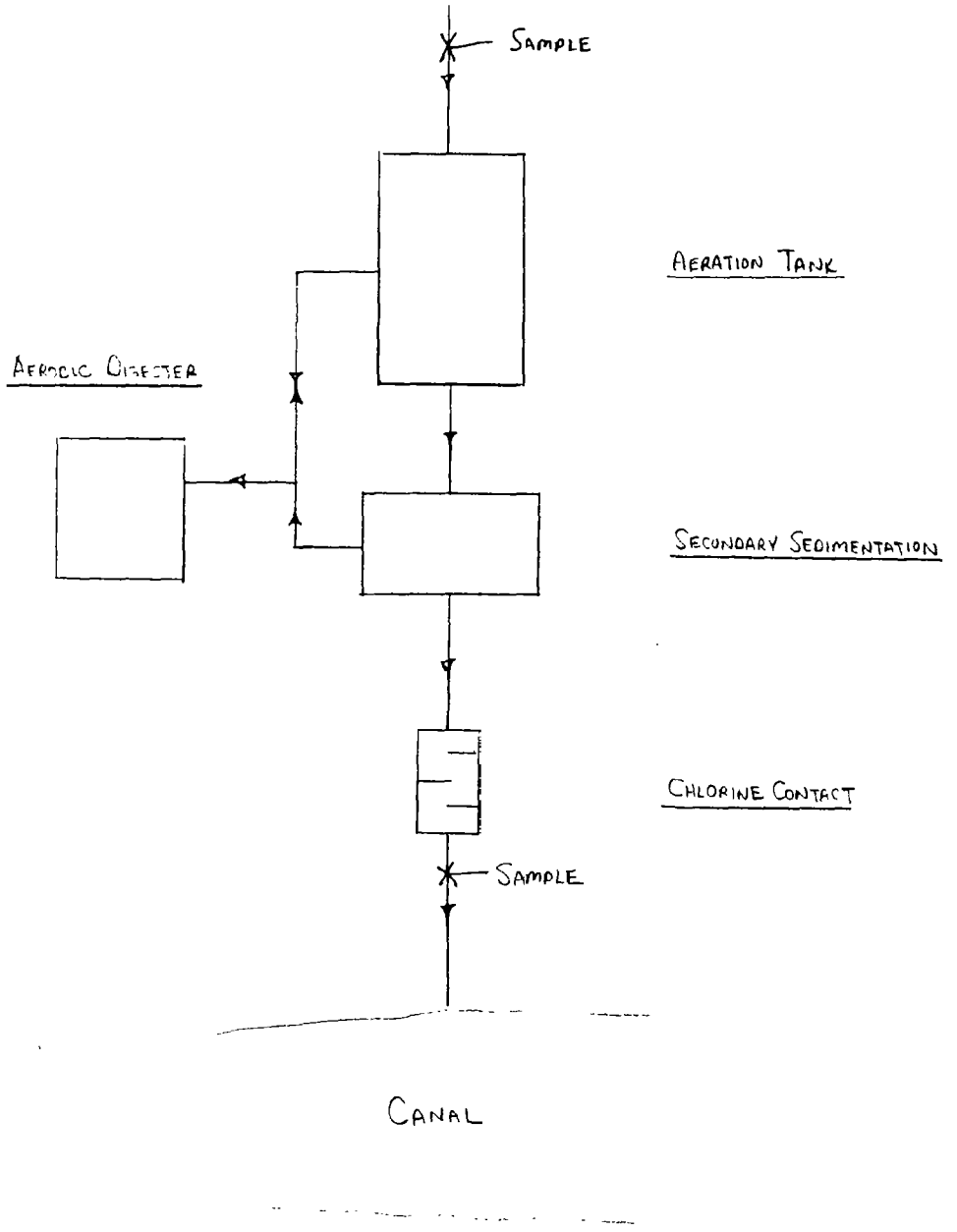

PREPARED BY: KW Schang

LOWER FLORIDA ESTUARY STUDY
DADE COUNTY WASTE SOURCE INVENTORY
INFLUENT – EFFLUENT – DATA SUMMARY

Sheet ___ of _____

PLANT Palm Springs Hospital

							AVERAGE
DATE - OFF		1-5-71					
FLOW - MGD		0.014					
5 DAY B O D mg/l	INFLUENT	152					
	EFFLUENT	29					
	IN - OUT						
	% REMOVAL	80.9					
	LOAD-lbs/day	3.39					
C O D mg/l	INFLUENT	718					
	EFFLUENT	137					
	IN - OUT	581					
	% REMOVAL	80.9					
	LOAD -lbs/day	16					
T S S mg/l	INFLUENT	202					
	EFFLUENT	21					
	IN - OUT	181					
	% REMOVAL	89.6					
	LOAD- lbs/day	3.45					
V S S mg/l	INFLUENT	192					
	EFFLUENT	17					
	IN - OUT	175					
	% REMOVAL	91.1					
	LOAD --lbs/day	1.33					
Settlable Solids ml/l	INFLUENT	3					
	EFFLUENT	0.1					
	IN - OUT	2.9					
	% REMOVAL	96.7					
T O C mg/l	INFLUENT	72					
	EFFLUENT	44					
	IN - OUT	28.5					
	% REMOVAL	39.3					
	LOAD - lbs/day	5.13					

INFLUENT BOD POPULATION EQUIVALENT = 124 17.75

FFLUENT BOD POPULATION EQUIVALENT = 20 2.39

LOAD = FLOW (MGD) x EFFLUENT (mg/l) x 8.34 = lbs/day

Released

MMJ

From The Desk Of
Michael V. Polito

LOWER FLORIDA ESTUARY STUDY
DADE COUNTY WASTE SOURCE INVENTORY
EFFLUENT DATA SUMMARY

Sheet____ of_____

PLANT Palm Springs Hospital

							AVERAGE or MEDIAN*
DATE - OFF		1-5-71					
FLOW - MGD		0.012					
KTELDAHL NITROGEN as N	CONC.-mg/l	18.1					
	LOAD-lbs/day	2.11					
AMMONIA NITROGEN as N	CONC.-mg/l	6.6					
	LOAD-lbs/day	.77					
ORGANIC NITROGEN as N	CONC.-mg/l	11.5					
	LOAD-lbs/day	1.34					
NO_2 -NO_3 as N	CONC.-mg/l	0.2					
	LOAD-lbs/day	.023					
TOTAL PHOSPHORUS AS P	CONC.-mg/l	9.8					
	LOAD-lbs/day	1.14					
CHLORIDE	CONC.-mg/l	120					
TOTAL COLIFORM	CONC - MPN/100ml						
Fecal COLIFORM	CONC - MPN/100ml						

*Calculate Median for Total & Fecal Coliform Concentrations and Average for All Other Parameters.

Lower Florida Estuary Study
Report on Waterborne Wastes from
Queen's Inn Hotel Sewage Treatment Plant
5335 N.W. 36th Street
Miami Springs, Dade County, Florida
March 19, 1971

INTRODUCTION

The Queen's Inn Hotel Sewage Treatment Plant was inspected and sampled on January 13, 1971 by Kenneth Schang. Grab samples of the influent and effluent prior to chlorination were obtained. The treatment plant utilizes the extended aeration process with tertiary filtration and chlorination prior to discharge to a drainfield.

SUMMARY AND CONCLUSIONS

An influent BOD of 73 mg/l was reduced 86.3% to 10 mg/l.

The total suspended solids removal efficiency equalled 80.4%, producing an effluent concentration of 20 mg/l.

A chlorine residual of 0.5 ppm was measured in the dosing tank immediately prior to discharge.

INVENTORY

1. Aeration tank; diffused air system.
2. Secondary sedimentation.
3. Tertiary filters.
4. Chlorination.
5. Aerobic digester; diffused air system.

RESULTS

(Low flow and the lack of a flow measuring device did not allow the loads to be calculated).

Removal efficiencies for BOD, COD and TOC were 86.3, 71.8 and 62.2% respectively with corresponding effluent concentrations of 10, 69 and 14 mg/l.

The influent settleable solids value of 0.5 ml/l was reduced to zero ml/l in the effluent. The total suspended solids removal efficiency equalled 80.4% producing an effluent concentration of 20 mg/l.

Nutrient effluent concentrations were as follows: ammonia nitrogen: 18.4 mg/l; nitrate-nitrite as N: 0.1 mg/l; total phosphorus: 5.8 mg/l.

DISCUSSION

The solids levels in the aeration tank appeared to be low due to the newness of the treatment plant. This condition may have prevented the system from effecting the removal efficiencies to be expected from a tertiary plant. The recommendation is to reevaluate this facility at some later time.

The treatment plant is not operated by a certified operator.

Kenneth Schang

Sheet 1 of 3

LOWER FLORIDA ESTUARY STUDY
DADE COUNTY WASTE SOURCE INVENTORY
TREATMENT PLANT – GENERAL INFORMATION

DATE OF VISIT 1-13-71
PLANT NAME: QUEENS INN HOTEL
PLANT OWNER: QUEENS INN HOTEL
ADDRESS 5335 N.W. 36 STREET
TELEPHONE 885-1911
COLLECTION SYSTEM – TYPE: SERVES HOTEL
OWNER: QUEENS INN HOTEL
ADDRESS: 5335 N.W. 36 STREET
TELEPHONE 885-1911

DESIGN AVERAGE DESIGN FLOW: .016 MGD YEAR COMPLETED: 1970
STREAM FLOW NA cfs | DURATION NA days FREQUENCY NA Yrs
CONSTRUCTION COST $18,000
POPULATION SERVED 320 PERSONS

OPERATION ANNUAL COST NOT DETERMINABLE
PERSONNEL UNAVAILABLE
LEVEL OF CERTIFICATION NONE
CONDITION OF EQUIPMENT NEW PLANT

OUTFALL TYPE – SIZE – LENGTH –
DISCHARGED TO: DRAINFIELD WATER COURSE MILEAGE: –
LATITUDE – LONGITUDE –

TREATMENT (LIST UNITS IN ORDER, EXCLUDING SLUDGE TREATMENT & DISPOSAL)
AERATION TANK, SECONDARY SEDIMENTATION, CHLORINE CONTACT, DRAINFIELD

SLUDGE TREATMENT SLUDGE HOLDING TANK

DISPOSAL TRUCKED AWAY

REMARKS LOW SOLIDS DUE TO NEWNESS OF PLANT

PREPARED BY: KW Schang

LOWER FLORIDA ESTUARY STUDY
DADE COUNTY WASTE SOURCE INVENTORY
TREATMENT PLANT FIELD SHEET

PLANT QUEENS INN HOTEL

							AVERAGE
DATE ON		1-13-71					
TIME ON		3:45					
DATE OFF		1-13-71					
TIME OFF		4:15					
FLOW	START	NO FLOW METER					
	END	NO WEIR					
	TOTAL						
	24 hr. Flow Rate						
INF.	TEMP. ON	80° F					
	PH - ON	–					
EFFLUENT	TEMP - ON	78° F					
	PH - ON	–					
	Cl. Residual	.5 PPM					
	CHLORINE-ON						
	CHLORINE-OFF						
	ON-OFF-lbs						

DATE	WASTE CHARACTERISTICS	PLANT OPERATION	AUTO. SAMPLER OPERATION	SAMPLES COLLECTED BY
1-13-71	EFFLUENT - TURBID, BROWN	OK - LOW SOLIDS IN AERATION TANK, NEW PLANT	–	SCHANG

LOWER FLORIDA ESTUARY STUDY
DADE COUNTY WASTE SOURCE INVENTORY
TREATMENT PLANT – SCHEMATIC DIAGRAM

PLANT Queen's Inn

DRAW COMPLETE FLOW DIAGRAM OF TREATMENT PLANT AND OUTFALL. LABEL EACH UNIT. SHOW LOCATIONS OF SAMPLE COLLECTION AND FLOW MEASURING DEVICES

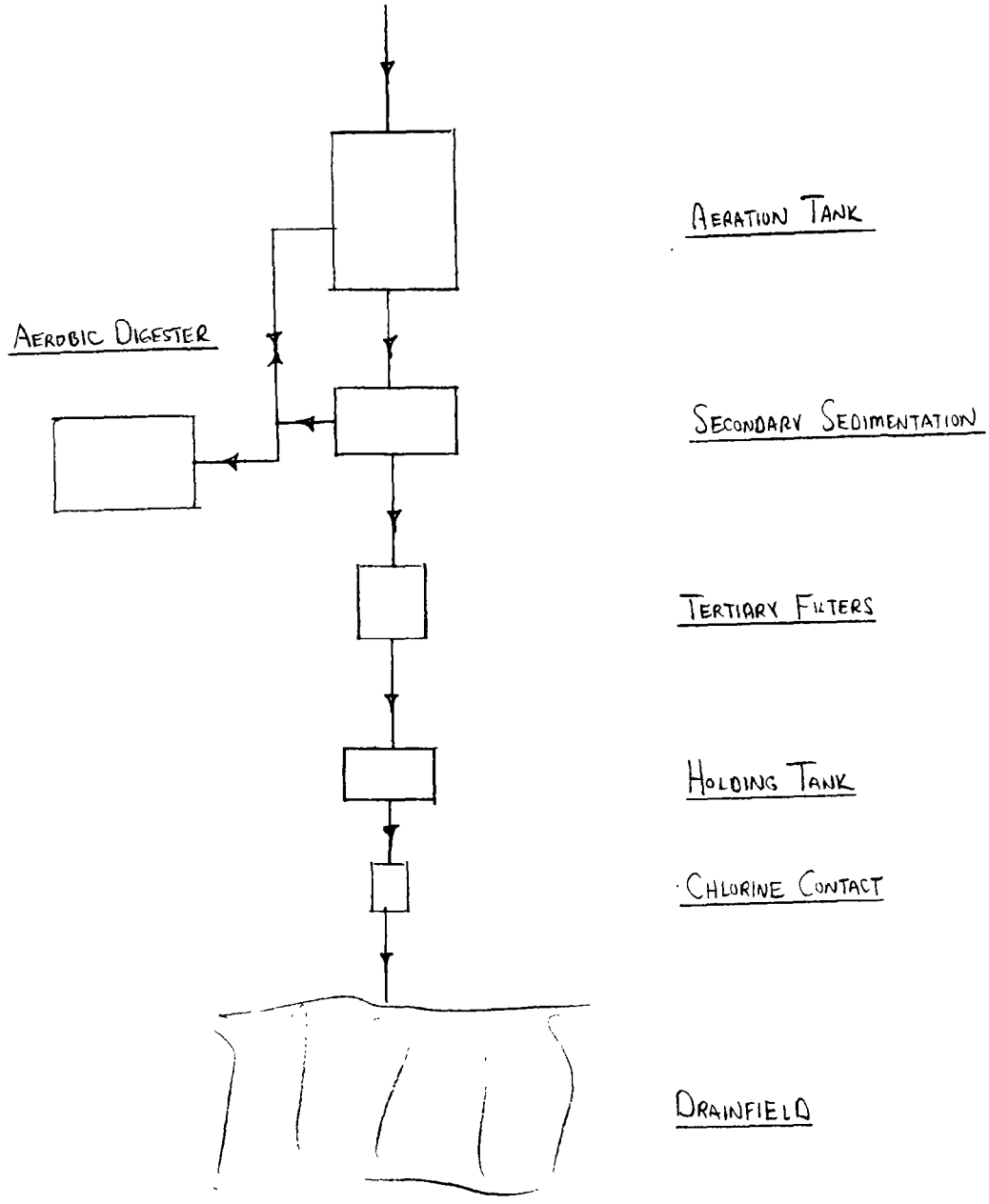

PREPARED BY: KVJ Schang

Sheet ___ of ___

LOWER FLORIDA ESTUARY STUDY

DADE COUNTY WASTE SOURCE INVENTORY

INFLUENT – EFFLUENT – DATA SUMMARY

PLANT Queens Inn Hotel

								AVERAGE
DATE - OFF		1/13/71						
FLOW - MGD		—						
5 DAY B O D mg/l	INFLUENT	73						
	EFFLUENT	10						
	IN - OUT							
	% REMOVAL	86.3 %						
	LOAD-lbs/day	—						
C O D mg/l	INFLUENT	245						
	EFFLUENT	69						
	IN - OUT							
	% REMOVAL	71.8 %						
	LOAD -lbs/day	—						
T S S mg/l	INFLUENT	102						
	EFFLUENT	20						
	IN - OUT							
	% REMOVAL	80.4 %						
	LOAD- lbs/day	—						
V S S mg/l	INFLUENT	52						
	EFFLUENT	12						
	IN - OUT							
	% REMOVAL	76.9 %						
	LOAD –lbs/day	—						
Settlable Solids ml/l	INFLUENT	.5						
	EFFLUENT	0.0						
	IN - OUT							
	% REMOVAL	100 %						
T O C mg/l	INFLUENT	37						
	EFFLUENT	14						
	IN - OUT							
	% REMOVAL	62.2 %						
	LOAD - lbs/day	—						

NFLUENT BOD POPULATION EQUIVALENT = _____

:FFLUENT BOD POPULATION EQUIVALENT = _____

LOAD = FLOW (MGD) x EFFLUENT (mg/l) x 8.34 = lbs/day

Released

From The Desk Of
Michael V. Polito

MP

Sheet____ of_____

LOWER FLORIDA ESTUARY STUDY
DADE COUNTY WASTE SOURCE INVENTORY
EFFLUENT DATA SUMMARY

PLANT Queens Inn Hotel

							AVERAGE or MEDIAN*
DATE - OFF							
FLOW - MGD							
KTELDAHL NITROGEN as N	CONC.-mg/l	26.2					
	LOAD-lbs/day	—					
AMMONIA NITROGEN as N	CONC.-mg/l	18.4					
	LOAD-lbs/day	—					
ORGANIC NITROGEN as N	CONC.-mg/l	7.8					
	LOAD-lbs/day	—					
NO_2 -NO_3 as N	CONC.-mg/l	0.1					
	LOAD-lbs/day	—					
TOTAL PHOSPHORUS AS P	CONC.-mg/l	5.8					
	LOAD-lbs/day	—					
CHLORIDE	CONC.-mg/l	61					
TOTAL COLIFORM	CONC - MPN/100ml						
Fecal COLIFORM	CONC - MPN/100ml						

*Calculate Median for Total & Fecal Coliform Concentrations and Average for All Other Parameters.

Lower Florida Estuary Study
Report on Waterborne Wastes from
Redlands Mobile Home Park Sewage Treatment Plant
17350 Silver Palm Drive
Redlands, Dade County, Florida
March 19, 1971

INTRODUCTION

The Redlands Mobile Home Park Sewage Treatment Plant was inspected and sampled on December 9, 1970 by Kenneth Schang and Joe Hopson (Dade County Pollution Control Inspector). Grab samples of the influent and effluent after chlorination were obtained. The treatment plant utilizes the complete mix process with chlorination prior to discharge to a drainfield. The inspection was conducted in conjunction with Mr. B. Cohen, manager of the mobile home park.

SUMMARY AND CONCLUSIONS

Removal efficiencies were above Dade County standards.

BOD removal equalled 95.2% with an effluent concentration of 17.4 mg/l.

Settleable solids were 100% removed based on an influent level of 6 ml/l. Total suspended solids efficiencies were 93.7% producing an effluent concentration of 21 mg/l.

A chlorine residual of 10 ppm was measured in the dosing tank prior to discharge.

INVENTORY

1. Comminutor.
2. Aeration tanks, diffused air system.
3. Secondary sedimentation.
4. Dosing tank plus chlorination.
5. Aerobic digester; diffused air system.

RESULTS

Removal of BOD, COD and TOC was 95.2, 91 and 74.1% respectively. The corresponding estimated loadings were 2.18, 7.63 and 3 lbs. per day based on an average design flow of 0.015 MGD.

Efficiency of treatment with regard to solids was excellent. The influent total suspended solids level of 332 mg/l was reduced 93.7% to 21 mg/l. An estimated discharge of 2.63 lbs. per day was produced. Settleable solids were reduced to zero ml/l in the effluent.

Estimated nutrient loadings were calculated as follows: ammonia nitrogen: 1.70 lbs. per day, nitrate-nitrite as N:0.025 lbs. per day, and total phosphorus: 1.05 lbs. per day.

DISCUSSION

From the visual inspection and chemical analysis the plant can be considered as operating very well. No recommendations are in order.

At the time of inspection, Mr. Jack Coles was being considered as plant operator; Mr. Coles is licensed class "C".

The overall plant appearance was good.

Kenneth Schang

LOWER FLORIDA ESTUARY STUDY
DADE COUNTY WASTE SOURCE INVENTORY
TREATMENT PLANT – GENERAL INFORMATION

DATE OF VISIT 12-9-70
PLANT NAME: REDLANDS MOBILE HOME PARK
PLANT OWNER: REDLANDS MOBILE HOME PARK
ADDRESS 17350 SILVER PALM DRIVE
TELEPHONE –
COLLECTION SYSTEM – TYPE: SERVES MOBILE HOME SITES
OWNER: REDLANDS MOBILE HOME PARK
ADDRESS: 17350 SILVER PALM DRIVE
TELEPHONE –

DESIGN AVERAGE DESIGN FLOW: .015 MGD YEAR COMPLETED: 1968
STREAM FLOW NA cfs DURATION NA days FREQUENCY NA Yrs
CONSTRUCTION COST NOT KNOWN
POPULATION SERVED 30 MOBILE HOME SITES

OPERATION ANNUAL COST NOT KNOWN
PERSONNEL MR BERNIE COHEN - MAINTENANCE JACK COLES - OPERATOR
LEVEL OF CERTIFICATION CLASS "C" OPERATOR
CONDITION OF EQUIPMENT GOOD

OUTFALL TYPE NOT APPLICABLE SIZE NOT APPLICABLE LENGTH NOT APPLICABLE
DISCHARGED TO: DRAINFIELD WATER COURSE MILEAGE: NOT APPLICABLE
LATITUDE LONGITUDE –

TREATMENT (LIST UNITS IN ORDER, EXCLUDING SLUDGE TREATMENT & DISPOSAL)

COMMINUTOR, AERATION TANKS, SECONDARY SEDIMENTATION DOSING TANK + CHLORINATION, DRAINFIELD.

COMPLETE MIX

SLUDGE TREATMENT AEROBIC DIGESTION

DISPOSAL TRUCKED AWAY

REMARKS

PREPARED BY: KW Schang

LOWER FLORIDA ESTUARY STUDY
DADE COUNTY WASTE SOURCE INVENTORY
TREATMENT PLANT FIELD SHEET

PLANT REDLANDS MOBILE HOME PARK

							AVERAGE
DATE ON		12-9-70					
TIME ON		1:00					
DATE OFF		12 9-70					
TIME OFF		1:40					
FLOW	START	No Flow					
	END	METER					
	TOTAL						
	24 hr. Flow Rate						
INF.	TEMP. ON	27°C	SAMPLED AT	1:30			
	PH - ON	-					
EFFLUENT	TEMP - ON	27°C	SAMPLED AT	1:35			
	PH - ON	-					
	Cl. Residual	10 PPM					
	CHLORINE-ON						
	CHLORINE-OFF						
	ON-OFF-lbs						

DATE	WASTE CHARACTERISTICS	PLANT OPERATION	AUTO. SAMPLER OPERATION	SAMPLES COLLECTED BY
12-9-70		CLEAR EFFLUENT	-	SCHANG

LOWER FLORIDA ESTUARY STUDY
DADE COUNTY WASTE SOURCE INVENTORY
TREATMENT PLANT – SCHEMATIC DIAGRAM

PLANT REDLAND'S MOBILE HOME PARK

DRAW COMPLETE FLOW DIAGRAM OF TREATMENT PLANT AND OUTFALL. LABEL EACH UNIT. SHOW LOCATIONS OF SAMPLE COLLECTION AND FLOW MEASURING DEVICES

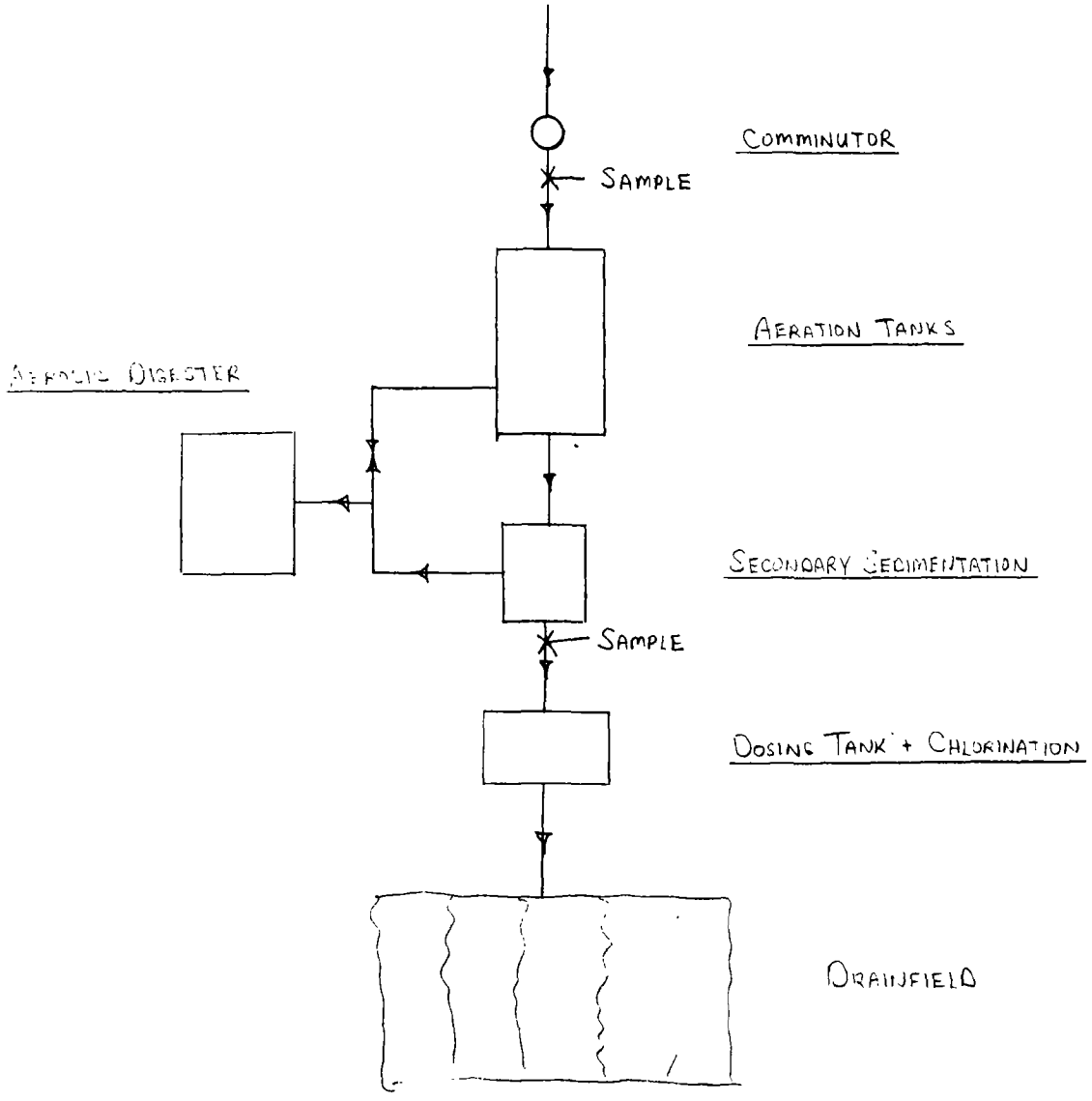

PREPARED BY: KW Schang

Sheet ___ of _____

LOWER FLORIDA ESTUARY STUDY
DADE COUNTY WASTE SOURCE INVENTORY
INFLUENT – EFFLUENT – DATA SUMMARY

PLANT Redlands

								AVERAGE
DATE - OFF		12/4/79						
FLOW - MGD		.015						
5 DAY B O D mg/l	INFLUENT	365						
	EFFLUENT	17.4						
	IN - OUT							
	% REMOVAL	95.2						
	LOAD-lbs/day	2.18						
C O D mg/l	INFLUENT	680						
	EFFLUENT	61						
	IN - OUT							
	% REMOVAL	[illegible]						
	LOAD -lbs/day	7.63						
T S S mg/l	INFLUENT	332						
	EFFLUENT	21						
	IN - OUT							
	% REMOVAL	93.7						
	LOAD- lbs/day	2.63						
V S S mg/l	INFLUENT	26						
	EFFLUENT	14						
	IN - OUT							
	% REMOVAL	[illegible]						
	LOAD –lbs/day	1.75						
Settlable Solids ml/l	INFLUENT	6						
	EFFLUENT	.1						
	IN - OUT							
	% REMOVAL	100						
T O C mg/l	INFLUENT	92.5						
	EFFLUENT	24						
	IN - OUT							
	% REMOVAL	[illegible]						
	LOAD - lbs/day	3						

INFLUENT BOD POPULATION EQUIVALENT = 273

EFFLUENT BOD POPULATION EQUIVALENT = 13

LOAD = FLOW (MGD) x EFFLUENT (mg/l) x 8.34 = lbs/day

From The Desk Of Michael V. Polito

Sheet____ of_____

LOWER FLORIDA ESTUARY STUDY
DADE COUNTY WASTE SOURCE INVENTORY
EFFLUENT DATA SUMMARY

PLANT Redlands

							AVERAGE or MEDIAN*
DATE - OFF		12/~~10~~9					
FLOW - MGD		.015					
KTELDAHL NITROGEN as N	CONC.-mg/l	14.8					
	LOAD-lbs/day	1.85					
AMMONIA NITROGEN as N	CONC.-mg/l	13.6					
	LOAD-lbs/day	1.7					
ORGANIC NITROGEN as N	CONC.-mg/l	1.2					
	LOAD-lbs/day	.15					
NO_2 -NO_3 as N	CONC.-mg/l	0.2					
	LOAD-lbs/day	.025					
TOTAL PHOSPHORUS A S P	CONC.-mg/l	8.4					
	LOAD-lbs/day	1.05					
CHLORIDE	CONC.-mg/l	26					
TOTAL COLIFORM	CONC - MPN/100ml						
Fecal COLIFORM	CONC - MPN/100ml						

*Calculate Median for Total & Fecal Coliform Concentrations and Average for All Other Parameters.

Lower Florida Estuary Study
Report on Waterborne Wastes from
Saratoga Springs Apartments Sewage Treatment Plant
400 N. Royal Poinciana Boulevard
Miami Springs, Dade County, Florida
March 18, 1971

INTRODUCTION

The Sararoga Springs Apartments Sewage Treatment Plant was inspected and sampled on January 7, 1971 by Kenneth Schang. Samples of the influent and effluent were obtained. The treatment plant consists of a Seco Extended Aeration package unit with chlorination prior to discharge to a drainfield. The inspection was conducted in conjunction with Mr. James Montague, apartment manager.

SUMMARY AND CONCLUSIONS

BOD removal equalled 52.2% with 76 mg/l present in the effluent.

The settleable solids removal efficiency equalled 90% with 0.5 ml/l in the effluent.

INVENTORY

1. Aeration tank; diffused air system.
2. Secondary sedimentation.
3. Chlorination.
4. Aerobic digester; diffused air system.

RESULTS

Removal of BOD, COD and TOC was calculated at 52.2, 83.4, and 69% with estimated discharge loadings of 8.24, 16.69 and 4.88 lbs. per day based on the average design flow of 0.013. MGD.

The influent settleable solids level of 5 ml/l was reduced 90% to 0.5 ml/l. Efficiency with respect to total suspended solids removal equalled 88.7% producing an estimated stream loading of 9.54 lbs. per day.

Nutrient concentrations were: ammonia nitrogen: 2.8 mg/l, organic nitrogen: 7.7 mg/l, nitrate-nitrite as N: 12.4 mg/l and total phosphorus 6.9 mg/l. The corresponding loadings are 0.3, 0.83, 1.34 and 0.75 lbs. per day respectively.

DISCUSSION

1. Overall discussion with the manager yielded information that chlorine was added in the first aeration tank.

2. Solids levels appeared critically low in the aeration tank; color was not good.

3. Plant operation is conducted by Mr. James Montague, apartment manager.

Mr. Montague is not certified as a treatment plant operator.

The recommendation is that a licensed operator be contracted until such time as Mr. Montague can obtain certification.

Kenneth Schang

LOWER FLORIDA ESTUARY STUDY
DADE COUNTY WASTE SOURCE INVENTORY
TREATMENT PLANT – GENERAL INFORMATION

DATE OF VISIT 1-7-71
PLANT NAME: SARATOGA SPRINGS APARTMENTS
PLANT OWNER: SARATOGA SPRINGS APARTMENTS
ADDRESS 400 N. POINCIANA BOULEVARD
TELEPHONE 888-8516
COLLECTION SYSTEM – TYPE: SERVES APARTMENT COMPLEX
OWNER: SARATOGA SPRINGS APARTMENTS
ADDRESS: 400 N POINCIANA BOULEVARD
TELEPHONE 888-8516

DESIGN AVERAGE DESIGN FLOW: .013 MGD YEAR COMPLETED: 1964
STREAM FLOW – cfs DURATION – days FREQUENCY – Yrs
CONSTRUCTION COST NOT KNOWN
POPULATION SERVED 69 UNITS ≈50 PEOPLE

OPERATION ANNUAL COST $500 PER YEAR
PERSONNEL JAMES MONTAGUE - MANAGER
LEVEL OF CERTIFICATION NONE
CONDITION OF EQUIPMENT FAIR
OUTFALL TYPE GRAVITY SIZE – LENGTH –
DISCHARGED TO: DRAINFIELD WATER COURSE MILEAGE: NOT APPLICABLE
LATITUDE – LONGITUDE –
TREATMENT (LIST UNITS IN ORDER, EXCLUDING SLUDGE TREATMENT & DISPOSAL)
AERATION TANK, SECONDARY SEDIMENTATION, CHLORINATION, DRAINFIELD

SECO EXTENDED AERATION

SLUDGE TREATMENT AEROBIC HOLDING TANK

DISPOSAL TRUCKED AWAY

REMARKS CHLORINE WAS BEING PLACED INTO FIRST AERATION TANK.

PREPARED BY: KW Schang

LOWER FLORIDA ESTUARY STUDY
DADE COUNTY WASTE SOURCE INVENTORY
TREATMENT PLANT FIELD SHEET

PLANT SARATOGA SPRINGS APARTMENTS

							AVERAGE
DATE ON		1-7-71					
TIME ON		2:30					
DATE OFF		1-7-71					
TIME OFF		3:15					
FLOW	START	NO WEIR					
	END	NO FLOW					
	TOTAL	METER					
	24 hr. Flow Rate						
INF.	TEMP. ON	80° F					
	PH - ON	-					
EFFLUENT	TEMP - ON	80° F					
	PH - ON	-					
	Cl. Residual	.1 PPM					
	CHLORINE-ON						
	CHLORINE-OFF						
	ON-OFF-lbs						

DATE	WASTE CHARACTERISTICS	PLANT OPERATION	AUTO. SAMPLER OPERATION	SAMPLES COLLECTED BY
1-6-70	NOTE: MANAGER HAD BEEN	POOR - NO CERTIFICATION	—	SCHANG
	PUTTING CHLORINE INTO	NO UNDERSTANDING		
	THE AERATION TANK THAT	OF PROPER OPERATING		
	RECEIVES THE INFLUENT.	PROCEDURE		
	Cl_2 - .1 PPM IN EFFLUENT			
	NO SEED CAN BE MADE			
	AVAILABLE BECAUSE OF Cl_2.			
	(USE RAW AS SEED?)			

LOWER FLORIDA ESTUARY STUDY
DADE COUNTY WASTE SOURCE INVENTORY
TREATMENT PLANT – SCHEMATIC DIAGRAM

PLANT SARATOGA SPRINGS APARTMENTS

DRAW COMPLETE FLOW DIAGRAM OF TREATMENT PLANT AND OUTFALL. LABEL EACH UNIT. SHOW LOCATIONS OF SAMPLE COLLECTION AND FLOW MEASURING DEVICES

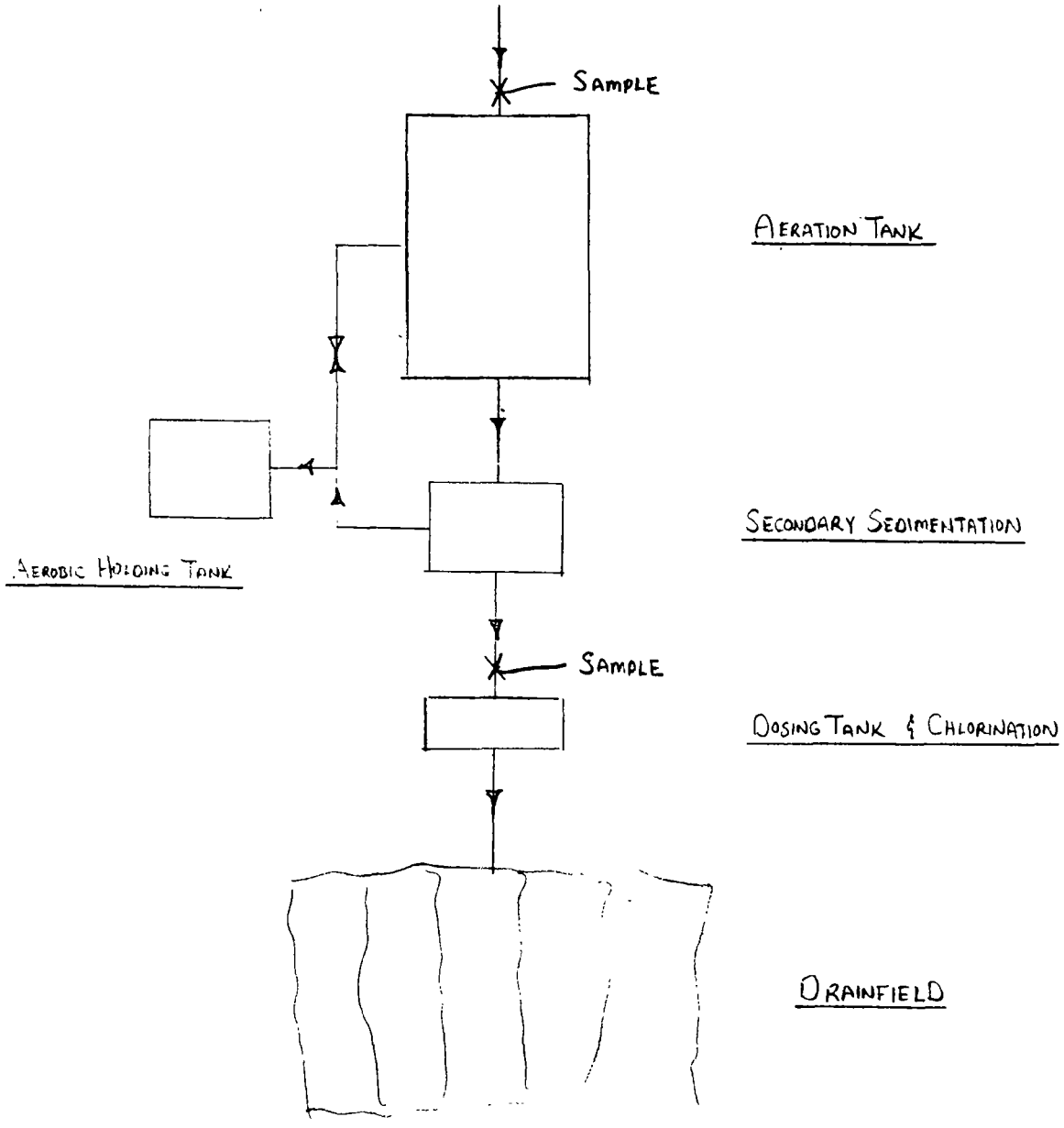

PREPARED BY: KW Schang

Sheet ___ of _____

LOWER FLORIDA ESTUARY STUDY

DADE COUNTY WASTE SOURCE INVENTORY

INFLUENT – EFFLUENT – DATA SUMMARY

PLANT Saratoga Springs

								AVERAGE
DATE - OFF		1-7-70	1/					
FLOW - MGD		.013						
5 DAY B O D mg/l	INFLUENT	159						
	EFFLUENT	76						
	IN - OUT							
	% REMOVAL	52.2						
	LOAD-lbs/day	[illegible]						
C O D mg/l	INFLUENT	939						
	EFFLUENT	154						
	IN - OUT							
	% REMOVAL	83.4						
	LOAD -lbs/day							
T S S mg/l	INFLUENT	776						
	EFFLUENT	88						
	IN - OUT	688						
	% REMOVAL	88.7						
	LOAD- lbs/day	[illegible]						
V S S mg/l	INFLUENT	760						
	EFFLUENT	112						
	IN - OUT	648						
	% REMOVAL	85.3						
	LOAD --lbs/day	[illegible]						
Settlable Solids ml/l	INFLUENT	5						
	EFFLUENT	0.5						
	IN - OUT	4.5						
	% REMOVAL	90						
T O C mg/l	INFLUENT	155						
	EFFLUENT	55						
	IN - OUT	100						
	% REMOVAL	69.0						
	LOAD - lbs/day	[illegible]						

INFLUENT BOD POPULATION EQUIVALENT = [illegible]

EFFLUENT BOD POPULATION EQUIVALENT = 48

LOAD = FLOW (MGD) x EFFLUENT (mg/l) x 8.34 = lbs/day

Released
From The Desk Of
Michael V. Polito

LOWER FLORIDA ESTUARY STUDY
DADE COUNTY WASTE SOURCE INVENTORY
EFFLUENT DATA SUMMARY

Sheet____ of_____

PLANT_____

							AVERAGE or MEDIAN*
DATE - OFF		1-7-71					
FLOW - MGD		.013					
KTELDAHL NITROGEN as N	CONC.-mg/l	10.5					
	LOAD-lbs/day	1.14					
AMMONIA NITROGEN as N	CONC.-mg/l	2.8					
	LOAD-lbs/day	.3					
ORGANIC NITROGEN as N	CONC.-mg/l	7.7					
	LOAD-lbs/day	.83					
NO_2 -NO_3 as N	CONC.-mg/l	12.4					
	LOAD-lbs/day	1.34					
TOTAL PHOSPHORUS A S P	CONC.-mg/l	6.9					
	LOAD-lbs/day	.75					
CHLORIDE	CONC.-mg/l	— *					
TOTAL COLIFORM	CONC - MPN/100ml						
Fecal COLIFORM	CONC - MPN/100ml						

*Calculate Median for Total & Fecal Coliform Concentrations and Average for All Other Parameters.

Sample [illegible] - lab error

Lower Florida Estuary Study
Report on Waterborne Wastes from
Sea Glades Motel Sewage Treatment Plant
S.W. 332nd Street and U.S. 1
Florida City, Dade County, Florida
March 18, 1971

INTRODUCTION

The Sea Glades Motel Sewage Treatment Plant was inspected and sampled on January 8, 1971 by Kenneth Schang. Grab samples of the influent and effluent after chlorination were obtained. The treatment plant utilizes the extended aeration process with chlorination and open sand filters prior to discharge to a soakage pit. The inspection was conducted in conjunction with Mr. S. Nicotra, motel owner.

SUMMARY AND CONCLUSIONS

The treatment plant effected 82.7% removal of BOD prior to the final filtration process. This allowed an effluent concentration of 23 mg/l.

The influent total suspended solids value of 90 mg/l was reduced 67% to 30 mg/l.

A chlorine residual of 1.5 ppm was measured in the effluent immediately prior to discharge to the sand filters.

INVENTORY

1. Basket strainer.
2. Aerated surge tank; diffused air.
3. Aeration tank, diffused air.

4. Secondary sedimentation.

5. Chlorination, chlorine contact tank.

6. Dosing tank.

7. Open sand filter.

8. Aerobic digester; diffused air with waste sludge to be hauled away.

DISCUSSION

(Loads are insignificant due to an extremely low flow.)

Removal of BOD, COD and TOC was 82.7, 64.6 and 47.7% respectively with corresponding effluent concentrations of 23, 131 and 34 mg/l.

Total suspended solids were reduced from 90 mg/l to 30 mg/l for a removal efficiency of 67%. Settleable solids efficiency was 98.3% with an effluent level of 0.1 ml/l.

Nutrient concentrations were as follows: ammonia nitrogen: 18.2 mg/l; organic nitrogen: 1.3 mg/l; nitrate-nitrite as N: 0.2 mg/l; total phosphorus: 0.5 mg/l.

RECOMMENDATIONS

An adequate evaluation of this treatment plant was complicated by the fact that sufficient solids had not accumulated in the aeration tanks due to the newness of the system. A more representative evaluation is recommended at some later date.

Plant operation is conducted by Mr. S. Nicotra, motel owner. Mr. Nicotra is not certified as an operator.

Kenneth Schang

LOWER FLORIDA ESTUARY STUDY
DADE COUNTY WASTE SOURCE INVENTORY
TREATMENT PLANT – GENERAL INFORMATION

DATE OF VISIT 1-8-71
PLANT NAME: SEA GLADES MOTEL
PLANT OWNER: SEA GLADES MOTEL
ADDRESS S.W. 332 STREET AND U.S. 1
TELEPHONE –
COLLECTION SYSTEM – TYPE: GRAVES MOTEL
OWNER: SEA GLADES MOTEL
ADDRESS: S.W. 332 STREET AND U.S. 1
TELEPHONE –

DESIGN AVERAGE DESIGN FLOW: .004 MGD YEAR COMPLETED: 1970
STREAM FLOW NA cfs | DURATION NA days FREQUENCY NA Yrs
CONSTRUCTION COST $4,100
POPULATION SERVED 32 UNIT MOTEL

OPERATION ANNUAL COST NOT DETERMINABLE
PERSONNEL MR NICOTRA - OWNER
LEVEL OF CERTIFICATION NONE
CONDITION OF EQUIPMENT NEW PLANT

OUTFALL TYPE – SIZE – LENGTH –
DISCHARGED TO: SOAKAGE PIT WATER COURSE MILEAGE: NA
LATITUDE – LONGITUDE –

TREATMENT (LIST UNITS IN ORDER, EXCLUDING SLUDGE TREATMENT & DISPOSAL)

GASKET STRAINER, AERATED SURGE TANK, AERATION TANK, SECONDARY SEDIMENTATION, CHLORINATION, DOSING TANK, OPEN SAND FILTER, SOAKAGE PIT.

EXTENDED AERATION

SLUDGE TREATMENT AEROBIC DIGESTER

DISPOSAL TRUCKED AWAY

REMARKS NEW PLANT - LOW SOLIDS IN AERATION TANKS

PREPARED BY: K W Schang

LOWER FLORIDA ESTUARY STUDY
DADE COUNTY WASTE SOURCE INVENTORY
TREATMENT PLANT FIELD SHEET

PLANT SEA GLADES MOTEL

							AVERAGE
DATE ON		1-8-71					
TIME ON		11:30					
DATE OFF		1-8-70					
TIME OFF		12:00					
FLOW	START	No FlowMeter					
	END	No Weir					
	TOTAL						
	24 hr. Flow Rate						
INF.	TEMP. ON	80°F					
	PH - ON	-					
EFFLUENT	TEMP - ON	80°F					
	PH - ON	-					
	Cl. Residual	1.5 PPM					
	CHLORINE-ON						
	CHLORINE-OFF						
	ON-OFF-lbs						

DATE	WASTE CHARACTERISTICS	PLANT OPERATION	AUTO. SAMPLER OPERATION	SAMPLES COLLECTED BY
1-8-70	WEAK - LOW SOLIDS	FAIR - NEW PLANT WITH LOW SOLIDS IN AERATION TANK.	-	SCHANC

LOWER FLORIDA ESTUARY STUDY
DADE COUNTY WASTE SOURCE INVENTORY
TREATMENT PLANT – SCHEMATIC DIAGRAM

PLANT SEA GLADES MOTEL

DRAW COMPLETE FLOW DIAGRAM OF TREATMENT PLANT AND OUTFALL. LABEL EACH UNIT. SHOW LOCATIONS OF SAMPLE COLLECTION AND FLOW MEASURING DEVICES

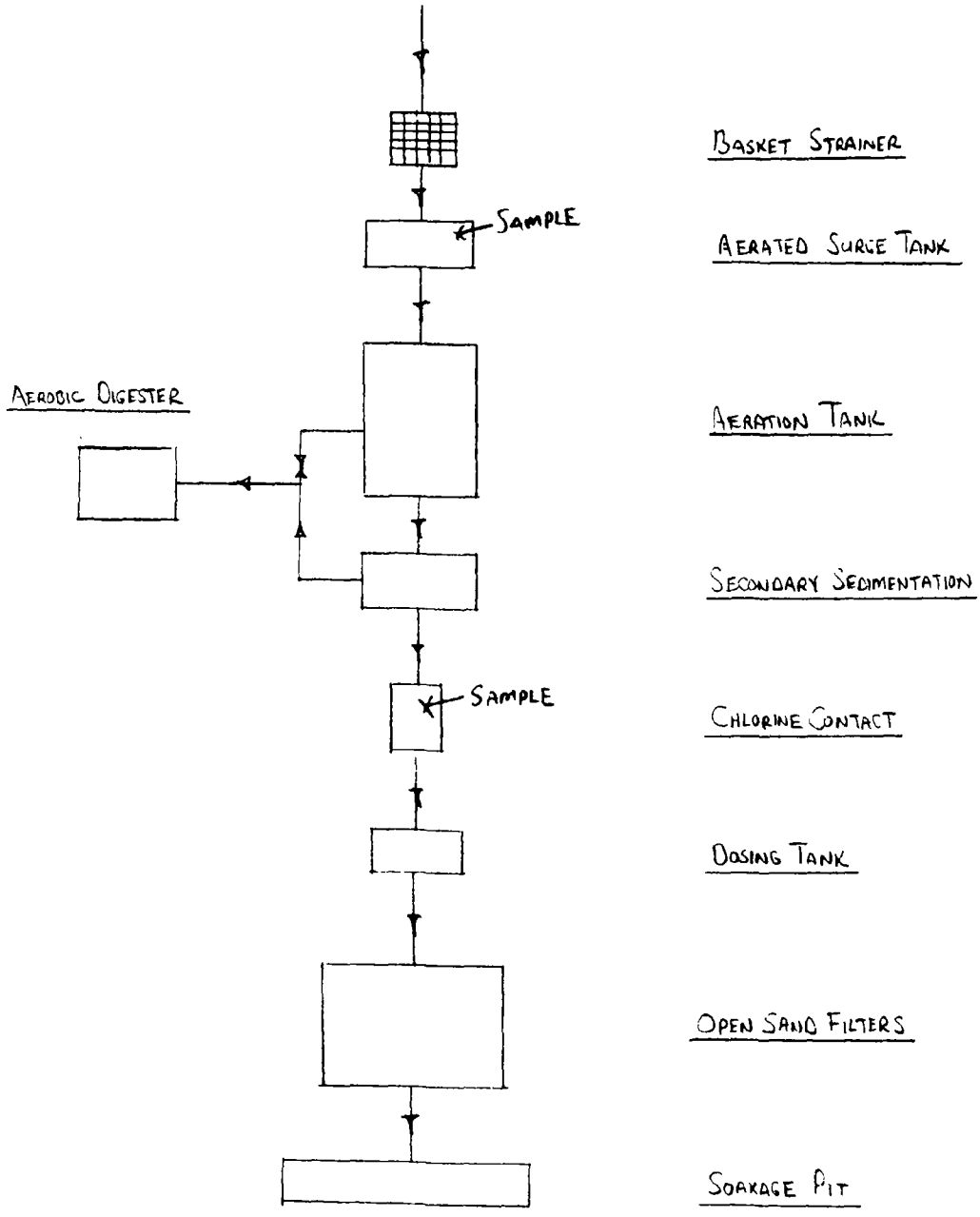

PREPARED BY: KW Schang

Sheet ___ of ___

LOWER FLORIDA ESTUARY STUDY
DADE COUNTY WASTE SOURCE INVENTORY
INFLUENT – EFFLUENT – DATA SUMMARY

PLANT Sea Glades

							AVERAGE
DATE - OFF		1/8/71					
FLOW - MGD		—					
5 DAY B O D mg/l	INFLUENT	133					
	EFFLUENT	23					
	IN - OUT						
	% REMOVAL	82.7					
	LOAD-lbs/day	—					
C O D mg/l	INFLUENT	370					
	EFFLUENT	131					
	IN - OUT						
	% REMOVAL	64.6					
	LOAD -lbs/day	—					
T S S mg/l	INFLUENT	90					
	EFFLUENT	30					
	IN - OUT						
	% REMOVAL	67					
	LOAD- lbs/day	—					
V S S mg/l	INFLUENT	92					
	EFFLUENT	21					
	IN OUT						
	% REMOVAL	77					
	LOAD –lbs/day	—					
Settlable Solids ml/l	INFLUENT	6					
	EFFLUENT	0.1					
	IN - OUT						
	% REMOVAL	98.3					
T O C mg/l	INFLUENT	65					
	EFFLUENT	34					
	IN - OUT	31					
	% REMOVAL	47.7					
	LOAD - lbs/day	—					

INFLUENT BOD POPULATION EQUIVALENT = _____

EFFLUENT BOD POPULATION EQUIVALENT = _____

LOAD = FLOW (MGD) x EFFLUENT (mg/l) x 8.34 = lbs/day

Released
From The Desk Of
Michael V. Polito MP

LOWER FLORIDA ESTUARY STUDY

Sheet____ of_____

DADE COUNTY WASTE SOURCE INVENTORY

EFFLUENT DATA SUMMARY

PLANT Sea Glades

							AVERAGE or MEDIAN*
DATE - OFF		1/8/71					
FLOW - MGD							
KTELDAHL NITROGEN as N	CONC.-mg/l	19.5					
	LOAD-lbs/day	—					
AMMONIA NITROGEN as N	CONC.-mg/l	18.2					
	LOAD-lbs/day	—					
ORGANIC NITROGEN as N	CONC.-mg/l	1.3					
	LOAD-lbs/day	—					
NO_2 -NO_3 as N	CONC.-mg/l	0.2					
	LOAD-lbs/day	—					
TOTAL PHOSPHORUS AS P	CONC.-mg/l	5.0					
	LOAD-lbs/day	—					
CHLORIDE	CONC.-mg/l	139					
TOTAL COLIFORM	CONC - MPN/100ml						
Fecal COLIFORM	CONC - MPN/100ml						

*Calculate Median for Total & Fecal Coliform Concentrations and Average for All Other Parameters.

Lower Florida Estuary Study
Report on Waterborne Wastes from
Seventy-Ninth Street Shopping Center Sewage Treatment Plant
3015 N.W. 79th Street
Miami, Dade County, Florida
March 18, 1971

INTRODUCTION

The Seventy-Ninth Street Shopping Center Sewage Treatment Plant was inspected and sampled on January 13, 1971 by Kenneth Schang. Grab samples of the influent and effluent were obtained. The treatment plant utilizes the extended aeration process with tertiary filtration prior to discharge to a drainfield. Mr. Aborn, construction manager, was the initial contact.

SUMMARY AND CONCLUSIONS

An effluent BOD concentation of 18 ppm indicated a removal efficiency of 92.8%.

Settleable solids were reduced from 4 ml/l to zero ml/l in the effluent.

The chlorine feed was not operating properly causing a zero chlorine residual in the final effluent.

INVENTORY

1. Aeration tank; diffused air system.
2. Secondary sedimentation.
3. Equalizing tank.
4. Tertiary filters.
5. Dosing tank plus chlorination.
6. Aerobic digester; diffused air system.

RESULTS

BOD, COD and TOC removal efficiencies equalled 92.8, 91.8 and 86.2% respectively with 18, 79 and 20 mg/l being the effluent concentrations.

Settleable solids were reduced 100% from 4 ml/l and total suspended solids efficiency was 87.7%. The corresponding suspended solids effluent concentration was 28 mg/l.

Nutrient effluent concentrations were as follows: organic nitrogen: 2.2 mg/l; ammonia nitrogen: 0.2 mg/l; nitrate-nitrite as N: 40 mg/l; total phosphorus 24 mg/l.

DISCUSSION

A proper chemical evaluation of this treatment plant is difficult at the present time due to the low loading condition. Visual inspection did yield information on certain operational inadequacies. There was no chlorine residual in the final effluent, and pop-ups were present in the secondary clarifier. Because a licensed operator has not been contracted by the owner of this facility, it is recommended that one be retained to take over operational responsibility.

Kenneth Schang

LOWER FLORIDA ESTUARY STUDY
DADE COUNTY WASTE SOURCE INVENTORY
TREATMENT PLANT – GENERAL INFORMATION

DATE OF VISIT 1-13-71
PLANT NAME: 79th STREET SHOPPING CENTER
PLANT OWNER: 79th STREET SHOPPING CENTER
ADDRESS 3015 N.W. 79 STREET
TELEPHONE –
COLLECTION SYSTEM – TYPE: SERVES SHOPPING CENTER
OWNER: 79th STREET SHOPPING CENTER
ADDRESS: 3015 N.W. 79 STREET
TELEPHONE –

DESIGN | AVERAGE DESIGN FLOW: .045 MGD YEAR COMPLETED: 1970
STREAM FLOW NA cfs | DURATION NA days FREQUENCY NA Yrs
CONSTRUCTION COST $28,000
POPULATION SERVED 450 PEOPLE ULTIMATELY

OPERATION | ANNUAL COST NOT DETERMINABLE
PERSONNEL MAINTENANCE
LEVEL OF CERTIFICATION NONE
CONDITION OF EQUIPMENT NEW PLANT
OUTFALL | TYPE SIZE – LENGTH –
DISCHARGED TO: DRAINFIELD WATER COURSE MILEAGE: NA
LATITUDE – LONGITUDE –
TREATMENT | (LIST UNITS IN ORDER, EXCLUDING SLUDGE TREATMENT & DISPOSAL)
AERATION TANK, SECONDARY SEDIMENTATION, EQUALIZING TANK, TERTIARY FILTERS, DOSING TANK
PLUS CHLORINATION, DRAINFIELD

JETFLO FILTERS

SLUDGE | TREATMENT AEROBIC DIGESTER

DISPOSAL TRUCKED AWAY

REMARKS | OPERATOR NEEDED

PREPARED BY: KW Schang

LOWER FLORIDA ESTUARY STUDY
DADE COUNTY WASTE SOURCE INVENTORY
TREATMENT PLANT FIELD SHEET

PLANT 79th STREET SHOPPING CENTER

							AVERAGE
DATE ON		1-13-71					
TIME ON		3:00					
DATE OFF		1-13-71					
TIME OFF		3:30					
FLOW	START	No FLOW					
	END						
	TOTAL						
	24 hr. Flow Rate						
INF.	TEMP. ON	80° F					
	PH - ON	-					
EFFLUENT	TEMP - ON	80° F					
	PH - ON	-					
	Cl. Residual	2.1 ppm					
	CHLORINE-ON						
	CHLORINE-OFF						
	ON-OFF-lbs						

DATE	WASTE CHARACTERISTICS	PLANT OPERATION	AUTO. SAMPLER OPERATION	SAMPLES COLLECTED BY
1-13-71	EFFLUENT - TURBID	FAIR - SCUM ON CLARIFIER	-	SCHANG

LOWER FLORIDA ESTUARY STUDY
DADE COUNTY WASTE SOURCE INVENTORY
TREATMENT PLANT – SCHEMATIC DIAGRAM

PLANT 79th STREET SHOPPING CENTER

DRAW COMPLETE FLOW DIAGRAM OF TREATMENT PLANT AND OUTFALL. LABEL EACH UNIT. SHOW LOCATIONS OF SAMPLE COLLECTION AND FLOW MEASURING DEVICES

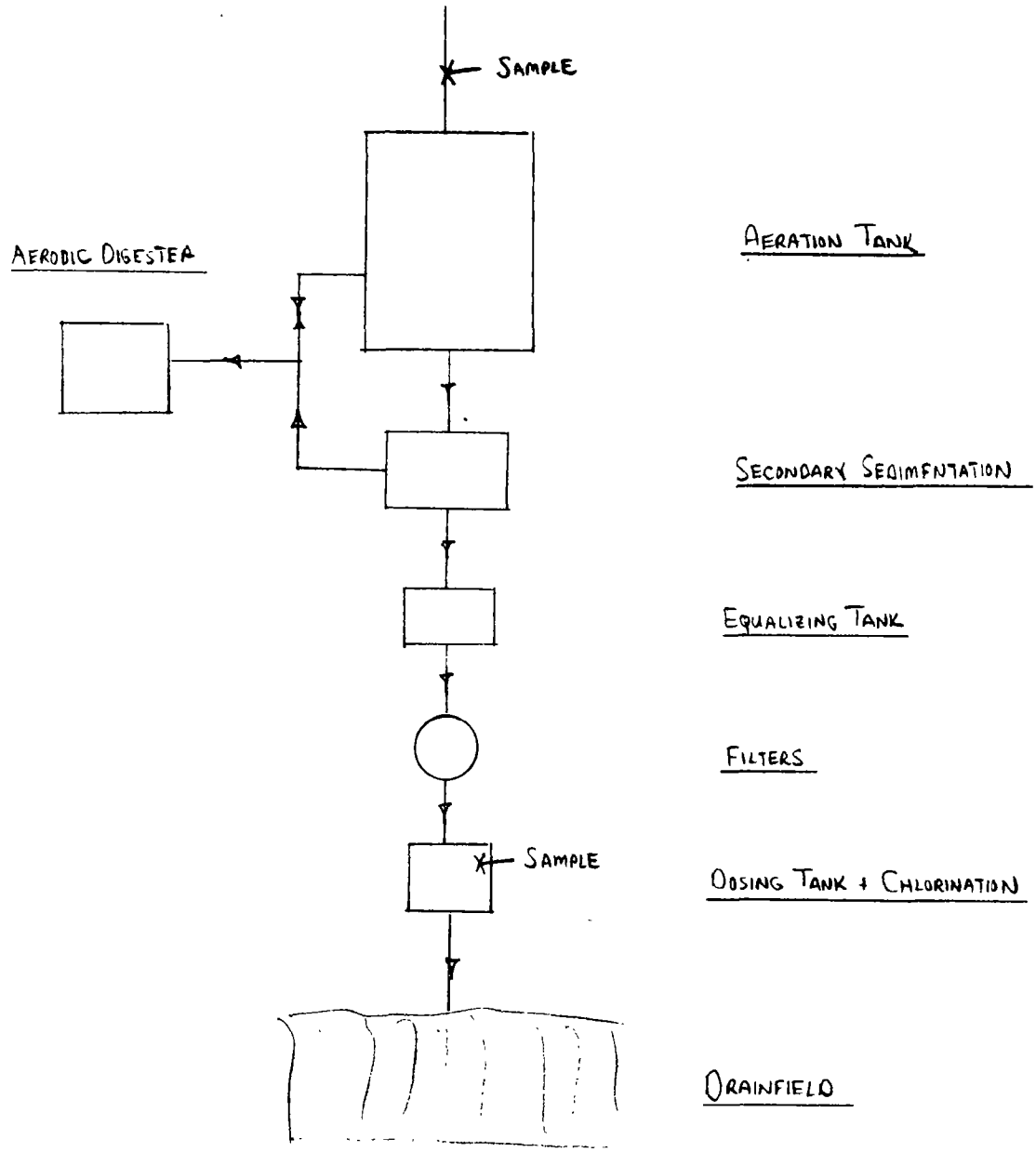

PREPARED BY: KW Schang

LOWER FLORIDA ESTUARY STUDY

Sheet ___ of _____

DADE COUNTY WASTE SOURCE INVENTORY

INFLUENT – EFFLUENT – DATA SUMMARY

PLANT 79th Street Shopping Center

							AVERAGE
DATE - OFF		1/13/71					
FLOW - MGD		—					
5 DAY B O D mg/l	INFLUENT	249					
	EFFLUENT	18					
	IN - OUT						
	% REMOVAL	92.8					
	LOAD-lbs/day	—					
C O D mg/l	INFLUENT	967					
	EFFLUENT	79					
	IN - OUT						
	% REMOVAL	91.8					
	LOAD -lbs/day	—					
T S S mg/l	INFLUENT	228					
	EFFLUENT	28					
	IN - OUT						
	% REMOVAL	87.7					
	LOAD- lbs/day	—					
V S S mg/l	INFLUENT	192					
	EFFLUENT	20					
	IN - OUT						
	% REMOVAL	89.6					
	LOAD –lbs/day	—					
Settlable Solids ml/l	INFLUENT	4.0					
	EFFLUENT	0.0					
	IN - OUT						
	% REMOVAL	100					
		—					
T O C mg/l	INFLUENT	145					
	EFFLUENT	20					
	IN - OUT						
	% REMOVAL	86.2					
	LOAD - lbs/day	—					

INFLUENT BOD POPULATION EQUIVALENT = —

EFFLUENT BOD POPULATION EQUIVALENT = —

LOAD = FLOW (MGD) x EFFLUENT (mg/l) x 8.34 = lbs/day

Released
From The Desk Of
Michael V. Polito

Sheet____ of_____

LOWER FLORIDA ESTUARY STUDY
DADE COUNTY WASTE SOURCE INVENTORY
EFFLUENT DATA SUMMARY

PLANT 79th Street Shopping Center

DATE - OFF							AVERAGE or MEDIAN*
FLOW - MGD							
KTELDAHL NITROGEN as N	CONC.-mg/l	2.4					
	LOAD-lbs/day	—					
AMMONIA NITROGEN as N	CONC.-mg/l	0.2					
	LOAD-lbs/day	—					
ORGANIC NITROGEN as N	CONC.-mg/l	2.2					
	LOAD-lbs/day	—					
NO_2 -NO_3 as N	CONC.-mg/l	40.0					
	LOAD-lbs/day	—					
TOTAL PHOSPHORUS AS P	CONC.-mg/l	24.0					
	LOAD-lbs/day	—					
CHLORIDE	CONC.-mg/l	102					
TOTAL COLIFORM	CONC - MPN/100ml						
Fecal COLIFORM	CONC - MPN/100ml						

*Calculate Median for Total & Fecal Coliform Concentrations and Average for All Other Parameters.

Lower Florida Estuary Study
Report on Waterborne Wastes from
Steak and Brew Restaurant Sewage Treatment Plant
13190 S. Dixie Highway
Miami, Dade County, Florida
February 23, 1971

INTRODUCTION

The Steak and Brew Restaurant Sewage Treatment Plant was inspected and sampled on December 10, 1970 by Kenneth Schang. Grab samples of the influent and effluent prior to chlorination were obtained. The treatment plant is a Marolf Extended Aeration package unit with chlorination prior to discharge to a drainfield. The inspection was conducted in conjunction with Mr. James Barlow who operates the system.

SUMMARY AND CONCLUSIONS

Treatment efficiency was better than 98% for all test parameters. BOD_5 removal exceeded 99% with an effluent loading of 1.29 lbs. per day and a concentration of 10.3 mg/l.

Removal of suspended solids approached 99% with 3.75 lbs. per day being discharged based on the average design flow of .015 MGD. No settleable solids were measured in the effluent.

A chlorine residual of 3 ppm was present in the effluent sample obtained from the dosing tank.

INVENTORY

1. Comminutor.

2. Aerated wet well, aerobic pretreatment prevents septic conditions during periods of low flow.

3. Aeration tanks, diffused air system.

4. Secondary sedimentation.

5. Dosing tank and chlorination.

6. Aerated sludge holding tank.

RESULTS

The treatment plant effected a 99% removal of BOD_5, COD and TOC with the effluent loadings being calculated as 1.29, 6.63 and 2.5 lbs. per day respectively based on the average design flow.

Solids removal proved to be equally as effective. The 40 ml/l settleable solids present in the influent were completely removed. Suspended solids removal, although not as efficient, approached 99%. The analysis showed 30 mg/l to be the effluent concentration with 3.75 lbs. per day being discharged.

The nutrient loadings were as follows: Kjeldahl nitrogen: .31 lbs. per day, nitrate-nitrite nitrogen .0025 lbs. per day, and total phosphorus: .18 lbs. per day.

DISCUSSION

Based on the efficiency evaluation and the visual inspection there are no recommendations to improve operation.

The treatment plant is operated by Mr. James Barlow and Mr. Bud Rollins; both are licensed class "C".

A flow meter should be installed.

Kenneth Schang

LOWER FLORIDA ESTUARY STUDY
DADE COUNTY WASTE SOURCE INVENTORY
TREATMENT PLANT – GENERAL INFORMATION

DATE OF VISIT 12-10-70
PLANT NAME: STEAK AND BREW RESTAURANT
PLANT OWNER: STEAK AND BREW RESTAURANT
ADDRESS 13190 S. DIXIE HIGHWAY
TELEPHONE
COLLECTION SYSTEM – TYPE: SERVES RESTAURANT
OWNER: STEAK AND BREW RESTAURANT
ADDRESS: 13190 S. DIXIE HIGHWAY
TELEPHONE

DESIGN AVERAGE DESIGN FLOW: .015 MGD YEAR COMPLETED: 1958
STREAM FLOW NA cfs DURATION NA days FREQUENCY NA Yrs
CONSTRUCTION COST NOT KNOWN
POPULATION SERVED 200 SEAT RESTAURANT

OPERATION ANNUAL COST 1,000
PERSONNEL JAMES GARLOW AND BUD ROLLINS
LEVEL OF CERTIFICATION CLASS "C" OPERATORS
CONDITION OF EQUIPMENT GOOD

OUTFALL TYPE NOT APPLICABLE SIZE NOT APPLICABLE LENGTH NOT APPLICABLE
DISCHARGED TO: GROUND WATER COURSE MILEAGE: NOT APPLICABLE
LATITUDE – LONGITUDE –

TREATMENT (LIST UNITS IN ORDER, EXCLUDING SLUDGE TREATMENT & DISPOSAL)
EXTENDED AERATION - MAROLF
SCREENING, GRITTER, METERING, AERATION TANKS, SECONDARY SEDIMENTATION, DOSING TANK - CHLORINATION, DRAINFIELD

SLUDGE TREATMENT SLUDGE HOLDING TANK - AERATED

DISPOSAL TRUCKED AWAY

REMARKS

PREPARED BY: Kurt Schwarz

LOWER FLORIDA ESTUARY STUDY
DADE COUNTY WASTE SOURCE INVENTORY
TREATMENT PLANT FIELD SHEET

PLANT STEAK AND BREW

							AVERAGE
DATE ON		12-10-70					
TIME ON		1:30					
DATE OFF		12-10-70					
TIME OFF		2:15					
FLOW	START	NO FLOW					
	END	NO FLOW METER					
	TOTAL						
	24 hr. Flow Rate						
INF.	TEMP. ON	27°	SAMPLED AT	2:00			
	PH - ON	–					
EFFLUENT	TEMP - ON	27°	SAMPLED AT	2:05			
	PH - ON	–					
	Cl. Residual	3 PPM					
	CHLORINE-ON						
	CHLORINE-OFF						
	ON-OFF-lbs						

DATE	WASTE CHARACTERISTICS	PLANT OPERATION	AUTO. SAMPLER OPERATION	SAMPLES COLLECTED BY
12-10-70	CONTAINED LARGE AMOUNTS OF DRAINCLEANER	GOOD - CLEAR EFFLUENT	–	SCHANG

LOWER FLORIDA ESTUARY STUDY
DADE COUNTY WASTE SOURCE INVENTORY
TREATMENT PLANT – SCHEMATIC DIAGRAM

PLANT STEAK AND BREW

DRAW COMPLETE FLOW DIAGRAM OF TREATMENT PLANT AND OUTFALL. LABEL EACH UNIT. SHOW LOCATIONS OF SAMPLE COLLECTION AND FLOW MEASURING DEVICES.

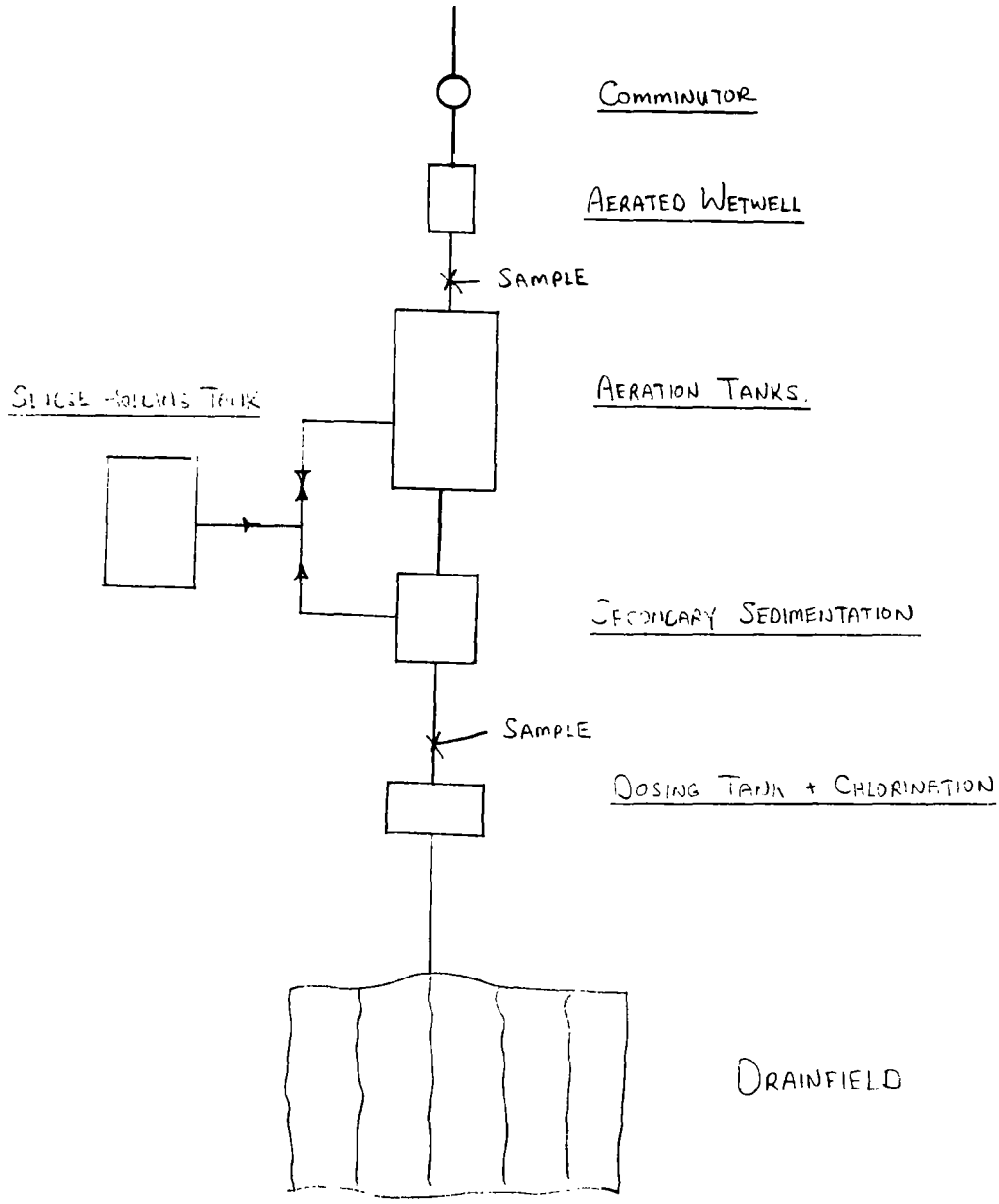

PREPARED BY: KW Schang

Sheet ___ of _____

LOWER FLORIDA ESTUARY STUDY
DADE COUNTY WASTE SOURCE INVENTORY
INFLUENT – EFFLUENT DATA SUMMARY

PLANT Steak & Brew

							AVERAGE
DATE - OFF		12/10/70					
FLOW - MGD		.015					
5 DAY B O D mg/l	INFLUENT	71240					
	EFFLUENT	10.3					
	IN - OUT						
	% REMOVAL	> 99.2					
	LOAD-lbs/day	1.29					
C O D mg/l	INFLUENT	20,533					
	EFFLUENT	53					
	IN - OUT						
	% REMOVAL	99.7					
	LOAD -lbs/day	6.63					
T S S mg/l	INFLUENT	2,750					
	EFFLUENT	30					
	IN - OUT						
	% REMOVAL	98.9					
	LOAD- lbs/day	3.75					
V S S mg/l	INFLUENT	2,700					
	EFFLUENT	16					
	IN - OUT						
	% REMOVAL	99.4					
	LOAD –lbs/day	2					
Settlable Solids ml/l	INFLUENT	> 40					
	EFFLUENT	0.1					
	IN - OUT						
	% REMOVAL	100					
T O C mg/l	INFLUENT	2,000					
	EFFLUENT	20					
	IN - OUT						
	% REMOVAL	99.2					
	LOAD - lbs/day	2.5					

INFLUENT BOD POPULATION EQUIVALENT = 963

EFFLUENT BOD POPULATION EQUIVALENT = 8

LOAD = FLOW (MGD) x EFFLUENT (mg/l) x 8.34 = lbs/day

From The Desk Of Michael V. Polito

LOWER FLORIDA ESTUARY STUDY
DADE COUNTY WASTE SOURCE INVENTORY
EFFLUENT DATA SUMMARY

Sheet____ of_____

PLANT Steak • Brew

							AVERAGE or MEDIAN*
DATE - OFF		12/10					
FLOW - MGD		.015					
KTELDAHL NITROGEN as N	CONC.-mg/l	2.5					
	LOAD-lbs/day	.31					
AMMONIA NITROGEN as N	CONC.-mg/l	1.6					
	LOAD-lbs/day	.2					
ORGANIC NITROGEN as N	CONC.-mg/l	0.9					
	LOAD-lbs/day	.11					
NO_2 -NO_3 as N	CONC.-mg/l	0.02					
	LOAD-lbs/day	.0025					
TOTAL PHOSPHORUS AS P	CONC.-mg/l	1.4					
	LOAD-lbs/day	.18					
CHLORIDE	CONC.-mg/l	110					
TOTAL COLIFORM	CONC - MPN/100ml						
Fecal COLIFORM	CONC - MPN/100ml						

*Calculate Median for Total & Fecal Coliform Concentrations and Average for All Other Parameters.

Lower Florida Estuary Study
Report on Waterborne Wastes from
Sweden House Restaurant Sewage Treatment Plant
14875 S. Dixie Highway
Naranja, Dade County, Florida
March 18, 1971

INTRODUCTION

The Sweden House Restaurant Sewage Treatment Plant was inspected and sampled on December 9, 1970 by Kenneth Schang and Joe Hopson (Dade County Pollution Control Inspector). Grab samples of the influent and effluent were obtained. The treatment plant utilizes the extended aeration process with chlorination prior to discharge to a drainfield. Initial contact was made through the restaurant manager.

RESULTS

BOD removal efficiency equalled 72.2% producing 17.5 mg/l in the effluent.

Settleable solids were reduced to 0 from the influent value of 1 ml/l.

At the time of inspection, the liquid chlorine was not dripping into the dosing tank due to some malfunction. Although there was no chlorine residual measurable in the effluent the problem was alleviated by the manager upon notification.

INVENTORY

1. Primary sedimentation utilizing a septic tank.
2. Aeration tank, diffused air system.

3. Secondary sedimentation.

4. Dosing tank plus chlorination.

5. Aerobic sludge digester, diffused air system.

RESULTS

Although treatment efficiencies did not always seem adequate, effluent discharges and loadings were relatively small.

BOD, COD and TOC estimated loadings were 2.9, 7.34 and 6.26 lbs. per day based on the average design flow of .02 MGD. The TOC concentration in the effluent was 37.5 mg/l while the influent value equalled 25.5 mg/l.

Suspended solids concentrations were relatively low with 14 mg/l being reduced to 4 mg/l for a removal of 71.4%. The estimated loading is insignificant at 0.67 lbs. per day.

The influent settleable solids were reduced to a value of zero in the effluent.

Nutrient discharge was also small: organic nitrogen: 2.1 mg/l and 0.35 lbs. per day (estimate), nitrate-nitrite as N: 1 mg/l and 0.17 lbs. per day (estimate), and total phosphorus: 12 mg/l and 2 lbs. per day (estimate).

DISCUSSION

One recommendation is with regard to the low loading condition being placed on the treatment plant. Because of this, a proper solids

concentration may be difficult to maintain in the aeration tank. Further investigation toward eliminating this condition is recommended.

Mr. Jack Coles, plant operator, is licensed class "C".

General plant appearance was good.

Kenneth Schang

LOWER FLORIDA ESTUARY STUDY
DADE COUNTY WASTE SOURCE INVENTORY
TREATMENT PLANT – GENERAL INFORMATION

DATE OF VISIT 12-9-70
PLANT NAME: SWEDEN HOUSE
PLANT OWNER: SWEDEN HOUSE
ADDRESS 14375 S. DIXIE HIGHWAY
TELEPHONE 238-8852
COLLECTION SYSTEM – TYPE: SERVES RESTAURANT
OWNER: SWEDEN HOUSE
ADDRESS: 14375 S. DIXIE HIGHWAY
TELEPHONE 238-8852

DESIGN AVERAGE DESIGN FLOW: .02 MGD YEAR COMPLETED: 1967
STREAM FLOW NA cfs DURATION NA days FREQUENCY NA Yrs
CONSTRUCTION COST $25,000
POPULATION SERVED 500 CUSTOMERS PER DAY

OPERATION ANNUAL COST [illegible]
PERSONNEL [illegible] - OPERATOR
LEVEL OF CERTIFICATION LICENSED OPERATOR CLASS "D"
CONDITION OF EQUIPMENT [illegible]
OUTFALL TYPE NOT APPLICABLE SIZE NOT APPLICABLE LENGTH NOT APPLICABLE
DISCHARGED TO: DRAINFIELD WATER COURSE MILEAGE: NOT APPLICABLE
LATITUDE NOT APPLICABLE LONGITUDE NOT APPLICABLE
TREATMENT (LIST UNITS IN ORDER, EXCLUDING SLUDGE TREATMENT & DISPOSAL)
[illegible] SEDIMENTATION), AERATION TANK, SECONDARY SEDIMENTATION, DOSING TANK PLUS
CHLORINATION, DRAINFIELD

EXTENDED AERATION

SLUDGE TREATMENT AEROBIC DIGESTION PRIMARY SEPTIC TANK - ANAEROBIC

DISPOSAL TRUCKED AWAY TRUCKED AWAY

REMARKS CLEAR EFFLUENT

PREPARED BY: RW Schang

LOWER FLORIDA ESTUARY STUDY
DADE COUNTY WASTE SOURCE INVENTORY
TREATMENT PLANT FIELD SHEET

PLANT Sweden House

							AVERAGE
DATE ON		12-9-70					
TIME ON		9:00					
DATE OFF		12-9-70					
TIME OFF		10:00					
FLOW	START	No Flow					
	END	Meter					
	TOTAL						
	24 hr. Flow Rate						
INF.	TEMP. ON	28°C	Sampled at	9:35			
	PH - ON	–					
EFFLUENT	TEMP - ON	27°C	Sampled at	9:40			
	PH - ON	–					
	Cl. Residual	.15 ppm					
	CHLORINE-ON						
	CHLORINE-OFF						
	ON-OFF-lbs						

DATE	WASTE CHARACTERISTICS	PLANT OPERATION	AUTO. SAMPLER OPERATION	SAMPLES COLLECTED BY
[illegible]	Large quantity of floatable material (presumably from vegetable preparation).	Good - Clear Effluent No Chlorination at arrival. Chlorination started upon notification	–	Schang

LOWER FLORIDA ESTUARY STUDY
DADE COUNTY WASTE SOURCE INVENTORY
TREATMENT PLANT – SCHEMATIC DIAGRAM

PLANT SWEDEN HOUSE

DRAW COMPLETE FLOW DIAGRAM OF TREATMENT PLANT AND OUTFALL. LABEL EACH UNIT. SHOW LOCATIONS OF SAMPLE COLLECTION AND FLOW MEASURING DEVICES

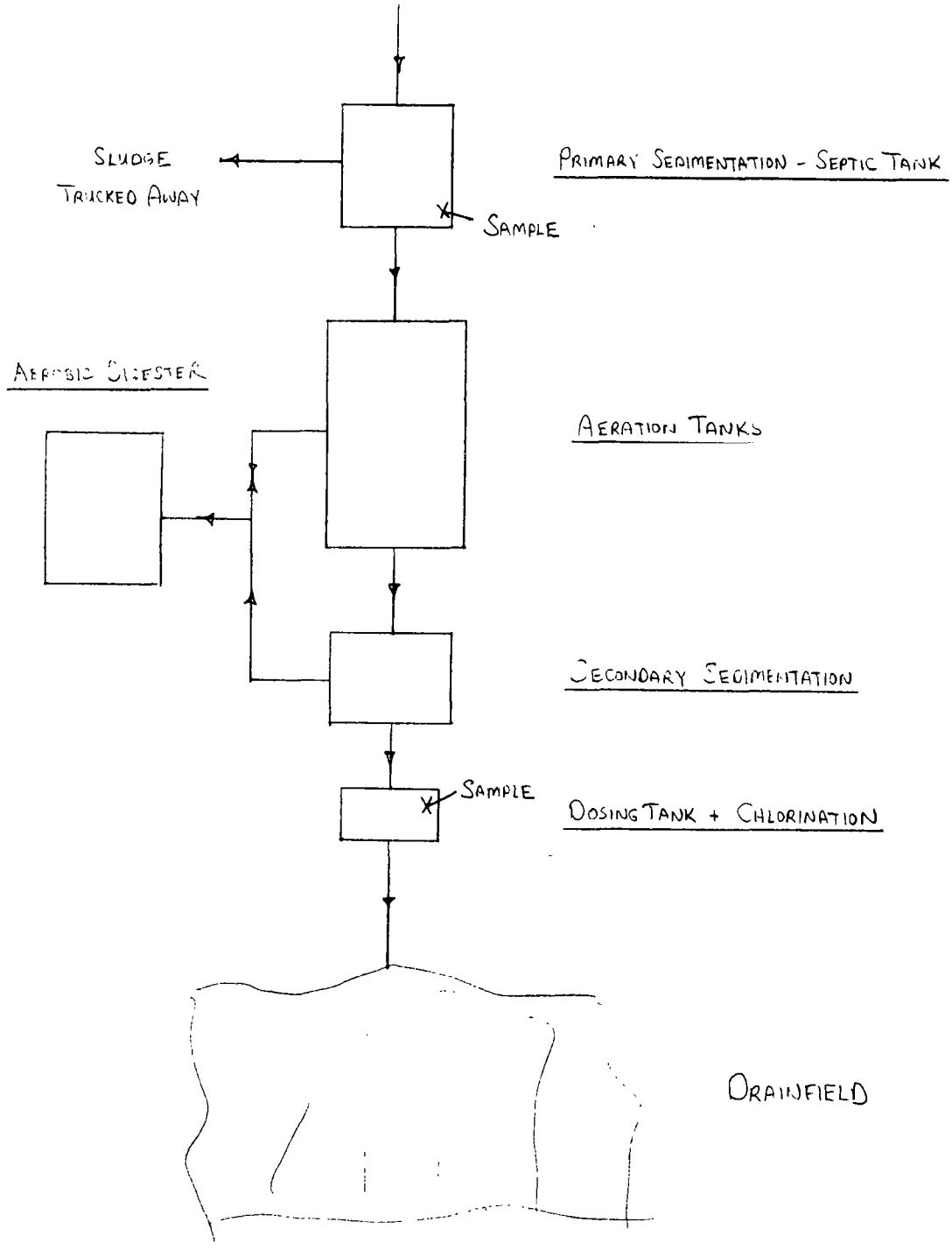

PREPARED BY: KW Schang

LOWER FLORIDA ESTUARY STUDY

Sheet ___ of ___

DADE COUNTY WASTE SOURCE INVENTORY

INFLUENT – EFFLUENT – DATA SUMMARY

PLANT Sweden House

							AVERAGE
DATE - OFF		12/~~10~~ 9					
FLOW - MGD		.02					
5 DAY BOD mg/l	INFLUENT	63					
	EFFLUENT	17.5					
	IN - OUT						
	% REMOVAL	[illegible]					
	LOAD-lbs/day	2.919					
COD mg/l	INFLUENT	493					
	EFFLUENT	44					
	IN - OUT						
	% REMOVAL	[illegible]					
	LOAD -lbs/day	7.34					
TSS mg/l	INFLUENT	14					
	EFFLUENT	4					
	IN - OUT						
	% REMOVAL	71.4					
	LOAD- lbs/day	.67					
VSS mg/l	INFLUENT	6					
	EFFLUENT	4					
	IN - OUT						
	% REMOVAL	[illegible]					
	LOAD –lbs/day	.68					
Settlable Solids ml/l	INFLUENT	1					
	EFFLUENT	nil					
	IN - OUT						
	% REMOVAL	[illegible]					
TOC mg/l	INFLUENT	25.5					
	EFFLUENT	37.5					
	IN - OUT						
	% REMOVAL	---					
	LOAD - lbs/day	6.26					

INFLUENT BOD POPULATION EQUIVALENT = 61

EFFLUENT BOD POPULATION EQUIVALENT = 17

LOAD = FLOW (MGD) x EFFLUENT (mg/l) x 8.34 = lbs/day

From The Desk Of Michael V. Polito

LOWER FLORIDA ESTUARY STUDY
DADE COUNTY WASTE SOURCE INVENTORY
EFFLUENT DATA SUMMARY

Sheet____ of_____

PLANT Sweden House

DATE - OFF		12/~~10~~9					AVERAGE or MEDIAN*
FLOW - MGD		.02					
KTELDAHL NITROGEN as N	CONC.-mg/l	3.1					
	LOAD-lbs/day	.52					
AMMONIA NITROGEN as N	CONC.-mg/l	1.0					
	LOAD-lbs/day	.17					
ORGANIC NITROGEN as N	CONC.-mg/l	2.1					
	LOAD-lbs/day	.35					
NO_2 -NO_3 as N	CONC.-mg/l	1.0					
	LOAD-lbs/day	.17					
TOTAL PHOSPHORUS A S P	CONC.-mg/l	12.0					
	LOAD-lbs/day	2					
CHLORIDE	CONC.-mg/l	138					
TOTAL COLIFORM	CONC - MPN/100ml						
Fecal COLIFORM	CONC - MPN/100ml						

*Calculate Median for Total & Fecal Coliform Concentrations and Average for All Other Parameters.

Lower Florida Estuary Study
Report on Waterborne Wastes from
Westchester Hospital Sewage Treatment Plant
7500 Coral Way
Coral Gables, Dade County, Florida
March 18, 1971

INTRODUCTION

The Westchester Hospital Sewage Treatment Plant was inspected and sampled on December 17, 1970 at 11:00 a.m., by Kenneth Schang and Gary Cohen (Dade County Pollution Control Inspector). Grab samples of the influent and effluent prior to chlorination were obtained. The plant is composed of two .015 MGD Chicago Pump-Extended Aeration package units with effluent being discharged into the Coral Gables Canal. At the time of inspection only the west plant was in operation. The inspection was conducted in conjuntion with Mr. Robert Lacey who maintains the facility.

SUMMARY AND CONCLUSIONS

Operating efficiencies for BOD and settleable solids are adequate.

BOD removal equalled 97.8% with an effluent concentration of 14.6 mg/l and stream loading 1.82 lbs. per day based on the average design flow for the operational unit of .015 MGD.

An influent settleable solids loading of >40 ml/l was reduced to 0.2 ml/l producing an efficiency of 99.5%.

The chlorine residual was measured at 1.5 ppm in the contact chamber, prior to canal discharge.

INVENTORY

The standard extended air type package plant incorporated:

1. Comminutor.
2. Aeration tanks, diffused air system.
3. Secondary sedimentation, air lifted return sludge.
4. Chlorination prior to canal discharge.
5. Sludge holding tank - anerobic.

RESULTS

All chemical evaluations indicated satisfactory operation. BOD and TOC removals were 97.8 and 83.8% producing effluent concentrations of 14.6 and 32.5 mg/l. The COD removal was unsatisfactory. An influent concentration of 479 mg/l was reduced to 475 mg/l for a discharge of 59.4 lbs. per day calculated at an average design flow of .015 MGD.

The total suspended solids effluent concentration was measured at 114 mg/l with 14.26 lbs. per day leaving the plant, for an 85.8% removal efficiency. Settleable solids were reduced from >40 ml/l to 0.2 ml/l for an efficiency of 99.5%.

Kjeldahl nitrogen, nitrate-nitrite as N, and total phosphorus effluent concentrations were 8.4, 1.1 and 5.7 mg/l respectively, with 1.05, 0.14 and 0.715 lbs. per day respectively being the corresponding loadings.

DISCUSSION

The overall appearance of the system appeared adequate with mechanical units operating properly. However, the following recommendations are necessary:

1. A closer study of the plant is required primarily due to the origin of the waste treated and its ultimate disposal to a canal.

2. The local pollution control agency should monitor this treatment plant closely to at least ascertain that proper chlorine residuals are being maintained; again, this is due to the origin of the waste being treated.

3. Mr. Lacey is not licensed as an operator.

4. A flow meter should be installed.

Kenneth Schang

LOWER FLORIDA ESTUARY STUDY
DADE COUNTY WASTE SOURCE INVENTORY
TREATMENT PLANT – GENERAL INFORMATION

DATE OF VISIT 12-17-70
PLANT NAME: WESTCHESTER HOSPITAL
PLANT OWNER: WESTCHESTER HOSPITAL
ADDRESS 7500 CORAL WAY
TELEPHONE 226-5252
COLLECTION SYSTEM – TYPE: SERVES HOSPITAL
OWNER: WESTCHESTER HOSPITAL
ADDRESS: 7500 CORAL WAY
TELEPHONE 226-5252

DESIGN AVERAGE DESIGN FLOW: .03 MGD YEAR COMPLETED: 1965
STREAM FLOW NK cfs | DURATION NK days FREQUENCY NK Yrs
CONSTRUCTION COST 160,000
POPULATION SERVED 100 [illegible] + EMPLOYEES

OPERATION ANNUAL COST NOT KNOWN
PERSONNEL [illegible]
LEVEL OF CERTIFICATION [illegible]
CONDITION OF EQUIPMENT [illegible]

OUTFALL TYPE [illegible] SIZE 8 INCH LENGTH 50 FEET
DISCHARGED TO: CORAL GABLES CANAL WATER COURSE MILEAGE: –
LATITUDE – LONGITUDE –

TREATMENT (LIST UNITS IN ORDER, EXCLUDING SLUDGE TREATMENT & DISPOSAL)
[illegible], PRIMARY TANKS, SECONDARY SEDIMENTATION, CHLORINE CONTACT, [illegible]
CHICAGO PUMP, EXTENDED AERATION

SLUDGE TREATMENT SLUDGE HOLDING TANK, AEROBIC

DISPOSAL TRUCKED AWAY

REMARKS ONLY ONE UNIT IS IN OPERATION - CAPABLE OF TREATING .015 MGD
2 .015 MGD CAPACITY UNITS ARE ON SIGHT.

PREPARED BY: KL Schwing

Sheet 2 of 3

LOWER FLORIDA ESTUARY STUDY
DADE COUNTY WASTE SOURCE INVENTORY
TREATMENT PLANT FIELD SHEET

PLANT WESTCHESTER HOSPITAL

							AVERAGE
DATE ON		12-17-70					
TIME ON		11:00					
DATE OFF		12-17-70					
TIME OFF		11:45					
FLOW	START	No FLOW					
	END	METER					
	TOTAL	No WEIR					
	24 hr. Flow Rate						
INF.	TEMP. ON	30°C	SAMPLED AT	11:30			
	PH - ON	–					
EFFLUENT	TEMP - ON	27°C	SAMPLED AT	11:35			
	PH - ON	–					
	Cl. Residual	1.5 PPM					
	CHLORINE-ON						
	CHLORINE-OFF						
	ON-OFF-lbs						

DATE	WASTE CHARACTERISTICS	PLANT OPERATION	AUTO. SAMPLER OPERATION	SAMPLES COLLECTED BY
12-17-70	CONSIDERABLE AMOUNT OF TISSUE	OK - TURBID EFFLUENT	–	SCHANG

LOWER FLORIDA ESTUARY STUDY
DADE COUNTY WASTE SOURCE INVENTORY
TREATMENT PLANT – SCHEMATIC DIAGRAM

PLANT WESTCHESTER HOSPITAL

DRAW COMPLETE FLOW DIAGRAM OF TREATMENT PLANT AND OUTFALL. LABEL EACH UNIT. SHOW LOCATIONS OF SAMPLE COLLECTION AND FLOW MEASURING DEVICES

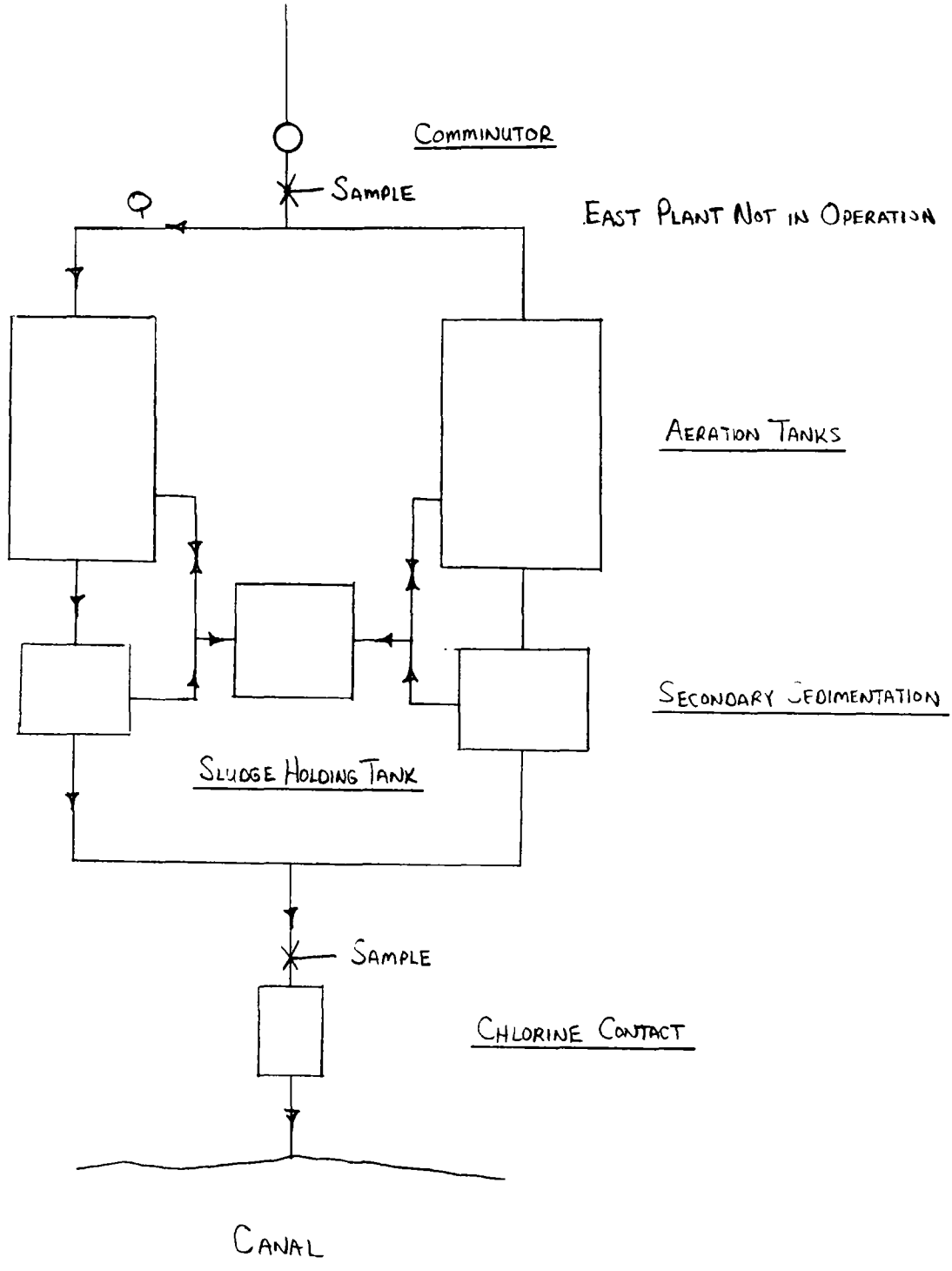

PREPARED BY: KW Schang

LOWER FLORIDA ESTUARY STUDY

Sheet ___ of _____

DADE COUNTY WASTE SOURCE INVENTORY

INFLUENT – EFFLUENT – DATA SUMMARY

PLANT West Hosp

								AVERAGE
DATE - OFF		12/17	12/18					
FLOW - MGD		.315						
5 DAY BOD mg/l	INFLUENT	665						
	EFFLUENT	14.6						
	IN - OUT							
	% REMOVAL	[illegible]						
	LOAD-lbs/day	1.365	1.365					
COD mg/l	INFLUENT	479						
	EFFLUENT	475						
	IN - OUT							
	% REMOVAL	[illegible]						
	LOAD -lbs/day	59.42	[illegible]					
TSS mg/l	INFLUENT	800						
	EFFLUENT	[illegible]						
	IN - OUT							
	% REMOVAL	[illegible]						
	LOAD- lbs/day	[illegible]	[illegible]					
VSS mg/l	INFLUENT	740						
	EFFLUENT	104						
	IN - OUT							
	% REMOVAL	[illegible]						
	LOAD –lbs/day	12.01	[illegible]					
Settlable Solids ml/l	INFLUENT	7.10						
	EFFLUENT	.2						
	IN - OUT							
	% REMOVAL	[illegible]						
TOC mg/l	INFLUENT	[illegible]						
	EFFLUENT	[illegible]						
	IN - OUT							
	% REMOVAL	[illegible]						
	LOAD - lbs/day	4.665	[illegible]					

INFLUENT BOD POPULATION EQUIVALENT = 301

EFFLUENT BOD POPULATION EQUIVALENT = 11

LOAD = FLOW (MGD) x EFFLUENT (mg/l) x 8.34 = lbs/day

Sheet____ of_____

LOWER FLORIDA ESTUARY STUDY
DADE COUNTY WASTE SOURCE INVENTORY
EFFLUENT DATA SUMMARY

PLANT West Hosp

							AVERAGE or MEDIAN*
DATE - OFF		12/17					
FLOW - MGD							
KTELDAHL NITROGEN as N	CONC.-mg/l	8.4					
	LOAD-lbs/day	105	1.05				
AMMONIA NITROGEN as N	CONC.-mg/l	6.2					
	LOAD-lbs/day	775	.775				
ORGANIC NITROGEN as N	CONC.-mg/l	2.2					
	LOAD-lbs/day	.275	.275				
NO_2 -NO_3 as N	CONC.-mg/l	1.1					
	LOAD-lbs/day	.14	.14				
TOTAL PHOSPHORUS AS P	CONC.-mg/l	5.7					
	LOAD-lbs/day	.715	.715				
CHLORIDE	CONC.-mg/l	39					
TOTAL COLIFORM	CONC - MPN/100ml						
Fecal COLIFORM	CONC - MPN/100ml						

*Calculate Median for Total & Fecal Coliform Concentrations and Average for All Other Parameters.

Lower Florida Estuary Study
Report on Waterborne Wastes from
Winn Dixie Stores Sewage Treatment Plant
1051 S.E. 8th Street
Hialeah, Dade County, Florida
March 18, 1971

INTRODUCTION

The Winn Dixie Stores Sewage Treatment Plant was inspected and sampled on December 1, 1970 by Kenneth Schang and Frank Ansley (Dade County Pollution Control Inspector). Grab samples of the influent were obtained. The effluent was not sampled because the tertiary filters were not in operation at the time. Prior to a return inspection the plan to phase out the treatment plant was confirmed and the second sampling was cancelled.

The treatment plant utilizes the complete mix process with tertiary filtration and chloration prior to discharge to a soakage pit. The inspection was conducted in conjunction with Mr. G. Seiler, P.E. representative of the responsible consulting engineering firm.

INVENTORY

1. Comminutor in parallel with a bar rack.
2. Aeration tank; diffused air system.
3. Settling tubes.
4. Mixed media filter.
5. Chlorination.
6. Aerobic digester; diffused air system.

DISCUSSION

BOD, COD and TOC influent values were >770, 4,218 and 1160 mg/l respectively.

RECOMMENDATIONS

The influent chemical evaluation is indicative of the type of waste being received by this treatment plant. The sewage consists mainly of washdown water and waste water from produce preparation. Conversation with Mr. Seiler yielded information that the treatment plant had been in trouble quite a number of times. This was due to the type of waste and inefficiency of the tube settlers.

Kenneth Schang

LOWER FLORIDA ESTUARY STUDY
DADE COUNTY WASTE SOURCE INVENTORY
TREATMENT PLANT – GENERAL INFORMATION

DATE OF VISIT 12-1-70
PLANT NAME: WINN DIXIE STORES
PLANT OWNER: WINN DIXIE STORES
ADDRESS 1051 S. EAST 8 STREET
TELEPHONE 887-8161
COLLECTION SYSTEM – TYPE: SERVES OFFICES AND WAREHOUSES
OWNER: WINN DIXIE STORES
ADDRESS: 1051 S. EAST 8 STREET
TELEPHONE 887-8161

DESIGN AVERAGE DESIGN FLOW: .04 MGD YEAR COMPLETED:
STREAM FLOW NA cfs DURATION NA days FREQUENCY NA Yrs
CONSTRUCTION COST NOT KNOWN
POPULATION SERVED 100# BOD PER DAY LOADING RATE

OPERATION ANNUAL COST NOT KNOWN
PERSONNEL MAINTENANCE PERSONNEL
LEVEL OF CERTIFICATION NONE
CONDITION OF EQUIPMENT [illegible] – FAIR

OUTFALL TYPE [illegible] SIZE NOT [illegible] LENGTH NOT APPLICABLE
DISCHARGED TO: [illegible] WATER COURSE MILEAGE: NOT APP. [illegible]
LATITUDE [illegible] LONGITUDE NOT APPLICABLE

TREATMENT (LIST UNITS IN ORDER, EXCLUDING SLUDGE TREATMENT & DISPOSAL)
[illegible] OR [illegible] [illegible] TUBE [illegible] MIXED MEDIA FILTER
[illegible] TION

SLUDGE TREATMENT AEROBIC DIGESTER

DISPOSAL [illegible]

REMARKS
1. PLANT TREATS COMMERCIAL AND INDUSTRIAL WASTES (PRODUCE AND WASH DOWN)
2. TUBE SETTLERS PREFORM POORLY.
3. MIXED MEDIA FILTER WAS NOT OPERATIVE AT TIME OF VISIT.
4. NO EFFLUENT AT TIME OF VISIT

PREPARED BY: KW Schang

LOWER FLORIDA ESTUARY STUDY
DADE COUNTY WASTE SOURCE INVENTORY
TREATMENT PLANT FIELD SHEET

PLANT WINN DIXIE STORES

							AVERAGE
DATE ON		12-1-70					
TIME ON		9:00					
DATE OFF		12-1-70					
TIME OFF		9:45					
FLOW	START	NO EFFLUENT					
	END	AT TIME					
	TOTAL	OF VISIT					
	24 hr. Flow Rate						
INF.	TEMP. ON	27°C	SAMPLE AT 9:25				
	PH - ON						
EFFLUENT	TEMP - ON	–					
	PH - ON	–					
	Cl. Residual	–					
	CHLORINE-ON						
	CHLORINE-OFF						
	ON-OFF-lbs						

DATE	WASTE CHARACTERISTICS	PLANT OPERATION	AUTO. SAMPLER OPERATION	SAMPLES COLLECTED BY
[illegible]		FILTERS (TERTIARY) NOT IN OPERATION. NO EFFLUENT AT TIME OF VISIT.	–	SCHANG
			–	

LOWER FLORIDA ESTUARY STUDY
DADE COUNTY WASTE SOURCE INVENTORY
TREATMENT PLANT – SCHEMATIC DIAGRAM

PLANT WINN DIXIE STORES

DRAW COMPLETE FLOW DIAGRAM OF TREATMENT PLANT AND OUTFALL. LABEL EACH UNIT. SHOW LOCATIONS OF SAMPLE COLLECTION AND FLOW MEASURING DEVICES

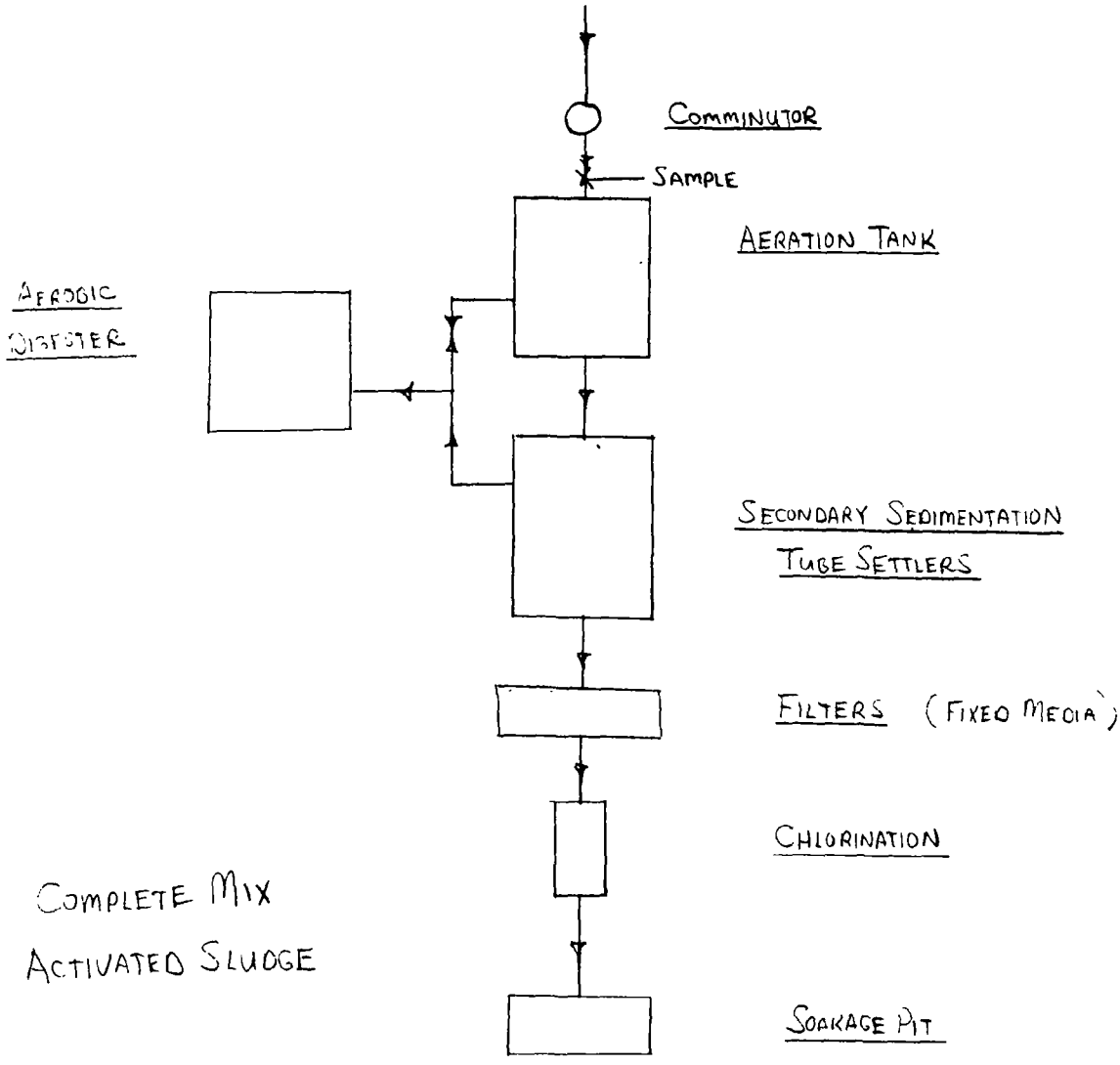

PREPARED BY: KW Schang

LOWER FLORIDA ESTUARY STUDY

Sheet ___ of _____

DADE COUNTY WASTE SOURCE INVENTORY

INFLUENT – EFFLUENT – DATA SUMMARY

PLANT Kwik Chek - Winn Dixie Stores

							AVERAGE
DATE - OFF		12/1/70					
FLOW - MGD		—					
5 DAY B O D mg/l	INFLUENT	>770					
	EFFLUENT	N/S					
	IN - OUT						
	% REMOVAL						
	LOAD-lbs/day	—					
C O D mg/l	INFLUENT	4,218					
	EFFLUENT	NO SAMPLE					
	IN - OUT						
	% REMOVAL						
	LOAD -lbs/day	—					
T S S mg/l	INFLUENT	2488					
	EFFLUENT	NO SAMPLE					
	IN - OUT						
	% REMOVAL						
	LOAD- lbs/day	—					
V S S mg/l	INFLUENT	N.P					
	EFFLUENT	N/S					
	IN - OUT						
	% REMOVAL						
	LOAD --lbs/day	—					
Settlable Solids ml/l	INFLUENT	7.5					
	EFFLUENT	N/S					
	IN - OUT						
	% REMOVAL						
T O C mg/l	INFLUENT	1160					
	EFFLUENT	N/S					
	IN - OUT						
	% REMOVAL						
	LOAD - lbs/day	—					

INFLUENT BOD POPULATION EQUIVALENT = _____

EFFLUENT BOD POPULATION EQUIVALENT = _____

LOAD = FLOW (MGD) x EFFLUENT (mg/l) x 8.34 = lbs/day

From The Desk Of Michael V. Polito

LOWER FLORIDA ESTUARY STUDY
DADE COUNTY WASTE SOURCE INVENTORY
EFFLUENT DATA SUMMARY

Sheet____ of_____

PLANT Knit Chek.

							AVERAGE or MEDIAN*
DATE - OFF		12/1/80					
FLOW - MGD							
KTELDAHL NITROGEN as N	CONC.-mg/l	N/S					
	LOAD-lbs/day	—					
AMMONIA NITROGEN as N	CONC.-mg/l	N/S					
	LOAD-lbs/day	—					
ORGANIC NITROGEN as N	CONC.-mg/l	N/S					
	LOAD-lbs/day	—					
NO_2 -NO_3 as N	CONC.-mg/l	N/S					
	LOAD-lbs/day	—					
TOTAL PHOSPHORUS AS P	CONC.-mg/l	N/S					
	LOAD-lbs/day	—					
CHLORIDE	CONC.-mg/l						
TOTAL COLIFORM	CONC - MPN/100ml						
Fecal COLIFORM	CONC - MPN/100ml						

*Calculate Median for Total & Fecal Coliform Concentrations and Average for All Other Parameters.