FUGITIVE EMISSIONS FROM INTEGRATED IRON AND STEEL PLANTS

R. Bohn, et al

Midwest Research Institute
Kansas City, Missouri

March 1978

U.S. DEPARTMENT OF COMMERCE
National Technical Information Service
NTIS®

EPA-600/2-78-050
March 1978

FUGITIVE EMISSIONS FROM INTEGRATED IRON AND STEEL PLANTS

by

Russel Bohn, Thomas Cuscino Jr.,
and Chatten Cowherd Jr.

Midwest Research Institute
425 Volker Boulevard
Kansas City, Missouri 64110

Contract No. 68-02-2120
ROAP 21AUY-060
Program Element No. 1AB015

EPA Project Officer: Robert V. Hendriks

Industrial Environmental Research Laboratory
Office of Energy, Minerals and Industry
Research Triangle Park, N.C. 27711

Prepared for

U.S. ENVIRONMENTAL PROTECTION AGENCY
Office of Research and Development
Washington, D.C. 20460

RESEARCH REPORTING SERIES

Research reports of the Office of Research and Development, U S Environmental Protection Agency, have been grouped into nine series These nine broad categories were established to facilitate further development and application of environmental technology Elimination of traditional grouping was consciously planned to foster technology transfer and a maximum interface in related fields The nine series are:

1 Environmental Health Effects Research

2. Environmental Protection Technology

3 Ecological Research

4. Environmental Monitoring

5. Socioeconomic Environmental Studies

6. Scientific and Technical Assessment Reports (STAR)

7 Interagency Energy-Environment Research and Development

8. "Special" Reports

9 Miscellaneous Reports

This report has been assigned to the ENVIRONMENTAL PROTECTION TECHNOLOGY series This series describes research performed to develop and demonstrate instrumentation, equipment, and methodology to repair or prevent environmental degradation from point and non-point sources of pollution. This work provides the new or improved technology required for the control and treatment of pollution sources to meet environmental quality standards

EPA REVIEW NOTICE

This report has been reviewed by the U.S. Environmental Protection Agency, and approved for publication. Approval does not signify that the contents necessarily reflect the views and policy of the Agency, nor does mention of trade names or commercial products constitute endorsement or recommendation for use.

This document is available to the public through the National Technical Information Service, Springfield, Virginia 22161

TECHNICAL REPORT DATA
(Please read Instructions on the reverse before com

1. REPORT NO. EPA-600/2-78-050	2.
4. TITLE AND SUBTITLE Fugitive Emissions from Integrated Iron and Steel Plants	5. REPORT DATE March 1978
	6. PERFORMING ORGANIZATION CODE
7. AUTHOR(S) Russel Bohn, Thomas Cuscino Jr., and Chatten Cowherd Jr.	8. PERFORMING ORGANIZATION REPORT NO.
9. PERFORMING ORGANIZATION NAME AND ADDRESS Midwest Research Institute 425 Volker Boulevard Kansas City, Missouri 64110	10. PROGRAM ELEMENT NO. 1AB015; ROAP 21AUY-060
	11. CONTRACT/GRANT NO. 68-02-2120
12. SPONSORING AGENCY NAME AND ADDRESS EPA, Office of Research and Development Industrial Environmental Research Laboratory Research Triangle Park, NC 27711	13. TYPE OF REPORT AND PERIOD COVERED Final; 6/75-6/77
	14. SPONSORING AGENCY CODE EPA/600/13

15. SUPPLEMENTARY NOTES IERL-RTP project officer is Robert V. Hendriks, Mail Drop 62, 919/541-2733.

16. ABSTRACT The report gives results of an engineering investigation of fugitive (non-ducted) emissions in the iron and steel industry. Operations excluded from the study are coke ovens, basic oxygen furnace (BOF) charging, and blast furnace cast houses. Fugitive emission factors for iron and steel sources were compiled from the literature and from contact with industry sources. Field testing of particulate emissions from materials handling operations and from traffic on paved and unpaved roads was utilized to develop improved emission factors for open fugitive emission sources. Ranking fugitive sources on the basis of typically controlled fugitive emissions of fine particulates (< 5 microns in diameter) indicates that electric furnaces, vehicular traffic, BOFs, storage pile activities, and sintering, in decreasing order, are the most important sources of fugitive emissions studied. Substantial progress has been made in developing devices and methods for emission capture and removal. However, major problems exist in retrofitting proposed systems to existing operations. There is also a serious lack of data on uncontrolled emission quantities, control device effectiveness, and control costs.

17. KEY WORDS AND DOCUMENT ANALYSIS

a. DESCRIPTORS		b. IDENTIFIERS/OPEN ENDED TERMS	c. COSATI Field/Group	
Air Pollution	Electric Furnaces	Air Pollution Control	13B	
Iron and Steel Industry	Stockpiles	Stationary Sources	11F	13A
Emission	Sintering	Fugitive Emissions		
Dust		Particulates	11G	
Materials Handling			13H	
Vehicular Traffic				

18. DISTRIBUTION STATEMENT Unlimited	19. SECURITY CLASS (This Report) Unclassified	21.
	20. SECURITY CLASS (This page) Unclassified	22. PRICE A12-A01

EPA Form 2220-1 (9-73)

PB 281 322

REPRODUCED BY NATIONAL TECHNICAL

NOTICE

THIS DOCUMENT HAS BEEN REPRODUCED FROM THE BEST COPY FURNISHED US BY THE SPONSORING AGENCY. ALTHOUGH IT IS RECOGNIZED THAT CERTAIN PORTIONS ARE ILLEGIBLE, IT IS BEING RELEASED IN THE INTEREST OF MAKING AVAILABLE AS MUCH INFORMATION AS POSSIBLE.

PREFACE

This report was prepared for the Environmental Protection Agency to present the results of work performed under Contract No. 68-02-2120. Mr. Robert V. Hendriks served as EPA Project Officer.

The program was conducted in the Environmental and Materials Sciences Division of Midwest Research Institute. Dr. Chatten Cowherd, Head, Air Quality Assessment Section, served as Program Manager. Mr. Russel Bohn and Mr. Thomas Cuscino, Jr., were the principal co-investigators. Ms. Christine Maxwell was responsible for reduction of field testing data.

CONTENTS

Preface ii
Figures vii
Tables ix
Summary xii
Conclusions and Recommendations xv

1.0 Introduction 1-1
2.0 Fugitive Emissions Source Identification 2-1
2.1 Process sources 2-1
2.1.1 Scrap cutting 2-1
2.1.2 Sintering 2-7
2.1.3 Hot metal transfer 2-8
2.1.4 Hot metal desulfurization 2-8
2.1.5 Electric arc furnaces 2-9
2.1.6 Basic oxygen furnaces 2-10
2.1.7 Open hearth furnaces 2-10
2.1.8 Slag quenching 2-11
2.1.9 Teeming 2-11
2.1.10 Scarfing 2-12
2.2 Open dust sources 2-12
2.2.1 Materials handling 2-12
2.2.2 Storage pile activities 2-15
2.2.3 Vehicular traffic 2-17
2.2.4 Wind erosion of exposed areas 2-20
3.0 Fugitive Emissions Quantification 3-1
3.1 Quantification techniques 3-1
3.1.1 Open dust source quantification by upwind/ downwind method 3-3
3.1.2 Open dust source quantification by exposure profiling method 3-4
3.2 Emission factors for process sources 3-7
3.3 Emission factors for open dust sources 3-12
3.3.1 Previously available emission factors 3-12
3.3.2 Source testing results 3-16
3.3.3 Refinement of predictive equations 3-24
3.3.4 Determination of correction parameters . . . 3-39
3.3.5 Best open dust source emission factors . . . 3-41

CONTENTS (continued)

4.0 Open Dust Source Surveys 4-1
4.1 Survey results for Plant A 4-1
4.1.1 Vehicular traffic 4-1
4.1.2 Storage pile activities 4-5
4.1.3 Wind erosion of exposed areas 4-7
4.1.4 Summary of dust emissions 4-9
4.2 Survey results for Plant B 4-9
4.2.1 Vehicular traffic 4-9
4.2.2 Storage pile activities 4-14
4.2.3 Wind erosion of exposed areas 4-16
4.2.4 Summary of dust emissions 4-16
4.3 Survey results for Plant C 4-16
4.3.1 Vehicular traffic 4-20
4.3.2 Storage pile activities 4-22
4.3.3 Wind erosion of exposed areas 4-24
4.3.4 Summary of dust emissions 4-24
4.4 Survey results for Plant D 4-28
4.4.1 Vehicular traffic 4-28
4.4.2 Storage pile activities 4-30
4.4.3 Wind erosion of exposed areas 4-32
4.4.4 Summary of dust emissions 4-34
5.0 Control Technology for Process Sources 5-1
5.1 Electric arc furnaces 5-2
5.1.1 Option A: building evacuation 5-2
5.1.2 Option B: canopy hoods 5-8
5.1.3 Option C: total enclosure 5-11
5.1.4 Option D: tapping ladle hoods 5-14
5.1.5 Option E: the hooded scrap bucket 5-15
5.1.6 Option F: process modifications 5-15
5.2 Basic oxygen furnaces 5-16
5.2.1 Option A: monitor enclosing 5-16
5.2.2 Option B: canopy hoods 5-17
5.2.3 Option C: partial and total enclosures . . . 5-19
5.2.4 Option D: novel uses of the primary hood . . 5-21
5.3 Hot metal transfer 5-22
5.3.1 Option A: close fitting ladle hoods 5-22
5.3.2 Option B: canopy hoods 5-23
5.3.3 Option C: partial building evacuation . . . 5-24
5.4 Teeming 5-25
5.4.1 Option A: local hoods 5-26
5.5 Other sources 5-26

CONTENTS (continued)

5.5.1 Gas cutting operations 5-27
5.5.2 Sintering 5-27
5.5.3 Hot metal desulfurization 5-28
6.0 Control Technology for Open Dust Sources 6-1
6.1 Materials handling 6-2
6.1.1 Option A: enclosures 6-2
6.1.2 Option B: spray systems 6-4
6.2 Storage pile load-in 6-5
6.2.1 Option A: reduce drop distance 6-5
6.2.2 Option B: enclosures 6-7
6.2.3 Option C: spray systems 6-8
6.3 Vehicular traffic around storage piles 6-9
6.4 Wind erosion from storage piles 6-9
6.4.1 Option A: surface stabilization 6-9
6.4.2 Option B: enclosures 6-10
6.5 Storage pile load-out 6-12
6.5.1 Option A: reduce material disturbance . . . 6-12
6.5.2 Option B: spray systems 6-14
6.6 Vehicular traffic on unpaved roads 6-14
6.6.1 Option A: dust suppressants 6-14
6.6.2 Option B: improvement of road surface . . . 6-17
6.7 Vehicular traffic on paved roads 6-18
6.7.1 Option A: sweeping 6-18
6.7.2 Option B: flushing 6-19
6.8 Wind erosion from exposed areas 6-19
6.8.1 Option A: surface stabilization 6-19
6.8.2 Option B: windbreaks 6-20
7.0 Research and Development Recommendations 7-1
7.1 Determination of control needs 7-1
7.1.1 Ranking criteria 7-1
7.1.2 Ranking of control needs 7-8
7.2 Ongoing research 7-8
7.2.1 Process sources 7-8
7.2.2 Open dust sources 7-14
7.3 Additional research needs 7-17
7.3.1 Process sources 7-17
7.3.2 Open dust sources 7-18
7.4 Cost-effectiveness analysis 7-21
7.4.1 Canopy hood system for electric arc furnaces. 7-21
7.4.2 Unpaved road vehicular traffic 7-22
7.4.3 Comparison of cost effectiveness 7-24
7.5 Suggested research programs 7-24
7.5.1 Process sources 7-24

CONTENTS (continued)

7.5.2 Open dust sources 7-28
8.0 References 8-1
9.0 Glossary 9-1
10.0 English to Metric Unit Conversion Table 10-1

Appendices

A. Field testing methodology A-1
B. Testing results and example calculations B-1
C. Stabilization chemicals for open dust sources C-1

FIGURES

Number		Page
2-1	General flow diagram for the iron and steel industry	2-2
2-2	Mass balances--integrated iron and steel industry	2-3
2-3	1976 Iron and steel industry material flows	2-5
2-4	Iron steel raw material storage pile activities	2-13
3-1	Example exposure profiling arrangement	3-6
3-2	MRI exposure profiler	3-20
3-3	Quality assurance (QA) rating scheme for emission factors	3-25
3-4	Predictive emission factor equation for vehicular traffic on unpaved roads	3-26
3-5	Predictive emission factor equation for vehicular traffic on paved roads	3-30
3-6	Predictive emission factor equation for storage pile formations by means of translating conveyor stacker	3-32
3-7	Predictive emission factor equation for transfer of aggregate from front-end loader to truck	3-35
3-8	Predictive emission factor equations for vehicular traffic around storage piles	3-37
3-9	Predictive emission factor equation for wind erosion from storage piles	3-38
3-10	Predictive emission factor equation for wind erosion of exposed areas	3-40
5-1	Building evacuation system	5-4
5-2	EAF canopy hood system	5-9
5-3	BOF canopy hood system	5-18
5-4	BOF total enclosure	5-20
7-1	Flow diagram to determine the need for R&D	7-2
7-2	Steel production as a function of population density	7-7
7-3	BOF and EAF research program structure	7-27
A-1	MRI exposure profiler for line or moving point sources	A-4
A-2	Auxiliary air sampler	A-5
A-3	Example exposure profiling arrangement	A-6
A-4	Positioning of air sampling equipment (top view)--processed slag load-out	A-8
A-5	Positioning of air sampling equipment (rear view)--processed slag load-out	A-9

FIGURES (continued)

Number		Page
A-6	Positioning of air sampling equipment--ore pile stacking	A-10
A-7	Modified MRI exposure profiler--ore pile stacking	A-11
A-8	Positioning of air sampling equipment--unpaved/paved road . . .	A-12
A-9	Sinter plant conveyor transfer station	A-13

TABLES

Number		Page
CR-1	Comparison of Nationwide Stack and Fugitive Emissions	xvi
1-1	Sources of Fugitive Emissions From Integrated Iron and Steel Plants	1-3
2-1	Typical Conversion Factors Utilized for Engineering Estimates of Quantities of Material Handled	2-4
2-2	Fugitive Emission Characteristics	2-6
2-3	1976 Raw Steel Production by Type of Furnace	2-9
2-4	1976 Industry-Wide Production and Receipt of Input Materials	2-15
2-5	Materials Handling Emissions Characteristics	2-16
2-6	Storage Pile Activity Source Extent	2-18
2-7	Storage Pile Activity Emissions Characteristics	2-19
2-8	Vehicular Traffic Source Extent	2-21
2-9	Vehicular Traffic Emissions Characteristics	2-22
2-10	Exposed Area Source Extent	2-24
2-11	Exposed Area Emissions Characteristics	2-24
3-1	Fugitive Particulate Emission Factors for Process Sources	3-8
3-2	Process Fugitive Emission Factors and Their Attainment Methods	3-9
3-3	Available Particle Size Data for Process Sources	3-13
3-4	Selection of Best Emission Factors and Particle Size Data for Process Fugitive Emission Sources	3-14
3-5	Experimentally Determined Fugitive Dust Emission Factors	3-17
3-6	Open Dust Source Emissions Test Parameters	3-21
3-7	Results of Open Dust Source Testing--Vehicular Traffic	3-22
3-8	Results of Open Dust Source Testing--Materials Handling and Storage Pile Activities	3-23
3-9	Predicted Versus Actual Emissions (Unpaved Roads)	3-27
3-10	Predicted Versus Actual Emissions (Light Duty Vehicles on Unpaved Industrial Roads)	3-28
3-11	Estimated Versus Actual Emissions (Paved Roads)	3-31
3-12	Predicted Versus Actual Emissions (Load-In by Stacker)	3-33
3-13	Predicted Versus Actual Emissions (Load-Out by Loader)	3-36
3-14	Selection of Best Emission Factors for Open Dust Sources	3-42
4-1	Fugitive Dust Emission Factors Experimentally Determined by MRI	4-2
4-2	Plant A: Road Emissions	4-3

TABLES (continued)

Number		Page
4-3	Plant A: Storage Pile Emissions	4-6
4-4	Plant A: Storage Pile Correction Parameters	4-8
4-5	Plant A: Exposed Area Emissions	4-10
4-6	Plant A. Summary of Open Dust Source Emissions	4-11
4-7	Plant B: Road Emissions	4-12
4-8	Plant B: Storage Pile Emissions	4-15
4-9	Plant B: Storage Pile Correction Parameters	4-17
4-10	Plant B: Wind Erosion - Open Area Emissions	4-18
4-11	Plant B: Summary of Open Dust Source Emissions	4-19
4-12	Plant C: Road Emissions	4-21
4-13	Plant C: Storage Pile Emissions	4-23
4-14	Plant C: Storage Pile Correction Parameters	4-25
4-15	Plant C: Open Area Emissions	4-26
4-16	Plant C: Summary of Open Dust Source Emissions	4-27
4-17	Plant D: Road Emissions	4-29
4-18	Plant D: Storage Pile Emissions	4-31
4-19	Plant C: Storage Pile Correction Parameters	4-33
4-20	Plant D: Open Area Emissions	4-35
4-21	Plant D. Summary of Open Dust Source Emissions	4-36
5-1	Summary of EAF Controls	5-3
5-2	Estimated Total Installed Costs--Building Evacuation	5-7
5-3	Identification of Example Canopy Hoods Systems on Electric Arc Furnaces	5-10
5-4	Estimated Total Installed Costs--Canopy Hoods	5-12
5-5	Actual Total Installed Costs--Canopy Hoods and Removal System	5-13
6-1	Materials Handling Dust Controls	6-3
6-2	Storage Pile Activity Dust Controls	6-6
6-3	Example Surface Crusting Agents for Storage Piles and Exposed Areas	6-11
6-4	Road Dust Controls	6-16
6-5	Exposed Area Dust Controls	6-21
7-1	Nationwide Emission Rates for Fugitive Emission Sources	7-4
7-2	Fugitive Emission Source Rank on a Nationwide Scale Based on 1976 Production Rates	7-9
7-3	Summary of Ongoing or Recently Completed Research Projects Concerning Process Sources of Fugitive Emissions	7-12
7-4	Summary of Ongoing Research Projects Concerning Open Dust Sources	7-15
7-5	Fugitive Emissions Control Options Recommended for Additional Research	7-19
7-6	Unpaved Roadway Control Cost Effectiveness	7-23

TABLES (continued)

Number		Page
7-7	Cost Effectiveness of Fugitive Emissions Control Methods	7-25
A-1	Field Measurements	A-3
B-1	Emissions Test Parameters--Material Load-Out	B-2
B-2	Plume Sampling Data--Material Load-Out	B-3
B-3	Suspended Particulate Concentration and Exposure Measurements--Material Load-Out	B-5
B-4	Particle Sizing Data Summary--Material Load-Out	B-6
B-5	Corrected Emission Factor Summary--Material Load-Out	B-7
B-6	Example Calculation for Run A1--Slag Load-Out	B-8
B-7	Emissions Test Parameters--Ore Pile Stacking	B-10
B-8	Plume Sampling Data--Ore Pile Stacking	B-11
B-9	Suspended Particulate Concentration and Exposure Measurements--Ore Pile Stacking	B-12
B-10	Particle Sizing Data Summary--Ore Pile Stacking	B-13
B-11	Corrected Emission Factor Summary--Ore Pile Stacking	B-14
B-12	Example Calculation for Run A8--Ore Pile Stacking	B-16
B-13	Emissions Test Parameters--Unpaved Roads	B-18
B-14	Plume Sampling Data--Unpaved Roads	B-19
B-15	Suspended Particulate Concentration and Exposure Measurements--Unpaved Roads	B-20
B-16	Particle Sizing Data Summary--Unpaved Roads	B-21
B-17	Corrected Emission Factor Summary--Unpaved Roads	B-22
B-18	Example Calculation for Run A14--Unpaved and Paved Roads	B-23
B-19	Emissions Test Parameters--Paved Road	B-25
B-20	Plume Sampling Data--Paved Roads	B-26
B-21	Suspended Particulate Concentration and Exposure Measurements--Paved Road	B-27
B-22	Particle Sizing Data Summary--Paved Road	B-28
B-23	Corrected Emission Factor Summary--Paved Road	B-29
B-24	Emissions Test Parameters--Conveyor Transfer	B-31
B-25	Plume Sampling Data--Conveyor Transfer	B-32
B-26	Suspended Particulate Concentration and Exposure Measurements--Conveyor Transfer	B-33
B-27	Particle Sizing Data Summary--Conveyor Transfer	B-34
B-28	Corrected Emission Factor Summary--Conveyor Transfer	B-35
B-29	Example Calculation for Run E10--Conveyor Transfer	B-36

SUMMARY

This report presents the results of an engineering investigation of fugitive emissions in the integrated iron and steel industry. This study was direc to the accomplishment of the following objectives:

1. Identification of fugitive emission sources within integrated iron and steel plants

2. Ranking of identified emissions sources based on relative environmenta impact

3. Recommendations of future research, development and/or demonstration to aid in the reduction of fugitive emissions from the sources determined to be the most critical.

Operations specifically excluded from this study were coke ovens, charging of basic oxygen furnaces, and blast furnace cast houses.

Fugitive emissions in the iron and steel industry can be generally divided into two classes - process fugitive emissions and open dust source fugitive emissions. Process fugitive emissions include uncaptured particulates and gases that are generated by iron and steelmaking furnaces, sinter machines, and metal forming and finishing equipment, and that are discharged to the atmosphere through building ventilation systems. Open dust sources of fugitive emissions include those sources such as raw material storage piles, from which emissions are generated by the forces of wind and machinery acting on exposed aggregate materials.

Quantitative data which characterize process fugitive emissions from integrated iron and steel plants are sparse. A few measurements of process fugitive emissions have been published, but lack of detail on test methods adds uncertainty to the results. In a number of cases, crude estimating techniques have been used to generate fugitive emissions data. To compound the problem, confusion as to the origin of emissions data frequently results from poor documentation.

Prior to this study, little attempt had been made to quantify open dust sources within integrated iron and steel plants. The means used in this study to assess this source category included (a) detailed open dust source surveys

Preceding page blank

of four integrated iron and steel plants and (b) field testing of dust emissions from materials handling operations and from traffic on unpaved and paved roads. The results of this effort indicate that open dust sources contribute substantially to the atmospheric particulate discharged from integrated iron and steel plants.

Prioritization of control needs was determined by ranking of fugitive sources on the basis of typically controlled emissions of fine particulate (smaller than 5 μm in diameter) and suspended particulate (smaller than 30 μm in diameter). Most adverse health and welfare effects of particulate air pollution are attributed to fine particulate, which also has sufficient atmospheric transport potential for regional-scale impact. However, because airborne particles smaller than about 30 μm in diameter (having a typical density of 2.5 g/cm^3) are readily captured by a standard high-volume air samples under normal wind conditions, both the coarse and fine particle fractions of suspended particulate contribute to measured ambient particulate levels.

Ranking of fugitive sources on the basis of typically controlled fugitive emissions of fine particulate and suspended particulate produced the following prioritization of control needs:

Fine Particulates	Suspended Particulates
(1) Electric Arc Furnaces	(1) Vehicular Traffic
(2) Vehicular Traffic	(2) Electric Arc Furnaces
(3) Basic Oxygen Furnaces	(3) Storage Pile Activities
(4) Storage Pile Activities	(4) Sintering
(5) Sintering	(5) Basic Oxygen Furnaces

It is evident from these rankings that open dust sources should occupy a prime position in control strategy development for fugitive emissions.

Analysis of available control technology for process fugitive emission sources indicates the substantial progress has been made in developing devices and methods for emissions capture and removal. However, major problems exist in retrofitting proposed systems to existing operations. This is complicated by the serious lack of data on (a) uncontrolled emission quantities and characteristics, (b) control device effectiveness (particularly relating to capture efficiency) and (c) control costs.

A number of promising control methods are also available for open dust sources. Again, however, little data exist on the effectiveness of these methods, which must be related to the intensity of control application. Although cost data can be derived, costs need to be related to the specific method design which will produce the desired level of control.

Research is recommended to determine the cost-effectiveness of promising control options for both process sources of fugitive emissions and open dust sources. This will allow for rational selection of control methods for further development. Example cost-effectiveness analyses for a process source (canopy hood system for electric arc furnace) and for various open dust sources indicate the control of open dust sources has a substantially more favorable cost-effective ratio.

A major problem hindering the development of control efficiency data is the lack of specified reference methods for the measurement of fugitive emissions. Generalized methods have been proposed, but these methods have not been evaluated for accuracy and precision in relation to specific source conditions. Moreover, practicable measurement method options produce data which are generally not source specific.

A notable exception to this situation is the MRI exposure profiling method. This method was successfully used in this study to measure source specific emission rates and particle size distributions for a number of open dust sources. However, in spite of the demonstrated advantages of exposure profiling over conventional upwind/downwind sampling, the latter technique persists as the backbone of current field oriented research on open dust sources, which is being conducted primarily in other industries.

CONCLUSIONS AND RECOMMENDATIONS

This section presents the major conclusions reached in this investigation and recommendations for reducing negative impacts of these conclusions. In fulfillment of the program objectives, a major effort was put forth to evaluate the need for future research and development programs which would provide fugitive emissions control technology for integrated iron and steel plants. Consequently, the recommendations focus on needed future work.

The emission factors available for fugitive process sources (as presented in Table 3-1 and 3-2) are, for the most part, either derived from testing but not supported by adequate reporting techniques, or are estimates rather than measured values. These inadequacies have produced a range of quantitative uncertainty (as presented in Table 3-4) as large as a factor of 7. The lack of quantified emission factors hinders the reliable assessment of the air quality impact of a proposed or existing steel plant, and the development of rational fugitive emission control strategies.

There are two possible recommendations to deal with the deficiencies in available fugitive emission factors for process sources. The first would entail contacting original investigators and producing a more detailed report on available emission factors. Those factors which were obviously inadequately documented could then be replaced by new, more adequately supported values. The second recommendation would be to use the available factors to estimate a range of impacts. However, this latter strategy would be unacceptable if important decisions hinged on the application of highly uncertain values.

Prior to this study only a few emission factors had been developed for open dust sources. As a result of testing conducted as part of this study, several open dust sources have been quantified, but available data for most sources are still insufficient to develop predictive emission factor equations of acceptable reliability. Consequently, an obvious recommendation is to conduct further tests on major open dust sources such as unpaved roads and storage piles.

Justification for further investigation of open dust sources is presented in Table CR-1, which compares nationwide stack and fugitive emissions for the iron and steel industry. It is important to note that the emission rates presented are approximate. These values are intended to give a relative comparison

Preceding page blank

TABLE CR-1. COMPARISON OF NATIONWIDE STACK AND FUGITIVE EMISSIONS

General source category	Estimated 1976 typically controlled fine particulate emission rates[a]	
	Stack	Fugitive
A. Process sources		
Sintering	58,000 t/yr (52,000 T/yr)	4,700 t/yr (2,500 T/yr)
Hot metal transfer	- -	750 t/yr (830 T/yr)
Electric arc furnace (EAF)	15,000 t/yr (13,000 T/yr)	23,000 t/yr (25,000 T/yr)
Basic oxygen furnace (BOF)	13,000 t/yr (12,000 T/yr)	9,100 t/yr (10,000 T/yr)
Open hearth furnace (OHF)	4,400 t/yr (4,000 T/yr)	1,200 t/yr (1,300 T/yr)
Scarfing	110 t/yr (98 T/yr)	610 t/yr (670 T/yr)
B. Open sources		
Unloading raw materials	-	430 t/yr (470 T/yr)
Conveyor transfer stations	-	790 t/yr (870 T/yr)
Storage pile activities	-	5,200 t/yr (5,700 T/yr)
Vehicular traffic	-	11,500 t/yr) (13,000 T/yr)
Wind erosion of exposed areas	-	480 t/yr (540 T/yr)

a/ t/yr = metric tonnes (2,204 lb) per year; T/yr = short tons (2,000 lb) per year.

of source importance rather than an absolute quantification of emissions from each source.

The major conclusions from Table CR-1 are:

1. Fine particulate emissions from vehicular traffic (13,000 T/year) and storage pile activities (5,700 T/year) rank second and fourth, respectively, in terms of the magnitude of fugitive emissions emitted nationwide from controlled sources.

2. Fine particulate emissions from vehicular traffic are comparable, on an individual basis, to typically controlled stack emissions from EAFs and BOFs.

3. Wind erosion and raw material unloading and conveying are small open dust sources on a nationwide basis. (On a specific plant basis, wind erosion may constitute a considerable portion of the emissions because of dry climate.)

Before further testing of fugitive emission sources proceeds, there exists the need for the specification of standardized methods of measurement. It is recommended that for open dust sources, the relative merits of the available techniques, specifically upwind/downwind sampling and exposure profiling, be evaluated for each source type and that a single technique be detailed as a reference method for each source category. The same recommendations are made for process sources.

The control equipment for the process fugitive sources reviewed in this study already exists and has been applied in isolated cases. However, problems with application of these controls lie in retrofitting control equipment to existing operations. This is complicated by the serious lack of data on (a) uncontrolled emission quantities and characteristics, (b) control device effectiveness (particularly relating to capture efficiency), and (c) control costs.

A number of promising control methods are also available for open dust sources. Again, however, little data exist on the effectiveness of these methods, which must be related to the intensity of control application. Although data can be derived, costs need to be related to the specific method design which will produce the desired level of control.

Research is recommended to determine the cost-effectiveness of promising control options for both process sources of fugitive emissions and open dust sources. This will allow for rational selection of control methods for further development. The results of a cost effectiveness analysis presented in Table 7-7 have shown that watering and road oiling of unpaved roads and broom

and vacuum sweeping of paved roads are at least a factor of twenty times more cost effective than use of canopy hoods in a typical electric arc furnace shop. Cost effectiveness is measured as dollars of annual capital investment and operating cost per pound reduction of fine particulate emissions.

The ranking of fugitive sources, on both a nationwide and a local level, illustrates the importance of control needs for open dust sources. On a nationwide scale, the five highest ranked sources are:

Fine Particulates	Suspended Particulates
(1) Electric arc furnaces	(1) Vehicular traffic
(2) Vehicular traffic	(2) Electric arc furnaces
(3) Basic oxygen furnaces	(3) Storage pile activities
(4) Storage pile activities	(4) Sintering
(5) Sintering	(5) Basic oxygen furnaces

These source emit the largest quantities of fine and suspended particulate, taking into account typically applied control measures.

The importance of vehicular traffic as a major fugitive source of fine and suspended particulate is evident by its first and second place positions under both ranking schemes. On a nationwide basis, there is approximately one-third as much controlled fugitive emissions of fine particles from unpaved roads as from electric arc furnaces, and nearly one-sixth as much controlled fugitive emissions of fine particles from paved roads as from electric arc furnaces. The favorable cost effectiveness ratio of unpaved road controls suggests that they be included in plant fugitive emission control programs.

SECTION 1.0

INTRODUCTION

Until recently, the national effort to control industrial sources of air pollution has focused on emissions discharged from stacks, ducts or flues, and carried to the point of discharge in confined flow streams. Control strategies have been based on the assumption that the primary air quality impact of industrial operations resulted from the discharge of air pollution from conventional ducted sources.

However, failure to achieve the air quality improvements anticipated from the control of ducted emissions has spurred a detailed reexamination of the industrial air pollution problem. Evidence is mounting which indicates that fugitive (nonducted) emissions contribute substantially to the air quality impact of industrial operations and, in certain industries, may swamp the effects of stack emissions.

Iron- and steel-making processes, which are characteristically batch or semicontinuous operations, entail the generation of substantial quantities of fugitive emissions at numerous points in the process cycle. Frequent materials handling steps occur in the storage and preparation of raw materials and in the disposal of process wastes. Additionally, fugitive emissions escape from reactor vessels during charging, process heating and tapping.

Fugitive emissions occurring in the metallurgical process industries constitute a difficult air pollution control problem. Emissions are discharged with a highly fluctuating velocity into large volumes of carrier gases having poorly defined boundaries. Emissions from reactor vessels contain large quantities of fine particulate with smaller amounts of vaporous metals and organics in hot, corrosive gas streams. Enclosures and hooding of fugitive sources, with ducting to conventional control devices, have met with limited success in controlling emissions.

This report presents the results of an engineering investigation of fugitive emissions in the integrated iron and steel industry. This study was directed to the accomplishment of the following objectives:

1. Identification of fugitive emission sources within integrated iron and steel plants.

2. Ranking of identified emission sources based on relative environmental impact.

3. Recommendations of future research, development and/or demonstration to aid in the reduction of fugitive emissions from the sources determined to be the most critical.

Operations specifically excluded from this study were coke ovens, charging of basic oxygen furnaces, and blast furnace cast houses. These sources were being investigated under separate research efforts at the time this study was begun.

Fugitive emissions in the iron and steel industry can be generally divided into two classes - process fugitive emissions and open dust source fugitive emissions. Process fugitive emissions include uncaptured particulates and gases that are generated by steel-making furnaces, sinter machines, and metal forming and finishing equipment, and that are discharged to the atmosphere through building ventilation systems. Open dust sources of fugitive emissions include those sources, such as raw material storage piles, from which emissions are generated by the forces of wind and machinery acting on exposed aggregate materials.

Table 1-1 lists the process sources of fugitive emissions and the open dust sources which are the subject of this study. Although emissions from these sources consist primarily of particulates, gaseous emissions associated with certain operations (such as sulfur dioxide, carbon monoxide, ammonia, hydrocarbons, and nitrogen oxides from coke manufacture and carbon monoxide from blast furnaces, sintering and steel-making furnaces) also can be expected to escape collection and to become fugitive in nature. Nevertheless, this investigation is directed to particulate emissions only, because particulate matter is the prevalent constituent of fugitive emissions discharged from integrated iron and steel plants.

The technical approach used to conduct the subject investigation consisted of the performance of the following seven program tasks.

Task 1 - Identify Fugitive Emission Sources: A comprehensive information collection and data compilation effort was carried out to identify all potentially significant sources of fugitive emissions occurring within integrated iron and steel plants.

Task 2 - Quantify Fugitive Emissions: Available emissions data based on source tests and estimating techniques were used to characterize the types and quantities of fugitive emissions from sources identified in Task 1. MRI's exposure profiling technique was used to field test open dust sources at eastern and western plant sites.

TABLE 1-1. SOURCES OF FUGITIVE EMISSIONS FROM INTEGRATED IRON AND STEEL PLANTS

A. Process Sources

1. Scrap cutting
2. Sintering

   * Windbox leakage
   * Strand discharge
   * Cooling
   * Screening

3. Hot metal transfer
4. Hot metal desulfurization
5. Electric arc furnace

   * Charging
   * Electrode port leakage
   * Tapping
   * Slagging

6. Basic oxygen furnace

   * Deskulling
   * Charging
   * Leakage (furnace mouth, hood sections, and oxygen lance port)
   * Tapping
   * Slagging

7. Open hearth furnace

   * Charging
   * Leakage (doors and oxygen lance port)
   * Tapping
   * Slagging

8. Slag quenching
9. Teeming
10. Scarfing (machine and hand)

B. Open Dust Sources

1. Unloading (rail and/or barge) - raw[a/] materials
2. Conveyor transfer stations - raw and intermediate[b/] materials

(continued)

TABLE 1-1 (continued)

3. Storage pile activities - raw, intermediate, and waste[c/] materials

   * Load-in
   * Vehicular traffic around storage piles
   * Wind erosion of storage piles
   * Load-out

4. Vehicular traffic

   * Unpaved roads
   * Paved roads

5. Wind erosion of bare areas

a/ Raw materials - iron ore, coal, and limestone/dolomite.

b/ Intermediate materials - coke and sinter.

c/ Waste materials - slag and flue dust.

Task 3 - Review Existing Control Technology: Information was collected and analyzed to evaluate the effectiveness of available systems and techniques applicable to the control of process fugitive emissions and open dust sources.

Tasks 4 and 5 - Develop Emissions Classification System and Classify Emissions: A generic classification system was developed and applied to identify the similarities and differences in fugitive emission sources thereby defining generalized control problems which might most effectively be treated in an integral manner.

Task 6 - Determine Critical Control Needs: Using background information developed in previous tasks, the identified fugitive sources were ranked according to the relative environmental benefit of (or need for) emissions control requiring, if necessary, the development and demonstration of effective control techniques.

Task 7 - Recommend Research and Development Programs: Having identified and ranked control needs in Task 6, priority R&D program areas were recommended to address these needs taking into account deficiencies in available control technology and the expected results of research programs already underway.

This report is organized by subject area as follows:

- Section 2 identifies fugitive emission sources within integrated iron and steel plants.
- Section 3 presents data on the quantities of fugitive emissions including the results of the field testing of open dust sources.
- Section 4 presents the results of surveys of open dust sources conducted at four integrated iron and steel plants.
- Section 5 summarizes control technology applicable to process fugitive emissions sources.
- Section 6 summarizes control technology applicable to open dust sources.
- Section 7 presents a ranking of critical control needs and defines priority R&D program areas directed to the development of control technology for fugitive emissions.
- Section 8 lists the references cited in this report.
- Section 9 presents the Glossary of Terms, which defines special terminology used in this report to describe and characterize fugitive emission sources.

A mixture of metric and English units was used in this report. The word ton always refers to short ton (abbreviated "T"), which is equivalent to 2,000 lb. The word tonne always refers to the metric tonne (abbreviated "t"), which is equivalent to 2,200 lb. An English-to-metric conversion table follows Section 9.

SECTION 2.0

FUGITIVE EMISSIONS SOURCE IDENTIFICATION

This section provides a discussion of the various process fugitive emissions sources and open dust sources within the integrated iron and steel industry. These sources are associated with the major processing operations used in producing iron and steel and with the handling of large quantities of raw materials, processed materials, and by-products.

Figure 2-1 gives a process flow diagram for a representative integrated iron and steel plant. Typical process material balances are given in Figure 2-2 and typical material quantity conversion factors are given in Table 2-1. Finally, industry-wide material flows are presented in Figure 2-3.

In the following subsections, the identification and characterization of each fugitive emission source includes: (a) description of the specific operations that generate fugitive emissions, (b) quantification of the source extent, and (c) discussion of the major physical and chemical characteristics of the fugitive emissions streams at the point of discharge.

2.1 PROCESS SOURCES

Presented below is a discussion of each of the specific process fugitive emission sources listed in Table 1-1. The characteristics of fugitive emissions from process sources are summarized in Table 2-2.

2.1.1 Scrap Cutting

Source Description--

Scrap iron and steel is used in the manufacture of steel. Scrap too large for steel furnace charging buckets and machines is cut to a proper size with shears or a torch. Torch cutting of scrap, which is typically performed outdoors, is the source of fugitive emissions considered here.

There are no published data to indicate how many torch operating hours per year are used in the iron and steel industry. It is likely that most of these operating hours are utilized to cut home scrap, rather than purchased scrap.

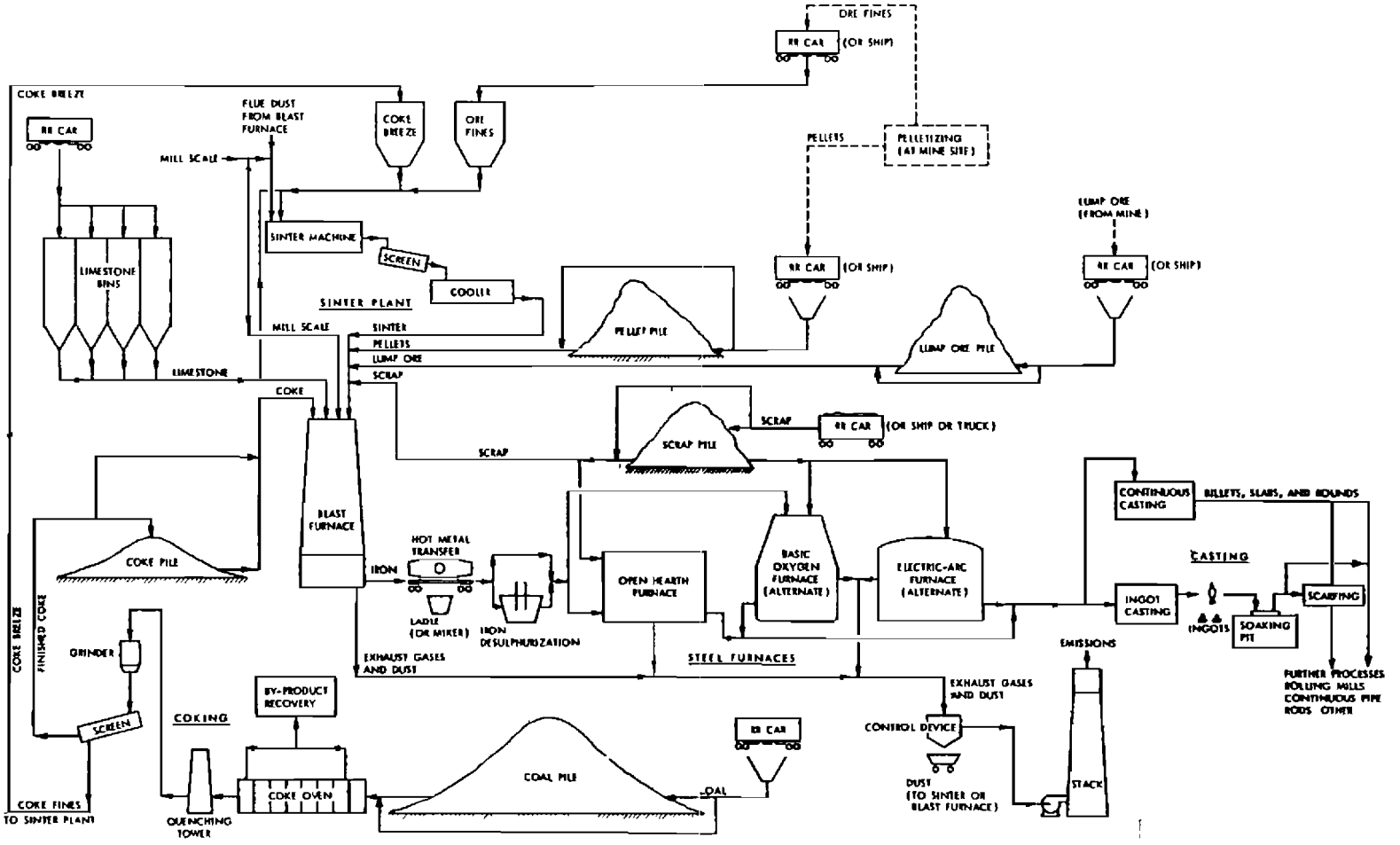

Figure 2-1. General flow diagram for the iron and steel industry.

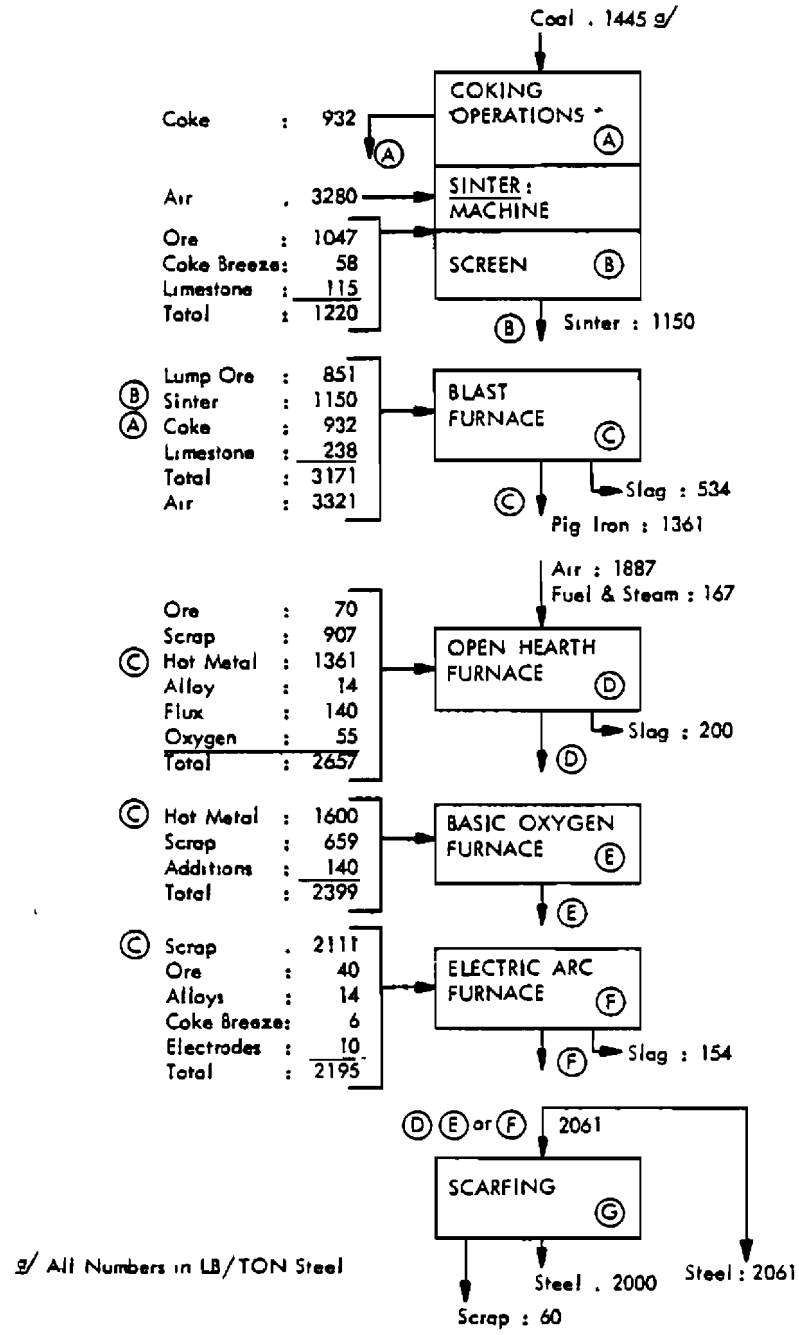

Figure 2-2. Mass balances--integrated iron and steel industry.[1/]

TABLE 2-1. TYPICAL CONVERSION FACTORS UTILIZED FOR ENGINEERING ESTIMATES OF QUANTITIES OF MATERIAL HANDLED

Process	Conversion factor	Reference
Coke manufacture	1.0 unit coal / 0.69 unit coke	
Iron production	0.55 unit coke / 1.0 unit iron	2
	1.55 units of iron bearing material / 1.0 unit iron	2
	0.5 unit sinter / 1.0 unit iron	Average of 5 years of AISI data
	1 0 unit iron ore / 1.0 unit iron	Calculated by difference
	0.2 unit limestone / 1.0 unit iron	2
	0.2 unit slag / 1.0 unit iron	2
	or	
	0.3-0.4 unit slag / 1.0 unit iron	3
	or	
	0.2-0.35 unit slag / 1.0 unit iron	4
BOF steel production	0.7 unit hot metal / 1 0 unit BOF steel	5
	0.3 unit scrap / 1.0 unit BOF steel	
OHF steel production	0.45-0.55 unit hot metal / 1 0 unit OHF steel	
	0.45-0.55 unit scrap / 1 0 unit OHF steel	

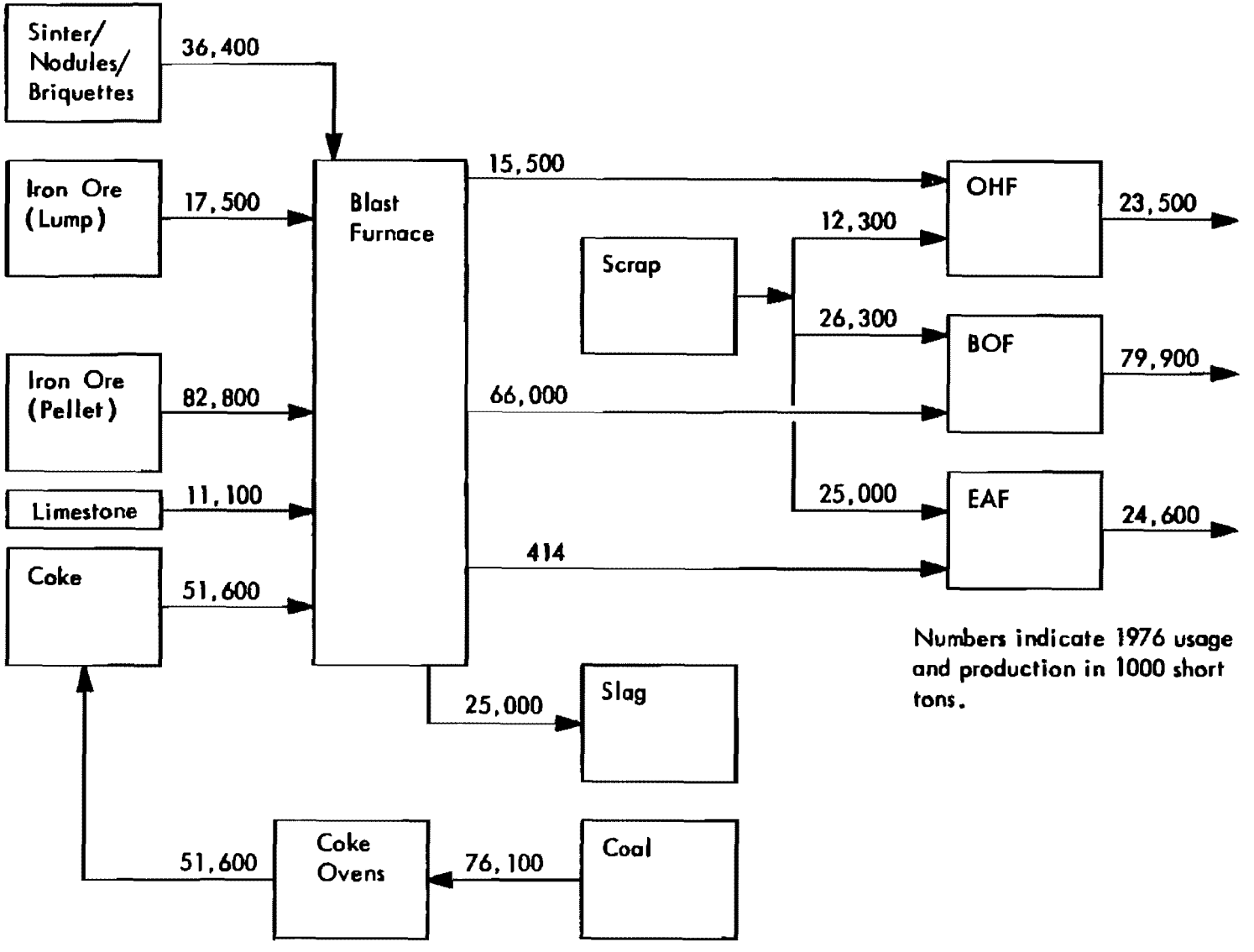

Figure 2-3. 1976 Iron and steel industry material flows.[3,9]

TABLE 2-2. FUGITIVE EMISSION CHARACTERISTICS

Fugitive source	Point of emission exit	Exit temperature (°F)	Exit velocity (fpm)	Exit height (ft)	Weight percentage of fine particles	Possible emission constituents
Sintering	Roof monitor	Ambient-150	250	75	5	FeO, Fe_2O_3, SiO_2, Al_2O_3, CaO, MgO, ZnO
	Cooler	Ambient-150	a/	50	5	
Hot metal transfer	Roof monitor	Ambient-200	a/	120-230	10	C, FeO, Fe_2O_3
Hot metal desulfurization	Roof monitor	a/	a/	a/	a/	C, FeO, Fe_2O_3, CaO, $CaCO_3$, Mg, NaOH, $NaCO_3$
EAF	Roof monitor	Ambient-250	200-560	90-140	70	ZnO, FeO, CaO, Cr_2O_3, MnO, Al_2O_3, SO_3, NiO, PbO, SiO_2, MgO, CuO, P_2O_5
BOF	Roof monitor	150-300	500-3,400	120-230	50	FeO, Fe_2O_3, SiO_2, Al_2O_3, CaO, P_2O_5, Mn_3O_4, MnO, MgO
OHF	Roof monitor	Ambient-150	250	a/	65	Fe_2O_3, FeO, SiO_2, Al_2O_3, CaO, MgO, MnO, ZnO
Scarfing	Roof monitor	a/	a/	a/	90	a/

a/ No measured data available.

Home scrap includes crop ends, skull, spills, rejected semi-finished products, trimmings, and so on. In general, 35% of the raw steel manufactured into finished products will end up as home scrap.[7]

Source Extent--

In 1976, 25 million tons were used in EAFs, 26.3 million tons in BOFs, and 12.3 million tons in OHFs. Home scrap constitutes about 55% of total scrap used by the iron and steel industry, and purchased scrap makes up the remainder.

Emission Characteristics--

The emission characteristics for torch cutting of scrap are assumed to be similar to those from scarfing. The most salient and probably the most important characteristic of scrap cutting emissions is the fine size of the particulate released.

2.1.2 Sintering

Source Description--

As the fused layer of sinter leaves the sinter machine, it drops into the sinter breaker and is passed through a hot screening process. The properly sized material is passed through the cooler which is normally of the induced draft, annular type. Finally, the sinter is transported to the cold screen where the proper size sinter is separated out and sent to the blast furnace.

The process sources of fugitive emissions in sinter plants are: (a) strand discharge, which normally includes the sinter breaker and hot screen, (b) cooler discharge, and (c) the cold screen. MRI feels that since the windbox is under negative operating pressure, windbox leakage is not a source of fugitive emissions.

Source Extent--

As of 1974, there were 36 sintering facilities in existence in the United States, with plant capacities ranging from 2,000 to 6,000 tons of sinter per day.[8] Sinter production in the United States has been on a downward trend for the last 10 years.[6] This trend can be attributed to the depletion of several natural iron ore mines and the necessity to utilize the lower grade taconite ores which are pelletized at the mine site. In 1976, 36,300,000 tons of sinter were produced within the steel industry.[9]

Emissions Characteristics--

As indicated in Table 2-2, particulate emissions from sintering are coarse in comparison with other process fugitive emissions. Only 5% of the sinter plant fugitive emissions are smaller than 5 μm. The composition given in Table 2-2 is actually for windbox emissions, but it is assumed that the

composition of emissions from sources downstream of the windbox is the same, since the sinter undergoes only physical handling and sizing processes.

2.1.3 Hot Metal Transfer

Source Description--

Every BOF shop and most OHF shops have a hot metal transfer station. At these stations, the torpedo car from the blast furnace pours molten iron either into the charging ladle or into a mixer which is subsequently tapped into the charging ladle. It is the violent mixing during these pours that produces iron oxide emissions. Another type of emission produced is kish, which consists of carbonaceous, flake-like particles that leave the molten iron as it begins to cool.

Source Extent--

In 1976, 82,900,000 tons of hot metal were produced within the industry and virtually all of this hot metal was transferred prior to processing.

Emissions Characteristics--

Table 2-2 shows that the fugitive particulate emissions from the hot metal transfer station are coarse in comparison to the other process fugitive emissions. This is due mainly to the fact that the kish, which is much larger in size than the iron oxide particles, is produced in greater weight, thus shifting the combined size distribution toward the coarse end of the spectrum.

2.1.4 Hot Metal Desulfurization

Source Description--

Fugitive emissions are generated by the addition of desulfurizers to hot metal at a position between the blast furnace and the steel-making furnace. Emissions result from (a) agitation of the hot metal as the desulfurizer is added, (b) handling of the desulfurizer, (c) natural rejection of carbon by the hot metal, and (d) skimming of the slag into a pot.

Source Extent--

The percentage of hot metal presently desulfurized between the blast furnace and the steel furnace has not been published.

Emission Characteristics--

Little is known concerning the characteristics of emissions from hot metal desulfurization. One of the constituents is kish, which has been previously described. Another of the constituents is iron oxides arising from the agitation of the hot metal. A third constituent of the emissions is the desulfurizer itself. Some possible desulfurizers are CaC_2, CaO, $NaCO_3$, NaOH, Mg, and $CaCO_3$.

2.1.5 Electric Arc Furnaces

Source Description--

The sources of fugitive emissions from electric arc furnaces are charging, tapping, slagging, and electrode port leakage. Of these four sources, only the first three are of regular occurrence. During scrap charging, the furnace roof is removed and the direct shell evacuation (DSE) system is rendered ineffective. Charging emissions are generated when dirty or oily scrap is dropped into contact with the hot furnace lining. During tapping, the furnace tilts forward, and the emissions occur as the molten steel enters the tapping ladle. During slagging, the furnace tilts back and the emissions occur as the molten slag enters the slag pot. In both tapping and slagging, it is the violent mixing of the molten material that produces the fume.

Emissions during meltdown and refining stages are generally captured by the DSE system. When, for some reason, the draft on the furnace produced by the DSE system is reduced, fumes escape through the electrode ports.

Source Extent--

Electric arc furnaces are increasing in number in the United States. In 1972, there were 299 operating EAFs; and 450 furnaces are projected to be in operation by 1980.[10] In 1976, EAF production consisted of 69% carbon steel, 24% alloy steel, and 7% stainless steel. In terms of total steel production, EAFs produced 15% of carbon steel, 41% of the alloy steel and 100% of the stainless steel for a total of 20% of the entire U.S. steel production (see Table 2-3).[9]

TABLE 2-3. 1976 RAW STEEL PRODUCTION BY TYPE OF FURNACE[9]

Furnace	Production (1,000 tons)	Percentage of total
Electric arc	24,600	20
Open hearth	23,500	18
Basic oxygen	79,900	62
Total	128,000	100

Emission Characteristics--

The major characteristics of EAF fugitive emissions are particle fineness and low degree of plume buoyance. The emissions are cooled rapidly as they travel from the EAF to the building monitor. The composition of the

particles is dominated by iron oxide and zinc oxide, with the latter being prevalent when galvanized scrap is in the charge.

2.1.6 Basic Oxygen Furnaces

Source Description--

The sources of fugitive emissions from basic oxygen furnaces are charging, tapping, slagging, puffing, deskulling, and leakage from the lance port and primary hood. The first three sources occur regularly, but the last three occur infrequently. During charging, tapping, and slagging, the furnace is tilted from underneath the primary hood so that emissions generated in these three positions, unless captured, will rise and leave through the building monitor. Puffing is caused by the production of fume too large in volume for the primary hood to handle. This fume escapes between the mouth of the furnace and the primary hood when the hood is of the open type. When the hood is of the closed or combustion suppression type, puffing is nonexistent. Deskulling emissions are generated during the removal of hardened steel at the mouth of a BOF with a gas cutting lance. Finally, leakage around the lance port and through the openings of a sectionalized primary hood occurs in a few isolated cases. Normally, the negative pressure inside the primary hood prohibits this type of emission.

Source Extent--

BOF steel production has increased dramatically in the last decade in the United States, with BOF shops frequently replacing OHF shops. By 1980, 90 BOF furnaces will be in operation with individual furnace capacities ranging from 75 to 350 tons. In 1976, BOF production consisted of 92% carbon steel and 8% alloy steel. In terms of total steel production, BOFs produced 66% of the carbon steel and 44% of alloy steel for a total of 62% of the total U.S. raw steel production (see Table 2-3).[9]

Emissions Characteristics--

BOF fugitive emissions escape to the atmosphere through the roof monitor. Although there is no standard design for roof monitors, one monitor is known to be 8 x 500 ft and to have an emission stream exit velocity ranging from 500 to 800 fpm. Particulate emissions from the BOF consist mainly of Fe_2O_3. The particle size data available for BOFs are contradictory, with the fraction smaller than 5 μm ranging from 0.06 to 0.90; in Table 2-2, 0.5 has been chosen as an average.

2.1.7 Open Hearth Furnaces

Source Description--

The sources of fugitive emissions from open hearth furnaces are charging, leakage, tapping, and slagging. Charging emissions result from the addition of hot metal or scrap into the hot furnace. Leakage emissions occur as a result

of improperly positioned charging/tapping doors and from oxygen lance-port leakage. Tapping and slagging emissions result from the violent mixing of the poured molten material.

Source Extent--

The increase in new BOF steelmaking capacity in the United States is offsetting the decrease in OHF steelmaking capacity. OHFs accounted for 55% of steel produced in 1967, but by 1976 the percentage of steel produced in OHFs had decreased to 18% (see Table 2-3). Some forecasters have predicted the virtual extinction of the open hearth furnace by 1990.

Emissions Characteristics--

The fugitive emissions characteristics of open hearth furnaces are similar to the other types of steelmaking furnaces.

2.1.8 Slag Quenching

Source Description--

The fugitive emission source considered here is addition of water to blast furnace and steel furnace slag for the purpose of cooling. The fugitive emission of primary concern is gaseous H_2S.

Source Extent--

Calculations show that approximately 25 million tons of blast furnace slag were produced in 1976. The percentage of this slag that was water cooled is unknown.

Emission Characteristics--

Little is known concerning the amount of H_2S produced by slag quenching.

2.1.9 Teeming

Source Description--

The fugitive emission sources of concern in teeming are handling of ladle additions and agitation of molten steel during pouring and ladle additions.

Source Extent--

Nearly all molten steel is either teemed into ingot molds or poured into a tundish feeding continuous casting strands. The amount of steel requiring ladle additions during teeming is unknown.

Emission Characteristics--

No known tests have been performed to characterize teeming emissions.

2.1.10 Scarfing

Source Description--

Prior to rolling mill operations, the billets, blooms and slabs are inspected so that defects potentially detrimental to the finished products may be removed by chipping, grinding, or scarfing. Of these operations, scarfing--either by hand or machine--produces the greater amounts of fugitive emissions. Both scarfing operations employ methods to burn off the outer steel layer. Fugitive emissions occur from leaks from the machine scarfer's control equipment and from open (outdoor) hand scarfing.

Source Extent--

Of the total steel produced, approximately 20 to 50%[11/] is scarfed, mainly by machine scarfing.

Emissions Characteristics--

As indicated in Table 2-2, emissions from steel scarfing consist largely of fine particles, which because of enhanced light scattering potential, may create dense plumes.

2.2 OPEN DUST SOURCES

Fugitive emissions are discharged from a wide variety of open dust sources within an integrated iron and steel plant. Because open dust source emissions heights are usually less than 10 m above the ground, the open dust source impact at the plant boundary and surrounding areas is greater than the impact of the elevated high-temperature process source having the same emission rate. This section gives information on source description, source extent, and emissions characteristics of the following open dust sources: materials handling, storage pile activities, vehicular traffic and wind erosion of exposed areas.

2.2.1 Materials Handling

Source Description--

There are numerous fugitive dust emission points associated with the handling of raw, intermediate and waste materials in the integrated iron and steel industry. This section traces the methods by which these materials are unloaded from barges and railcars and transferred by conveyors.

Figure 2-4 presents a typical flow diagram for materials handling in the iron and steel industry. Raw materials enter an iron and steel plant by barge, rail, and to a lesser extent by truck. Barges are unloaded by clamshell bucket or conveyor bucket-ladder methods. This transfer process yields fugitive dust when the material is dropped onto a nearby storage pile or underground conveyor.

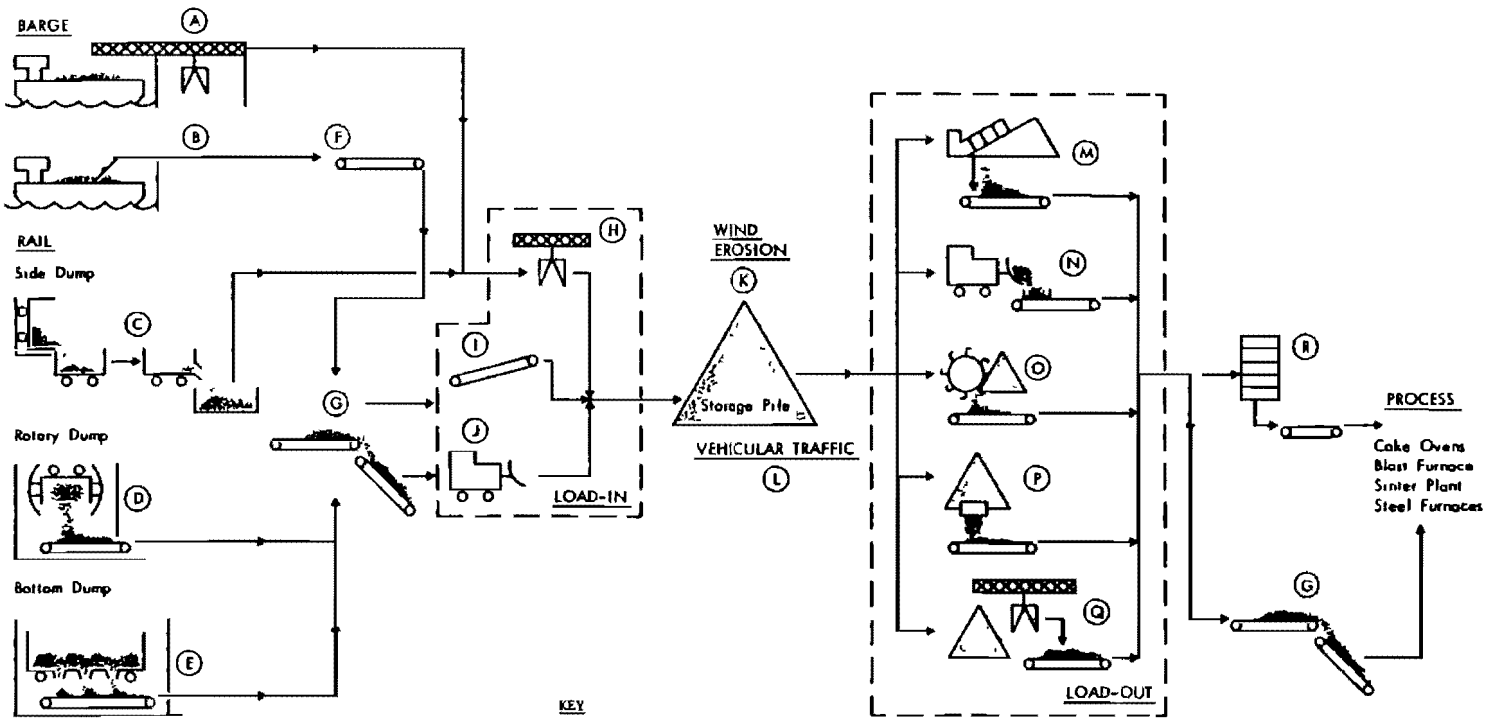

KEY

- Fugitive dust emission point
- Conveyor
- (A) Crane-clamshell bucket transfer from barge
- (B) Barge unloading, bucket-ladder conveyor
- (C) Railcar side dump into motorized side-chute dump car, chute car dump into pit, clamshell bucket removal
- (D) Rotary dump of railcar onto underground conveyor
- (E) Bottom dump of hopper railcar onto underground conveyor
- (F) Conveyor transport
- (G) Conveyor transfer station
- (H) Crane-clamshell bucket drop onto pile
- (I) Mobile or stationary stacker onto pile
- (J) Front-end loader, from surge pile, dump onto pile
- (K) Wind erosion of storage materials
- (L) Front-end loader movements around pile
- (M) Rake reclaimer onto underground conveyor
- (N) Front-end loader dump into conveyor bin
- (O) Bucket wheel reclaimer onto underground conveyor
- (P) Bottom plow feeder to underground conveyor
- (Q) Crane-clamshell bucket transfer to underground conveyor
- (R) Conveyor screening station

Figure 2-4. Iron steel raw material storage pile activities.

Railcars are unloaded at side dump, rotary dump, or bottom-hopper dump stations. The side railcar dump unloading process, which is associated with the ore bridge system, turns the loaded car at almost a 90-degree angle; and the material falls into a special motorized railcar. At a specific location, this car drops the material through side chutes into a pit. The material is picked up by a clamshell bucket and is dropped onto a storage pile. Fugitive dust emission points occur during: (a) railcar side dump, (b) motorized car side chute dump; and (c) dropping of the material from the clamshell bucket onto the pile.

The rotary dump railcar unloading process rotates the railcar 180 degrees with the material falling onto an underground conveyor. The material is moved by conveyor to the storage pile area. Up to this point, fugitive dust emissions occur at the rotary dump station and at conveyor transfer stations.

The bottom dump railcar process utilizes bottom-hopper railcars which drop their contents onto an underground conveyor. The conveyor moves the material to the storage pile area. Fugitive dust emissions points occur at the bottom dump railcar station and at transfer stations along the conveyor route.

The transport and subsequent transfer of materials via conveyor systems are open sources of fugitive dust emissions. Dust emissions attributed to the actual conveyor transport of materials is a relatively insignificant source of emissions. This is due to the configuration of the open conveyor belt, which is U-shaped and shields the material from the forces of wind under average wind speed conditions. During high wind speed conditions, however, wind blown dust emissions can occur during conveyor transport of materials.

Significant fugitive dust emissions occur at conveyor transfer stations. Here the conveyed materials are transferred from one conveyor network to another. The mixing of the exposed free falling aggregate materials and resultant drop onto a conveyor creates noticeable dust emissions.

Fugitive dust emissions result also from the physical sizing of materials at conveyor screening stations. Here materials pass through a series of screens to separate fine and coarse fractions. Certain steelmaking processes such as coking and blast furnaces require materials to be coarse in size; other processes, such as sintering, utilize materials that are fine in size.

Source Extent--

Every integrated iron and steel plant has facilities for the unloading and subsequent conveyor transfer and screening of various materials used or produced in the steelmaking processes. Major raw materials include lump iron ore, iron-bearing pellets, coal, flux materials (limestone, dolomite, etc.) and scrap metal. Major intermediate materials include coke and sinter, while

waste materials include slag and flue dust. Industry-wide usage levels of these major materials in 1976 are presented in Table 2-4.

TABLE 2-4. 1976 INDUSTRY-WIDE PRODUCTION AND RECEIPT OF INPUT MATERIALS[9]

Input material	Production and receipt (10^6 tons)
Lump iron ore	17.5
Iron ore pellets	86.7
Coal	79.1
Coke	60.9
Flux	29.5
Scrap metal	68.3

Published data describing the characteristics of fugitive emissions from materials handling were found to be sparse. Because of this, a conveyor transfer station was included in the source testing phase of this study, to be described in Section 3.3.2 of this report. Table 2-5 presents available information concerning materials handling emissions characteristics.

2.2.2 Storage Pile Activities

Source Description--

The production of finished steel products entails the stockpiling of large amounts of raw, intermediate and waste materials. The majority of these materials remain in storage for periods ranging between 5 to 60 days; however, certain materials, such as waste products, may remain in storage for several years before further usage. Fugitive dust emissions associated with open storage piles result from four source activities: (a) load-in or addition of material to a storage pile; (b) vehicular traffic around storage piles, usually related to maintenance of pile configuration; (c) wind erosion of exposed pile surface; and (d) load-out or removal of material. Figure 2-4 depicts these source activities relative to the previously mentioned materials handling.

In the iron and steel industry, storage pile material load-in is accomplished by: (a) gantry-crane clamshell buckets, (b) conveyors attached to stationary and mobile stackers; and (c) front-end loaders. Fugitive dust

TABLE 2-5. MATERIALS HANDLING EMISSIONS CHARACTERISTICS

Source	Example source material	Injection height	Particle size of total emissions[a/] Weight % Suspended	Fine	Density (g/cm^3)	Composition[b/]
Barge/railcar unloading	Iron ore	Ground level	NA	NA	5.2[b/]	Fe_2O_3, Fe_3O_4, some silica and limestone
Conveyor transfer station	Sinter	Elevated	55	20	3.8[a/]	Iron oxides, calcite, iron-calcium silicates, and quartz
Conveyor screening station	Limestone	Elevated	NA	NA	2.7[b/]	Mostly $CaCO_3$

NA = Not available.

a/ Based on this study's source testing results; Section 3.3.2.

b/ Reference 1, p. C-5.

emissions occur as the material is being dropped onto the storage pile, exposing suspendable dust to ambient air currents.

Vehicular traffic around storage piles, consisting of the movement of front-end loaders, bulldozers, and trucks, generates fugitive dust emissions by traveling over a dust-laden surface, usually consisting of the storage pile material. Contact of the vehicle with the surface causes pulverization of surface material and lifting of suspendable fines into wind currents.

Fugitive dust emissions also result from the wind erosion of storage piles. The threshold erosion wind velocity for this phenomenon is believed to be 12 mph.[12/] Fine particles are injected into the atmosphere mostly as the result of momentum transfer when saltating (bouncing) particles of larger size strike the surface.

The load-out process is also a source of fugitive dust emissions. Methods used for reclaiming storage pile material include: (a) "raking" materials onto underground conveyors; (b) front-end loading and transfer of materials to conveyor bins; (c) mobile "bucket-wheel" reclaiming onto underground conveyors; (d) bottom feed plow of material (underneath the pile) to underground conveyors; and (e) clamshell bucket removal of material to underground conveyors or highline cars. The quantity of fugitive dust emissions realized from these processes is dependent on the relative mechanical force associated with the reclaiming procedures and material silt and moisture.

Source Extent--

Table 2-6 summarizes the data pertaining to the source extent of storage pile activity in the iron and steel industry. Values presented are averages obtained from four open dust surveys which were conducted as part of this study as reported in Section 4.

Emissions Characteristics--

Table 2-7 presents emissions characteristics of the four specific storage pile activities. These data are based largely on the results of source testing conducted as part of this study.

2.2.3 Vehicular Traffic

Source Description--

Motor vehicles are utilized extensively in the integrated iron and steel industry. Employees' vehicles are driven into the plant; light-duty plant vehicles (cars, pickups, vans, etc.) transport employees to and from different plant areas; and trucks of various sizes (5 to 70 tons loaded weight) transport raw and finished materials within and outside the plant. Fugitive dust emissions are generated by these vehicles traveling on unpaved and paved roads.

TABLE 2-6. STORAGE PILE ACTIVITY SOURCE EXTENT
(Average Surveyed Plant)a/

Major stockpiled materials	Amount in storage (tons)	Annual storage throughput (10^6 tons)	Duration of storage (days)	Material silt content (%)	Material moisture content (%)
Coal	70,000	0.7	107	4	6
Lump iron ore	140,000	1.3	48	12	5
Pellets	68,750	1.2	43	11	1
Coke	54,000	0.4	50	1	1
Limestone	20,000	0.1	76	2	2
Processed slag	73,000	0.9	60	2	1

a/ Values shown are averages of the data compiled from this study's four open dust source surveys (see Section 4.0).

TABLE 2-7. STORAGE PILE ACTIVITY EMISSIONS CHARACTERISTICS

Source	Example source material	Injection height	Particle size of total emissions[a/] Weight % Suspended	Fine	Density[a/] (g/cm^3)	Composition[b/]
Load-in	Pellets (stacker)	Elevated	16	5	4.9	Fe_3O_4, Fe_2O_4; some gangue, mostly silica; bentonite
	Iron ore (stacker)	Elevated	16	5	4.5	Fe_2O_3, Fe_3O_4, some silica and limestone
Vehicular traffic around storage piles	-	Ground level	NA	NA	NA	NA
Wind erosion from storage piles	-	Elevated	NA	NA	NA	NA
Load-out	Processed slag (front-end loader)	Elevated	11	3	3	Silicates, silicophosphates, aluminates, borates, ferrites[c/]

NA = Not available.

a/ Based on this study's source testing; Section 3.3.2.

b/ Reference 1, p. C-5.

c/ The Making, Shaping and Freating of Steel, U.S. Steel Corporation, p. 339 (1971).

Unpaved road surfaces produce substantially greater emissions than paved roads with the same traffic. Within an iron and steel plant, unpaved roads are usually surfaced with slag or dirt. These roads may be constructed with a firm roadbed or may consist of trails made by the traveling vehicles. The roads may periodically be maintained by adding graded crushed slag and dirt or may be left to the abuse of vehicles and the weather.

Paved roadways, which predominate in the iron and steel industry, are easier to maintain. However, if the surface dust loading on a paved roadway is allowed to increase, the level of dust emissions may approach that of an unpaved road.

Source Extent--

Data on average vehicle miles traveled on unpaved and paved roads within an integrated iron and steel plant have been compiled from four plant surveys of open dust sources conducted by MRI as part of this study (see Section 4.0). Table 2-8 summarizes the results of the surveys.

Emissions Characteristics--

Table 2-9 presents characteristics of dust emissions generated by vehicular traffic on unpaved and paved roads. These data are based largely on the results of source testing conducted as part of this study.

2.2.4 Wind Erosion of Exposed Areas

Source Description--

Typically within the boundary of an iron and steel plant, there are land areas which are devoid of vegetation and unprotected by building structures. Exposed areas include empty employee parking lots, railroad bed areas, demolished building sites, vacant finished product storage areas, vacant tractor-trailer staging areas, landfill areas, areas between plant buildings and areas left vacant for future plant development. These bare ground areas are susceptible to dust reentrainment induced by the eroding action of the wind. Wind erosion is associated with wind speeds greater than the threshold erosion velocity of 12 mph.[12/]

Although land area may be left bare of vegetation for a variety of reasons, the major controlling factor is the lack of a proper soil medium for vegetative growth. Most iron and steel plants are built on slag-covered areas which do not induce dense vegetative growth. What vegetation may grow is occasionally driven upon by plant vehicles or sprayed with weed-killing compounds to decrease potential fire hazards.

Source Extent--

Data on average acreage of exposed area within an integrated iron and steel plant have been compiled from the four plant surveys of open dust sources

TABLE 2-8. VEHICULAR TRAFFIC SOURCE EXTENT
(Average Surveyed Plant)[a]

Road surface type	Plant road mileage	Miles traveled/day				Vehicle speed (mph)	Paved road surface dust loadings (lb/mile)	Silt content (%) of loose road surface material
		Light duty	Medium duty	Heavy duty	Total			
Unpaved	6.3	285	190	300	775	20	-	9.5
Dusty paved	2.7	139	185	0	324	24	15,000	10.0
Other paved	13.8	521	943	0	1,464	24	5,000	9.0

a/ Based on average of four open dust source surveys (see Section 4.0).

TABLE 2-9. VEHICULAR TRAFFIC EMISSIONS CHARACTERISTICS

Road surface type	Injection height	Weight percentage of suspended particles[a/]	Weight percentage of fine particles[a/]	Density (g/cm^3)	Probable constituents
Unpaved	Height of the rear portion of the vehicle	63	26	3.1	Silica Carbon, $CaCO_3$, Fe_2O_3, Fe_3O_4
Paved	As above	83	44	3.0	As above

a/ Based on source testing performed during this study (See Section 3.0).

which were conducted as part of this study. Table 2-10 summarizes the results of the surveys.

Emissions Characteristics--

Data related to the emissions characteristics of dust resuspended by wind from exposed areas are presented in Table 2-11. It is evident that little is known about this fugitive emission source.

TABLE 2-10. EXPOSED AREA SOURCE EXTENT
(Average Surveyed Plant)[a]

Plant area (acres)	Exposed area (acres)	Unsheltered exposed area (acres)	Surface erodibility (tons/acre-year)	Surface silt content (%)	Annual percentage of time wind speed exceeds 12 mph	Precipitation evaporation index
1,007	158	94	47	16	28	65

a/ Based on average of four open dust surveys (see Section 4.0).

TABLE 2-11. EXPOSED AREA EMISSIONS CHARACTERISTICS

Injection height	Weight percentage of suspended particles	Weight percentage of fine particles	Density (g/cm^3)	Probable constituents
Ground level	NA	NA	NA	$CaCO_3$, SiO_2, FeO, Fe_2O_3

NA Not Available.

SECTION 3.0

FUGITIVE EMISSIONS QUANTIFICATION

This chapter contains a discussion of the emission factors currently available to estimate fugitive emissions in the iron and steel industry. The major measurement and estimation techniques utilized to quantify fugitive emission are delineated. Previously measured or estimated factors and particle size distributions are presented along with a precise literature reference, where possible. The results of field testing of open dust sources are discussed. The recent tests are used to develop or modify predictive emission factor formulas. Finally, the best available emission factors are suggested.

3.1 QUANTIFICATION TECHNIQUES

In large part, proven methods for quantifying fugitive emissions have not been fully developed. Atypical quantification problems are presented by the diffuse and variable nature of fugitive sources. Standard source testing methods, as written, strictly apply only to well defined, constrained flow fields with velocities above about 2 m/sec. Such methods are applicable to fugitive emissions only if it is possible to capture the entire plume by means of an enclosure or hooding device.

There are two general classes of techniques utilized to quantify fugitive emissions: measurement and estimation. For field measurement of fugitive emissions three basic techniques have been suggested[13/] which are summarized as follows:

1. The quasi-stack method involves capturing the entire emissions stream with enclosures or hoods and applying conventional source testing techniques to the confined flow.

2. The roof monitor method involves measurement of concentrations and air flows across well defined building openings such as roof monitors, ceiling vents, and windows.

3. The upwind/downwind method involves measurement of upwind and downwind air quality, utilizing ground-based samplers under known meteorological

conditions and calculation of source strength with atmospheric dispersion equations.

MRI has developed two additional measurement techniques, exposure profiling and dilution profiling,[14] which offer distinct advantages over the above methods for source-specific quantification of fugitive emissions, as discussed below. The exposure profiling method was designed for measurement of open dust source emissions, while the dilution profiling method was designed for quantification of emissions from elevated temperature sources released within a building.

MRI's exposure profiling method involves direct measurement of the total passage of fugitive emissions immediately downwind of the source by means of simultaneous multipoint sampling over the effective cross-section of the fugitive emission plume. Unlike conventional upwind/downwind testing, exposure profiling yields source-specific emission data needed to evaluate the priorities for emission control and the effectiveness of control measures. Moreover, based on MRI field tests of several types of open dust sources, the accuracy of measurements obtained by exposure profiling is better than that achievable by the upwind/downwind method, even with site-specific calibration of the dispersion model used in the latter method.

MRI's dilution profiling method involves multipoint monitoring of temperature over the effective cross-section of a buoyant plume and the use of simultaneous measurements of concentration at selected points to convert plume temperature profiles to concentration profiles. As in the case of exposure profiling, dilution profiling yields the type of source-specific data that would be obtained from quasi-stack testing without the often impractical requirement of enclosing the source. MRI has successfully demonstrated the dilution profiling method on a laboratory scale source.

None of the reported emission factors for fugitive sources in the iron and steel industry have been obtained by the quasi-stack technique. This is because of the high cost associated with enclosing the large sources found in the industry and the production interference caused by even the temporary utilization of such a technique.

The roof monitor technique has been the most widely used to quantify process source emissions, although significant problems are encountered because of the large size of monitor openings and because plume overlap precludes the determination of source-specific contributions.

Several of the available fugitive emission factors for integrated iron and steel plants have resulted from estimation techniques rather than measurement techniques. Estimating techniques include: (a) use of fixed percent of uncontrolled stack emissions; (b) application of data from similar

processes; (c) engineering calculations; and (d) visual correlation of opacity and mass emissions. Wide use of estimating techniques has been employed because of the difficulty of testing and the lack of recognized standardized methods for measuring fugitive emissions.

The most promising and accurate technique for quantifying open dust sources (storage piles, vehicular traffic on unpaved roads, etc.) in the iron and steel industry is exposure profiling. The method is source-specific and its increased accuracy over the upwind/downwind method is a result of the fact that emission factor calculation does not require the use of an atmospheric dispersion model. Exposure profiling is compared with conventional upwind/downwind sampling in the subsections below.

3.1.1 Open Dust Source Quantification by Upwind/Downwind Method

The upwind/downwind method has frequently been used to measure fugitive particulate emissions from open (unconfinable) sources, although only a few studies have been conducted in the integrated iron and steel industry. Typically, particulate concentration samplers (most often high-volume filtration samplers) are positioned at a considerable distance from the source (for example, at the property line around an industrial operation) in order to measure the highest particulate levels to which the public might be exposed. The calculation of the emission rate by dispersion modeling is often treated as having secondary importance, especially because of the difficult problem of identifying the contributions of elements of the mix of open (and possibly confinable) sources.

While the above strategy is useful in characterizing the air quality impact of an open source mix, it has significant limitations with regard to control strategy development. The major limitations are as follows:

1. Overlapping of source plumes precludes the determination of source-specific contributions on the basis of particulate concentration alone.

2. Air samplers with poorly defined intake flow structure (including the conventional high-volume sampler) exhibit diffuse cutoff size characteristics for particle capture, which tend to be affected by wind conditions.[15/]

3. Uncalibrated atmospheric dispersion models introduce the possibility of substantial error (a factor of three[16/]) in the calculated emission rate, even if the stringent requirement of unobstructed dispersion from a simplified source configuration is met.

The first two limitations are not a direct consequence of the upwind/downwind method but of the way it is used. These limitations could be removed by using samplers designed to capture all or a known size fraction of

the atmospheric particulate, and by designing sampler placement to isolate the air quality impact of a well defined source operation.

However, there would remain the need to improve method accuracy by calibration of the dispersion model for the specific conditions of wind, surface roughness, and so on, which influence the near-surface dispersion process. This need is evident from the significant size of the variation in model-calculated emission rates for aggregate process operations, based on data from individual samplers operated simultaneously at different downwind locations.[17] The suggested use of tracers for this purpose is complicated by the characteristically diffuse and variable nature of an open dust source and the need for a polydisperse tracer test dust approximating the particle size distribution of the source emissions.

3.1.2 Open Dust Source Quantification by Exposure Profiling Method

As stated above, the exposure profiling method was developed by MRI[14] to measure particulate emissions from specific open sources, utilizing the isokinetic profiling concept which is the basis for conventional source testing. For measurement on nonbuoyant fugitive emissions, sampling heads are distributed over a vertical network positioned just downwind (usually about 5 m) from the source. Sampling intakes are pointed into the wind and sampling velocity is adjusted to match the local mean wind speed, as monitored by distributed anemometers. A vertical line grid of samplers is sufficient for measurement of emissions from line or moving point sources while a two-dimensional array of samplers is required for quantification of area source emissions.

Grid Size and Sampling Duration--

Sampling heads are distributed over a sufficiently large portion of the plume so that vertical and lateral plume boundaries may be located by spatial extrapolation of exposure measurements. The size limit of area sources for which exposure profiling is practical is determined by the feasibility of erecting sampling towers of sufficient height and number to characterize the plume. This problem is minimized by sampling when the wind direction is parallel to the direction of the minimum dimension of the area source.

The size of the sampling grid needed for exposure profiling of a particular source may be estimated by observation of the visible size of the plume or by calculation of plume dispersion. Grid size adjustments may be required based on the results of preliminary testing.

Particulate sampling heads should be symmetrically distributed over the concentrated portion of the plume containing about 90% of the total mass flux (exposure). For example, if the exposure from a point source is normally

distributed, as shown in Figure 3-1, the exposure values measured by the samplers at the edge of the grid should be about 25% of the centerline exposure.

Sampling time should be long enough to provide sufficient particulate mass and to average over several units of cyclic fluctuation in the emission rate (for example, vehicle passes on an unpaved road). The first condition is easily met because of the proximity of the sampling grid to the source.

Assuming that sample collection media do not overload, the upper limit on sampling time is dictated by the need to sample under conditions of relatively constant wind direction and speed. In the absence of passage of weather fronts through the area, acceptable wind conditions might be anticipated to persist for a period of 1 to 6 hr.

Calculation Procedure--

The passage of airborne particulate, i.e., the quantity of emissions per unit of source activity, can be obtained by spatial integration (over the effective cross-section of the plume) of *distributed measurements of exposure* (mass/area). The exposure is the point value of the flux (mass/area-time) of airborne particulate integrated over the time of measurement. Mathematically stated, the total mass emission rate (R) is given by:

$$R = \frac{1}{t} \iint_A \frac{m(h,w)}{a} \, dh dw$$

where m = dust catch by exposure sampler after subtraction of background

a = intake area of sampler

t = sampling time

h = vertical distance coordinate

w = lateral distance coordinate

A = effective cross-sectional area of plume

In the case of a line source with an emission height near ground level, the mass emission rate per source length unit being sampled is given by:

$$R = \frac{W}{t} \int_0^H \frac{m(h)}{a} \, dh$$

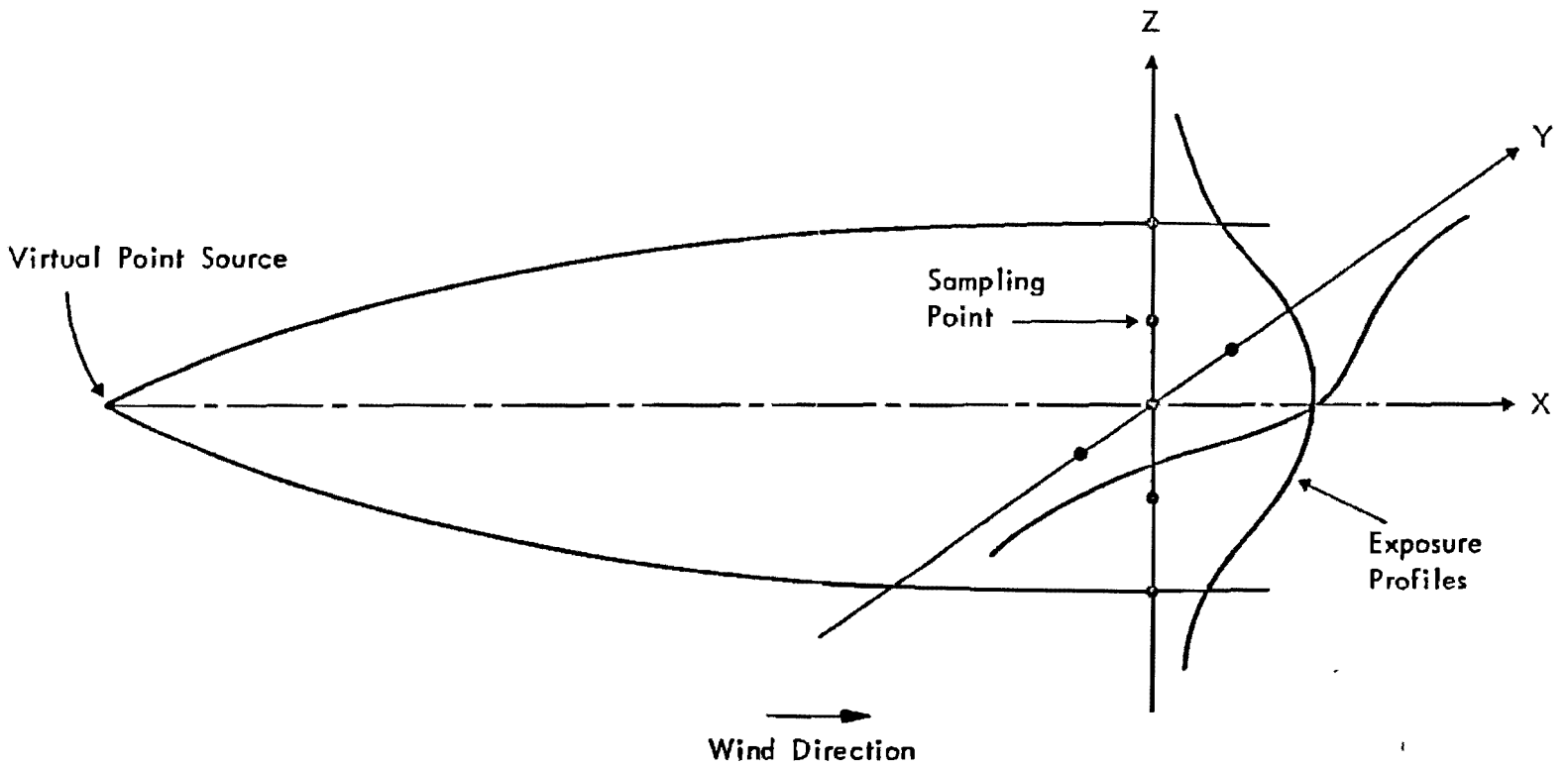

Figure 3-1. Example exposure profiling arrangement.

where W = width of the sampling intake

H = effective extent of the plume above ground

In order to obtain an accurate measurement of airborne particulate exposure, sampling must be conducted isokinetically, i.e., flow streamlines enter the sampler rectilinearly. This means that the sampling intake must be aimed directly into the wind and, to the extent possible, the sampling velocity must equal the local wind speed. The first condition is by far the more critical.

If it is necessary to sample at a nonisokinetic flow rate (for example, to obtain sufficient sample under light wind conditions), multiplicative factors may be used to correct measured exposures to corresponding isokinetic values.[14,18] These corrections require information on the particle size distribution of the emissions.

High-volume cascade impactors with glass fiber impaction substrates, which are commonly used to measure particle size distribution of atmospheric particulate, may be adapted for sizing of fugitive particulate. A cyclone preseparator (or other device) is needed to remove coarse particles which otherwise would be subject to particle bounce within the impactor causing fine particle bias.[18] Once again, the sampling intake should be pointed into the wind and the sampling velocity matched to the mean local wind speed.

Based on replicate exposure profiling of open dust sources under varying conditions of source activity and properties of the emitting surface, emission factor formulae have been derived that successfully predict test results with a maximum error of 20%.[14] These formulae account for the fraction of silt (fines) in the emitting surface, the surface moisture content, and the rate of mechanical energy expended in the process which generates the emissions. Based on the above results, the accuracy of exposure profiling is considerably better than the ± 50% range given for the upwind/downwind method with site-specific dispersion model calibration.[13]

3.2 EMISSION FACTORS FOR PROCESS SOURCES

Table 3-1 presents the available fugitive emission factors for process sources. While the number of available emission factors is large, the number of well-quantified and well-documented factors is limited. If the estimated factors are deleted, the resulting number of measured factors is less than 20 with several sources not yet measured. Table 3-2 shows the method of attainment for each emission factor given in Table 3-1.

For the most part measured fugitive emission factors have not been reported in a rigorous, scientific manner.

TABLE 3-1. FUGITIVE PARTICULATE EMISSION FACTORS FOR PROCESS SOURCES

Source	Units	Measured values	Estimated values: Fixed percent of uncontrolled stack	Estimated values: Extrapolation of data for similar processes	Method unknown
1 Sintering					
. Strand discharge	lb/T sinter		2 2, 0 7		
. Cooler discharge	lb/T sinter	16 8			3 0
. Cold screen	lb/T sinter		0 7		
2 Hot metal transfer	lb/T hot metal	0 056			0 16, 0 2, 0.25
3. Furnace operation					
. EAF	lb/T steel				
Total		1 45, 0.5, 3.7, 28.0, 32.0, 0.9-1.5	1.5-3.0, 3.7		
. BOF	lb/T steel				
Total		0.32, 0 42, 0 88, 1.0, 1.6			1 0
Charging		0.14			0 3-0.4
Tapping		0.29			0.15-0 2
. OHF	lb/T steel				
Total		0 11, 0.168, 0.46-0.6	0.87		
4. Scarfing					
. Machine	lb/T steel		0 005		
Hand	lb/T steel			0 11	

TABLE 3-2. PROCESS FUGITIVE EMISSION FACTORS AND THEIR ATTAINMENT METHODS

Source	Uncontrolled[a] fugitive emission factor	Bibliography reference number	Method of attainment
Sintering			
•Windbox leakage	Negligible		MRI assumption since windbox is under negative pressure
•Strand discharge and breaker	2 2 lb/T sinter	19	MRI estimates 10% of an uncontrolled emission factor of 22.4 lb/T by Schueneman.
	0.7 lb/T sinter	20	MRI estimates 10% of an uncontrolled emission factor measured by AISI.
•Cooling	16.8 lb/T sinter	21	Measurement of uncontrolled emission factor in England. Process description and measurement technique are not adequately defined.
	3.0 lb/T sinter	4	Unknown method of attainment.
•Screens	0.7 lb/T sinter	20	MRI estimates 10% of measured strand discharge emission factor.
Hot metal transfer	0.056 lb/T hot metal	20	Average of eight measurements taken at one plant. Method of sampling not known.
	0.25 lb/T hot metal	22	Estimate - no testing.
	0.2 lb/T hot metal		Estimate - no testing.
	0 16 lb/T hot metal	23	MRI quote from industrial source Sampling methodology unknown
Electric arc furnace			
•All fugitive sources	1.45 lb/T steel	20	Measurement for an alloy steel EAF.
	1.5 lb/T steel	10, 24	Ten percent of EAF background document value for alloy steel.
	3.0 lb/T steel	10, 24	Ten percent of EAF background document value for carbon steel. Authors calculated 30 lb/T as average of published and measured values.

(continued)

TABLE 3-2 (continued)

Source	Uncontrolled[a/] fugitive emission factor	Bibliography reference number	Method of attainment
•All fugitive sources (continued)	0.9-1.5 lb/T steel	-	Canopy hood catch as measured at baghouse.
	3.7 lb/T steel	-	Measured DSE catch at baghouse and assumed it was 89% of total while fugitive emissions were 11%.
	0.5-1.0 lb/T steel	25	Measured roof monitor emissions from EAFs with DSE and canopy hoods (in Sweden).
	1 1-3.7 lb/T steel	25	Measured roof monitor emissions from EAF with just DSE (in Sweden).
	0.9 lb/T steel	25	Measured roof monitor emissions with just canopy hood (in Sweden).
	28-32 lb/T steel	25	Measured roof monitor emissions with no primary or secondary controls (in Sweden).
Basic oxygen furnace			
•Charging	0.3-0.4 lb/T steel	22	Estimate
	0.14 lb/T steel	20	Average of 15 measurements at same plant. Test method unspecified.
•Tapping	0.29 lb/T steel	20	Average of 15 measurements at same plant. Test method unspecified
•All fugitive sources	0.15-0.2 lb/T steel	22	Estimate
	0.32 lb/T steel	20	Average of six measurements at different plants. Test method unspecified.
	1.0 lb/T steel		Estimate
	0.42-0.88 lb/T steel	25	Detailed skylight measurements in BOFs in Sweden for LD process. BOFs have primary hoods. It is not clear if the primary hoods were open or closed type.

(continued)

TABLE 3-2 (continued)

Source	Uncontrolled[a] fugitive emission factor	Bibliography reference number	Method of attainment
•All fugitive sources (continued)	1.0-1.6 lb/T steel	25	Same as above but for Kaldo Process.
Open hearth furnace	0.168 lb/T steel	20	Measurements in roof monitor at one plant Average emission factor for entire cycle for one furnace. Concentration measuring device unknown. Flow rate attained by velocity measurements through given areas of roof monitor.
	0.11 lb/T steel	24	This value quoted by Ontario, Canada, control agency. Method of attainment unknown.
	0.87 lb/T steel	2	Five percent of AP-42 value assuming O_2 lancing. Method of attainment for AP-42 value unknown.
	0.46-0.6 lb/T steel	25	Measured roof monitor values in Sweden for OHFs with primary controls.
Scarfing			
•Machine	0.005 lb/T steel scarfed	20	Five percent of average of nine tests where ducted emissions were measured before control devices Measurement methods unknown in most cases.
•Hand	0.11 lb/T steel scarfed	20	Average of eight tests performed on uncontrolled ducted emissions from machine scarfers.

a/ The cut-off diameter for which the values apply depends on the method of sampling and was not specified in nearly all cases.

In any emissions quantification effort, one should determine beforehand all the variables upon which the emission factor is dependent and then attempt to quantify (or at least qualify) them during the field testing. Unfortunately, many fugitive emission quantification programs, performed in a hurried effort to acquire a value, have neglected to record properly all test conditions, thus rendering the numerical result of limited use.

In addition to recording all pertinent test conditions, it is also important to record the test methodology in detail. The type of equipment used, the flow rate of the mass sampling device, and the number and location of the sampling points are but a few examples of the data that should be recorded. Yet anyone scanning the literature is keenly aware of the distressing lack of rigor in reporting test methodology.

Table 3-3 presents all the known particle size distributions for process sources. It should be noted that tests on similar processes have yielded divergent results, especially in the case of BOF furnaces. Were precise testing methods recorded, this divergence may have been explainable.

Table 3-4 shows MRI selections of the best emission factors and particle size distributions available for each source. It should be cautioned that many of the "best" values require further improvement.

3.3 EMISSION FACTORS FOR OPEN DUST SOURCES

This section presents the rationale used in determining emission factors for open dust sources, as required for the subject investigation. Predictive emission factor equations for open dust sources developed for MRI prior to this project will be presented, along with the modified equations which incorporate the results of the open dust source surveys and open dust source testing performed during this study. Finally, the determination of the best emission factors or predictive equations for open dust sources associated with integrated iron and steel plants will be presented.

3.3.1 Previously Available Emission Factors

In 1972, MRI initiated a field testing program to develop emission factors for four major categories of fugitive dust sources: unpaved roads, agricultural tilling, aggregate storage piles, and heavy construction operations. Prior to that study, little data had been generated for these sources.

Because the emission factors were to be applicable on a national basis, an analysis of the physical principles of fugitive dust generation was performed to ascertain the parameters which would cause emissions to vary from one location to another. These parameters were found to be grouped into three categories:

TABLE 3-3. AVAILABLE PARTICLE SIZE DATA FOR PROCESS SOURCES[a/]

Source	Bibliography reference number	Weight % less than given particle diameter (μm)											
		100	90	80	70	60	50	40	30	20	10	5	1
1. Sintering													
Windbox waste gases (before control)	4	40-89						14-50		6-33	2-19	2-7.5	
	4	40						30		30	12	8	2
	4	55						30		16	8	3	0.5
	26	50											
Cooler	-											10	
2. Hot metal transfer	27	60		50			30				16	10	3
3. EAF													
Primary waste gases (before control)	28							90		85	75	68	
	28							90		86	80	72	
	28							90		85	83	72	
	28							100		98	95	57	
	28							97		89	81	63	
	28							100		97	92	59	
	28							82		67	61	43	
	26											70	
4. BOF													
Noncombusted system	4								87	58	18	9	
Combusted system	4					75		66		56	50	6	
	4							[illegible]		100[b/]			85
5. OHF													
Composite sample	4							94		85	70	48	
	28							90		84	72	65	
Lime-boil sample	4									98	92	75	22
	4												70
6. Scarfing	-											90	

a/ These size distributions are for uncontrolled, ducted emissions. For lack of other data, fugitive emission particle size distributions will be assumed to be identical to ducted emission distributions.

b/ Actually, 100% is less than 15 μm.

TABLE 3-4. SELECTION OF BEST EMISSION FACTORS AND PARTICLE SIZE DATA FOR PROCESS FUGITIVE EMISSION SOURCES

Source	Units	Total emission factor range	Best emission factor	Best estimate of suspended particle percentage	Best estimate of fine particle percentage	Suspended particulate emission factor	Fine particulate emission factor
Sintering							
•Strand discharge (breaker)	lb/T	0.7-2 2	0.7	20	5	0.14	0.035
•Cooler	lb/T	3.0-16.8	3 0	20	5	0 6	0 15
•Cold screen	lb/T	-	0 7	20	5	0 14	0 035
Hot metal transfer	lb/T	0.056-0 25	0.2	20	10	0.04	0 02
EAF							
•All fugitive sources							
•Alloy	lb/T	1 45-1.5	1.45	90	70	1.3	1.0
•Carbon	lb/T	0.5-3 7	3.7	90	70	3.3	2.6
BOF							
•All fugitive sources	lb/T	0.32-1.0	0.49	75	50	0.37	0.25
OHF							
•All fugitive sources	lb/T	0.168-0.87	0.168	95	65	0 16	0.11
Scarfing							
•Machine	lb/T	-	0 005	100	90	0 005	0.0045
•Hand	lb/T	-	0.11	100	90	0.11	0 099

1. Measures of source activity or energy expended (for example, the speed and weight of a vehicle traveling on an unpaved road).

2. Properties of the material being disturbed (for example, the content of silt in the surface material on an unpaved road).

3. Climatic parameters (for example, number of precipitation-free days per year on which emissions tend to be at a maximum).

By constructing the emission factors as mathematical formulas with multiplicative correction terms, the factors become applicable to a range of source conditions limited only by the extent of the program of experimental verification.

The use of the silt content as a measure of the dust generation potential of a material acted on by the forces of wind and/or machinery, was an important step in extending the appicability of the emission factor formulas to the wide variety of aggregate materials of industrial importance. The upper size limit of silt particles (75 μm in diameter) is the smallest particle size for which size analysis by dry sieving is practical, and this particle size is also a reasonable upper limit for particulates which can become airborne. Analysis of atmospheric samples of fugitive dust indicate a consistency in size distribution so that particles in specific size ranges exhibit fairly constant mass ratios.

In order to quantify source-specific emission factors, MRI developed the "exposure profiling" technique, utilizing the isokinetic profiling concept which is the basis for conventional source testing. Exposure profiling consists of the direct measurement of the passage of airborne pollutant immediately downwind of the source by means of simultaneous multipoint sampling over the effective cross-section of the fugitive emissions plume. This technique uses a mass-balance calculation scheme similar to EPA Method 5 stack testing rather than requiring indirect calculation through the application of a generalized atmospheric dispersion model.

Prior to this study, MRI had used the exposure profiling method to develop emissions for the following open dust sources:

1. Light-duty vehicular traffic on unpaved (dirt and gravel) roads.[14/]

2. Agricultural tilling utilizing a one-way disk plow and a sweep-type plow under.[14/]

3. Load-out of crushed limestone utilizing a 2.75 cu yard loader.[14/]

4. Vehicular traffic on paved urban roadways.[18/]

These sources were tested under dry conditions (i.e., day time periods at least 3 days subsequent to a precipitation occurrence) so that worst case emissions could be determined and used as a basis for projecting annual emissions. Additional testing of dust emissions from sand and gravel storage piles was performed utilizing conventional upwind/downwind sampling to relate emissions from aggregate materials handling to approximate emissions from wind erosion and from traffic around storage piles.

Table 3-5 lists the measurements of source extent, the basic emission factor formulae and the correction parameters associated with each pertinent source category. Supporting information for several of these factors is presented in EPA's Emission Factor Handbook (AP-42).[29]

Other than MRI's previous work, few emission factor data for open dust sources exist. Estimated emission factors have been developed for the handling and transfer of storage materials. An uncontrolled emission factor of 0.033 lb/ton coke for coke being dumped into a blast furnace was calculated from a measured blast furnace cyclone catch.[24] This factor might be applicable to a coke conveyor transfer station. AISI[20] estimated an emission factor of 0.13 lb/ton of coke for a conveyor transfer station. Also AISI[20] discovered an emission factor range from the literature of 0.04 to 0.96 lb/ton coal for general coal handling. Speight[21] estimated a value of 1.0 lb/ton for general coal handling.

The factors presented in Table 3-5 describe emissions of particles smaller than 30 μm in diameter, the approximate effective cutoff diameter for capture of fugitive dust by a standard high volume particulate sampler (based on particle density of 2 to 2.5 g/cm^3).[14] Analysis of parameters affecting the atmospheric transport of fugitive dust indicates that approximately 25 to 50% of these emissions (i.e., the portion smaller than 5 μm in size) will be transported over distances greater than a few kilometers from the source.

3.3.2 Source Testing Results

Field testing of open dust sources was performed at two integrated iron and steel plants (designated as Plants A and E) as outlined below:

TABLE 3-5. EXPERIMENTALLY DETERMINED FUGITIVE DUST EMISSION FACTORS

Source category	Measure of extent	Emission factor[a/] (lb/unit of source extent)	Correction parameters
Aggregate storage (sand and gravel; crushed stone)	Tons of aggregate put through storage cycle	$\frac{0.33}{(P\text{-}E/100)^2}$	P-E = Thornthwaites precipitation-evaporation index
Unpaved roads	Vehicle-miles traveled	$0.49\ (s_u)\ \frac{S}{30}\ \frac{d}{365}$	s_u = road surface silt content (%) S = average vehicle speed (mph) d = dry days per year
Paved roads	Vehicle-miles traveled	$91 \times 10^{-5}\ L\ s_p$	L = surface loading on traveled portion of road (lb/mile) s_p = fractional silt content of road surface material
Wind erosion	Acre-years of exposed land	$18\ \frac{esf}{(P\text{-}E/50)^2}$	e = soil erodibility (tons/acre-yr) s = silt content of surface soil (%) f = fraction of time wind exceeds 12 mph P-E = Thornthwaites precipitation-evaporation index

a/ Annual average emissions of dust particles smaller than 30 μm in diameter based on particle density of 2.5 g/cm^3.

Plant A

Fugitive dust source	Number of tests
Load out of high silt processed slag into truck	3
Load out of low silt product slag into truck	3
Mobile stacking of pelletized iron ore	3
Mobile stacking of lump iron ore	3
Light-duty vehicular traffic on unpaved road	1
Heavy-duty vehicular traffic on unpaved road	2

Plant E

Fugitive dust source	Number of tests
Heavy-duty vehicular traffic on unpaved road	3
Light-duty vehicular traffic on unpaved road	3
Plant vehicle mix on paved road	3
Conveyor transfer station (sinter)	3

Criteria used in choosing the above sources for testing included (a) the relative importance of the various open dust sources determined from the plant surveys (Section 4), (b) availability of accurate testing techniques for specific fugitive dust sources configurations, and (c) accessibility of sources for testing within the iron and steel plants.

One of the two plants (Plant A) was located in the western United States, where climatological factors favor fugitive dust generation and the other was situated in the eastern steel-producing section of the country. Presurveys were performed to determine special testing equipment requirements and to familiarize plant personnel with the testing plan. A period of 2 weeks at each plant was allocated for the testing program. Testing was performed only on those days having (a) dry weather, (b) constant wind speed and direction, and (c) sources available for testing.

The primary tool for measuring fugitive dust generated from open dust sources was the MRI Exposure Profiler. An adjustable horizontal cross-arm with attached isokinetic air samplers complemented the vertical sampler mast shown in Figure 3-2. This vertically oriented two-dimensional array of isokinetic air samplers was utilized when testing (a) load out of processed slag into a 35-ton truck via a 10 cu yard front-end loader (six tests), (b) mobile stacking (pile formation/load in) of pelletized and lump iron ore materials (six tests), and (c) the transfer of sinter at a conveyor transfer site. At all times the MRI Exposure Profiler was positioned within 5 m of the source with air samplers covering the effective cross-section of the fugitive dust plume.

Testing of dust emissions from vehicular traffic on unpaved roadways was performed with the MRI Exposure Profiler without the horizontal cross-arm. Twelve tests were performed in this manner with the Exposure Profiler situated at a distance of 5 m from the roadway edge. The vertical line grid of isokinetic air samplers spanned the distance from the ground to the effective height of the fugitive dust plume.

Other equipment utilized in the testing included (a) cascade impactors with cyclone preseparators for particle sizing, (b) high-volume air samplers for determining upwind particulate concentrations, (c) dustfall buckets for determining particulate deposition, and (d) recording wind instruments utilized to determine mean wind speed and direction for adjusting the MRI Exposure Profiler to isokinetic sampling conditions. A detailed presentation of the testing methodology is provided in Appendix A.

The results of the field testing are provided in Tables 3-6 through 3-8. Table 3-6 presents the various emission tests parameters recorded during the actual field testing. Tables 3-7 and 3-8 present the emission factors for suspended particulates (particles smaller than 30 μm in Stokes diameter) and for fine particulates (particles smaller than 5 μm in Stokes diameter), along with surface material and wind speed characteristics.

A further explanation of the source testing results is presented in Appendix B. In order to find emission factors corresponding to particle size cutoffs other than 30 μm and 5 μm, the following steps must be taken utilizing data given in Appendix B:

1. For a given test, construct a straight-line particle size distribution on log-probability graph paper using the values for weight percents smaller than 30 and 5 μm.

2. Determine the value for weight percent smaller than the desired diameter (D_p).

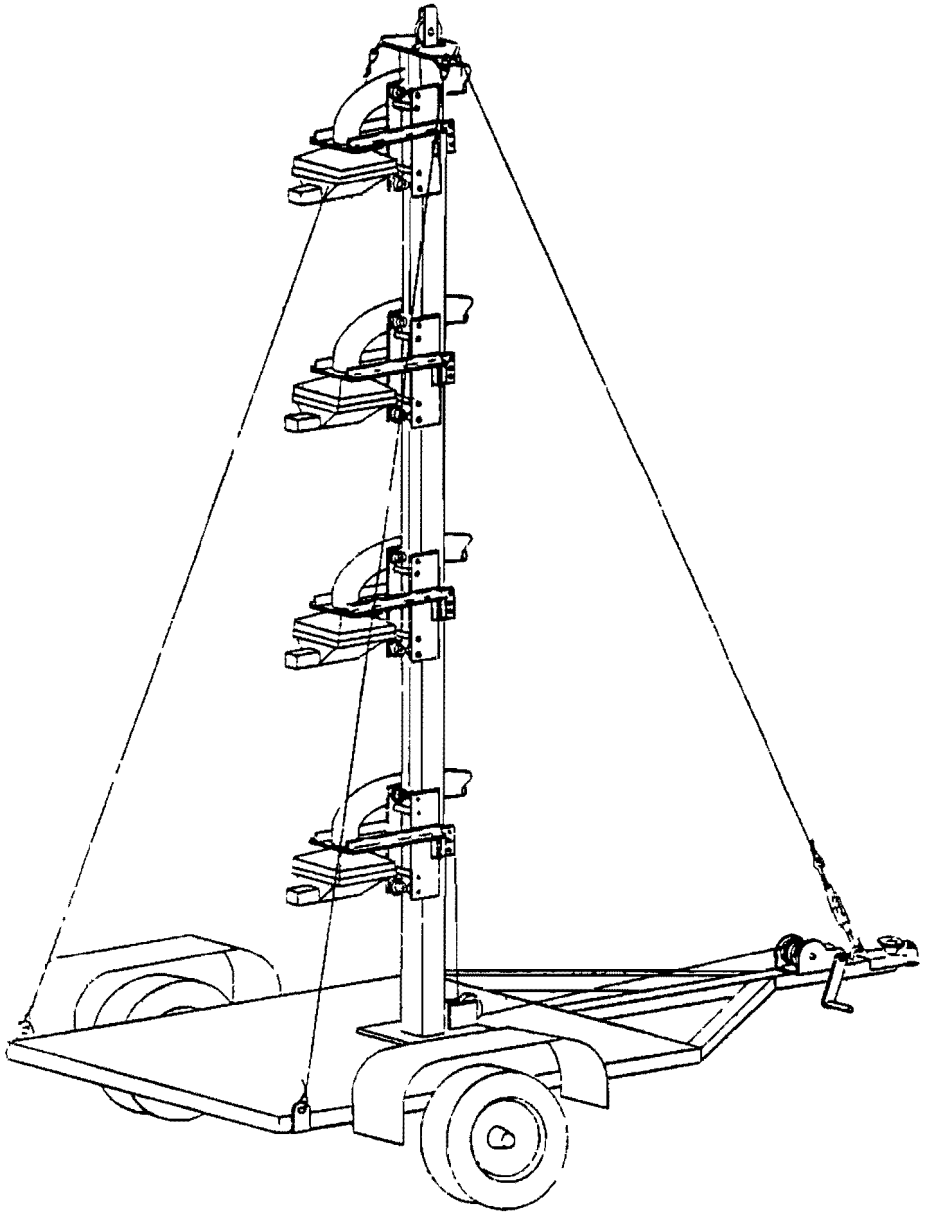

Figure 3-2. MRI exposure profiler.

TABLE 3-6. OPEN DUST SOURCE EMISSIONS TEST PARAMETERS

	Run	Date	Start Time	Exposure Sampling Duration (min)	Source Orientation	Ambient Temperature (°F)	Wind Direction/Speed (mph)	Cloud Cover (%)
A. Slag Load Out (4120 Slag)	A1	4/13/77	1400	30	-	-	S/8	30
	A2	4/15/77	1015	60	-	-	NW/5	40
	A3	4/15/77	1300	30	-	58	NW/9	0
(4133 Slag)	A4	4/15/77	1520	30	-	62	NW/6	0
	A5	4/16/77	0910	40	-	55	NW/3	0
	A6	4/16/77	1130	40	-	61	W/7	0
B. Ore Pile Stacking (Pellets)	A8	4/20/77	1125	30	E-W	-	NNW/5	0
	A9	4/20/77	1330	15	E-W	-	NNW/13	0
	A10	4/20/77	1505	13	E-W	60	NNW/10	0
(Open Hearth Ore)	A11	4/21/77	1137	22	E-W	69	SSE/4	0
(Desert Mound Ore)	A12	4/21/77	1340	25	E-W	-	S/4	30
	A13	4/21/77	1527	28	E-W	-	S/5	0
C. Unpaved Road (Fine Slag Cover)	A7	4/19/77	1110	30	E-W	-	NNW/17	0
	A14	4/22/77	1105	17	N-S	66	W/8	30
	A15	4/22/77	1420	17	N-S	82	W/8	60
(Hard-Base Dirt Cover) Segment 1	E1	6/15/77	1035	30	N-S	74	NE/4	(50)
	E2	6/15/77	1125	55	N-S	(76)	NE/5	50
	E3	6/15/77	1500	18	N-S	79	ENE/9	(50)
Segment 2	E4	6/17/77	0948	12	NW-SE	78	SW/7	Hazy
	E5	6/17/77	1035	13	NW-SE	80	WSW/7	-
	E6	6/17/77	1120	16	NW-SE	(82)	WSW/9	-
D. Paved Road	E7	6/17/77	1510	60	N-S	87	Variable/4	50
	E8	6/20/77	1010	60	N-S	-	SW/3	25
	E9	6/20/77	1332	60	N-S	-	Variable/Light	25
E. Conveyor Transfer	E10	6/21/71	0910	15	E-W to N-S	-	Variable/Calm	25
	E11	6/21/77	1114	15	Conveyor	-	Variable/Calm	25
	E12	6/21/77	1220	15	Transfer Station	-	Variable/Calm	25

TABLE 3-7. RESULTS OF OPEN DUST SOURCE TESTING--VEHICULAR TRAFFIC

	Run	Suspended particulate emission factor lb/vehicle-mile	Suspended particulate emission factor kg/vehicle-km	Fine particulate emission factor lb/vehicle-mile	Fine particulate emission factor kg/vehicle-km	Vehicle passes	Surface material Density (g/cm³)	Surface material Silt (%)	Vehicle speed (mph)	Loaded vehicle weight (tons)
Unpaved road (fine slag cover)	A7	4.9	1.4	1.1	0.37	50 Light duty[a]	3[b]	4.8	30	3
	A14	27	7.7	12	3.4	15 Heavy duty			30	70[c]
	A15	29	8.2	12	3.4	15 Heavy duty			30	70[c]
(hard-base dirt cover) Segment 1	E1	17	4.8	6.6	1.9	16[d]	3.1	8.7	14[e]	34[f]
	E2	16	4.5	5.4	1.5	16[d]			16[e]	34[f]
	E3	19	5.4	7.0	2.0	17[g]			16[e]	23[f]
Segment 2	E4	13	3.7	5.6	1.6	30 Light duty[a]	3.1	4.1	20	3
	E5	11	3.1	5.2	1.5	30 Light duty[h]			20	3
	E6	19	5.4	8.9	2.5	30 Light duty[h]			20	3
Paved road	E7	0.8	0.23	0.44	0.13	127[i]	3.0	5.1	12	7[e]
	E8	1.1	0.31	0.54	0.15	104[i]			12	8[e]

a/ Includes pickup and automobile passes.

b/ Assumed density (Ref CRC Handbook)

c/ 35-Ton vehicle with 35-ton slag load.

d/ Vehicle mix 1 - light duty
6 - medium duty
9 - heavy duty

e/ Average vehicle mix speed.

f/ Average weight of vehicles passing sampler location

g/ Vehicle mix: 6 - light duty
5 - medium duty
6 - heavy duty

h/ Automobile passes only.

i/ Vehicle mix: 101 - light duty
20 - medium duty
6 - heavy duty

j/ Vehicle mix 75 - light duty
23 - medium duty
6 - heavy duty

TABLE 3-8. RESULTS OF OPEN DUST SOURCE TESTING--MATERIALS HANDLING AND STORAGE PILE ACTIVITIES

	Run	Suspended particulate emission factor[a] lb/T	Suspended particulate emission factor[a] kg/t	Fine particulate emission factor[a] lb/T	Fine particulate emission factor[a] kg/t	Material transferred (tons)	Surface material Density (g/cm^3)	Surface material Silt (%)	Surface material Moisture (%)	Wind speed (mph)
Slag load-out (4120 slag)	A1	0.056	0.028	0.017	0.0085	140	3[b]	7.3	0.25	3.6
	A2	0.028	0.014	0.0084	0.0042	140				2.2
	A3	0.059	0.030	0.016	0.008	140				4.2
(4133 slag)	A4	0.030	0.015	0.0093	0.0047	175	3[b]	3.0[c]	0.30	2.7
	A5	0.011	0.0055	0.0032	0.0016	140				1.3
	A6	0.011	0.0055	0.0030	0.0015	175				3.1
Ore pile stacking (pellets)	A8	0.004	0.002	0.0014	0.0007	500	4.9	4.8	0.64	2.3
	A10	0.010	0.005	0.0033	0.0017	210				4.5
(open hearth ore)	A11	0.00099	0.0005	0.00027	0.00014	293	4.5	2.8	0.5[d]	1.8
(desert mound ore)	A12	0.00066	0.00033	0.00021	0.00011	333	4.5	11.9	4.3	1.8
	A13	0.00046	0.00023	0.00013	0.000065	373		19.1		2.2
Conveyor transfer	E10	0.036	0.018	0.012	0.006	52	3.79	0.7	< 1[d]	Calm
	E11	0.064	0.032	0.025	0.013	52				Calm
	E12	0.037	0.019	0.015	0.0075	52				Calm

a/ Emissions per quantity of material transferred.

b/ Assumed density (Ref. CRC Handbook).

c/ Average of MRI and Plant A measurements.

d/ Estimated.

3. Calculate the emission factor for particles smaller than D_p using the following expression:

$$EF_{< D_p} = EF_{< 30\ \mu m} \times \left(\frac{\% < D_p}{\% < 30\ \mu m} \right)$$

3.3.3 Refinement of Predictive Equations

This section presents refined emission factor equations for open dust sources, which have improved predictive capability in comparison to the equations presented in Table 3-5. The precision of the equations is illustrated in tables of testing results and corresponding predicted emissions. Figure 3-3 gives the quality assurance (QA) rating scheme used to evaluate the predictive reliability of the refined emission factor equations. Section 3.3.4 describes methods for determination of correction parameters which appear in the equations.

Vehicular Traffic--

Figure 3-4 shows the predictive emission factor formula for vehicular traffic on unpaved roads. The coefficient and the first two correction terms are identical to the expression given in AP-42[29] as follows:

$$0.6\ (0.81\ s)\ \left(\frac{S}{30}\right)$$

which describes the emissions of particles smaller than 30 μm in Stokes diameter generated by light duty vehicles traveling on unpaved roads. The weight correction term was developed and the previous terms verified on the basis of the testing which was conducted as part of this study.

Table 3-9 compares measured emissions with predicted emissions as calculated from the equation given in Figure 3-4. With the exception of Run E3, the results agree within about ± 20%.

Table 3-10 indicates that for Runs A7, E4, E5, and E6, measured emissions from light duty vehicles were significantly higher than estimated by the formula. The reason for this appears to be that heavy duty vehicles had traveled the test roads prior to sampling, creating a loading of surface silt in excess of the amount found on roads traveled only by light duty vehicles. One way of handling this problem is to use the average vehicle weight for roads traveled by a mix of vehicle types. The effective vehicle weights, given in Table 3-10 were back calculated from the actual emissions.

MRI

QUALITY ASSURANCE RATING SCHEME

A = FORMULATION BASED ON STATISTICALLY REPRESENTATIVE NUMBER OF ACCURATE FIELD MEASUREMENTS (EMISSIONS, METEOROLOGY AND PROCESS DATA) SPANNING EXPECTED PARAMETER RANGES

B = FORMULATION BASED ON LIMITED NUMBER OF ACCURATE FIELD MEASUREMENTS

C = FORMULATION OR SPECIFIC VALUE BASED ON LIMITED NUMBER OF MEASUREMENTS OF UNDETERMINED ACCURACY

— OR —

EXTRAPOLATION OF B-RATED DATA FROM SIMILAR PROCESSES

D = ESTIMATE MADE BY KNOWLEDGEABLE PERSONNEL

E = ASSUMED VALUE

Figure 3-3. Quality assurance (QA) rating scheme for emission factors.

OPEN DUST SOURCE: Vehicular Traffic on Unpaved Roads
QA RATING: B for Dry Conditions
C for Annual Average Conditions

$$EF = 5.9 \left(\frac{s}{12}\right)\left(\frac{S}{30}\right)\left(\frac{W}{3}\right)^{0.8}\left(\frac{d}{365}\right) \text{ lb/veh-mi}$$

Determined by profiling of emissions from light-duty vehicles on gravel and dirt roads under dry conditions.

Estimated factor to account for mitigating effects of precipitation over period of one year.

Determined by profiling of emissions from medium- and heavy-duty vehicles on gravel and dirt roads under dry conditions.

where: EF = suspended particulate emissions (lb/veh-mi)
s = silt content of road surface material (%)
S = average vehicle speed (mph)
W = average vehicle weight (tons)
d = dry days per year

Figure 3-4. Predictive emission factor equation for vehicular traffic on unpaved roads.

TABLE 3-9. PREDICTED VERSUS ACTUAL EMISSIONS (UNPAVED ROADS)

Run	Road surface Type	Road surface Silt (%)	Vehicle speed (mph)	Vehicle weight (tons)	Emission factor[a/] (lb/vehicle-mile) Predicted	Emission factor[a/] (lb/vehicle-mile) Actual	Percent difference	Predicted / Actual
R-1	Gravel	12	30	3	5.9	6.0	-2	0.98
R-2	Gravel	13	30	3	6.4	6.8	-6	0.94
R-2	Gravel	13	40	3	8.5	7.9	8	1.08
R-3	Dirt	20	30	3	9.8	8.1	21	1.21
R-3	Dirt	5	40	3	3.3	3.9	-15	0.85
R-4	Dirt	68	30	3	33	32	3	1 03
A-14	Fine slag	4.8	30	70	29	27	7	1.07
A-15	Fine slag	4.8	30	70	29	29	0	1.00
E-1	Dirt 1	8.7	14	34	14	17	-17	0.82
E-2	Dirt 1	8.7	16	34	16	16	0	1.00
E-3	Dirt 1	8.7	16	23	12	19	-37	0.63

a/ Particles smaller than 30 μm in Stokes diameter based on actual density of silt particles.

TABLE 3-10. PREDICTED VERSUS ACTUAL EMISSIONS
(LIGHT DUTY VEHICLES ON UNPAVED INDUSTRIAL ROADS)

Run	Road surface Type	Road surface Silt (%)	Vehicle speed (mph)	Vehicle weight (tons) Actual	Vehicle weight (tons) Effective	Emission factor[a/] (lb/vehicle-mile) Predicted	Emission factor[a/] (lb/vehicle-mile) Actual	Percent difference	Predicted / Actual
A-7	Fine slag	4.8	30	3	7.5	2.4	4.9	-51	0.49
E-4	Dirt 2	4.1	20	3	54	1.3	13	-90	0.10
E-5	Dirt 2	4.1	20	3	45	1.3	11	-88	0.12
E-6	Dirt 2	4.1	20	3	87	1.3	19	-93	0.07

a/ Particles smaller than 30 μm in Stokes diameter based on actual density of silt particles.

The final term in the emission factor formula given in Figure 3-4 is used to reduce emissions from dry conditions to annual average conditions. The simple assumption is made that emissions are negligible on days with measurable precipitation and are at a maximum on the rest of the days. Obviously neither assumption is defendable alone but there is a reasonable balancing effect. On the one hand, 0.01 in. of rain would have a negligible effect in reducing emissions on an otherwise dry, sunny day. On the other hand, even on dry days, emissions during early morning hours are reduced because of overnight condensation and upward migration of subsurface moisture; and on cloudy, humid days, road surface material tends to retain moisture. Further natural mitigation occurs because of snowcover and frozen surface conditions. In any case, further experimentation is needed to verify and/or refine this factor.

Figure 3-5 shows the predictive emission factor formula for vehicular traffic on paved roads. As indicated, the coefficient and the first two correction terms were determined by field testing of emissions from traffic (consisting primarily of light duty vehicles) on arterial roadways and on a test strip that was artifically loaded with surface dust in excess of normal levels. The vehicle weight correction term was added by analogy to the experimentally determined factor for unpaved roadways, and more testing is needed to confirm the validity of this correction term.

Table 3-11 compares measured emissions with predicted emissions as calculated from the equation given in Figure 3-5. Although measured emissions from medium duty and heavy duty vehicles traveling on a paved roadway at Plant E were substantially in excess of the predicted levels, this is thought to be due to resuspension of dust from vehicle underbodies. This phenomenon was visually evident as the heavy duty vehicles traveled from an unpaved area onto the paved roadway.

It should be noted that the emission factor for reentrained dust from paved roadways contains no correction term for precipitation. Although emissions from wet pavement are reduced, increased carryover of surface material by vehicles occurs during wet periods, and emissions reach a maximum when the pavement dries. More testing would be helpful in analyzing the net effects of precipitation on reentrained dust emissions.

Storage Pile Activities--

Figure 3-6 gives the predictive emission factor formula for storage pile formation (load-in) by means of a translating conveyor stacker. The equation is based on the results of field testing of emissions from the stacking of pelletized and lump iron ore at Plant A. The effect of wind speed on emissions occurs presumably because of the increased atmospheric exposure of suspendable particles during the drop from the stacker to the pile. Table 3-12 compares measured emissions with predicted emissions as calculated from the predictive equation.

OPEN DUST SOURCE: Vehicular Traffic on Paved Roads
QA RATING: B for Normal Urban Traffic
C for Industrial Plant Traffic*

$$EF = 0.45 \left(\frac{s}{10}\right)\left(\frac{L}{5000}\right)\left(\frac{W}{3}\right)^{0.8} \text{ lb/veh-mi}$$

Determined by profiling of emissions from traffic (mostly light-duty) on arterial roadways with values for s and L assumed.

Assumed by analogy to experimentally determined factor for unpaved roads.

*Tests of industrial plant traffic yielded higher than predicted emissions, presumably due to resuspension of dust from vehicle underbodies.

Determined by profiling of emissions from light-duty vehicles on roadway which was artificially loaded with known quantities of gravel fines and pulverized topsoil.

where: EF = suspended particulate emissions (lb/veh-mi)
s = silt content of road surface material (%)
S = average vehicle speed (mph)
W = average vehicle weight (tons)
L = surface dust loading on traveled portion of road (lb/mile)

Figure 3-5. Predictive emission factor equation for vehicular traffic on paved roads.

TABLE 3-11. ESTIMATED VERSUS ACTUAL EMISSIONS (PAVED ROADS)

Run	Road surface dust: Type	Road surface dust: Loading excluding curbs[a] (lb/mile)	Road surface dust: Silt (%)	Vehicle weight (tons)	Emission factors[a] (lb/vehicle-mile): Predicted	Emission factors[a] (lb/vehicle-mile): Actual	Percent difference	Predicted/Actual
P-9	Pulverized topsoil[b]	7,060	45	3	2.9	3.7	-22	0.78
P-10		2,870	92	3	2.4	2.1	14	1.14
P-14	Gravel[b]	6,700	23	3	1.4	0.46	204	3.04
E-7	(Iron and steel)	800	5.1	7	0.072	0.8	-91	0.09
E-8	Plant E	800	5.1	8	0.080	1.1	-93	0.07
P-356	Urban arterial site 1[c]	16.0	16.0	3	0.014	0.015	-6	0.93
P-1516	Urban arterial site 2[c]	14.9	14.9	3	0.013	0.013	0	1.00

a/ Particles smaller than 30 μm in Stokes diameter based on actual density of silt particles.

b/ 4-Lane test roadway artificially loaded.

c/ 4-Lane roadway with traffic count of about 10,000 vehicles/day, mostly light duty.

OPEN DUST SOURCE: Storage Pile Formation by Means of Translating Conveyor Stacker

QA RATING: B

$$EF = \underbrace{0.0018 \frac{\left(\frac{s}{5}\right)\left(\frac{U}{5}\right)}{\left(\frac{M}{2}\right)^2}}_{\text{Determined by profiling of emissions from pile stacking of pelletized and lump iron ore.}} \text{ lb/ton}$$

where: EF = suspended particulate emissions (lb/ton of material transferred)
s = silt content of aggregate (%)
M = moisture content of aggregate (%)
U = mean wind speed (mph)

Figure 3-6. Predictive emission factor equation for storage pile formations by means of translating conveyor stacker.

TABLE 3-12. PREDICTED VERSUS ACTUAL EMISSIONS (LOAD-IN BY STACKER)

Run	Aggregate Type	Aggregate Silt (%)	Aggregate Moisture (%)	Wind speed (mph)	Emission factor[a/] (lb/ton) Predicted	Emission factor[a/] (lb/ton) Actual	Percent difference	Predicted / Actual
A-8	Iron ore pellets	4.8	0.64	2.3	0.0078	0.0040	95	1.95
A-10	Iron ore pellets	4.8	0.64	4.5	0.015	0.010	50	1.50
A-11	Lump iron ore	2.8	2.0[b/]	1.8	0.00036	0.00099	-64	0.36
A-12	Lump iron ore	11.9	4.3	1.8	0.00033	0.00066	-50	0.50
A-13	Lump iron ore	19.1	4.3	2.2	0.00065	0.00046	41	1.41

a/ Particles smaller than 30 μm in Stokes diameter based on actual density of silt particles.

b/ Estimated value.

Note that emissions from Tests A11 and A12 are significantly greater than predicted during the early stages of pile formation. This is thought to be due to the increased atmospheric exposure of falling material resulting from increased drop distance during the early stages of pile formation. The same effect is not observed in the case of pellets (an artificial aggregate) possibly because emissions appear to be concentrated at the drop end of the stacker and from the pile surface as pellets bounce and roll. The possible effect of drop distance and dust emission should be further quantified by field testing.

Figure 3-7 gives the predictive emission factor formula for transfer (load-out) of aggregate from a loader to a truck. The equation is based primarily on field testing of emissions from the transfer of crushed slag at Plant A. It has the same form as the predictive equation for storage pile stacking, except for the addition of a term containing the bucket size of the loader. This term was derived by comparing the results for the 10 cu yard loader with results obtained several years ago for load-out of crushed limestone with a 2.75 cu yard loader. Table 3-13 compares measured emissions with emissions calculated from the predictive equation.

Figure 3-8 presents the emission factor formula for dust emissions from vehicular traffic around storage piles. The coefficient in this equation was determined from conventional upwind/downwind sampling of total emissions from a sand and gravel storage pile area during periods of activity (load-in, load-out, traffic) and periods of inactivity (wind erosion only). The first two correction terms were added by analogy to experimentally determine factors for other sources. The climatic factor assumes, as in the case of unpaved roads, that emissions occur only on dry days; the value of 235 dry days was obtained by extending to an annual period the frequency of measurable precipitation which was observed during the 30-day test period.[14/] Because of the potential inaccuracies of the sampling methodology and the number of assumptions used in deriving the correction terms, this predictive emission formula is assigned a relatively low quality assurance rating.

Figure 3-9 presents the emission factor formula for dust emissions generated by wind erosion of storage piles. The coefficient in the equation was determined from testing inactive sand and gravel storage piles, as noted above. The factor of 0.11 lb/ton (i.e., 33% of 0.33 lb/ton) was cut in half to adjust for the estimate that the average wind speed through the emission layer was one-half of the value measured above the top of the piles. The other terms in the equation were added to correct for silt, precipitation and frequency of high winds. For the reasons given above with respect to the factor for traffic, this predictive equation requires substantial additional testing to increase its QA rating to an acceptable level.

OPEN DUST SOURCE: Transfer of Aggregate from Loader to Truck
QA RATING: B

$$EF = 0.0018 \underbrace{\frac{\left(\frac{s}{5}\right)\left(\frac{U}{5}\right)}{\left(\frac{M}{2}\right)^2\left(\frac{Y}{6}\right)}}_{\text{Determined by profiling of emissions from load-out of crushed steel slag and crushed limestone.}} \text{ lb/ton}$$

where: EF = suspended particulate emissions (lb/ton of material transferred)
s = silt content of aggregate (%)
M = moisture content of aggregate (%)
U = mean wind speed (mph)
Y = effective loader capacity (yd^3)

Figure 3-7. Predictive emission factor equation for transfer of aggregate from front-end loader to truck.

TABLE 3-13. PREDICTED VERSUS ACTUAL EMISSIONS (LOAD-OUT BY LOADER)

Run	Aggregate Type	Aggregate Silt (%)	Aggregate Moisture (%)	Wind speed (mph)	Loader capacity (yd^3)	Emission factor[a/] (lb/ton) Predicted	Emission factor[a/] (lb/ton) Actual	Percent difference	Predicted / Actual
A-1	Processed steel slag	7.3	0.25	3.6	10	0.073	0.056	30	1.30
A-2		7.3	0.25	2.2	10	0.045	0.028	61	1.61
A-3		7.3	0.25	4.2	10	0.085	0.059	44	1.44
A-4		3.0	0.30	2.7	10	0.016	0.030	-47	0.53
A-5		3.0	0.30	1.3	10	0.0075	0.011	-32	0.68
A-6		3.0	0.30	3.1	10	0.018	0.011	64	1.64
L-1	Crushed limestone	1.3	0.70[b/]	13	2	0.030	0.053	-43	0.57
L-2		1.9	0.70[b/]	14	2	0.047	0.063	-25	0.75

a/ Particles smaller than 30 μm in Stokes diameter based on actual density of silt particles.

b/ Average of values obtained for both materials tested.

OPEN DUST SOURCE: Vehicular Traffic Around Storage Piles
QA RATING: C

$$EF = 0.10\ K \left(\frac{s}{1.5}\right)\left(\frac{d}{235}\right) \text{ lb/ton}$$

Estimated factors to correct measured emissions to other source conditions.

Determined by difference, i.e. subtraction of load-in/load-out emissions and wind erosion emissions from total emissions based on upwind/downwind sampling around sand and gravel storage piles.

where: EF = suspended particulate emissions (lb/ton of material put through storage cycle)
K = activity factor defined as unity for operation tested
s = silt content of aggregate (%)
d = dry days per year

Figure 3-8. Predictive emission factor equations for vehicular traffic around storage piles.

OPEN DUST SOURCE: Wind Erosion from Storage Piles
QA RATING: C

$$EF = 0.05 \left(\frac{s}{1.5}\right)\left(\frac{D}{90}\right)\left(\frac{d}{235}\right)\left(\frac{f}{15}\right) \text{ lb/ton}$$

Based on upwind/downwind sampling of emissions from inactive storage piles of sand and gravel.

Estimated factors to correct measured emissions to other source conditions.

where: EF = suspended particulate emissions (lb/ton of material put through storage cycle)
s = silt content of aggregate (%)
D = duration of storage (days)
d = dry days per year
f = percentage of time wind speed exceeds 12 mph

Figure 3-9. Predictive emission factor equation for wind erosion from storage piles.

Wind Erosion of Exposed Areas--

Figure 3-10 presents the emission factor formula for wind erosion from exposed areas. As indicated, this equation was derived (a) from field testing of suspended dust generation during dust storms, as reported by Gillette,[30] and (b) by an analogy to the wind erosion equation, which predicts total erosion rather than suspended dust generation. Although it is known that above the wind speed threshold of 12 mph for wind erosion, the erosion rate increases with the cube of the wind speed, the wind speed correction term was simplified to reflect an average value of 15 mph for periods of erosion. Because of the number of assumptions made in deriving this equation, more testing is needed to increase its QA rating to an acceptable level.

3.3.4 Determination of Correction Parameters

The following three categories of parameters appear in the refined emission factor equations presented in the previous section:

1. Measures of source activity,

2. Properties of material being disturbed, and

3. Climatic parameters.

Measures of source activity are expressed in terms of equipment characteristics (such as vehicle weights and loader bucket sizes) which are available from plant records. The paragraphs below describe methods for determination of material properties and climatic parameters.

In order to determine the properties of aggregate materials being disturbed by the action of machinery or wind, representative samples of the materials must be obtained for analysis in the laboratory. Unpaved and paved roads are sampled by removing loose material (by means of vacuuming and/or broom sweeping) from lateral strips of road surface extending across the traveled portion. Storage piles are sampled to a depth exceeding the size of the largest aggregate pieces. Exposed ground areas are sampled by removing loose surface material or, if a crust has formed, by removing material to a depth of about 1 to 2 cm.

In all cases, several incremental samples are combined to form a composite sample. The composite sample is then transferred to the laboratory in a moisture impervious container.

The material properties of interest are moisture content and texture (specifically silt content and cloddiness). Moisture is determined in the laboratory by weight loss after oven drying at 110°C. Texture is determined by standard dry sieving techniques.

OPEN DUST SOURCE: Wind Erosion of Exposed Areas
QA RATING: C

Based on testing of emissions from wind erosion of agricultural fields of varying silt content.

Estimated factor to account for fact that wind erosion occurs only above threshold wind speed.

$$EF = 3400 \frac{\left(\frac{e}{50}\right)\left(\frac{s}{15}\right)\left(\frac{f}{25}\right)}{\left(\frac{P-E}{50}\right)^2} \text{ lb/acre-yr}$$

Assumed by analogy to Wind Erosion Equation

where: EF = suspended particulate emissions (lb/acre-yr)
e = surface erodibility (tons/acre-year)
s = silt content of surface material (%)
f = percentage of time wind speed exceeds 12 mph
P - E = Thornthwaite's Precipitation - Evaporation Index

Figure 3-10. Predictive emission factor equation for wind erosion of exposed areas.

The moisture content of an exposed aggregate material is dependent on its initial moisture content and on the precipitation and evaporation which occurs while the material is in place. Thornthwaite's P-E Index is a useful approximate measure of average surface soil moisture, but is not suitable for freely draining aggregate stored in open piles.

The texture of a raw material such as lump iron ore may vary substantially with the method of mining, processing, and transport. Materials processed at iron and steel plants such as slag, sinter, and coke exhibit variable texture dependent on the method of processing and handling.

The climatic parameters of interest are (a) dry days per year, (b) P-E Index, and (c) frequency with which the wind speed exceeds 12 mph. Dry days per year for any geographical area of the United States may be found from a map of mean annual number of days with 0.01 in. or more of precipitation, as given in AP-42.[29] A U.S. map of P-E Index by state climatic region was constructed by MRI and is also found in AP-42.[29] Finally, long-term average annual wind speed distributions for reporting weather stations may be found in the Climatic Atlas.[31]

3.3.5 Best Open Dust Source Emission Factors

Since only a few of the many open dust sources were actually quantified by field testing, the best open dust source emission factors must necessarily be a hybrid of both estimated and measured values. In Table 3-14 the best emission factors are presented for (a) the storage of various raw materials, (b) materials transfer, (c) vehicular traffic on unpaved roads, and (d) wind erosion.

The method for determining the best suspended emission particulate factor and the percent of suspended particulate that is fine is described in the table as either (a) estimation, (b) measurement, or (c) calculation. These methods are defined in footnotes to Table 3-14.

TABLE 3-14. SELECTION OF BEST EMISSION FACTORS FOR OPEN DUST SOURCES

Source	Units	Suspended particulate emission factor range	Best suspended particulate emission factor	Quality of best emission factor value	Percent of suspended particulate that is fine[a]	Quality of fine particle percentage value	Best fine particulate emission factor
1. Unloading raw materials							
Iron ore							
Lump	kg/t lump ore (lb/T lump ore)	-	0.00045 (0.0009)	Estimate[b]	30	Estimate	0.00013 (0.00027)
Pellets	kg/t pellets (lb/T pellets)	-	0.005 (0.01)	Estimate	30	Estimate	0.0015 (0.003)
Coal	kg/t coal (lb/T coal)	0.023-0.2 (0.046-0.4)	0.023 (0.046)	Estimate	35	Estimate	0.008 (0.016)
Limestone/ dolomite	kg/t stone (lb/T stone)	-	0.023 (0.046)	Estimate	35	Estimate	0.008 (0.016)
2. Conveyor transfer stations							
Iron ore							
Lump	kg/t lump ore (lb/T lump ore)	-	0.00045 (0.0009)	Estimate	30	Estimate	0.00013 (0.00027)
Pellets	kg/t pellets (lb/T pellets)	-	0.005 (0.01)	Estimate	30	Estimate	0.0015 (0.003)
Coal	kg/t coal (lb/T coal)	-	0.023 (0.046)	Estimate	35	Estimate	0.008 (0.016)
Limestone/ dolomite	kg/t stone (lb/T stone)	-	0.023 (0.046)	Estimate	35	Estimate	0.008 (0.016)
Coke	kg/t coke (lb/T coke)	0.011-0.06 (0.023-0.11)	0.023 (0.046)	Estimate	35	Estimate	0.008 (0.016)
Sinter	kg/t sinter (lb/T sinter)	-	0.023 (0.046)	Measured[c]	35	Measured	0.008 (0.016)

(continued)

TABLE 3-14 (continued)

Source	Units	Suspended particulate emission factor range	Best suspended particulate emission factor	Quality of best emission factor value	Percent of suspended particulate that is fine[a]	Quality of fine particle percentage value	Best fine particulate emission factor
3. Storage pile activities							
Iron ore							
Lump	kg/t lump ore (lb/T lump ore	-	0.11 (0.22)	Calculated[d]	30	Estimated	0.033 (0.066)
Pellet	kg/t pellets (lb/T pellets)	-	0.11 (0.22)	Calculated	30	Estimated	0.033 (0.066)
Coal	kg/t coal (lb/T coal)	-	0.07 (0.14)	Calculated	30	Estimated	0.021 (0.042)
Limestone/ dolomite	kg/t stone (lb/T stone)	-	0.06 (0.12)	Calculated	30	Estimated	0.018 (0.036)
Coke	kg/t coke (lb/T coke)	-	0.041 (0.083)	Calculated	30	Estimated	0.012 (0.025)
Sinter input materials	kg/t input (lb/T input)	-	0.18 (0.37)	Calculated	30	Estimated	0.055 (0.11)
Slag	kg/t slag (lb/T slag)	-	0.009 (0.18)	Calculated	30	Estimated	0.027 (0.054)
4. Vehicular traffic							
Unpaved roads							
Light duty	kg/vehicle-km (lb/VMT)	-	0.73 (2.6)	Calculated	30	Measured	0.22 (0.78)
Medium duty	kg/vehicle-km (lb/VMT)	-	2.2 (7.8)	Calculated	35	Measured	0.77 (2.7)
Heavy duty	kg/vehicle-km (lb/VMT)	-	2.8 (10)	Calculated	40	Measured	1.1 (4.0)
Paved roads	kg/vehicle-km (lb/VMT)	-	0.27 (0.95)	Measured	50	Measured	0.13 (0.47)

(continued)

TABLE 3-14 (continued)

Source	Units	Suspended particulate emission factor range	Best suspended particulate emission factor	Quality of best emission factor value	Percent of suspended particulate that is fine[a]	Quality of fine particle percentage value	Best fine particulate emission factor
5. Wind erosion of bare areas	$kg/km^2/yr$ (lb/acre/yr)	103,000-187,000 (917-1,670)	144,000 (1,290)	Calculated	30	Estimated	43,000 (190)

a/ Weight percent of particles with a diameter less than 5 μm divided by weight percent of particles with a diameter less than 30 μm times 100.

b/ NRI estimate based on comparison with like source.

c/ Average of sampling results as reported in Table 3-7.

d/ Average calculated emission factor for the four surveyed plants (see Section 4.0) weighted over the source extents.

Reproduced from best available copy.

SECTION 4.0

OPEN DUST SOURCE SURVEYS

This section presents the results of field surveys of open dust sources at four plants (ranging in capacity from approximately 1.5 to 2.5 million tons of ingots per year. The purpose of the surveys was to collect data on source extent, source activity levels, and properties of exposed materials which comprised the dust emitting surfaces (unpaved and paved roads), storage piles and exposed ground areas. Survey results are given below for each plant, denoted by letters A through D.

The experimentally determined emission factors for open dust sources given in Figures 3-4 through 3-10 and reproduced in Table 4-1 were used to calculate fugitive dust emissions. Emission rates were determined through multiplication of the appropriate emission factor and the source extent.

4.1 SURVEY RESULTS FOR PLANT A

This section presents the results of a survey of open dust sources at a representative iron and steel plant designated as Plant A. Survey procedures and results are given separately for each source category.

4.1.1 Vehicular Traffic

Table 4-2 lists source extent, emission factor correction parameters, and calculated emission rates for specific unpaved and paved roads lying within the property boundaries of Plant A.

Source Extent--

The following steps were used to develop the inventory of roads, vehicle types, and mileage traveled:

1. Road segments with specific surface and traffic characteristics were identified and the length of each segment was determined from a map of the plant.

2. The types and weights of vehicles traveling on each road segment were specified by plant personnel.

TABLE 4-1. FUGITIVE DUST EMISSION FACTORS EXPERIMENTALLY DETERMINED BY MRI

Source category	Measure of extent	Emission factor[a/] (lb/unit of source extent)	Correction parameters
1 Unpaved Roads	Vehicle - Miles Traveled	$5.9\left(\frac{s}{12}\right)\left(\frac{S}{30}\right)\left(\frac{W}{3}\right)^{0.8}\left(\frac{d}{365}\right)$	s = Material Silt Content (%) S = Average Vehicle Speed (mph) W = Vehicle Weight (tons) L = Surface Dust Loading on Traveled Portion of Road (lb/mile) U = Mean Wind Speed (mph) M = Material Surface Moisture Content (%) Y = Dumping Device Capacity (yd^3) K = Activity Correction d = Number of Dry Days per Year f = Percentage of Time Wind Speed Exceeds 12 mph D = Duration of Material Storage (days) e = Surface Erodibility (tons/acre/year) P - E = Thornthwaites Precipitation-Evaporation Index
2 Paved Roads	Vehicle - Miles Traveled	$0.45\left(\frac{s}{10}\right)\left(\frac{L}{5,000}\right)\left(\frac{W}{3}\right)^{0.8}$	
3 Batch Load-In (e.g., front-end loader, railcar dump)	Tons of Material Loaded in	$0.001K\,\frac{\left(\frac{s}{5}\right)\left(\frac{U}{5}\right)}{\left(\frac{M}{2}\right)^2\left(\frac{Y}{6}\right)}$	
4. Continuous Load-In (e.g., stacker, transfer station)	Tons of Material Loaded in	$0.001K\,\frac{\left(\frac{s}{5}\right)\left(\frac{U}{5}\right)}{\left(\frac{M}{2}\right)^2}$	
5. Storage Pile Maintenance and Traffic	Tons of Material Stored	$0.10K\left(\frac{s}{1.5}\right)\left(\frac{d}{235}\right)$	
6. Storage Pile Wind Erosion	Tons of Material Stored	$0.05\left(\frac{e}{1.5}\right)\left(\frac{d}{235}\right)\left(\frac{f}{15}\right)\left(\frac{D}{90}\right)$	
7 Batch Load-Out	Tons of Material Loaded out	$0.001K\,\frac{\left(\frac{s}{5}\right)\left(\frac{U}{5}\right)}{\left(\frac{M}{2}\right)^2\left(\frac{Y}{6}\right)}$	
8 Wind Erosion of Exposed Areas	Acre-Years of Exposed Land	$3,400\,\frac{\left(\frac{e}{50}\right)\left(\frac{s}{15}\right)\left(\frac{f}{25}\right)}{\left(\frac{P-E}{50}\right)^2}$	

a/ Annual average emissions of dust particles smaller than 30 μm in diameter based on particle density of 2.5 g/cm^3.

TABLE 4-2. PLANT A: ROAD EMISSIONS

Roads	Source extent: Road length (miles)[a]	Source extent: Vehicle miles traveled (miles/day)[b]	Source extent: Vehicle class (light duty A, medium duty B, heavy duty C)	Correction parameters: Vehicle weight (tons)[c]	Correction parameters: Vehicle speed (mph)[b]	Correction parameters: Dry days per year	Correction parameters: Road surface silt content (%)	Correction parameters: Surface loading (lb/mile)[c]	Emissions*: Emission factor (lb/VMT)	Emissions*: Yearly emissions (tons/year)
Unpaved										
Slag Hauling	1 3	90	C	30	25	275	7[d]	--	3 4[e]	56
Hot Strip	0 9	105	A&B	8	25	275	10[c]	--	6 8	130
Slag Plant	3 0	288	C	30	10	275	13[d]	--	10.0	530
Coke Pile	0 3	28	C	30	25	275	4[d]	--	7 8	40
Total	5 5	511								760
Paved										
Coal Storage	0 7	120	B	8	25	-	10[c]	15,000[c]	3 0	66
Coke Plant	0 8	56	B	15	25	-	10[c]	15 000[c]	4.9	50
Other Paved	12 8	1,030	B	8	25	-	7[c]	5,000[c]	0.69	130
Total	14 3	1,206								250

a/ Determined from plant map.

b/ Data obtained from plant personnel

c/ Assumed value by MRI

d/ Determined by means of dry sieving

e/ Factor has been reduced by 75% to account for road surface oiling

* All emissions are based on particulates less than 30 μ in diameter.

3. Figures on the daily mileages traveled by each vehicle type were furnished by plant personnel.

4. Information provided by plant personnel was used to apportion the mileage traveled by each vehicle type over the various road segments.

Approximately 72% of Plant A's 20 miles of roads are paved and on the whole have relatively low particulate surface loadings and resultant emission rates. Two paved roads, the coal storage and coke plant roads, have very high surface loadings, with resultant high emissions.

Vehicular traffic at Plant A was comprised of three basic vehicle types:

* Type A - light duty (automobiles and pick-up trucks with 3 ton average weight).

* Type B - medium duty (flatbeds and other medium-sized trucks with 15 ton average weight).

* Type C - heavy duty (larger trucks with 30 ton average weight).

Vehicle mileage figures supplied by plant personnel were as follows·

* Open hearth slag hauling trucks (Type C): 90 miles/day

* Coke hauling trucks (Type C): 83 miles/day

* Miscellaneous medium trucks (Type B): 197 miles/day

* Automobiles and light trucks (Type A): 1,056 miles/day

* Miscellaneous slag plant traffic (Type C): 288 miles/day

The above mileages were distributed among the various road segments based on observed traffic patterns, confirmed by plant personnel. All slag hauling truck miles were assigned to the slag hauling road. One-third of the coke hauling truck miles were assigned to the unpaved portion of the coke hauling road and two-thirds of the paved portion. All slag plant traffic was assigned to the slag plant roads. The remainder of the vehicular traffic was observed to be uniformly distributed over all plant roads except the unpaved portion of the coke hauling road, the slag hauling road, and slag plant roads. Therefore, this remaining traffic was assigned to each remaining road in direct proportion to the fraction of the road in ratio to the total road length excluding the three mentioned above (15.4 mile).

Correction Parameters--

During the plant survey, samples of loose surface material were taken from the slag hauling road, slag plant road, and the coke pile road and analyzed in the plant laboratory. Samples were tested to determine silt content. The hot strip road was assigned a silt content between the values for the slag hauling road and the slag plant road. The silt content of surface material on paved roads was given a typical value of 10%. Surface dust loadings on paved roads were estimated from observation.

Average vehicle speed for each segment of unpaved or paved road was estimated by plant personnel, and the number of dry days per year for the plant locale was determined from the Climatic Atlas.[31] For road segments having a mixture of vehicle types, average vehicle weights were derived by accounting for mileage attributed to each vehicle type.

4.1.2 Storage Pile Activities

An inherent part of the operation of integrated iron and steel plants is the maintenance of outdoor storage piles of mineral aggregates used as raw materials, and of process wastes. Storage piles are usually left uncovered, partially because of the necessity for frequent transfer of material into or out of storage.

Dust emissions occur at several points in the storage cycle--during loading of material onto the pile, whenever the pile is acted on by strong wind currents, and during loadout of material from the pile. Truck and loading equipment traffic in the storage pile areas are also a substantial source of dust emissions.

Source Extent--

Table 4-3 gives data on the extent of open storage operations involving primary aggregate materials at Plant A. This information was developed from (a) discussions with plant personnel, (b) plant statistics on quantities of materials consumed, and (c) field estimations during the plant survey.

Table 4-3 also presents the emission factors for the open storage of primary aggregate materials at Plant A. The rationale for the use of the emission factor expression (Table 4-1) for each operation is given below.

The operation of loading onto storage piles at Plant A utilized either overhead loaders, dump truck and front-end loader combinations or various types of stackers. These operations were judged to be comparable to the operations for which field measurements were performed. Therefore, Equations (3) and (4) in Table 4-1 were used directly to describe emissions from storage pile load-in.

TABLE 4-3. PLANT A: STORAGE PILE EMISSIONS

Material in storage	Source extent: Amount in storage (tons)[a]	Source extent: Annual throughput (million tons)[b]	Emission factors*: Load in (lb/ton stored)	Emission factors*: Vehicular traffic (lb/ton stored)	Emission factors*: Wind erosion (lb/ton stored)	Emission factors*: Load out (lb/ton stored)	Emission factors*: Total storage cycle (lb/ton stored)	Yearly emissions (tons/year)
Medium volatility coal	42,500	0.5	0.0003	0.11	0.098	0.0003	0.21	54
High volatility coal	127,000	1.5	0.0001	0.039	0.032	0.0001	0.073	54
Iron ore pellets	125,000	1.5	0.032	c/	0.042	0.006	0.081	61
Lump iron ore	242,000	2.9	0.022	c/	0.14	0.004	0.17	250
Coke	185,000[b]	1.0	0.0007	0.078	0.016	0.001	0.096	48
Slag	129,000	1.5	0.001	d/	0.074	0.003	0.19	150
Total	850,000	8.9						620

a/ Calculated as 1/12 the annual throughput.

b/ Data obtained through plant personnel.

c/ Determined negligible.

d/ Considered in the unpaved road calculations.

* All emissions are based on particulates less than 30 μ in diameter.

Vehicular traffic around storage piles at Plant A was generally less intense than traffic around emission-tested aggregate storage piles consisting of truck and front-end loader movements associated with load-in and load-out. Stored aggregate materials assigned a traffic-related emission factor of zero were: medium volatility coal, high volatility coal, lump iron ore, and pelletized iron ore. The coke storage piles at Plant A were worked in a manner similar to the emission-tested aggregate, as reflected by Equation (5) in Table 4-1 with K = 1. Traffic around processed slag storage piles was covered under unpaved roads above.

Equation (6) in Table 4-1 was used directly to calculate emissions from wind erosion of storage piles at Plant A. However, the emission factor for wind erosion from iron ore pellet piles was multiplied by 0.2 to account for the lack of saltation size particles required for the erosion process.[32]

A wide range of aggregate load-out (reclaiming) operations were observed at Plant A. Load-out of lump iron ore and iron ore pellets by gravitational drop onto underground conveyors generated little fugitive dust, as reflected by the assumed activity factor of 0.2 for Equation (4). Coal piles were loaded out through the use of high loaders which dumped material onto underground conveyors, a process similar in nature to load-in of emission-tested aggregate, but having an assumed activity factor of 0.8. Coke and slag piles were loaded out in a manner similar to load-out of emission-tested aggregates, so Equation (7) was used directly.

Correction Parameters--

Values for aggregate silt content and moisture content were obtained from laboratory analysis of samples of stored materials or were estimated. Duration of storage for each material was estimated by plant personnel. Loader bucket sizes were estimated by MRI personnel. Climatic correction parameters (mean wind speed = 8.7 mph, dry days per year = 275, and percentage of time that the wind speed exceeds 12 mph = 19) were obtained from the Climatic Atlas.[31] The correction factors used in determining emissions for Plant A's storage pile activities are presented in Table 4-4.

4.1.3 Wind Erosion of Exposed Areas

Unsheltered areas of exposed ground around plant facilities are subject to atmospheric dust generation by wind erosion, whenever the wind exceeds the threshold velocity of about 12 mph. The exposed ground area within the boundaries of Plant A was estimated to be 25% of the plant property, based on observations during the plant survey. To account for the sheltering effect of buildings, the effective exposed area was taken to be 12.5% of the plant property.

TABLE 4-4. PLANT A. STORAGE PILE CORRECTION PARAMETERS[a]

Material in storage	Silt content (%)	Moisture content[b] (%) L.I.	Moisture content[b] (%) L.O	Mean wind speed[c] (mph)	Percentage wind speed > 12 mph[c] (%)	Dry days per year (days)[c]	Duration of storage (days)[d]	Effective loader capacity (cu. yd) L.I.	Effective loader capacity (cu. yd) L.O.	Activity factor[e] L.I	Activity factor[e] T.	Activity factor[e] W.E.	Activity factor[e] L.O.
Medium volatility coal	6.0[f]	7.0	5.6	8.7	19	275	30	g/	6	1.0	0.25	1.0	0.8
High volatility coal	2.0[f]	7.0	5.6	8.7	19	275	30	g/	6	1.0	0.25	1.0	0.8
Iron ore pellets	13[f]	1.0	1.0	8.7	19	275	30	g/	g/	1.0	0	0.2	0.2
Lump iron ore	9.0[f]	1.0	1.0	8.7	19	275	30	g/	g/	1.0	0	1.0	0.2
Coke	1.0[e]	1.0	1.0	8.7	19	275	30	20	10	1.0	1.0	1.0	1.0
Slag	1.5[e]	1.0	0.8	8.7	19	275	90	20	10	1.0	1.0	1.0	1.0

a/ L.I. = load-in, T. = traffic, W.E = wind erosion, L.O. = load-out.

b/ All moisture values are assumed by MRI based on limited field measurements.

c/ Obtained from Climatic Atlas.[31]

d/ Obtained from plant personnel.

e/ Assumed value by MRI.

f/ Determined by means of dry sieving.

g/ Stacker (L.I.) or mechanical reclaimer (L.O.) utilized.

As indicated in Table 4-1, the parameters which influence the amount of dust generation by wind erosion are surface erodibility, silt content of surface material, P-E Index, and fraction of the time the wind speed exceeds 12 mph. The surface erodibility factor (47) and the surface silt content (15%) were derived from analysis of surface slag material at Plant B. Thornthwaite's P-E Index for Plant A was determined to be 45.[29] Finally, the value for the fraction of time the wind speed was greater than 12 mph (19%) was obtained from weather records.[31] The results from wind erosion of Plant A's exposed areas are presented in Table 4-5.

4.1.4 Summary of Dust Emissions

A breakdown of calculated emissions from open dust sources at Plant A is presented in Table 4-6. For Plant A, the largest contributing source category was unpaved roads. Emissions generated by storage piles and exposed areas ranked next in order. The contribution of the paved roads to the dust inventory was minimal.

4.2 SURVEY RESULTS FOR PLANT B

This section presents the results of a survey of open dust sources at a representative iron and steel plant designated as Plant B. Survey procedures and results are given separately for each source category.

4.2.1 Vehicular Traffic

Table 4-7 lists source extent, emission factor correction parameters, and calculated emission rates for specific unpaved and paved roads lying within the property boundaries of Plant B.

The experimentally determined emission factors for paved and unpaved roads given in Table 4-1 were used to calculate fugitive dust emissions. The appropriate measure of source extent is vehicle-miles traveled.

Source Extent--

The following steps were used to develop the inventory of roads, vehicle types, and mileage traveled:

1. Road segments with specific surface and traffic characteristics were identified and the length of these segments were determined from a map of the plant.

2. The types and weights of vehicles traveling on each road segment were specified by plant personnel.

TABLE 4-5. PLANT A: EXPOSED AREA EMISSIONS

	Source extent			Correction parameters				Emissions*	
Wind erosion	Total plant area (acres)	Total exposed area (acres)	Effective exposed area (acres)	Soil erodibility (tons/acre/year)	Surface silt soil content (%)	Wind Speed	PE	Emission factor (lb/acre/year)	Yearly emissions (tons/year)
Plant A open areas	1,502	376	188[a/]	47[b/]	20[c/]	19[d/]	45[e/]	4,000	380

a/ Effective exposed area that area which is unsheltered by nearby buildings (effective exposed area = total exposed area x 0 5).

b/ Assumed value by MRI based on slag ground cover.

c/ Assumed value based on known nearby agricultural land silt content.

d/ Percentage of the time the wind speed is greater than 12 mph.

e/ Thornthwaites' P-E Index

* All emissions are based on particulates less than 30 μ in diameter.

TABLE 4-6. PLANT A: SUMMARY OF OPEN DUST SOURCE EMISSIONS

	Major dust contributors	
	Suspended particulate emissions (tons/yr)	Percentage of total
1. Unpaved Roads	760	38
2. Total Paved Roads	250	12
3. Total Wind Erosion - Exposed Areas	380	19
4. Storage Piles		
Lump Iron Ore	250	12
Iron Ore Pellets	61	3
Combined (High - Low Volatility) Coal	110	6
Other Storage Piles	200	10
Total All Open Sources	2,010	100%

TABLE 4-7. PLANT B: ROAD EMISSIONS

Roads	Source extent: Road length (miles)[a]	Source extent: Vehicle miles traveled (miles/day)[b]	Source extent: Vehicle class (light duty A, medium duty B, heavy duty C)	Correction parameters: Vehicle weight (tons)[c]	Correction parameters: Vehicle speed (mph)[b]	Correction parameters: Dry days per year	Correction parameters: Road surface silt content (%)[c]	Correction parameters: Surface loading (lb/mile)[c]	Emissions*: Emission factor (lb/VMT)	Emissions*: Yearly emissions (tons/yr)
Unpaved	-	168	A	3	15	265	10	-	1.7	52
	-	160	B	15	15	265	10[d]	-	6.5	190
	-	672	C	30	15	265	10	-	11.3	1,390
Total unpaved	3.8	1,000								1,632
Paved dusty	2.0	325	B	15	20	-	10	15,000[d]	4.9	290
Other	11.5	1,839	B	15	20	-	7	5,000[d]	1.1	370
Total paved	13.5	2,164								660

a/ Determined from plant map.

b/ Data obtained from plant personnel.

c/ Assumed value by MRI

d/ Determined by means of dry sieving

* All emissions are based on particulates less than 30 μm in diameter

3. Data on the daily mileage traveled by each vehicle type was calculated from plant motor pool information, specifying vehicle hours used per week. To calculate miles traveled per day, a utilization factor and average vehicle speed were used.

4. Information provided by plant personnel was used to apportion the mileage traveled by each vehicle type over the various road segments.

Approximately 78% of Plant B's 17.3 miles of roads are paved and have relatively low particulate surface loadings and resultant emission rates. However, about 2 miles of paved roads was assigned a loading of 15,000 lb/mile, based on visual observation, and have relatively high emissions.

Vehicular traffic at Plant B was comprised of three basic vehicle types:

* Type A - light duty (automobiles and pick-up trucks with 3-ton average weight).

* Type B - medium duty (flatbeds and other medium-sized trucks with 15-ton average weight).

* Type C - heavy duty (larger trucks with 30-ton average weight).

Vehicle mileage figures calculated from data obtained from plant personnel were as follows:

Unpaved roads	Paved roads
Type A - 168 miles/day	Type A - 1,057 miles/day
Type B - 159 miles/day	Type B - 524 miles/day
Type C - 672 miles/day	Type C - 582 miles/day
Total: 1,000 miles/day	Total: 2,163 miles/day

Paved roads were divided into two categories: highly loaded (dusty) paved and moderately loaded paved roads. Because dusty paved roads constituted approximately 15% of the total paved road mileage, it was assumed that 15% of the apportioned paved road traffic would travel on the dusty roadways.

Correction Parameters--

At Plant B, one unpaved road segment was sampled for the silt content of the surface material. This laboratory silt content (10%) was assumed to apply to the other unpaved road segments at Plant B. The surface silt content for paved roads was assumed to be 10%, a typically measured value.

Average vehicle speed for each segment of unpaved or paved road was estimated by plant personnel and the number of dry days per year for the plant locale was determined from the Climatic Atlas.[31]

For road segments having a mixture of vehicle types, average vehicle weights were derived by accounting for mileage attributed to each vehicle type.

4.2.2 Storage Pile Activities

Source Extent--

Table 4-8 gives data on the extent of open storage operations involving primary aggregate materials at Plant B. This information was developed from (a) discussions with plant personnel, (b) plant statistics on quantities of materials consumed, and (c) field estimations during the plant survey.

Table 4-8 also presents the emission factors for the storage of primary aggregate materials at Plant B. The rationale for the use of the emission factor expression (Table 4-1) for each operation is given below.

The method of loading onto storage piles at Plant B consisted of various types of stackers coupled with a sizable conveyor network. Therefore, Equation (4) from Table 4-1 was used directly to calculate emissions from storage pile load-in.

Vehicular traffic around storage piles at Plant B was generally less intense than traffic around emission-tested sand and gravel aggregate storage piles, consisting of truck and high loader movements associated with the load-in and load-out process. Stored aggregate materials assigned a traffic-related emission factor of zero were: coal, iron ore pellets, and lump iron ore.

At Plant B, only the ore bedding, slag piles, and coke have vehicles moving among the piles during the storage cycle. An activity factor of 0.25 was used with Equation (5) in Table 4-1 to scale the vehicular traffic emissions in the ore bedding area and around coke piles, and a factor of 1 was used for processed slag piles.

Equation (6) in Table 4-1 was used directly to calculate emissions from wind erosion of storage piles at Plant B. However, the emission factor for wind erosion from iron ore pellet piles was multiplied by 0.2 to account for the lack of saltation size particles required for the erosion process.[32]

Methods of loading out (reclaiming) materials from the storage piles at Plant B included reclaimers which "rake" the materials onto a conveyor and the front-end loader/truck method similar to the emission tested operations.

TABLE 4-8. PLANT B: STORAGE PILE EMISSIONS

Material in storage	Source extent: Amount in storage (tons) a/	Source extent: Annual throughput (million tons) b/	Emission factors*: Load in (lb/ton stored)	Emission factors*: Vehicular traffic (lb/ton stored)	Emission factors*: Wind erosion (lb/ton stored)	Emission factors*: Load out (lb/ton stored)	Emission factors*: Total storage cycle (lb/ton stored)	Yearly emissions (tons/yr)
Coal	25,000	0.54	0.001	c/	0.14	0 0003	0.14	40
Iron ore pellets	100,000	0.24	0 005	c/	0.13	0.04	0 18	22
Lump iron ore	188,000	0 62	0 001	c/	0.30	0 0002	0.30	94
Coke	20,000	0 38	0 003	0.01	0.03	0 0006	0.05	11
Ore bedding	15,000	0.29	0.006	0.17	0 60	0.0009	0.77	110
Slag	162,000	1.97	0.005	0 11	0 05	0 007	0.17	170
Total	510,000	4.04						450

a/ Calculated as 1/12 the annual throughput

b/ Data obtained through plant personnel.

c/ Determined negligible.

* All emissions are based on particulates less than 30 μm in diameter.

Equations (7) and (4) in Table 4-1 were used with appropriate activity factors to calculate emissions from load-out. Because the reclaimer method produces less dust emissions than the stacker, an activity factor of 0.2 was used with Equation (4) to calculate dust emissions. Equation (7) was used for those materials removed via front-end loader/trucks.

Correction Parameters--

Values for aggregate silt content and moisture content were obtained from laboratory analysis of samples of stored materials or were estimated. Duration of storage for each material was estimated by plant personnel. Loader bucket sizes were estimated by MRI personnel. Climatic correction parameters (mean wind speed = 11.8 mph, dry days per year = 265, and percentage of time that the wind speed exceeds 12 mph = 40) were obtained from the Climatic Atlas.[31] These correction factors are presented in Table 4-9.

4.2.3 Wind Erosion of Exposed Areas

Unsheltered areas of exposed ground around plant facilities are subject to atmospheric dust generated by wind erosion, whenever the wind exceeds the threshold velocity of about 12 mph. The exposed ground area within the boundaries of Plant B was estimated to be 124 acres based on areas outlined on a map by plant personnel. To account for the sheltering effect of buildings, the effective exposed area was taken to be 75% of the indicated bare ground areas.

As indicated in Table 4-10 the parameters which influence the amount of dust generation by wind erosion are surface erodibility, silt content of the surface material, P-E Index, and fraction of the time the wind speed exceeds 12 mph. The values used for these parameters and the exposed area emissions for Plant B are presented in Table 4-10.

4.2.4 Summary of Dust Emissions

The relative emission contributions of the four source categories are given in Table 4-11. Emissions generated by unpaved roads account for 58% of Plant B's total. Emissions from plant paved roads and storage piles are next in magnitude. Emissions from exposed area wind erosion are relatively insignificant.

4.3 SURVEY RESULTS FOR PLANT C

This section presents the results of a survey of open dust sources at a representative iron and steel plant, designated as Plant C. Survey results and procedures are given below for each source category.

TABLE 4-9. PLANT B: STORAGE PILE CORRECTION PARAMETERS[a]

Material in storage	Silt content (%)	Moisture content[b] (%)		Mean wind speed[c] (mph)	Percentage wind speed >12 mph[c] (%)	Dry days per year (days)[c]	Duration of storage (days)[d]	Effective loader capacity (cu. yd)		Activity factor[e]			
		L.I	L.O					L.I.	L.O.	L.I	T	W.E	L.O
Coal	4.4[f]	3.0	3.0	11.8	40	265	30	g	g	1.0	0	1.0	0.2
Iron ore pellets	6.7[f]	2.0	2.0	11.8	40	265	90	g	g	1.0	0	0.2	0.2
Lump iron ore	9.0[e]	5.0	5.0	11.8	40	265	30	g	g	1.0	0	1.0	0.2
Coke	1.0[e]	1.0	1.0	11.8	40	265	30	g	g	1.0	0.25	1.0	0.2
Ore bedding	9.0[e]	7.0	5.6	11.8	40	265	60	g	6	1.0	0.25	1.0	1.0
Slag	1.5[e]	1.0	0.8	11.8	40	265	30	g	6	1.0	1.0	1.0	1.0

a/ L.I. = load-in, T. = traffic, W.E. = wind erosion, L.O. = load-out.

b/ All moisture values are assumed by MRI based on limited field measurements.

c/ Obtained from Climatic Atlas.[31]

d/ Obtained from plant personnel.

e/ Assumed value by MRI.

f/ Determined by means of dry sieving

g/ Stacker (L.I.) or mechanical reclaimer (L.O.) utilized

TABLE 4-10. PLANT B: WIND EROSION - OPEN AREA EMISSIONS

Wind erosion	Source extent: Total plant area (acres)	Source extent: Total exposed area (acres)	Source extent: Effective exposed area (acres)	Correction parameters: Soil erodibility (tons/acre/yr)	Correction parameters: Surface soil silt content (%)	Correction parameters: Wind speed	Correction parameters: PE	Emissions*: Emission factor (lb/a /yr)	Emissions*: Yearly emissions (tons/yr)
Plant B open areas	787	124	93[a/]	47[b/]	13.6[c/]	40[d/]	83[e/]	1,700	79

a/ Effective exposed area that area which is unsheltered due to its proximity to nearby buildings (effective exposed area = total exposed area x 0 75).

b/ Assumed value by MRI based on slag ground cover.

c/ Determined through dry sieving.

d/ Percentage of the time the wind speed is greater than 12 mph.

e/ Thornthwaites P-E Index.

* All emissions are based on particulates less than 30 μ in diameter.

TABLE 4-11. PLANT B: SUMMARY OF OPEN DUST SOURCE EMISSIONS

Source	Major dust contributors: Suspended particulate emissions (tons/yr)	Percentage of total
1. Total Unpaved Roads	1,632	58
2. Paved Roads	660	23
3. Total Wind Erosion - Exposed Areas	79	3
4. Storage Piles		
Lump Iron Ore	94	3
Ore Bedding	110	4
Slag	170	6
Other Storage Piles	76	3
Total all open sources	2,821	100%

4.3.1 Vehicular Traffic

Table 4-12 lists source extent, emission factor correction parameters, and calculated emission rates for specific unpaved and paved roads lying within the property boundaries of Plant C.

The experimentally determined emission factors for paved and unpaved roads given in Table 4-1 were used to calculate fugitive dust emissions. The appropriate measure of source extent is vehicle-miles traveled.

Source Extent--

The following steps were used to develop the inventory of roads, vehicle types and mileage traveled:

1. Road segments with specific surface and traffic characteristics were identified and the length of each segment was determined by plant personnel.

2. The types and weights of vehicles traveling on each road segment were specified by plant personnel.

3. Figures on the daily mileages traveled by each vehicle type were furnished by plant personnel.

4. Information provided by plant personnel was used to apportion the mileage traveled by each vehicle type over the various road segments.

Approximately 81% of Plant C's 27 miles of roads are paved and on the whole have relatively low particulate surface loadings and resultant emission rates. There are 4.6 miles of "dusty-paved" roads within Plant C, as indicated by plant personnel. These roads have considerably higher surface particulate loadings with resultant higher emission factors than the other paved roads within the plant.

Vehicular traffic at Plant C was comprised of two basic vehicle types:

1. Type A - light duty (automobiles and pick-up trucks with 3-ton average weight).

2. Type B - medium duty (flatbeds and other medium-sized trucks with 15-ton average weight).

Data pertaining to the daily vehicle-miles traveled by both types of vehicles within the plant were obtained from plant personnel. It was indicated that this mileage was evenly distributed over the various road types at the plant.

TABLE 4-12. PLANT C: ROAD EMISSIONS

Roads	Source extent: Road length (miles)[a]	Source extent: Vehicle miles traveled (miles/day)[a]	Source extent: Vehicle class[a] (light duty A, medium duty B, heavy duty C)	Correction parameters: Vehicle weight (tons)	Correction parameters: Vehicle speed (mph)[a]	Correction parameters: Dry days per year	Correction parameters: Road surface silt content[b] (%)	Correction parameters: Surface loading (lb/mile)[b]	Emissions*: Emission factor (lb/VMT)	Emissions*: Yearly emissions (tons/yr)
Unpaved	5 2	250	A	3	25	295	10	-	3 3	150
. Dusty paved	4 6	554	A	3	25	-	10	15,000	1 3	130
		240	B	15	25	-	10	15,000	4 9	210
Other paved	17 2	2,082	A	3	25	-	10	5,000	0 45	170
		902	B	15	25	-	10	5,000	1 6	260
Total paved	21 8	3,778								770

a/ Obtained from plant personnel.

b/ Assumed value by MRI

* Particulate emissions are based on particles less than 30 μ in diameter

Correction Parameters--

Because of adverse weather conditions during the time of the survey, it was not possible to obtain representative samples of road surface dust from which to determine silt content. Therefore, a silt content of 10% for the particulate loading on Plant C's roadways was assumed. Average vehicle speed for each segment of unpaved or paved road was estimated by plant personnel and the number of dry days per year for the plant locale was determined from the Climatic Atlas.[31]

4.3.2 Storage Pile Activities

Source Extent--

Table 4-13 gives data on the extent of open storage operations involving primary aggregate materials at Plant C. This information was developed from (a) discussions with plant personnel, (b) plant statistics on quantities of materials consumed, and (c) field estimations during the plant survey.

Table 4-13 also presents the emission factors for the open storage of primary aggregate materials used in Plant C. The rationale for the use of the emission factor expression (Table 4-1) for each operation is given below.

Methods of loading onto storage piles at Plant C consisted of utilizing clam shell buckets (for blast furnace input materials), movable stackers (for all blended ore beds and large stone) and front-end loaders for other materials. Equation (4) in Table 4-1 was used directly to calculate emissions from storage pile load-in with movable stackers and Equation (3) was used for load-in with clam shell buckets and front-end loaders.

Vehicular traffic around storage piles at Plant C, consisting of the use of front-end loaders only, was generally less intense than traffic around emission-tested aggregate (sand and gravel) storage piles, consisting of truck and high loader movements associated with the load-in and load-out. Stored aggregate materials assigned a traffic-related emission factor of zero were: blast furnace input materials (coke, sinter, and coarse ore) and the use of front-end loaders for load-out of the limestone-dolomite piles a represented by an activity factor of 0.25. To account for the use of front-end loaders for load-in/load-out, an activity factor of 0.5 was used with Equation (5) for all other materials.

Equation (6) in Table 4-1 was used directly to calculate emissions from wind erosion of storage piles at Plant C. However, an activity factor of 0.5 was applied to blast furnace coke, sinter, and iron ore piles to account for the depressed location which partially shelters these materials from the direct action of wind.

TABLE 4-13. PLANT C: STORAGE PILE EMISSIONS

Material in storage	Source Extent: Amount in storage[a/] (tons)	Source Extent: Annual throughout (million tons)[a/]	Emission Factors: Load-in (lb/ton stored	Emission Factors: Vehicular traffic (lb/ton stored)	Emission Factors: Wind erosion (lb/ton stored)	Emission Factors: Load-out (lb/ton stored)	Emission Factors: Total storage cycle (lb/ton stored)	Yea emis /tons
Coal								
Low volatility	10,500	0.06	0 0001	0 23	0.24	0 0002	0 47	
High volatility	19,000	0.11	0.0001	0 08	0.08	0 0001	0 17	
Iron Ore								
Utah Ore Fines	2,000	0.04	0 003	0.78	0 25	0 004	1.0	
Coarse Ore, Bed No 1	8,900	0.10	0.0006	0 37	0.20	0 0009	0 58	
Coarse Ore, Blast Furnace	37,000	0 07	0.0003	b/	0.60	0 0005	0 60	
Clean-up Ore	3,500	0.04	0.0004	0.37	0 20	0.0006	0.57	
Blended Ore beds	16,000	1.14	0 0005	b/	0 05	0 0001	0.05	
Stone Materials								
Reclaim Limestone	6,500	0.03	0.0004	0.06	0.10	0.0006	0.16	
Fine (screened) Limestone	16,250	0 07	0.0004	0.06	0 10	0 0006	0 16	
Fine Limestone	3,000	0.02	0 0004	0.06	0.10	0.0006	0.16	
Limestone	31,750	0.13	0.0004	0.03	0.10	0 0006	0 13	
Fine (screened) Dolomite	5,500	0 02	0.0004	0.06	0 10	0 0006	0 16	
Fine Dolomite	1,500	0.01	0 0004	0 06	0 10	0 0006	0 16	
Dolomite	3,000	0 04	0 0004	0.03	0.10	0 0006	0 13	
Miscellaneous								
Petroleum Coke	5,000	0 03	0.0006	0 04	0.04	0 0009	0 08	
Fine Coke Breeze	7,000	0 08	0.004	0 29	0.15	0 006	0 46	
Coke, Blast Furnace	9,000	0.03	0.002	b/	0.03	0 005	0.35	
Sinter, Blast Furnace	1,250	0.02	0 002	b/	0 05	0 005	0.05	
Flue Dust	c/	0.03	0.0005	0.58	0 93	0 0008	1 5	
Total	185,750	2.07						2

a/ Obtained from plant personnel.
b/ Determined negligible
c/ Data not available.
* All emissions are based on particles less than 30 microns in diameter

Methods of loading out (reclaiming) materials from the storage piles at Plant C included (a) reclaimers which "rake" the materials onto a conveyor, (b) clam shell buckets, and (c) front-end loaders which transfer the material to a conveyor bin, a process similar in nature to the load-out of emission-tested aggregate. Equations (4) and (7) in Table 4-1 were used with appropriate activity factors to calculate emissions from load-out. Because the reclaimer produces less dust emissions than the stacker, an activity factor of 0.2 was used with Equation (4) to calculate dust emissions. An activity factor of 1 was used with Equation (7) for clam shell buckets and front-end loaders.

Correction Parameters--

Values for aggregate silt content and moisture content were obtained from laboratory analysis of samples of stored materials or were estimated. Duration of storage for each material was estimated by plant personnel. Loader bucket sizes were estimated by MRI personnel. Climatic correction parameters (mean wind speed = 8.6 mph, dry days per year = 295, and percentage of time that the wind speed exceeds 12 mph = 24) were obtained from the Climatic Atlas.[31] These correction factors are presented in Table 4-14.

4.3.3 Wind Erosion of Exposed Areas

Unsheltered areas of exposed ground around plant facilities are subject to atmospheric dust generated by wind erosion, whenever the wind exceeds the threshold velocity of about 12 mph. The exposed ground area within the boundaries of Plant C was estimated to be 26.4 acres, based on plant map areas outlined by plant personnel. This is an extremely low value for exposed area within an integrated iron and steel plant facility, reflecting the fact that the vast majority of exposed areas within Plant C have been paved.

As indicated in Table 4-1, the parameters which influence the amount of dust generated by wind erosion are surface erodibility, silt content of surfact material, P-E Index, and fraction of the time the wind speed exceeds 12 mph. Soil erodibility and silt content were derived from the soil type in the vicinity of Plant C. The calculated emissions from wind erosion are presented in Table 4-15.

4.3.4 Summary of Dust Emissions

A breakdown of calculated emissions from open dust sources at Plant C is presented in Table 4-16. Paved roads (66%) is the largest contributing dust source, followed by the storage piles (18%). The other sources of open dust at Plant C, as seen in Table 4-16, are relatively small in comparison.

TABLE 4-14. PLANT C: STORAGE PILE CORRECTION PARAMETERS[a]

Material in storage	Silt Content (%)	Moisture content[b] (%) L.I.	Moisture content[b] (%) L.O.	Mean wind speed[c] (mph)	Percentage wind speed > 12 mph[c] (%)	Dry days per year[c] (days)	Duration of storage[d] (days)	Effective loader capacity (cu. yd) L.I.	Effective loader capacity (cu. yd) L.O.	Activity factor[e] L.I.	Activity factor[e] T.	Activity factor[e] W.E.	Activity factor[e] L.O.
Coal													
Low volatility	5.5[f]	8.6	6.9	8.6	24	295	60	6	6	1.0	0.5	1.0	1.0
High volatility	2[e]	8.6	6.9	8.6	24	295	60	6	6	1.0	0.5	1.0	1.0
Iron Ore													
Ore fines	18.8[e]	4.0	3.2	8.6	24	295	18	6	6	1.0	0.5	1.0	1.0
Coarse ore	9[e]	6.0	4.8	8.6	24	295	30	6	6	1.0	0.5	1.0	1.0
Coarse ore, blast furnace	9[e]	6.0	4.8	8.6	24	295	180	10	10	1.0	0	0.5	1.0
Clean-up ore	9[e]	7.1	5.7	8.6	24	295	30	6	6	1.0	0.5	1.0	0
Blended ore beds	14.7[f]	8.2	8.2	8.6	24	295	5	g/	g/	1.0	0	1.0	0.2
Stone materials													
Reclaim limestone	1.5[e]	3.0	2.4	8.6	24	295	90	6	6	1.0	0.5	1.0	1.0
Fine (screened) limestone	1.5[e]	3.0	2.4	8.6	24	295	90	6	6	1.0	0.5	1.0	1.0
Fine limestone	1.5[e]	3.0	2.4	8.6	24	295	90	6	6	1.0	0.5	1.0	1.0
Fine (screened) dolomite	1.5[e]	3.0	2.4	8.6	24	295	90	6	6	1.0	0.5	1.0	1.0
Fine dolomite	1.5[e]	3.0	2.4	8.6	24	295	90	6	6	1.0	0.5	1.0	1.0
Limestone	1.5[e]	3.0	2.4	8.6	24	295	90	g/	6	1.0	0.25	1.0	1.0
Dolomite	1.5[e]	3.0	2.4	8.6	24	295	90	g/	6	1.0	0.25	1.0	1.0
Miscellaneous													
Petroleum coke	1[e]	2.0	1.6	8.6	24	295	60	6	6	1.0	0.5	1.0	1.0
Fine coke breeze	7[e]	2.0	1.6	8.6	24	295	30	6	6	1.0	0.5	1.0	1.0
Flue dust	14[f]	8.0	6.4	8.6	24	295	90	6	6	1.0	0.5	1.0	1.0
Coke, blast furn	1.5[e]	1.0	0.8	8.6	24	295	90	10	10	1.0	0	0.5	1.0
Sinter, blast furn	1.5[e]	1.0	0.8	8.6	24	295	90	10	10	1.0	0	0.5	1.0

a/ L. I. = load-in, T. = traffic, W.E. = wind erosion, L.O. = load-out.

b/ All moisture values are assumed by MRI based on limited field measurements.

c/ Obtained from Climatic Atlas.[5]

d/ Obtained from plant personnel.

e/ Assumed value by MRI.

f/ Determined by means of dry sieving.

g/ Stacker (L.I.) or mechanical reclaimer (L.O.) utilized.

Reproduced from best available copy.

TABLE 4-15. PLANT C: OPEN AREA EMISSIONS

Source extent		Correction parameters				Emissions*	
Total plant area (acres)	Effective open area (acres)	Soil erodibility (tons/acre/year)	Surface soil silt content (%)	Wind speed	PE Index	Emission factor (lb/acre/year)	Yearly emissions (tons/year)
639[a/]	10[b/]	47[c/]	15[c/]	27[d/]	38[e/]	6,000	30

a/ Obtained from plant personnel.

b/ Effective open area that area which is unsheltered by nearby buildings.

c/ Assumed value by MRI based on slag ground cover

d/ Percentage of the time the wind speed is greater than 12 mph.

e/ Thornthwaite's P-E Index.

* All emissions are based on particulates less than 30 μm in diameter.

TABLE 4-16. PLANT C· SUMMARY OF OPEN DUST SOURCE EMISSIONS

	Major dust contributors	
	Suspended particulate emissions (tons/yr)	Percentage of total
1. Unpaved Roads	150	13
2. Paved Roads		
Dusty paved	340	29
Other paved	430	37
3. Exposed area - wind erosion	30	3
4. Storage piles		
Coal	24	2
Iron ore	120	10
Stone materials	25	2
Other materials	44	4
Total all open sources	1,160	100%

4.4 SURVEY RESULTS FOR PLANT D

This section presents the results of a survey of open dust sources at a representative iron and steel plant, designated as Plant D. Survey results and procedures are given below for each source category.

4.4.1 Vehicular Traffic

Table 4-17 lists source extent, emission factor correction parameters, and calculated emission rates for specific unpaved roads lying within the property boundaries of Plant D. The plant had no paved roads within its boundaries.

The experimentally determined emission factors for unpaved roads given in Table 4-1 were used to calculate fugitive dust emissions. The appropriate measure of source extent is vehicle-miles traveled.

Source Extent--

The following steps were used to develop the inventory of roads, vehicle types, and mileage traveled:

1. Unpaved road segments with specific surface and traffic characteristics were identified by plant personnel, and the length of each segment was determined from a map of the plant.

2. The types and sizes of the vehicles traveling on unpaved roads were specified by plant personnel.

3. Figures on the daily mileages traveled by each vehicle type were furnished by plant personnel.

All of the roads at Plant D boundary are slag surfaced. As indicated in Table 4-17, total unpaved road mileage within the plant is 10.6 miles. These roads were indicated to be in good condition throughout the plant and to be regularly maintained.

Vehicular traffic at Plant D was comprised of three basic vehicle types:

* Type A - light duty, 36 vehicles (automobiles and pick-up trucks with 3-ton average weight).

* Type B - medium duty, 22 vehicles (flatbeds and other medium-sized trucks with 15-ton average weight).

* Type C - heavy duty, 6 vehicles (larger trucks with 30-ton average weight).

TABLE 4-17. PLANT D: ROAD EMISSIONS

Roads	Source extent: Road length (miles)[a]	Source extent: Vehicle miles traveled (miles/day)[b]	Source extent: Vehicle class (light duty A, medium duty B, heavy duty C)	Correction parameters: Vehicle weight (tons)[c]	Correction parameters: Vehicle speed (mph)[b]	Correction parameters: Dry days per year	Correction parameters: Road surface silt content (%)	Emissions*: Emission factor (lb/VMT)	Emissions*: Yearly emissions (tons/yr)
Unpaved	10.6	720	A	3	20	255	10	2 2	290
	-	493	B	15	20	255	10	8.3	750
	-	120	C	30	15	255	10	10.8	240
Total	10 6	1,333							1,280

a/ Determined from plant map.

b/ Data obtained from plant personnel.

c/ Assumed value.

* All emissions are based on particulates less than 30 μ in diameter.

As indicated by plant personnel, these vehicles travel over all the unpaved roads in the plant. Thus, no specific plant road segments were identified as having higher than average traffic volumes.

Correction Parameters--

Because of adverse weather conditions during the time of the survey, it was not possible to obtain representative samples of road surface dust from which to determine silt content. Therefore, a silt content of 10% for the road surface material was assumed. Average vehicle speed was estimated by plant personnel and the number of dry days per year for the plant locale was determined from the Climatic Atlas.[31]

4.4.2 Storage Pile Activities

Source Extent--

Table 4-18 gives data on the extent of open storage operations involving primary aggregate materials at Plant D. This information was developed from (a) discussions with plant personnel, (b) plant statistics on quantities of materials consumed, and (c) field estimations during the plant survey.

During the survey, weather conditions prohibited the collection of representative samples of the storage materials to be analyzed for silt content. Storage pile silt content values were assumed to be the same as the values obtained for similar materials previously sized at other steel plants.

Table 4-18 also presents the emission factors for the open storage of primary aggregate materials used in Plant D. The rationale for the use of the emission factor expression (Table 4-1) for each operation is given below.

The method of loading onto storage piles at Plant D consisted of utilizing front-end loaders for the coke breeze and screened stone piles; a stacker for the iron pellet piles; and an overhead gantry/clamshell bucket for the screened iron ore, large stone, and for the coal piles. Therefore, Equation (3) from Table 4-1 was used to calculate emissions from load-in using front-end loaders and clamshell buckets, and Equation (4) was used for the stacker.

Vehicular traffic around storage piles at Plant D was generally less intense than traffic around emission-tested aggregate storage piles, consisting of truck and high-loader movements associated with load-in and load-out. Stored aggregate materials assigned a reduced traffic-related activity factor were:

Screened iron ore: $K = 0$ (no vehicular traffic)

Iron ore pellets: $K = 0.25$

TABLE 4-18. PLANT D. STORAGE PILE EMISSIONS

Material in storage	Source extent: Amount in storage (tons)[a]	Source extent: Annual throughput (million tons)	Emission factors*: Load in (lb/ton stored)	Emission factors*: Vehicular traffic (lb/ton stored)	Emission factors*: Wind erosion (lb/ton stored)	Emission factors*: Load out (lb/ton stored)	Emission factors*: Total storage cycle (lb/ton stored)	Yearly emissions (tons/year)
Low volatility coal	25,000	0.05	0.0001	0.099	0.66	0.0004	0.76	19
High volatility coal	30,000	0 06	0.0001	0 036	0.48	0.0001	0.51	16
Iron ore pellets	50,000	1.8	0.034	0.23	0 017	0.054	0.34	310
Screened iron ore	66,600	0.4	0.001	b/	0.76	0.002	0.76	150
Coke breeze	40,000	0.04	0.018	0.50	0.42	0.029	0.97	20
Screened limestone/ dolomite	5,000	0.14	0.024	0.65	0.078	0.037	0 79	55
Dolomite stone	12,000	0.04	0.002	0.027	0.045	0.003	0.078	2
Total	216,000	2.53						570

a/ Data obtained from plant personnel.

b/ Determined negligible.

* All emissions are based on particulates less than 30 μ in diameter.

Coal: K = 0.25

Large stone: K = 0.25

The coke breeze and screened stone storage piles at Plant D were worked in a manner similar to the emission-tested aggregate and were thus assigned a K-factor of 1.

Equation (6) in Table 4-1 was used to calculate emissions from wind erosion of storage piles at Plant D. The emission factor for wind erosion from iron ore pellet piles was multiplied by 0.2 to account for the lack of saltation size particles required for the erosion process.[32]

The methods of loading-out (reclaiming) from the piles at Plant D consisted of utilizing either a front-end loader pick-up and drop into a conveyor bin (coal, ore pellets, coke breeze, and stone piles) or a gantry/clamshell removal and dump into a rail hopper car (iron ore) which released the material onto an underground conveyor. Equation (7) in Table 4-1 was used to calculate emissions from load-out.

Correction Parameters--

Values for aggregate silt content and moisture content were obtained from laboratory analysis of samples of stored materials or were estimated. Duration of storage for each material was estimated by plant personnel. Loader bucket sizes were estimated by MRI personnel. Climatic correction parameters (mean wind speed = 9.3 mph, dry days per year = 255, and percentage of time that the wind speed exceeds 12 mph = 25) were obtained from the Climatic Atlas.[31] These correction factors are given in Table 4-19.

4.4.3 Wind Erosion of Exposed Areas

Unsheltered areas of exposed ground around plant facilities are subject to atmospheric dust generation by wind erosion, whenever the wind exceeds the threshold velocity of about 12 mph.[12] The exposed ground area within the boundaries of Plant D was estimated to be 10% of the plant property, based on discussions with plant personnel during the plant survey. To account for the sheltering effect of buildings, the effective exposed area was taken to be 7.5% of the plant property.

As indicated in Table 4-1, the parameters which influence the amount of dust generation by wind erosion are surface erodibility, silt content of the surface material, P-E Index, and fraction of the time wind speed exceeds 12 mph. The soil erodibility factor (47) and the surface silt content (15%) were derived from previous sieving of similar surface soil materials at another steel plant. Thornthwaites P-E Index for Plant D was determined to be 93.[29] Finally, the value for the fraction of time the wind speed was greater

TABLE 4-19. PLANT C: STORAGE PILE CORRECTION PARAMETERS[a]

Material in storage	Silt content (%)	Moisture content[b] L.I.	Moisture content[b] L.O.	Mean wind speed[c] (mph)	Percentage wind speed >12 mph[c] (%)	Dry days per year (days)[c]	Duration of storage (days)[d]	Effective loader capacity (cu. yd) L.I.	Effective loader capacity (cu. yd) L.O.	Activity factor[e] L.I.	Activity factor[e] T	Activity factor[e] W.E.	Activity factor[e] L.O.
Low volatility coal	5.5[e]	7.0	6.0	9.3	25	255	180	10	6	1.0	0.25	1.0	1.0
High volatility coal	2[e]	7.0	5.6	9.3	25	255	360	10	6	1.0	0.25	1.0	1.0
Iron ore pellets	13[e]	1.0	0.8	9.3	25	255	10	[f]	6	1.0	0.25	0.2	1.0
Screened iron ore	19[e]	5.0	4.0	9.3	25	255	60	10	10	1.0	0	1.0	1.0
Coke breeze	7[e]	1.0	0.8	9.3	25	255	90	6	6	1.0	1.0	1.0	1.0
Screened limestone/ dolomite	9[e]	1.0	0.8	9.3	25	255	13	6	6	1.0	1.0	1.0	1.0
Dolomite stone	1.5[e]	1.0	0.8	9.3	25	255	45	10	10	1.0	0.25	1.0	1.0

a/ L.I. = load-in, T = traffic, W.E. = wind erosion, L.O. = load-out.

b/ All moisture values are assumed by MRI based on limited field measurements

c/ Obtained from Climatic Atlas.[31]

d/ Obtained from plant personnel.

e/ Assumed value by MRI.

f/ Stacker (L.I.) or mechanical reclaimer (L.O.) utilized.

than 12 mph (25%) was obtained from weather records.[31/] The results from wind erosion of Plant D's exposed areas are presented in Table 4-20.

4.4.4 Summary of Dust Emissions

A breakdown of calculated emissions from open dust sources at Plant D is presented in Table 4-21. The largest contributing sources were unpaved roads (68%). Emissions from plant storage piles were next in magnitude (30%). Wind erosion of exposed areas was relatively insignificant.

TABLE 4-21. PLANT D: SUMMARY OF OPEN DUST SOURCE EMISSIONS

	Major dust contributors	
	Suspended particulate emissions (tons/yr)	Percentage of total
1. Unpaved Roads	1,280	68
2. Wind erosion - exposed areas	38	2
3. Storage piles		
Low-high volatility coal	35	2
Iron ore pellets	310	16
Screened iron ore	150	8
Coke breeze	20	1
Stone piles	57	3
Total all open sources	1,890	100%

TABLE 4-20. PLANT D: OPEN AREA EMISSIONS

Wind erosion	Source extent: Total plant area (acres)	Source extent: Total exposed area (acres)	Source extent: Effective exposed area (acres)	Correction parameters: Soil erodibility (tons/acre/yr)	Correction parameters: Surface soil silt content (%)	Correction parameters: Wind speed	Correction parameters: P-E Index	Emissions*: Emission factor (lb/acre/yr)	Emissions*: Yearly emissions (tons/yr)
Plant D open areas	1,100 a/	110 a/	83 b/	47 c/	15 c/	25 d/	93 e/	920	38

a/ Data obtained from plant personnel

b/ That area which is unsheltered by nearby buildings.

c/ Assumed value by MRI based on slag ground cover.

d/ Percentage of the time the wind speed is greater than 12 mph

e/ Thornthwaites' P-E Index.

* Based on particulates less than 30 μm in diameter

SECTION 5.0

CONTROL TECHNOLOGY FOR PROCESS SOURCES

This section presents an assessment of best available control technology for process sources of fugitive emissions associated with integrated iron and steel plants. Information for this assessment was obtained from: (a) published and unpublished literature; (b) knowledgeable personnel within the iron and steel industry and within EPA; (c) surveys of representative iron and steel plants and (d) control equipment manufacturers.

In the sections below, control system options are presented for the following process sources of fugitive emissions:

Steel Making Furnaces

- Electric Arc Furnaces (charging, tapping, slagging and leakage)
- Basic Oxygen Furnaces (charging, tapping, slagging and leakage)

Hot Metal Transfer

Teeming

Other Sources

- Gas Cutting Operations
- Sinter Plants
- Desulfurization Stations

Open hearth furnaces have been excluded from this discussion since these furnaces are gradually being phased out of the industry.

Control options (presented for each source include both emissions capture and particulate removal aspects. Expected performance and cost data are given for each alternative. Some options are based on actual installations while others are promising in concept but have not been demonstrated fully.

Information on existing installations was obtained from the literature and from limited contacts with knowledgeable industry personnel. This information is not meant to represent an industry wide profile of control practices.

To the extent that source operations vary from plant to plant, it is less likely that a single control option would be most suitable for uniform application throughout the industry. Added to this is the need for determining the degree to which individual fugitive sources at a given plant are to be controlled in order to meet plant-specific control strategy objectives. The most cost-effective control strategy for a particular plant entails the application of the most efficient controls to the largest contributing sources.

5.1 ELECTRIC ARC FURNACES

Fugitive emissions associated with an electric arc furnace (EAF) are those unducted emissions which are emitted typically from charging, tapping and slagging. Electrode leakage constitutes a less typical source. When direct shell evacuation (DSE) cannot be used, melt down and refining are also significant sources of fugitive emissions.

Only part of these fugitive emissions actually affect ambient air quality. Excluded is the portion of the fugitive emissions which are too large to escape in buoyant currents through the building roof monitors and which settle back to the shop floor creating a nuisance problem. Most of the emissions classified as fine particulate (particles smaller than 5 μm in diameter) will escape the building monitor and impact the ambient air quality off the plant premises.

Several control options are listed in Table 5-1 and are discussed below. These control options apply solely to the EAF. Other EAF shop sources and their controls are discussed elsewhere in this report.

5.1.1 Option A: Building Evacuation

As shown in Figure 5-1, building evacuation systems use the sealed roof of the melt shop as a collection hood. Buoyant exhaust gases rise from the furnace to the sealed roof. From the roof, ducts draw the dust-laden gases to a removal device. If the removal device cannot handle the volume of gas generated at certain peak periods in the process, the enclosed roof simply acts as a holding chamber until the fumes can be evacuated.

Extent of Application--

Currently, the use of building evacuation systems for EAF emissions is documented for four alloy steel producing facilities.[33,34]

TABLE 5-1. SUMMARY OF EAF CONTROLS

Control	Roof monitor	Furnace type	Type of emission controlled[a]
DSE	Open	Carbon	Primary
DSE + Canopy Hood	Open	Carbon	Primary, Fugitive
DSE + Canopy Hood + scavenger duct at roof	Closed	Carbon	Primary, Fugitive
DSE + Building Evacuation	Closed	Carbon	Primary, Fugitive
Canopy Hood	Open	Alloy	Primary, Fugitive
Canopy Hood + scavenger duct at roof	Closed	Alloy	Primary, Fugitive
Building Evacuation	Closed	Alloy	Primary, Fugitive
Total Enclosure	Open	Carbon	Primary, Fugitive
Tapping and slagging ladle hoods	Open, Closed	Alloy, Carbon	Fugitive
Hooded scrap bucket (conceptual idea)	Open, Closed	Alloy, Carbon	Fugitive

a/ Primary emission - emissions during meltdown.

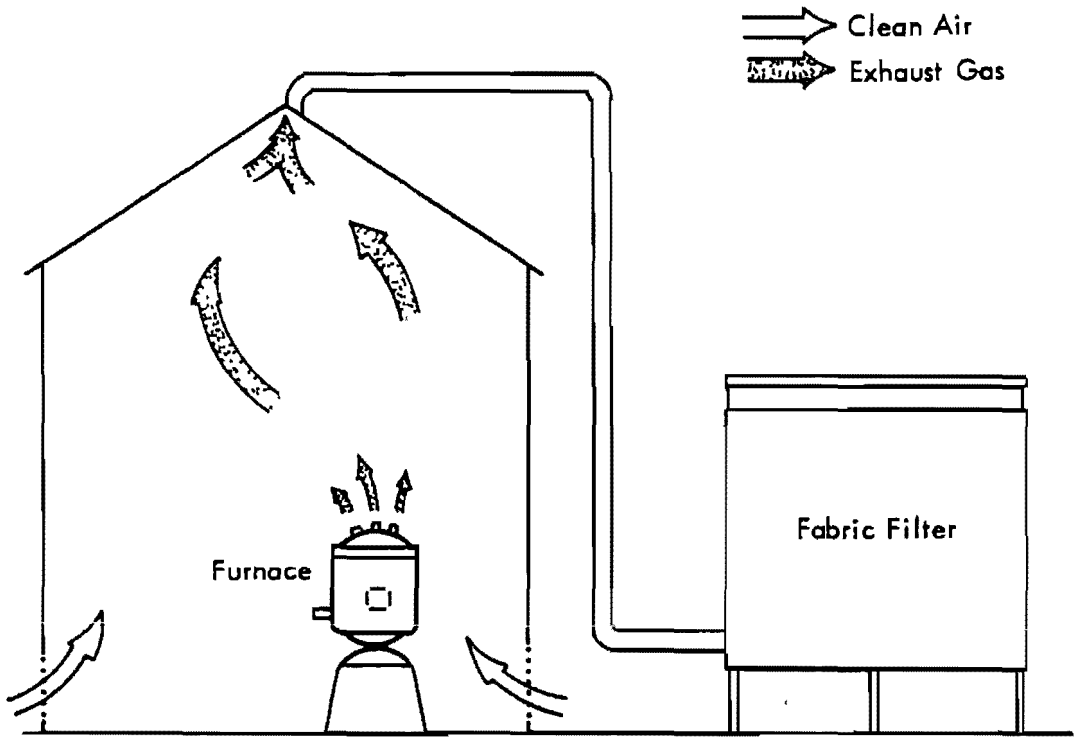

Figure 5-1. Building evacuation system.[35]

Problems Associated with Application--

One very obvious problem with building evacuation is the enormous flow rates involved. This problem is due in part to the need for the building evacuation system to handle not only the fugitive fumes and gases from the EAF but also the natural ventilation required to maintain the workroom environment. Important variables in the workroom environment affected by the flow rate of a building evacuation system are temperature and pollutant concentrations. Pollutant concentrations in the workroom environment are now regulated by the 1970 Threshold Limit Values (TLV's) proposed by the ACGIH and adopted by OSHA.

The first disadvantage of building evacuation is the high flow rate necessary for adequate control. Canopy hoods with an open roof monitor can reduce the flow rate by half for the same furnace size, and canopy hoods with DSE and an open roof monitor can be expected to require 40% of the flow rate that building evacuation would.36/ Canopies use less flow rate than building evacuation because the roof monitor handles the actual building ventilation while the canopy handles only the EAF fumes and gas. Also, because the canopy is closer to the source than the roof monitor, the volume of fumes and gas from the EAF will be minimized since the buoyant gases have less time to diffuse and entrain room air into the plume.

A second disadvantage of building evacuation related directly to the high flow rate is the energy expended to move the air volume. EPA has calculated that a building evacuation system handling 4,000 dscfm/ton of furnace capacity coupled with DSE handling 350 dscfm/ton of furnace capacity will require 37.8 kw-hr of electric energy per ton of furnace capacity. On the other hand, an 80% efficient canopy hood handling 2,000 dscfm/ton of furnace capacity coupled with DSE handling 350 dscfm/ton of furnace capacity only requires 18.9 kw/hr per ton of furnace capacity.36/ This is 50% reduction in energy utilization when compared with building evacuation, and yet the canopy-DSE combination yields the same total emissions (EAF and power plant) as the building evacuation-DSE combination.36/

The third disadvantage of building evacuation is that environmental problems can arise inside the tightly enclosed building if (a) the control equipment malfunctions or (b) the ventilation patterns are such that stagnant spots occur where pollutants can build up. The first problem can be handled with motor-operated louvers in the building monitor. The second problem is a matter of proper design of forced or natural air inlets into the building.

A final disadvantage of building evacuation is that in retrofitting, the design may produce a ventilation rate lower than the shop originally had under natural ventilation conditions. This will reduce the in-shop air quality while improving the ambient air quality.

Control Device Performance--

Source tests were performed by the U.S. EPA on four building evacuation systems utilized to control alloy steel furnaces. Flow rates were found to range from 3,300 dscfm/ton of furnace capacity to 4,200 dscfm/ton of furnace capacity.[33] It was suggested that 5,000 dscfm/ton of furnace capacity would be more representative of the industry as a whole.[37]

Building evacuation systems are nearly 100% efficient. The baghouse to which one of these systems was vented has been quantified as 94% efficient,[38] but MRI expects that 99%+ efficiency is possible.

The maintenance of the capture portion of the building evacuation system is minimal since the capture portion consists simply of an enclosed roof vented through ducting. It is possible that settled dust in the ducting would need to be removed occasionally. The removal portion of the building evacuation system, consisting of baghouse, fans, motors and dust handling equipment, will require routine maintenance such as bag replacement, lubrication, bearing replacement, fan motor replacement and fan housing lining replacement.

Control Device Cost--

Data have been published[39] estimating the cost of a building evaucation system for a shop with three 100-ton furnaces. At 5,000 dscfm/ton of furnace capacity, the fabric filter removal system was estimated to handle 1.5 million scfm. The total installed costs are shown in Table 5-2. Since these data are 1974 cost data, the values were adjusted to reflect escalation using the Chemical Engineering plant cost index. This index has been recommended to handle the inflating costs of air pollution control equipment.[40]

There are some general conclusions that can be gleaned from an analysis of the cost data presented in Table 5-2, but one should not immediately apply these conclusions to the determination of costs for other systems without giving proper consideration to the differences inherent in each system. Adding the gas gleaning equipment cost and the auxiliary equipment cost, the total installed cost for the baghouse and its accessories, as listed in Table 5-2, is approximately $2.50/scfm. The total installed cost of the ductwork as of December 1976 is $0.70/scfm, but this amount is obviously also sensitive to the length, diameter and wall thickness of ductwork required to reach the removal device. There are several other capital investments in addition to the gas gleaning equipment, ductwork, fans and motors which are difficult to generalize about, except to mention that any estimate of total project cost must consider the following: engineering, building modification, ductwork support, site preparation, foundations, piping, electrical and instrumentation.

TABLE 5-2. ESTIMATED TOTAL INSTALLED COSTS--BUILDING EVACUATION (for three 100-ton furnaces and an evacuation rate of 1.5×10^6 scfm)

Investment[a]	June 1973 cost ($)	Inflation multiplier	December 1976 cost ($)
Gas cleaning device		208.3	
BH w/bags	1,969,900	143.0	2,869,400
Subtotal	1,969,900		2,869,400
Auxiliary equipment			
Screw conveyor w/drive	42,500		61,900
Bucket elevator w/drive	7,200		10,500
Dust storage silo	19,800		28,800
Rotating drum rotary valve w/drive	68,100	208.4 / 143.0	99,200
Canopy	90,600		132,000
Blower w/drive	419,000		610,300
Electric vibrators w/drive	3,000		4,400
Subtotal	650,200		947,100
Ductwork, utilities			
Ductwork	738,200	208.3 / 143.0	1,075,300
Piping	1,800	237.4 / 151.7	2,800
Instrumentation	176,500	198.7 / 146.9	238,700
Electrical	786,000	153.4 / 105.2	1,146.100
Lighting	262,000	153.4 / 105.2	382,000
Subtotal	1,964,500		2,844,900
Engineering, overheads, etc.			
Engineering	366,800	153.5 / 129.8	433,800
Indirects	412,600	-	412,600
Start-up	91,700	-	91,700
Spare parts	45,800	-	45,800
Contractors fee	59,600	177.0 / 155.6	67,800
Subtotal	976,500		1,051,700
Total	5,561,100		7,713,100

a/ There are other important capital investments such as building support, ductwork support and site preparation which are not included here.

5.1.2 Option B: Canopy Hoods

Canopy hood capture devices in conjunction with fabric filter removal devices constitute effective systems for (a) primary and fugitive emissions from alloy furnaces, (b) fugitive emissions from carbon steel furnaces using DSE and (c) primary and fugitive emissions in carbon steel shops without DSE. Canopy hoods can be employed with either open or closed roof openings. When roof openings are closed, a scavenger system is used to remove emissions that collect in the roof area. Figure 5-2 depicts a canopy hood control system coupled with a novel application of an enclosure, not typically found in conjunction with a canopy hood.

The major advantage of the canopy system is that it can be operated with less air volume than is required for building evacuation because it is nearer to the source. This reduced volume requires a less costly initial investment and results in reduced operating costs. However, if not operated at a sufficient flow rate to handle peak emission of gases and fumes, canopy hoods with open roof monitors are less efficient in capturing emissions than are building evacuation systems.

Extent of Application--

There are nine separate operating installations documented as having canopy hood systems.[33,41] These 12 systems represent 25 to 30% of the existing canopy hood systems applied to EAFs. Three other systems were located during the course of this research project. The operating characteristics of these example systems are shown in Table 5-3.

Problems Associated with Application--

When canopy systems are not sized to handle peak generation of fumes and gases, part of the plume escapes the canopy and gathers in the roof. If the monitors are open, the emission escapes; if the monitors are closed, the emission is collected by a scavenger system. Crosscurrents may also cause the plume to move from under the canopy, causing something less than 100% capture efficiency.

Finally, retrofitting a canopy hood may present problems simply from a space point of view. Generally, for a top charged furnace, a distance of at least 30 to 40 ft is necessary between the top of the furnace and the bottom of the canopy to allow for charging or tapping crane clearance. There could be situations in which the space between the top of the crane and the nearest overhead obstruction would not be adequate for canopy installation.

Control Device Performance--

Actual flow rates for canopy hoods have been measured in a range from 1,500 to 8,000 dscfm/ton of furnace capacity. The capture efficiency of the canopy system is not known quantitatively, but visual estimates have placed

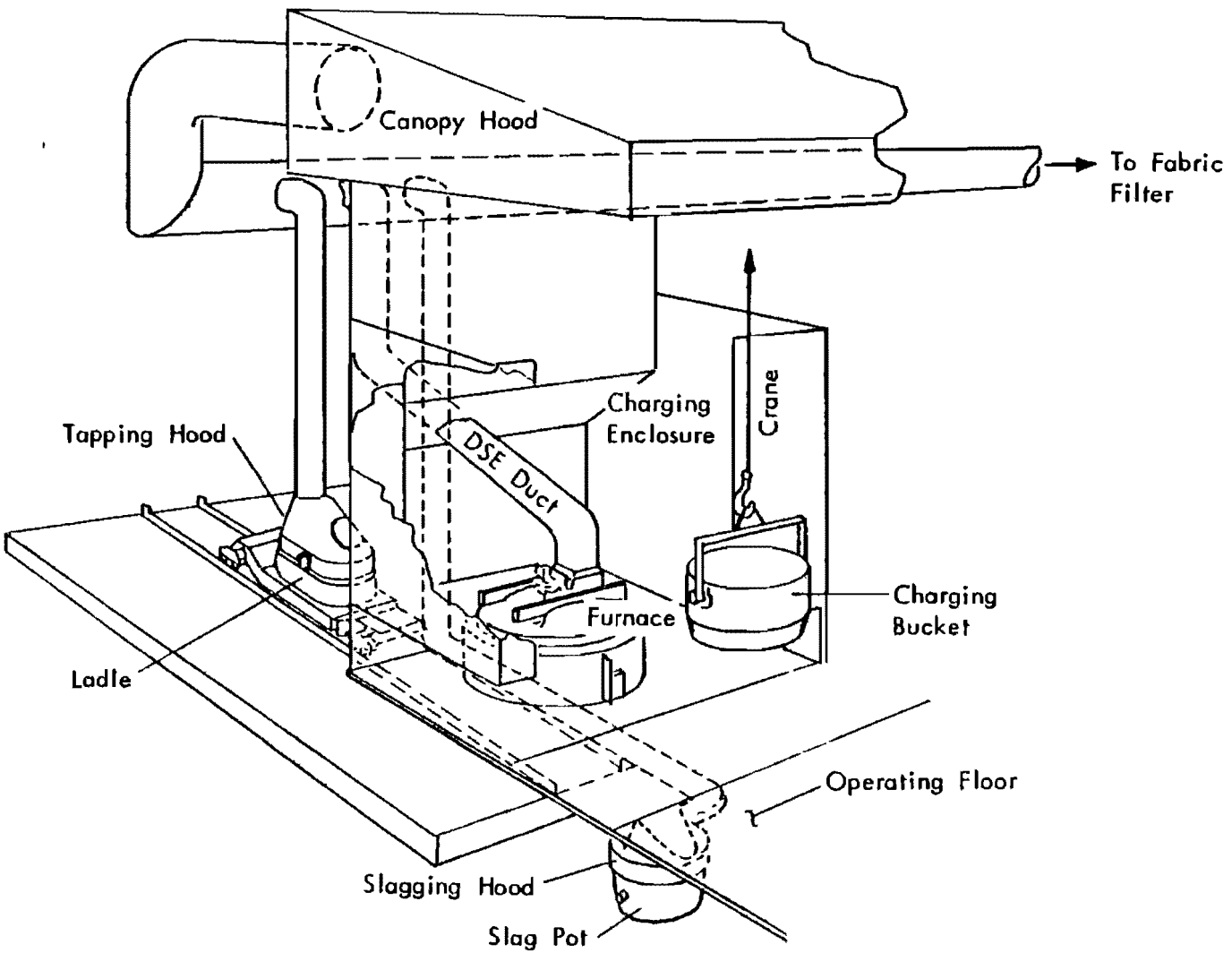

Figure 5-2. EAF canopy hood system.

TABLE 5-3. IDENTIFICATION OF EXAMPLE CANOPY HOODS SYSTEMS ON ELECTRIC ARC FURNACES

Plant identification	Number and size (tons) of furnaces in operation	Roof	Total system capacity (acfm)	Gas temp. at baghouse inlet (°F)	Reference
Plant C[a]	2/100,1/75	Open	598,000	170	32
Plant F	NA[b]	Open	NA	NA	32
Plant M	2/100	Open	244,500	118	32
Plant G	2/120	Closed	NA	NA	32
Plant E (under construction in 1974)	1/150	Closed	NA	NA	32
Plant L	NA	Closed	NA	NA	32
Plant H	NA	Closed	NA	NA	32
Plant B	5/15	Closed	NA	NA	32
J & L at Warren, Mich.	5/65,1/30	NA	700,000	175	39
Unidentified	2/220	NA	630,000 (scfm)	NA	NA
Unidentified	4/170	NA	2,100,000	250	NA
Unidentified	2/116,2/170	NA	900,000	NA	NA

a/ Not the same plant C of Section 4 surveyed for open dust sources.

b/ NA = Not available.

it between 50 and 90%.[42] The canopy hoods on the alloy furnaces at J&L's Warren facility were guaranteed to collect at least 65% of the combined primary and fugitive emissions. This value was verified by both visual observation and comparison of the dust captured by a DSE on a similar-sized furnace (assuming 100% capture) and the dust captured by the canopy.

Control Device Cost--

The total capital investment for a canopy system is sensitive to several variables, including the total flow rate handled by the system. In this section, cost data for system flow rates ranging from 440,000 scfm to 2,100,000 acfm are presented. The first new system to be considered here handles a flow rate of 440,000 scfm.[43] This was a proposed system and it may not have been built and actually used. The cost estimate made in 1974 was $1.5 million for baghouse, ducting, installation of hoods and enclosing of monitors. In addition, the cost for building modification to support ductwork and hoods was estimated at $0.75 million. The cost was not a firm bid as evidenced by the fact that other major items such as engineering and contractor's fees were not included.

The second system to be considered handles a flow rate of 750,000 scfm for a three 100-ton furnace.[39] This was a theoretical system developed solely for cost analysis purposes. The costs for this system are listed in Table 5-4. Certain general conclusions can be drawn concerning the cost of this specific system. In December 1976, the installed cost for the baghouse and auxiliary equipment was $3.25 scfm, while the total installed cost for the ductwork and utilities was $2.70 scfm.

The last system to be considered is capable of flow rates of 2,100,000 acfm. This is a retrofit system and it is now in operation. The system was designed to handle emissions from one shop with four 170-ton EAF's. The costs of separate components of this system are shown in Table 5-5.

Some general conclusions that can be gleaned by studying the cost breakdown in Table 5-5 are: the baghouse cost in December 1976 was $1.70/acfm; the auxiliary equipment cost $0.80/acfm and the hoods and ductwork cost $1.50/acfm to purchase and install. The overall project cost was $7.20/acfm.

5.1.3 Option C: Total Enclosure

Total enclosure, which consists of completely enclosing the furnace down to the operating floor, is a very recently applied technology for controlling fugitive emission from EAF's. The technology of total enclosure had its origin in BOP (Basic Oxygen Process) and QBOP furnace emission control applications, but it has been successfully applied to EAF's by Obenchain Corporation. The enclosure captures all charging, meltdown and refining emissions. The tapping ladle is moved to the furnace by railcar, and emissions from this source are

TABLE 5-4. ESTIMATED TOTAL INSTALLED COSTS--CANOPY HOODS AND REMOVAL SYSTEMS[a] (for three 100-ton alloy furnaces and a flow rate of 750,000 scfm)

Investment[b]	June 1973 cost ($)	Inflation multiplier	December 1976 cost ($)
Baghouse	1,246,200	208.3 / 143.0	1,815,300
Auxiliary equipment	440,300	208.4 / 143.0	641,400
Ductwork, utilities	1,321,400	217.0 / 141.8	2,022,200
Engineering, overhead	700,900	153.5 / 129.8	828,900
Total	3,708,800		5,307,800

a/ No DSE.

b/ Does not include structural support for the ductwork or building or site preparation.

TABLE 5-5. ACTUAL TOTAL INSTALLED COSTS--CANOPY HOODS AND REMOVAL SYSTEM (for four 170-ton carbon steel furnaces and a flow capacity of 2,100,000 acfm)

Investment	April 1975 cost ($)	Inflation multiplier	December 1976 cost ($)
Dust collector			
Baghouse			
Concrete work	3,198,000	212.5	3,521,000
Auxiliary ducts, feeders		193.0	
Auxiliary equipment			
5 Fans and accessories			
1 Motor a/	967,000	212.5	1,719,000
Concrete work		193.0	
Dust conveying system	259,000		
Pelletizing unit	335,000		
Hoods and ductwork			
Ductwork-original	$1,900,000		
Ductwork-modified			
Hoods			
Painting	1,016,000	208.3	3,170,000
Dampers		191.6	
Expansion joints			
Engineering			
Engineering design	1,385,000	153.5	1,511,000
		140.7	
Building structure and support			
Modify existing building	150,000		
Additions to existing structure	1,075,000	192.9	3,413,000
Ductwork support structure	1,880,000	175.5	
Contractor's fee	313,700	177.0	333,000
		166.6	
Construction overhead	257,000	-	257,000
Electrical	437,000	153.4	474,000
		141.4	
Subtotal	13,172,700		14,398,000
Other	762,300		762,300
Total	13,935,000		15,160,300

a/ Bought only one motor since four were on hand.

controlled by a stationary tapping ladle hood. The stationary tapping ladle is discussed in this report as a separate control option. DSE is not required with total enclosure.

Charging with a total enclosure surrounding the furnace presents a formidable but not insurmountable design problem. Doors are installed through which a clamshell scrap bucket can enter. There is a slot in the top of the enclosure to allow crane cable clearance. After the crane and the bucket enter the enclosure, the doors are closed and an air curtain is engaged across the crane cable clearance slot. The primary evacuation ducts in the top of the enclosure can then capture nearly 100% of the charging emissions.

Extent of Application--

Based on the limited survey conducted, only one operation is known to be using total enclosures on EAF's. The operation consists of two 65-ton furnaces. This entire shop was a new design, not a retrofit. The shop has been operating since June 1976.

Problems Associated with Application--

The retrofitting of a control device such as a total enclosure may not be possible in a majority of cases, but the application merits investigation. The advantages could override the disadvantages such as operational changes. For new designs, however, this device should be investigated since it yields high efficiency at low flow rates and consequently offers low costs.

Control Device Performance--

The specific enclosure surveyed is made of unlined, 1/16-in. steel sheeting. Installation time was approximately 2 weeks per furnace enclosure. The removal system has a capacity of 150,000 scfm, and the temperature inside the enclosure averages 150°F. This is a very low flow when one considers that nearly 100% of the meltdown, refining, charging, tapping, slagging and electrode leakage emissions are captured. Not all of the flow capacity is used continuously; for example, during meltdown only 70,000 scfm is utilized.

Control Device Cost--

The purchase cost was $200,000 each for the particular total enclosure considered in this report.

5.1.4 Option D: Tapping Ladle Hoods

A relatively recent innovation in tapping emissions control is the tapping ladle hood. When tapping from an EAF with a tapping hood, the ladle must be moved to the furnace on a railcar. The tapping hood is stationary and the railcar moves the ladle underneath the hood. The hood extends a little below the top of the ladle on every side except the side on which the ladle enters the hood, and there is one slot in the top through which the metal is poured.

The increased tilting of the furnace during tapping requires that the car advance the tapping ladle forward. In one case, the advance is 3-1/2 ft from the beginning to the end of the tap.

Extent of Application--

There are two known applications of this method to tapping emissions, but the same method has also been applied successfully to at least two known hot metal transfer stations. These latter two applications are discussed in detail in another section.

Problems Associated with Application--

As with all controls mounted close to the source, there are potential operating problems. Care must be taken not to run the ladle into the back of the hood. Also, the slot in the top must be designed with sufficient clearance between it and the molten steel stream to allow for fluctuations. These problems are very elementary, but they have indeed occurred.

Device Performance--

The flow rates necessary to control tapping emissions alone are unknown for the particular installations now operating, but for hot metal transfer stations, a hood closed on all sides and with a hole only in the top has required approximately 50,000 scfm to vent emissions properly. Of course, the flow rate depends on the volume of metal tapped. This will be discussed further in the hot metal transfer section below.

Control Device Cost--

The costs of tapping ladle hoods are unknown at this time.

5.1.5 Option E: The Hooded Scrap Bucket

For emissions from the top charging of scrap from a clamshell bucket into an EAF, a hooded scrap bucket has been proposed. This idea is still in the conceptual stages and has not yet been applied. In operation, the covered scrap bucket rests on the furnace to provide a seal. Since the top of the bucket is covered, the emissions are vented from a duct in the side of the bucket. While the bucket is resting on the furnace, the duct from the bucket can be connected with a mated stationary duct. This stationary duct can be vented to the main gas cleaning system. Plants are considering the technique, but as yet no one has installed this option.

5.1.6 Option F: Process Modifications

A process change which could alleviate charging emissions would be to charge cleaned scrap. This could be accomplished by passing the scrap through an induction furnace where any oily coatings would be volatalized. The induction furnace provides an atmosphere more easily controlled than an EAF with the roof removed.

Another process change which has potential to alleviate charging emissions is the charging of direct reduced iron ore. Like cleaned scrap, this presents the advantage of introducing a cold metal into the EAF free of dirt and oily deposits. This direct reduced ore could be charged with the conventional clamshell bucket or through a chute leading to a hole in the EAF roof.

Finally, another process change which could reduce emissions is to shred the scrap and charge it through a chute into the EAF. With the chute charging system, the DSE could remain on during charging to capture any emissions. This method of charging also opens up the possibility of continuous instead of batch steel making.

5.2 BASIC OXYGEN FURNACES

Sources of fugitive emissions in basic oxygen furnace (BOF) operations are the charging, tapping and slagging processes. Other minor sources include puffing from the furnace and the handling of fluxes at the conveyors and bins. Primary emissions during blowing are captured by a hood directly over the mouth of the furnace. This hood can be tight fitting, in which case combustion of CO is suppressed, or the hood can be positioned so that air space is available. The advantages of suppressed combustion hoods over open hoods include a higher capture efficiency, a smaller volume of gas at a lower temperature, and consequently, a lower removal device cost. The secondary emission control techniques to be discussed in this section are (a) monitor enclosing, (b) canopy hoods, (c) total enclosures, and (d) novel uses of the primary hood for fugitive emissions control.

5.2.1 Option A: Monitor Enclosing

This method utilizes the closed roof monitor as a holding chamber for fugitive emissions convected upward. This monitor is then evacuated at the convenience of the operator. As with building evacuation in EAF control, the removal system must be sized to handle ventilation air necessary for shop safety.

Extent of Application--

Only one plant is known to have considered this method to supplement a canopy hood and open monitor system. But the enclosing of the monitor was supplanted by the decision to totally enclose the furnace, an option which is considered separately below.

Problems Associated with Application--

One of the major problems with monitor enclosure is that the evacuation system must necessarily handle a large volume of air since the natural ventilation air passes through the removal system.

Control Device Performance--

Since there are no known applications of the control option, details of performance are not available. But one positive performance trait would be a nearly 100% capture efficiency during normal operations, because of the enclosed building.

Control Device Cost--

As stated, exact cost figures are not available, but general categories of cost can be delineated as follows: (a) building support, (b) steel sheeting for monitor enclosure, (c) ductwork, (d) ductwork support, (e) fans, (f) motors, (g) removal device, (h) engineering, and (i) contractor's fee.

5.2.2 Option B: Canopy Hoods

While the use of canopy hoods to control fugitive emissions from EAF's is a well-known technique, their application to BOF's is relatively new. Retrofitting of this control option would certainly be difficult, but specific situations do exist where retrofitting would be feasible.

Extent of Application--

This control option is known to exist at at least two plants. One system is documented, but the other is not. The undocumented canopy hood system was not successful, as the emissions not captured by the canopy were leaving the monitor in sufficient quantities to exceed the opacity standards. The Inland Steel installation is documented in the literature[44,45] and is shown in Figure 5-3. Inland has not reported any deficiencies in their charging aisle canopy operation. Actually, Inland's canopy hood is a backup hood that captures the charging emissions that escape local charging hoods mounted near both 210-ton BOFs. This dual system may be the reason for the apparent success of the roof canopy.

Problems Associated with Application--

As with all elevated hoods, the diversion of the plume from the hood by crosscurrents within the building can be detrimental. The diversion can be alleviated by adding baffles and constructing walls to beneficially direct building currents where this action does not severely disrupt operations.

Control Device Cost--

The Inland shop reportedly draws 275,000 scfm through the charging aisle canopy hood. As with the canopy hoods in EAF shops, 50 to 90% capture efficiency is expected. The emissions collected by the canopy hood are combined with emissions from two hot metal transfer stations and are vented to a 400,000-scfm baghouse.

Control Device Cost--

No information is available on the costs of the two known systems.

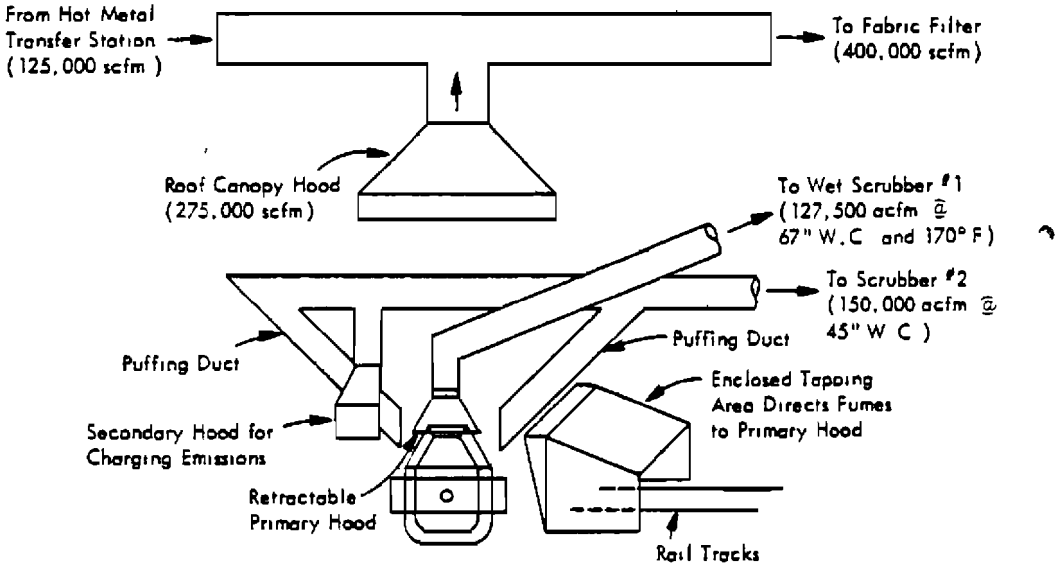

Figure 5-3. BOF canopy hood system.[44,45]

5.2.3 Option C: Partial and Total Enclosures

Enclosure is a new technology that was first applied at the Krupp-Rheinhausen plant in West Germany. This technology was first brought to the United States by Pennsylvania Engineering Corporation in cooperation with Baum Company to cope with the unique problems of charging of QBOPs. The QBOP process requires that nitrogen be blown through the tuyeres in the bottom of the vessel to keep them from plugging during hot metal charging. The nitrogen bubbling through the hot metal causes tremendous charging emissions. There is not a known QBOP in the United States that does not have a partial or total enclosure. The partial enclosure extends only to the charging floor while the total enclosure extends all the way to the tapping floor, which is at ground level for these newly designed installations. Figure 5-4 depicts a total enclosure.

Extent of Application--

There are at present seven known and operating QBOPs in the United States that have either partial or total enclosures. In addition, total enclosures are presently being constructed around five BOFs at three different steel plants. One of these plants is retrofitting the enclosures. The advantages of this control option are achievement of 90% efficiency,[22] providing that proper operating procedures are followed, and a definite, substantial decrease in operating flow rate.

Problems Associated with Application--

One of the obvious problems with total enclosure is operations interference. Charging requires more care than that needed before enclosing the installation to avoid collisions between the ladle and the enclosure. Tapping requires a different procedure than used in many plants since a railcar and not the teeming crane carries the teeming ladle to the BOF.

A problem with these enclosures in the past has been the placement outside the enclosure of the secondary hood to capture charging emissions. This proved to be ineffective as emissions still escaped around the hood. The later generation of enclosures have the secondary ventilation charging hood inside the enclosure.

A problem with partial enclosures exists that the total enclosure has solved. With partial enclosures (extending only to the charging floor), there are no walls between the charging and the tapping floors to enclose slagging and tapping emissions. Consequently, a portion of these emissions escape around the enclosure. The total enclosure with automatic doors to permit car ingress and egress provides a solution.

Control Device Performance--

For one specific 120-ton vessel with a total enclosure under construction around it, the design flow rate necessary for evacuation is 382,000

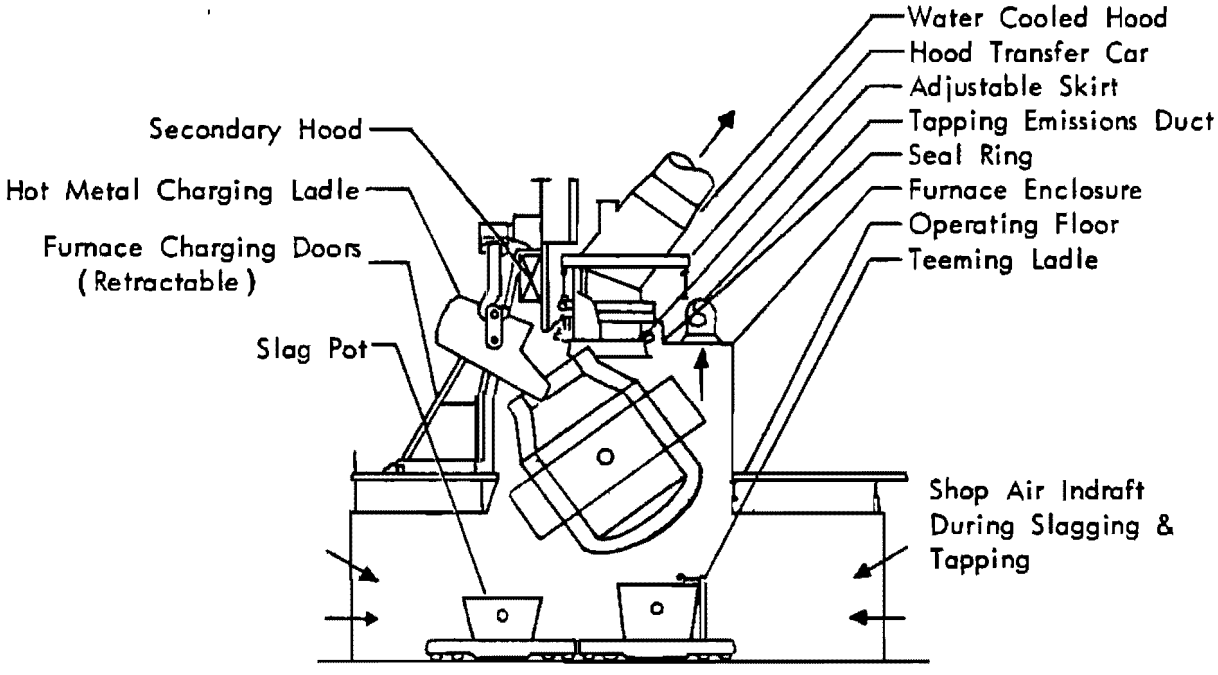

Figure 5-4. BOF total enclosure.[22]

acfm. With 140,000 acfm needed as dilution air to achieve temperatures compatible with the baghouse, the total flow is 522,000 acfm. As was previously stated, efficiencies of 90% can be expected providing proper operating procedures are utilized. The proper procedures include pouring the hot metal into the furnace at an optimum rate and the utilization of comparatively clean scrap.22/

Control Device Cost--

For the purchase of a total enclosure for a 200-ton BOF, one could expect to pay from $600,000 to $700,000 in December 1976. The total installed cost could be between $1,000,000 and $1,100,000. An itemized cost breakdown is not available, but there are items involved that could be easily overlooked, such as heat resistance lining for the enclosure and automatic doors.

5.2.4 Option D: Novel Uses of the Primary Hood

The primary emission control hood on the BOF has recently been utilized in the capture of both charging and tapping emissions. In some applications, changes in either the hood design or operating procedure were required, while in other applications, additions such as baffles were necessary.

One new design which has a patent pending is the Gaw Damper. Briefly, this is a wheeled damper which enables the hood's suction to be focused on either the charging or the tapping side of the furnace. The damper is simply rolled beneath that portion of the primary hood's face which the operator wishes to block. Another designer has added baffles on the tapping side to guide the emissions in the direction of the primary hood. A third method minimizes the tilt of the furnace during charging and utilizes a ladle with a uniquely long spout. This operating change places the mouth of the furnace closer to the primary hood.

Extent of Application--

At least four plants are known to be using the Gaw Damper, but little is known of the success of this system. The minimizing of the furnace tilt during charging has been applied at only one known plant, and the use of baffles during tapping has been applied at two known plants. As with all methods mentioned in this report, several other instances of application may exist which were not surveyed during the course of the study.

Problems Associated with Application--

Two plants have had problems with the Gaw Damper when the tracks warped because they were designed too close to the furnace mouth. Little is actually known about the day-to-day success of the other techniques. However, there are problems that can be anticipated in their application. The reduction of the furnace tilt during charging, while it does move the mouth closer to the

primary hood, cannot possibly put the BOF mouth directly under the hood. Consequently, it is likely that a portion of the charging fumes will still escape capture and rise into the building monitor. With baffles or an enclosure on the tapping side, interference with the tapping operation may be created. This particular problem may be alleviated by moving the tapping ladle in underneath the baffle by railcar or by installing biparting baffles which allow crane cables through.

Control Device Performance--

In one operation, the application of the Gaw Damper increases the face velocity of the primary hood flow from 200 to 900 fpm. The damper actually blocks more than three-fourths of the primary hood face area and thus serves dual purposes. First, the velocity is increased, effecting greater capture efficiency; and second, the flow is concentrated at the area of most need, either the charging or tapping side of the furnace.

Control Device Cost--

Little is known of the cost of these devices.

5.3 HOT METAL TRANSFER

Hot metal transfer is the movement of molten iron from a torpedo car directly to a charging ladle or from a torpedo car to a hot metal mixer and then to a charging ladle. This is not to be confused with reladling which is herein defined as the mixing of molten steel from one ladle to another for the purpose of evenly distributing some ladle addition.

Forty-two percent of the emissions from hot metal transfer are in a flake-shaped particulate form called kish. Kish is nearly 100% graphite and results from the rejection of carbon as the iron cools. Kish is generally larger than 75 μm in diameter. The remaining 58% of the emissions from hot metal transfer are iron oxide with a particle size less than 3 μm.[22,46]

In this section, the options to be considered for the control of fugitive emissions from hot metal transfer operations are: (a) close fitting ladle hoods, both movable and stationary; (b) canopy hoods, also movable or stationary; and (c) partial building evacuation.

5.3.1 Option A: Close Fitting Ladle Hoods

There are several variations of close fitting ladle hoods. Some are stationary; others are movable. Some have hot metal inlets in the top while others are open on one side. Aside from minor design differences, however, the close fitting hoods are similar in that they all require lower flow rates for the same degree of control than do the canopy hood options; they all can be designed to draw enough of a vacuum to keep fumes from leaking from the

inlet hole or around the bottom of the hood and they all require careful operating procedures.

Extent of Application--

A movable ladle hood with one side open as a hot metal inlet has been reported recently.[22] The hood is said to be movable since one hood serves a two-ladle hot metal transfer station. Four stationary ladle hoods with hot metal inlets in the top are known to be in operation at four different plants. The ladles are carried under the close fitting hoods on railcars.

Problems Associated with Application--

As with all local hoods, the problems of operation interference and the possibility of damage due to thoughtless operation do exist. Retrofitting a stationary, close fitting ladle hood may be incompatible with the moving of the ladle away from the station by the charging crane. This can be solved by installing a movable ladle hood or a system such as a railcar for moving the ladle from beneath the stationary hood.

Control Device Performance--

The volume flow rate required to control hot metal transfer emissions is directly proportional to the volume of hot metal transferred.[22] At two transfer stations, the evacuation rate was 40,000 to 50,000 acfm to handle approximately 100 tons of hot metal in one case and 200 tons in another. The construction time for the hood and its ductwork required approximately 10 working days. At a third station, the flow rate was 125,000 scfm to handle approximately 150 tons of hot metal. The movable, close fitting ladle hood utilizes 125,000 acfm to handle approximately 270 tons of hot metal. These values show that actual, normalized evacuation flow rates range from 200 to 500 acfm/ton of hot metal handled for close fitting ladle hoods. The figure 200 acfm/ton of hot metal is probably too low since this particular plant is lacking air pollution equipment of adequate capacity.

Control Device Cost--

The hood utilized to evacuate a 100-ton hot metal transfer process was estimated by the purchaser to cost $50,000 to fabricate and install. This price was estimated for the hood alone and did not include the ductwork and its support or building modifications. No other costs were available.

5.3.2 Option B: Canopy Hoods

With canopy hoods as with close fitting hoods, there are several variations available, such as local or roof mounted canopies and stationary or movable canopies. Canopies can be used above any of the three hot metal transfer possibilities; that is, torpedo car to charging ladle, torpedo car to mixer, or mixer to charging ladle.

Extent of Application--

There is one known application of a movable canopy hood utilized to capture fugitive emission generated during the transfer of hot metal from a torpedo car to one of two mixers. The hood can be moved over whichever mixer is accepting the hot metal. Whether the hood is local or roof mounted is not known.

Problems Associated with Application--

No unusual problems are associated with the application of canopy hoods. There are the typical considerations of retrofitting such as availability of space for the capture device, strength of building supports, routing of ductwork and availability of space for the removal device. Also, the action of crosscurrents in minimizing capture efficiency must be reduced. In some new designs, secondary emission control systems such as hot metal transfer station hoods, furnace charging, tapping and slagging are vented to a single removal device. This concept of a centralized removal device to handle several sources is becoming common in new plant design.

Control Device Performance--

Little information is available about the one known canopy hood. One can conclude, however, that if close fitting ladle hoods require 200 to 500 scfm/ton of hot metal transferred, local canopy hoods will require more ventilation and roof canopy hoods the most ventilation. Values can be calculated using the Hemeon equations which show that the ventilation volume is dependent on the size of the source, the temperature difference between the plume and the ambient atmosphere and the distance the face of the hood is from the source.[47]

Control Device Cost--

Little information is available about the one known canopy hood.

5.3.3 Option C: Partial Building Evacuation

While total building evacuation solely to capture hot metal transfer emissions is extreme, building configuration could sometimes lend itself to partial evacuation. There are cases where the roof itself may be used as a holding chamber for hot metal transfer emissions, with only the installation of a few additional baffles required. The principle of this option is to let the hot emissions rise to the roof and collect there until the operator desires to evacuate them through a scavenger duct.

Extent of Application--

There is only one known application of this option. The hot metal transfer station serves three 120-ton BOFs. The roof plenum chamber is vented to a baghouse.

Problems Associated with Application--

There is one forseeable problem associated with this option. The carbonaceous, flakelike particles called kish are large and are not likely to transport with the upward convective flow, but rather to settle out in the shop. Particles that did make it to the roof would not remain there long before settling out. From the perspective of in-shop health, the mass mean diameter of the kish particles is larger than 10 μm; consequently, kish would have little impact on human respiration. It is, however, a nuisance problem.

Control Device Performance--

The flow rate used to evacuate the plenum roof chamber during hot metal transfer was 300,000 acfm for the transfer of approximately 80 tons of hot metal or approximately 3,600 acfm/ton of hot metal transferred. Of course if the roof plenum chamber is large enough to hold all the emissions, they can be collected and evacuated at any desired flow rate able to capture larger particles before they settled back to the shop floor.

Control Device Cost--

The incremental cost for the hot metal transfer station control is based on some unknown portion of the total installed cost for secondary emission control of three 120-ton BOF's which was $5,000,000 in 1976. This value includes, but is not limited to, enclosure of the roof above the hot metal transfer stations and above the BOF charging position, the purchase and installation of a 400,000 acfm fabric filter pressurized baghouse and the purchase and installation of ductwork, fans and motors.

5.4 TEEMING

After the steel is tapped from the furnace, whether EAF, BOF or OHF, there exists two possible methods to produce a semifinished product. The steel can be teemed into ingots and eventually rolled into semifinished stock after various cooling and reheating processes, or the molten steel can be transported to a nearby continuous caster and cooled and rolled with no intermediate steps or time delay. Teeming the molten steel into the ingots or pouring it into the tundish that feeds the caster is a source of fugitive emissions. Many observers have reported ingot teeming to be a minor source of emissions.[30] Unfortunately, quantification of emissions from teeming has not yet been accomplished because other sources have been given priority.

Controls have been applied in selective teeming situations where potentially toxic additions are made to the ingots. These additions include lead and tellurium, to name a couple.[48] The only option considered in this report is the local hood. Since the main reason for installing controls is to protect the personnel on the teeming platform, the hood must have a high capture efficiency, a requisite which local hoods are more likely to fulfill. Other

options such as roof canopies or partial building evacuation, while possible, have not been applied because many questions concerning cost versus benefit exist.

5.4.1 Option A: Local Hoods

Several possible configurations of local hoods exist. The hoods can be side draft or overhead, mobile or stationary. If the hoods are stationary, they usually extend over only a few of the ingots, since hoods over the entire teeming line would be of questionable cost-effectiveness.

Extent of Application--

There are three known teeming facilities which have fugitive emission controls. All of these facilities add either lead or tellurium to their ingots. The teeming emission control system at Inland Steel's new No. 2 BOF shop is documented in the literature although details of the system are few.[48] Knowledge of the remaining two systems was acquired either through personal meetings or via telephone.

Problems Associated with Application--

There are no known problems with the application of local hoods to control ingot addition emissions. As with any control close to the operation, the design must ensure ease of operation.

Control Device Performance--

The Inland Steel lead and fume collection system has a capacity of 60,000 scfm. A second plant vents its hood at 50,000 acfm to its own baghouse. This second plant has a movable side draft hood attached to a railcar. The railcar is hooked to the teeming crane and is towed along with it.

Control Device Cost--

The total installed cost for the side draft, railcar-mounted hooding system was $150,000. This amount represents total cost, with a few of the individual cost items being the car, the hood, the baghouse, the fan, the motor and the ductwork.

No costs were available for the other two known systems.

5.5 OTHER SOURCES

The sources to be considered in this section are gas cutting operations, sinter plants and desulfurization stations. The sources in this section are not necessarily of less importance or of smaller magnitude than those previously mentioned. The reason for the placing of these particular sources in a miscellaneous section is that there was little or no information with which to identify and evaluate operating fugitive emission control systems.

5.5.1 Gas Cutting Operations

There are several gas cutting operations at a steel plant. Among these are (a) cutting buttons, (b) cutting skull, (c) cutting scrap and (d) scarfing. Buttons or buttes are the hardened remnants of molten steel left at the bottom of a ladle. These are probably an accidental occurrence and consequently are not the result of typical practice. Skull is hardened steel on the side or mouth of a ladle, tundish, or a steelmaking furnace. The skull forms where steel at a reduced temperature comes in contact with the ladle, tundish or furnace lining and cools there. A third source of fugitive emissions, scrap cutting, occurs in the scrap yards. Since purchased scrap is categorized by size (among other variables), it would not be typical to cut purchased scrap. One might expect home scrap to be subject to more gas cutting than purchased scrap. Finally, scarfing, both by hand and by machine, is a source of fugitive emissions. Scarfing is done only when necessary since each fraction of steel scarfed from the surface represents a loss in dollars.

Control of only one gas cutting source has been observed and that was the hand scarfing of semifinished products. A roofed shed with open sides was constructed. The shed contained a crane above which was installed a large canopy hood. The total flow rate of the hood was 200,000 acfm. This flow was spread over several exit ducts installed along the hood.

While other controls have been observed, it is possible that local or canopy hoods could be utilized to capture fugitive emissions from the deskulling of ladles and cutting buttes. For the shops that have their own deskulling stands, it would be feasible to install a hood over such a stand.

While operations such as deskulling and the cutting of buttes and scarfing may be performed in a single small area capable of being hooded, scrap cutting is not so amenable to conventional hooding. If a significant amount of scrap cutting was performed, it might be possible to justify a shed such as the one described above to control hand scarfing. Another possibility would be a mobile hood mounted on a wheeled or tracked vehicle. The removal device could be centrally located in the scrap yard. Were this latter option to be selected, the respirable mass of dust generated by the vehicle itself would necessarily have to be less than that generated by the scrap cutting operation.

5.5.2 Sintering

There are several potential sources of fugitive emissions within sinter plants: raw material handling; windbox leakage; strand discharge; hot screening; cooler discharge and cold screening. The two most widely mentioned sources are strand and cooler discharge.

An interview with one steel industry representative revealed at least in a qualitative sense, the severity of each of the aforementioned sources. Raw material input, that is, iron ore fines, flux fines and coke breeze, are for the most part moist and not a major source of emissions during transport. This, of course, does not preclude isolated problem cases where the fine input materials are relatively dry and consequently are probable dust sources.

Fugitive windbox emissions were felt by the interviewee to be nonexistent since the windbox is under negative pressure. MRI feels that as long as negative pressure is maintained, this is true. However, process upsets may exist where the draft is reduced for one reason or another. The frequency of such upsets is unknown.

Strand discharge into the sinter breaker is a large source of emissions, although few of these emissions are fugitive since a tight fitting hood is a typical capture device. Hot and cold screens can also be easily enclosed and vented to a control device although two plant visits have shown no enclosure on the cold screens.

Almost all coolers now in operation are annular; most are the induced draft type. It is common to have a stack on an induced draft cooler so that the emission is, by definition, not fugitive but an uncontrolled stack emission. Coolers without stacks, many of which are of the forced draft type, produce fugitive emissions. With all cooler emissions, it is important to remember that only an estimated 5% of the particles by weight are smaller than 5 μm.

One observed sinter plant control system for fugitive emissions contains 43 different pickup points on the sinter operation, which are all vented to a baghouse. The fact that there are 43 points of emissions is indicative of the number of fugitive emission sources within this particular sinter plant.

5.5.3 Hot Metal Desulfurization

Iron desulfurization is the process of removing sulfur from molten iron for varied purposes such as: (a) to increase steel cleanliness; (b) to reduce surface defects; (c) to increase hot workability; (d) to increase impact and ductility values; and (e) decrease porosity in welds.[49] Iron desulfurization normally takes place between the tap at the blast furnace and the charge to the steel furnace.

The only known fugitive emission control systems for iron desulfurization are applied in foreign plants. Krupp-Rheinhausen has two swivel-type hoods over two adjacent desulfurization stations.[50] Nippon Steel's Oita Works has a stationary overhead hood on their desulfurization station with

a flow rate of 50,000 acfm.[51] Kawasaki's Mizushima Works utilizes an overhead stationary hood to control fugitive emissions from both desulfurization and deslagging of the iron with a hood flow rate of 150,000 acfm. Nippon Steel's Yawata Works utilizes a closed type, stationary hood to control desulfurization emissions with 100,000 acfm. It is not known whether this enclosed hood is of the total enclosure or close fitting ladle hood type. Finally, Sumitomo's Kashima Works collects emissions from both hot metal transfer and desulfurization with closed-type stationary hoods utilizing 250,000 acfm.

SECTION 6.0

CONTROL TECHNOLOGY FOR OPEN DUST SOURCES

This section presents an assessment of best available control technology for open dust sources associated with integrated iron and steel plants. Information from this assessment was obtained from (a) published and unpublished literature and (b) surveys of representative iron and steel plants.

In the sections below, control system options are presented for the following open dust sources:

Materials handling (unloading and conveyor transfer stations)

Storage pile activities

* Load-in,
* Vehicular traffic,
* Wind erosion, and
* Load-out.

Vehicular traffic

* Unpaved roads, and
* Paved roads.

Wind erosion of exposed areas

Expected performance and cost data are given for each option along with the current extent of application.

The effectiveness and cost of various control options for the reduction of fugitive dusts generated from open dust sources within an integrated iron and steel facility are discussed in the following sections. A discussion of

each control option is given concerning: (a) extent of application; (b) problems associated with control; (c) control performance; and (d) control costs.

6.1 MATERIALS HANDLING

Materials handling refers to railcar unloading, conveyors and conveyor transfer stations.

6.1.1 Option A: Enclosures

The total or partial enclosure of railcar unloading stations, conveyors, and conveyor transfer stations is an effective means to minimize fugitive dust emissions. Control systems of this type include (a) total enclosure of railcar unloading stations with the removal of captured particulate by high efficiency bag filters; (b) the total or partial enclosure of open conveyors; and (c) the total or partial enclosure of conveyor transfer stations with the removal of dusts by bag filters.

Extent of Application--

The integrated iron and steel plants surveyed by MRI utilized these methods of control at various points.

Problems Associated with Application--

Problems which may occur with the enclosure of railcar unloading stations, conveyors and conveyor transfer stations are maintenance related. Leaks in total enclosure systems equipped with bag filters will reduce the effectiveness of the dust collection systems. Maintenance of enclosed conveyors and conveyor transfer stations requires the removal and replacement of sizable sections of sheet metal.

Control Performance--

Estimated control efficiencies for the enclosure of railcar unloading stations, conveyors and conveyor transfer stations, as determined by MRI, are presented in Table 6-1. The total enclosure of railcar unloading stations and dust collection with bag filters has an estimated control efficiency of 99% in relation to open (uncontrolled) unloading stations. The control efficiency estimated for top-covered conveyors is 70%. An airtight conveyor enclosure exhausted to a bag filter has an estimated control efficiency of 99%. The enclosing of conveyor transfer points gives estimated control efficiencies of 70 to 99%. The lower value relates to a simple enclosure, and the higher value related to a full enclosure exhausted to a bag filter.

Control Cost--

The initial and annual operating costs associated with these three enclosure control systems are presented in Table 6-1. The initial cost of a total enclosure and bag filter system for a railcar unloading station has

TABLE 6-1. MATERIALS HANDLING DUST CONTROLS

Control method	Estimated control efficiency (%)	Initial cost (1977 $)	Annual operating cost (1977 $)
Option A: Enclosures			
Railcar unloading station	99[a/]	100,000	NA
Covering conveyor	70 to 99[b/]	35 to 70/ft of conveyor[b/]	NA
Enclosing conveyor transfer station	70 to 99[c/]	3,000 to 18,000[c/]	NA
Option B: Spray systems			
Railcar unloading station	80	30,000	NA
Conveyor transfer station	70 to 95	15,000 to 200,000[d/]	0.02 to 0.04/ton material treated[e/]

NA = Not available.

a/ Utilizes high efficiency bag filter.

b/ Low value utilizes "weather tight" system; high value utilizes dust collection system.

c/ Low value simple enclosure; high value enclosure plus bag filter.

d/ Low value reflects control at one transfer station; high value reflects total cost for a multiple system handling 2.2×10^6 tons of material per year.

e/ Wetting agent cost applies only to the $15,000 single transfer station control system.

been estimated by the Dravo Corporation to be $100,000,[52] but no annual operating costs were obtained for this system. The initial costs of installing topcovers and airtight conveyor enclosures were estimated by a materials handling contractor to be $35 to $70/ft, respectively, but the airtight conveyor cost does not include the cost of a dust collection system. No annual operating costs were obtained. The initial cost of enclosing conveyor transfer stations is $3,000 for simple enclosure to $18,000 for enclosure with bag filtration,[53] but no annual operating costs were obtained for this control measure.

6.1.2 Option B: Spray Systems

Spray systems which utilize water and/or chemical wetting agents are effective methods of dust control for railcar unloading stations and conveyor transfer stations. The water spray systems create mists which capture dust emissions. Wetting agents agglomerate fine particles which would otherwise escape the control of water sprays.

Extent of Application--

The integrated iron and steel plants surveyed by MRI utilized these methods of control at various points.

Problems Associated with Application--

Problems associated with spray systems include the inability of the systems to work below freezing temperatures and the possible buildup of impacted material at the materials handling station.

Control Performance--

Estimated control efficiencies, as determined by MRI, for materials handling spray systems are presented in Table 6-1. For railcar unloading stations utilizing spray systems, a control efficiency of 80% is estimated. The use of spray systems at a conveyor transfer station has an estimated control efficiency of 70 to 95%.

Control Cost--

Table 6-1 presents cost data for spray systems. The initial costs of implementing spray systems on quick bottom-dump and rotary-dump railcar unloading stations have been estimated by the Dravo Corporation[52] to be $30,000 and $40,000, respectively; but no annual operating cost data were obtained for this system.

The initial cost for a foam-type spray system is $10,000 to $15,000 per conveyor transfer point. For this system, it is stated that by injecting the foam into the free falling aggregate at the first transfer point, adequate dust control will be realized through subsequent conveyor and transfer operations. The annual operating cost of this system is 2 to 4¢/ton of treated material throughput.[54]

The initial cost of implementing multiple conveyor sprays for a plant handling 2.2 x 10^6 tons of material per year was estimated by a materials handling contractor to be $200,000. No annual operating costs for this system were obtained.

6.2 STORAGE PILE LOAD-IN

6.2.1 Option A: Reduce Drop Distance

Reducing the distance that a material falls during the load-in process minimizes the potential for fugitive dust emissions. Control may be brought about (a) by increased operator awareness in the use of conventional front-end loaders, overhead conveyors, or clamshell buckets or (b) through the use of specialized equipment, including height-adjustable stackers (both stationary and mobile) and telescopic chutes.

A telescopic chute is placed at the discharge end of either a mobile or stationary stacker. The telescopic chute consists of a series of thin-walled cylinders which guide the material being dropped by the stacker. As the pile grows in height, a sensor retracts the cylinders so they do not become embedded in the pile. The telescopic chute can reduce the effective material drop distance to a few feet.

Extent of Application--

Of the four plants surveyed by MRI for open dust sources, three utilized stackers to some extent in the load-in process. However, telescopic chutes were not in use at these plants.

Problems Associated with Application--

Because stationary or mobile stackers require tie-in with (existing or new) conveyor systems, whenever the conveyor system breaks down, the stacker becomes inoperable. Telescopic chutes could become embedded in the pile with the result that stacking systems would overload. No information was received on the frequency of this occurrence.

Control Method Performance--

Estimated control efficiencies associated with reduction of drop distance, as determined by MRI, are presented in Table 6-2. The visible dust generated from the use of stackers and telescopic chutes was compared to the dust generated utilizing front-end loaders or clamshell buckets, in deriving the control efficiencies. An estimated control efficiency of 25% is assigned to stackers, which have the capability of limiting the drop height; and telescopic chutes are assigned an estimated control efficiency of 75%.

TABLE 6-2. STORAGE PILE ACTIVITY DUST CONTROLS

Control method	Estimated control efficiency (%)	Initial cost (1977 $)	Annual operating cost (1977 $)
Load-in			
Option A: Reduce drop distance			
Stacker - height adjustable	25	100,000 to 5,300,000	NA
Telescopic chutes	75	7,000	NA
Option B: Enclosures			
Stone ladders	80	20,000	NA
Wind guards	50	10,000 to 50,000	NA
Option C: Spray systems			
Stacker - sprays	75	60,000+	NA
Vehicular traffic around storage piles (see Table 6-4)			
Wind erosion from storage piles			
Option A. Surface stabilization			
Regular watering	80[a]	11,000	NA
Surface crusting agents	up to 99[b]	11,000+	0.004 to 0.1/sq ft
Option B: Enclosures			
Storage silos	100	60/ton material stored	NA
Vegetative wind breaks	30	35 to 350/tree[c]	NA
Low pile height	30	NA	NA
Load-out			
Option A: Reduce material disturbance			
Gravity-feed-plow reclaimer	85	35 to 60/ton material stored	NA
Rake reclaimer	85	NA	NA
Bucket wheel reclaimer	80	2.2 to 5.3×10^6 [d]	NA
Option B: Spray systems			
Bucket wheel reclaimer sprays	95	60,000+	NA

a/ Based on a wind-activated sprinkler system.

b/ Based on measured data, see Appendix C.

c/ Low value 8-ft trees, high value 25-ft trees.

d/ Based on a mobile stacker/reclaimer system.

Control Cost--

Cost data for stackers and telescopic chutes are presented in Table 6-2. The initial cost for a stacker is dependent on (a) whether it is stationary or mobile, (b) the rated capability of the equipment, and (c) whether the stacker is combined with a reclaiming operation. Depending on rated capacities, stationary stackers have an initial cost of $100,000+. Mobile stackers vary greatly in cost as shown by these examples:

1. Ore yard stacker, capacity 2,000 t/hr· $600,000.

2. Iron ore stacker, capacity data not available: $1,800,000.

3. Coal and coke yard stacker/reclaimer combination, stacker capacity 2,000 t/hr· $2,250,000.

4. Coal yard stacker/reclaimer combination, stacker capacity 3,000 t/hr: $4,000,000.

5. Ore yard stacker/reclaimer combination, stacker capacity 5,000 t/hr· $5,300,000.

These approximate costs of equipment purchase and erection were obtained from the Dravo Corporation.[52/] No annual operating cost data were obtained.

The initial cost of a telescopic chute, as quoted for a 30-ft maximum pile height is $7,000. This cost was obtained from a materials handling contractor. No annual operating cost data were obtained.

6.2.2 Option B: Enclosures

The total or partial enclosure of free falling aggregate as it leaves the discharge end of a stacker reduces fugitive dust emissions. Enclosure methods applicable to stacker load-in include stone ladders and wind guards.

Stone ladders are permanent devices which guide the material from a stacker to the pile. The ladder consists of a vertical tube (connected to a stationary stacker) located in the center of the pile with openings in that tube at various heights. Material fills up the tube until it reaches an opening not covered by the pile at which point it flows out onto the pile.

Wind guards are fixed in length and are placed at the discharge end of the stacker arm. They operate somewhat like the telescopic chute in reducing the eroding action of the wind.

Extent of Application--

None of the steel plants surveyed utilized stone ladders or wind guards. These devices are used to a greater extent in the crushed stone industry.

Problems Associated with Application--

Stone ladders are stationary and must be attached to a stationary stacker. This places restrictions on the type of pile formation possible. No major problems are associated with wind guards.

Control Performance--

Estimated control efficiencies associated with enclosures, as determined by MRI, are presented in Table 6-2. Stone ladders and wind guards have estimated control efficiencies of 80 and 50%, respectively, relative to use of front-end loader for storage pile load-in.

Control Cost--

The initial and annual operating costs for enclosures are presented in Table 6-2. The initial cost of a stone ladder, for a 30-ft maximum pile height, as quoted by a materials handling contractor, is $20,000. Wind guards have an initial cost, as quoted by the Dravo Corporation, of $10,000 to $50,000.[52] Annual operating cost data were not obtained for these control methods.

6.2.3 Option C: Spray Systems

Utilizing a water or wetting agent spray system at the discharge end of a stationary or mobile stacker effectively minimizes fugitive dust emissions.

Extent of Application--

None of the plants surveyed by MRI utilized this control method.

Problems Associated with Application--

Because the spray system requires water as the main control agent or as a carrier medium for chemical wetting agents, special care is required when working under subfreezing conditions. Also, with mobile stackers, care must be taken in maintaining the traveling tubing and piping.

Control Performance--

Estimated control efficiencies associated with stacker spray systems, as determined by MRI, are presented in Table 6-2. Relative to use of uncontrolled front-end loaders, a stacker spray system has an estimated control efficiency of 75%.

Control Cost--

Cost data for stacker spray systems are presented in Table 6-2. A spray system which wets the material as it falls from the stacker arm has an initial

cost of $60,000+. This includes piping, sprays, reels for mid-travel pickup, and wetting agent proportioners. The above cost information was obtained from the Dravo Corporation.[52] No annual operating cost data were obtained.

6.3 VEHICULAR TRAFFIC AROUND STORAGE PILES

Fugitive dust is generated by the various types of vehicles which transport materials to and from storage and which maintain the storage pile configurations. These vehicles consist mainly of front-end loaders; however, large dump trucks may also be used, especially in the slag plant areas. Watering and chemical dust suppressants may be used to control emissions from vehicular traffic. Information on these control options are presented in Section 6.6, Vehicular Traffic on Unpaved Roads.

6.4 WIND EROSION FROM STORAGE PILES

6.4.1 Option A: Surface Stabilization

The process of stabilizing the surface layer of a pile consists of binding the surface particulates into a nonerodible crust. Occasional watering of the pile surface or the addition of chemical crusting agents will accomplish this task.

Extent of Application--

At one plant surveyed by MRI, a daily watering program for the coal storage piles was implemented to reduce wind erosion.

Problems Associated with Application--

Typically, storage piles are subject to the addition or removal of material many times during the course of a week. Every time this occurs, the surface crust is disturbed. Thus, surface watering or the application of crusting agents must be done on a frequent basis.

In order to wet the surface layer, a network of sprinklers, towers, waterlines, pumps or tank truck sprayers are required. The positioning of this equipment may interfere with the normal pile load-in/load-out procedures. Also, control systems which use water can become inoperable during freezing weather conditions. In addition, some materials such as processed slag are normally marketed in the dry state, making the addition of water undesirable.

Control Performance--

Estimated control efficiencies associated with surface stabilization, as determined by MRI, are presented in Table 6-2. The control efficiency associated with periodic watering of the pile surface is estimated to be 80%, assuming that wetting of storage piles occurs on a regular basis. Water spray systems may conssit of stationary ground level sprinkler systems, tower-mounted

sprinklers, or mobile tank-truck sprayer systems. An operating example is a stationary ground level system wetting two 900-ft long coal piles utilizing sprinkler heads spaced every 180 ft. Under dust producing meteorological conditions, the system of 32 sprinklers surrounding the piles sprays about 13,000 gal. of water per day. This system adequately controls wind erosion generation of fugitive dust.[55]

A sprinkler system mounted on a 30-ft tower producing a dense, 40-ft wide cloud of water mist has been used to minimize storage pile wind erosion at a quarry site. This system, which is both wind speed and direction activated, has produced favorable results.[56]

The control efficiencies associated with the spraying of surface crusting agents upon storage piles can extend to 99%, as derived from wind tunnel tests (Appendix C). Surface crusting agents can be applied by either stationary or mobile sprinkler systems. Example chemicals and application rates for different types of these crusting agents are presented in Table 6-3.

Control Cost--

The initial and annual operating costs for surface stabilization are presented in Table 6-2. The initial cost of erecting a stationary elevated water spray system, which controlled one relatively large stockpile, was estimated to be about $11,000, including sprays, piping, pumping, wind instruments and installation costs.[56] No annual operating costs were obtained for this system.

The cost of applying surface crusting agents to storage piles from stationary equipment is assumed to be slightly more costly. This assumption is based on the need for additional mixing chambers and proportioners to dilute the crusting agents with water. The cost of applying these various surface crusting agents is presented in Table 6-3.

6.4.2 Option B: Enclosures

Shielding of storage piles from the direct action of the wind, through the use of total or partial enclosures, reduces the potential for fugitive dust. Methods which accomplish this include (a) storage silos, (b) windbreaks, and (c) low pile heights. Windbreaks are either natural (trees, locating piles in low lying areas) or man-made (buildings, fences).

Extent of Application--

Storage silos are used more for the storage of special materials than as measures against wind erosion. At one plant surveyed by MRI, however, the majority of coal was stored in one large silo, partially as a measure against wind erosion. Although the surveyed plants did not utilize natural windbreaks,

TABLE 6-3. EXAMPLE SURFACE CRUSTING AGENTS FOR STORAGE PILES AND EXPOSED AREAS[a]

Surface crusting agent (concentrate)	Dilution	Application rate	Application cost[b]
A. Organic polymers			
· Johnson-March, SP-301	Full strength	1 gal. concentrate per 100 ft^2	1.2¢
· Houghton, Rexosol 5411-B	2% solution	1 gal. concentrate per 300 ft^2	0.7¢
B. Petroleum resin water emulsion			
· Witco Chemical, Coherex	20% solution	1 gal. concentrate per 50 ft^2	0.4¢
C. Latex type-synthetic liquid adhesive			
· Dowell M145 chemical binder	4% water solution	4 gal. of 4% solution per 100 ft^2	0.4¢

a/ Reference 55.

b/ Cost per square foot of surface area.

the piles were usually located near buildings (sinter plant, coke ovens or blast furnaces), and these structures probably reduced the eroding force of the wind. Many piles were observed to have low heights, which was mainly attributed to the associated pile load-in methods. Because surface wind speed increases with height, lower pile heights result in lower surface wind speeds and less wind erosion.

Problems Associated with Application--

Problems associated with storage silos include (a) maintenance of conveyors used for the loading and reclaiming of the stored materials and (b) possible explosion hazards caused by the high dust concentrations inside the silos. No major problems are associated with natural windbreaks other than the time required for trees to reach their mature height. The problem with maintaining low storage pile height is the requirement for land area, and the possible offsetting effect of increased pile surface area exposed to the eroding action of the wind.

Control Performance--

Estimated control efficiencies for enclosures, as determined by MRI, are presented in Table 6-2. Silos, which totally enclose the storage pile materials, have an estimated control efficiency of 100%. Windbreaks placed upwind of the storage pile area based on prevailing wind direction are assigned an estimated control efficiency of 30%. Maintaining low pile height (not greater than 15 ft) has an estimated control efficiency of 30%.

Control Cost--

The initial and annual operating costs for enclosures are presented in Table 6-2. The initial cost of a concrete silo system is approximately $60 per ton of material stored.[55/] The cost of planting trees for use as windbreaks ranges from $35 for 8-ft trees (30-ft height in 15 years) to $350 for 25-ft trees. Maintaining low pile heights has no directly associated costs. No annual operating costs for these measures were obtained.

6.5 STORAGE PILE LOAD-OUT

6.5.1 Option A: Reduce Material Disturbance

Load-out of material from storage piles, accomplished with reclaiming methods such as gravity feed onto underground conveyors and raking or bucket reclaiming of material onto conveyors, produces minimal material disturbance, resulting in less fugitive dust emissions than generated by the use of a front-end loader to pick up, carry, and dump material onto a conveyor. Rake reclaimers vibrate along the face of a pile and move material onto an underground conveyor. The bucket wheel reclaiming method moves along the pile rotating the bucket wheel perpendicular to the pile face, depositing material onto a conveyor.

Extent of Application--

At the four steel plants MRI surveyed, the main method of reclaiming materials from storage piles was via front-end loader. Three of the plants used stacker/reclaimer equipment for a few of their major piles.

Problems Associated with Application--

Problems associated with the gravity feed of pile materials onto underground conveyors include potential mechanical problems with the conveyors and the possible clogging of the underground transporting rails and plow, which moves material onto the conveyors. Mobile rake and bucket wheel reclaimers which are mounted on surface rails and can reclaim at various pile locations, require special pile orientations and need to be connected to conveyor systems, requiring periodic maintenance.

Control Performance--

Estimated control efficiencies for reduction of material disturbance, as determined by MRI, are presented in Table 6-2. Control efficiencies are estimated relative to use of uncontrolled front-end loaders. Gravity feed plow-type reclaiming is estimated to have a control efficiency of 85%, based on the fact that the material is being reclaimed from under the pile for the greater portion of the reclaiming process. Toward the end of the reclaiming process, front-end loaders may have to push the remaining pile material onto the conveyor feed mechanism.

Rake reclaimers are assigned an estimated control efficiency of 85%. One surveyed steel plant reclaimed iron ore and pellet piles with this method at material rates of 800 and 900 tons/hr, respectively. The control efficiency of the bucket wheel reclaiming method is estimated to be 80%.

Control Cost--

The initial and annual operating costs associated with reclaiming methods which reduce material disturbance are presented in Table 6-2. The initial cost of a gravity feed plow reclaiming system is estimated to be from $35 to $60 per ton of material stored,[55] but no annual operating costs were obtained for this system. Cost data were not obtained for the rake reclaiming method.

The bucket wheel reclaimer is often found as part of a stacker/reclaimer combination. Examples of initial costs associated with this combination are as follows:[52]

1. Coal and coke stacker/reclaimer, reclaiming capacity: 875 tonnes/hr coal, approximate cost erected: $2,250,000.

2. Stacker/reclaimer, rated reclaiming capacity: 1,500 tonnes/hr ore, approximate cost erected: $4,000,000.

3. Stacker/reclaimer, rated reclaiming capacity: 4,000 tons/hr pellets, approximate cost erected: $5,300,000.

No annual operating costs were obtained for this equipment.

6.5.2 Option B: Spray Systems

The application of water or chemical wetting agents prior to pile load-out reduces fugitive dust emissions. Methods include simple surface wetting of pile material to the use of specialized spray systems attached to bucket wheel reclaimers.

Extent of Application--

None of the steel plants surveyed by MRI utilized these control methods.

Problems Associated with Application--

Since the spray systems utilize water as a control medium, special care is required when working under freezing conditions. Care must also be taken in maintaining piping and tubing equipment which are attached to mobile wheel reclaimers.

Control Performance--

Estimated control efficiencies associated with spray systems are presented in Table 6-2. The control efficiency for the surface wetting of piles prior to front-end loader or mechanical reclaimer load-out was not obtained. It is believed this method has a low control efficiency because only the dust from the pile surface material is controlled. The control efficiency for a bucket wheel reclaimer spray system, relative to load-out with a front-end loader, was estimated by MRI to be 95%.

Control Costs--

The control costs associated with spray systems are presented in Table 6-2. The initial cost for a spray system which wets material as it is being reclaimed by a mobile bucket wheel reclaimer is $60,000+. This is estimated by MRI from data obtained for a stacker (load-in) spray system.[52/] This includes piping, sprays, reels for mid-travel pickup and wetting agent proportioners. No annual operating cost data were obtained.

6.6 VEHICULAR TRAFFIC ON UNPAVED ROADS

6.6.1 Option A: Dust Suppressants

The means of fugitive dust control included under this option are unpaved roadway watering, oiling, and the use of chemical dust suppressants.

Extent of Application--

Roadway watering and oiling programs were implemented at three of the plants surveyed by MRI.

Problems Associated with Application--

Problems encountered with the watering of plant unpaved roads include (a) need for a continuous program, (b) rapid drying of road surfaces during hot and dry weather, and (c) the pickup of wet road surface material onto vehicles and the subsequent tracking of this material onto paved roads.

To be effective, an unpaved road watering program should be based on regular and frequent watering. This requires a commitment with regard to manpower and equipment. Usually two or more waterings per day are applied to reduce dust emissions depending on the climate of the plant area. Plants located in regions experiencing hot, dry, windy periods will need to increase the intensity and frequency of road watering.

The watering of unpaved roads increases the tracking of surface material onto paved road surfaces. This additional particulate surface loading may be reentrained by paved road traffic. A paved road sweeping program would reduce the potential for dust reentrainment at the junction of paved and unpave roads.

The oiling of unpaved roads may lead to a surface runoff water pollution problem. Proper equipment must be allocated and the roadway may need to be re-oiled once a month or more frequently, depending on road travel. The addition of dust suppressant chemicals requires specialized mixing and application equipment and requires periodic reapplication.

Control Performance--

Estimated control efficiencies associated with dust suppressant control methods, as determined by MRI, are presented in Table 6-4.

The control efficiency realized from an unpaved road watering program is based on the regularity of the program and the type of equipment used. Durin steel plant visits, MRI personnel noted the types of watering trucks and frequency of use. The equipment ranged from retrofitted home heating oil delivery trucks to specialized trucks with mounted pressurized spray bars. The wa tering programs ranged from sporadic biweekly watering to watering of problem areas on an almost continuous basis. An estimated control efficiency of 50% has been assigned unpaved road watering. This value is dependent on the frequency of watering, type of road surface material, characteristics of traffic on the road, and meteorological conditions.

Monthly oiling of an unpaved road has an estimated control efficiency of 75%. This value is based on observation of heavy truck traffic on oiled and

TABLE 6-4. ROAD DUST CONTROLS

Control method	Estimated control efficiency (%)	Initial cost (1977 $)	Annual operating cost (1977 $)[a]
Unpaved roads			
Option A. Dust suppressants			
Watering - regular schedule	50[b]	10,000/truck[c]	20,000[c]
Road oil	75[d]	2,500/mile[e]	(Re-oil once a month)[c]
Chemicals (e.g., Coherex or Lignin)	90 to 95[f]	5,000 to 12,000/mile[b]	31,000 to 75,000
Option B. Improvement of road surface			
Use of low silt aggregate	30[d]	NA	NA
Oil and double chip surface	80[d]	9,000/mile[e]	(Resurface every 2 to 4 yr)[e]
Paving	90[g]	28,000 to 50,000/mile[e]	(Resurface every 5 yr)[c]
Paved roads			
Option A. Sweeping			
Broom	70[d]	4,000 to 12,000/truck[h]	18,000[d]
Vacuum	75[d]	22,000/truck[c]	22,000[c]
Option B Flushing			
Water flushing	80[d]	11,000/truck[h]	18,000[d]

NA = Not available.

a/ Based on a plant having 6.3 miles of unpaved roadways, the average of open dust surveys of four plants

b/ Reference 57

c/ Obtained from steel plant personnel

d/ Assumed by MRI

e/ Obtained from a road contractor.

f/ Reference 58.

g/ Calculated reduction based on unpaved and paved roadway emission rates.

h/ Obtained from equipment manufacturer.

nonoiled unpaved road surfaces. Applications of dust suppressants such as Coherex or Lignin to the surface aggregate has an estimated control efficiency of 90 to 95%.[58]

Control Cost--

The initial and annual operating costs for application of dust suppressants to unpaved roads are presented in Table 6-4. The costs of an unpaved road watering program are based on information obtained from personnel at one of the surveyed plants. The initial cost of a nonpressurized spray water truck with a 3,000-gal. capacity is $10,000. The annual operating cost of watering roadways twice a day was estimated to be $20,000.

The initial cost of $2,500/mile for road oiling was obtained from a road contractor. The frequency rate of monthly re-oiling was determined from discussion with personnel at a surveyed plant. The initial cost of adding dust suppressants to the unpaved road surface is estimated to be $5,000 to $12,000 per mile.[57] Resurfacing is required at least once a year; thus, annual operating costs are estimated to be $31,000 to $75,000 per year for a plant having 6.3 miles of unpaved roadways.

6.6.2 Option B: Improvement of Road Surface

The methods of fugitive dust control included under this option are (a) the use of low silt aggregate for unpaved surfacing, (b) oil and double chip surfacing, and (c) the paving of unpaved surfaces.

Extent of Application--

The first and last of these control methods were implemented at two plants surveyed by MRI.

Problems Associated with Application--

The use of low silt aggregate material may require increased road maintenance to keep the surface from accumulating fractured aggregate, which will create dust. An oil and double chip surface will need to be periodically maintained and may degenerate under heavy truck traffic.

There are two problems encountered when paving unpaved roads. An adequate roadbed must be provided to handle the weight of vehicles ranging from 3 to 70 tons. Also, once the road is paved, it should be periodically cleaned to prevent excessive dust reentrainment by vehicles.

Control Performance--

Estimated control efficiencies realized from the improvement of the unpaved surface, as determined by MRI, are presented in Table 6-4. The use of low silt surface aggregate has an estimated control efficiency of 30%. Surfacing with an oil and double chip layer has an estimated control efficiency

of 80%. The control efficiency realized from a paving program is dependent on the degree to which the roads are kept free of surface loadings. Based on a weekly sweeping program, the control efficiency for paving unpaved surfaces is estimated to be 90%.

Control Cost--

The initial and annual operating costs for unpaved road surface improvement are presented in Table 6-4. The costs of using a lower silt aggregate for the unpaved road surface were not obtained. A road contractor estimated an initial cost of $9,000/mile for an oil and double chip surface, with resurfacing required every 2 to 4 years. The initial cost of paving a road surface has been estimated at $28,000 to $50,000 per mile, depending on the type of roadbed required. The cost of resurfacing a paved road, which is normally required every 5 years, was not determined.

6.7 VEHICULAR TRAFFIC ON PAVED ROADS

6.7.1 Option A: Sweeping

When excessive particulate loading builds up on paved road surfaces, the degree of vehicle reentrainment of this dust increases. To minimize these dust emissions, motorized broom sweepers and motorized vacuum sweepers are used to remove the dusts from the paved roadway.

Extent of Application--

At two plants surveyed by MRI, sporadic programs of broom sweeping were implemented. One plant had a biweekly road vacuuming program.

Problems Associated with Application--

The use of broom sweepers may produce more fines than they pick up during operation. Also, if there is no means to catch the swept dust, the broom is itself a source of fugitive dust.

Control Performance--

Estimated control efficiencies realized from these measures, as presented in Table 6-4, are dependent on the frequency of the implemented control programs. Broom sweeping is estimated to be 70% efficient when done biweekly. Biweekly street vacuuming is estimated to be 75% efficient, based on discussions with personnel at a plant where this method was implemented. These estimated control efficiencies were determined by MRI.

Control Costs--

The initial and annual operating costs for paved road sweeping programs are presented in Table 6-4. The initial cost of a broom sweeper designed for industrial roadway applications ranges from $4,000 for a trailer-type sweeper to $12,000 for a self-propelled unit with a water spray bar, as determined by

the Roscoe Manufacturing Company.[59] Annual operating costs were assumed to be $18,000. The initial cost for a vacuum street sweeper is $22,000; and the annual operating cost is also $22,000. These values were obtained from plant personnel where such a program was implemented.

6.7.2 Option B: Flushing

The flushing of paved road surfaces with water to remove roadway dusts is a viable method to reduce vehicle reentrained dusts.

Extent of Application--

This technique is used in many urban areas; however, its use was not observed at any of the steel plants surveyed by MRI.

Problems Associated with Application--

Roadway flushers may increase vehicle mud tracking from unpaved areas. Also, the flushing of roadway surface dust may create a water pollution problem, as these materials run off to low lying areas.

Control Performance--

As indicated in Table 6-4, an MRI-estimated control efficiency of 80% was assigned to weekly roadway flushing.

Control Cost--

Table 6-4 presents the initial and annual operating costs for a road flushing program. The initial cost of a 3,000-gal. capacity street flusher is $11,000 excluding the truck chassis. An annual operating cost was estimated by MRI to be $18,000, as obtained from the Roscoe Manufacturing Company.[59]

6.8 WIND EROSION FROM EXPOSED AREAS

6.8.1 Option A: Surface Stabilization

The surface layer of an exposed area may be stabilized by periodic watering or occasional application of stabilizing solutions. Oiling and paving, more permanent methods, are quite effective in reducing exposed area fugitive dusts generated by wind erosion.

Extent of Application--

Only one plant surveyed by MRI had implemented a program to reduce exposed area fugitive dust emissions. This plant had paved the vast majority of its exposed ground area.

Problems Associated with Application--

Frequently steel plant exposed areas are used for product storage, thus, preventing the use of sprinkler control systems, which would spray finished

products. The use of stabilizing chemicals may hinder the growth of vegetation which is beneficial in reducing wind erosion. The oiling of these exposed areas may create surface water runoff problems and also hinder vegetative growth. Paving the open areas would require occasional pavement cleaning to reduce resuspension of particulates.

Control Performance--

Estimated control efficiencies for stabilizing the surface soil layer against wind erosion, as determined by MRI, are presented in Table 6-5. The application of water to the surface layer not only wets the surface, but forms a hard crust upon drying, which acts to bind the erodible fine material. To be effective, however, watering must be done periodically to rebuild the surface crust as it degrades. During dry weather, watering two or three times a week may be necessary. The estimated control efficiency is 50%.

The addition of soil stabilizing chemicals will also form a hard surface crust upon drying. This surface crust, if left undisturbed, will last from 7 to 12 months, making frequent application unnecessary. The surface stabilizers as a group are assigned an estimated control efficiency of 70%.

The oiling of exposed areas is assigned an estimated control efficiency of 80%. The areas should be oiled every 2 months. Paving the open areas and occasional cleaning is estimated to have a control efficiency of 95%.

Control Cost--

The initial and annual operating costs for surface stabilization are presented in Table 6-5. The initial cost of a water sprinkler system was estimated by an irrigation contractor to be $600 per acre. This system is hand-moved and includes piping and sprinkler heads capable of applying 125 gal. of water per minute with an effective spray radius of 110 ft. The annual operating cost for a typical watering program is $4 to $10 per acre.[57]

The initial cost of oiling the exposed areas was estimated by a paving contractor to be $85 per acre per application. The annual operating cost would be dependent on the frequency of surface oiling during the year.

The initial cost of paving an acre of exposed area was estimated by a paving contractor to be $3,000 for an oil and double chip surface layer and $10,000 for paving with asphalt. No annual operating costs were obtained for these two methods.

6.8.2 Option B: Windbreaks

Methods which are applicable in reducing the eroding force of the wind include planting trees to act as windbreaks and the planting of vegetative

TABLE 6-5. EXPOSED AREA DUST CONTROLS

Control method	Estimated control efficiency (%)	Initial cost ($/acre)	Annual operating cost[a] ($/acre)
Control option A: surface stabilization			
Watering	50	600	4-10
Chemical stabilizers	70	600+	25-50
Oiling	80	85	NA
Paving with cleaning	95+	3,000-10,000[b]	NA
Control option B: windbreaks			
Windbreaks	30	35-350[c]	NA
Vegetative ground cover	70[a]	NA	NA

NA = Not available.

a/ Reference 57.

b/ Low value, oil, and double chip surface; high value, asphalt surface.

c/ Low value, 8-ft high trees; high value, 25-ft high trees.

ground cover, which impedes the wind's eroding ability and holds the surface soil layer in place.

Extent of Application--

At one plant surveyed by MRI, extensive ground cover was observed. However, no windbreaks were observed at any plant.

Problems Associated with Application--

No major problems are associated with the planting of windbreaks other than the time it requires for the trees to grow to maturity. The time lag can be alleviated by buying 25 to 30 ft trees when starting the windbreak. The planting of vegetation may be a problem where the surface layer is composed of crushed slag. Earth and soil nutrients could be required to stimulate vegetative ground cover. Ground cover could pose a fire hazard during dry seasons.

Control Performance--

Estimated control efficiencies of windbreaks, as determined by MRI, are presented in Table 6-5. Based on a tree shelter belt 40 ft in height placed upwind of the open area's prevailing wind direction, an estimated control efficiency of 30% is assigned to windbreaks. If the shelter belt surrounds the exposed area, it may also act as a trap for suspended dusts. The growth of ground cover has an associated control efficiency of 70%,[57] based on coverage during the entire year.

Control Cost--

The initial and annual operating costs for these control measures are presented in Table 6-5. The planting of 8 and 25 ft shelter belt trees cost $35 and $350 per tree, respectively. The cost of planting vegetative ground cover was not obtained, but it would be dependent on the climate and soil type of the steel plant's exposed areas. No annual operating costs for these methods were obtained.

SECTION 7.0

RESEARCH AND DEVELOPMENT RECOMMENDATIONS

This section identifies the specific research areas within the iron and steel industry which must be investigated before an adequate control program can be proposed for fugitive emission sources. Figure 7-1 is a flow diagram portraying the logic necessary to determine whether a need for research exists. Although the ultimate objectives of the research and development program would be to provide control technology for the most critical sources, preliminary research may be required to properly characterize and quantify the sources being considered.

The first step in formulating the recommended R & D program is to determine the most critical control needs. The criticality of an emissions control need is based on the preliminary ranking of sources according to nationwide air quality impact. The subsequent steps address the applicability of current control technology to each source being considered. As each apparent research need is identified, ongoing research is examined to avoid overlap in the recommended R & D program.

The following sections present information on each of the above elements used in arriving at R & D recommendations. Critical emission control needs are defined; ongoing research is examined; deficiencies in currently available control technology are identified; and cost-effectiveness analysis is performed. Finally, specific research and development programs are recommended.

7.1 DETERMINATION OF CONTROL NEEDS

7.1.1 Ranking Criteria

The environmental impact of a source on a nationwide scale is dependent on: (a) the emission factor, (b) the nationwide production rate; and (c) the percent of fine particulate (particle diameter smaller than 5 μm). Each of these factors will be discussed and quantified below.

The Emission Factor--

The emission factor is a measure of the strength of the source when active. It is important to realize that the real time source strength is dependent not

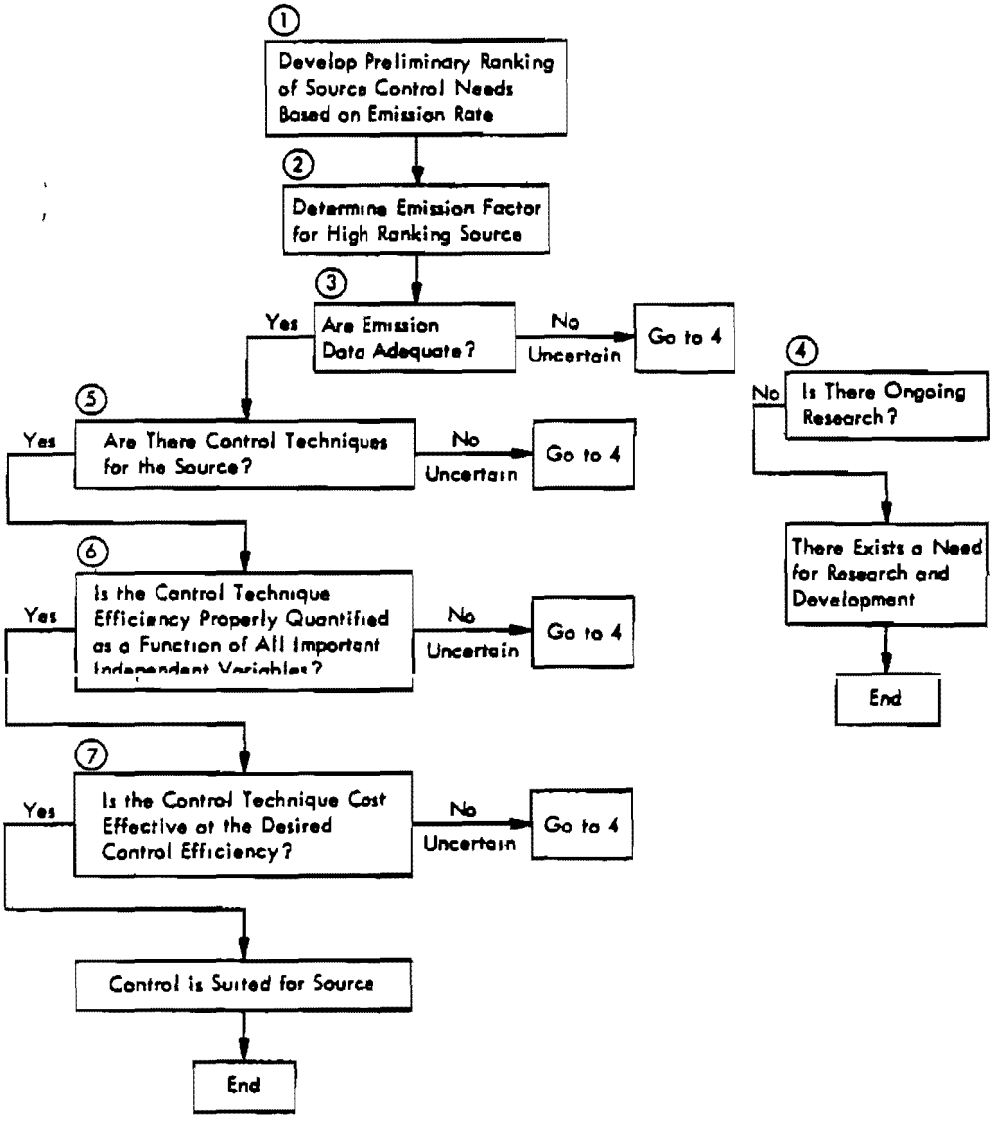

Figure 7-1. Flow diagram to determine the need for R&D.

only on the emission factor, but on source extent. Thus, sources cannot be compared on the basis of emission factor alone. The best available emission factors for process sources of fugitive emissions and for open dust sources were selected and presented in Sections 3.2 and 3.3, respectively.

The Nationwide Production Rate--

The production or throughput rate is a measure of the extent of a proces source. A source with a small nationwide production rate may have a comparatively large emission factor while possessing a comparatively small emission rate and consequently, a small air quality impact. Both the emission factor and the production rate are important in estimating air quality impact.

The nationwide production of steel and hot metal and the utilization of raw materials is published on a yearly basis by the Americal Iron and Steel Institute (AISI). These data, along with the best suspended and fine particu late emission factors from Tables 3-4, 3-7, and 3-8 were used to calculate the particulate emission rates for each source as shown in Table 7-1.

The Percent of Fine Particulate--

In this analysis, sources were ranked by the emissions of particles smal than 5 μm in Stokes diameter. This was done for two reasons: (a) only the particles smaller then 5 μm in diameter have any significant potential for transport over distances of regional scale and (b) most adverse health and welfare effects of particulate air pollution are attributable to particles smaller than 5 μm in Stokes diameter.

The percent of particulate smaller than 5 μm in size was determined from the literature and from previous open source tests which MRI has performed to quantify emissions. The values were presented in Sections 3.2 and 3.3. Because of the dearth of particle size information for the sources in question, the "best" value was sometimes the only value. Sometimes it was necessary to estimate the percent of fine particulate.

The Representative Population Density--

If the ranking were to be performed on a localized scale rather than on a nationwide scale, special plant-specific impacts would have to be considere For example, because iron and steel plants are for the most part located in o very near large population centers, the localized impact of a particular facility on an area of high population density may increase the need for control of otherwise low priority sources at that facility.

Figure 7-2 shows representative population density as a function of furnace type. Population density around a steel plant was taken to be the densi of the county in which the steel plant was located. As indicated in the figu the mean population density around BOF shops is greater than around EAF or OH shops.

TABLE 7-1. NATIONWIDE EMISSION RATES FOR FUGITIVE EMISSION SOURCES

Source	1976 Production rate x 10^{-6}	Uncontrolled suspended particulate emission rate	Uncontrolled fine particulate emission rate
A. Process sources			
1. Sintering			
Strand discharge	33 t/yr (36 T/yr)	2,300 t/yr (2,500 T/yr)	570 t/yr (630 T/yr)
Cooler	33 t/yr (36 T/yr)	9,800 t/yr (11,000 T/yr)	2,500 t/yr (2,700 T/yr)
Cold screen	33 t/yr (36 T/yr)	2,300 t/yr (2,500 T/yr)	570 t/yr (630 T/yr)
2. Hot metal transfer	75 t/yr (83 T/yr)	1,500 t/yr (1,700 T/yr)	750 t/yr (830 T/yr)
3. EAF			
All fugitive sources (alloy steel furnace)	5.4 t/yr (5.9 T/yr)	3,500 t/yr (3,800 T/yr)	2,700 t/yr (3,000 T/yr)
All fugitive sources (carbon steel furnace)	15 t/yr (17 T/yr)	25,000 t/yr (28,000 T/yr)	20,000 t/yr (22,000 T/yr)
4. BOF			
All fugitive sources (LD process)	73 t/yr (80 T/yr)	14,000 t/yr (15,000 T/yr)	9,100 t/yr (10,000 T/yr)
5. OHF	21 t/yr (23 T/yr)	1,700 t/yr (1,800 T/yr)	1,200 t/yr (1,300 T/yr)
6. Scarfing			
Machine	12 t/yr (13 T/yr)	30 t/yr (33 T/yr)	27 t/yr (29 T/yr)
Hand	12 t/yr (13 T/yr)	650 t/yr (710 T/yr)	580 t/yr (640 T/yr)
B. Open dust sources			
1. Unloading raw materials			
Iron ore			
Lump	15 t/yr (17 T/yr)	7.0 t/yr (7.7 T/yr)	2.1 t/yr (2.3 T/yr)
Pellet	79 t/yr (87 T/yr)	390 t/yr (430 T/yr)	120 t/yr (130 T/yr)
Coal	72 t/yr (79 T/yr)	1,600 t/yr (1,800 T/yr)	570 t/yr (630 T/yr)
Limestone/ dolomite	20 t/yr (22 T/yr)	460 t/yr (510 T/yr)	160 t/yr (180 T/yr)

(continued)

TABLE 7-1. (continued)

Source	1976 Production rate x 10^{-6}	Uncontrolled suspended particulate emission rate	Uncontrolled fine particulate emission rate
2. Conveyor transfer stations			
Iron ore			
Lump	15 t/yr (17 T/yr)	7.0 t/yr (7.7 T/yr)	2.1 t/yr (2.3 T/yr)
Pellet	79 t/yr (87 T/yr)	390 t/yr (430 T/yr)	120 t/yr (130 T/yr)
Coal	72 t/yr (79 T/yr)	1,600 t/yr (1,800 T/yr)	570 t/yr (630 T/yr)
Limestone/ dolomite	20 t/yr (22 T/yr)	460 t/yr (510 T/yr)	160 t/yr (180 T/yr)
Coke	55 t/yr (61 T/yr)	1,300 t/yr (1,400 T/yr)	440 t/yr (490 T/yr)
Sinter	33 t/yr (36 T/yr)	760 t/yr (840 T/yr)	260 t/yr (290 T/yr)
3. Storage pile activities			
Iron ore			
Lump	15 t/yr (17 T/yr)	1,700 t/yr (1,900 T/yr)	510 t/yr (560 T/yr)
Pellet	79 t/yr (87 T/yr)	8,700 t/yr (9,600 T/yr)	2,600 t/yr (2,900 T/yr)
Coal	72 t/yr (79 T/yr)	5,000 t/yr (5,500 T/yr)	1,500 t/yr (1,700 T/yr)
Limestone/ dolomite	20 t/yr (22 T/yr)	1,200 t/yr (1,300 T/yr)	360 t/yr (400 T/yr)
Coke	55 t/yr (61 T/yr)	2,300 t/yr (2,500 T/yr)	690 t/yr (760 T/yr)
Sinter input materials	43 t/yr (48 T/yr)	8,100 t/yr (8,900 T/yr)	2,400 t/yr (2,600 T/yr)
Slag	23 t/yr (25 T/yr)	2,000 t/yr (2,200 T/yr)	610 t/yr (670 T/yr)
4. Vehicular traffic			
Unpaved roads			
Light duty traffic	8,400,000 km/yr (5,200,000 VMT/yr)	6,100 t/yr (6,800 T/yr)	1,800 t/yr (2,000 T/yr)
Medium duty traffic	5,600,000 km/yr (3,5000,000 VMT/yr)	12,300 t/yr (14,000 T/yr)	4,300 t/yr (4,700 T/yr)
Heavy duty traffic	8,800,000 km/yr (5,500,000 VMT/yr)	25,000 t/yr (28,000 T/yr)	9,700 t/yr (11,000 T/yr)

(continued)

TABLE 7-1. (continued)

Source		1976 Production rate x 10^{-6}	Uncontrolled suspended particulate emission rate	Uncontrolled fine particulate emission rate
	Paved roads	52,000,000 km/yr (32,000,000 VMT/yr)	14,000 t/yr (15,000 T/yr)	17,000 t/yr (17,500 T/yr)
5,	Wind erosion of bare areas	18.6 km^2 4,600 acres	2,700 t/yr (3,000 T/yr)	800 t/yr (900 T/yr)

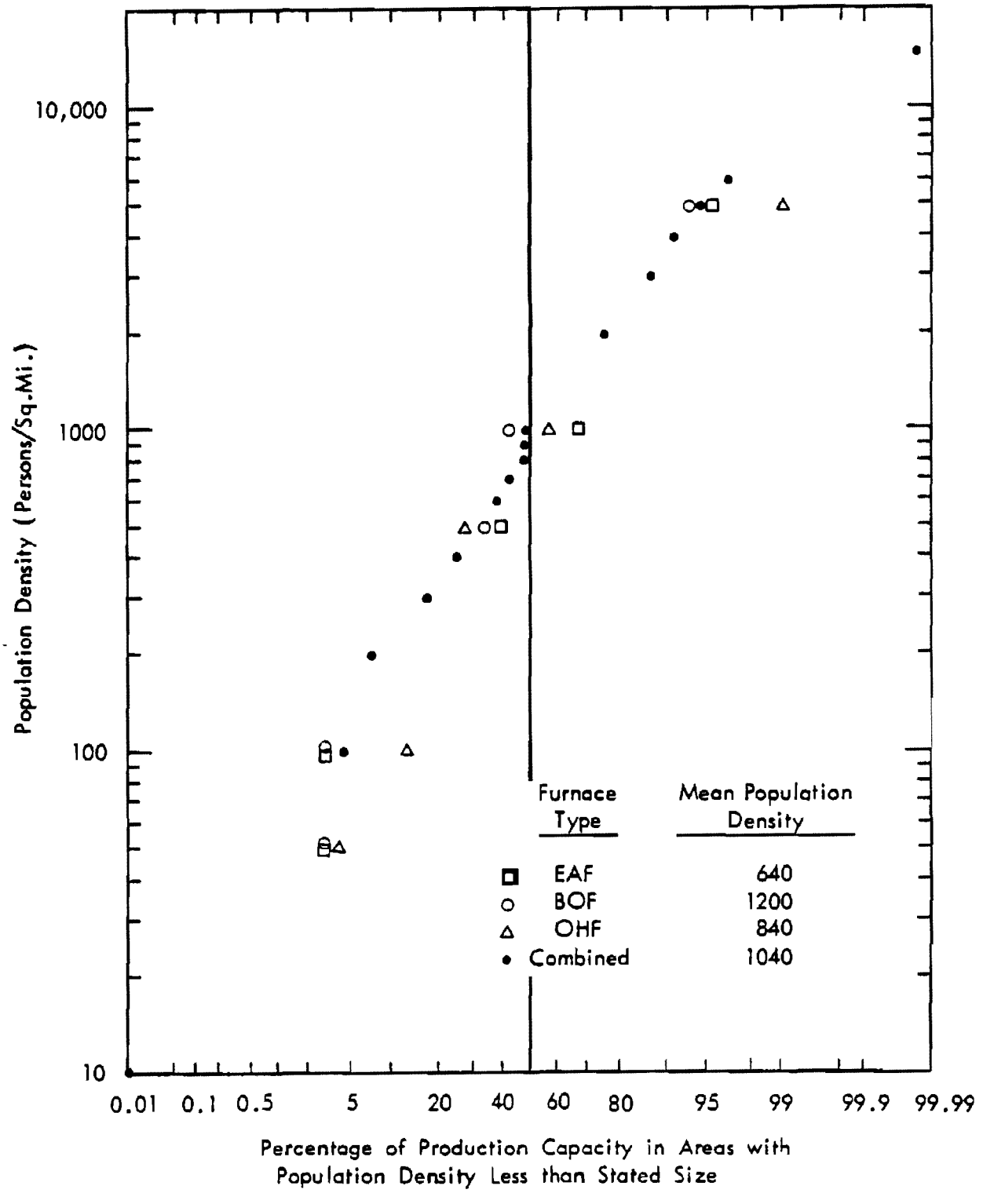

Figure 7-2. Steel production as a function of population density.

7.1.2 Ranking of Control Needs

The sources were ranked based on typically controlled emission rate of fine particulate or suspended particulate calculated as follows:

Typically Controlled Emission Rate = Uncontrolled Emission Factor x (1 - typical control fraction) x nationwide production rate.

This can be reduced to the following form:

Typically Controlled Emission Rate = Uncontrolled Nationwide Particulate Emission Rate x (1 - typical control fraction)

The percentage of fine particulate in the emissions was used to convert suspended particulate emission rates to fine particulate emission rates.

The input values for the latter equation are shown in Table 7-2 and the source rank is presented in Table 7-2 on an individual source basis and source category basis for suspended and fine particulate emission. From Table 7-2, the five fugitive emission source categories with the largest nationwide impact are:

Suspended Particulate Emissions	Fine Particulate Emissions
(1) Vehicular traffic	(1) EAF furnaces
(2) EAF furnaces	(2) Vehicular traffic
(3) Storage pile activities	(3) BOF furnaces
(4) Sintering	(4) Storage pile activities
(5) BOF furnaces	(5) Sintering

7.2 ONGOING RESEARCH

7.2.1 Process Sources

There are presently several research projects in progress that are concerned with fugitive emissions from process sources in the iron and steel industry. Table 7-3 is a summary table listing these ongoing or recently completed projects. As stated in the introduction to this report, coke oven and blast furnace cast-house fugitive emissions were not studied in this investigation because those sources are the focus of other EPA-sponsored studies listed in Table 7-3.

TABLE 7-2. FUGITIVE EMISSION SOURCE RANK ON A NATIONWIDE SCALE BASED ON 1976 PRODUCTION RATES

Source	Estimated typical control fraction	Controlled suspended particulate emission rate	Controlled fine particulate emission rate	Individual source rank		Category-wide source rank	
				Suspended	Fine	Suspended	Fine
A. Process sources							
1. Sintering						4	5
Strand discharge	0.0	2,300 t/yr (2,500 T/yr)	630 t/yr (700 T/yr)	12	14		
Cooler	0.0	9,800 t/yr (11,000 T/yr)	2,700 t/yr (3,000 T/yr)	4	5		
Cold screen	0.0	2,300 t/yr (2,500 T/yr)	630 t/yr (700 T/yr)	13	15		
2. Hot metal transfer	0.0	1,500 t/yr (1,700 T/yr)	750 t/yr (830 T/yr)	16	13	9	8
3. EAF						2	1
All fugitive sources (alloy steel furnaces)	0.0	3,500 t/yr (3,800 T/yr)	2,700 t/yr (3,000 T/yr)	9	6		
All fugitive sources (carbon steel furnaces)	0.0	25,000 t/yr (28,000 T/yr)	20,000 t/yr (22,000 T/yr)	1	1		
4. BOF						5	3
All fugitive sources (LD process)	0.0	14,000 t/yr (15,000 T/yr)	9,100 t/yr (10,000 T/yr)	2	2		
5. OHF						7	6
All fugitive sources	0.0	1,700 t/yr (1,800 T/yr)	1,200 t/yr (1,300 T/yr)	14	10		
6. Scarfing						11	9
Machine	0.0	30 t/yr (33 T/yr)	27 t/yr (29 T/yr)	30	30		
Hand	0.0	650 t/yr (710 T/yr)	580 t/yr (640 T/yr)	24	16		
B. Open dust sources							
1. Unloading raw materials						10	11
Iron ore							
Lump	0.5	3.5 t/yr (3.9 T/yr)	1.0 t/yr (1.1 T/yr)	31	31		
Pellet	0.5	190 t/yr (210 T/yr)	59 t/yr (65 T/yr)	29	29		

(continued)

TABLE 7-2. (continued)

Source	Estimated typical control fraction	Controlled suspended particulate emission rate	Controlled fine particulate emission rate	Individual source rank		Category-wide source rank	
				Suspended	Fine	Suspended	Fine
Coal	0.5	820 t/yr (900 T/yr)	290 t/yr (310 T/yr)	20	21		
Limestone/ dolomite	0.5	230 t/yr (250 T/yr)	82 t/yr (90 T/yr)	26	26		
2. Conveyor transfer stations							
Iron ore						6	7
Lump	0.5	3.5 t/yr (3.9 T/yr)	1.0 t/yr (1.1 T/yr)	32	32		
Pellet	0.5	190 t/yr (210 T/yr)	59 t/yr (65 T/yr)	28	28		
Coal	0.5	820 t/yr (900 T/yr)	290 t/yr (310 T/yr)	21	22		
Limestone/ dolomite	0.5	230 t/yr (250 T/yr)	82 t/yr (90 T/yr)	27	27		
Coke	0.5	650 t/yr (700 T/yr)	220 t/yr (240 T/yr)	23	24		
Sinter	0.5	380 t/yr (420 T/yr)	260 t/yr (290 T/yr)	25	25		
3. Storage pile activities						3	4
Iron ore							
Lump	0.4	1,000 t/yr (1,100 T/yr)	300 t/yr (340 T/yr)	19	20		
Pellet	0.4	5,200 t/yr (5,800 T/yr)	1,600 t/yr (1,700 T/yr)	7	8		
Coal	0.4	3,000 t/yr (3,300 T/yr)	900 t/yr (1,000 T/yr)	11	12		
Limestone/ dolomite	0.4	720 t/yr (780 T/yr)	220 t/yr (240 T/yr)	22	23		
Coke	0.4	1,400 t/yr (1,500 T/yr)	410 t/yr (460 T/yr)	17	18		
Sinter input materials	0.4	4,900 t/yr (5,300 T/yr)	1,400 t/yr (1,600 T/yr)	8	9		
Slag	0.4	1,200 t/yr (1,300 T/yr)	370 t/yr (400 T/yr)	18	19		

(continued)

TABLE 7-2. (continued)

Source	Estimated typical control fraction	Controlled suspended particulate emission rate	Controlled fine particulate emission rate	Individual source rank		Category-wide source rank	
				Suspended	Fine	Suspended	Fine
4. Vehicular traffic						1	2
Unpaved roads							
Light duty traffic	0.5	3,100 t/yr (3,400 T/yr)	900 t/yr (1,000 T/yr)	10	11		
Medium duty traffic	0.5	6,200 t/yr (7,000 T/yr)	2,200 t/yr (2,400 T/yr)	6	7		
Heavy duty traffic	0.5	13,000 t/yr (14,000 T/yr)	4,900 t/yr (5,500 T/yr)	3	3		
Paved roads	0.5	7,000 t/yr (7,500 T/yr)	3,500 t/yr (3,800 T/yr)	5	4		
5. Wind erosion of exposed areas	0.4	1,600 t/yr (1,800 T/yr)	480 t/yr (540 T/yr)	15	17	8	10

TABLE 7-3. SUMMARY OF ONGOING OR RECENTLY COMPLETED RESEARCH PROJECTS CONCERNING PROCESS SOURCES OF FUGITIVE EMISSIONS

Source	Project title	EPA contractor
1. Coke manufacture	· Development and demonstration of concepts for improving coke oven door seals	Battelle-Columbus
	· Guidelines for application of coke oven pollution control systems	Mitre Corporation
	· Enclosed coke pushing and quenching system demonstration, Phase II	National Steel
	· Sampling of coke oven door leakage	Battelle-Columbus
	· Air pollution impact of coke quenching	York Research Corporation
	· Smokeless coke oven charging demonstration	Jones & Laughlin Steel
2. Iron manufacture	· Blast furnace cast house emission control	Betz
3. Sinter manufacture	· Sinter plant wind box gas recycle system demonstration, Phase II	National Steel
4. BOF	· Development of technology for control of BOP charging emissions	National Steel
5. General	· Environmental assessment of ferrous metallurgical processes and environmental control techniques	Research Triangle Institute
	· Study of discharge causing abnormal operating conditions in the iron and steel industry	Research Triangle Institute

(continued)

TABLE 7-3 (continued)

Source	Project title	EPA contractor
5. General (continued)	· Control program guidelines for industrial process fugitive particulate emissions	PEDCo
	· Development of procedures for the measurement of fugitive emissions	TRC

Table 7-3 shows that extensive research dollars and effort are presently being invested in studying the nature and control of coke oven emissions. Oven door leaks, pushing, quenching and charging emissions are being thoroughly studied.

In actuality, none of the other process sources of fugitive emissions are being studied with the concerted effort that is being applied to coke manufacture. There is one major research project each for iron manufacture, sinter manufacture, and BOF steel manufacture, with no studies specifically concerning EAF and OHF fugitive emissions and control.

Finally, there is a series of general studies with broad scopes. These studies will help to identify other specific areas of research that require attention.

7.2.2 Open Dust Sources

The main method utilized to identify current research programs dealing with open dust sources was a computerized search of the Smithsonian Scientific Information Exchange. Key words utilized in this search were: (a) air pollution and dust particulates; (b) air pollution dust or particulates--industrial sources; and (c) air pollution--dust air pollution control. Also, contact was made with EPA and AISI officials to obtain information concerning ongoing research programs.

Table 7-4 lists the research programs that were identified. Contact was made with the various project officers and/or principal investigators and information concerning the particular scope of work and current results was requested. It should be noted that a majority of these current research projects are not related directly to the iron and steel industry. The results of the various projects, however, can be applied to a certain extent to open dust sources in the iron and steel industry.

Materials Handling and Storage Pile Activities--

The University of Minnesota is performing a program to assess the control efficiencies of various soil stabilizing compounds used to control the wind erosion of taconite tailings. The project is funded by the Bureau of Mines, Mining Research Center. Dr. D. H. Yardley is the principal investigator. He is performing wind tunnel tests using various soil stabilizing compounds applied to both coarse and fine tailings materials. The program was scheduled for completion during the fall of 1977.

The Minnesota Regional Copper-Nickel Study is assessing the environmental effects of future mining in the state. Dr. Darrel Thingvolv is the principal investigator. Fugitive dust emissions from various storage pile and transfer operations will be studied. Minimal field work is planned for the actual testing of fugitive dust emissions. Limited particulate air sampling was scheduled for completion by the fall of 1977.

TABLE 7-4. SUMMARY OF ONGOING RESEARCH PROJECTS CONCERNING OPEN DUST SOURCES

Source	Project title	Performing agency
Materials handling and storage pile activities	Assessment of control efficiencies of various dust suppressants used to control taconite tailings piles	University of Minnesota
	Assessment of environmental effects of future mining (Minnesota copper-nickel study)	Minnesota interagency task force
	Asbestos emissions from waste tailings piles	Illinois Institute of Technology Research Institute (EPA study)
Vehicular traffic	Measurement and control of air pollution produced by highway construction operations and related industries	California State Transportation Laboratory
	Testing of fugitive dust emissions from heavy-truck traffic at western coal strip mines	University of Idaho
Wind erosion of exposed areas	Wind erosion study of exposed areas and tailings piles found in western open mining developments (proposed project)	National Center of Atmospheric Research

The Illinois Institute of Technology Research Institute has analyzed the fugitive dust problems associated with asbestos waste tailings. Various tailings pile surface stabilizing chemicals were tested to determine control efficiencies for both active and inactive storage piles. Ms. Mary Stinson was the EPA project officer for the majority of the research effort.

Vehicular Traffic--

The California State Transportation Laboratory is performing a Federal Highway Administration program entitled "Measurement and Control of Air Pollution Produced by Highway Construction Operations and Related Industries." Mr. C. R. Sinquist is the principal investigator. Areas of this program which are potentially applicable to the iron and steel industry include: (a) testing to determine the air quality impact of heavy-duty vehicles traveling on unpaved and paved roadways, and (b) the transfer and movement of aggregate materials by trucks and front-end loaders. The approach taken in the testing effort is basic upwind/downwind sampling with high-volume filtration samplers. Particle sizing and particle drift distances are also being studied. The project was scheduled for completion by September 1977.

The University of Idaho is conducting a project to assess the fugitive dust emissions generated from heavy-duty vehicles used in western coal strip mines. The project is funded by the U.S. Department of Agriculture, Forest Service, as a part of the Agency's Surface Environment and Mining (SEAM) Studies assessing the impact of mining related air and water emissions. Dr. George Belt is the principal investigator. Dr. Belt is proposing to test the emissions generated from heavy-duty vehicles by attaching a trailer behind a large truck. A vertical and horizontal array of high-volume filtration samplers will be placed upon the trailer. The testing project is to cover: (a) fugitive dust emissions generated by vehicles upon dry unpaved roadways and (b) control efficiency of road watering. Actual testing was to be carried out in the fall of 1977.

Wind Erosion of Open Areas--

Wind erosion emissions studies of both exposed areas and mining-related tailings piles will be performed in the future by Dr. Gillette of the National Center of Atmospheric Research. This is another SEAM project funded by the USDA Forest Service. Wind erosion of topsoil and spoils piles will be tested by utilizing a portable wind tunnel. Testing will be performed at various western coal strip mine sites.

Summary--

It is evident from the previously mentioned research projects that few research programs specific to open dust sources in the iron and steel industry are being conducted. While many industry-funded projects may be under way, they are usually not publicized.

7.3 ADDITIONAL RESEARCH NEEDS

7.3.1 Process Sources

At the inception of this project, the work statement implied that control of process fugitive emissions would require development of substantially new control technology. The question thought to be important at that time was: given the highest ranked process sources of Section 7.1, and given the current research efforts, what are the most important univestigated sources requiring research to develop adequate control technology? In the course of this study, however, it became clear there already exists control technology for the major process fugitive emission sources. Consequently, the important question is: what is the efficiency and cost of available fugitive emission controls when applied to the sources being considered? The question of cost and efficiency of a control device as a function of the influencing variables are portrayed as steps 6 and 7 in Figure 7-1.

The variables affecting the efficiency of a process fugitive emissions control option are:

- Face area of capture device
- Face velocity through capture device
- Size of source (e.g., tons of furnace capacity or ladle capacity)
- Degree of obstruction between capture device and furnace
- Strength of crosscurrents
- Distance between furnace and capture device
- Thermal buoyance of plume

The variables affecting a given control device retrofit cost and, to a lesser extent, a new design cost, are:

- Flow rate through control device
- Amount of building support necessary to sustain extra load
- Amount of ductwork necessary to reach removal device

The process sources ranked highest on the basis of control need are:

- EAF (charging, tapping, slagging and electrode port leakage).

- Sintering (strand discharge, cooler discharge, screening, and transfer stations).

- BOF (charging, tapping, slagging, puffing and lance port leakage).

- Hot metal transfer stations (torpedo car to ladle, torpedo car to mixer, and mixer to ladle).

Table 7-5 shows the control options available for these process sources. It is these controls for which additional research into cost-effectiveness is recommended. For each source the control options have been subjectively ranked according to the potential for favorable cost-effective control.

7.3.2 Open Dust Sources

Various control methods for open dust sources are currently being applied to a limited extent within the iron and steel industry; however, data needed to assess the effectiveness these control methods have not been adequately compiled. Although a number of these currently implemented control methods appear to be viable, these methods cannot be adequately assessed until accurate control efficiencies, operating parameters and operating costs have been carefully analyzed. Deficiencies of the control technologies currently available for open dust sources are discussed in the following subsections.

Materials Handling--

Methods utilized to reduce the dust emissions from unloading of materials from barges and railcars and from conveyor networks include (a) total or partial enclosures and (b) spray systems. To adequately assess the control options presented in Section 6.1, actual operating control system efficiencies and specific initial and annual operating costs are needed.

Storage Pile Activities--

Various control methods, presented in Section 6.2 to 6.5, are available to reduce fugitive dusts associated with the open storage of raw, intermediate, and waste materials. Control technology deficiencies are presented below for the storage pile activity functions of load-in, vehicular traffic, wind erosion, and load-out.

Load-in--Control options which mitigate dust emissions from material load-in include (a) reduce drop distance, (b) enclosures, and (c) spray systems. Adequate control efficiencies and initial and operating costs are needed before specific recommendations can be made pertaining to these methods.

Vehicular traffic around storage piles--Applicable control methods for reducing fugitive dust emissions generated by front-end loaders and trucks

TABLE 7-5. FUGITIVE EMISSIONS CONTROL OPTIONS RECOMMENDED FOR ADDITIONAL RESEARCH

Source	Control option
EAF	· Total enclosure · Canopy hoods · Tapping ladle hoods · Building evacuation
BOF	· Total enclosure · Gaw damper, furnace tilt minimization and baffles · Canopy and local hoods · Building evacuation
Sintering	· Local hoods
Hot metal transfer	· Close fitting ladle hood · Canopy hood · Partial building evacuation

within the storage pile areas are essentially the same as for unpaved roadway traffic. These control methods include (a) area watering or oiling, (b) area addition of surface stabilizing compounds, and (c) proper "housekeeping" procedures. The deficiencies of these control methods are discussed below in the section on vehicular traffic on plant roadways.

Wind erosion from storage piles--Control methods for wind erosion from open storage piles, as presented in Section 6.4, include (a) stabilizing the pile surface layer and (b) enclosures. The control efficiencies for these various methods must be determined as a function of (a) surface application rate, (b) reapplication needs, (c) climate, and (d) the configuration of windbreaks. Operating cost data are needed for a complete assessment of the various control methods.

Load-out--Methods of fugitive dust control for the load-out process are: (a) reduction of material disturbance and (b) spray systems. Specific methods presented in Section 6.5 lack adequate control efficiency data. Efficiency data are needed for further assessment of these control systems, along with (a) equipment specifications, (b) additional required materials (conveyors, chemical dust suppressants), and (c) operating costs.

Vehicular traffic on plant roadways--Mitigative measures which reduce unpaved roadway fugitive emissions include (a) dust suppressants and (b) improvement of the road surface (Section 6.6). Visual observations indicate that watering, oiling, and the addition of chemical suppressants greatly reduce vehicular fugitive dust emissions. However, adequate quantification of the efficiencies of these control methods is needed to assess the relative effectiveness of these mitigative measures as a function of the cost of control. Field tests are needed to determine control efficiency as a function of: (a) application rate and frequency, (b) vehicle usage, (c) road surface material, and (d) climatic factors.

Fugitive dust emanating from paved road surfaces is a relatively minor emission source. However, as the paved roadway collects surface particulates, the potential for large quantities of vehicle-generated dust increases. Road surface cleaning devices are effective in removing visible surface particulates. However, the control efficiencies and costs associated with the various roadway cleaning devices are not adequately developed to permit assessment of the relative merits of broom sweeping, road vacuuming or water flushing techniques (Section 6.7).

Wind erosion from exposed areas--Mitigative techniques that are available to reduce the impact of emissions generated by wind erosion of exposed areas as presented in Section 6.8 include surface stabilization and utilization of windbreaks to reduce the eroding force of the wind. To adequately assess the effectiveness of the various control systems, control efficiency data are

needed as a function of application rates for the surface stabilizers and windbreak configuration.

7.4 COST-EFFECTIVENESS ANALYSIS

In defining the optimal program for research and development of control technology directed to the critical control needs, analysis of control cost-effectiveness is essential. This section presents example derivations of cost-effectiveness functions (expressed as dollars per pound of reduced fine particl emissions) for a process source (canopy hood system for an electric arc furnace and an open dust source (several control measures applied to an unpaved road). Cost evaluated include (a) annualized costs of equipment purchase and installation and (b) annual operating costs.

7.4.1 Canopy Hood System for Electric Arc Furnaces

This section presents a derivation of the cost per pound of controlling emission from an electric arc furnace shop producing 510,000 T/yr of raw carbon steel. Actual December 1976 installed costs, as presented in Table 5-5, are used to estimate costs, after being adjusted to reflect the difference in the size of the two shops. Maintenance and operation costs were not available.

The calculation of the yearly cost per pound of fine particulate captured requires the following assumptions and calculations:

- Type of operation: EAF shop.
- Size of furnaces: two 290-ton.
- Type of steel made: plain carbon.
- Mode of operation: one operating, one down.
- Heat time: 5 hr tap to tap.
- Shop operation period: 52 weeks/year, 7 days/week, 24 hr/day.
- Annual shop production: 510,000 T/year.
- Fugitive emission control system: canopy hoods over charge and tap sides vented to baghouse.
- Primary control device: DSE.
- Total installed cost for fugitive system. $6,690,000.

- Equipment life estimate: 10 years.
- Annual investment rate: 10%/year.
- Interest and tax rate: 10%/year.
- Annualized cost of fugitive emission control system: 20% of total installed cost = $1,338,000.
- Uncontrolled, fine particulate emission factor: 2.6 lb/T.
- Capture device efficiency: 70%.
- Pounds of fine particulate captured annually: 928,000 lb/year.

Based on the above assumptions and calculations, the annualized cost per pound of fine particulate captured is $1.44/lb/year. It must be pointed out, however, that were the cost of DSE system and the fine particulate it removes included with the canopy hood system, the cost effectiveness would be much improved.

7.4.2 Unpaved Road Vehicular Traffic

The rationale used to determine cost effectiveness of various fugitive dust control methods for plant vehicles traveling upon unpaved roadways is presented in this section. The basis for this example cost effectiveness analysis follows:

1. Source extent data (6.3 miles of unpaved road and plant vehicle mix) are the averages from four open dust surveys (Section 4.0)

2. Based on the above information, the annual emissions of fine particulate from unpaved roads are calculated to be 706,000 lb/year.

3. The unpaved roadway dust control methods, efficiencies and costs are those found in Section 6.6 of this report.

4. The investment or initial costs for the control methods are annualized over a 10-year period. The annualized investment costs were calculated by multiplying the initial costs found in Section 6.6 of this report by a factor of 0.2 to account for a 10-year lifetime, interest and taxes.

Table 7-6 presents the results of the control cost-effectiveness analysis for unpaved roads. An example calculation of control cost effectiveness for watering of unpaved roads follows.

TABLE 7-6. UNPAVED ROADWAY CONTROL COST EFFECTIVENESS

Control method	Estimated control efficiency (%)	Fine particulate emissions reductions (lb/year)	Annualized investment cost ($)	Annual operating cost ($)	Annualized investment cost effectiveness ($/lb)	Annual operating cost effectiveness ($/lb)
Watering	50	353,193	2,000	20,000	0.006	0.06
Oiling	75	529,789	3,200	189,000	0.006	0.4
Dust suppressant (Coherex)	90	635,747	10,700	53,600	0 02	0.08
Oil and double chip surface	80	565,108	11,300	18,900	0.02	0.03
Paving	90	635,747	49,100	49,100	0.08	0.08

a/ Based on a plant having 6.3 miles of unpaved roadways and the average vehicle mix of this study's four open dust surveys.

1. The uncontrolled fine particulate emission rate is 706,000 lb/year.

2. The estimated control efficiency for watering is 50%.

3. The reduction of fine particulate emissions per year by road watering is 706,000 lb/year x 50% = 353,000 lb.

4. The initial investment cost for a watering truck is $10,000. Multiplying this value by 0.2 to account for a 10-year interest and taxes gives $2,000 per year annualized investment.

5. The annual operating cost is $20,000.

6. Annualized investment and annual operating cost effectiveness are obtained by dividing the annualized investment and annual operating costs by the annual fine particulate emissions reductions realized by unpaved roadway watering.

Annualized investment cost effectiveness	Annual operating cost effectiveness
$\frac{\$2,000}{353,000\ lb}$ = $0.006/lb reduction	$\frac{\$20,000}{353,000\ lb}$ = $0.06/lb reduction

7.4.3 Comparison of Cost Effectiveness

Table 7-7 presents a comparison of cost-effectiveness for the example process source (an EAF canopy hood control system) and three major open dust sources. Example cost effectiveness calculations presented in Sections 7.4.1 and 7.4.2 were provided to aid in the understanding of this analysis.

Two rankings relating the annualized investment costs and annual operating costs of various control methods are given in Table 7-6. It is evident from this analysis, that the majority of the open dust source control methods have a more favorable cost-effectiveness than the example process source control method.

7.5 SUGGESTED RESEARCH PROGRAMS

7.5.1 Process Sources

Based on this investigation, several specific research needs have become evident. The research needs are:

TABLE 7-7. COST EFFECTIVENESS OF FUGITIVE EMISSIONS CONTROL METHODS

Source	Control method	Estimated control efficiency (%)	Annualized investment cost ($/lb)[a]	Ranking order [ ]	Annual operating cost ($/lb)[a]	Ranking order [ ]
Process						
EAF	Canopy hoods	70	1.44	[8]	NA	-
Open dust						
Storage pile activities	Utilize mobile stacker/reclaimer combination rather than front-end loader activity for pellet piles	80	8.68	[9]	NA	-
Load-in/ load-out						
Wind erosion from storage piles (lump iron ore)	Watering	80	0.02	[4]	NA	-
	Chemical stabilizers (Coherex 20% solution)	97	0.02	[4]	0.008	[1]
Vehicular traffic						
Unpaved roadways	Watering	50	0.006	[2]	0.06	[5]
	Road oil	75	0.006	[2]	0.4	[7]
	Oil and double chip	80	0.02	[4]	0.03	[3]
	Chemical stabilizers (Coherex)	90	0.02	[4]	0.08	[6]
	Paving	90	0.08	[5]	0.08	[6]
Paved roadways	Broom sweeping	70	0.005	[1]	0.05	[4]
	Vacuum sweeping	75	0.01	[3]	0.06	[5]
	Road flushing	80	0.006	[2]	0.05	[4]
Wind erosion from exposed areas	Watering	50	0.21	[7]	0.01	[2]
	Chemical stabilizers[b]	70	0.16	[6]	0.05	[4]
	Oiling	80	0.02	[4]	NA	-
	Paving with cleaning	95	0.01	[3]	NA	-

NA = Not available.

a/ Dollar per pound reduction of fine particulate per year.

b/ No specific chemical stabilizer given; 70% control efficiency is assumed to be the average of all available chemical stabilizers for this control purpose.

1. Acquisition of detailed reports of methodology from those who have measured emission factors and failed to adequately report the measurement techniques. From Table 3-2, the measured sources lacking adequate published measurement technique descriptions are sinter cooler, BOF charging, BOF tapping, BOF total emissions, OHF total emission, EAF total emissions, and hot metal transfer emissions.

2. Development and promulgation of reference techniques for measurement of fugitive emissions from major sources.

3. Quantification of emission factors for important sources which have never been experimentally quantified. These sources can be identified from Table 3-1 as those with estimated but not measured values, such as sinter strand discharge, sinter cold screening, and machine and hand scarfing. Also sources with no measured or estimated values (e.g., teeming) might be quantified.

4. Cost-effectiveness analysis of control methods as a function of the independent variables listed in Section 7.3.1. The controls recommended for study are listed in Table 7-5.

An example of a proposed research program under research area (4) is presented below for the two most important process sources, BOFs and EAFs. Figure 7-3 is a task diagram for this example program.

The objective of the project would be to select and define the typical and best controls for all fugitive emissions from BOF and EAF furnaces. The best control does not necessarily have to be demonstrated, but if it is not demonstrated, economic feasibility must be well substantiated. The typical and best controls for each furnace must be defined in detail.

The initial task would consist of a survey of the current literature to ascertain what controls have been applied. EAF and BOF processes and their variations would be thoroughly analyzed as part of this task.

The second task would consist of a phone survey of at least 50% of the BOF and EAF shops in the United States. Preference would be given to the highest capacity shops. The capture devices utilized by each shop for charging, tapping, and slagging emissions would be tabulated. All those shops with no controls would also be listed. For those shops with control, general data such as capture efficiency estimates, removal device and efficiency, actual flow rates and temperature, capital and total installed costs, and system auxiliary equipment identification would be acquired. Visits to selected plants would be performed to provide proper perspective and understanding of the systems. Selection of plants for visits would be based on a preliminary estimate of typical and best controls.

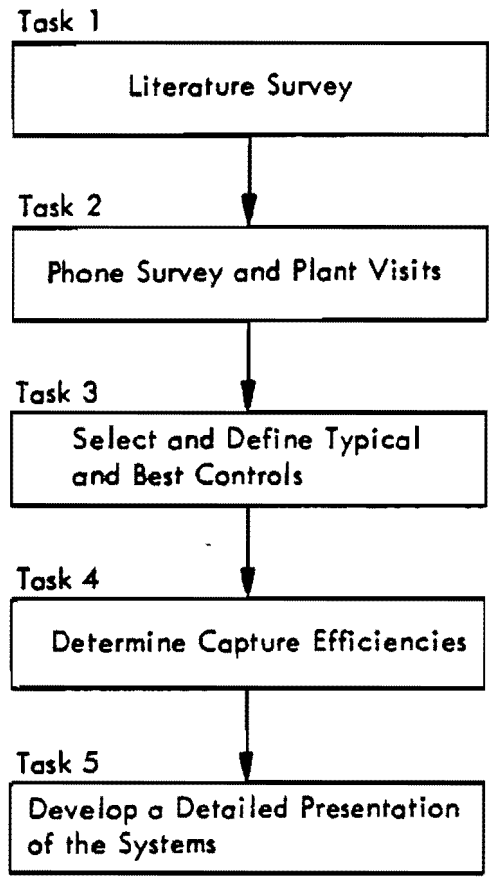

Figure 7-3. BOF and EAF research program structure.

Based on the literature search, personal and telephone contacts, and plant visits, the typical and best control techniques for each furnace type would be selected, in the third task. Specific shops would be identified which most nearly represent the typical and best control processes.

Capture efficiencies noted from the specific and best controlled shops identified in the third task would be determined in the fourth task. If possible, empirical and theoretical expressions would be utilized to calculate the capture efficienceis under all expected conditions. Field sampling to acquire necessary input data would be performed.

In the final task, elevation, plan and detail drawings for the typical and best control techniques would be developed for each furnace type. A detailed engineering analysis of each system would also be presented.

7.5.2 Open Dust Sources

Suggested research programs for open dust sources should strive to establish control efficiencies and costs of available control methods as a function of specific operating parameters. The criteria utilized for selecting specific open dust sources for suggested research programs are based on: (a) ranking of the critical control needs (Section 7.1); (b) deficiencies of current open dust emission control methods, specified in Sections 6.0 and 7.3.2; and (c) the extent of current research on open dust sources.

Basis for Source Selection--

Section 7.1 utilized a nationwide ranking scheme to determine the most critical areas or processes requiring the development and demonstration of effective control techniques. From this ranking (Table 7-2) the 10 major fugitive emission categories of fine particulate on a nationwide scale were indicated as being:

- Electric arc furnaces
- Vehicular traffic*
- Basic oxygen furnaces
- Storage pile activites*
- Sintering
- Open hearth furnaces
- Conveyor transfer stations*

* Open dust sources.

- Hot metal transfer
- Scarfing
- Wind erosion of exposed areas*

As indicated four open dust source categories (vehicular traffic, storage pile activities, materials handling, and wind erosion of exposed areas) rank among the top 10 sources in importance.

As indicated in Section 7.3.2 inadequate data exist for the proper assessment of available control methods for vehicular traffic, storage pile activities, and material handling. Once current control methods are properly assessed, their applicability to the iron and steel industry can be more throughly stated.

Current research of open dust sources in the iron and steel industry is practically nonexistent. There are research programs being performed in the surface mining industry which may prove beneficial to the iron and steel industry. Current research on vehicular traffic includes emission factor development for heavy duty vehicles on unpaved mine roadways and the testing of unpaved roadway watering programs. Research projects dealing with storage pile activity source area consist mainly of the testing of stabilizing compounds for tailings.

While these research programs are indirectly related to the iron and steel industry, the applicability of results may be limited. Vehicles and roadways in the surface mining industry are quite different from those found in the iron and steel industry. Storage and tailings piles in the mining industry are relatively inactive, while storage piles in the iron and steel industry have nearly continuous turnover rates. Thus, solutions to fugitive dust problems in the surface mining industry may not be applicable to similar problems in the iron and steel industry. What is needed is a concentrated effort to analyze the fugitive dust problems and potential control techniques for vehicular traffic, storage pile activities, and materials handling associated with integrated iron and steel plants.

Research and Development Programs--

The following research and development programs are recommended to evaluate the effectiveness of control techniques applicable to major open dust sources which exist within integrated iron and steel plants. These programs focus on field testing various control methods to determine: (a) control efficiencies, and (b) operating parameters and cost effectiveness.

---

* Open dust sources.

Vehicular Traffic on Unpaved Roadways--

An R&D program is recommended to assess the effectiveness of various control methods to mitigate dust emissions from vehicles traveling on unpaved roads. Initial evaluations would focus on two control techniques--watering and chemical dust suppressants.

Industry-wide source characteristics would be analyzed to determine representative conditions of roadway surface (silt, moisture and density) and traffic (vehicle count by weight and speed ranges), so that representative test roadway parameters may be defined.

Uncontrolled emission factors for vehicular traffic on two different surfaces (slag and dirt) would be measured utilizing the MRI Exposure Profiling technique. Tests would also be performed on adjoining sections of the test roadway to which water or chemical dust suppressants (Coherex and another to be determined) have been applied. Control efficiency would be determined as a function of application intensity (gal./yard^2) and time since last application. In addition, TSP and particle size concentrations would be measured downwind of each test roadway segment to determine air quality impact reduction due to controls. Finally, control cost-effectiveness functions would be determined based on measured control efficiency and costs for various levels of control.

Storage Pile Activities--

An R&D program is recommended to assess the effectiveness of mitigative measures in reducing dust emissions from material load-in, vehicular traffic around storage piles, wind erosion of storage piles and load-out. This program would study fugitive emissions associated with storage piles as a system and with separate activities.

First, the air quality impact of combined storage pile activities as a system would be determined. Upwind and downwind TSP and particle size measurements would be performed on an active storage area to note the air quality effect of various activity levels and meteorological conditions.

Second, source specific testing would be performed on uncontrolled and controlled sources within the storage pile area to note emission factors and control efficiencies. The costs associated with the tested control measures would be obtained for use in cost-effectiveness functions. An example source specific testing program to determine cost effectiveness for wind erosion of storage piles follows.

Wind Erosion of Storage Piles--

An R&D program recommended to assess the effectiveness of mitigative measures in reducing fugitive dust emissions resulting from wind erosion of storage piles would focus on two control techniques--watering and chemical dust

suppressants. Industry-wide source characteristics would be analyzed to determine representative storage pile parameters such as physical material silt, moisture, density, and pile configuration.

Uncontrolled emission factors for storage pile wind erosion would be measured for a range of wind speeds, utilizing the MRI Exposure Profiling technique. Control efficiency testing would be performed to assess the merits of watering and chemical dust suppressants.

In addition, TSP and particle size concentrations would be measured downwind of each test pile to determine air quality impact reduction due to controls Finally, control cost-effectiveness functions would be derived from measured control efficiencies and costs for various levels of control.

Materials Handling--

An R&D program is recommended to: (a) assess the effects of changes in operating parameters on emission levels from materials handling operations; and (b) determine the cost effectiveness of control measures in reducing emissions.

Areas of study would include: (a) identifying industry-wide source characteristics; (b) assessing activity factors of each operation; (c) establishing uncontrolled emission rates; (d) assessing materials handling control techniques and costs; and (e) establishing the downwind TSP and particle size concentration reductions from the implementation of controls.

Industry-wide source characteristics would be analyzed to identify: (a) representative types and operating parameters of equipment utilized for materials handling; and (b) representative physical characteristics of the materials transferred: silt content, moisture content, and density.

Relative activity levels would be related to a standard such as, drop height, mass of material handled, or conveyor speed. Uncontrolled emission factors would be measured for the following materials handling operations: railcar unloading, barge unloading, conveyor transfer stations, and conveyor screening stations. MRI's Exposure Profiling technique would constitute the primary emissions test method.

Materials handling control techniques would be surveyed to determine potentially effective dust suppression systems and/or altered operating procedures. Controlled operations would be field tested to determine control efficiencies and downwind air quality impact. Finally, control effectiveness functions would be determined based on measured control efficiency and cost for various levels of control.

SECTION 8.0

REFERENCES

1. Varga, J., and H. Lownie. A Systems Analysis Study of the Integrated Iron and Steel Industry. Battelle Memorial Institute, Columbus, Ohio, 1969.

2. Vatavuk, W. M., and L. K. Felleisen. Iron and Steel Mills. In: Compilation of Air Pollutant Emission Factors. AP-42, U.S. Environmental Protection Agency, Research Triangle Park, North Carolina, 1976.

3. Rehmus, F. H., D. P. Manka, and E. A. Upton. Control of H_2S Emissions during Slag Quenching. Journal of the Air Pollution Control Association, 23(10):864-869, 1973.

4. Steiner, B. A. Air Pollution Control in the Iron and Steel Industry. International Metal Review, (9):171-192, 1976.

5. Anonymous. Evolution of Iron and Steelmaking. In: The Making, Shaping, and Treating of Steel, H. E. McGannon, ed. 9th Edition, 1971. p. 34.

6. Energy and Environmental Analysis, Inc. Economic Impact of New Source Performance Standards on Sinter Plants. Final Draft Report Prepared for the U.S. Environmental Protection Agency, April 1977. 86 pp.

7. Anonymous. Scrap for Steelmaking. In: The Making, Shaping, and Treating of Steel, H. E. McGannon, ed. 9th Edition, 1971. p. 254.

8. Reference 1, p. V-5.

9. American Iron and Steel Institute. 1976 Annual Statistics of the AISI. Washington, D.C., 1977. pp. 67-71.

10. Emission Standards and Engineering Division. Background Information for Standards of Performance: Electric Arc Furnaces in the Steel Industry, Volume 1: Proposed Standards. EPA-450/2-74-017a, U.S. Environmental Protection Agency, Research Triangle Park, North Carolina, 1974. pp. 4-6.

11. Reference 1, p. C-166.

12. Chepil, W. S., F. H. Siddoway, and D. V. Ambrust. Climatic Index of Wind Erosion Emissions in the Great Plains. Soil Science Society of America Proceedings, 27(4):449-452, 1963.

13. Kalika, P. W., R. E. Kenson, and P. T. Bartlett. Development of Procedures for the Measurement of Fugitive Emissions. EPA-600/2-76-284, U.S. Environmental Protection Agency, Research Triangle Park, North Carolina, 1976.

14. Cowherd, C., Jr., K. Axetell, Jr., C. M. Guenther, and G. Jutze. Development of Emission Factors for Fugitive Dust Sources. EPA-450/3-74-037, U.S. Environmental Protection Agency, Research Triangle Park, North Carolina, 1974. 172 pp.

15. Lundgren, D. A., and H. J. Paulus. The Mass Distribution of Large Atmospheric Particles. Paper No. 73-163, Presented at the 66th Annual Meeting of the Air Pollution Control Association, Chicago, Illinois, June 24-28, 1973.

16. Turner, D. B. Workbook of Atmospheric Dispersion Estimates. AP-26, U.S. Environmental Protection Agency, Research Triangle Park, North Carolina, 1970.

17. Blackwood, T. R., T. F. Boyle, T. L. Peltier, E. C. Eimutis, and D. L. Zanders. Fugitive Dust from Mining Operations. For the U.S. Environmental Protection Agency, Contract No. 68-02-1320, Task 6, May 1975.

18. Cowherd, C., Jr., C. Maxwell, and D. Nelson. Quantification of Dust Entrainment from Paved Roadways. EPA-450/3-77-027, U.S. Environmental Protection Agency, Research Triangle Park, North Carolina, 1977. 78 pp.

19. Schueneman, J. J., M. D. High, and W. E. Bye. Air Pollution Aspects of the Iron and Steel Industry. Public Health Service Publication No. 999-AP-1, U.S. Department of Health, Education, and Welfare, Cincinnati, Ohio, 1963. p. 33.

20. American Iron and Steel Institute. Source Data for Steel Facility Factors. Final Prepared July 13, 1976.

21. Speight, G. E. Best Practicable Means in the Iron and Steel Industry. The Chemical Engineer, (3)·132-139, 1973.

22. Nicola, A. G. Fugitive Emission Control in the Steel Industry. Iron and Steel Engineer, 53(7):25-30, 1976.

23. Cowherd, C., Jr., and C. M. Guenther. Development of a Methodology and Emission Inventory for Fugitive Dust for the Regional Air Pollution Study. EPA-450/3-76-003, 1976. 84 pp.

24. McCutchen, G., and R. Iversen. Steel Facility Factors. U.S. Environmental Protection Agency, Research Triangle Park, North Carolina, Prepared 1975 and Revised December 8, 1976.

25. Lindau, L., L. Hansson, and B. Mansson. Fugitive Dust from Steel Works. Solna, June 1976. p. 11.

26. Anonymous. Control Techniques for Particulate Pollutants. AP-51, U.S. Environmental Protection Agency, Research Triangle Park, North Carolina, 1969. pp. 14-16.

27. Thaxton, L. A. Kish and Fume Control and Collection in a Basic Oxygen Plant. Journal of the Air Pollution Control Association, 20(5):293-296, 1970.

28. Anonymous. Metallurgical Equipment. In: Air Pollution Engineering Manual, J. A. Danielson, ed. AP-40, U.S. Environmental Protection Agency, Research Triangle Park, North Carolina, 1973. pp. 255-293.

29. Mann, C. O., and C. C. Cowherd, Jr. Fugitive Dust Sources. In: Compilation of Air Pollutant Emission Factors. AP-42, U.S. Environmental Protection Agency, Research Triangle Park, North Carolina, 1976. pp. 11.2-1ff.

30. Gillette, D. A. Production of Fine Dust by Wind Erosion of Soil: Effect of Wind and Soil Texture. From Proceedings of the Symposium on Atmospheric Surface Exchange of Particulate and Gaseous Pollutants (1974), 1976. pp. 591-609.

31. U.S. Department of Commerce. Climatic Atlas of the United States. Environmental Science Services Administration, Environmental Data Service, 1968. 80 pp.

32. Bagnold, R. A. The Physics of Desert Sands and Blown Dunes. Methuen, London, 1941. 265 pp.

33. Reference 10, p. 40.

34. Kaercher, L. T., and J. D. Sensenbaugh. Air Pollution Control for an Electric Furnace Melt Shop. Iron and Steel Engineer, 51(5):47-51, 1974.

35. Reference 10, p. 27.

36. Reference 10, p. 55.

37. Reference 10, p. 94.

38. Reference 10, p. 44.

39. Reference 10, p. 97.

40. Alfonso, J. R. F. *Estimating the Costs of Gas Cleaning Plants.* Chemical Engineering, (12):86-96, 1971.

41. Wilcox, M. S., and R. T. Lewis. A New Approach to Pollution Control in an Electric Furnace Melt Shop. Iron and Steel Engineer, 45(12):113-120, 1968.

42. Reference 10, p. 144.

43. Letter from Atlantic Steel to AISI, February 17, 1975.

44. Wozniak, E. H. The Phaseout of No. 2 Open Hearth and the Design and Startup of No. 2 Basic Oxygen Furnace Shop. In: Proceedings of the AIME Open Hearth Conference, 1975. pp. 318-346.

45. McCluskey, E. J. Design Engineering of the OG Gas Cleaning System at Inland's No. 2 BOF Shop. Iron and Steel Engineer, 53(12):53-59, 1976.

46. Midwest Research Institute. Particulate Pollutant System Study, Volume III: Handbook of Emission Properties, 1971. p. 137.

47. Anonymous. Design of Local Exhaust Systems. In: Air Pollution Engineering Manual, J. A. Danielson, ed. AP-40, U.S. Environmental Protection Agency, Research Triangle Park, North Carolina, 1973. pp. 34-44.

48. Reference 44, p. 330.

49. Kurzinski, E. F. Desulfurization of Iron--Status and Evaluation. Iron and Steel Engineer, 53(4):59-71, 1976.

50. Kotsch, J. A. The New LD-Steel Shop at Fried.Krupp Huttenwerke AG, Rheinhausen Works. Iron and Steel Engineer, 53(6):33-36, 1976.

51. Tagiri, K. Secondary Ventilation and Dust Collecting System in BOF Steelmaking Shops. Unpublished Report, October 1974. 19 pp.

52. Personal Communication with J. Glenn Murtha, Dravo Corporation, Pittsburgh, Pennsylvania, March 14, 1977.

53. Anonymous. Industrial Ventilation. American Conference of Governmental Industrial Hygienists, Committee of Industrial Ventilation, Lansing, Michigan, 1970.

54. Personal Communication with Howard W. Cole, Jr., and Leonard Brunner, Deter Company, East Hanover, New Jersey, February 22, 1977.

55. Price, W. L. Open Storage Piles and Methods of Dust Control. Paper Presented at the October 1972 Meeting of the American Institute of Mining Engineers, Birmingham, Alabama.

56. Personal Communication with Richard R. Cole, Harry T. Campbell Sons' Company, Baltimore, Maryland, March 11, 1977.

57. Anonymous. Investigation of Fugitive Dust; Volume I: Sources, Emissions, and Control. EPA-450/3-74-036, U.S. Environmental Protection Agency, Research Triangle Park, North Carolina, 1974.

58. Handy, R. L., J. M. Hoover, K. L. Bergeson, and D. E. Fox. Unpaved Roads as Sources for Fugitive Dust. *Transportation Research News*, (60) 6-9, Autumn 1975.

59. Personal Communication with Dave Cook, Roscoe Manufacturing Company, Minneapolis, Minnesota, March 1, 1977.

SECTION 9.0

GLOSSARY

Activity Factor - Measure of the intensity of aggregate material disturbance by mechanical forces in relation to reference activity level defined as unity.

Cloddiness - The mass percentage of an aggregate sample smaller than 0.84 mm in diameter as determined by dry sieving.

Cost, Annualized - The equipment cost divided by the number of years representing the life of the equipment.

Cost, Installed - The total cost of the project including design, equipment purchase, labor and materials for site preparation, construction, equipment installation, and start-up.

Cost, Operating - The cost for labor and utilities necessary to operate the equipment.

Cost-Effectiveness - The cost of control per pound of reduced fine particle emissions.

Dry Day - Day without measurable (0.01 in. or more) precipitation.

Dry Sieving - The sieving of oven-dried aggregate by passing it through a series of screens of descending opening size.

Duration of Storage - The average time that a unit of aggregate material remains in open storage, or the average pile turnover time.

Dust Suppressant - Water or chemical solution which, when applied to an aggregate material, binds suspendable particulate to larger particles.

Emission Control System, Primary - A control system installed to capture and remove most of the total emissions prior to atmospheric discharge.

Emission Control System, Secondary - A control system designed to capture and remove the smaller portion of the total emissions that the primary system does not collect with the smaller portion usually being fugitive in nature.

Enclosure - A structure which either partially or totally surrounds a fugitive emissions source thereby reducing the amount of emissions.

Enclosure of Steelmaking Furnace, Partial - An enclosure of minimal volume that completely surrounds a steelmaking furnace but only extends to the charging floor.

Enclosure of Steelmaking Furnace, Total - A complete enclosure of minimal volume that extends to the tapping floor of a steelmaking furnace.

Exposed Area, Effective - The total exposed area reduced by an amount which reflects the sheltering effect of buildings and other objects that retard the wind.

Exposed Area, Total - Outdoor ground area subject to the action of wind and protected by little or no vegetation.

Exposure - The point value of the flux (mass/area-time) of airborne particulate passing through the atmosphere, integrated over the time of measurement.

Exposure, Filter - Exposure determined from filter catch within primary exposure sampler.

Exposure, Integrated - The result of mathematical integration of partially distributed measurements of airborne particulate exposure downwind of a fugitive emissions source.

Exposure, Total - Exposure calculated from both filter catch and settling chamber catch within primary exposure sampler, or from total catch within secondary exposure sampler.

Exposure Profiling - Direct measurement of the total passage of airborne particulate immediately downwind of the source by means of simultaneous multipoint isokinetic sampling over the effective cross-section of the fugitive emissions plume.

Exposure Sampler, Auxiliary - Directional particulate samples with goose-necked intake and back-up filter, having stepwise flows control (0.5 to 1 cfm) to provide for isokinetic sampling at wind speeds of 5 to 10 mph.

Exposure Sampler, Primary - Directional particulate sampler with settling chamber and backup filter, having variable flow control (5 to 20 cfm) to provide for isokinetic sampling at wind speeds of 4 to 15 mph.

Fugitive Emissions, Total - All particles from either open dust or process fugitive sources as measured immediately adjacent to the source.

Fugitive Emissions - Emissions not originating from a stack, duct, or flue.

Load-in - The addition of material to a storage pile.

Load-out - The removal of material from a storage pile.

Materials Handling - The receiving and transport of raw, intermediate and waste materials, including barge/railcar unloading, conveyor transport and associated conveyor transfer and screening stations.

Moisture Content - The mass portion of an aggregate sample consisting of unbound moisture on the surface of the aggregate, as determined from weight loss in oven drying with correction for the estimated difference from total unbound moisture.

Partial Diameter, Aerodynamic - The diameter of a hypothetical sphere of unit density (1 g/cm^3) having the same terminal settling velocity as the particle in question, regardless of its geometric size, shape and true density.

Particle Diameter, Stokes - The diameter of a hypothetical sphere having the same density and terminal settling velocity as the particle in question, regardless of its geometric size and shape.

Particle Drift Distance - Horizontal distance from point of particle injection into the atmosphere to point of removal by contact with the ground surface.

Particulate, Fine - Airborne particulate smaller than 5 μm in Stokes diameter.

Particulate, Suspended - Airborne particulate smaller in Stokes diameter than 30 micrometers, the approximate cut-off diameter for the capture of particulate matter by a standard high-volume sampler, based on a particle density of 2 to 2.5 g/cm^3.

Precipitation-Evaporation Index - A climatic factor equal to ten times the sum of 12 consecutive monthly ratios of precipitation in inches over evaporation in inches, which is used as a measure of the annual average moisture of a flat surface area.

Road, Paved - A roadway constructed of rigid surface materials, such as asphalt, cement, concrete and brick.

Road, Unpaved - A roadway constructed of non-rigid surface materials such as dirt, gravel (crushed stone or slag), and oil and chip surfaces.

Road Surface Dust Loading - The mass of loose surface dust on a paved roadway, per length of roadway, as determined by dry vacuuming.

Road Surface Material - Loose material present on the surface of an unpaved road.

Source, Open Dust - Any source from which emissions are generated by the forces of wind and machinery acting on exposed aggregate materials.

Source, Process Fugitive Emissions - An unducted source of emissions involving a process step which alters the chemical or physical characteristics of a material, frequently occurring within a building.

Silt Content - The mass portion of an aggregate sample smaller than 75 micrometers in diameter as determined by dry sieving.

Spray System - A device for applying a liquid dust suppressant in the form of droplets to an aggregate material for the purposes of controlling the generation of dust.

Storage Pile Activities - Processes associated with aggregate storage piles, specifically, load-in, vehicular traffic around storage piles, wind erosion from storage piles, and load-out.

Surface Erodibility - Potential for wind erosion losses from an unsheltered area, based on the percentage of erodible particles (smaller than 0.84 mm in diameter) in the surface material.

Surface Stabilization - The formation of a resistive crust on an exposed aggregate surface through the action of a dust suppressant, which suppresses the release of otherwise suspendable particles.

Vehicle, Heavy Duty - A motor vehicle whose gross vehicle traveling weight exceeds 30 tons.

Vehicle, Light Duty - A motor vehicle whose gross vehicle traveling weight is less than or equal to 3 tons.

Vehicle, Medium Duty - A motor vehicle whose gross vehicle traveling weight is greater than 3 tons, but less than 30 tons.

Windbreak - A natural or man-made object which reduces the ambient wind speed in the immediate locality.

SECTION 10.0

ENGLISH TO METRIC UNIT CONVERSION TABLE

English unit	Multiplied by	Metric unit
lb/T	0.500	kg/t
lb/vehicle mile	0.282	kg/vehicle km
lb/acre yr	112	kg/km^2 yr
lb	0.454	kg
T	0.907	t
mph	0.447	m/s
mile	1.61	km
ft	0.305	m
acre	0.00405	km^2

APPENDIX A

FIELD TESTING METHODOLOGY

1.0 Introduction

Field testing of fugitive emissions from open sources at two integrated iron and steel plants was conducted by MRI during separate 2-week periods in April and June of 1977. This appendix describes the field testing methodology that was used.

Testing at the first plant (designated as Plant A) took place from April 11 to 22, 1977. Sources tested at Plant A included:

Fugitive dust source	Number of tests
Load out of high silt processed slag into truck	3
Load out of low silt product slag into truck	3
Mobile stacking of pelletized iron ore	3
Mobile stacking of lump iron ore	3
Light-duty vehicular traffic on unpaved road	1
Heavy-duty vehicular traffic on unpaved road	2

A total of 15 tests were performed.

Testing at the second plant (designated as Plant E) took place from June 13 to 22, 1977. Sources tested at Plant E included:

Fugitive dust source	Number of tests
Heavy-duty vehicular traffic on unpaved road	3
Light-duty vehicular traffie on unpaved road	3
Plant vehicle mix on paved road	3
Conveyor transfer station (sinter)	3

A total of 12 tests were performed.

MRI's Exposure Profiling technique was used to quantify dust emissions by multi-point sampling immediately downwind of the emitting source, utilizing the isokinetic profiling concept which is the basis for conventional source testing. To the extent possible, measurements were restricted to periods with moderate winds (5 to 15 mph) of constant mean direction, 3 or more days after significant rainfall (accumulation exceeding 0.5 in.).

Table A-1 specifies the kinds and frequencies of field measurements that were conducted during each run. "Composite" samples denote a set of single samples taken from several locations in the area; "integrated" samples are those taken at one location for the duration of the run.

2.0 Sampling Equipment

The primary tool for quantification of emission rate was the MRI exposure profiler, which was developed under EPA Contract No. 68-02-0619. The profiler (modified for this study) consists of a portable tower (4 to 6 m height) with an optional horizontal crossarm (extending to about 5 m in length) supporting an array of sampling heads. Each sampling head was operated as a directional exposure sampler (with automatic separation of settleable dust). Sampling intakes were pointed into the wind, and sampling velocity was adjusted to match the local mean wind speed, as monitored by distributed anemometers.

A vertical line grid of samplers (Figure A-1) was used for measurement of emissions from paved and unpaved roads, while a two-dimensional array of samplers was used for quantification of emissions from storage pile transfer operations. The primary sampler design (Figure A-1) entailed passage of the flow stream through a settling chamber, trapping particles larger than about 50 μm in diameter, and then upward through a standard 8 in. by 10 in. glass fiber filter positioned horizontally. Smaller auxiliary samplers of lighter weight (Figure A-2) were used at perimeter crossarm positions in sampling storage pile emissions. Assuming that exposure from a point source is normally distributed (as shown in Figure A-3), the exposure values measured by the samplers at the edge of the grid should be about 25% of the centerline exposure, so that about 90% of the total mass flux (exposure) lies within the grid boundaries.

Sampling time was sufficient to provide sufficient particulate mass and to average over several units of cyclic fluctuation in the emission rate (for example, vehicle passes on an unpaved road). The first condition was easily met because of the proximity of the sampling grid to the source.

TABLE A-1. FIELD MEASUREMENTS

Test Parameter	Units	Sampling Mode	Measurement Method
1. Meteorology			
a. Wind speed	mph	Continuous	Recording instrument at "background" station, sensors at reference height
b Wind direction	deg	Continuous	
c. Cloud cover	%	Single	Visual observation
d. Temperature	°F	Single	Sling psychrometer
e Relative humidity	%	Single	Sling phychrometer
2. Storage Piles			
a. Material type	--	Composite	Determined by plant personnel
b. Moisture content	% moisture	Single	Oven drying
c. Dust texture	% silt	Composite	Dry sieving
d. Material throughput	tons	--	Determined by plant personnel
3. Road Surfaces			
a. Pavement type	--	Composite	Observation (photographs)
b. Surface condition	--	Composite	Observation
c Dust loading	g/m^2	Multiple	Dry vacuuming
d. Dust texture	% silt	Multiple	Dry sieving
4. Vehicular Traffic			
a. Mix	--	Multiple	Observation (car, truck, number of axles, etc)
b. Count	--	Cumulative	Automatic counters
5. Suspended Dust			
a. Exposure (versus height)	mg/cm^2	Integrated	Isokinetic high-volume filtration (MRI method)
b. Mass size distribution	um	Integrated	High-volume cascade impaction
c. Downwind concentration	$\mu g/m^3$	Integrated	High-volume filtration (EPA method)
d. Background concentration	$\mu g/m^3$	Integrated	High-volume filtration (EPA method)
e. Duration of sampling	min	Cumulative	Timing
6. Deposition			
a. Surface (versus distance from curb)	$g/m^2/veh$	Integrated	Dustfall buckets (ASTM method)
b. Elevated	$g/m^2/veh$	Integrated	Dustfall buckets (ASTM method)

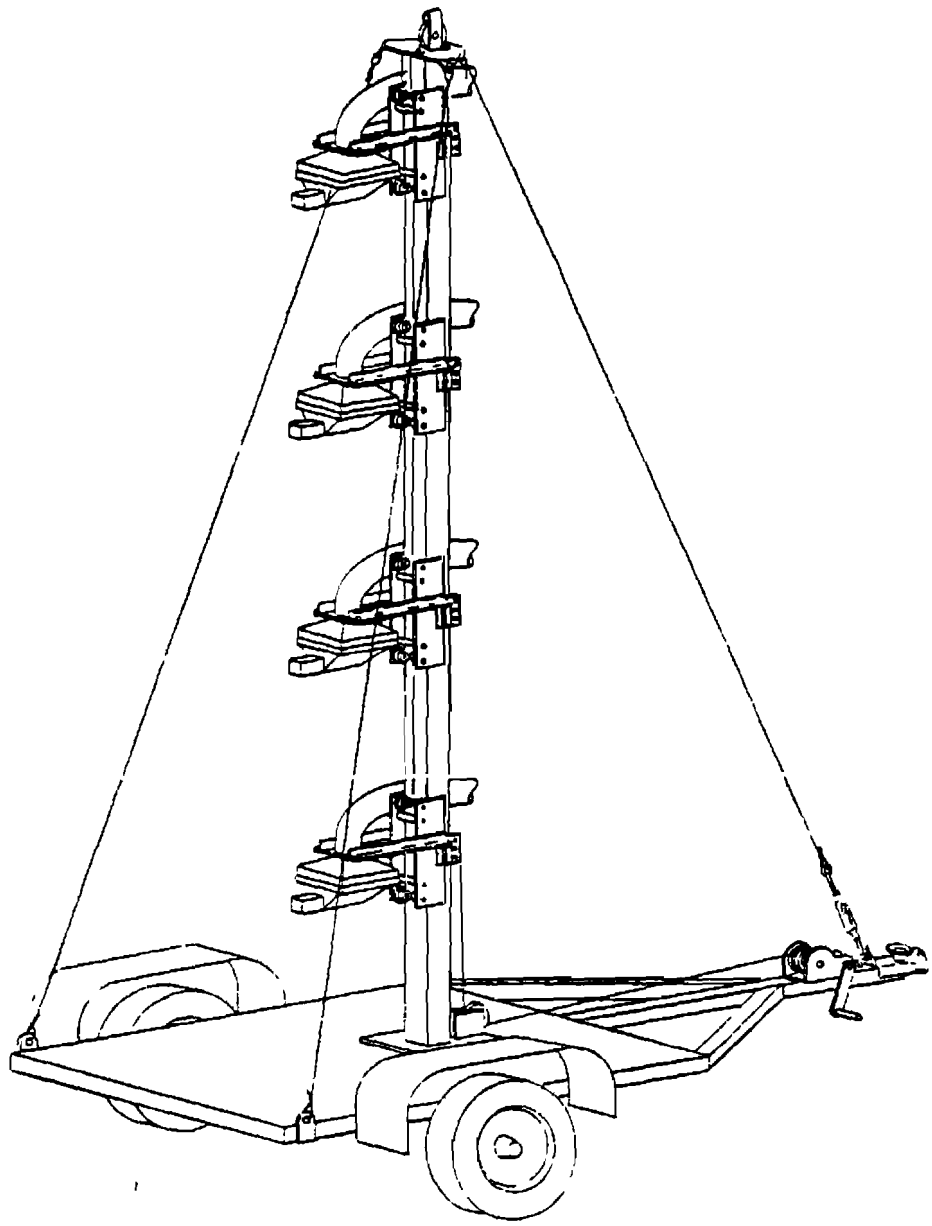

Figure A-1. MRI exposure profiler for line or moving point sources.

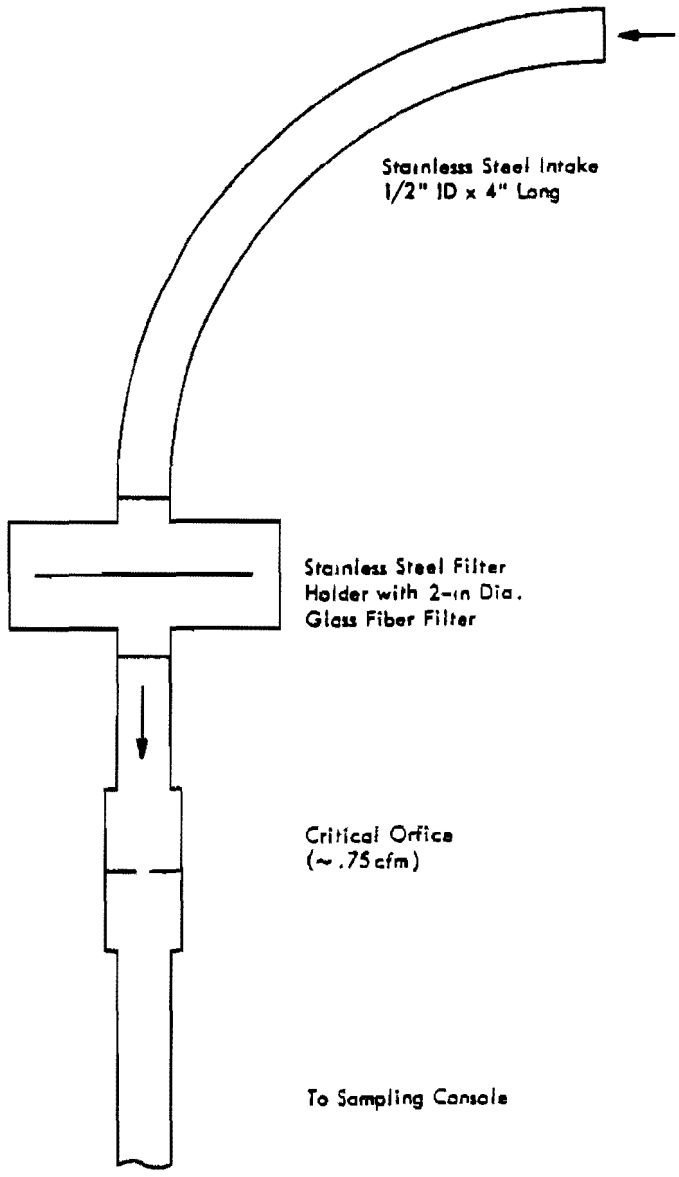

Figure A-2. Auxiliary air sampler.

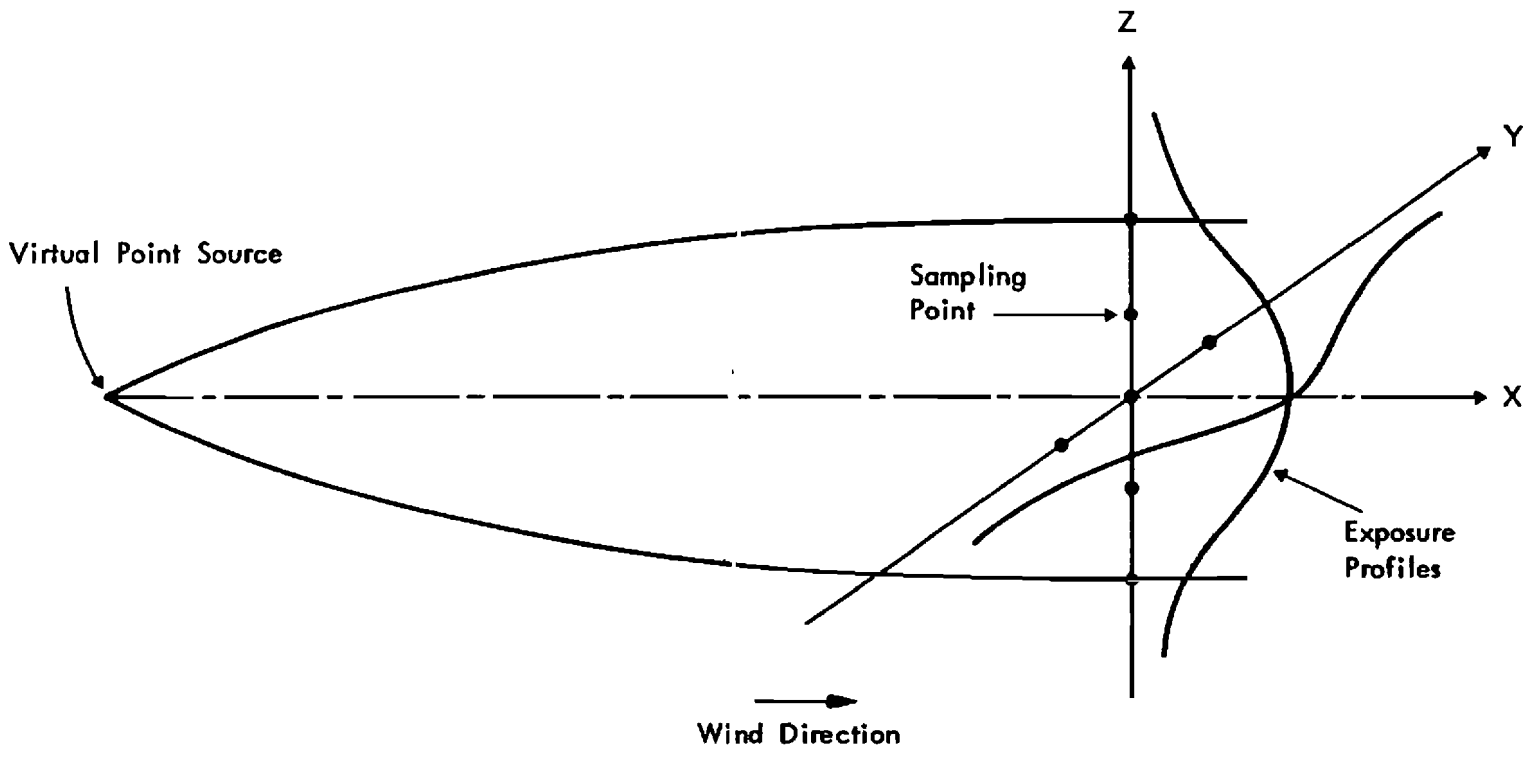

Figure A-3. Example exposure profiling arrangement.

In addition to airborne dust passage (exposure), fugitive dust parameters that were measured included suspended dust concentration and particle size distribution. Conventional high-volume filtration units were operated upwind and downwind of the test source.

A Sierra Instruments high-volume parallel-slot cascade impactor with a 20 cfm flow controller was used to measure particle size distribution along side of the exposure profiler. The impactor unit was equipped with a Sierra cyclone preseparator to remove coarse particles which otherwise would tend to bounce off of the glass fiber impaction substrates, causing fine particle measurement bias. The cyclone sampling intake was directed into the wind, resulting in isokinetic sampling for a wind speed of 10 mph.

As indicated in Table A-1, other types of parameters that were measured during each test included (a) prevailing meteorology, (b) properties of the emitting material, and (c) source extent and activity parameters.

Figures A-4 to A-9 show the locations of the sampling instruments relative to the emitting fugitive dust sources.

3.0 Sample Handling and Analysis

At the end of each run, the collected samples of dust emissions were carefully transferred to protective containers within the MRI instrument van, to prevent dust losses. High-volume filters (from the MRI exposure profiler and from standard high-volume units) and impaction substrates were folded and placed in individual envelopes. Dust that collected on the interior surfaces of each exposure probe was rinsed with distilled water into separate glass jars. Dust was transferred from the cyclone precollector in a similar manner.

Dust samples from the field tests were returned to MRI and analyzed gravimetrically in the laboratory. Glass fiber filters and impaction substrates were conditioned at constant temperature and relative humidity for 24 hr prior to weighing (the same conditioning procedure used before taring). Water washes from the exposure profiler intakes, cyclone precollector and dustfall buckets were filtered, after which the tared filters were dried, conditioned at constant humidity, and reweighed.

Samples of road dust and storage pile materials were dried to determine moisture content and screened to determine the weight fraction passing a 200-mesh screen, which gives the silt content. A conventional shaker was used for this purpose. That portion of the material passing through the 200-mesh screen was analyzed to determine density of potentially suspendable particles.

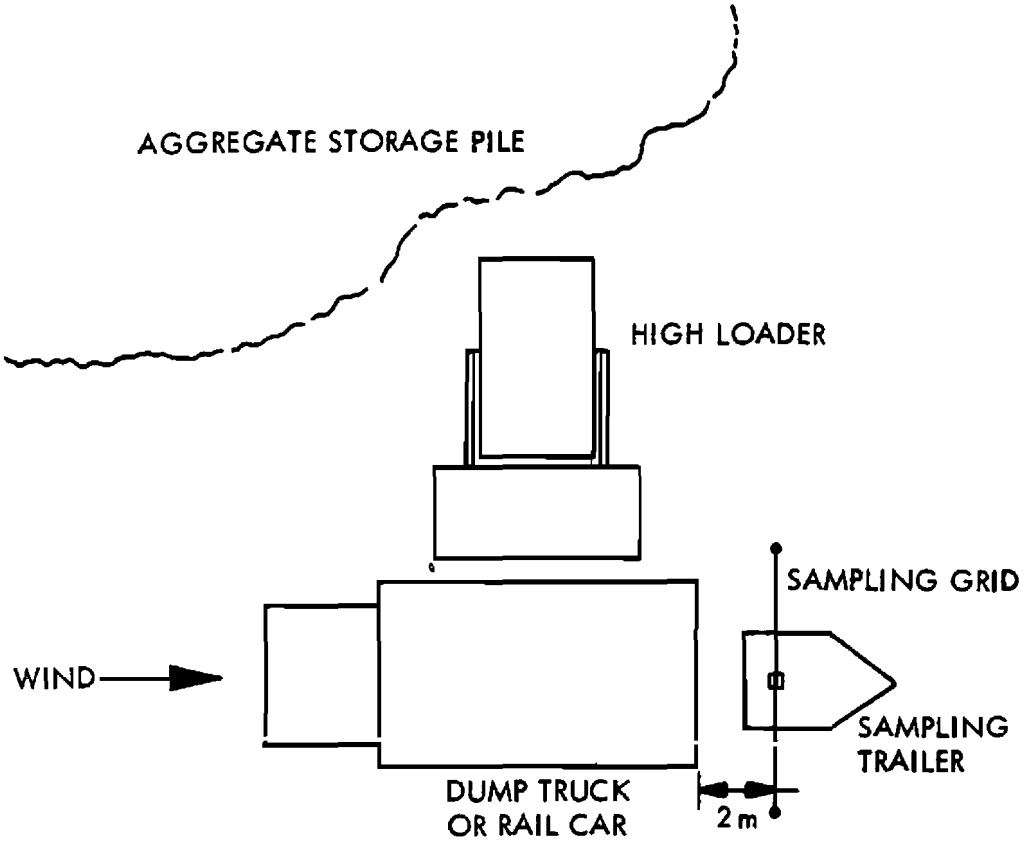

Figure A-4. Positioning of air sampling equipment (top view)--processed slag load-out.

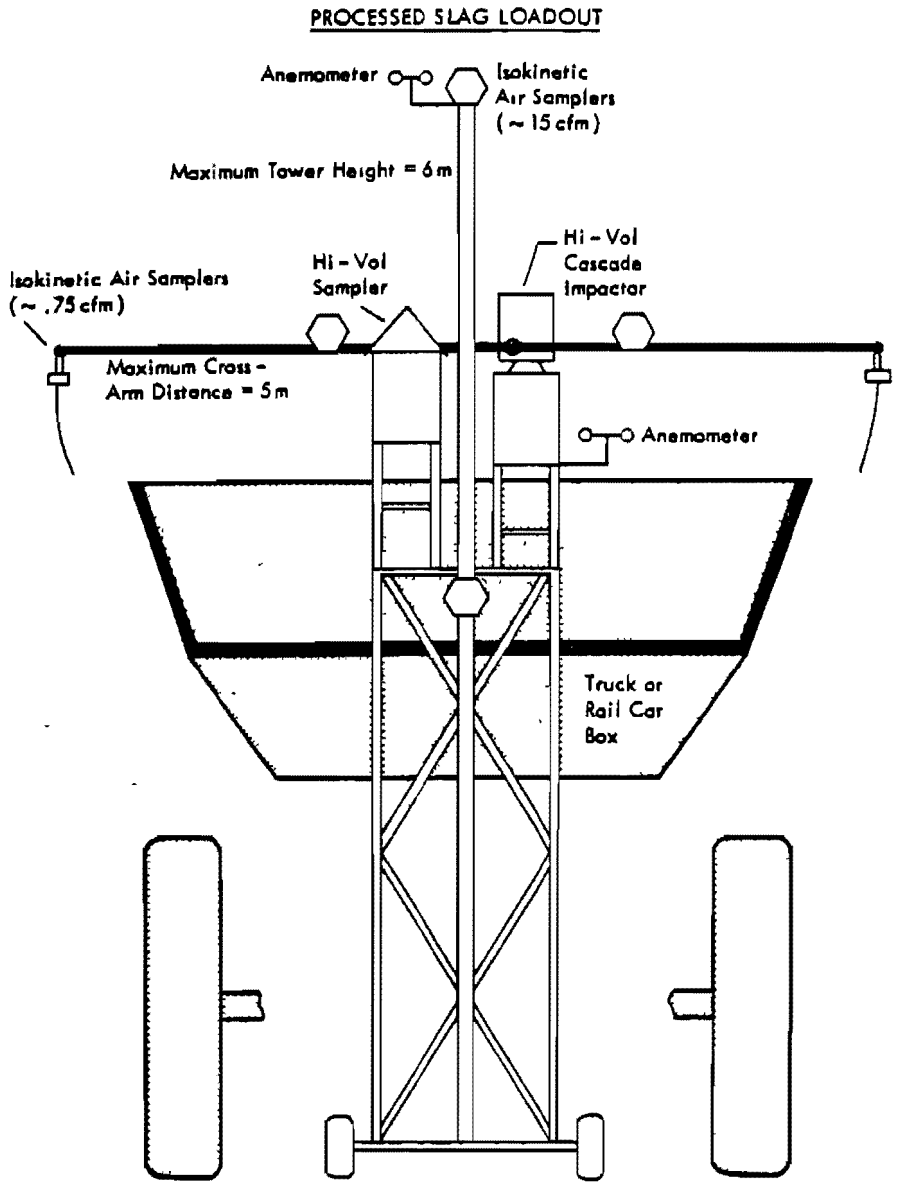

Figure A-5. Positioning of air sampling equipment (rear view)--processed slag load-out.

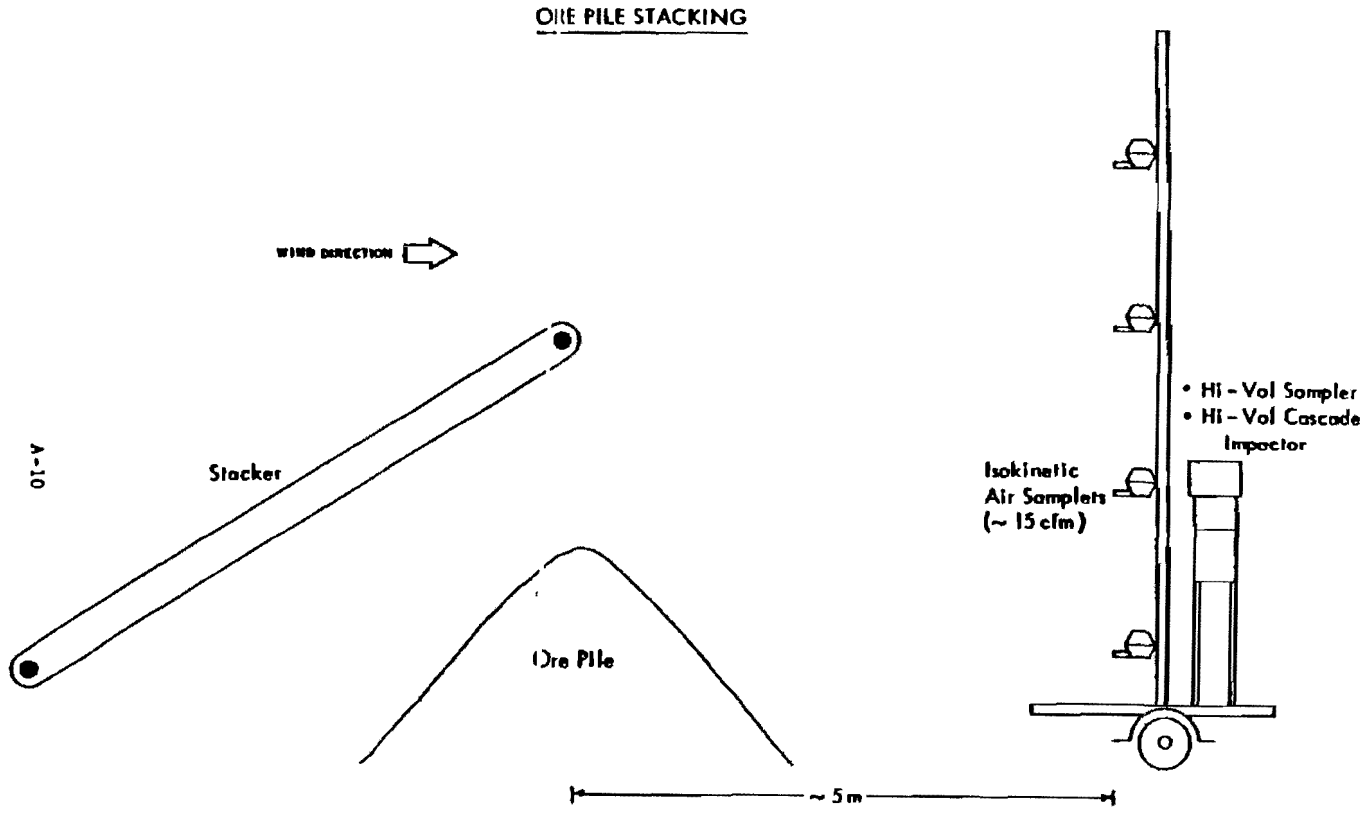

Figure A-6. Positioning of air sampling equipment--ore pile stacking.

A-10

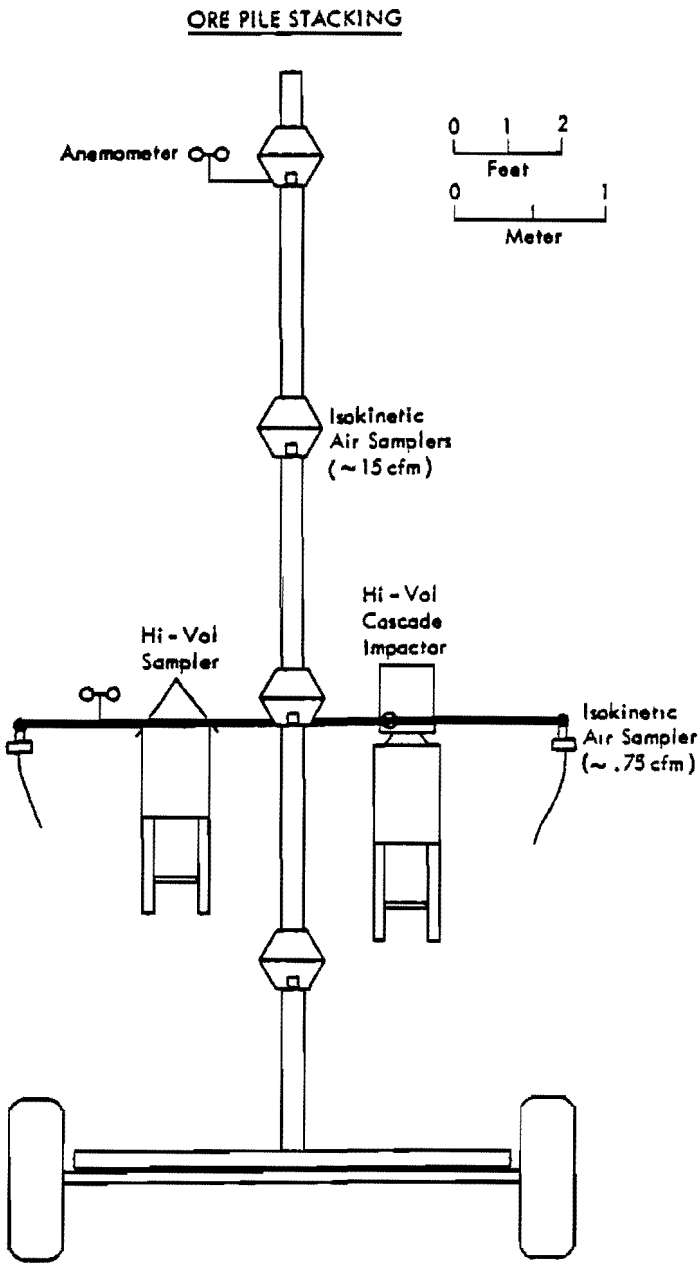

Figure A-7. Modified MRI exposure profiler--ore pile stacking.

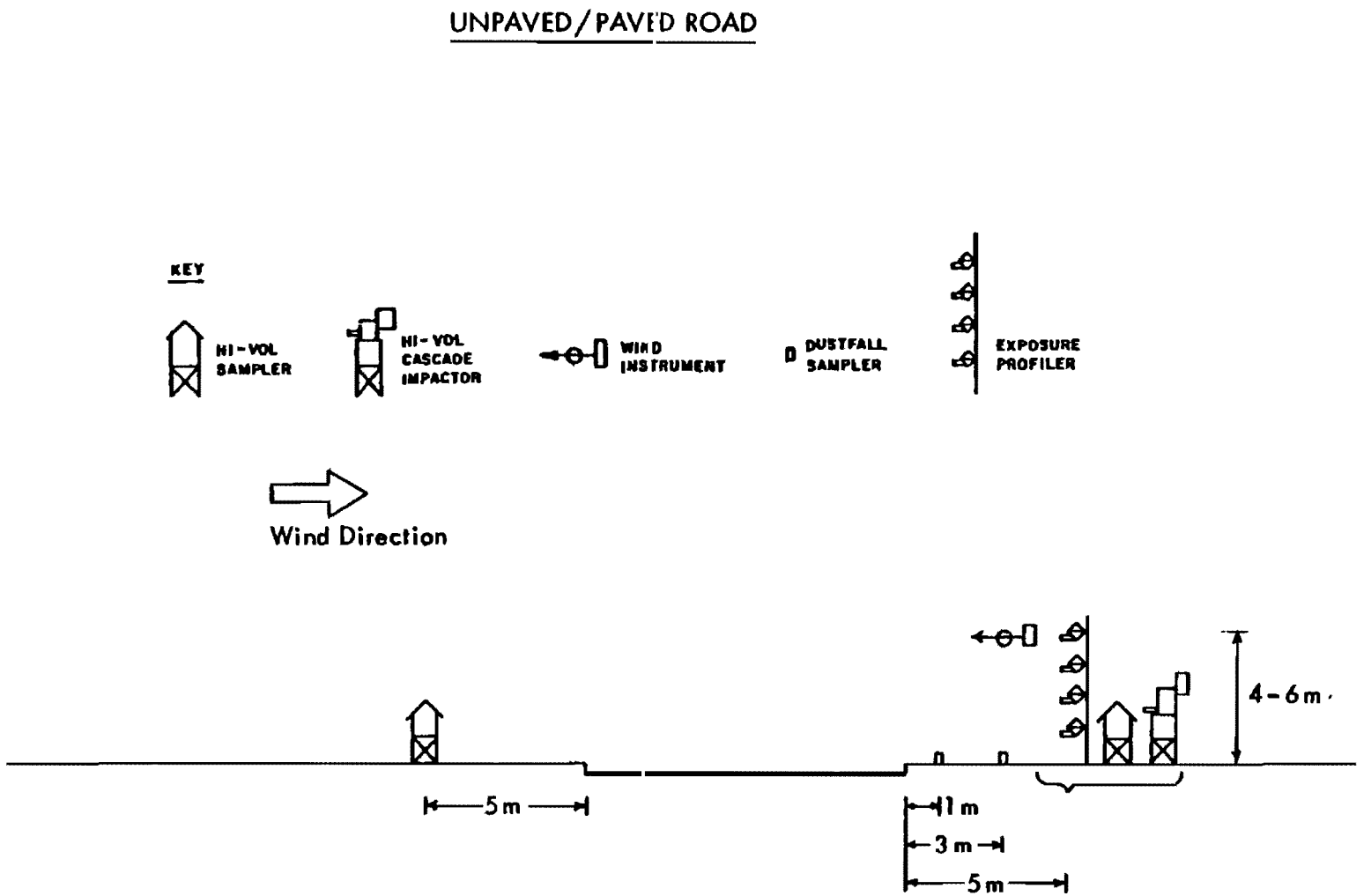

Figure A-8. Positioning of air sampling equipment--unpaved/paved road.

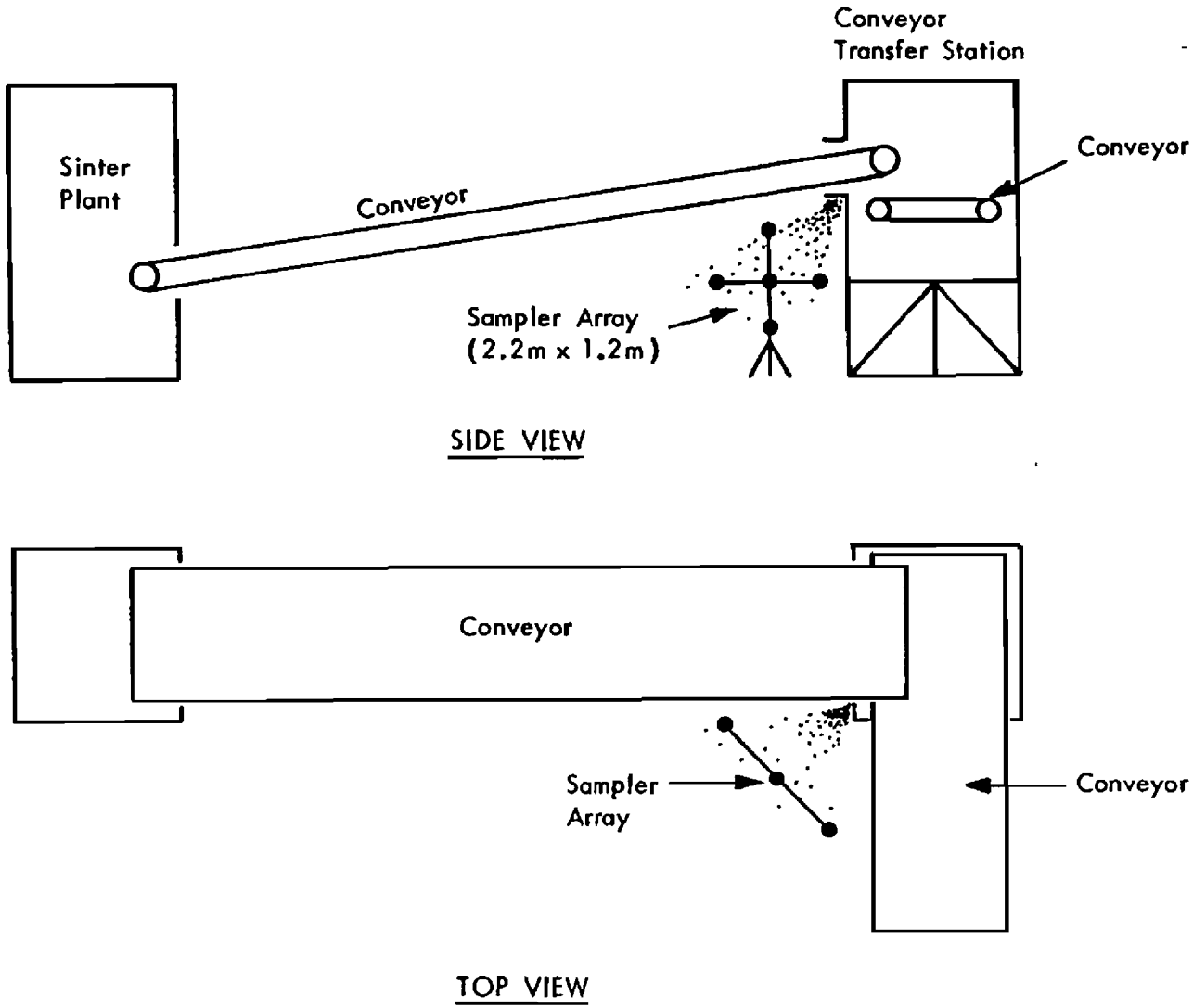

Figure A-9. Sinter plant conveyor transfer station.

4.0 Calculation Procedure

4.1 Emission Rate

The passage of airborne particulate, i.e., the quantity of emissions per unit of source activity, is obtained by spatial integration (over the effective cross-section of the plume) of distributed measurements of exposure (mass/area). The exposure is the point value of the flux (mass/area-time) of airborne particulate integrated over the time of measurement.

Mathematically stated, the total mass emission rate (R) is given by:

$$R = \frac{1}{t} \iint_A \frac{m(h,w)}{a} \, dh dw$$

where m = dust catch by exposure sampler after subtraction of background

a = intake area of sampler

t = sampling time

h = vertical distance coordinate

w = lateral distance coordinate

A = effective cross-sectional area of plume

In the case of a line source with an emission height near ground level, the mass emission rate per source length unit being sampled is given by:

$$R = \frac{W}{t} \int_0^H \frac{m(h)}{a} \, dh$$

where W = width of the sampling intake

H = effective extent of the plume above ground

In order to obtain an accurate measurement of airborne particulate exposure, sampling must be conducted isokinetically, i.e., flow

streamlines enter the sampler rectilinearly. This means that the sampling intake must be aimed directly into the wind and, to the extent possible, the sampling velocity must equal the local wind speed. The first condition is by far the more critical.

4.2 Isokinetic Corrections

If it is necessary to sample at a nonisokinetic flow rate (for example, to obtain sufficient sample under light wind conditions), the following multiplicative factors should be used to correct measured exposures and concentrations to corresponding isokinetic values:

	Fine Particles ($d < 5\ \mu m$)	Coarse Particles ($d > 50\ \mu m$)
Exposure Multiplier	U/u	1
Concentration Multiplier	1	u/U

where u = sampling intake velocity at a given elevation
U = wind velocity at same elevation as u
d = aerodynamic (equivalent sphere) particle diameter

For a particle-size distribution containing a mixture of fine, intermediate, and coarse particles, the isokinetic correction factor is an average of the above factors, weighted by the relative proportion of coarse and fine particles. For example, if the mass of fine particles in the distribution equals twice the mass of the coarse particles, the weighted isokinetic correction for exposure would be

$$1/3\ [2(U/u) + 1]$$

4.3 Particle Size Distribution

As stated above, a cyclone preseparator was used in conjunction with a high-volume cascade impactor to measure airborne particle size distribution. The purpose of the preseparator was to remove coarse particles which otherwise would tend to bounce through the impactor to the back-up filter, thereby causing fine particle measurement bias.

Although the cyclone precollector was designed by the manufacturer to have a 50% cutoff diameter of 7.6 μm (particle density of 2.5 g/cm^3), laboratory calibration of the cyclone, reported in May 1976, indicated the effective cutoff diameter to be 3.5 μm. Because this value overlapped the cutoff diameter of the first impaction stage (6.4 μm), it was decided to

add the first stage catch to the cyclone catch, in calculating the particle size distribution.

As indicated by the simultaneous measurement of airborne particle-size distribution, one impactor being used with a precollector and a second without a precollector, the cyclone precollector is very effective in reducing fine particle measurement bias. However, the following observations indicate that additional correction for coarse particle bounce is needed:

1. There is a monotonic decrease in collected particulate weight on each successive impaction state, followed by a several-fold increase in weight collected by the back-up filter.

2. Because the assumed value (0.2 μm) for the effective cutoff diameter of the glass fiber back-up filter fits the progression of cutoff diameters for the impaction stages, the weight collected on the back-up filter should follow the particulate weight progression on the impactor stages.

The excess particulate on the back-up filter is postulated to consist of coarse particles that penetrated the cyclone (with small probability) and bounced through the impactor.

To correct the measured particle size distribution for the effects of residual particle bounce, the following procedure was used:

1. The calibrated cutoff diameter for the cyclone preseparator was used to fix the upper end of the particle-size distribution.

2. At the lower end of the particle-size distribution, the particulate weight on the back-up filter was reduced to fit the particulate weight distribution of the impactor stages, thereby extending the monotonic decrease in particulate weight observed on the impactor stages).

APPENDIX B

TESTING RESULTS AND EXAMPLE CALCULATIONS

1.0 Introduction

This appendix provides a detailed presentation of the test results and corresponding calculation procedures for each of five categories of fugitive emissions sources that were tested. The source categories tested were:

* Load-out of processed slag into 35-ton capacity dump trucks with a 10 cu yd front end loader.

* Formation of storage piles of pelletized and lump iron ore with a mobile conveyor stacker.

* Vehicular traffic on unpaved roads surfaced with slag and dirt.

* Vehicular traffic on paved roads.

* Conveyor transfer station--sinter material.

Test results are presented below for each of these source categories.

2.0 Slag Load-Out

Table B-1 gives information on the time of each slag load-out run and the prevailing meteorological conditions at the site. Also given for each run is the quantity of material loaded with the 10 cu yd front end loader into the 35-ton capacity truck.

Table B-2 lists the individual point values of exposure (net mass per sampling intake area) within the fugitive dust plume as measured by the exposure profiling equipment. Also given for each high-volume sampling head is the exposure measurement consisting of particulate collected by the filter following the settling chamber.

TABLE B-1. EMISSIONS TEST PARAMETERS--MATERIAL LOAD-OUT

Slag type	Run	Date	Start time	Exposure sampling duration (min)	Ambient temperature (°F)	Wind direction/ speed (mph)	Cloud cover (%)	Material loaded (tons)
4120	A1	4/13/77	1400	30	-	S/8	30	140
	A2	4/15/77	1015	40	-	NW/5	40	140
	A3	4/15/77	1300	30	58	NW/9	0	140
4133	A4	4/15/77	1520	30	62	NW/6	0	175
	A5	4/16/77	0910	40	55	NW/3	0	140
	A6	4/16/77	1130	40	61	W/7	0	175

TABLE B-2. PLUME SAMPLING DATA--MATERIAL LOAD-OUT

Run	Sampling height (m)	Distance from centerline (m)	Sampling rate (cfm)	Total exposure (mg/cm^2)	Filter exposure (mg/cm^2)
A1	3	-	24	274	51.0
	4.5	2.1 right	0 7	41.2	
	4.5	0.7 right	24	99.1	22.7
	4.5	0.7 left	24	182	40.4
	4.5	2.1 left	0 7	76.0	
	6	-	24	74.1	23.8
A2	2.5	-	16	88.8	14.9
	4.37	2.4 right	0 7	16.4	
	4.37	0.7 right	19	77.8	14.7
	4.37	0.7 left	14	80.9	25.5
	4.37	2.4 left	0 7	12.5	
	6.25	-	17	34.0	12.3
A3	2.5	-	31	454	52.2
	4.37	2.4 right	0 7	51.6	
	4.37	0.7 right	33	169	29.5
	4.37	0.7 left	32	285	47.6
	4.37	2.4 left	0.7	104.7	
	6.25	-	33	134	27.2
A4	2.5	-	14	63.4	8.0
	4.37	2.4 right	0 7	23.9	
	4.37	0.7 right	16	31.4	4.4
	4.37	0.7 left	12	35.9	5.1
	4.37	2.4 left	0 7	24.2	
	6.25	-	14	10.8	3.1
A5	2.5	-	16	20.5	3.7
	4.37	2.4 right	16	9.1	
	4.37	0.7 right	16	13.0	1.9
	4.37	0.7 left	12	12.0	2.9
	4.37	2.4 left		7.3	
A6	2.5	-	18	61.2	9.0
	4.37	2.4 right		14.9	
	4.37	0.7 right	20	21.7	5.5
	4.37	0.7 left	17	41.0	11.0
	4.37	2.4 left		32.7	
	6.25	-	17	5.9	3.0

Table B-3 gives for each run the integrated exposure value corrected to isokinetic conditions and compares particulate concentrations measured by the upwind hi-vol and by three types of downwind samplers (exposure profiling head, standard hi-vol, and high-volume cascade impactor) located in close proximity, near the center of the plume. Concentrations measured by the downwind hi-vol are significantly lower than values measured by the other two units because of the low capture efficiency of the hi-vol for particles larger than about 30 μm in diameter.

Table B-4 summarizes the particle sizing data for the six slag load-out tests. Particle size is expressed as Stokes (equivalent-sphere) diameter based on actual density of silt-size particles. In addition to data from the cascade impactor measurements, Table B-4 also gives for each run the average percent of the exposure measurement consisting of filter catch weighted by the exposure value measured by each sampling head.

Table B-5 presents the emission factors corrected to represent particles smaller than 30 μm in diameter. Also indicated in Table B-5 are material properties and wind conditions which constitute correction factors to the emission factors.

The last column is the coefficient (k) in the proposed emission factor expression:

$$EF = k \frac{sU}{M^2}$$

where EF = emission factor (lb/ton)
s = silt content of aggregate (%)
U = mean wind speed (mph)
M = moisture content of aggregate (%)

The value k represents a measure of the activity or energy expended during the load-out process.

Table B-6 presents an example emission factor calculation. The calculation is based on data for Run A1.

TABLE B-3. SUSPENDED PARTICULATE CONCENTRATION AND EXPOSURE MEASUREMENTS--MATERIAL LOAD-OUT

Slag type	Run	Particulate concentration (mg/m^3) at 4.5 m above ground[a/]				Isokinetic ratio for profiler u/U[b/]	Integrated filter exposure[c/] (lb/ton)
			Downwind, including background				
		Background	Profiler[c/]	Standard hi-vol	Cascade impactor		
4120	A1	0.5	219	83	205	1.2	0.15
	A2	3.2	167	38	117	1.3	0.062
	A3	3.2	318	143	294	1.5	0.16
4133	A4	3.2	75	45	71	0.96	0.032
	A5	2.6	48	8	20	2.0	0.013
	A6	2.6	44	33	47	1.1	0.017

a/ Background at 2 m; others at 4.4 to 4.5 m.

b/ u = sampling velocity; U = wind speed.

c/ Isokinetic.

TABLE B-4. PARTICLE SIZING DATA SUMMARY--MATERIAL LOAD-OUT
(Density = 3 g/cm^3)

		Cascade Impactor				Profiler
Slag type	Run	Mass median diameter (μm)	Percent < 30 μm	Percent < 5 μm	Ratio[a/]	Weighted average % captured on the filter
4120	A1	> 100	8	2.5	0.31	22
	A2	> 100	10	3	0.30	22
	A3	> 100	5.5	1.5	0.27	15
4133	A4	> 100	13	4	0.31	14
	A5	> 100	14	4	0.29	17
	A6	> 100	13	3.5	0.27	20

a/ Percent < 5 μm ÷ percent < 30 μm.

TABLE B-5. CORRECTED EMISSION FACTOR SUMMARY--MATERIAL LOAD-OUT

Slag type	Run	Emission factor (E)[a/] (lb/ton)	Material transferred (tons)	Surface material: Density (g/cm^3)	Surface material: Silt (s) (%)	Surface material: Moisture (M) (%)	Wind Speed (U) (mph)	$\frac{EM^2}{sU}$
4120	A1	0.056	140	3	7.3	0.25	3.6	0.00013
	A2	0.028	140				2.2	0.00011
	A3	0.059	140				4.2	0.00012
4133	A4	0.030	175	3	3.0	0.30	2.7	0.00033
	A5	0.011	140				1.3	0.00025
	A6	0.011	175				3.1	0.00011

a/ Represents particles smaller than 30 μm in diameter.

TABLE B-6. EXAMPLE CALCULATION FOR RUN A1--SLAG LOAD-OUT

	Result
A. Plot filter exposure versus sampler location.	--
B. Graphically integrate to determine the area under the exposure surface.	20.4 lb
C. Divide B by the quantity of material loaded to arrive at the integrated filter exposure.	0.15 lb/ton
D. Multiply C by the ratio of the percent <30 μm (8%) over the weighted average percent suspended (22%) to obtain the emission factor for particles smaller than 30 μm.	0.056 lb/ton
E. Correct D to isokinetic conditions following the procedure given in Appendix A. (All coarse particles; therefore correction factor = 1.)	0.056 lb/ton

3.0 Ore Pile Stacking

Table B-7 gives information on the time of each ore pile stacking run and the prevailing meteorological conditions at the site. Also given for each run is the quantity of material loaded onto the 400-ft long pile by means of the mobile conveyor stacker.

Table B-8 lists the individual point values of exposure (net mass per sampling intake area) within the fugitive dust plume as measured by the exposure profiling equipment. Also given for each high-volume sampling head is the exposure measurement consisting of particulate collected by the filter following the settling chamber.

Table B-9 gives for each run the integrated exposure value corrected to isokinetic conditions and compares particulate concentrations measured by the upwind hi-vol and by two types of downwind samplers (exposure profiling head and high-volume cascade impactor) located in close proximity, near the center of the plume.

Table B-10 summarizes the particle sizing data for the six ore pile stacking tests. Particle size is expressed as Stokes (equivalent-sphere) diameter based on actual density of silt-size particles. In addition to data from the cascade impactor measurements, Table B-10 also gives for each run the average percent of the exposed measurement consisting of filter catch weighted by the exposure value measured by each sampling head.

Table B-11 presents the emission factors corrected to represent particles smaller than 30 μm in diameter. Also indicated in Table B-11 are material properties and wind conditions which constitute correction factors to the emission factors.

The last column is the coefficient (k) in the proposed emission factor expression:

$$EF = k \frac{sU}{M^2}$$

where E = emission factor (lb/ton)
s = silt content of aggregate (%)
U = mean wind speed (mph)
M = moisture content of aggregate (%)

The value k represents a measure of the activity or energy expended during the load-out process.

TABLE B-7. EMISSIONS TEST'S PARAMETERS--ORE PILE STACKING

Pile material	Run	Date	Start time	Exposure sampling duration (min)	Source orientation	Ambient temperature (°F)	Wind direction/ speed (mph)	Cloud cover (%)	Material piled (tons)
Pellets	A8	4/20/77	1125	30	E-W	-	NNW/5	0	500
	A9	4/20/77	1330	15	E-W	-	NNW/13	0	250
	A10	4/20/77	1505	13	E-W	60	NNW/10	0	216
Open hearth ore	A11	4/21/77	1137	22	E-W	69	SSE/4	0	293
Desert mount ore	A12	4/21/77	1340	25	E-W	-	S/4	30	333
	A13	4/21/77	1527	28	E-W	-	S/5	0	373

TABLE B-8. PLUME SAMPLING DATA--ORE PILE STACKING

Run	Sampling height (m)	Distance from centerline (m)	Sampling rate (cfm)	Total exposure (mg/cm^2)	Filter exposure (mg/cm^2)
A8	1		12	113	25.5
	2	1.4 right	0.7	18.1	
	2		13	21.7	5.8
	2	1.4 left	0.7	12.6	
	3		12	11	2.4
	4		16	3	0.8
A9	1		20	51	19.7
	2		22	48	14.6
	3	1.4 left	0.7	45.0	
	3		22	62	16.7
	3	1.4 right	0.7	46.8	
	4		23	26	6.2
A10	1		21	70	20.6
	2		22	61	12.6
	3	1.4 right	0.7	31.0	
	3		22	58	15.7
	3	1.4 left	0.7	30.3	
	4		25	8	8.5
A11	1		15	38.5	5.4
	2	1.4 left	0.7	15.1	
	2		16	14.7	2.1
	2	1.4 right	0.7	9.9	
	3		14	11.5	1.3
	4		19	4.0	0.8
A12	1		12	10.5	0.9
	2	1.4 right	0.7	8.0	
	2		14	5.50	0.6
	2	1.4 left	0.7	1.7	
	3		12	3.72	0.4
	4		17	1.78	0.4
A13	1		12	1.39	0.3
	2		14	1.65	0.5
	3	1.4 left	0.7	2.09	
	3		11	2.05	0.5
	3	1.4 right	0.7	3.62	
	4		16	1.59	0.3

TABLE B-9. SUSPENDED PARTICULATE CONCENTRATION AND EXPOSURE MEASUREMENTS--ORE PILE STACKING

Pile material	Run	Particulate concentration (mg/m^3) at 2 m above ground: Background	Downwind, including background: Profiler[a]	Downwind, including background: Cascade impactor[a]	Isokinetic ratio for profiler u/U	Integrated filter exposure[b] (lb/ton)
Pellets	A8	2.6	58	44	1.1	0.0041
	A9	2.6	93	-	0.7	0.024
	A10	2.6	180	227	0.9	0.038
Open hearth ore	A11	1.6	65	33	1.6	0.0038
Desert mound ore	A12	1.6	23	16	1.4	0 00058
	A13	1.6	5.9	7.4	1.1	0.00031

a/ At 2.75 m sampling height.

b/ Isokinetic.

TABLE B-10. PARTICLE SIZING DATA SUMMARY--ORE PILE STACKING
(Density = 4.5 to 4.9 g/cm^3)

Pile material	Run	Cascade Impactor: Mass median diameter (µm)	Cascade Impactor: Percent < 30 µm	Cascade Impactor: Percent < 5 µm	Cascade Impactor: Ratio[a/]	Profiler: Weighted average % captured on the filter
Pellets	A8	> 100	22	8	0.36	23
	A9[b/]					30
	A10	> 100	10	3	0.33	34
Open hearth ore	A11	> 100	11	3	0.27	42
Desert mound ore	A12	> 100	11	3.5	0.32	10
	A13	> 100	25	7	0.28	17

a/ Percent < 5 µm ÷ percent < 30 µm.

b/ Sierra not used.

TABLE B-11. CORRECTED EMISSION FACTOR SUMMARY--ORE PILE STACKING

Pile material	Run	Emission factor (E)[a] (lb/ton)	Material transferred (tons)	Surface material: Density (g/cm^3)	Surface material: Silt (s) (%)	Surface material: Moisture (M) (%)	Wind Speed (U) (mph)	$\frac{EM^2}{sU}$
Pellets	A8	0.0040	500	4.9	4.8	0.64	2.3	0.00015
	A10	0.010	210				4.5	0.00019
Open hearth ore	A11	0.00099	293	4.5	2.8	0.5	1.8	0.000049
Desert mound ore	A12	0.00066	333	4.5	11.9	4.3	1.8	0.00057
	A13	0.00046	373		19.1		2.2	0.00021

a/ Represents particles smaller than 30 microns in diameter.

Table B-12 presents an example emission factor calculation. The calculation is based on data for Run A8.

TABLE B-12. EXAMPLE CALCULATION FOR RUN A8--ORE PILE STACKING

	Result
A. Plot filter exposure versus sampler location.	--
B. Graphically integrate to determine the area under the exposure surface.	2.0 lb
C. Divide B by the quantity of material piled to arrive at the integrated filter exposure.	0.0041 lb/ton
D. Multiply C by the ratio of the percent <30 μm (22%) over the weighted average percent suspended (23%) to obtain the emission factor for particles smaller than 30 μm.	0.004 lb/ton
E. Correct D to isokinetic conditions following the procedure given in Appendix A. (All coarse particles; therefore correction factor = 1.)	0.004 lb/ton

4.0 Traffic on Unpaved Roads

Table B-13 gives information on the time of each unpaved road run and the prevailing meteorological conditions at the site. Also given for each run is the number of vehicle passes by vehicle type.

Table B-14 lists the individual point values of exposure (net mass per sampling intake area) within the fugitive dust plume as measured by the exposure profiling equipment. Also given for each high-volume sampling head is the exposure measurement consisting of particulate collected by the filter following the settling chamber.

Table B-15 gives for each run the integrated exposure value and compares particulate concentrations measured by the upwind hi-vol and by three types of downwind samplers (exposure profiling head, standard hi-vol, and high-volume cascade impactor) located in close proximity, near the center of the plume. Concentrations measured by the profiler are significantly lower than values measured by the other two units because the profiler sampled at 3 m above ground rather than 2 m.

Table B-16 summarizes the particle sizing data for the six unpaved road tests. Particle size is expressed as Stokes (equivalent-sphere) diameter based on actual density of silt-size particles. In addition to data from the cascade impactor measurements, Table B-16 also gives for each run the average percent of the exposure measurement consisting of filter catch weighted by the exposure value measured by each sampling head.

Table B-17 presents the emission factors corrected to represent particles smaller than 30 μm in diameter. Also indicated in Table B-17 are material properties and wind conditions which constitute correction factors to the emission factors.

Table B-18 presents an example emission factor calculation. The calculation is based on data for Run A14.

TABLE B-13. EMISSIONS TEST PARAMETERS--UNPAVED ROADS

Surface material	Run	Date	Start time	Exposure sampling duration (min)	Source orientation	Ambient temperature (°F)	Wind direction/ speed (mph)	Cloud cover (%)	No. of vehicle passes
Fine Slag	A7	4/19/77	1110	30	E-W	-	NNW/17	0	50 Light Duty
	A14	4/22/77	1105	17	N-S	66	W/8	30	15 70-Ton Loaded
	A15	4/22/77	1420	17	N-S	82	W/8	60	15 70-Ton Loaded
Hard-Base Dirt	E1	6/15/77	1035	30	N-S	74	NE/4	50[a]	16 Mixed[b]
Segment 1	E2	6/15/77	1125	55	N-S	76[a]	NE/5	50	16 Mixed[b]
	E3	6/15/77	1500	18	N-S	79	ENE/9	50[a]	17 Mixed[c]
Segment 2	E4	6/17/77	0948	12	NW-SE	78	SW/7	Hazy	30 Light Duty
	E5	6/17/77	1035	13	NW-SE	80	WSW/7	-	30 Light Duty
	E6	6/17/77	1120	16	NW-SE	82[a]	WSW/9	-	30 Light Duty

a/ Assumed value.

b/ 1 = Light duty; 6 = medium duty; 9 = heavy duty.

c/ 6 = Light duty, 5 = medium duty, 6 = heavy duty.

TABLE B-14. PLUME SAMPLING DATA--UNPAVED ROADS

Run	Sampling height (m)	Sampling rate (cfm)	Total exposure (mg/cm^2)	Filter exposure (mg/cm^2)
A7	1	31	5 34	5 46
	2	33	2.90	3 15
	3	29	1.54	1.47
	4	35	0 28	0.32
A14	1.5	13	17.9	4.38
	3	16	6 33	1 89
	4.5	14	5.11	1 33
	6	16	1.39	0.42
A15	1.5	14	12.5	3.24
	3.0	17	6.78	2.16
	4.5	15	5.91	1.65
	6.0	16	2.97	0.89
E1	1.5	11.2	4.53	2.5
	3 0	12 7	3.67	1.9
	4.5	14 2	2.33	1 4
	6.0	14.9	1.24	0 7
E2	1 5	14.9	4.43	2 5
	3.0	16.5	3.16	1 7
	4.5	18.6	2.92	1.8
	6.0	19.6	1.79	1.0
E3	1.5	14 0	5 76	3.0
	3.0	17.2	3.07	1.5
	4.5	19 2	1 70	0.9
	6.0	20 2	0.95	0 3
E4	1	10.7	4.24	2 2
	2	12.7	2.94	1.8
	3	14.2	1.80	1 1
	4	14 9	0.86	0.5
E5	1	18.2	5.70	3.3
	2	21.2	3.42	2 3
	3	22.5	1.82	1.2
	4	24 0	0.68	0.5
E6	1	14.9	8.15	4.8
	2	17.2	2.25	1.3
	3	18.7	2.47	1.7
	4	20.2	0 76	0.6

TABLE B-15. SUSPENDED PARTICULATE CONCENTRATION AND EXPOSURE MEASUREMENTS--UNPAVED ROADS

Surface material	Run	Particulate concentration ($\mu g/m^3$) at 2 m above ground: Background	Downwind, including background: Profiler[b/]	Standard Hi-Vol	Cascade Impactor	Isokinetic ratio for profiler u/U	Integrated filter exposure (lb/vehicle mile)
Fine Slag	A7	284	2610	2910	6440	0.8	5.6
	A14	134	5660[a/]	--	15600	0.8	16
	A15	134	6190[a/]	14960	16600	0.8	16
Dirt	E1	156	10500[a/]	8370	9970	1.4	18
	E2	156	4230[a/]	3720	5710	1.4	19
	E3	156	7890[a/]	15200	17600	0.8	16
Dirt	E4	937	17500	--	19700	0.8	7.7
	E5	937	13200	13800	13600	1.3	11
	E6	937	7790	14300	15600	0.8	14.2

a/ 3 m Sampling height.

b/ Isokinetic.

TABLE B-16. PARTICLE SIZING DATA SUMMARY--UNPAVED ROADS (Density = 3 g/cm^3)

Surface material	Run	Cascade Impactor: Mass median diameter (μm)	Cascade Impactor: Percent <30 μm	Cascade Impactor: Percent <5 μm	Cascade Impactor: Ratio[a]	Profiler: Weighted average % captured on the filter
Fine Slag	A7	35	46	12	0.26	56
	A14	18	60	26	0.43	42
	A15	15	65	28	0.43	42
Dirt	E1	18	61	24	0.39	56
	E2	27	53	18	0.34	58
	E3	25	54	20	0.37	50
Dirt	E4	9	79	34	0.43	57
	E5	9	75	35	0.47	63
	E6	10	72	34	0.47	62

a/ Percent <5 μm ÷ percent <30 μm.

TABLE B-17. CORRECTED EMISSION FACTOR SUMMARY--UNPAVED ROADS

Surface Material	Run	Emission Factor (E)[i/] (lb/vehicle Mile)	Vehicle Passes	Surface Material Density (g/cm^3)	Surface Material Silt (s) (%)	Vehicle Speed (S) (mph)	Vehicle Weight (tons)
Slag	A7	4.9	50 Light Duty[a/]	3[f/]	4.8	30	3[e/]
	A14	27	15 70-Ton[b/]			30	70[b/]
	A15	29	15 70-Ton[b/]			30	70[b/]
Dirt	E1	17	16[c/]	3.1	8.7	14[g/]	34[h/]
	E2	16	16[c/]			16[g/]	34[h/]
	E3	19	17[d/]			16[g/]	23[h/]
Dirt	E4	13	30 Light Duty[e/]	3.1	4.1	20	3[e/]
	E5	11	30 Light Duty[e/]			20	3[e/]
	E6	19	30 Light Duty[e/]			20	3[e/]

a/ Includes pickup and automobile passes.

b/ 35-Ton vehicle with 35-ton slag load.

c/ Vehicle mix: 1 - light duty
6 - medium duty
9 - heavy duty

d/ Vehicle mix: 6 - light duty
5 - medium duty
6 - heavy duty

e/ Automobile passes only.

f/ Assumed density (Ref. CRC Handbook).

g/ Average vehicle mix speed.

h/ Average weight of vehicles passing sampler location.

i/ Represents particles smaller than 30 microns in diameter.

TABLE B-18. EXAMPLE CALCULATION FOR RUN A14--UNPAVED AND PAVED ROADS

	Result
A. Plot filter exposure versus sampler height.	--
B. Graphically integrate to determine the area under the vertical exposure profile.	240 lb/mile
C. Divide B by the number of vehicle passes to arrive at the integrated filter exposure.	16 lb/vehicle mile
D. Multiply C by the ratio of the percent <30 μm (60%) over the weighted average percent suspended (42%) to obtain the emission factor for particles smaller than 30 μm.	23 lb/vehicle mile
E. Correct D to isokinetic conditions following the procedure given in Appendix A.	27 lb/vehicle mile

5.0 Traffic on Paved Roads

Table B-19 gives information on the time of each paved road run and the prevailing meteorological conditions at the site. Also given for each run is the number of vehicle passes.

Table B-20 lists the individual point values of exposure (net mass per sampling intake area) within the fugitive dust plume as measured by the exposure profiling equipment. Also given for each high-volume sampling head is the exposure measurement consisting of particulate collected by the filter following the settling chamber.

Table B-21 gives for each run the integrated exposure value and compares particulate concentrations measured by the upwind hi-vol and by three types of downwind samplers (exposure profiling head, standard hi-vol, and high volume cascade impactor) located in close proximity, near the center of the plume.

Table B-22 summarizes the particle sizing data for the six paved road tests. Particle size is expressed as Stokes (equivalent-sphere) diameter based on actual density of silt-size particles. In addition to data from the cascade impactor measurements, Table B-22 also gives for each run the average percent of the exposure measurement consisting of filter catch weighted by the exposure value measured by each sampling head.

Table B-23 presents the emission factors corrected to represent particles smaller than 30 μm in diameter. Also indicated in Table B-23 are material properties and wind conditions which constitute correction factors to the emission factors.

Table B-18 in the previous section presents an example emission factor calculation. The calculation is based on data for Run A14.

TABLE B-19. EMISSIONS TEST PARAMETERS--PAVED ROAD

Run	Date	Start time	Exposure sampling duration (min)	Source orientation	Ambient temperature (°F)	Wind direction/ speed (mph)	Cloud cover (%)	Vehicle passes
E7	6/17/77	1510	60	N-S	87	Variable/4	50	126
E8	6/20/77	1010	60	N-S	-	SW/3	25	104
E9	6/20/77	1332	60	N-S	-	Variable/light	25	-

TABLE B-20. PLUME SAMPLING DATA--PAVED ROADS

Run	Sampling height (m)	Sampling rate (cfm)	Total exposure (mg/cm^2)	Filter exposure (mg/cm^2)
E7	1	11.2	.33	.22
	2	12.7	.28	.15
	3	14.2	.45	.24
	4	14.9	.38	.20
E8	1	11.8	.67	.30
	2	12.7	.59	.28
	3	14.9	.63	.41
	4	15.2	.76	.37

TABLE B-21. SUSPENDED PARTICULATE CONCENTRATION AND EXPOSURE MEASUREMENTS--PAVED ROAD

Run	Particulate concentration ($\mu g/m^3$)				Isokinetic ratio for profiler u/U	Integrated filter exposure (lb/veh. mile)
		Downwind, including background				
	Background	Profiler	Standard hi-vol	Cascade Impactor		
E7	239	591[a]	670	660	1.4	0.42
E8	264	1230[a]	923	850	1.8	1.1
E9	264	354	258	565	-[b]	-

a/ Isokinetic.

b/ Light wind.

TABLE B-22. PARTICLE SIZING DATA SUMMARY--PAVED ROAD
(Density = 3 g/cm^3)

	Cascade Impactor				Profiler
Run	Mass median diameter (μm)	Percent < 30 μm	Percent < 5 μm	Ratio[a/]	Weighted average % captured on the filter
E7	5	91	50	0.55	36
E8	9	75	37	0.49	52
E9	7	85	41	0.48	43

a/ Percent < 5 μm ÷ percent < 30 μm.

TABLE B-23. CORRECTED EMISSION FACTOR SUMMARY--PAVED ROAD

Run	Emission factor (E) (lb/vehicle mile)[b/]	Vehicle passes	Surface material: Density (g/cm^3)	Surface material: Silt (s) (%)	Speed (S) (mph)	Loaded vehicle weight (tons)
E7	0.80	126	3.0	5.1	12	7
E8	1.1	104			12	8
E9	a/					

a/ Light and variable winds.

b/ Represents particles smaller than 30 microns in diameter.

6.0 Conveyor Transfer Station

Table B-24 gives information on the time of each conveyor transfer run and the prevailing meteorological conditions at the site. Also given for each run is the quantity of sinter material transfered.

Table B-25 lists the individual point values of exposure (net mass per sampling intake area) within the fugitive dust plume as measured by the exposure profiling equipment.

Table B-26 gives for each run the integrated exposure value and compares particulate concentrations measured by the upwind hi-vol and by two types of downwind samplers (exposure profiling head and high-volume cascade impactor) located in close proximity, near the center of the plume.

Table B-27 summarizes the particle sizing data for the six conveyor transfer tests. Particle size is expressed as Stokes (equivalent-sphere) diameter based on actual density of silt-size particles. In addition to data from the cascade impactor measurements, Table B-27 also gives for each run the average percent of the exposure measurement consisting of filter catch weighted by the exposure value measured by each sampling head.

Table B-28 presents the emission factors corrected to represent particles smaller than 30 um in diameter. Also indicated in Table B-28 are material properties and wind conditions which constitute correction factors to the emission factors.

Table B-29 presents an example emission factor calculation. The calculation is based on data for Run E10.

TABLE B-24. EMISSIONS TEST PARAMETERS--CONVEYOR TRANSFER

Run	Date	Start time	Exposure sampling duration (min)	Source orientation	Wind direction/ speed	Cloud cover (%)	Material transferred (tons)
E10	6/21/71	0910	15	E-W to N-S	Variable/calm	25	52
E11	6/21/77	1114	15		Variable/calm	25	52
E12	6/21/77	1220	15		Variable/calm	25	52

TABLE B-25. PLUME SAMPLING DATA--CONVEYOR TRANSFER

Run	Probe unit no.	Sampling height (m)	Sampling rate (cfm)	Total exposure (mg/cm^2)
E10	5	2.2	.65	16.8
	4	1.6	.65	17.2
	1	1.6	.65	39.5
	2	1.6	.65	51.0
	3	1.1	.65	32.2
E11	2	2.2	.65	45.6
	3	1.6	.65	26.8
	5	1.6	.65	31.2
	1	1.6	.65	57.1
	4	1.1	.65	30.4
E12	4	2.2	.65	16.1
	3	1.6	.65	31.2
	5	1.6	.65	20.3
	1	1.6	.65	14.6
	2	1.1	.65	18.6

TABLE B-26. SUSPENDED PARTICULATE CONCENTRATION AND EXPOSURE MEASUREMENTS--CONVEYOR TRANSFER

Run	Particulate concentration (mg/m^3)			Integrated filter exposure (lb/ton)
		Downwind, including background		
	Background	Profiler	Cascade impactor	
E10	3.30	102	481	0.043
E11	1.23	81	39	0.084
E12	1.23	52	25	0.038

TABLE B-27. PARTICLE SIZING DATA SUMMARY--CONVEYOR TRANSFER
(Density = 3.8 g/cm^3)

	Sierra				Profiler
Run	Mass median diameter (μm)	Percent < 30 μm	Percent < 5 μm	Ratio[a/]	Weighted average % captured on the filter
E10	19	61	20	0.33	72
E11	31	49	19	0.39	65
E12	21	57	23	0.40	59

a/ Percent < 5 μm ÷ percent <30 μm.

TABLE B-28. CORRECTED EMISSION FACTOR SUMMARY--CONVEYOR TRANSFER

Run	Emission factor (e) (lb/ton)	Material transferred (tons)	Material characteristics: Density (g/cm^3)	Material characteristics: Silt (s) (%)	Wind Speed (U) (mph)
E10	0.036	52	3.79	0.7	Calm
E11	0.064	52			Calm
E12	0.037	52			Calm

TABLE B-29. EXAMPLE CALCULATION FOR RUN E10--CONVEYOR TRANSFER

	Result
A. Plot filter exposure versus sampler location.	--
B. Graphically integrate to determine the area under the exposure surface.	3.1 lb
C. Divide B by the quantity of material transferred to arrive at the integrated filter exposure.	0.043 lb/ton
D. Multiply C by the ratio of the percent <30 μm (61%) over the weighted average percent suspended (72%) to obtain the emission factor for particles smaller than 30 μm.	0.036 lb/ton

APPENDIX C

STABILIZATION CHEMICALS FOR OPEN DUST SOURCES

The following table lists various dust suppression chemicals and their resultant control efficiencies. These chemicals were placed on mock coal storage piles placed in a wind tunnel simulating an average wind velocity of 10 to 11 mph. The two dust suppression chemical application schemes deemed most economical and efficient were Nos. 21 and 22 in the following table.[1/]

	Dust Suppression Chemical (water plus as listed)	Control Efficiency (%)
1.	Dustrol "A" 1:5000	-7.8
2.	T-Det 1:4	76
3.	CaO 1%	2.8
4.	$CaCl_2$ 2%	33.8
5.	Cements 5%	26.8
6.	Coherex 1:15	22.5
7.	Coherex 1:8	15.5
8.	Coherex 1:4	97.2
9.	Dowell Chemical Binder 1%	70.4
10.	Dowell Chemical Binder 2%	97.2
11.	Dowell Chemical Binder 3%	97.2
12.	1% $CaCl_2$, in 1:5000 Dustrol "A"	15.5
13.	1% CaO in 1:8 Coherex	31
14.	1% CaO in 2% Dowell Chemical Binder	95.1
15.	1% CaO in 3% Dowell Chemical Binder	81.7
16.	Dried Whole Blood 5%	27.1
17.	Dried Pork Plasma 5%	79
18.	Dried Pork Plasma 3%	96
19.	1% $CaCl_2$ in 3% Pork Plasma	52
20.	Dri-Pro 5%	7
21.	1% CaO, 1:3000 T-Det in 2% Dowell Chemical Binder	98.6
22.	1% CaO, 1% $CaCl_2$, 1:4000 Dustrol "A" + 2% Dowell Chemical Binder	98.6

REFERENCE

1. Boscak, V., and J. S. Tandon. Development of Chemicals for Suppression of Coal Dust Dispersion from Storage Piles. Paper Presented at the 4th Annual Environmental Engineering and Science Conference, Louisville, Kentucky, March 4 and 5, 1974.