U.S. DEPARTMENT OF COMMERCE
National Technical Information Service

PB-249 049

FUTURE DIRECTION OF URBAN WATER MODELS

WATER RESOURCES ENGINEERS, INCORPORATED

PREPARED FOR

MUNICIPAL ENVIRONMENTAL RESEARCH LABORATORY

FEBRUARY 1976

KEEP UP TO DATE

Between the time you ordered this report—which is only one of the hundreds of thousands in the NTIS information collection available to you—and the time you are reading this message, several *new* reports relevant to your interests probably have entered the collection.

Subscribe to the **Weekly Government Abstracts** series that will bring you summaries of new reports *as soon as they are received by NTIS* from the originators of the research. The WGA's are an NTIS weekly newsletter service covering the most recent research findings in 25 areas of industrial, technological, and sociological interest—invaluable information for executives and professionals who must keep up to date.

The executive and professional information service provided by NTIS in the **Weekly Government Abstracts** newsletters will give you thorough and comprehensive coverage of government-conducted or sponsored research activities. And you'll get this important information within two weeks of the time it's released by originating agencies.

WGA newsletters are computer produced and electronically photocomposed to slash the time gap between the release of a report and its availability. You can learn about technical innovations immediately—and use them in the most meaningful and productive ways possible for your organization. Please request NTIS-PR-205/PCW for more information.

The weekly newsletter series will keep you current. But *learn what you have missed in the past* by ordering a computer **NTISearch** of all the research reports in your area of interest, dating as far back as 1964, if you wish. Please request NTIS-PR-186/PCN for more information.

WRITE: Managing Editor
5285 Port Royal Road
Springfield, VA 22161

Keep Up To Date With SRIM

SRIM (Selected Research in Microfiche) provides you with regular, automatic distribution of the complete texts of NTIS research reports *only* in the subject areas you select. SRIM covers almost all Government research reports by subject area and/or the originating Federal or local government agency. You may subscribe by any category or subcategory of our WGA **(Weekly Government Abstracts)** or **Government Reports Announcements and Index** categories, or to the reports issued by a particular agency such as the Department of Defense, Federal Energy Administration, or Environmental Protection Agency. Other options that will give you greater selectivity are available on request.

The cost of SRIM service is only 45¢ domestic (60¢ foreign) for each complete microfiched report. Your SRIM service begins as soon as your order is received and processed and you will receive biweekly shipments thereafter. If you wish, your service will be backdated to furnish you microfiche of reports issued earlier.

Because of contractual arrangements with several Special Technology Groups, not all NTIS reports are distributed in the SRIM program. You will receive a notice in your microfiche shipments identifying the exceptionally priced reports not available through SRIM.

A deposit account with NTIS is required before this service can be initiated. If you have specific questions concerning this service, please call (703) 451-1558, or write NTIS, attention SRIM Product Manager.

This information product distributed by

EPA-600/2-76-058
February 1976

FUTURE DIRECTION OF URBAN WATER MODELS

by

Michael B. Sonnen
Larry A. Roesner
Robert P. Shubinski

Water Resources Engineers, Inc.
Walnut Creek, California 94596

Contract No. 68-03-0499

Project Officer

Chi-Yuan Fan
Storm and Combined Sewer Section (Edison, N. J.)
Municipal Environmental Research Laboratory
Cincinnati, Ohio 45268

MUNICIPAL ENVIRONMENTAL RESEARCH LABORATORY
OFFICE OF RESEARCH AND DEVELOPMENT
U.S. ENVIRONMENTAL PROTECTION AGENCY
CINCINNATI, OHIO 45268

TECHNICAL REPORT DATA
(Please read Instructions on the reverse before completing)

1. REPORT NO. EPA-600/2-76-058	2.	3. RECIPIENT'S ACCESSION NO.
4. TITLE AND SUBTITLE FUTURE DIRECTION OF URBAN WATER MODELS		5. REPORT DATE February 1976
		6. PERFORMING ORGANIZATION CODE
7. AUTHOR(S) Michael B. Sonnen, Larry A. Roesner, Robert P. Shubinski		8. PERFORMING ORGANIZATION REPORT NO. 12490
9. PERFORMING ORGANIZATION NAME AND ADDRESS Water Resources Engineers, Inc. 710 South Broadway, Suite 200 Walnut Creek, California 94596		10. PROGRAM ELEMENT NO. 1BB034;ROAP 21-ATA;Task 027
		11. CONTRACT/GRANT NO. 68-03-0499
12. SPONSORING AGENCY NAME AND ADDRESS Municipal Environmental Research Laboratory Office of Research and Development U.S. Environmental Protection Agency Cincinnati, Ohio 45268		13. TYPE OF REPORT AND PERIOD COVERED Final
		14. SPONSORING AGENCY CODE EPA-ORD

15. SUPPLEMENTARY NOTES

16. ABSTRACT

The state-of-the-art of urban water modeling since 1968 was reviewed. Urban water subsystems addressed were: rainfall, runoff, and snowmelt; urban watersheds; water supply; water distribution facilities; water use; waste collection and conveyance; waste treatment; receiving waters; and water reuse. Future urban water models were suggested from 1) the review and, 2) demonstrated needs for additional problem solving capabilities. A phased model implementation program for the EPA's Storm and Combined Sewer Section was suggested. Contains 161 references.

KEY WORDS AND DOCUMENT ANALYSIS

a. DESCRIPTORS	b. IDENTIFIERS/OPEN ENDED TERMS	c. COSATI Field/Group
Mathematical models, Urban areas, Federal budgets, Reviews, Water supply, Waste disposal, Planning, Operations, Maintenance, Systems engineering	State-of-the-art review, Urban water management, Runoff quality, Water resources economics Water management, Storm runoff, Water reuse Optimum design	13 B

18. DISTRIBUTION STATEMENT Release to public	19. SECURITY CLASS (This Report) UNCLASSIFIED
	20. SECURITY CLASS (This page) UNCLASSIFIED

EPA Form 2220-1 (9-73)

FOREWORD

Man and his environment must be protected from the adverse effects of pesticides, radiation, noise and other forms of pollution, and the unwise management of solid waste. Efforts to protect the environment require a focus that recognizes the interplay between the components of our physical environment--air, water, and land. The Municipal Environmental Research Laboratory provides this multidisciplinary focus through programs engaged in

- studies on the effects of environmental contaminants on man and the biosphere, and

- a search for ways to prevent contamination and to recycle valuable resources.

In this study, a review was made for the Storm and Combined Sewer Section concerning existing urban water mathematical modeling capability. From this review, gaps in needed modeling technology were identified, and a philosophical approach to filling those gaps was developed. Finally, a phased implementation program for developing the needed models was suggested.

Louis W. Lefke
Acting Director
Municipal Environmental
Research Laboratory

ABSTRACT

A literature review was made to assess the state-of-the-art of urban water mathematical modeling since 1968. Particular urban water phenomena or subsystems addressed included: rainfall, runoff, and snowmelt; urban watersheds; water supply; water distribution systems; water use; waste collection and conveyance; waste treatment; receiving waters; and water reuse.

Current model development work and uses of models, as well as the problems being addressed with models, were also reviewed.

Future urban water models were suggested based on 1) the state-of-the-art review and 2) the demonstrated need for ability to treat certain existing planning and design problems.

A phased implementation program for model development was suggested for the Storm and Combined Sewer Section of the U. S. Environmental Protection Agency. This program took cognizance of both the Section's current and historical programs and the needs identified earlier in the report.

This report was submitted in fulfillment of Contract Number 68-03-0499 by Water Resources Engineers, Inc. under the sponsorship of the Environmental Protection Agency. Work was completed as of June 1975.

CONTENTS

	Page
Foreword	iii
Abstract	iv
List of Figures	vi
List of Tables	vi
Acknowledgments	vii
Sections	
I Conclusions	1
II Recommendations	3
III Background of Study	5
IV Modeling Philosophy	9
V State-of-the-Art	29
VI Future Urban Water Models	57
VII Phased Implementation Program	68
VIII References	72

Page

the Intensity of Urban 11
and Successes with

ACKNOWLEDGMENTS

Mr. Murray B. McPherson served as an advisor to this project. He is the Director of the Urban Water Resources Research Program of the American Society of Civil Engineers. His review of literature on water distribution systems, which was used here substantially as he prepared it, was supported by Contract No. 14-31-0001-4224, Office of Water Research and Technology, U.S. Department of the Interior. The writers wish to thank him not only for this section of the report, but also for his continued helpful suggestions throughout the project, and for his review of the draft final report.

Additionally, during the course of this work, many current users of urban water models were contacted and asked their opinion about future needs in this area. Others who are "front-line" water and wastewater managers and who constantly face the problems needing earliest attention were also contacted, whether they were currently using models or not. Among this group, there were many who took special and lengthy efforts to respond. These included John J. Bailey, Jr., Dan Brock, Neil Grigg, Brendan Harley, Stifel Jens, D. Earl Jones, Robert McWhinnie, George Smoot, L. Scott Tucker, and Harry Wenzel. These gentlemen are thanked for their help, as are the numerous unnamed persons with whom this topic was discussed generally over a period of many months.

The Project Officer for EPA was Chi-Yuan Fan, who provided technical guidance and product review throughout the project. Richard Field also contributed product review for EPA; and the improvements made through their knowledgeable backgrounds and experiences are acknowledged with gratitude.

Will B. Betchart of WRE reviewed many of the background literature citations and prepared a written synthesis of that work.

SECTION I

CONCLUSIONS

This project included a review of literature and numerous discussions with model developers and model users who are currently improving the state-of-the-art of urban water modeling. From analysis of information gathered from these sources, the following conclusions are drawn.

1) Emphasis in urban water modeling should remain for the immediate future with simulation of discrete processes occurring in the overall urban setting. That is, we should continue to simulate subsystems before attempting simulation or formal optimization of connected subsystems.

2) In the past, rather serious communications problems have arisen between model developers and subsequent users of those models who know little or nothing of the program's coding, assumptions, data requirements, or limitations. Even documentation reports and user's manuals intended to avoid these problems have not been adequate. Users of programs of all types developed by second parties have inadvertently attempted to use the programs for problems outside the limits of the codes' applicability. There is no simple way to avoid this continuing problem. There are two tedious ways: 1) Users should be trained and constantly informed of progress and direction during the development process, and 2) Developers should include redundancies and hypersimplifications both within the computer program and its output messages and within their documentation and user's manuals.

3) The Storm and Combined Sewer Section of EPA should become involved in development of analysis tools for other urban water subsystems besides urban runoff, sewer systems, and receiving waters. But the expansion into other areas should occur systematically and as a result

of developments of more refined techniques in its traditional area of expertise. The potential reuse of urban stormwater and even wastewater or mixtures of both provides the logical first step into expansion into other subsystems, such as water supply, water use, and waste disposal.

SECTION II

RECOMMENDATIONS

It is recommended that the Storm and Combined Sewer Section consider fairly immediate support of model developments and demonstrations in the areas of 1) runoff transport modeling, 2) real-time control technology for combined sewer systems, and 3) receiving water quality-economics models.

Particularly important items worthy of slightly later support include 1) a reclamation/reuse routing model for quantities and qualities of urban water, 2) a long-period ecologic model for receiving waters, and 3) an improved runoff quality simulation model.

The overall program for model development recommended to be undertaken by 1980 includes development of the following capabilities. For planning of urban water facilities:

1) A new and better watershed quality model.

2) A transport simulation capability in a planning model for storage, treatment, and overflow evaluations.

3) Capability to simulate control or treatment processes in the same model mentioned in 2 above.

4) A long-period year (10-30) receiving water ecologic model.

5) An urban water users economic effects model.

6) A downstream water users (receiving water or reuse) economic effects model.

For design or analysis of specific facilities, the following models are needed.

1) A solids deposition and scour simulation capability in a hydraulically sound sewer transport model.

2) Improved dry-weather waste treatment simulation capability in existing combined sewer design/analysis models.

3) Reclamation or reuse routing capability in a transport/treatment model.

4) Nonstructural runoff control simulation capability in existing urban runoff analysis models.

For operation and control of urban water facilities, the following capabilities should be developed.

1) Real-time control software for sewer systems.

2) Real-time spatially varied rainfall prediction capability.

SECTION III

BACKGROUND OF STUDY

SCOPE AND OBJECTIVES

The Storm and Combined Sewer Section of the U.S. Environmental Protection Agency (EPA) wished to have an independent evaluation of the future direction that it should take in urban water management modeling. Accordingly, the purpose of this study was to review the current state-of-the-art of models that have potential for becoming integral parts of a larger model package and to define points of possible interface between hydrologic models and models of treatment or control facilities. The resulting report was to contain a phased plan of model development which the Section could use as a guide for planning its overall, modeling program.

EPA for several years has been sponsoring the development of the Storm Water Management Model (SWMM). This model is a complex simulation model for the dynamic events of rainfall and runoff, sewer transport of combined wastes, and behavior of receiving waters to which such wastewaters are discharged. This model and several variants have been extensively applied. Several EPA projects have demonstrated the usefulness of these models in analyses of abatement alternatives and determination of their environmental effects.

It appears, as our ability to develop and use such models increases, that a requirement exists to define a next "generation" of models incorporating the entire urban water management system. The increasing emphasis on joint control of water supply and wastewater systems, the development of refined storage, treatment, and control systems for combined sewers, the requirement to assess the water reuse potential of such systems, and the increasing need of planners to assess the impacts of alternative land use plans also argue for such models. Indeed, it seems clear that urban water management must be considered in the largest context.

Future urban water models should recognize both the heirarchies and categories of use to which they may be applied. Hierarchies of

use vary from the closely defined needs of an engineer solving a specific, single overflow problem to the loosely defined needs of a regional planner attempting to evaluate various land use alternatives to arrive at zoning decisions. While it might be hoped that a single program of computer cards could address each of these problems and intermediate ones as well, it is recognized at the outset that this will very likely not be completely feasible. Categories of use may be: description of the behavior of an existing sewer system subjected to a specified input, design or planning of a new system, or operation or control of an existing system.

Models to be developed should emphasize the physical system and its operation, but the same or other computer programs should also evaluate the costs of the alternative systems simulated. The first step, however, should not be to develop a comprehensive economics model in the larger context; social and political questions such as pricing schemes would not be given early consideration and are beyond the scope of this study.

Both previous studies and current model development work were reviewed, and a definition of the next generation of needed urban water management models was forthcoming from that review. In particular, workers involved in the following previous studies were contacted:

1) Urban Water Resources Research Program of American Society of Civil Engineers, 23 Watson Street, Marblehead, Massachusetts 01945.

2) Colorado State University's Metropolitan Water Intelligence Systems Study, Colorado State University, Civil Engineering Department, Fort Collins, Colorado 80521.

3) University of Florida's Storm and Combined Sewer Modeling Program (SWMM development), University of Florida, College of Engineering, Department of Environmental Engineering Science, Gainesville, Florida 32601.

4) EPA Municipal Environmental Research Laboratory, Systems & Economic Analysis Section, Cincinnati, OH 45268

5) Storm and Combined Sewer Section, EPA, Edison, New Jersey 08817.

6) Resource Analyses, Inc., Cambridge, Massachusetts 02139.

Current developments in progress, about which EPA furnished the contractor with information, included work in progress at:

1) Battelle Memorial Institute, Pacific Northwest Laboratories (EPA Contract No. 68-03-0251).

2) University of Illinois, Department of Civil Engineering (EPA Contract No. 68-03-0302).

3) American Public Works Association Research Foundation, and University of Florida (EPA Contract No. 68-03-0283).

4) City and County of San Francisco, Division of Sanitary Engineering.

The study was to define a phased development approach, since it may not be possible to fund the work recommended in a single year. Such phasing was to be ordered as follows:

1) Wet and dry weather facilities considered together.

2) Addition of systems control considerations.

3) Addition of water reuse considerations.

The definition produced was to be in "broad general terms" and was to include consideration of:

1) A basic philosophical approach to such modeling.

2) Specific components of such a model package.

3) Reliable treatment effectiveness models or routines.

4) Ability of each model to assess receiving water impacts.

5) Costs associated with using each model.

6) Selection of "best" model to optimize 4 and 5 above.

7) Costs associated with developing each model.

8) Relationship of each model to system operation or control, if any.

9) Data needs and availability for each model.

ORGANIZATION OF THIS REPORT

Following this section, Section IV addresses the first and most important item for consideration, the general modeling philosophy.

Section V reviews the state-of-the-art in urban water modeling, both as reflected in the literature and as the study team was able to discern progress underway through discussion with investigators and model users around the country. Section VI outlines the urban water management models that should be developed in the near future. Section VII gives a phased program of model development support whereby the Storm and Combined Sewer Section can most effectively help in assuring that the model needs specified in Section VI are met.

SECTION IV

MODELING PHILOSOPHY

GENERAL QUESTIONS

Before specifying needed future urban water models, we must establish 1) the problems of the immediate future to be addressed, and 2) the current capability for dealing with those problems in terms of available models. Then we will be able to define, by a subjective sort of subtraction, which models remain to be developed. But we can see straightaway that such an X - Y = Z approach is too simplistic. The X's, or problem definitions, and the Y's, or available model capabilities, are each functions of parameters yet undefined or whose size is yet unresolved. Consequently, we must first provide the limitations on X and Y through a philosophical process of definition.

Some general questions could be raised to draw into perspective the modeling work remaining to be done.

1) Which urban water problems require early attention of model developers, given the base of knowledge and card decks available today on which to draw?

2) Who are the likely users of the capability(ies) to be developed, and what are likely to be their requirements in terms of ease of use, comprehensiveness and time and space detail?

3) Should emphasis remain with storm and combined sewer modeling, should it be placed somewhere else, or should it be removed to give more attention to each of the various portions of the urban water resources system?

4) Should the planning, design, and operation hierarchies of analysis, which heretofore have been related primarily to the temporal details of models, be stressed or downplayed?

5) What realistic opportunities exist for combining separate programs through interface programming to build more comprehensive urban water models dealing with more than one subsystem?

6) What, if any, should be the formalized computerized degree of data management capability? Is a "Data Management System" a necessity for using the eventual capability to be developed? Is there a need for a nation-wide repository of model-ready urban water data, as some have suggested?

Some of these questions will not be answered in this report. The remainder of this chapter will address them all, however, and hopefully the early portions of the phased implementation program outlined in Section VII will answer those left unresolved here.

HISTORICAL PERSPECTIVE

The somewhat strange diagrams of Figure 1 are intended to address historically the nation's perception of the size or importance of its urban water problems, as well as to show the relative success that mathematical modelers have had in developing tools that significantly aided solutions. Such a diagram is open to considerable argument, of course, but it is presented merely as an illustration of the writers' view of recent history, not necessarily as incontrovertible fact. The point of it is to illustrate that for many urban water subsystems the importance of "the problem" has recently become or remained greater than the capability of models available or verified, despite the progress in modeling in the last decade.

Without citing reference to some obvious works, we might dwell for a moment on that history. A "blue book" was published in 1962 wherein the first comprehensive work on systems analysis in water engineering was directed to river basin planning. Also unfortunately systems analysis was oversold both by the book's authors and by the sycophants who clung to their coattails. This work was produced during the Kennedy administration which included Secretary McNamara, an advocate of systems analysis in its larger but more business oriented sense. It was logical, perhaps, that computer using engineers would suggest that their tools would be directly and importantly of service to government, but routine usage has been long in coming, and many individuals and governmental bodies have become discouraged and disgusted with systems analysis in the interim. Nonetheless, river basin systems analysis blossomed and then waned, until the Texas Water Development Board began analyzing the Texas Water Plan; and, as time went on, more and more basins were eyed as potential sources of water for urban areas hundreds of miles away. The

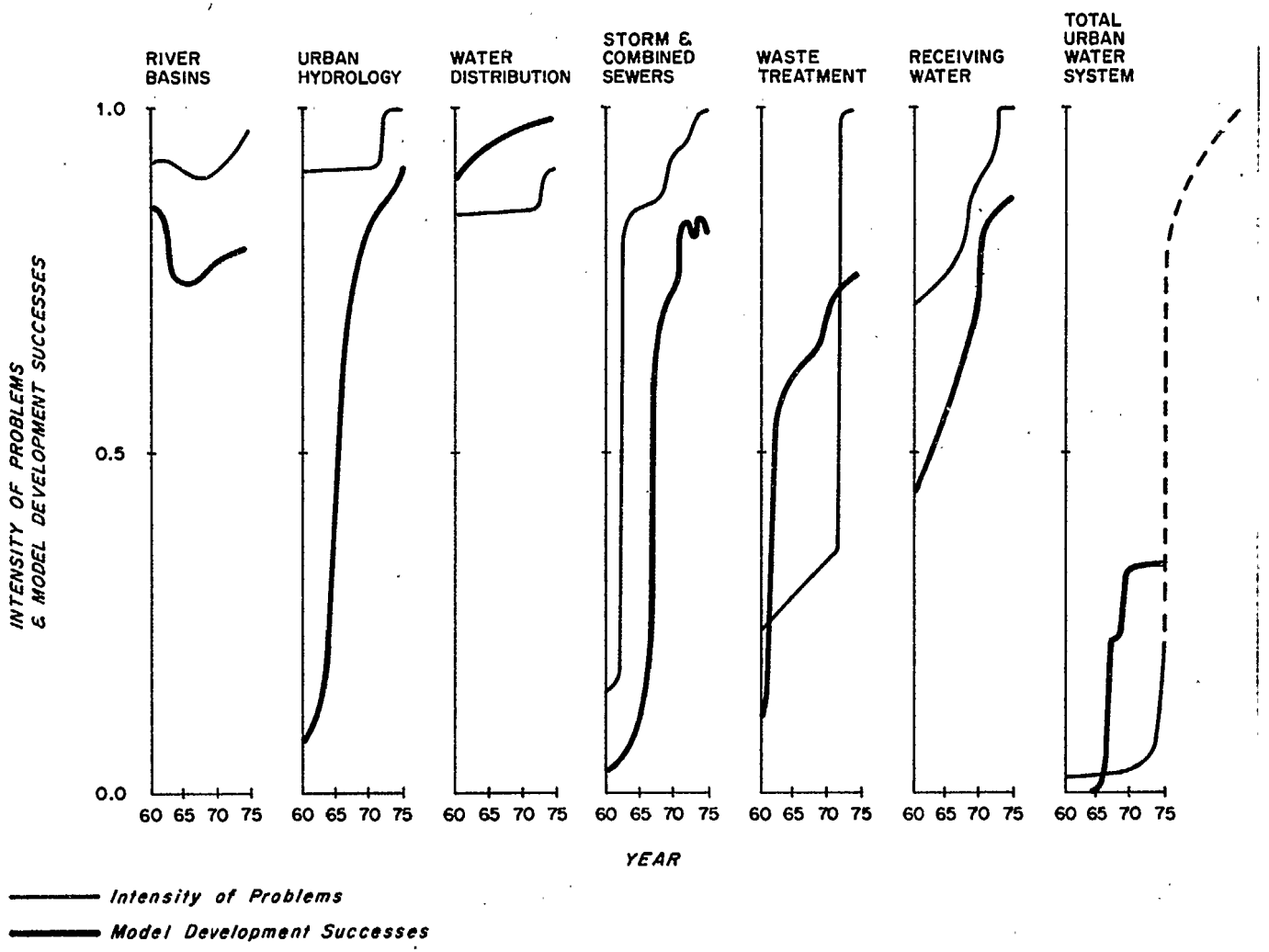

Figure 1 Historical relationships between the intensity of urban water subsystem problems and successes with modeled solutions

importance of river basin planning itself also waned then when the concept of using river basins as planning units fell into some disfavor, but it grew yet again as water became scarcer.

Urban hydrology received considerable attention from modelers as soon as computers became routinely available to them. This resulted in part because urban flooding and drainage problems were acute; damages were high and frequent. Moreover, analysts knew intuitively that the rational method for designing runoff facilities was weak theoretically and yet tedious in complex applications. So hydrographs, unit hydrographs, instantaneous unit hydrographs, systems of linear reservoirs, infiltration equations, Markov chains, and numerous other pieces of the puzzle were fed into the computer. Urban watershed models of quantity and quality have been the latest result. The recent attention to "nonpoint" sources of pollution has raised the importance of the urban runoff problem, while the ability to model the phenomena occurring, particularly the quality phenomena, has culminated for the moment with "dirt and dust" linkages that are theoretically weak, if empirically capable of calibration.

Water distribution systems have been analyzed with computer methods for years. Numerous utilities and private consultants have more than adequate versions of programs that balance heads and flows in these closed systems. Some if not most of the programs deal with numerically complicating system paraphernalia such as pressure reducing valves, variable speed pumps, and the like. The quality of water in these systems has not been included, however, and recent discussions of lead poisoning and carcinogenic substances in water supplies may draw more analysis attention to this important piece of the urban water system.

Storm and combined sewers were perceived to be much more important than previously thought when published results showed that stormwater can contain as much BOD and other pollutants as raw sewage. The Federal Water Pollution Control Act Amendments of 1972, calling ultimately for zero discharge and relatively advanced treatment almost immediately, heightened interest in this problem even more. From about 1968 forward, modeling attention has been concentrated in this area. Now the EPA Storm Water Management Model (SWMM, pronounced "swim") is the most available of the numerous versions of runoff, sewer or conduit transport, and receiving water packages that exist. Several private versions exist in the United States, and there is at least one in Germany and another in France. Another model, much less sophisticated, and hence much easier and more economical to use, is the planning tool called STORM (Storage, Treatment, and Overflow Runoff Model) which was developed for the City of San Francisco. This is a planning model that analyzes long records of historical rainfall to determine frequency of combined sewer overflows, given storage and treatment

availability under alternative plans. Both of these models, SWMM and STORM, include quality simulation capacity in which BOD and suspended solids concentrations are derived from correlations with accumulated "dirt and dust" on the watershed. The transferability of the correlations from available local data has been shown to be fairly weak; and a better, more defensible quality model or analogy is needed.

Waste treatment received a flurry of modeling attention from early systems analysts. Most of this work was directed at optimizing the amount of waste treatment at various points along a stream, given a dissolved oxygen standard and the Streeter-Phelps equation. A later tack was taken to simulate waste treatment processes themselves. The majority of this work to date has been an exercise in programming the rudiments of sanitary engineering design, but some elucidation of process variables has resulted. Waste treatment importance was given a big boost by the National Environmental Policy Act of 1969 and its requirements related to environmental impact reports, but it was driven to its pinnacle of importance by the 1972 Act.

Receiving waters, principally estuaries and freshwater streams, have received considerable modeling attention. Many, many programs to solve the Streeter-Phelps equation along streams were developed in the early 1960's. Link-node models for estuaries with dynamic hydraulic solutions were developed by 1965 for the Delaware estuary and for San Francisco Bay and the Sacramento-San Joaquin Delta Lake and reservoir temperature models and groundwater models followed by 1967-1969. In 1969-1971 the receiving water model called RECEIV was incorporated in the EPA SWMM model. During this period, the feasibility was shown for modeling several aquatic trophic levels and their interrelated responses to ambient water quality as indicated by a host of chemical constituents. This philosophy was eventually demonstrated for San Francisco Bay and Lake Washington. Since then many stream, estuary, and lake models have been developed and updated to include the "ecologic model" interrelationships. Numerous basin modeling projects sponsored by EPA have epitomized this effort during the 1970-1974 period. Throughout the roughly 15-year history of modeling of receiving waters, the capabilities of the developed models have lagged behind the importance of the problems being faced by urban water management decision makers. Current problems specified for attention by the 1972 Act include derivation of "wasteload allocations" for waters designated as "water quality class segments", which are those for which secondary treatment at all point discharges still would not raise quality to levels satisfactory for all designated beneficial uses. Current ecologic models applied to this problem have proved helpful but less than completely satisfactory.

Modeling of the total urban water system has not been extensive, although it has been attempted. In 1968 the ASCE Urban Hydrology Research Council, with OWRR support, coordinated a series of feasibility studies to determine the requirements for performing such a task. The common answer was that a formidable R and D effort would be required. In 1970 an attempt had been made, but the stepwise, explicit simulation model developed was only applicable to limited facilities configurations. Other workers developed an optimization model to move water through an urban set of facilities and users at least cost, but its use was also limited, and no major decisions on urban water policy have been reported to be based on the outputs of such tools.

One application of systems analysis methods to many subsystems of the urban water scene has been performed in the Santa Ana River Basin of Southern California over a period of many years, since 1967. This effort has involved several models or programs, one to simulate the extensive groundwater aquifer that underlies the entire basin, one to organize the large data base describing water import quantities and water uses on the ground surface, and a third to estimate the numerous costs associated with importation, pumping, treatment, delivery, and use of water, as well as the collection, treatment, and disposal of wastes.

It is interesting to note that stormwater collection and disposal facilities have not been included in these otherwise extensive modeling efforts, since there are relatively few facilities provided in the basin for storm runoff management. Moreover, these facilities are not the responsibility of the agencies who have sponsored the work performed.

Pictorially, the urban water resources system was shown by WRE in 1968 to look like Figure 2. The storm sewer was indicated there to be a rather separate piece of equipment which kept its contents apart from municipal wastewaters, although combined systems were recognized to exist. In 1971, the SWMM project was completed wherein EPA contractors had concentrated most heavily on the missing combined sewer part of the picture. The SWMM picture is shown in Figure 3. The result of attempting to be absolutely complete in pictorially representing the urban water system is shown in Figure 4. If that appears to be overcomplicated, exaggerated detail, which WRE tried to avoid in its 1968 schematic, consider the picture of Denver, Colorado, shown in Figure 5. (Note that SWMM would hardly apply to that picture.) Now consider any other real urban water scene and how it is more or less detailed, but certainly different.

The point of the pictures is to show that combined sewer models, waste treatment process models, water distribution system models, or lake temperature models, regardless of their validity, represent only a small fraction of the total urban water picture. Moreover,

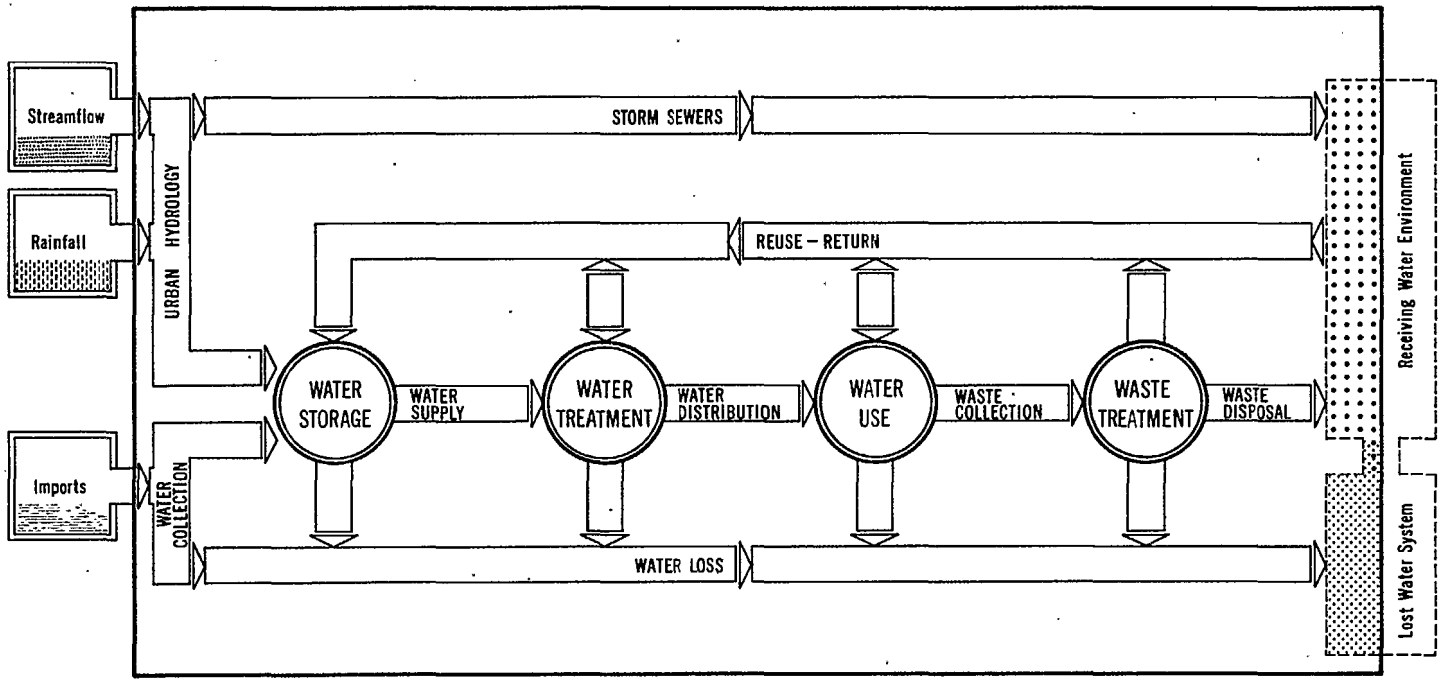

Figure 2 The urban water resources system

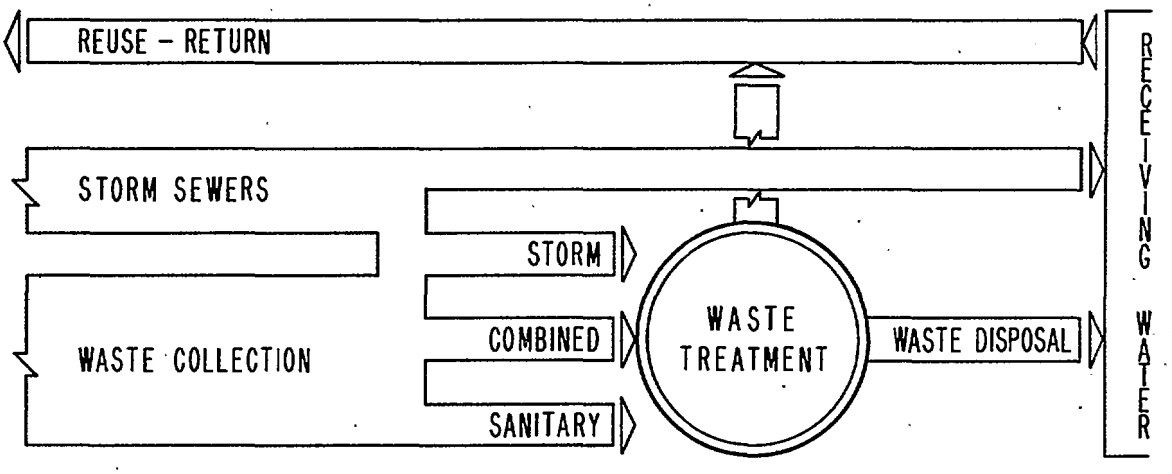

Figure 3 The storm and combined sewer subsystem

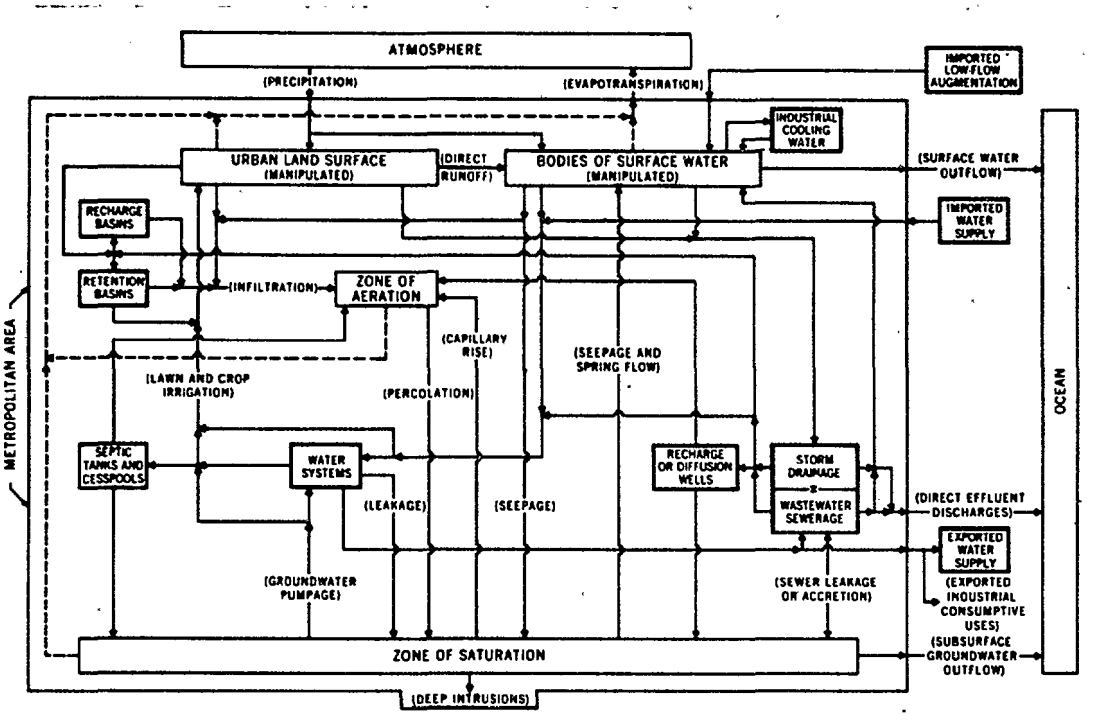

Figure 4 Schematic of the urban hydrologic system (from McPherson, October 1973)

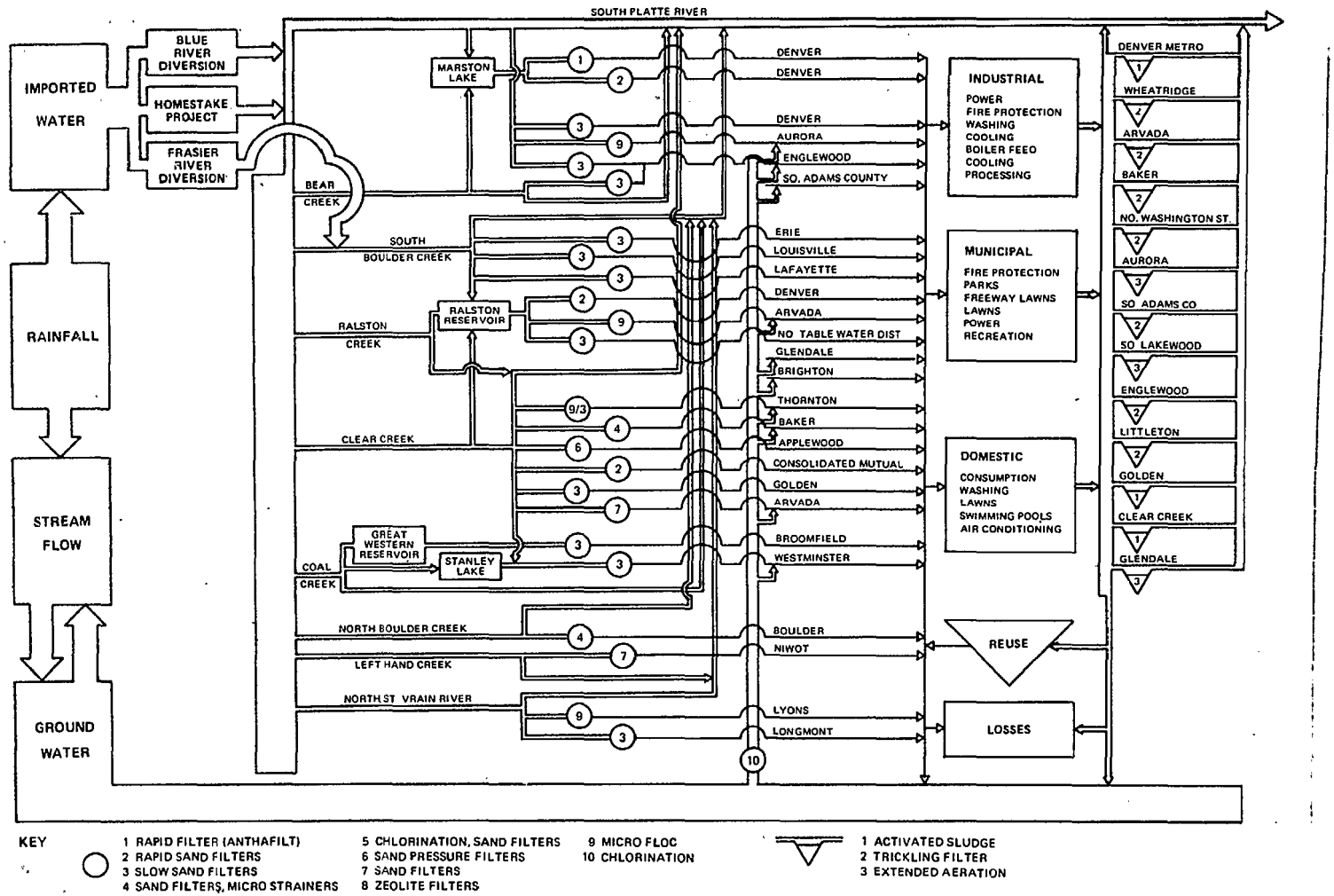

Figure 5 Schematic of Denver's urban water resources system (from McPherson, October 1973, after Smith, 1972)

because the pictures correctly show flow both forward and backward, the flow and quality at any point, say at the entrance to the combined sewer system, may well be functions of the water leaving the other end of the subsystem. In short the urban water system is nonlinear, i.e., many subsystem models are probably given incorrectly estimated inputs every time they are used.

As McPherson [October 1973] pointed out, "a total resource systems approach is necessary if subsystem phenomena truly are to be identified because of the complex linkages involved . . . the initial stage of a comprehensive systems analyses of the water resources of a metropolitan area is essentially nothing more than the attainment of a suitable metropolitan water-balance inventory".

Whipple, et al. [1974] suggested that "unrecorded pollution" from urban areas, which includes all the runoff-carried pollutants not now controlled by collection and treatment agencies or pollutants never before measured by anybody, can be as large or larger than those that are controlled. The implication is that universal secondary treatment will not significantly improve the quality of receiving waters in many places, particularly immediately following storms. The basic thesis is like McPherson's, that metropolitan water balance inventories are not yet complete; and they need to be complete, or uneconomical water quality management plans are likely to result. Recently recognized "nonpoint" sources of pollution merely highlight that the characterizations of stormwater in pipes alone (like SWMM) are incomplete.

To simplify and synthesize what all this appears to mean, the urban water balance inventory may be represented as shown in Figure 6 and it can be concluded that we will misrepresent the effects of perfectly represented alternative plans if all the flows and qualities indicated are not well documented as inputs and correctly mixed as outputs of the model. Urban water representations must include the man-made physical pipe and plant networks (including illicitly connected pipes), plus the water falling and flowing freely, almost glibly wherever it wishes, across the natural or altered land surface.

CATEGORIES OF USE

The historical review has indicated that models have been developed and used to analyze various parts of the urban water system and at several levels of time and space detail. The preponderance of model "users" has included the developers of the models--the programmers--but not the front-line, decision-making, operating water managers. So several categories of model use appear to exist.

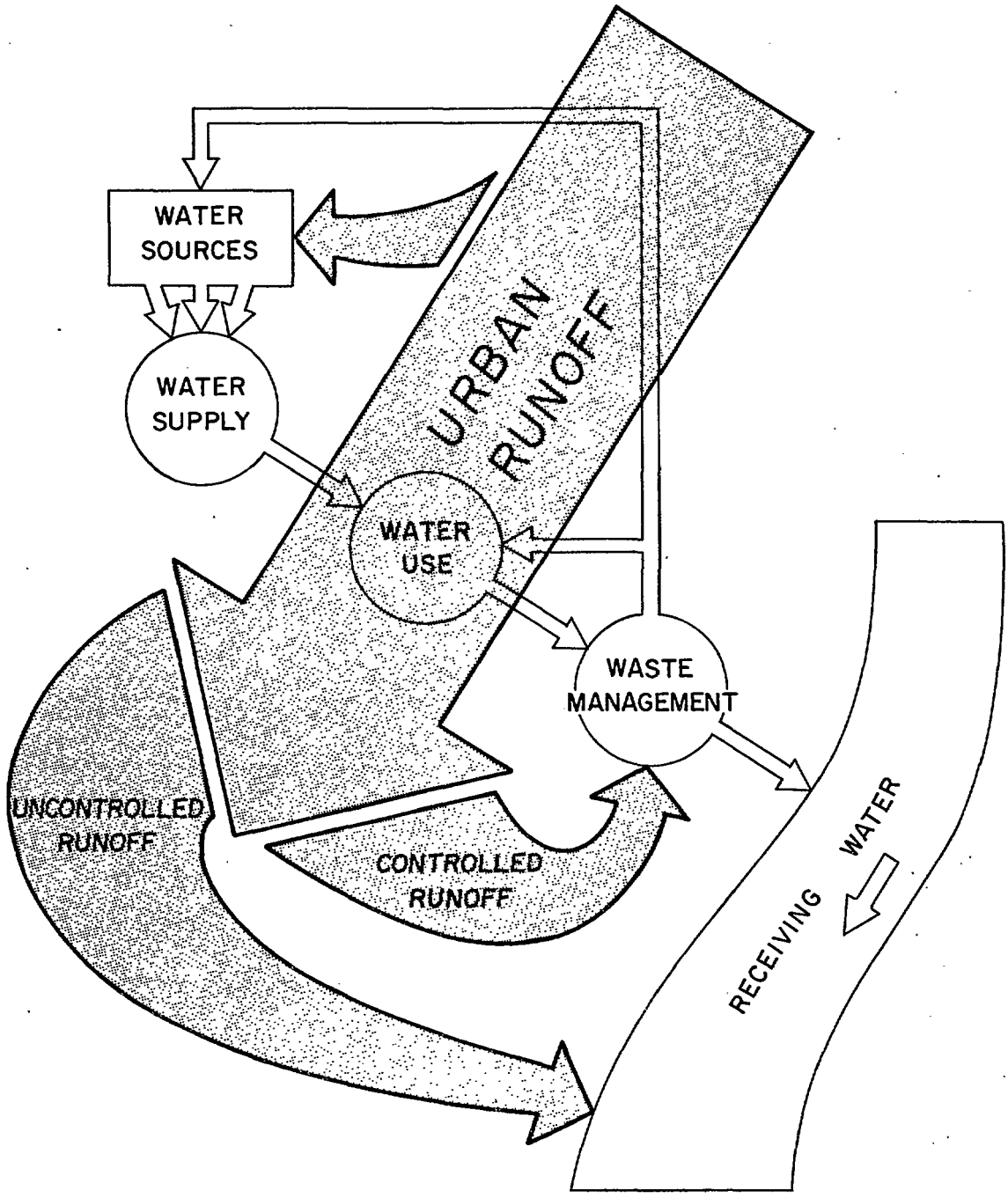

Figure 6 Simplified urban water resources schematic

The "Users" of Models

Researchers-model developers-scientists interested in simulation or optimization of various processes with the intent of better understanding the basic physics, chemistry, or economics of some water subsystem have apparently been the developers of most computer programs dealing with urban water. City engineers-urban planners-sewer maintenance personnel in municipal government positions with responsibility for planning, design, and operation of physical facilities have only recently become involved with models, and they have tended to hire the scientist-model developer to model the city's system (subsystem) for them.

Not so strangely perhaps, but unfortunately, the scientist, model developer has started from hydraulic and chemical first principles and simplified where numerically necessary to get available computers to approximate exact solutions, while for years the front-line manager has concerned himself more with the hydraulically or chemically complicated special cases he has encountered and has relegated the simpler parts of his problem to handbook, nomograph solutions. There has resulted a considerable amount of garbled communication and missed points between them. Interestingly, it has been the scientists, the purists, who have argued that the approximations are good enough, while the engineers, the pragmatists, have held that greater detail and more knowledge are required.

It is essential that model developers, whoever they are, cease claiming utility for their products until the utility has been demonstrated in a real situation. This will probably mean that models will be developed with a real use in mind, and the "user" should be identified as the person who gains practically applied assistance from the exercise. The "user" must be an urban facilities planning, design, or operations unit, and not its consultant. If the model developed has transferable utility for another urban area, that will have to be demonstrated before it is claimed; and the very safe bet is that some modifications will be required for every transference. A possible exception, and there may be some more, is a water distribution system analysis program; but even these encounter occasional situations that require further modification.

So programs developed for research or background purposes should be held suspect, and models used in one application for practical purposes should not be expected to be applicable straightaway in another use. The "user" of any model should identify clearly both himself and his purposes when reporting his model's results.

The Functions of Models

Table 1 shows the relatively entrenched hierarchies of urban water functions: planning, design, and operation, as well as examples of model applications that have been attempted in each case. The table is rather sparsely entered. What this means is that in terms of the traditional engineering sense of designing something and getting it built, models have not been much help. They have been rather extensively used at a planning level and on a single subsystem at a time (e.g. stream DO models, treatment plant sizing models, or STORM). The examples of applications to connected subsystems (e.g. sewers, treatment plants, and receiving waters) and to whole urban water systems are not very numerous. The Santa Ana Watershed Planning Agency's use of comprehensive urban water modeling [WRE, 1969] is the only example we know, and that work did not treat every subsystem possible.

Many of the historical model applications indicated in the table are documented in the state-of-the-art literature review presented in Section V. But the design and operation entries indicate the following applications that have been drawn in part from our own, sometimes unreported, experiences, and in part from the unpublished but significant contributions of others.

The design applications related to "river basins" have been flood control channel designs done for the Corps of Engineers. The Tennessee Valley Authority (TVA) and the Corps of Engineers have used certain models to answer design questions related to dam and reservoir spillway and outlet configurations. (Whether other models were or were not used for structural analyses, we do not know.) Additions to water distribution systems have been made based on computations with distribution system analysis programs. Sanitary sewer systems that have been "designed" with computer models have also subsequently been constructed.

In the operation phase it is known that TVA and the Bonneville Power Authority use models to predict operating schedules for their systems of rivers and reservoirs. Experience exists in Minneapolis, Seattle, and Cleveland with operation of storm and combined sewer systems by computer-aided means. Also certain isolated instances of computer-aided operation of waste treatment plants have been reported. The economics "models" shown in the operation phase are merely statistical processors of use data and billing schedules with which water and waste departments and many utilities prepare bills.

Table 1. FUNCTIONAL CATEGORIES OF MODEL USE

Function	River Basins	Storage Tanks or Reservoirs	Urban Hydrology-Runoff	Water Distribution	Storm, Combined, or Sanitary Sewers	Waste Treatment	Receiving Waters
PLANNING							
1) Subsystem Analyses							
a) Physics	x	x	x	x	x	x	x
b) Chemistry or Biology	x	x	x		x	x	x
c) Economics	x	x	x		x	x	x
2) Connected Subsystem Analyses							
a) Physics			o——	———	——o	———	——o
b) Chemistry or Biology			o——	———	——o	———	——o
c) Economics					o———	——o	
3) Urban Water System Analyses							
a) Physics	o——	———	——o——	——o——	———	——o——	——o
b) Chemistry or Biology	o——	———	——o——	——o——	———	——o——	——o
c) Economics	o——	———	——o——	——o——	———	——o——	——o
DESIGN							
1) Subsystem Analyses							
a) Physics	x	x		x	x		
b) Chemistry or Biology							
c) Economics							
2) Connected Subsystem Analyses							
a) Physics							
b) Chemistry or Biology							
c) Economics							
3) Urban Water System Analyses							
a) Physics							
b) Chemistry or Biology							
c) Economics							
OPERATION							
1) Subsystem Analyses							
a) Physics	x	x			x	x	
b) Chemistry or Biology							
c) Economics				x	x		
2) Connected Subsystem Analyses							
a) Physics							
b) Chemistry or Biology							
c) Economics							
3) Urban Water System Analyses							
a) Physics							
b) Chemistry or Biology							
c) Economics							

x = subsystems modeled alone

o—o = subsystems modeled as connected, interdependent entities

USER NEEDS OR PROGRAM OBJECTIVES

Given the historical perspective just reviewed and the computer programs that exist today to deal with urban water problems, the following list of questions that are now being asked could probably be answered with the aid of models that could be developed fairly easily.

1) What effects do our water supply sources, water treatment processes, and water use patterns have on our waste treatment and receiving water subsystems? --on reuse potential?

2) In addition to urban water data we are now collecting, what additional data should we be collecting to allow us to plan, design, and operate future facilities?

3) What are the magnitudes and relative magnitudes of industrial water use and waste discharge in our city, and what are the magnitudes of their effects on receiving waters?

4) How can we predict the effects of urban point source discharges on aquatic ecosystems this year, tomorrow, 30 years from now?

5) What are the magnitude, character, and origin of nonpoint sources of pollution in our city? How do they affect nearby receiving waters and downstream users both in the short term and in the long term? How can we control them if they are significant?

6) How can we or should we describe the chemistry and physics of urban runoff for planning, design, and operations purposes?

7) How much treatment and storage should we provide in our city for controlled runoff, currently uncontrolled runoff, or sanitary sewage--this year or ever?

8) How can we or should we predict rainfall in our urban area this year, today, next month, over the city, over subdivision C34? What is the planning "event", the design "event", a single operational "event"?

9) What combination of upstream watershed detention, on-line storage, or downstream off-line storage and/or treatment should we provide for storm flows in our city this year, next year, ever? Is the least expensive combination within our city limits a defensible answer? If it is, is it the best answer?

10) In what magnitude and how often can we expect flooding to occur in our city, study area, subdivision, downtown area?

11) How should we design and operate our combined sewers, given our topography and land uses, to minimize the deleterious effects of "first flush" pollutional loads following the onset of rainfall and sewered runoff?

12) Which treatment process should we install for our storm and combined sewer flows at outfall R-2, at outfall M-14, at existing treatment plant T-25?

Few if any of these questions, which are fairly basic and are being asked almost daily, can be answered adequately with currently existing models. But these are all questions pertaining to the storm and combined sewer portion of the urban water scene which SWMM and STORM were developed to address. With some amount of additional development and application, separate versions of those models could be made to address each of these questions. More extensive model development would be necessary to deal with a host of yet unasked questions that may be raised pertaining to water supply, water treatment, or water use. The writers are reluctant to suggest model developments in these other areas until honest-to-goodness "users" raise the questions to be answered. More academically contrived problems are hardly needed. Emphasis should stay on the questions already asked by front-line problem solvers who say they have certain problems now.

The user needs for additional urban water modeling appear to be, then, primarily in:

1) The planning realm;

2) The storm, combined, and sanitary sewer areas; and

3) The form of expansions to existing models required to encompass urban water subsystems most nearly connected to wastewater conveyance subsystems; namely, water use (dry weather flow generation), urban hydrology (quantity and quality of runoff over unsewered areas), waste treatment, reuse, and receiving streams.

In the design and operations areas the modeling needs appear to be specialized and again in the storm and combined sewer subsystem. A problem for design of combined sewers (which SWMM type models have highlighted) is the high pollutant loads flushed from sewers during early portions of storm runoff events. This phenomenon, known as "first flush", results when pollutant laden solids that have been deposited during dry weather are scoured from

paved surfaces and sewers and whooshed into receiving waters by the stormflow, which rapidly increases in both flow and velocity following the onset of rainfall. Although SWMM contains statements to represent this phenomenon, hydraulically more advanced versions of the model do not, and no model contains the ability to simulate various abatement measures. Improvements in this area are needed, since the first flush pollution loads are significant and since methods to control their particular load are neither mechanically trivial nor inexpensive. Yet first flush control emphasis appears to offer the most frugal answer to stormwater pollution abatement, since flows are lower than the peak and pollutant concentrations and masses are highest during that period.

An operations problem in the combined sewer subsystem to be addressed with models is, just that: operation. A few cities, notably Seattle, Minneapolis, Cleveland, and San Francisco, have attempted remote operation or are contemplating real-time automatic operational control of storm or combined sewers. In addition to hardware for actuation in response to telemetered signals for valves or other appurtenances, this will require software for predicting sewer system and/or storage and treatment plant behavior both hydraulically and pollutionally. Present systems respond only to hydraulics based on the premise that to minimize the quantity of overflow is also to minimize the pollutant load to receiving waters.

Several cities already have installed equipment for remote manual control whereby operators can monitor performance at various locations by telemetry and then signal back commands, based on certain operating rules, to valves, inflatable dams, gates, or other gear. This mode of operation is advanced and sophisticated in some respects, but control is nonetheless limited and in some particular situations too slow to effect optimal control of the water and the pollutants whose peak loads do not coincide.

Of particular note to the writers in this discussion of program objectives and user needs is a haunting concept from the past, which the writers conjured in 1968, and which apparently should now be put to final rest. Figure 7, which several authors have reproduced to make a similar point, attempts to show that planning models are long-period, large scale models, while design and operations models are short-period, small scale, highly detailed models. This concept is so general that it appears to have more exceptions than proofs of the rule. For example, simulation models are formulated to operate in either steady-state or dynamic mode. In steady-state mode, time steps are not relevant or at least they are not explicitly set. In dynamic hydraulic models, stability of several sorts requires that computational time steps be roughly equivalent to travel times, which may be as short as 10 seconds. Dynamic quality models use time steps short enough to allow simulation of events that occur diurnally

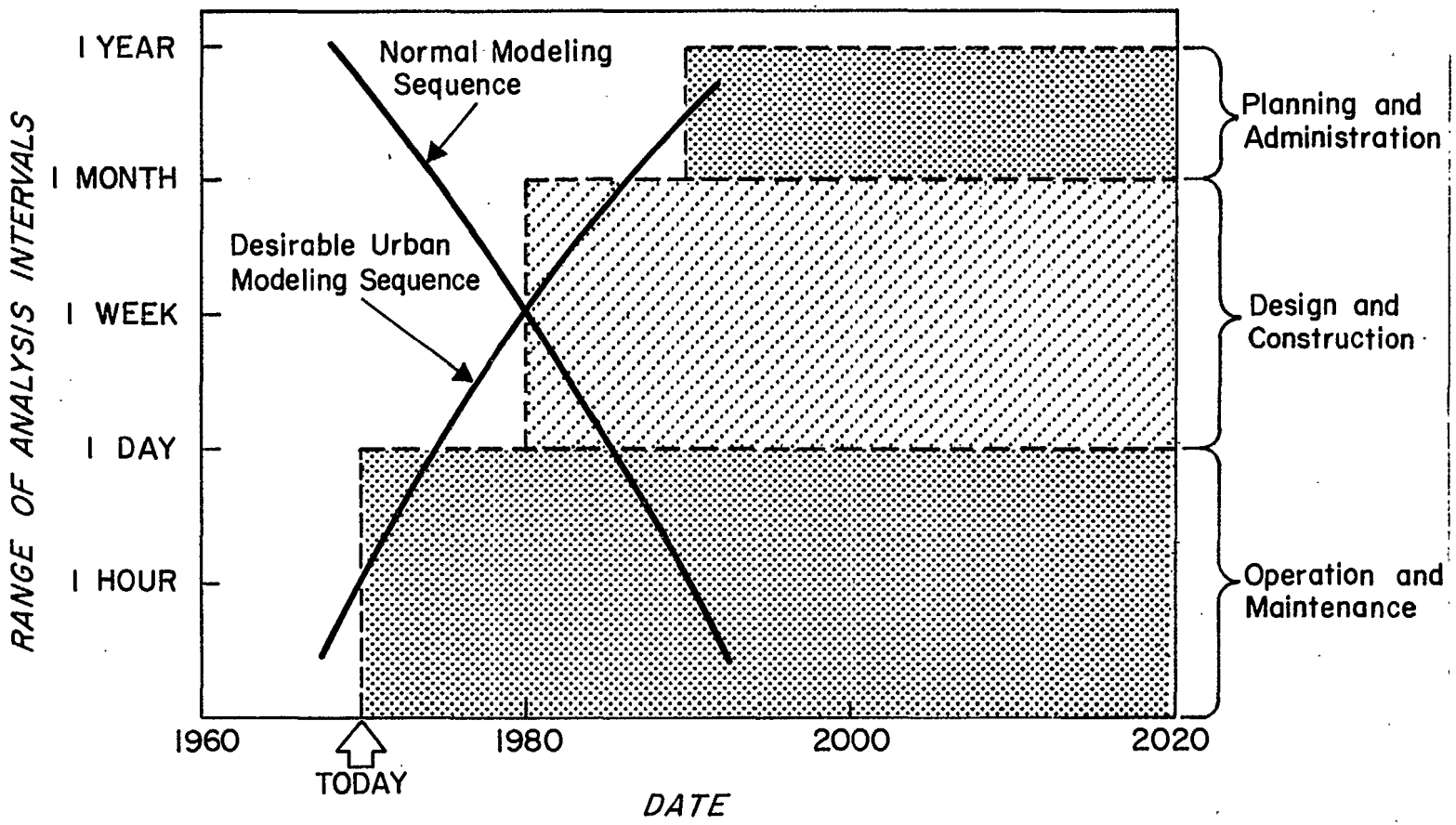

Figure 7 Stages of development and levels of detail to be encountered in systems analysis of the urban water resources system

or hourly, while they are often made as long as possible to save computer time. These quality models are usually operated with hydraulic input data that have been averaged in an hydraulic model over a number of hydraulic time steps equal to one quality model time step.

The point of this is that the time and space scales used have little or no relationship to the planning, design, or operational functions being performed. In our own experience, estuary models and SWMM have been used for planning with 30-second time steps, STORM has been used for planning with 1-hour time steps (but no length or space scale for the sewer transport system); groundwater models have been used for planning with 1-year time steps; and design has been performed with steady-state models of several sorts and with dynamic models with time steps of 30 seconds to 1 month. Link sizes have varied from several hundred feet to many miles.

It is the general rule that planning can be performed for longer periods of real future time and over larger areas than for design or operation. But these large geographic scales and long "planning horizons" are really not germane to the way in which the physics or chemistry of the plan elements are represented in mathematical models. A model that is sorely needed, whose characteristics will typify the quandary of long period planning and short model cycles, is a 30-year planning model for receiving waters that will properly estimate ecological effects of increased, decreased, or transient waste discharge conditions. We all know that phytoplankton, which form a basic element of trophic level successions, function on a diurnal cycle of sunlight and dark periods. It remains to be determined whether an averaged seasonal or even annual model of the phenomenon can be constructed so that very long periods of time can be modeled for planning purposes without modeling, say, 30 years in 30-minute time steps. As expensive as that sounds in terms of computer time, however, it is also true that computers are becoming less expensive to use and their cost is becoming a smaller portion of the total planning cost. So if the short time step, long duration simulation cannot be avoided, it should <u>not</u> be decided straightaway that such planning analysis is infeasible.

SECTION V

STATE-OF-THE-ART

This chapter is primarily comprised of a review of literature on modeling of urban water subsystems reported since 1968. This date was picked because WRE [1968] reported a review of literature on the same subject in that year, which covered the previous literature.

The last portion of this chapter summarizes the developmental work still underway by various investigators and potential model users who were contacted during the course of this investigation.

The literature reviews are presented by urban water subsystem for each category.

RAINFALL/RUNOFF/SNOWMELT

Rainfall

Little literature was found that reported models of precipitation, particularly computer models of storm events on a scale that would be relevant to urban areas. Raudkivi and Lawgun [1970] developed a model that generates times between storms by sampling frequency distributions. Storm duration is based on a Markov model and a frequency distribution, and storm precipitation is based on a joint frequency distribution with duration. These same authors [Raudkivi and Lawgun, 1972] subsequently refined their model for generating storm durations. Their model was developed and calibrated based on data for Auckland, New Zealand.

Duckstein, et al. [1972] have also developed a probabilistic model for summer event rainfalls. Their model samples from a Poisson distribution to generate a number of events and from either a geometric or a negative binomial distribution to generate either point or regional rainfall amounts. The model does not consider the temporal spacing of the storms. None of the above papers considers the temporal or spatial distributions of rainfall within a particular

event. Other authors, notably Huff [February 1970; April 1970], have presented data on this subject but do not develop rainfall generation models.

A fairly recent report by Gregg, Labadie, and Wenzel [1974] concluded that a major obstacle to automatic real-time control of stormwater facilities is the lack of a dependable, short-term rainfall forecasting model. Subsequent work by Trotta [1975] has centered on stochastic prediction of runoff, skipping rainfall prediction, in part because it is difficult to do, and his results indicate that this may be adequate. The point should be proved in several locations.

Runoff

Given information on precipitation and snowmelt in a particular urban basin, an obvious concern is with describing the nature of the runoff that will result. Models that characterize this transformation have been recently reviewed by Linsley [1971], Brandstetter [1975], Papadakis and Preul [1973], Heeps and Mein [1974], and McPherson [1975]. Thus a detailed review is unnecessary here.

It is helpful, however, to recognize three different types of potential concerns in characterizing basin runoff from a storm event: 1) the total volume of runoff, 2) the maximum rate of runoff at a downstream point, and 3) the temporal distribution of runoff. Any particular model may be oriented toward accomplishing one or more of these characterizations.

Considering the total volume of a storm's runoff, Miller and Viessman [1972] presented two simple, empirical relationships. When the total rainfall was less than 1.5 inches, pervious areas were assumed not to contribute, and total runoff from impervious areas was computed as a linear function of the rainfall. For total rainfall of more than approximately 1.5 inches a Soil Conservation Service method was suggested for determining total runoff. In another study, Viessman, Keating and Srinivasa [1970] used three alternative means for estimating the portion of rainfall that runs off: 1) the ϕ index characterization of infiltration, 2) 0.15 inches of initial abstractions together with the ϕ index, and 3) 0.10 inches of initial abstractions together with an exponential loss function.

Other more sophisticated and comprehensive models use slightly more involved representations, at least of infiltration. Horton's, Holtan's, and Philip's infiltration equations are three that are commonly used to represent infiltration through urban pervious surfaces.

Mein and Larson [1973] have recently presented an infiltration model that depends entirely on measurable soil parameters. Although

this new model has been experimentally and numerically verified, it has not yet been incorporated into models of either rural or urban runoff events. Of course, after any method has been used to estimate initial abstractions and total event infiltration, the total storm runoff is easily determined by subtracting these total losses from the total rainfall.

Characterizing a runoff event with the peak flow rate has most frequently been accomplished with the rational "formula" (Q = CIA). DaCosta [1970] has explored the use of this equation for estimating the effect of urbanization on peak flows. Others (see Linsley's 1971 review) have concentrated on frequency analysis in studying runoff peaks; however, this data-intensive approach has the main weakness of not indicating changes due to urbanization. Thus, most characterizations of peak flows are obtained in the context of more comprehensive representations of the temporal distribution of runoff. The estimation of the total storm hydrograph has been accomplished by two primary methods: 1) hydrograph synthesis based on empirical, "black-box" watershed response analyzers, or 2) use of a comprehensive, deterministic, cause-effect model of the rainfall-runoff process.

Linear hydrograph theory [Brater and Sherrill, 1975] is the simplest example of "black-box" hydrograph synthesis. More sophisticated approaches recently reported include the nonlinear approaches of Bidwell [1971] and of Amorocho and Brandstetter [1971], the time varying approach of Mandeville and O'Donnell [1973], and the nonlinear, time varying approach of Chiu and Huang [1970]. Since these approaches require calibration with data from the basin being represented, it is difficult to use them for predicting the effects of particular water resources control projects in a "new" basin.

Comprehensive, deterministic, cause-effect models in the form of computer programs are, therefore, the most common and interesting type of model currently being used. The most widely known of these models include the Hydrocomp Simulation Program (HSP) [Linsley, 1971], and EPA's Storm Water Management Model (SWMM) [Metcalf and Eddy, Inc., et al., 1971; Chen and Shubinski, 1971; and Lager, Shubinski, and Russell, 1971]. The five previously cited reviews describe others. The most recently presented models are Chicago's Flow Simulation System [Lanyon and Jackson, 1974]; the Linearized Subhydrograph Method [Chien and Saigal, 1974]; a partial area technique [Engman and Rogowski, 1974]; STORM, a coarse Storage, Treatment, Overflow, and Runoff Model developed by WRE [Roesner et al., 1974] and documented by the U.S. Army Corps of Engineers [1973]; and the San Francisco Stormwater Model [Kibler, Monser, and Roesner, 1975]. Each such model incorporates significant differences in approach from the others, thus the previously cited reviews probably provide the best (though usually biased) first

step in assessing the model's applicabilities to particular problems. It is significant that in some cases, differences among the results produced by the models may be due more to the relative accuracy of input data or model parameters than to the relative fidelity of their respective methods for representing the rainfall-runoff process [Papadakis and Preul, 1973].

Snowmelt

A few of the comprehensive models for computing runoff include capabilities for computing runoff contributions due to snow accumulation and melting. Brandstetter [1975] indicates four such models, including the Hydrocomp Simulation Program, STORM, and the Chicago Flow Simulation System. The respective methods used are a Corps of Engineers snowmelt prediction procedure, the degree-day method, and a Bureau of Reclamation method based on precipitation and daily averages of air temperatures and wind velocity. In general, however, modeling of snowmelt has been postponed while more concerted attention is devoted to more generally occurring phenomena. Some field studies of snowmelt have been conducted [Dunne and Black, 1971], but mathematical models were not synthesized.

Quality

Models that characterize the quality of urban runoff are less well developed than those for water quantity. Early relationships were simple graphical correlations of concentrations and flow rates. This approach was then extended by Cleveland, Reid, and Harp [1970], Cleveland, et al. [1970], and AVCO Economic Systems [1970] who present several linear regressions, mostly between land use variables and impurity concentrations. However, the regression approach has been largely unsuccessful, because 1) a large amount of data is required, 2) poor quality data were gathered, and 3) transferability of such relationships has not been documented conclusively. A recent study employing regression analysis for urban pollutant loads was reported by Colston [1974]. The equations derived had high coefficients of correlation for a Durham, North Carolina, data set. But no indication of transferability to other cities was given.

A basically different type of model has been suggested as part of the EPA SWMM package by Metcalf and Eddy, Inc. et al. [1971] based on a simple linear, first-order differential equation with a coefficient proportional to water discharge. This type of representation has subsequently been used and improved in other models by such workers as Preul and Papadakis [1970] and by Sartor and Boyd [1972]. Huff and Kruger [1970] have used a similar representation of rural water quality in association with the Stanford Watershed Model.

Without question urban runoff quality modeling still needs refinement. Nearly every applier of SWMM has questioned the transferability of the surface pollutant loading factors. Recent testing by Colston [1974] indicated that these factors are indeed not transferable. See the discussion below on Urban Watershed Management for details of this particular art's status.

URBAN WATERSHED MANAGEMENT

Since 1971 the SWMM model [EPA, 1971] has contained provision for estimating the quality of urban runoff (BOD, suspended solids, and coliforms). The contributing sources of pollutants that are considered include wash-off of accumulated dust and dirt on the watershed and accumulated pollutants in catchbasins. The relationships included in the model were derived from data collected in Chicago [APWA, 1969] and Cincinnati [Wiebel, et al., 1964], and these were tested against data from San Francisco [Engineering Science, Inc. 1967]. Verification, as might have been expected, was not completely satisfactory; although discrepancies could be explained, and caveats about the insufficiency of data and the incomplete accounting for all sources of urban runoff pollution were given in the SWMM report [EPA, 1971].

In 1975 an updated version of SWMM was reported [Huber, et al., 1975]. It now includes COD, settleable solids, nitrogen, phosphate, and grease in addition to BOD, suspended solids, and coliforms. All of these have been related by mg/gram linkages to accumulated dust and dirt. Also a comprehensive but yet unverified addition of the Universal Soil Loss Equation was made [Huber, et al., 1975] to estimate soil erosion, principally from construction sites. Another model using the Universal Soil Loss Equation has been reported by C.N. Chen [1975]. Heinemann and Piest [1975] reviewed the current (circa 1972) research on soil erosion, sediment yield, and modeling of these phenomena; but they reported no applications in predominantly urban watersheds. The state-of-the-art here is clearly directed to areas of predominantly open lands of erodible soils, and definitely not to paved or roofed areas that accumulate artificially introduced loose materials.

WATER SUPPLY

Some major cities, such as Philadelphia, withdraw water supplies at their door. As a result, their simulation scale covers entire tributary river basins, and they are merely one among several parties involved. Alternatively, cities like New York and Denver have gone long distances to develop supplies exclusively for their own urban needs. Yet again, satisfaction of both urban and agricultural needs are addressed in such statewide supply programs as in Texas and California. A still larger multi-state example of multiple need planning is the Northeast Water Supply study by the Corps of Engineers. Thus, water supply modeling has ranged from planning multiple river basin impoundment systems to drought analyses of mainstem flows.

Operation models are frequently concerned only with existing facilities; design models deal with facilities to build in the near future; and planning models consider several future stages of development. An excellent example of an operations model was presented by Joeres, Liebman, and Revelle [1971]. They used linear programming and simulated streamflows to explore conjuctive operation of Baltimore's gravity flow reservoirs and a large-scale pumped source. They demonstrated substantial savings by using a linear decision rule although there was no indication that this type of rule is optimal. Deininger [1970] also considered optimal operation, in this case operation of an existing well field. Two formulations were presented, one that maximized yield (linear programming), and another that minimized costs for a given yield (quadratic programming). Other examples could undoubtedly be found, since operations studies typically consider well-defined systems and are thus most easily subjected to mathematical programming formulations.

Design models in water supply are more likely to be used for selecting and sizing new facilities in single stages of development. Deininger [1970] also presented such an example where several potential sources of surface water and their costs were being considered. Linear programming was used to minimize costs while obtaining a required supply. Weddle, et al. [1970] also suggested a linear programming formulation; however, they used a network analogy formulated with integer variables. Rather than considering a group of potential surface water reservoirs, they illustrated the technique relative to surface water supply, desalination, conventional water treatment, and reuse. Bishop, et al. [1971] presented a similar formulation. This approach is applicable for optimizing the development of any potential configuration of treatment and water transport facilities as long as the overall size of the problem remains tractable and as long as adequate unit cost data for treatment and transport are available. Weddle, et al. [1970] indicated an iterative application of the optimization technique to allow for nonlinearities in the cost (versus capacity) functions. Additional examples of one-shot facilities development are available; optimization techniques are ideal for their solution, provided suitable cost data are available and an applicable, scalar objective function can be defined.

Exercises in water supply planning must generally consider multiple stages of development, a factor that may severely complicate both the models used and the decision making that occurs. However, when a projected demand is to be met and when the sizes of various facilities are predetermined, appropriate timing and sequencing is relatively simple to discover. For example, Hoppel and Viessman [1972] considered seven possible well fields developed to sustained yield, their associated pumping and pipeline costs, and the possibility

of recharging one field. Linear programming was used to determine optimal delivery from each well field at various demand levels and thus identified the sequence of development. Deininger [1970] used a similar approach in a surface water sources example.

A more complex situation exists when sizing has not been prescribed. Scarato [1969] presented a general procedure for determining optimal sizes and timing of water treatment expansions based on 1) linearly increasing demand, 2) constant economies of scale, 3) a constant discount rate, 4) the requirement that all demands be satisfied, and 5) an infinite planning horizon. Singh and Lonnquist [1972] have relaxed some of these assumptions and then explored the sensitivity, due to various factors, of monetary savings from optimal stagings. Savings appear to be most sensitive to the rate of growth of demand and the discount rate but are also affected by the efficiency with which capacity expansion can be made, the initial water demand, and the plant's useful life. Hinomoto [1972] formulated this same problem with dynamic programming, concluding that two important factors are the maximum daily demand and the fire-fighting demand, both of which he satisfied with booster pumping rather than overall increased capacity. Riordan [April 1971; June 1971] also extended Scarato's work by relaxing the requirements that water demands be met. He used dynamic programming to incorporate the price sensitivity of water demand in finding optimal investment (staging) and pricing decisions in water supply. He concluded that severe assumptions had been made and that a 10-20 percent increase in net benefits might result from applying the method. However he also concluded that the empirical data needed are not currently available.

Becker and Yeh [1974] considered jointly the staging and sizing of water supply development. They used dynamic programming, together with an emphasis that a reservoir's benefits depend on its contribution to overall firm yield, which in turn depends on the reservoirs that are already available in other basin developments. A similar problem was formulated by Mulvihill and Dracup [1974] who used nonlinear programming.

By far the most complex considerations of water supply involve a joint consideration of operating rules, facility sizing, and staging of developments. Blood, Clyde, and Peterson [1971] considered least cost means for conjunctive development and operation of a freshwater source and desalination to meet a given, long-term demand function. They 1) established the ultimate demand, 2) estimated the desalting plant capacity needed to meet it, 3) found appropriate operating rules for that plant and a sample hydrology, 4) repeated this operations analysis for several other potential plant sizes, 5) selected the optimal ultimate plant size, and 6) explored various staging strategies to select the minimum cost overall plan for development. Clearly their trial and error approach and selection from only a few itemized alternatives, lacks the power of optimization by mathematical programming, but it does result in a joint consideration of all three significant aspects.

Previously, Evenson and Moseley [1970] reported joint consideration of water supply operation, facility choice and sizing, and program staging through an iterative application of mathematical programming techniques and simulation models. Their analysis was oriented to the Texas Water System and, for a sample problem, involved planning for a system of 18 reservoirs and 42 canals over a 36 month period. The size of this problem required development of screening procedures to eliminate less attractive alternatives; however, mathematical programming was used extensively in the screening process. Although this approach has been improved and extended [Texas Water Development Board, 1971; Montgomery-WRE, 1974], much additional work remains to develop generally useful methods for jointly considering operation, facility selection, sizing, sequencing, and timing of water resources developments, especially with the complexity involved in planning for urban regions. It might be noted that water quality in large scale transfer schemes has not been simulated, much less optimized, at all.

WATER DISTRIBUTION SYSTEMS

Introduction

Included in a distribution system are all water works components for the delivery to users of finished or potable water by means of gravity storage or pumps through conveyance piping networks, together with distribution equalizing storage.

Water distribution systems are typically divided into interconnected service districts according to delivery pressure requirements, which are related to topography, in a manner roughly analogous to urban drainage catchments. Planning/analysis/design and operational control are usually approached on a district-by-district basis.

Planning/Analysis/Design

Very rarely is there an opportunity to design a total distribution system. Typically, planning/analysis/design is concerned with the extension and improvement of existing systems. Because system enlargement is usually piecemeal, algorithms for wholesale deployment of network piping or optimal allocation of water have found limited application. More useful is the extensive theoretical attention given optimization of network branches for planning extensions or reinforcements to distribution systems, such as by Jacoby [1969], including least-cost analysis with linear or dynamic programming.

Considerable advances have been made in simulation techniques for planning/analysis/design. Some of the larger water works have developed their own computer programs [Brock, 1970]. A comprehensive computer program [Epp, et al., 1970], available on request, has been adapted for use in several large and medium sized systems. The various mathematical simulation techniques for system balancing have been reviewed in detail [Shamir, 1973], and their different characteristics have subsequently been summarized [Shamir, 1974]. Even topologic properties of networks have received mathematical attention [Enger and Feng, 1971]. "In sum, literally dozens of technical papers have been published over the last few years dealing with mathematical aspects of distribution system simulation, seemingly approaching a point of saturation. In fact, although shortcomings still exist in available analytic tools, techniques and data processing methods have developed to a level of sophistication that is often well above that of the input basic data" [AWWA, June 1974].

Automatic Operational Control

The trend toward automation in water treatment, transmission and distribution is strong and rising [Radziul, 1971]. Literally hundreds

of water works, including the smaller ones, have some degree of distribution system automatic operational control capability, although this includes only monitoring in most instances. In the most advanced cases [Van Dyke, 1970; Frenz, 1971; Juknievich and Richardson, 1973; Brock, 1973], all pumping and pressure-regulating functions, but not the piping network, are under computer-directed control. The critical, but incompletely developed, element for using a computer as a full-fledged surrogate for the control system's human supervisor is the required control logic or software. Suitable hardware is available. Although water works lead the urban water resources field in automation [McPherson, 1971], complete distribution system automation is still a long way off [McPherson, June 1973].

Required control logic includes capabilities for determination of the piezometric surface, recognition and definition of any off-normal conditions inferred thereby, resolution of applicable best service and least cost criteria to be met, actuation of field regulation devices for satisfaction of those criteria, and confirmation of success of actuation. As opposed to "normal" operation that involves the satisfaction of service demand variations that recur in a more or less similar daily pattern almost all year long, "off-normal" operation refers to unusual, infrequent, sometimes catastrophic, occurrences such a major fires, main breaks, power outages, and other facilities failures. Costs for normal operation can be reduced by using automation to allocate source inputs and prescribe pumping station schedules more efficiently. Among the approaches under consideration in control logic development is simultaneous network simulation-fitting and option-testing [Brock, 1963], whereas another calls for the sequencing of these steps [Gilman, et al., 1973].

Because people not familiar with the problem are prone to regard control computations merely as extensions of the network balancing process, it is important to note the important differentiation between them. Geohydrologists have recognized this fundamental difference in groundwater computations [Emsellem and Demarsily, 1971], where aquifer hydraulic capacity characteristics must be deduced from the performance of a limited number of test wells (the operations equivalent), as opposed to water table mapping where all parameters are known or can be specified (the planning/analysis/design equivalent).

For network planning/analysis/design, because adequacy of field pressures is the central service criterion, the computational objective is to define the piezometric surface (or field) of the network. Because nonlinear terms exist in the energy relations involved, a direct solution of equations is not presently achievable and a near-solution or "network balance" is determined instead by means of iterative, successive approximation techniques. The equations involved describe continuity of mass (flows at each node) and continuity of energy (pressure attrition between each pair of nodes). That is, flows external to those

within the network branches are givens, and determination of the piezometric surface is the objective. Fixed piezometric heads can be admitted, such as storage water levels. A near-solution is possible simply because, and only because, as many equations are involved as there are unknowns, a condition made possible by creating an identity of number of unknowns and number of equations, the result being a snapshot definition of the system's piezometric surface for the instant of system operation simulated. An identity status is accomplished through employment of certain approximations and simplifying assumptions, the collective validity of which is indirectly reflected by the proximity of simulation results to observed prototype performance. (Uniqueness of "solution" can be obtained for nearly all mathematical techniques now in use.)

In striking contrast, the operating mode has precisely the opposite requirements: with a measure of the piezometric surface given, what are the flow conditions in the network? "A measure of" the piezometric surface is an appropriate phrase because economic reality requires that only a limited number of pressure sensors can be installed in any service district, perhaps at no more than about a tenth to a fifth of the major network nodes, and therefore it is feasible only to sample the piezometric surface. Furthermore, most flows external to those within the network are usually unknowns, not givens, and the sum result is that the total number of unknowns greatly exceeds the number of "equations" available.

Status of Automatic Operational Control Capability

Maximization of service (flows) and minimization of operating costs are the basic objectives in automatic operational control. Research on control capability has centered in three projects. The first [McPherson and Prasad, 1966; McPherson and Heidari, 1966], supported by the U. S. Public Health Service, demonstrated among other things that the hour-by-hour operation of simple pumped-input systems with a single station sendout and a single equalizing storage site can be continuously simulated for a full year of demands. The second [Gilman, et al., 1973], supported by OWRR, explored field-sensor tracking, system performance simulation, demand projections, and control criteria. The third project [Rao, et al., 1974] also supported by OWRR, now the Office of Water Research and Technology (OWRT), will continue through 1975.

The basic tasks involved in achieving full, hands-off automatic control are as follows [Rao and Bree, 1975]:

1) Network simulation sufficiently rapid to keep pace with changing field conditions, over time intervals as short as a quarter of an hour.

2) Reduced hydraulically-equivalent networks, for use in state estimation and prediction.

3) Load forecasting.

4) Optimization of pump selection.

5) Real-time estimation of system behavior, or system state, based on telemetered information.

6) Sensitivity analyses of system response to control tactics and strategies.

7) Integration of the above six items into a compatible total capability.

Of the seven items, only the first has received adequate investigation. While the others have all been studied [Gilman, et al, 1973; Rao and Bree, 1975; Bree, 1974], considerably more work could be and should be done.

Transferability of Results

The 1975 follow-on to the most recent work [Rao and Bree, 1975] will quite likely carry the overall complete automatic operational control concept about as far as it can be taken and still yield national transferability of findings. However, eminently transferable would be additional work on the first four items listed above. Still, the work on items 3 through 6 should be regarded as only partially transferable, because conditions of actual water works districts have been used in their historical development, and additional work would be required to adapt the findings to other water works.

Because the best planning, analysis, and design include simulation of system performance to demonstrate the virtues and flexibility of expected operating improvements, advances in automatic control capability will accordingly yield spillover benefits to these other functions.

There is general agreement that the central requirement for full national transferability of a total software package for complete automatic control would be the characterization of the hydraulic behavior of distribution systems in general terms--the development of a universal transfer function, as it were. Although a preliminary generalization for relatively simple systems has been made by means of an empirical network representation [McPherson, 1961], which was later extended [Wiseman and McPherson, 1965], and in which a range of general pump and storage characteristics were incorporated

[McPherson, 1966; McPherson and Prasad, November 1966], the absence of suitable applied mathematical tools for direct solution of application equations precludes much further generalization.

Work on load forecasting, item 3 above, would contribute toward a better understanding of short-term distribution system demand variations, a priority research need identified by AWWA [September 1974]. Techniques for analyzing seasonal demand variations [Salas-La Cruz and Yevjevich, 1972; Gracie, 1966] also deserve greater study.

A hierarchical approach for automatic control of combined sewer overflow pollution has been advocated, with slave minicomputer surveillance of individual catchments and master overview of the total jurisdiction by a central computer [Wenzel and Bradford, 1974]. This is the current "building-block approach to automation" in vogue in manufacturing [Anon., 1973], and may be appropriate for distribution system control, especially for service districts vis-a-vis an entire water works.

While use of statistical tools has a tendency to obscure the working nature of physical processes, some of the newer cybernetic developments deserve watching. Progress has been made in manufacturing process-control where the computer programs describing a process are internally adjusted as information from process sensors accumulates, in a "self-learning" or "self-programming" mode, because "many of today's processes are so incredibly complex as to defy reasoning from first principles [Anon., 1974].

Lastly, as a stress-reduction tactic, it has been suggested that automation of distribution systems could be used to restrict peak demands when a system cannot meet them [AWWA, September 1974], obviating investment in extra facilities for satisfaction of infrequent, extreme loads.

WATER USE

To the writers' knowledge, the urban water use subsystem has never been rigorously simulated, in a cause-and-effect sense. The most elaborate model constructed appears to be MAIN-II, developed by Hittman Associates [1969]. This model either accepts projections or makes its own for "independent" variables such as population density, values of dwelling units, and numbers of dwelling units in each value range. Including residential, commercial-institutional, industrial, and public-unaccounted sectors of the community, 150 separate water use categories can be projected.

WRE [March 1969] and Montgomery-WRE [1974] have developed similar but less ambitious "Data Management Systems" that calculate

annual demands through time for several categories of urban and rural water users. These models use population or land use in each water user category, multiplied by appropriate unit factors, to arrive at water demands. Waste flow projections are derived similarly. Unit factors for increases in quality constituent concentrations can also be incorporated to calculate waste qualities.

Several authors have suggested other approaches for projecting municipal and industrial water use. Whitford [1972] focused on per capita residential water demand by projecting the trend in this variable and incorporating various subjective adjustments to obtain a probabilistic characterization of per capita demand which had a standard deviation of approximately 10 percent. Burke [1970] used multiple linear regression and the U.S. Public Health Service inventory data on U.S. water supplies to project total demand for any city. Schaake and Major [1972] reported water use projections in the North Atlantic Region relating water usage with population served and per capita income for municipal use, population and per capita uses for rural use, and input-output table technical coefficients for industrial uses. All of the approaches to water use projection mentioned above, however, depend on prior projections of independent variables, for example, population, per capita income, or water pricing policy. As such, they are all computerizations of effects and their trends, rather than models of water demand causes that simulate resultant effects.

Other authors have considered other types of water use, primarily recreational use. McCuen [1973] suggested a sequential decision approach for estimating recreational visitor-days for prospective facilities, an approach which incorporated information on the use of currently available facilities, empirical equations calibrated to describe usage in other locations, and market survey. Dietz [1973] postulated access as the principal limitation to boater use of Lake Michigan and developed a model to predict the need for refuge and transient facilities at various lakeshore locations if access were improved in the Chicago area.

Andrews and Weyrick [1973] assumed the scarcity of water and studied water allocations by linear programming under alternative objective functions to indicate most plausible potential future uses.

The water use subsystem is the most critical of all urban water subsystems, because it sets the quantity and quality demands for all upstream subsystems, plus it is the source of the quantity and quality loads imposed on all subsystems downstream. But historically it has not been within the jurisdiction of the engineer to control (limit) the water use subsystem; thus there has been no apparent incentive to describe it mathematically. Hence, there are no cause and effect models of actual usage of water (much less quality deterioration) in industries, parks, or single-family or mutliple family homes.

Tihansky [1974] and Sonnen [1973] have each developed some quality-use-consumer cost programs that calculate the added costs to home-owners or industries of excessive hardness or TDS in their supplies, but these accept demands as given and do not account for any diminution in projected unit demands if quality deteriorates or increases in use if quality is improved. In short, much more work could be done in simulation and economic modeling analysis of urban water use.

COLLECTION AND CONVEYANCE

Models dealing with pipe systems for collection and conveyance of storm and combined sewer flows can be divided into four distinct categories: performance analysis, control, design, and planning.

Analysis models describe the performance of a given collection and conveyance system under given inflow conditions. Model output is usually in terms of flow rates, and possibly in terms of impurity concentrations over time at various points including at the system outfall. Brandstetter [1975] has conducted a comprehensive review of the more sophisticated of these models, and hence such a review will not be repeated here. However, the initially developed hydraulic transport routine for EPA's SWMM model [1971] is typical. Depending on the level of resolution needed to represent temporal variables and the pipe network, relatively coarse to highly sophisticated analytical models are available. SWMM is one of the more sophisticated (and expensive) of these models.

Computed descriptions of hydrographs and pollutographs are not the ends in themselves. To be helpful these results must aid identification and solution of operation, design, and planning problems. Of the currently available analytical models, few have been applied to the operational control of drainage systems. Indeed, the Battelle model [Brandstetter, et al., 1973] is the only one integrated with a computation procedure for making real-time control decisions. A less sophisticated model [Minneapolis-St. Paul Sanitary District, 1971] was developed for the expressed purpose of real-time control; however, it provided only an analysis of the results (hydrographs) of trial control decisions and was discarded as inefficient. Rapid prediction or even automatic decision making are the most important criteria for models used in operation. In Seattle [Gibbs, et al., 1972], operating decisions are made automatically with rule curves and real-time data without use of explicitly predicted effects on the system. (The rule curves presumably reflect predictable responses.)

There is also a noticeable disparity between the availability of analytical models and their use in design, especially since the level of resolution incorporated by most models is suitable for design purposes. Heaney, et al., [1973] have added a modest design capability to SWMM:

The program checks for surcharges; and, if it is found, the pipe diameter is increased by a standard increment retaining the originally given slope and network configuration. From Brandstetter's review [1975], five other models apparently have similar capabilities thus allowing consideration of the dynamics of flow when sizing pipes. No variation of network configuration or pipe slopes for design analysis appears to have been accomplished, except possibly through trial and error applications of the above mentioned models. No article was found reporting the use of such a model in solving an actual design problem that led to construction.

Design problems have also been approached with models that adopt the steady-state "design flow" concept, which obviously makes them more applicable to sanitary sewers than to storm sewers. Mathematical programming techniques have been used to discover optimal sizes, slopes, and--in rare cases--configurations of drainage networks. Walsh and Brown [1973] and Merritt and Bogan [1973] have developed slightly different dynamic programming formulations for determining optimal pipe sizes and depths (and thus slopes) for a given design flow and network configuration. Their approaches appear extremely promising. Dajani, et al., [1972] and Dajani and Hasit [1973] explored linear programming to accomplish the same purpose. Initial assumptions of full flow in the pipes and a continuous (rather than discrete) range of sewer diameters were unfortunate and led to a separable convex mixed integer formulation that required excessive computer time. A two-step sequence for solving the problem was finally recommended which first assumes full flow of pipes and then uses this initial solution in the time consuming algorithm.

Fisher, et al. [1971] presented an integer programming formulation for the diameter-slope problem. The example they considered was an interceptor in the Chicago area, a significantly larger sewer than other optimization studies have typically considered. In spite of finding a 10 percent cost savings over a traditional design method, the authors concluded that uncertainties in excavation costs, the dynamic nature of actual flows, and the arbitrary nature of velocity constraints detract considerably from the significance of the indicated saving. Argaman, et al. [1973] have also used programming techniques for sewer design, but they have considered optimal network configuration as well as pipe sizes and slopes. They found their dynamic programming approach to require amounts of computer time that severely limit the size of the sewer network that can be considered. The development of programming techniques for sewer design is relatively recent, and their application to real problems has not been documented. However, it appears that Walsh is actively implementing his approach [Walsh and Brown, 1973].

By far the most neglected category of collection and conveyance modeling is planning. Chen and Saxton [1973] have reported a planning level study in which triangular hydrographs and runoff volumes proportional to rainfall have been used with storm frequency data to develop

curves showing 1) the number, duration, and volume of overflows for Spokane, Washington given intercepting capacity, and 2) the capacities of storage or treatment facilities required to reduce or mitigate Spokane's overflows. Unfortunately, the resulting curves are location specific, and no information was presented regarding the sewer networks needed or their costs at the various levels of storage or treatment.

Water Resources Engineers has developed [Roesner, et al., 1974] and the Corps of Engineers has documented [U. S. Corps of Engineers, 1974] a planning level Storage, Treatment, Overflow and Runoff Model (STORM) in which continuous computer simulation (at hourly intervals) is used to predict the effects of various capacities for treatment and storage on overflow quantities and quality. No consideration is given to the collection and conveyance system, however; and no cost relationships or optimizing algorithms have been included. Therefore, the model requires considerable further development to include the collection and conveyance network.

Although the configuration and cost of storm and combined sewer pipe systems have not received significant attention in planning models, other conveyance facilities have been modeled and evaluated for relative costs. Montgomery-Water Resources Engineers [1974] developed "Water, Wastewater and Flood Control Facilities Models" for the San Diego Comprehensive Planning Organization. Based on various planning criteria and stipulated evolutions of land uses, the models identify cost, and optimize (within a given type) the water supply, flood control, or sanitary sewer facilities needed. Stormwater facilities could be considered in a manner analogous to that used for sanitary sewers and flood control channels.

In summary, existing models of collection and conveyance systems for storm and combined sewer flows are primarily analytical models. Some possess a limited design capability. Most incorporate levels of resolution appropriate for either design or control. Not nearly enough effort has been devoted to planning models.

WASTE TREATMENT

One of the first, serious attempts to simulate waste treatment processes was that of Smith [1968]. The stated purposes of the model were "preliminary design and simulation". Preliminary design is not exactly the same as planning in our hierarchial staircase used here. Traditionally this has meant the analyses needed to determine dimensions and estimated costs of various tanks and equipment, which stops considerably short of specifying types and amounts of reinforcing steel to be used in tank walls or other truly design answers.

By way of example, consider the design of a primary sedimentation tank. The objective of the design is to determine the dimensions of the tank. The objective of the tank is to remove settleable solids and BOD. The objective of treatment simulation models built to date has been to estimate the removal percentages of suspended solids and BOD from a tank having a given overflow rate in gallons per day per square foot.

Mathematical models for design of treatment processes built to date have been predicated largely on correlations from data and not on predictions of the dependent variables from theoretical interaction of the independent variables. In short they have served to derive general dimensions in a hurry that can quickly be used in generalized cost equations. As such they represent tentative planning tools but do not materially assist rational design.

Additional papers have been published in which treatment simulation or optimization models have been described. Virtually all of these have used similar correlations from general data or even removal percentages that must be estimated straightaway to "simulate" performance, and those that deal with costs have all used cost equations derived from generally available data. While they have elucidated some general sensitivities of cost to various process types and sizes, they remain unproven and probably unprovable as computer aids for decision making in specific instances. Of more value to designers have been the theoretical and experimental developments of such authors as Lawrence and McCarty [1970], and Jenkins and Garrison [1968],

who related efficiency of organic removals in secondary treatment to mean cell residence time, and Dick [1970] and Dick and Javaheri [1971], who showed the interdependence of secondary clarifier operation with the preceding oxidation step in determining overall performance of biological treatment. These authors, while referring to their work as "mathematical models", do not report that their "models" have been computerized. The computerized models that have been reported for process and cost evaluation were included in a comprehensive bibliography by Tihansky in 1974 [May 1974].

A beginning has been made in computer-assisted operational control of waste treatment systems. It would seem that no prototype plants are operating in this mode as yet, but the works of Guarino et al. [1972] in Philadelphia and Lacroix and Bloodgood [September 1972; December 1972] in Fort Wayne indicate that activated sludge and digester control algorithms that give process adjustment data to operators are now developed and near implementation. Klei and Sundstrom [1974] have achieved automatic control of a laboratory model activated sludge plant (without computer assistance) by automatic sampling of total carbon and CO_2 in the field and sending an electronic signal to the sludge recycle pump to increase the rate of returning sludge in proportion to the carbon concentration in the influent.

It is interesting to note that the algorithms used in these studies differ from those in other design simulation studies in two important ways: 1) they are much simpler, i.e., less complex algebraically, and 2) they are solutions for parameters that were fixed by rule-of-thumb assumptions in the design process, such as the recycle rate. So in operation the variables sought earlier in design are the givens from actual measurements one time step ago and the design givens are the operational variables being sought for one time step ahead.

RECEIVING WATERS

There is such a plethora of models for receiving water quality and quantity now that it would be futile to even attempt a listing or a comparison. Some of the latest compendia on the subject include

those of Systems Control, Inc. [1974] and Brown, et al. [1974]. It is notable from those reviews of available models that many are similar, most are quite usable and helpful for some purposes, all have some weaknesses, and none is perfect.

These two particular reviews are so objective that a reader can find no reported facts or even opinions to lead him to choose one model over another. Perhaps they are that similar. Potential users are probably best advised to use versions whose documentation is most complete and readable. If user talent is to be acquired as well, the client would probably be smart to get the services of the consultant who understands water bodies best and to consider that person's modeling techniques as added gravy.

To summarize available programs succinctly, there are workable programs available for

1) estuaries,

2) streams,

3) lakes and reservoirs, and

4) groundwaters.

The receiving water model in SWMM is a version of the old EPA Dynamic Estuary Model [Feigner and Harris, 1970]. Virtually all estuary models of this type have a hydrodynamics subprogram that computes heads at junctions and velocities and flows in one-dimensional links of a two-dimensional network. The quality subprogram is operated with quantity information supplied as taped output from the hydrodynamic subprogram. Recent versions [Genet, Smith, and Sonnen, 1974; WRE, September 1974] include over 20 constituents as well as phytoplankton and their growth/death relationships with chemical constituents, light energy, and temperature. One version, reported by Chen and Orlob [1972] and applied to San Francisco Bay, includes zooplankton, fish, and benthic animals.

The Texas Water Development Board [1971] produced a stream model (QUAL-I) in 1971 that works on a discrete element network. That model simulated temperature, BOD-DO and conservative constituents, but additions have been made recently to include numerous constituents and phytoplankton, just as included in the estuary models [Roesner, Monser, and Evenson, 1973]. Another version simulates "temperature" either dynamically or in steady-state (Norton, et al., 1974). whereas the first version simulates temperature dynamically if desired, or otherwise it must be read from cards as input if a steady-state simulation is being made for the remaining properties.

Lake models available tend to be one-dimensional in the vertical, stressing the heat budget and attendant stratification which determines the disposition of all other dissolved constituents. Storm or waste loads are specified as input and the model mixes these in the lake or reservoir slice having the same density. The outflows from the reservoir are specified as well, thus the hydraulic solution is given by solution of the continuity equation alone. Versions exist [Chen and Orlob, 1972; Chen and Orlob, 1973; Glanz and Orlob, 1973] that simulate numerous constituents and phytoplankton, zooplankton, fish, and benthic animals.

Groundwater models are less numerous. The only one used vigorously for water quality planning purposes that the writers know is their own [Water Resources Engineers, 1969] which simulates total dissolved solids movement in a junction-link network for the Santa Ana River Basin aquifer in Southern California. It also has a hydraulics subprogram that simulates water movement through both the unsaturated and saturated zones, and a quality program that computes mass transfers given surface mass inputs of stormwater, rainfall, and irrigation percolation, and waste loads. (This program, for obvious reasons, works on annual time steps, whereas the models of surface waters deal with time steps of minutes, hours, or days.)

In summary, there are numerous available models for receiving water simulation. The writers obviously know their own versions best, so we have cited documentations that we know to be descriptive of applied, verified versions. Other developers with similar but assuredly slightly different versions of their own include Hydroscience, Hydrocomp, Harleman and co-workers at MIT, Dysart at Clemson, Deininger at Michigan, Systems Control, Inc., Loucks and co-workers at Cornell, Environmental Dynamics, Inc., Battelle, SOGREAH in France, and many more. Many versions of receiving water models and their documentation are in the public domain and may be acquired, perhaps with payment of a nominal fee, from the Office of Water Research and Technology, EPA, the Corps of Engineers (Hydrologic Engineering Center) or through state or local governments.

WATER REUSE

As has been demonstrated by Weddle, et al. [1970], and by Mulvihill and Dracup [1974], models representing the integration of water supply and wastewater operations in capital expansion programs are completely feasible. Procedures are analogous to those used in analyzing multiple-unit water supply projects when a cost minimization objective is established together with constraints on water supply (demand) and wastewater quality (effluent or receiving water). It is only necessary mathematically to characterize the connection between the two systems in terms of volume and quality degradation in use.

Of course, the same types of data on costs and technology are needed as when analyzing each system separately. In spite of the feasibility of constructing such models, little effort has been devoted to their development and demonstration.

In explicitly considering water reuse, Mallory [1973] compared various alternative schemes for renovating stormwater. He found that for general renovation and use it is more economical to treat water and distribute it through the regular water distribution system because a second (e.g. lawn watering) distribution system would be prohibitively expensive. Distribution to special users of renovated water may be feasible. Of course, the primary deterrent to water reuse is the lack of knowledge on the presence, fate, and ultimate effects of the tremendous variety of impurities that might occur in recycled wastewater. Clearly such impurities are likely to build up within a simply conceived recycling system. Thus, a basic need in considering water reuse, prior to selecting model parameters, is soundly developed constraints related to health or other considerations. Such constraints then would motivate a search for treatment techniques that insure satisfaction of such standards for the least, but probably higher than usual cost.

In spite of the availability of modeling techniques for representing the occurrence and build up of water impurities, the construction and demonstration of such models has been only superficially attempted in urban water resources planning [WRE, 1970; Kugelman, 1974]. For example, Bishop and Hendricks [1971] considered only the relevance of dissolved solids in their study of water reuse versus desalination.

CURRENT MODEL DEVELOPMENTS AND USES

During the week of August 11, 1974, the writers attended a research conference at Franklin Pierce College, Rindge, New Hampshire, entitled "Urban Runoff: Quantity and Quality". The Proceedings of that conference [ASCE, 1975] have now been published. During the conference, the writers presented a cursory statement of the state-of-the-art of urban water modeling, which is published in the Proceedings. Also all the attendees and certain model developers and users in particular were asked to react to the written statements and to send summaries of their current activities to WRE so their current work could be included in this state-of-the-art review.

Subsequently, ten model developers and/or potential users wrote their replies. Their responses are reviewed here.

The respondents were:

1) John J. Bailey, Jr., Vice President
   Reitz and Jens, Inc., St. Louis

2) Dan Brock, Dallas Water Utilities, Dallas

3) Neil S. Grigg, Associate Professor
Colorado State University, Ft. Collins

4) Brendan Harley, Resource Analysis, Inc.,
Cambridge, Massachusetts

5) Stifel W. Jens, Senior Vice President
Reitz and Jens, Inc., St. Louis

6) D. Earl Jones, Jr., Department of Housing and
Urban Development, Washington, D.C.

7) Robert C. McWhinnie, Board of Water
Commissioners, Denver

8) George F. Smoot, U.S. Geological Survey,
Reston, Virginia

9) L. Scott Tucker, Urban Drainage and Flood
Control District, Denver

10) H. G. Wenzel, Associate Professor, University
of Illinois, Urbana

Some of the comments received, particularly those addressed to future directions that modelers should take, were candid and very helpful. Nonetheless, since these comments may be controversial even within the respondent's own organization, some of them will be reported here anonymously.

Perhaps the most telling remark in the entire set of responses came from a person engaged in a local water supply agency. In answering a philosophical question related to communications problems between model developers and model users, he said, simply, "we seem to be most successful where the developer is a (the) user." Many if not all of the replies expanded on this same theme. There is apparently a serious and vexing problem that arises again and again when a new user tries to use a program ("model") developed by somebody else. Invariably, the program contains bugs, solves a slightly different and usually much simpler problem than the one(s) advertised, or simply will not function or execute.

There are many variations of the same communications problem. Often the delivered card deck and documentation reports do not clearly annotate the options available or assumptions implict in the programs. Sometimes the mathematical statement of the general problem is far more precise than the data used to "verify" the model, and hence the

program takes inordinate amounts of time and money to generate its highly approximated and questionable results. Saddest of all are the cases where the model developer and the ultimate user of the model's results, often the fellow who paid for the development, never communicated from the start; and the model developed addresses a problem the user never had. But his real problem is still there, unsolved.

Every developer of a model who gave his program to someone else to use has heard these complaints. Ironically, he knew he would, and he let the program out of his hands anyway. Usually, he lets it go because the user bought it from him. But he knows, and the user cannot believe, that there will be problems with the very next application. There is no excuse for this phenomenon, just as there is no excuse for somebody else's meatloaf not tasting like your mom's. They just are not the same; they were made differently even though they were called the same thing. Another reason it occurs is because the modeler knows from the start that he is setting out to approximate a solution to a theoretical problem with both an approximation of the theory and an approximation of the prototype water body. The model user or the user of the model's results views his problem, and the theoretical statement, as precise and infinitesimal. Almost invariably, the first application of a handed-over program is made to a problem that either 1) lies outside the range of applicability of the equations simplified in the program, or 2) requires a time step shorter than the model or its "theory" can accept. Highly qualified and experienced programmers make these mistakes just like neophytes do. The nondeveloper-user almost always expects a new program to be both more exact and more flexible than it is or was ever intended to be.

Without question, improvements in model documentation and preparation of user's manuals can be made. The communications problems between modelers and subsequent users of their products are too numerous and well documented for simple sloppiness of explanation to continue. Responsibilities lie with both parties, however, and the tedious method of constant re-explanation between the developer and the subsequent user is the only fail-safe procedure. A user who picks up a program deck cold is going to have problems with it. Period.

A second viewpoint that appeared in one form or another in almost every response was that today's models generally outstrip the data available to calibrate them, much less verify them. Perhaps predictably from this group, the most important data need was thought to be time-coordinated data on quantity and quality of urban runoff--on watersheds, in pipes and open channels, and in receiving waters. There is apparently an undercurrent of feeling that a better data base might suggest improved methods and even improved theoretical/mathematical bases for modeling the quality of urban runoff. (The writers tend to agree.)

A third comment that appeared in several of the responses was that the models should continue to be addressed to singular, particular subsystem problems because, regardless of modeling capabilities to deal with several or even all urban water subsystems simultaneously, the functional responsibilities of various political/water agencies are likely to remain splintered. Flood control or water supply agencies are not likely to face operational problems with waste treatment, and even municipal public works departments tend to be split into "water departments" and "sewer departments" with special duties, their own budgets, and their own problems. It is likely that only where wastewater reclamation, including municipal reuse, becomes a viable alternative will a single agency require comprehensive urban water modeling approaches.

Specific comments of merit that we are happy to assign to specific individual respondents include the following.

John Bailey, Jr. presented a lengthy and thoughtful discussion of specific programming particulars that would be helpful to any program developer whose program is to be used later by other parties. Some of his major points are these:

1) "The user should be informed which sections of the program coding were executed during the particular analyses that was made. [The results] should also specify which sections of coding were not executed . . . where successive approximations or iterative solutions are made in the course of the analyses, the report should specify whether the maximum numbers of iterations built into the coding to avoid endless loops were reached and whether a result of less than the desired accuracy was finally adopted."

2) ". . . at least 1/3 of the coding should be devoted to checking the reasonableness and consistency of the input data . . . it is not necessarily a program defect if certain of the data are required to be specified more than once or in different forms, and if the computer then checks these data for consistency before printing large volumes of . . . numbers to be used in making important decisions . . . often the user is never certain that the problem being solved by the computer is the same one that the user thinks he has specified."

3) [Usually it is much more difficult to get data for a model than it is to produce the computer program itself.] "<u>For this reason, it should be [made] rather difficult for the user to get a solution from the system model. He should be forced to acknowledge, in the input stream, that he is using default options, that certain data appear to be inconsistent or even incorrect and that intermediate computed values are</u>

> <u>considerably larger or smaller than the values ordinarily to be expected in the kind of engineering computations the model is designed to make if such is the case.</u> Statements in the output stream like 'rainfall depth is 12 inches in one hour', or 'velocity in channel is 55 feet per second', or 'pipe diameter is 25 feet', should be prominently displayed so that the user is aware that values outside the normal range were encountered during execution of the program." [Emphasis is Bailey's.]

Acknowledging that these precautions imply the use of extra computer time for the many checks he advocates, Bailey points out that the addition in computation time is small compared to the saved headache and mistake time the user must spend deciphering an unannotated piece of output. Lastly Bailey warned that programming for others requires preknowledge of other hardware and operating software that might subsequently be used with the program, and that the original programming effort should be carefully executed to avoid statements or operations likely to be incompatible with other users' machinery.

Bailey is obviously one of the fairly unique individuals who has both programmed for others and has used other developers' programs. His insights to the nitty-gritty programming and documenting safety checks, therefore, are especially incisive, and the writers want to thank him particularly for his response.

Earl Jones is a hydrologist with HUD, highly experienced in flood control analyses. He would tell anybody that he is not a modeler himself. Nonetheless, he carries with him a body of experience with the "resource out of place" called a flood and a patience, both of which modelers occasionally test. Jones is especially concerned with lack of data and experience in the hands of modelers who tend to rely on their singular product, the program. "This has been a particular problem with regard to use of the [named] model, which is excellent of itself, but which is dependent upon input data . . . that in turn are often questionable, or at least possessed of undefined interdependence."

We find it interesting that Jones, the engineer-hydrologist, would also conclude, "There remains a tendency to model quantifiable factors and to disregard the seemingly intangible considerations. Soft sciences inputs to water resources problems are greatly in need of further refinements."

Bob McWhinnie is the Director of Planning and Water Resources for the Denver Board of Water Commissioners. He also is not himself a modeler. But the Board has a uniquely qualified modeling staff and access to not one but several computers. Use of models is routine in this forward-looking local agency [Hobbs and Britton, 1974]. McWhinnie suggests that modelers should stress:

1) "the need to verify any model with local data,

2) the concept that the model is only a tool, and

3) that analysis of the results of the model run are the real key to application of any model."

This last point is highly significant and may be the most helpful concept in ameliorating the developer/user communication problem. It is worth amplifying that computer printout rarely if ever contains "the" answer to the "the" problem. The significant analysis leading to solution of a real problem starts when a successful run or set of runs ends. A model user has to be a qualified results analyst, or he is not a user at all. George Smoot highlights this distinction when he says, "We have noted no exceptionable and unresolvable communication problems with others in the field of modeling. Perhaps our biggest concern is in reporting the accuracy of model results." Getting a program to execute with data given in the format described in a user's manual is one problem, but interpreting the results is quite another and more important problem.

Grigg, Tucker, and Wenzel have all cautioned that automatic operational control software is going to be a complex and difficult development problem. The writers had indicated that the programming technology is now available or soon would be to permit the development of the needed software in the near future. These respondents, particularly Grigg and Wenzel, point out that while the techniques are available, the dog-work of checking all the possible control options, programming the numerous but otherwise simple on-off commands in the proper sequences, and general debugging and verification steps will be tedious and time consuming. Several hundred years went by between the time that man figured out how to get to the moon and the time when he actually went. This is a fitting last restatement of the warning against overpromising on the part of model developers.

Several of the respondents listed "characteristics" of some specific programs they have developed, are now developing, or have acquired from others and are now using. Some of the more interesting developments now underway are

1) A river system operation model (700 reaches) for quantity and quality being developed by the Dallas Water Utilities. This model, which will operate on hourly time steps, was not completed by September 1974, but it was already being verified against field data.

2) A multiple impounding reservoir operations model (reservoirs and 2 distribution centers) also being developed by the Dallas Water Utilities. This will be a dynamic programming,

optimization model operating in monthly time steps. It will produce the optimal operation pattern in terms of cost and final storage volume.

3) A reservoir operation simulation (flood routing) model being developed by the Denver Board of Water Commissioners. This model will operate on hourly time steps. It will be an empirical model, but it was preliminarily (September 1974) operating on a teletype terminal to a Honeywell 635 machine in approximately 1 second for a 15 day simulation.

It is interesting to note that the Denver Board of Water Commissioners is able to access five separate computers: IBM/370-195, Honeywell/440, Honeywell/635, Univac/1108, and GE/430. The Dallas Water Utilities uses an IBM/370-145. Resource Analysis, Inc. has access to IBM/370-155 and IBM/370-195 equipment. The USGS model reported by Smoot for peak flow synthesis for rainfall/runoff events is operated on an IBM/370-155 machine. So routine users of scientific software in the urban water field are generally using large storage, rapid computers. Denver's access to such varied hardware is probably unique, but entities interested in beginning routine water modeling will probably find it advisable and economic to use at least one model of first rate scientific computing equipment.

SECTION VI

FUTURE URBAN WATER MODELS

There is a variety of criteria that can be used to judge what should be developed or what is likely to be developed next in the urban water modeling field. In this chapter the writers' suggestions are based on two criteria:

1) the state-of-the-art as just described in Section V, and

2) The writers' collective view of what is a) most likely of early success, b) most required in terms of pressing needs, and c) most feasible in terms of EPA's and the Storm and Combined Sewer Section's responsibilities and budgetary wherewithal as we understand them.

Right at the outset it might be helpful to summarize the models believed to be needed and possible of early development. Following that, each model type will be discussed in some detail. Urban water models that should be developed by 1980 include the following

Planning

1) A new and better watershed quality model.

2) A transport simulation capability in a planning model for storage/treatment/overflow evaluations (STORM-II).

3) Capability to simulate quality control or treatment processes in STORM-II.

4) A long-period (10-30 year) receiving water ecologic model.

5) An urban water users economic effects model.

6) A downstream water users (receiving water or reuse) economic effects model.

Design/Analysis

1) A solids deposition and scour simulation capability in an hydraulically sound sewer transport model.

2) Dry-weather waste treatment simulation capability in a SWMM-type model.

3) Reclamation or reuse routing capability in a transport/treatment model.

4) Nonstructural runoff control simulation capability in SWMM-type runoff module.

Operation/Control

1) Real-time control software for sewer systems.

2) Real-time spatially varied rainfall prediction capability.

SIMULATION MODELS

Planning

Runoff Quality Model--

Quality simulation capability now existing in SWMM-type runoff models is adequate for some planning applications. However, the dirt-and-dust linkage inherent in this model can be and has been assailed as difficult to calibrate and deficient in its statistical nature which requires a considerable data base in each new calibration/application. Particularly weak is the assumption that dissolved pollutants are in some way related to the fractions of the same materials attached to suspended particles and that the attached pollutants are directly related to the amount of suspendable dirt or dust being carried in the runoff. There is no present capability to simulate subsequent dissolution or dissociation of attached pollutants to the dissolved state.

What is needed is a still fairly simple, but more first-principles derived model of the accumulation, motion, and fate of dissolvable and solids-associated pollutants. The model should include relationships and accounting procedures for the following states and change processes:

Accumulation on watersheds:

Dissolvable materials (BOD, nutrients, heavy metals)
Solids-associated materials (BOD, metals)

Motion during runoff

Dissolvable materials (fractions of accumulated pollutants dissolved and carried with runoff)
Solids-associated materials (fraction of accumulated solids scoured into motion and carried by runoff)

Fate of pollutants

Dissolvable materials (decay, precipitation, adsorption, conservative transport)
Solids-associated materials (decay, dissolution, deposition, resuspension)

Runoff Transport Model--

The storage-treatment-overflow and runoff model known as STORM has received widespread application. Nonetheless, as useful as the model is, virtually every user who has tried it has wished that the sewer transport subsystem were represented in some fashion. The users quickly point out that SWMM-type models are probably too detailed and require too much data for the planning questions at hand, but STORM has no transport routing capability at all. What is needed is something in between--a continuity-balancing routing model for major trunk sewers, either storm or combined ones. The model probably would become too cumbersome if it had more than 20 routing elements in it. Moreover, there need be no provision for hydraulic solutions for weirs or other appurtenances, but one might wish to specify flow diversions either as a constant value, a variable with time, or a variable with head at another point. More refinement than that would probably make the model unwieldy for planning applications. The question to be answered is simply, how does the physical layout of the city and its drainage network affect what should be done next for storage, treatment, and overflow management? The answer can be very significant, and incorporation of some routing capability in STORM would probably be the simplest way to answer the question.

Quality Control Process Model--

We hesitate to call this simply a "treatment model" because what is intended is less than a process simulation model for various unit process strings and more than removal percentages for treatment plants alone. What might well be done is to add to the transport simulation just recommended some removal capability, variable by location and constituent. Let's call the variable RMOV(N, I), where N is the location identifier, and I is the constituent counter. This would operate on the concentrations of various constituents at a node to represent either treatment reductions or upstream land treatments, retention basins, or other devices that reduce pollutant loads to

downstream points. Refinements might include having one variable for treatment processes for which default removal efficiencies are programmed, while upstream removals would have to be specified each time.

Long-period Receiving Water Ecologic Model--

While there have been significant improvements beyond Streeter-Phelps, DO sag models in recent years with regard to the simulation of water quality effects on aquatic communities, the comprehensive ecologic models developed have become temporally very detailed. They generally use time-steps of 10 minutes to 3 hours (a day has also been used) depending on hydraulic limitations and other factors, but in any event they are usually operated to simulate the diurnal sunlight-darkness phenomena associated with photosynthesis and temperature changes. And, while they have been used, at some considerable computer expense, to simulate as much as one year in these small time steps, they appear to have an inherent tendency for long time instability such that the investigator often finds himself at the end of a simulated year with a pond-full of fish, but no algae, zooplankton or benthic animals.

There are important long-term planning questions that need to be asked and cannot be answered economically with the models currently available. These include: 1) How much beneficial effect in the long term future can we expect from instituting more advanced waste treatment in, say, 1977, 1983, and 1985? 2) How long will it take for a water body, say Lake Erie, to respond beneficially to removal of waste loads by 25, 50, 75, or 100 percent? 3) What are the long-term implications of increased population and changed land uses on receiving water bodies to which increased waste flows will be discharged following secondary or more advanced treatment? 4) In what year should nutrient removal for either nitrogen or phosphorus or both be required for municipal or industrial discharges to a specific receiving water?

It would seem that a long-period aquatic ecologic model would be of considerable value. Some fundamental conceptualization and experimentation will be necessary, however, before such a model becomes a routinely usable tool. It will be necessary, for example, to determine how big a time step may be used (days, months, seasons, or years) while maintaining chemical, physical, and biological credibility. Can the diurnal variabilities be averaged or assumed away and still permit development of a model that faithfully reproduces explainable long-term behavior? Will the representations of the more stable aspects of a receiving water, such as the benthic community and the fish population, not have to be more exact and better understood as the time step is increased, particularly if it is increased beyond the hydraulic residence time? Can such a model be built as a

representation of physical, chemical and biological behavior, or must it be a statistical analyzer and predictor operating on historical data?

These questions would have to be addressed in a feasibility study before such a model could be constructed; but the uses of such a model are compelling enough that the feasibility study, at least, should be undertaken, and fairly soon.

Design/Analysis

Solids Modeling Capability--

Into either the SWMM or San Francisco combined sewer transport models, capability should be added to simulate the "first flush" of deposited solids and associated pollutants, and the accumulation of these materials during dry(er) weather.

This capability should include not only the physics and the timing of the accumulation and scouring phenomena but also the simulation of processes or devices to minimize their deleterious effects. For example, cunettes in the bottom of large pipes or channels, although they present certain clogging and maintenance problems, still work well if properly designed. Another method of control that could be designed with model assistance is the swirl concentrator. A third possible mechanism for dealing with first flush solids is a conventional grit chamber, which might have to be made larger than one designed for nominal dry weather flows alone, to accommodate both higher flows and higher solids loadings during storms. Simulation of all these devices to aid design of combined sewer systems should be undertaken immediately.

New models should also address the implications of improved solids management methods upstream on sludge handling at treatment plants. Factors to consider include volumes generated plus the size and cost of facilities for transmission, upstream entrapment, downstream treatment and disposal. Consideration should also be given to the treatability of stormwater solids by various processes, especially the biological ones.

Dry Weather Waste Treatment--

In SWMM, treatment is represented as BOD, suspended solids, and coliform removals that were based on data from specific field examples and on general rules of thumb for a variety of treatment processes applicable to stormwater. Treatment processes "selected" by SWMM for construction are sized on the basis of the storm hydrograph going through during the simulation, and operating costs are computed on the basis of power and chemical costs only during the storm.

What is needed is capability to simulate either existing or planned additional treatment plants which may include primary,

secondary, or advanced waste treament processes. Sizing should be either specified (if it has nothing to do with the storm event currently being simulated), or the option should exist to size the (new) plant on the basis of a specified percentage, up to 100 percent, of the maximum storm event flow that enters the plant during the simulated period.

Costs should be calculated optionally as either 1) the annualized capital and operation expenses regardless of the storm being simulated, or 2) as the annual total cost times 1/365, times the number of days in the simulated event. Options should also be developed whereby it is possible to use existing capital and operating cost and flow-efficiency data from the plants being simulated or to use generalized functions from the literature to estimate these values.

The object should be to permit the calculation of effluent qualities for various constituents and the cost to attain them for all the dry weather and wet weather facilities available or to be added.

Reclamation/Reuse Routing Capability--

SWMM-type transport models should be expanded to include simulation capability for routing storm or combined sewer flows (treated, partially treated, or untreated) to points of further use wherein the conveyance facility is not the receiving water. Second uses could include industrial nonpotable uses, agricultural irrigation, and storage for either recreational or eventual municipal reuse. The quantity and quality of delivered water should be calculated; and if the water enters storage, the resulting quality in the storage reservoir should be calculated. If water must be discharged to the receiving water net of that demanded for reuse, the resulting quantity and quality of the discharge should be calculated as well. One refinement of this capability that might be added is the ability to send water to the point of reuse according to a specified demand schedule that varies by season, month, day of the week, or hour.

The advent of zero discharge as a goal will make this capability an item of ever-increasing priority.

Watershed Management Simulation Capability--

There are several runoff management practices that can be instituted to lower the flow rate, total volume or pollutional load of runoff at downstream points. These include 1) relatively small, but perhaps numerous detention basins on upstream parts of urban watersheds, 2) porous pavement materials, 3) roof-top storage, 4) street sweeping, litter pick-up, and other means of land surface cleansing, and 5) erosion control practices at construction sites or elsewhere.

In current models of runoff, distinction is made between the runoff produced from pervious surfaces and that from impervious surfaces. Rainfall occurring on pervious surfaces is converted to runoff following two abstraction processes, infiltration first and detention storage second. Rainfall on impervious surfaces is converted to runoff after detention storage alone is satisfied. Pollutant loads are generated from a dirt-and-dust accumulation linkage.

Consequently, to represent the runoff management practices listed above would require rather simple modifications to existing programs in terms of 1) increasing infiltration rates, 2) increasing detention storage volumes, 3) defining new storage nodes in the model network, or 4) altering solids accumulation rates or schedules of accumulation and cleaning.

SYSTEM CONTROL SOFTWARE

During automatic operational control of urban water systems, simulation will also take place; but a major distinction will be that the time step and the duration of the simulated event will be real. That is, the software will not be working with discrete and complete hyetographs or hydrographs and be asked to simulate the entire storm. Quite differently, it will be given partial records of rainfall at discrete points on the ground and partial records of flow at discrete points in the sewer system and asked to predict behavior ahead in real time from right now. Such software is likely to be totally different, certainly quite different, from SWMM or its cousins.

There are two operational software development projects that should be initiated as soon as possible. These both are directed to real-time operational control of combined sewer systems.

Spatially Varied Rainfall Prediction Capability

There are two possible ways that real-time automatic control of sewer systems can work: 1) in reaction mode, or 2) in predictive mode. Now hardware and software can be linked together to operate in reaction mode and the operation will go. This would entail real-time statistical analyses of what had just occurred at several raingages and/or at several pipe junctions or storage basins. However, it is not difficult to see that conservative over-design would probably result if historical data only were used to make real-time decisions. If it were possible to look ahead ten minutes to an hour, better operational decisions would almost certainly result.

Statistical analyses of very recent rainfall and head or storage data (last 20 minutes or so) would still be used, but through "storm pattern recognition" analyses the software could predict ahead whether

the rainfall, and hence runoff, to come would be greater, less, or the same as that in the recent past. The control software would be able to "decide", then, that since rainfall is predicted to get even heavier, say, that retention basin B should continue to empty; whereas even though rainfall were very heavy at the current time, if the prediction was for rainfall to cease imminently, the retention basin's outflow valve could be closed. It is possible that quality considerations, such as whether "first flush" had occurred yet or not, might also be incorporated in the overall control model, but here we recommend merely that the ability to predict rainfall ahead in real-time from real-time, recent rainfall records be developed.

Real-Time Sewer Simulation and Control Models

In addition to the model just described for predicting rainfall inputs in real time, it will be necessary to predict what will happen downstream in the sewer system, given those inputs. Then it will be necessary to open or close valves, divert or store flows, or otherwise change or maintain operation on the basis of the predicted response.

The first model necessary is a real-time simulation model for the sewer system. The current SWMM-type transport models could provide the base from which such a model could be developed. However, to minimize execution time and core storage, the operational simulation model would have to be much reduced in scale. While it would have to perform some routing from the point of control through downstream check points, it would probably not have to simulate the pipe system throughout the watershed. A network of pipes containing 10 or so pipes and junctions would likely suffice. It is possible that this model or variations of it would be used for several locations throughout a metropolitan area, but in each real-time application only a small portion of the system would be simulated and even then in a simplified manner.

Secondly, the software to actuate controls at various points such as retention basins, inflatable dams, or valves must be developed. Grigg and his co-workers at Colorado State University are currently developing such software and contemplating its testing with a laboratory-scale retention basin. It remains to adapt their products to a prototype, such as the retention basin(s) now planned for construction and operation in the City of San Francisco. The approach to be used in development of this software is to provide two or three levels or "heirarchies" of control. One would regulate runoff in the trunk lines of a given catchment area through use of local retention basins responding to local rainfall and flows in local trunk sewers. The second level of control would be superior to the first, in which local control could be overridden according to available sewer or retention basins or treatment capacity in another catchment area, to which flows might be routed from a second catchment, regardless of current status in the second area.

While a third and still higher level of control is possible, it is recommended that two level control be developed first. Additionally, control models that direct responses based on quality should be considered for future development as well. Optimal control could be made dependent in part on suspended solids concentrations at various points, either as monitored or as predicted by the simulation software. The first task, however, should be the development of control software that responds to rainfall inputs and downstream flow and storage information monitored or simulated in real time.

COSTS AND BENEFITS

It may seem inappropriate to suggest that the Storm and Combined Sewer Section of EPA develop models of benefits and costs related to overall urban water management alternatives. However, the advent of municipal reuse of storm and other wastewaters makes it imperative that decision analytics be developed to help decide the worth of either reusing water in the urban area from which the wastewaters are generated or discharging the wastewaters, treated or otherwise to permit beneficial or damaging impacts downstream.

Two basic models are recommended. One would assess the cost for urban users of supplying and using waters of various qualities, including reclaimed wastewaters from storm or combined sewers. The second would assess the treatment costs and downstream damages, if any, resulting from discharge of partially or "completely" treated wastewater. These models are described below.

Urban Water User Economics Model

Many of the benefits, or foregone costs, of water supplies treated to acceptable levels have yet to be counted. Indeed methods or equations for relating concentrations of various constituents in water to what those concentrations are worth have not been developed for constituents other than TDS and hardness, and those benefits have not all been quantified.

In a social-acceptability context it has been argued that "benefits" per se should not be sought or even discussed because they are likely to be numerically much smaller than the costs to attain them. Instead, it has been suggested, "costs" should be counted including the costs users must bear for slightly or considerably degraded quality water, and then the objective should become minimization of total cost. So be it. The argument is not compelling from an academic, how-to-do-it view. The point is that damages are suffered, they are likely sizeable in dollars and cents, and considerable arithmetic must be performed to account for them. Therefore, a computerized accounting procedure (model) should be built. Sufficient quality-use-cost data exist that such a model could be built.

The first step should be to derive explicit relationships between costs (or savings) and concentrations (or reductions in concentrations) for various constituents. Then a computer program can slowly be built to incorporate each new constituent, water use group, or treatment process.

The model should be applicable to specific water supply, treatment, and use planning alternatives, not a general model for the United States. It should operate on time steps of not less than one year and probably of five years. It should be able to deal with water supply alternatives including blending of water from several sources either before or after joint treatment, or before or after separate treatment including none. Changes in quality within the distribution system resulting from operational changes in supplying water from several sources (reservoirs or treatment plants) can probably be ignored. Constituents for early inclusion should be TDS, hardness, iron (and manganese), taste and odor, and turbidity. Later inclusions might be bacteria and viruses, organic compounds, sodium, and pH.

Receiving Water Users Economic Effects Model

A similar, but nonetheless different, model should be constructed to assess damages to users of receiving waters who are located downstream of single or multiple waste discharge points. The users included should be 1) fish and wildlife, 2) recreation and esthetics, 3) industrial water users, 4) agriculture, and 5) municipal water users. Constituents of interest, which should be related to downstream costs, include dissolved oxygen, TDS, hardness, coliform organisms, heavy metals, temperature, nitrogen (ammonia and nitrate), phosphorus, and turbidity. Later additions might include pesticides, trace organics, pH, color, sodium, and boron.

The input qualities to be given to this model should be the concentrations at the point(s) of use. This implies that a transformation function of some type will exist to perform the dilution-dispersion-decay changes downstream from the points of discharge. Existing quality models could be used or modified and then used for this purpose or the functions could be solved by hand if need be.

Even though such a model should operate on long time steps of one year or more, nonetheless it should be capable of reflecting at least seasonal quality degradation caused by nonpoint runoff. Whether this would be reflected by using stream qualities at the levels following average storms or the average annual quality including storm effects or some combination of both could be left to the model user's discretion.

The model should calculate the annualized capital and operations costs of an alternative plan of waste treatment and disposal facilities and the costs to downstream users of accepting the resulting receiving

water quality. The model could compare these costs for each alternative with the total costs incurred in the "no action" alternative, presumably evaluated first.

Lastly, it might be noted that "downstream" users could also include reusers or reclaimers of stormwater or municipal or industrial wastewaters.

SECTION VII

PHASED IMPLEMENTATION PROGRAM

Quite naturally, the schedule and budget suggested below reflect the writer's opinions of 1) priorities for earlier or later development, and 2) the relative magnitude of the development tasks involved. The funding levels suggested for each fiscal year may not be completely realistic with respect to the budgetary future of the Storm and Combined Sewer Section. Indeed the estimates for later years are higher than the currently estimated figures we inferred during discussions with Section personnel. This merely reflects another of our opinions: that the current estimates are too low for an effective but ambitious program. The model development tasks suggested are only those described in Section VI, and considerably more work might be deserving of attention. We have to presume that the other tasks will be left to other agencies, sections, or years.

The suggested schedule and project budgets are shown in Table 2. Some discussion of the major task headings is given below.

PLANNING--SIMULATION MODELS

First of all, every model listed in Table 2 and described previously in Section VI could be developed starting virtually immediately. The earlier development tasks are so indicated because 1) there is a pressing need for their results, or 2) their products are already partially developed now.

The Runoff-Transport Model that is suggested for early development in the planning tasks would be an addition of capability to the existing STORM model. This could be accomplished by borrowing from the SWMM transport model or by developing a new, planning level representation of runoff transport. But this task is assigned an early position primarily because it represents an addition to currently developed tools.

The Improved Runoff Quality Model and the Long-period Ecologic Model could both be used today. They will represent important new

Table 2. PHASED IMPLEMENTATION PROGRAM AND SUGGESTED MAN-EFFORT*
(estimates in man-years)

Task Objectives	Years 76	77	78	79	80
PLANNING--SIMULATION					
1) Improved Runoff Quality Model		1	1	2	
2) Runoff Transport Model (STORM-II)	1				
3) Quality Control Process Model				1	1
4) Long-Period Ecologic Model		1	2		
DESIGN/ANALYSIS--SIMULATION					
1) Solids Deposition-Scour Model	2				
2) Solids Handling Model	1	0.5			
3) Dry-Weather Treatment Model				1	2
4) Reclamation/Reuse Routing Model (UWMM)		2	2	2	6
5) Watershed Management Controls Model			0.5	1	0.5
OPERATION/CONTROL SOFTWARE					
1) Real-Time Control Software	1.5	2	1.5		
2) Real-Time Control Predictor				1.5	1.5
ECONOMIC PLANNING MODELS					
1) Urban Water Use Economic Model				1	1
2) Receiving Water Economics Model	2	2			
Annual Totals	7.5	8.5	8.5	9.5	10.5

*Administrative effort for the Storm and Combined Sewer Section is not included.

developments in planning capability. It is suggested that their development be deferred until 1977 only because there are other developments already planned for 1976, and these model projects will have to be deferred one year.

Development of the Quality Control Process Model has been deferred for several reasons. First, the capability represented by this model can be crudely but easily approximated now in a SWMM runoff model, but perhaps even better in the improved STORM model. So partial capability can be introduced now or not later than 1977. Still better, however, would be inclusion of this capability in the Improved Runoff Quality Model not scheduled to be completed until 1979. Additionally, the suggested budget for this task is relatively high because some fundamental changes in the runoff model structure are likely to be needed to represent upstream watershed controls accurately. Specifically it may be necessary to develop a runoff quantity-quality model that accommodates nodal locations within subwatersheds, so a retention basin or other control measure can be simulated to be at the upstream, middle, or downstream portion of the watershed in question.

DESIGN/ANALYSIS--SIMULATION MODELS

The Storm and Combined Sewer Section is currently contemplating development of a Solids Deposition and Scour Model for combined sewer simulation. Consequently, its development has been scheduled early in the program. Moveover, the work will likely entail incorporating necessary statements into existing SWMM-type transport models; so this task also represents an extension of existing capability, and hence it can begin immediately.

The development of a Solids Handling Model should begin almost immediately. This problem represents the last major subarea of modeling capability that is required to address the entire stormwater pollution management picture.

The Dry-Weather Treatment Model has been deferred primarily because more rule-of-thumb models simply are not needed, and cause-and-effect models must await more fundamental research on kinetics of individual processes and waste materials.

The Reclamation/Reuse Routing Model is destined to become the Urban Water Management Model (UWMM). This model should be capable of routing water and quality consitutents back through the urban water use subsystem from the waste disposal subsystem. In short, it will include feedbacks and hence be nonlinear. Optimization techniques should be considered as possible ways of solving the resulting set of equations to be solved simultaneously. Considerable effort and money

will be required for the development, calibration, and demonstration of this model in it final form. The demonstration effort will likely take until beyond 1980.

The Watershed Management Controls Model should be deferred until more field data have been collected on the behavior of such alternatives as porous pavements and erosion control practices. This model will require inclusion of the Runoff Quality Model that properly treats soluble and sediment-attached pollutants.

OPERATION/CONTROL SOFTWARE

The two operation-level models identified are both geared to real-time automatic operational control of combined sewer systems. We have identified the Real-Time Control Software and the Rainfall Predictor as the needed elements because work is going foward now in the control area, because a demonstration grant to develop control software is being contemplated, because the results are needed almost immediately, and because rainfall prediction in real time will perhaps be the single most important, central factor in controlling sewer systems automatically.

ECONOMIC PLANNING MODELS

The Receiving Water Economics Model has been scheduled before the Urban Water Use Economics Model for several reasons. First, receiving waters are being polluted and damages are being suffered in yet unquantified amounts right now. Moreover, agencies such as the National Commission on Water Quality are faced already with answering the question of whether meeting the PL 92-500 abatement levels will be worth the cost. There is no analytical economic method today to answer that question. The writers believe that sufficient data exist to develop an accounting procedure relating concentrations of numerous constituents to the utility of water in streams, lakes, estuaries, and the oceans. But formidable tasks remain to derive the relationships from the literature and to encode these in a model, probably most expeditiously tied to receiving water quality models.

The Urban Water Use Economics Model has been deferred because some existing models already treat the economic effects of TDS and hardness in urban water supplies, and because regardless of the amounts of economic damages suffered from slightly degraded quality, the tendency has been to supply whatever amounts of water are demanded in at least adequate condition with respect to quality. As water shortages increase, however, such a model is likely to be very useful in allocating limited supplies of increasingly less desirable waters.

REFERENCES

American Public Works Association, Water Pollution Aspects of Urban Runoff, Water Pollution Control Research Series, WP-20-15, Federal Water Pollution Control Administration, Washington, D.C., January 1969, 272 p.

American Society of Civil Engineers and Water Pollution Control Federation, Sewage Treatment Plant Design, ASCE Manual of Practice No. 36, WPCF Manual of Practice No. 8, 1959, 357 p.

American Society of Civil Engineers, Urban Runoff Quantity and Quality, Proceedings of a Research Conference, William Whipple, Jr., editor, ASCE, New York, 1975, 272 p.

Amorocho, J., and A. Brandstetter, "Determination of Nonlinear Functional Response Functions in Rainfall-Runoff Processes," Water Resources Research, AGU, Vol. 7, No. 5, October 1971, pp. 1087-1101.

Andrews, R. A., and R. R. Weyrick, "Linear Programming Use for Evaluating Water Resources and Cost and Benefit Allocation," Water Resources Bulletin, AWRA, Vol. 9, No. 2, April 1973, pp. 258-272.

Anonymous, "Controls That Learn to Make Their Own Decisions, Business Week, April 6, 1974, pp. 30D-30H.

Anonymous, "Minicomputers That Run the Factory," Special Report, Business Week, December 8, 1973, pp. 68-78.

Argaman, Y., U. Shamir, and E. Spivak, "Design of Optimal Sewerage Systems," Journal of the Environmental Engineering Division, ASCE, Vol. 99, No. EE5, October 1973, pp. 703-716.

AVCO Economic Systems Corporation, Storm Water Pollution from Urban Land Activity, AVCO Economic Systems Corporation, Washington, D.C., 1970, 325 p.

AWWA Research Committee on Distribution Systems, "Priorities in Distribution Research and Applied Development Needs," Journal of the American Water Works Association, Vol. 66, No. 9, September 1974, pp. 507-509.

AWWA Research Committee on Distribution Systems, "Water Distribution Research and Applied Development Needs," Journal of the American Water Works Association, Vol. 66, No. 6, June 1974, pp. 385-390.

Becker, L., and W. W-G. Yeh, "Optimal Timing, Sequencing, and Sizing of Multiple Reservoir Surface Water Supply Facilities, Water Resources Research, AGU, Vol. 10, No. 1, February 1974, pp. 57-62.

Berthouex, P. M., and L. B. Polkowski, "Optimum Waste Treatment Plant Design Under Uncertainty," Journal of the Water Pollution Control Federation, Vol. 42, No. 9, September 1970, pp. 1589-1613.

Bidwell, V. J., "Regression Analysis of Nonlinear Catchment Systems," Water Resources Research, AGU, Vol. 7, No. 5, October 1971, pp. 1118-1126.

Bishop, A. B., D. W. Hendricks, and J. H. Milligan, "Assessment Analysis for Water Supply Alternatives," Water Resources Bulletin, AWRA, Vol. 7, No. 3, June 1971, pp. 542-553.

Blood, W. H., C. G. Clyde, and D. F. Peterson, Jr., "A Computer Simulation Program for Optimizing Conjunctive Operation of Desalting Plants," Water Resources Bulletin, Vol. 7, No. 4, August 1971, pp. 785-801.

Brandstetter, A., Assessment of Mathematical Models for Storm and Combined Sewer Management, EPA, Municipal Environmental Research Laboratory, Cincinnati, OH, 1975, 540 p.

Brandstetter, A., R. L. Engel, and D. B. Cearlock, "A Mathematical Model for Optimum Design and Control of Metropolitan Wastewater Management Systems," Water Resources Bulletin, AWRA, Vol. 9, No. 6, December 1973, pp. 1188-1200.

Brater, E. F., and J. D. Sherrill, Rainfall-Runoff Relations on Urban and Rural Areas, EPA-670/2-75-046, National Environmental Research Center, EPA, Cincinnati, May 1975, 97 p.

Bree, D. W., Jr., Reduced Representation of Demand-Serving Portion of Water Distribution Networks, Technical Memorandum No. 2, System Control Inc., Palo Alto, California, 1974, 29 p.

Brock, D. A., "Closed-Loop Automatic Control of Water System Operations," Journal of the American Water Works Association, Vol. 55, No. 4, April 1963, pp. 467-480.

Brock, D. A, Metropolitan Water System Operation Subsequent to Nuclear Attack or Natural Disaster, Dallas Water Utilities, Dallas, Texas, May 1970, 364 p. (NTIS AD 711 956).

Brock, D., "Simulation: Here's How," Water and Wastes Engineering, Vol. 10, No. 7, July 1973, pp. 29-32.

Brown, J. W., M. R. Walsh, R. W. McCarley, A. J. Green, Jr., and H. W. West, Models and Methods Applicable to Corps of Engineers Urban Studies, U. S. Army Waterways Experiment Station Miscellaneous Paper H-74-8, Hydraulics Laboratory, Vicksburg, August 1974, 34 p. and 382 p. appendix.

Burke, T. R., "A Municipal Water Demand Model for the Coterminous United States," Water Resources Bulletin, AWRA, Vol. 6, No. 4, August 1970, pp. 661-681.

Carey, G. W., L. Zobler, M. R. Greenber, and R. M. Hordon, Urbanization, Water Pollution, and Public Policy, Center for Urban Policy Research, Rutgers University, New Brunswick, New Jersey, April 1972, 214 p.

Chen, C. K., and W. W. Saxton, "Combined Wastewater Overflows," Journal of the Water Pollution Control Federation, Vol. 45, No. 3, March 1973, pp. 434-448.

Chen, C. N., "Planning Tools for Erosion Control in Urbanizing Watershed," Urban Runoff: Quantity and Quality, Proceedings of a Research conference held at Franklin Pierce College, Rindge, New Hampshire, August 11-16, 1974, American Society of Civil Engineers, New York, 1975, pp. 159-165.

Chen, C. W. and G. T. Orlob, Ecologic Simulation for Aquatic Environments, Final Report to the Office of Water Resources Research, Water Resources Engineers, Walnut Creek, California, December 1972, 156 p.

Chen, C. W. and G. T. Orlob, Ecologic Study of Lake Koocanusa--Libby Dam, prepared for the Department of the Army, Seattle District, Corps of Engineers, Water Resources Engineers, Walnut Creek, California, January 1973, 63 p. and appendices.

Chen, C. W. and R. P. Shubinski, "Computer Simulation of Urban Storm Water Runoff," Journal of the Hydraulics Division, ASCE, Vol. 97, No. HY2, February 1971, pp. 289-301.

Chen, Gilbert K, L. T. Fan, and Larry F. Erickson, "Computer Software for Wastewater Treatment Plant Design," Journal of the Water Pollution Control Federation, Vol. 44, No. 5, May 1972, pp. 746-762.

Chien, J., and K. K. Saigal, "Urban Runoff by Linearized Subhydrograph Method," Journal of the Hydraulics Division, ASCE, Vol. 100, No. HY8, August 1974, pp. 1141-1157.

Chiu, C., and J. T. Huang, "Nonlinear Time Varying Model of Rainfall-Runoff Relation," Water Resources Research, AGU, Vol. 6, No. 5, October 1970, pp. 1277-1286.

Cleveland, J. G., G. W. Reid, and J. F. Harp, Evalution of Dispersed Pollutional Loads from Urban Areas, Bureau of Water Resources Research, University of Oklahoma, Normal, 1970, 213 p.

Cleveland, J. G., R. H. Ramsey, P. R. Walters, and G. L. Miessler, A Multi-Phasic Component Study to Predict Storm Water Pollution from Urban Areas, AVCO Economic Systems Corporation, Washington, D. C., 1970, 248 p.

Colston, N. V., Jr., Characterization and Treatment of Urban Land Runoff, EPA-670/2-74-096, National Environmental Research Center, EPA, Cincinnati, Ohio, December 1974, 157 p.

DaCosta, P. C. C., "Effect of Urbanization on Storm Water Peak Flows," Journal of the Sanitary Engineering Division, ASCE, Vol. 96, No. SA2, April 1970, pp. 187-193.

Dajani, J. S., R. S. Gemmell, and E. K. Morlok, "Optimal Design of Urban Wastewater Collection Networks," Journal of the Sanitary Engineering Division, ASCE, Vol. 98, No. SA6, December 1972, pp. 853-867.

Dajani, J. S., and Y. Hasit, "Capital Cost Minimization of Drainage Networks, Journal of the Environmental Engineering Division, ASCE, Vol. 100, No. EE2, April 1974, pp. 325-337.

Deininger, R. A., "Systems Analysis of Water Supply Systems," Water Resources Bulletin, AWRA, Vol. 6, No. 4, August 1970, pp. 573-579.

Dick, Richard I., "Role of Activated Sludge Final Settling Tanks," Journal of the Sanitary Engineering Division, ASCE, Vol. 96, No. SA2, April 1970, pp. 423-436.

Dick, Richard I., and Ali R. Javakeri, Discussion of "Unified Basis for Biological Treatment Design and Operation," by Lawerence and McCarty, Journal of the Sanitary Engineering Division, ASCE, Vol. 97, No. SA2, April 1971, pp. 234-238.

Dietz, A. L., "Computer Simulation of Recreational Boating Activities," Water Resources Bulletin, AWRA, Vol. 9, No. 3, June 1973, pp. 494-498.

Dracup, J. A., and T. J. Fogarty, "Optimal Planning for a Thermal Discharge Treatment System," Water Resources Research, Vol. 10, No. 1, February 1974, pp. 67-71.

Duckstein, L., M. M. Fogel, and C. C. Kiesel, "A Stochastic Model of Runoff-Producing Rainfall for Summer Type Storms," Water Resources Research, AGU, Vol. 8, No. 2, April 1972, pp. 410-421.

Dunne, T., and R. D. Black, "Runoff Processes During Snowmelt," Water Resources Research, AGU, Vol. 7, No. 5, October 1971, pp. 1160-1172.

Ecker, J. G., and J. R. McNamara, "Geometric Programming and the Preliminary Design of Industrial Waste Treatment Plants, Water Resources Research, Vol. 7, No. 1, February 1971, pp. 18-22.

Emsellem, Y., and G. Demarsily, "An Automatic Solution for the Inverse Problem," Water Resources Research, AGU, Vol. 7, No. 5, October 1971, pp. 1264-1283.

Enger, T., and C. C. Feng, "Flowgraph Analysis of Pipeline Networks," Journal of the Hydraulics Division, ASCE, Vol. 97, No. HY10, October 1971, pp. 1607-1624.

Engineering-Science, Inc., Characterization and Treatment of Combined Sewer Overflows, submitted by San Francisco Department of Public Works to the Federal Water Pollution Control Administration, November 1967, 139 p. and figures.

Engman, E. T., and A. S. Rogowski, "A Partial Area Model for Storm Flow Synthesis," Water Resources Research, AGU, Vol. 10, No. 3, June 1974, pp. 464-472.

Environmental Protection Agency, Storm Water Management Model, 4 Volumes, Washington, D.C., 1971. "Volume I-Final Report", "Volume II-Verification and Testing", "Volume III-User's Manual", "Volume IV-Program Listing".

Epp, R., and A. G. Fowler, "Efficient Code for Steady-State Flows in Networks," Journal of the Hydraulics Division, ASCE, Vol. 96, No. HY1, January 1970, pp. 43-56. Closure, Vol. 97, No. HY7, July 1971, pp. 1131-1132.

Evenson, D. E., and J. C. Moseley, "Simulation/Optimization Techniques for Multi-Basin Water Resources Planning," Water Resources Bulletin, Vol. 6, No. 5, October 1970, pp. 725-736.

Fan, L. T., L. E. Erickson, J. C. Baltes, and P. S. Shah, "Analysis and Optimization of Two-Stage Digestion," Journal of the Water Pollution Control Federation, Vol. 45, No. 4, April 1973, pp. 591-610.

Fair, G. M., and J. C. Geyer, Water Supply and Waste-Water Disposal, John Wiley & Sons, Inc., New York, 1954, 973.

Feigner, K. D., and H. S. Harris, Documentation Report--FWQA Dynamic Estuary Model, Federal Water Quality Administration, U.S. Department of the Interior, Washington, D.C., July 1970, 248 p.

Fisher, J. M., G. M. Karadi, and W. W. McVinnie, "Design of Sewer Systems," Water Resources Bulletin, AWRA, Vol. 7, No. 2 April 1971, pp. 294-302.

Frank D. Masch and Associates and the Texas Water Development Board, Simulation of Water Quality in Streams and Canals, Theory and Description of the QUAL-I Mathematical Model System, Texas Water Development Board Report No. 128, Austin, Texas, May 1971, 64 p.

Frenz, C. M., "Automated System Control," Journal of the American Water Works Association, Vol. 63, No. 8, August 1971, pp. 308-312.

Genet, L. A., D. J. Smith, and M. B. Sonnen, Computer Program Documentation for the Dynamic Estuary Model, prepared for the Environmental Protection Agency, Systems Development Branch, Water Resources Engineers, Walnut Creek, California, May 1974, 226 p.

Gibbs, C. V., S. M. Alexander, and C. P. Leiser, "System for Regulation of Combined Sewage Flows," Journal of the Sanitary Engineering Division, ASCE, Vol. 98, No. SA6, December 1972, pp. 951-972.

Gilman, H. D., M. Y. Goodman, and R. DeMoyer, Jr., "Replication Modeling for Water Distribution Control," Journal of the American Water Works Association, Vol. 65, No. 4, April 1973, pp. 255-260.

Glanz, D. J. and G. T. Orlob, Lincoln Lake Ecologic Study, prepared for U.S. Army Corps of Engineers, Louisville District, Water Resources Engineers, Springfield, Virginia, December 1973, 98 p.

Gotaas, H. B., and W. S. Galler, "Design Optimization for Biological Filter Models," Journal of the Environmental Engineering Division, ASCE, Vol. 99, No. EE6, December 1973, pp. 831-850.

Gracie, G., "Analysis of Distribution Demand Variations," Journal of the American Water Works Association, Vol. 58, No. 1, January 1966, pp. 51-67.

Grigg, N. S., J. W. Labadie, and H. G. Wenzel, Metropolitan Water Intelligence Systems, Completion Report - Phase III, Submitted to Office of Water Resources Research, Colorado State University, Fort Collins, June 1974, 258 p.

Guarino, Carmen, F., Harold D. Gilman, Michael D. Nelson, and Carl M. Koch, "Computer Control of Wastewater Treatment," Journal of the Water Pollution Control Federation, Vol. 44, No. 9, September 1972, pp. 1718-1729.

Heaney, J. P., W. C. Huber, H. Sheikh, J. R. Doyle, J. E. Darling, and W. A. Peltz, Final Report, Storm Water Management Model: Refinements, Testing, and Decision-Making, for the City of Lancaster, Pennsylvania and EPA, University of Florida, Gainesville, June 1973, 249 p.

Heeps, D. P., and R. G. Mein, "Independent Comparison of Three Urban Runoff Models," Journal of the Hydraulics Division, ASCE, Vol. 100, No. HY7, July 1974, pp. 995-1009.

Heinemann, H. G., and R. F. Piest, "Soil Erosion--Sediment Yield Research in Progress," EOS, Transactions, American Geophysical Union, Vol. 56, No. 3, March 1975, pp. 149-159.

Hinomoto, H., "Dynamic Programming of Capacity Expansion of Municipal Water Treatment System," Water Resources Research, AGU, Vol. 8, No. 5, October 1972, pp. 1178-1187.

Hittman Associates, Inc., Forecasting Municipal Water Requirements, Report HIT-413, Hittman Associates, Inc., Columbia, Maryland September 1969; Vol. I, "The MAIN II System," 208 p.; Vol. II, "The MAIN II System Users Manual," 425 p. (NTIS PB 190 275 and PB 190 276).

Hobbs, N., and J. D. Britton, Computer Modeling Applications in Urban Water Planning, ASCE Urban Water Resources Research Program Technical Memorandum No. 22, American Society of Civil Engineers, New York, March 1974, 31 p.

Hoffman, T. W., D. R. Woods, K. L. Murphy, and J. D. Norman, "Simulation of a Petroleum Refinery Waste Treatment Process," Journal of the Water Pollution Control Federation, Vol. 45, No. 11, November 1973, pp. 2321-2334.

Hoppel, S. K., and W. Viessman, Jr., "A Linear Analysis of an Urban Water Supply System," Water Resources Bulletin, AWRA, Vol. 8, No. 2, April 1972, pp. 304-311.

Huber, W. C., J. P. Heany, M. A. Medina, W. A. Peltz, H. Sheikh, and G. F. Smith, Storm Water Management Model User's Manual: Version II, National Environmental Research Center, Environment Protection Technology Series, No. EPA-670/2-75-017, Environmental Protection Agency, Cincinnati, March 1975, 350 p.

Huff, D. D., and P. Kruger, "Simulation of the Hydrologic Transport of Radioactive Aerosols," Advances in Chemistry Series No. 93, American Chemical Society, Washington, D. C., 1970, pp. 487-505.

Huff, F. A., "Spatial Distribution of Rainfall Rates," Water Resources Research, AGU, Vol. 6, No. 1, February 1970, pp. 254-260.

Huff, F. A., "Time Distribution Characteristics of Rainfall Rates," Water Resources Research, AGU, Vol. 6, No. 2, April 1970, pp. 447-454.

Jacoby, S. L. S., "Design of Optimal Hydraulic Networks," Journal of the Hydraulics Division, ASCE, Vol. 94, No. HY3, May 1968, pp. 641-661. Closure, Vol. 95, No. HY5, September 1969, pp. 1732-1735.

Jenkins, David, and Walter E. Garrison, "Control of Activated Sludge by Mean Cell Residence Time," Journal of the Water Pollution Pollution Control Federation, Vol. 40, No. 11, Part 1, November 1968, pp. 1905-1919.

Joeres, E. F., J. C. Liebman, and C. S. Revelle, "Operating Rules for Joint Operation of Raw Water Sources," Water Resources Research, AGU, Vol. 7, No. 2, April 1971, pp. 225-235.

Juknievich, J., and P. Richardson, "It's a Big Jump," Water and Wastes Engineering, Vol. 10, No. 6, June 1973, pp. 38-39.

Klei, H. E., and D. W. Sundstrom, "Automatic Control of an Activated Sludge Reactor," Journal of the Water Pollution Control Federation, Vol. 46, No. 5, May 1974, pp. 993-998.

Kugelman, I. J., "Water Reclamation and Reuse," Journal of the Water Pollution Control Federation, Vol. 46, No. 6, June 1974, pp. 1195-1199.

Lacroix, P. G., and D. G. Bloodgood, "Computer Simulation of Activated Sludge Plant Operation," Journal of the Water Pollution Control Federation, Vol. 44, No. 9, September 1972, pp. 1778-1788.

Lacroix, P. G., and D. G. Bloodgood, "Computer-Assisted Activated Sludge Plant Operation," Journal of the Water Pollution Control Federation, Vol. 44, No. 12, December 1972, pp. 2205-2217.

Lager, J. A., R. P. Shubinski, and L. W. Russell, "Development of a Simulation Model for Stormwater Management," Journal of the Water Pollution Control Federation, Vol. 43, No. 12, December 1971, pp. 2424-2435.

Lanyon, R. F., and J. Jackson, "Flow Simulation System," Journal of the Hydraulics Division, ASCE, Vol. 100, No. HY8, August 1974, pp. 1089-1105.

Lawrence, Alonzo W., and Perry L. McCarty, "Unified Basis for Biological Treatment Design and Operation," Journal of the Sanitary Engineering Division, ASCE, Vol. 96, No. SA3, June 1970, pp. 757-778.

Linsley, R. K., A Critical Review of Currently Available Hydrologic Models for Analysis of Urban Stormwater Runoff, Hydrocomp International, Palo Alto, California, August 1971, 83 p.

Mallory, C. W., The Beneficial Use of Storm Water, Final Report to U.S. Environmental Protection Agency, Environmental Protection Technology Series EPA-R2-73-139, Hittman Associates, Inc., Columbia, Maryland, January 1973, 266 p.

Mandeville, A. N., and T. O'Donnell, "Introduction of Time Variance to Linear Conceptual Catchment Models," Water Resources Research, AGU, Vol. 9, No. 2, April 1973, pp. 298-310.

McCuen, R. H., "A Sequential Decision Approach in Recreational Analysis," Water Resources Bulletin, AWRA, Vol. 9, No. 2, April 1973, pp. 219-230.

McPherson, M. B., and M. Heidari, "Power Consumption with Elevated Storage Compared to Direct and Booster Pumping," Journal of the American Water Works Association, Vol. 58, No. 12, December 1966, pp. 1585-1594.

McPherson, M. B., and R. Prasad, "Distribution System Equalizing Storage Hydraulics," Journal of the Hydraulics Division, ASCE, Vol. 92, No. HY6, November 1966, pp. 151-178. Closure, Vol. 94, No. HY2, March 1968, pp. 558-559.

McPherson, M. B., and R. Prasad, "Power Consumption for Equalizing-Storage Operating Options," Journal of the American Water Works Association, Vol. 58, No. 1, January 1966, pp. 67-90. Corrections, Vol. 58, No. 4, April 1966, p. 454.

McPherson, M. B., "Complete Automation--It's Still a Long Ways Off," Water and Wastes Engineering, Vol. 10, No. 6, June 1973, pp. 36-38.

McPherson, M. B., Feasibility of the Metropolitan Water Intelligence System Concept (Integrated Automatic Operational Control), ASCE Urban Water Resources Research Program, Technical Memorandum No. 15, New York, December 1971, 110 p. (NTIS PB 207 301).

McPherson, M. B., "Generalized Distribution Head Loss Characteristics," Transactions, ASCE, Vol. 126, Part I, 1961, pp. 1190-1234.

McPherson, M. B., "Ground Storage Booster Pumping Hydraulics," Journal of the American Water Works Association, Vol. 58, No. 3, March 1966, pp. 311-325.

McPherson, M. B., "Need for Metropolitan Water Balance Inventories", Journal of the Hydraulics Division, ASCE, Vol. 99, No. HY10, October 1973, pp. 1837-1848.

Mein, R. G., and C. L. Larson, "Modeling Infiltration During a Steady Rain," Water Resources Research, AGU, Vol. 9, No. 2, April 1973, pp. 384-394.

Merritt, L. B., and R. H. Bogan, "Computer-Based Optimal Design of Sewer Systems," Journal of the Environmental Engineering Division, ASCE, Vol. 99, No. EE1, February 1973, pp. 35-53.

Miller, C. R., and W. Viessman, Jr., "Runoff Volumes of Small Urban Watersheds," Water Resources Research, AGU, Vol. 8, No. 2, April 1972, pp. 429-434.

Minneapolis-St. Paul Sanitary District, Dispatching System for Control of Combined Sewer Losses, EPA Water Pollution Control Research Series 11020 FAQ 03/71, March 1971, 209 p.

Mishra, Prakash N., Liang-tseng Fan, and Larry E, Erickson, "Optimal Capacity Expansion of a Secondary Treatment System," Journal of the Water Pollution Control Federation, Vol. 46, No. 12, December 1974, pp. 2704-2718.

Montgomery-Water Resources Engineers, Water Wastewater and Flood Control Facilities Planning Model, submitted to San Diego Comprehensive Planning Organization, January 1974, 189 p.

Mulvihill, M. E., and J. A. Dracup, "Optimal Timing and Sizing of a Conjunctive Urban Water Supply and Waste Water System with Nonlinear Programming, Water Resources Research, Vol. 10, No. 2, April 1974, pp. 170-175.

Norton, W. R., L. A. Roesner, J. R. Monser and D. E. Evenson, Computer Program Documentation for the Stream Quality Model, QUAL-II, prepared for the Environmental Protection Agency, Systems Development Branch, Water Resources Engineers, Walnut Creek, California, May 1974, 84 p. plus listings and example.

Papadakis, C. N., and H. C. Preul, "Testing of Methods for Determination of Urban Runoff," Journal of the Hydraulics Division, ASCE, Vol. 99, No. HI9, September 1973, pp. 1319-1335.

Parkin, G. F., and R. R. Dague, "Optimal Design of Wastewater Treatment Systems by Enumeration," Journal of the Sanitary Engineering Division, ASCE, Vol. 98, No. SA6, December 1972, pp. 833-851.

Pitt, R. E., and R. Field, "Water Quality Effects from Urban Runoff," Presented to the American Water Works Association 94th Annual Conference, Boston, Massachusetts, June 16-21, 1974, Session Paper No. 4-4, Copyright June 1974 by AWWA, 14 p.

Preul, H. C., and C. Papadakis, Urban Runoff Characteristics, for the U.S. Environmental Protection Agency, University of Cincinnati, Cincinnati, Ohio, 1970, 340 p.

Radziul, J. V., "Automation and Instrumentation Committee's Purpose," Journal of the American Water Works Association, Vol. 63, No. 8, August 1971, pp. 467-469.

Rao, H. S., and D. W. Bree, Jr., Improved Methodology for Planning and Operation of Water Distribution Systems, Report to OWRT, Systems Control, Inc., Palo Alto, California (in press).

Rao, H. S., D. W. Bree, Jr., and R. Benzvi, Extended Period Simulation of Water Distribution Networks, Systems Control, Inc., Palo Alto, California, February 1974, 133 p. (NTIS PB 230 148).

Raudkivi, A. J., and N. Lawgun, "Generation of Serially Correlated Nonnormally Distributed Rainfall Durations," Water Resources Research, AGU, Vol. 8, No. 2, April 1972, pp. 398-409.

Raudkivi, A. J., and N. Lawgun, "Synthesis of Urban Rainfall," Water Resources Research, AGU, Vol. 6, No. 2, April 1970, pp. 455-464.

Riordan, C., "General Multistage Marginal Cost Dynamic Programming Model for the Optimization of a Class of Investment-Pricing Decisions," Water Resources Research, Vol. 7, No. 2, April 1971, pp. 245-253.

Riordan, C., "Multistage Marginal Cost Model of Investment-Pricing Decisions: Application to Urban Water Supply Treatment Facilities," Water Resources Research, AGU, Vol. 7, No. 3, June 1974, pp. 463-478.

Roesler, J. F., R. Smith, and R. G. Eilers, "Simulation of Ammonia Stripping from Wastewater," Journal of the Sanitary Engineering Division, ASCE, Vol. 97, No. SA3, June 1971, pp. 269-286.

Roesner, L. A., J. R. Monser and D. E. Evenson, Computer Program Documentation for the Stream Quality Model QUAL-II, prepared for the Environmental Protection Agency, Systems Development Branch, Water Resources Engineers, Walnut Creek, California, May 1973, 84 p. and listings and example.

Roesner, L. A., H. M. Nichandros, R. P. Shubinski, A. D. Feldman, J. W. Abbott, and A. O. Friedland, A Model for Evaluating Runoff-Quality in Metropolitan Master Planning, ASCE Urban Water Resources Research Program Technical Memorandum No. 23, American Society of Civil Engineers, New York, pril 1974, 73 p.

Salas-LaCruz, J. D., and V. Yevjevich, Stochastic Structure of Water Use Time Series, Colorado State University, Hydrology Paper No. 52, June 1972, 71 p.

Sartor, J. D., and G. B. Boyd, Water Pollution Aspects of Street Surface Contaminants, EPA-R2-72-081, Prepared for Office of Research and Monitoring, EPA, Washington, D.C., November 1972, 236 p.

Scarato, R. F., "Time-Capacity Expansion of Urban Water Systems," Water Resources Research, AGU, Vol. 5, No. 5, October 1969, pp. 929-936.

Schaake, J. C., Jr., and D. C. Major, "Model for Estimating Regional Water Needs," Water Resources Research, AGU, Vol. 8, No. 3, June 1972, pp. 755-759.

Shamir, U., "Optimal Design and Operation of Water Distribution Networks," Water Resources Research, AGU, Vol. 10, No. 1, February 1974, pp. 27-36.

Shamir, U., Water Distribution Systems Analysis, Report RC 4389, IBM, Thomas J. Watson Research Center, Yorktown Heights, New York, June 13, 1973, over 200 p.

Shih, C. S., and J. A. DeFilippi, "System Optimization of Waste Treatment Plant Process Design," Journal of the Sanitary Engineering Division, ASCE, Vol. 96, No. SA2, April 1970, pp 409-421.

Singh, K. P. and C. G. Lonnquist, "Water Treatment Plant Staging Policy," Water Resources Bulletin, AWRA, Vol. 8, No. 2, April 1972, pp. 239-249.

Smith, D. W., "Computer Design of CMAS Systems," Journal of the Sanitary Engineering Division, ASCE, Vol. 96, No. SA4, August 1970, pp. 977-990.

Smith, F. L., Jr., "The Urban Water System--A Comprehensive Analysis," Thesis presented to the University of Denver, at Denver, Colorado, 1972, in partial fulfillment of the requirements for the degree of Master of Science.

Smith, Robert, Preliminary Design and Simulation of Conventional Wastewater Renovation Systems Using the Digital Computer, Water Pollution Control Research Series Report WP-20-9, Federal Water Pollution Control Administration, Cincinnati, Ohio, March 1968, 64 p. and appendix.

Sonnen, M. B., "Quality Related Costs of Regional Water Users," Journal of the Hydraulics Division, ASCE, Vol. 99, No. HY10, October 1973, pp. 1849-1864. Closure, Vol. 101, No. HY4, April 1975, pp. 407-408.

Sullivan, Richard H., "Letters," Journal of the Water Pollution Control Federation, Vol. 46, No. 8, August 1974, p. 537a.

Systems Control, Inc., Use of Mathematical Models for Water Quality Planning, Water Resources Information System Technical Bulletin No. 3, State of Washington, Department of Ecology, June 1974, 212 p.

Texas Water Development Board, Stochastic Optimization and Simulation Techniques for Management of Regional Water Resource Systems, TWDB Report No. 131, Austin, Texas, July 1971, 129 p.

Tihansky, Dennis P., "Historical Development of Water Pollution Control Cost Functions," Journal of the Water Pollution Control Federation, Vol. 46, No. 5, May 1974, pp. 813-833.

Tihansky, D. P., "Damage Assessment of Household Water Quality," Journal of the Environmental Engineering Division, ASCE, Vol. 100, No. EE4, August 1974, pp. 905-918.

Trotta, P. D., "On-line Adaptive Control for Combined Sewer Systems," thesis presented to Colorado State University, at Fort Collins, Colorado, 1975, in partial fulfillment of the requirements for the degree of Doctor of Philosophy.

U. S. Army Corps of Engineers, Urban Runoff: Storage, Treatment, and Overflow Model "STORM", Draft Generalized Computer Program 723-58-2250, Hydrologic Engineering Center, Davis, California, September 1973, 62 p.

Van Dyke, R. P., "Computerized Operation of Distribution Systems," Journal of the American Water Works Association, Vol. 62, No. 4, April 1970, pp. 234-240.

Viessman, W., Jr., W. R. Keating, and K. N. Srinivasa, "Urban Storm Runoff Relations," Water Resources Research, AGU Vol. 6, No. 1, February 1970, pp. 275-279.

Vitale, A. M., and P. M. Sprey, Total Urban Water Pollution Loads: The Impact of Storm Water, Prepared for the Council on Environmental Quality, Enviro-Control, Inc., Rockville, Maryland, 1974, 183 p.

Voshel, Doris, and J. G. Sak, "Effect of Primary Effluent Suspended Solids and BOD on Activated Sludge Production," Journal of the Water Pollution Control Federation, Vol. 40, No. 5, Part 2, May 1968, pp. R203-R212.

Walsh, S., and L. C. Brown, "Least Cost Method for Sewer Design," Journal of the Environmental Engineering Division, ASCE, Vol. 99, No. EE3, June 1973, pp. 333-345.

Water Resources Engineers, An Investigation of Salt Balance in the Upper Santa Ana River Basin, presented to the State Water Resources Control Board and the Santa Ana River Basin Regional Water Quality Control Board, March 1969, 198 p.

Water Resources Engineers, Comprehensive System Engineering Analysis of All Aspects of Urban Water . . . A Prefeasibility Study, Prepared for the ASCE Urban Water Resources Research Program, Water Resources Engineers, Walnut Creek, California, July 1968, 121 p.

Water Resources Engineers, Computer Program Documentation for the Dynamic Estuary Model, prepared for the Florida Department of Pollution Control, Water Resources Engineers, Austin, Texas, September 1974, 234 p.

Water Resources Engineers, Systems Analysis for Urban Water Management, Prepared for the Office of Water Resources Research, Through the ASCE Urban Water Resources Research Program, Water Resources Engineers, Walnut Creek, California, September 1970, 78 p.

Weddle, C. L., S. K. Mukherjee, J. W. Porter, and H. P. Skarheim, "Mathematical Model for Water-Wastewater Systems," Journal of the American Water Works Association, Vol. 62, No. 12, December 1970, pp. 769-775.

Wenzel, H. G., and B. H. Bradford, Control Strategy Development Study, San Francisco Master Plan, Colorado State University, Ft. Collins, August 1974, 138 p.

Whipple, W., J. V. Hunter, and S. L. Yu, "Unrecorded Pollution from Urban Runoff," Journal of the Water Pollution Control Federation, Vol. 46, No. 5, May 1974, pp. 873-885.

Whipple, William, Jr., "Letters," Journal of the Water Pollution Control Federation, Vol. 46, No. 11, November 1974, p. 809a.

Whitford, P. W., "Residential Water Demand Forecasting," Water Resources Research, AGU, Vol. 8, No. 4, August 1972, pp. 829-839.

Wiebel, S. R., R. J. Anderson, and R. L. Woodward, "Urban Land Runoff as a Factor in Stream Pollution, Journal of the Water Pollution Control Federation, Vol. 36, No. 7, July 1964 pp. 914-924.

Winiarski, L. D., and B. A. Tichenor, "Model of Natural Draft Cooling Tower Performance," Journal of the Sanitary Engineering Division, ASCE, Vol. 96, No. SA4, August 1970, pp. 927-943.

Wiseman, R. A., and M. B. McPherson, A Study of the Applicability of Generalized Distribution Network Head Loss Characteristics, Civil Engineering Studies, Hydraulic Engineering Series No. 7, University of Illinois, Urbana, June 1965, 42 p. and appendices.