EPA-453/R-00-003

Background Information Document

National Emission Standards For Hazardous Air Pollutants (NESHAP) for the Wood Building Products (Surface Coating) Industry

Emission Standards Division

U. S. Environmental Protection Agency
Office of Air and Radiation
Office of Air Quality Planning and Standards
Research Triangle Park, NC 27711

May 2001

Table of Contents

Page

Chapter 1. Introduction 1-1
Overview 1.0 1-1
Background 1.1 1-2
Summary of Existing Federal/State/Local Regulations 1.2 1-3
Project History 1.3 1-5
Data Gathering 1.3.1 1-5
Emissions and Control Data 1.3.2 1-9
References 1.4 1-9

Chapter 2. Wood Building Products--Surface Coating Source Category 2-1
Industry Profile 2.0 2-1
Wood Building Products Surface Coating Processes 2.1 2-4
Interior Paneling 2.1.1 2-9
Paper Laminated Paneling 2.1.1.1 2-9
Printed Interior Paneling 2.1.1.2 2-9
Natural Finish Interior Paneling 2.1.1.3 2-10
Exterior Siding 2.1.2 2-12
Doors and Door Skins 2.1.3 2-12
Solid Wood Doors 2.1.3.1 2-13
Hollow Core Doors 2.1.3.2 2-13
Tileboard 2.1.4 2-15
Flooring 2.1.5 2-15
Window Frames and Joinery 2.1.6 2-15
Shutters 2.1.7 2-16
Moulding and Trim 2.1.8 2-16
Coatings 2.2 2-18
Coating Technologies 2.2.1 2-18
Solventborne Coatings 2.2.1.1 2-18
High-Solids Coatings 2.2.1.2 2-18
Waterborne Coatings 2.2.1.3 2-19
Ultraviolet Radiation-Cured (UV-Cured) Coatings 2.2.1.4 2-20
Electron-Beam (EB) Curable Coatings 2.2.1.5 2-21
Characterization of HAP Emissions 2.3 2-21
HAP Emissions 2.3.1 2-21
Organic HAP Emission Sources and Emission Reduction Techniques 2.3.2 2-25
Surface Preparation 2.3.2.1 2-25
Storage Areas 2.3.2.2 2-25
Waste and Wastewater Operations 2.3.2.3 2-26
Mixing Operations 2.3.2.4 2-26
Subcategorization 2.4 2-27
Subcategory Descriptions 2.4.1 2-28
Doors and Windows 2.4.1.1 2-28

Table of Contents (continued)

Page

Flooring 2.4.1.2 2-28
Interior Wall Paneling and Tileboard 2.4.1.3 2-29
Other Interior Panels 2.4.1.4 2-29
Exterior Siding, Doorskins, and Miscellaneous 2.4.1.5 2-29
Performance Requirements 2.4.2 2-30
Doors and Windows 2.4.2.1 2-30
Flooring 2.4.2.2 2-31
Interior Wall Paneling and Tileboard 2.4.2.3 2-31
Other Interior Panels 2.4.2.4 2-32
Exterior Siding, Doorskins, and Miscellaneous 2.4.2.5 2-32
Coating Usage 2.4.3 2-33
Doors and Windows 2.4.3.1 2-33
Flooring 2.4.3.2 2-34
Interior Wall Paneling and Tileboard 2.4.3.3 2-34
Other Interior Panels 2.4.3.4 2-35
Exterior Siding, Doorskins, and Miscellaneous 2.4.3.5 2-35
Organic HAP Emissions 2.4.4 2-35
Doors and Windows 2.4.4.1 2-36
Flooring 2.4.4.2 2-36
Interior Wall Paneling and Tileboard 2.4.4.3 2-36
Other Interior Panels 2.4.4.4 2-37
Exterior Siding, Doorskins, and Miscellaneous 2.4.4.5 2-37
Application Equipment 2.4.5 2-37
Doors and Windows 2.4.5.1 2-37
Flooring 2.4.5.2 2-38
Interior Wall Paneling and Tileboard 2.4.5.3 2-38
Other Interior Panels 2.4.5.4 2-38
Exterior Siding, Doorskins, and Miscellaneous 2.4.5.5 2-38
Control Device Applicability 2.4.6 2-38
Doors and Windows 2.4.6.1 2-38
Flooring 2.4.6.2 2-38
Interior Wall Paneling and Tileboard 2.4.6.3 2-38
Other Interior Panels 2.4.6.4 2-38
Exterior Siding, Doorskins, and Miscellaneous 2.4.6.5 2-40
Conclusions and Subcategorization Rationale 2.4.7 2-40
Doors and Windows 2.4.7.1 2-40
Flooring 2.4.7.2 2-41
Interior Wall Paneling and Tileboard 2.4.7.3 2-41
Other Interior Panels 2.4.7.4 2-42
Exterior Siding, Doorskins, and Miscellaneous 2.4.7.5 2-43
References 2.5 2-44

Table of Contents (continued)

Page

Chapter 3. Emission Control Techniques 3-1
Pollution Prevention Techniques 3.1 3-2
Waterborne Coatings 3.1.1 3-3
Radiation-Curable Coatings 3.1.2 3-6
Ultraviolet-Curable Coatings 3.1.2.1 3-7
Electron Beam-Curable Coatings 3.1.2.2 3-8
Applicability of Low- and No-HAP Coatings 3.1.3 3-9
Waterborne Coatings 3.1.3.1 3-9
Ultraviolet-Curable Coatings 3.1.3.2 3-10
Electron Beam-Curable Coatings 3.1.3.3 3-11
Capture Systems 3.2 3-12
Add-On Control Devices 3.3 3-13
Combustion Control Devices 3.3.1 3-14
Thermal Incineration 3.3.1.1 3-14
Catalytic Incineration 3.3.1.2 3-18
Recovery Devices 3.3.2 3-20
Carbon Adsorption 3.3.2.1 3-21
References 3.4 3-27

Chapter 4. Model Plants and Control Options 4-1
Introduction 4.0 4-1
Model Plants 4.1 4-2
Model Plant 1 – Doors and Windows 4.1.1 4-3
Model Plant 2 – Flooring 4.1.2 4-3
Model Plant 3 – Interior Wall Paneling and Tileboard 4.1.3 4-4
Model Plant 4 – Other Interior Panels 4.1.4 4-4
Model Plant 5 – Exterior Siding, Doorskins, and Miscellaneous 4.1.5 4-4
Model Plant Parameters 4.2 4-9
Maximum Achievable Control Technology Floors 4.3 4-10
References 4.4 4-12

Chapter 5. Summary of Environmental and Energy Impacts 5-1
Primary Air Impacts 5.1 5-2
Secondary Environmental Impacts 5.2 5-7
Secondary Air Impacts 5.2.1 5-7
Secondary Water Impacts 5.2.2 5-8
Secondary Solid Waste Impacts 5.2.3 5-8
Energy Impacts 5.3 5-8

Table of Contents (continued)

Page

Chapter 6. Model Plant Control Costs 6-1
Introduction 6.0 6-1
Cost Estimates Using Low- or no-HAP Coatings 6.1 6-2
Material Costs 6.1.1 6-2
Recordkeeping and Reporting Costs 6.1.2 6-4
Labor Costs 6.1.2.1 6-4
Computer Equipment Costs 6.1.2.2 6-7
Performance Testing Costs for Add-On Control Devices 6.1.3 6-7
Doors and Windows (Model Plant 1) 6.2 6-11
Flooring (Model Plant 2) 6.3 6-12
Interior Wall Paneling and Tileboard (Model Plant 3) 6.4 6-12
Other Interior Panels (Model Plant 4) 6.5 6-12
Exterior Siding, Doorskins and Miscellaneous (Model Plant 5) 6.6 6-15
Cost Effectiveness of Low- or no-HAP Coatings 6.7 6-15
Annual Cost for Low- or no-HAP Coatings 6.8 6-15
Small Business Impact (Low- or no-HAP Coatings) 6.9 6-16
"Beyond the Floor" Cost Estimates 6.10 6-18
Equipment Costs 6.10.1 6-18
Operating Costs 6.10.2 6-19
Recordkeeping and Reporting Costs 6.10.3 6-19
Computer Costs 6.10.4 6-20
Performance Testing Costs 6.10.5 6-20
"Beyond the Floor" Costs Estimates 6.11 6-21
Windows and Doors Subcategory 6.11.1 6-21
Flooring Subcategory 6.11.2 6-21
Interior Paneling and Tileboard Subcategory 6.11.3 6-21
Other Interior Panels Subcategory 6.11.4 6-21
Exterior Siding, Doorskins, and Miscellaneous Subcategory 6.11.5 6-21
Cost Effectiveness for "Beyond the Floor" Option 6.12 6-22
Annual Costs for "Beyond the Floor" Option 6.13 6-22
Small Business Impact ("Beyond the Floor" Option) 6.14 6-22
Comparison of Cost Options 6.15 6-28
Reference 6.16 6-28

List of Figures

Page

Figure 2-1. Simplified Curtain and Roll Coater Diagrams 2-7
Figure 2-2. Simplified Flow, Vacuum, and Pneumatic Coater Diagrams 2-8
Figure 2-3. Generic Coating Line Schematic for Prefinished Interior Lauan Plywood Paneling. 2-11
Figure 2-4. Generic Coating Line Schematic for Prefinished Molded Doors and Door Skins 2-14
Figure 2-5. Generic Coating Line Schematic for Prefinished Woodgrain Moulding. 2-17
Figure 3-1. Thermal Incinerator--General Case 3-15
Figure 3-2. Regenerable-Type Thermal Incinerator 3-18
Figure 3-3. Schematic of a Typical Catalytic Incineration System 3-19
Figure 3-4. Typical Carbon Adsorber Operating Continuously with Two Fixed Beds 3-25

List of Tables

Page

Table 1-1. Recommended RACT Limits from the CTG for the Factory Surface Coating of Flatwood Paneling 1-4
Table 1-2. Summary of California AQMD VOC Limits 1-4
Table 1-3. State Regulations for the Surface Coating of Wood Building Products 1-7
Table 2-1. SIC Codes Representing the Wood Building Products Industry 2-3
Table 2-2. SIC Codes Representing the Wood Building Products Surface Coating Industry Survey 2-3
Table 2-3. Primary Organic HAP Emitted by the Wood Building Products Industry 2-23
Table 2-4. Organic HAP Emissions by SIC Code 2-24
Table 2-5. Primary Organic HAP Emitted by Surface Coating of Wood Building Products 2-24
Table 3-1. Emission Reduction Techniques Used by Coating Process/End Use 3-4
Table 3-2. Add-On Control Efficiencies Currently Achieved by End-Use Product 3-13
Table 4-1. Summary of Wood Building Product (Surface Coating) Model Plants 4-3
Table 4-2. Doors and Windows Subcategory 4-5
Table 4-3. Flooring Subcategory 4-6
Table 4-4. Interior Wall Paneling and Tileboard Subcategory 4-6
Table 4-5. Other Interior Panels Subcategory 4-7
Table 4-6. Exterior Siding, Doorskins, and Miscellaneous 4-8
Table 4-7. Model Plant Coating and Solvent Use Profile 4-10
Table 4-8. Overall Facility Organic HAP Emission Limits by Subcategory 4-12
Table 5-1. Summary of Primary Air Impacts-Existing Sources 5-3
Table 5-2. Summary of Doors and Windows Air Impacts 5-3
Table 5-3. Summary of Flooring Air Impacts 5-4
Table 5-4. Summary of Interior Wall Paneling and Tileboard Air Impacts 5-4
Table 5-5. Summary of Other Interior Panels Air Impacts 5-5

List of Tables (continued)

Page

Table 5-6. Summary of Exterior Paneling, Doorskins, and Miscellaneous Air Impacts 5-6
Table 6-1. Labor Rates for Recordkeeping and Reporting 6-6
Table 6-2. Recordkeeping and Reporting Labor Requirements 6-9
Table 6-3. Computer Equipment Cost Summary 6-11
Table 6-4. Summary of Recordkeeping and Reporting Costs 6-11
Table 6-5. Doors and Windows (Model Plant 1) MACT Costs 6-13
Table 6-6. Flooring (Model Plant 2) MACT Costs 6-13
Table 6-7. Interior Wall Paneling and Tileboard (Model Plant 3) MACT Costs 6-13
Table 6-8. Other Interior Paneling (Model Plant 4) MACT Costs 6-14
Table 6-9. Exterior Siding, Doorskins, and Miscellaneous (Model Plant 5) MACT Costs . 6-14
Table 6-10. Cost Effectiveness of MACT 6-17
Table 6-11. "Beyond the Floor" Cost Options for Doors and Windows 6-23
Table 6-12. "Beyond the Floor" Cost Options for Flooring 6-24
Table 6-13. "Beyond the Floor" Cost Options for Interior Wall Paneling and Tileboard 6-24
Table 6-14. "Beyond the Floor" Cost Options for Other Interior Paneling 6-25
Table 6-15. "Beyond the Floor" Cost Options for Exterior Siding, Doorskins, and Miscellaneous 6-26
Table 6-16. "Beyond the Floor" Cost Effectiveness 6-27

Chapter 1
Introduction

1.0 OVERVIEW

Section 112 of the Clean Air Act (CAA) requires the U. S. Environmental Protection Agency (EPA) to establish emission standards for all categories of sources of hazardous air pollutants (HAP). The national emission standards for hazardous air pollutants (NESHAP) must represent the maximum achievable control technology (MACT) for all major sources. The CAA defines a major source as:

> ". . . any stationary source or group of stationary sources located within a contiguous area and under common control that emits or has the potential to emit, in the aggregate, 10 tons per year or more of any hazardous air pollutant or 25 tons per year or more of any combination of hazardous air pollutants."

The initial source category list was published on July 16, 1992 (57FR31576) and "Flat Wood Paneling (Surface Coating)" was included as a source category.[1] After initial meetings with industry trade groups and stakeholders, the EPA learned that interior paneling products are no longer manufactured in large quantities in the United States (U. S.). The EPA also discovered that there are other wood panel and related building materials with surface coating operations resulting in significant organic HAP emissions that are not addressed in current or future regulations. In promoting the CAA objectives to enhance the Nation's air quality and the productive capacity of its population, the EPA decided to revise the scope to cover the surface coating of all wood building products, and proposed the name of the source category to be

changed to "Wood Building Products (Surface Coating)." The change from "Flat Wood Paneling (Surface Coating)" to "Wood Building Products (Surface Coating)" was published on November 18, 1999 (see 64 FR 63025).

The purpose of this document is to summarize the background information gathered during the development of the wood building products (surface coating) NESHAP.. The following sections provide additional details on the background of the wood building products (surface coating) source category, a summary of existing Federal/State/local regulations, and a brief summary of the project history.

1.1 BACKGROUND

The wood building products surface coating industry may be divided according to the end use of the wood building product produced and the performance requirements of the surface coatings used. Initially, the wood building products surface coating industry was divided into four industry segments based on primary products: premanufactured homes; panel and reconstituted wood products; wood windows and doors; and flooring, architectural/specialty millwork, and miscellaneous. A fifth segment, designated as "small business" facilities, was added in an attempt to receive representative input from small businesses across the regulated industry.[2]

The segments identified were found to vary further based on end use of the final product, performance requirements of the coatings used, and surface coating processes. Some facilities manufacture numerous products, while some manufacture only panels that are then sold to other companies for final processing. The performance requirements (i.e., the number of coatings a product receives) are determined by its end use. Substrates that are finished again after field installation (e.g., exterior siding) are typically only primed and sold to distributors after which building contractors or homeowners apply architectural coatings which are formulated for consumer use. High end products (e.g., interior wall paneling and doors and windows) typically receive numerous coatings.[3]

Types of coatings used in the wood building products surface coating industry include, but are not limited to, fillers, sealers, groove coats, primers, stains, basecoats, inks, and topcoats. Typical coating application methods include spraying, roll coating, rotogravure cylinder, curtain coating, flow coating, pneumatic (air knife) coating, brush coating, vacuum coating, and dip coating.[3] Further explanation of the various wood building products surface coating industry segments and the coating operations associated with each is provided in Chapter 2.

Organic HAP are present in many of the coatings applied to wood building products during surface coating operations. There are also organic HAP present in some of the thinning solvent and cleaning materials associated with surface coating operations. Xylene makes up almost 50 percent of the organic HAP emitted by the wood building products surface coating industry. Glycol ethers are also a substantial part of the organic HAP emitted by the industry.[4] The organic HAP associated with various wood surface coating technologies and industry segments are further discussed in Chapter 2.

1.2 SUMMARY OF EXISTING FEDERAL/STATE/LOCAL REGULATIONS

The EPA published a control techniques guidelines document (CTG) for controlling volatile organic compound (VOC) emissions from factory surface coating of flat wood paneling in 1978 (EPA-450/2-78-032).[5] The CTG recommended emission limits for all coating operations based on reasonably available control technology (RACT). Table 1-1 summarizes these limits, which are expressed in pounds of VOC emitted per 1,000 square feet (lb VOC/1,000 ft^2) of coated surface. These limits can be achieved by either using coatings with VOC content equal to or less than the limits or by reducing the level of VOCs actually emitted to these levels using add-on controls. Other significant categories of factory finished flat wood products—exterior siding, tileboard, and particleboard used as a furniture component—were not reviewed and no emission limitations were suggested.

Table 1-1. Recommended RACT Limits from the CTG for the Factory Surface Coating of Flatwood Paneling

Product	Emission rate limit, lb VOC/1,000 ft^2	Equivalent coating limit, lb VOC/gallon, less water (lb VOC/gal-water)
Printed interior wall panels made of hardwood plywood and thin particleboard	6.0	2.5
Natural finish hardwood plywood panels	12.0	3.3
Class II hardboard panels	10.0	2.8

Most State VOC rules are at exactly these levels, at least for nonattainment areas within the State. However, a few local and regional agencies, such as California's Bay Area and South Coast air quality management districts (AQMDs), have adopted stricter standards.[6,7] The South Coast limits also affect the surface coating of exterior wood siding. In addition to exterior wood siding, the Bay Area limits affect baseboards, veneers, doors, doorskins, wood flat product skins, tileboard, and wall board. Table 1-2 summarizes the Bay Area and South Coast AQMD VOC limits.

Table 1-2. Summary of California AQMD VOC Limits

Affected operations	VOC limit, lbs per gal of coating, less water	
	Bay Area AQMD	South Coast AQMD[a]
Wood Flat Stock Coating	2.1	2.1
Adhesive	2.1	2.1
Inks	2.1	2.1

[a] South Coast AQMD also has a list of "exempt" solvents that may be subtracted from the VOC total.

In addition to the air emission limits on coating operations, the South Coast AQMDs also regulate cleaning operations. For example, wood building product solvent cleaning of application equipment, parts, products, tools, machinery, equipment, general work areas, and the storage and disposal of VOC containing materials used in solvent cleaning operations, shall be carried out pursuant to Rule 1171. Rule 1171 limits the vapor pressure of solvents used and the cleaning methods that can be used, requires the use of covered nonporous containers, and prohibits the use

of propellants. The South Coast AQMD also allows facilities to use add-on controls that achieve at least 90 percent capture and 95 percent destruction as an alternative to work practices. The Bay Area allows facilities to use add-on controls to control the emission to the atmosphere to an equivalent level with an abatement device efficiency of at least 90 percent and meets the requirements of Regulation 2.

Table 1-3 summarizes other state regulations for wood building products surface coating operations. In addition to VOC regulations, many states have their own air toxics programs that may apply to wood building products surface coating operations. These regulations typically regulate a large number of chemical compounds. Many States have their own list of air toxics, many of which are also designated as HAP under the CAA. These air toxic regulations typically specify allowable fenceline concentrations for the individual air toxics. If a facility's annual emissions of a regulated compound exceed a specified level, the state may require a facility to perform dispersion modeling to determine whether the allowable concentration is exceeded at any point beyond the fenceline. The decision to require modeling depends on several factors, including the toxicity of the pollutant, its status as a HAP or VOC, the attainment status of the location, and other considerations. If emissions exceed the allowable concentration, the facility must reduce emissions.

1.3 PROJECT HISTORY

1.3.1 Data Gathering

In 1998, an information collection request (ICR) was developed by the EPA and approved by the Office of Management and Budget (OMB) to determine the coating usage, controls, and HAP emissions associated with wood building products surface coating operations.[8] In July of 1998, the ICR was sent to 45 U. S. wood building product companies expected to have numerous facilities with surface coating operations. Responses were received from 33 of the wood building product companies, representing 126 facilities.

In addition to information obtained from these questionnaires, site visits were made to wood building product surface coating operations. Also, EPA has met with numerous trade

organizations and industry representatives throughout the rule development process. The primary trade associations involved with the wood building products (surface coating) NESHAP are the American Plywood Association (APA)-The Engineered Wood Association, Composite Panel Association (CPA), National Wood Window and Door Association (NWWDA), Hardwood Plywood and Veneer Association (HPVA), American Forest and Paper Association (AFPA), National Wood Flooring Association (NWFA), National Oak Flooring Association (NOFA), Architectural Woodworking Institute (AWI), American Hardboard Association (AHA), Manufactured Housing Institute (MHI), Wood Moulding and Millwork Producers Association (WMMPA), Laminating Materials Association (LMA), Adhesives and Sealants Council, National Paint and Coatings Association (NPCA), and the Chemical Manufacturers Association (CMA) Solvents Council.

Based on data obtained from the Toxics Chemical Release Inventory (TRI) data base, the Census of Manufacturers, trade associations, and industry meetings, the number of wood building product facilities in the U. S. is estimated to be more than 1,500. However, it is unknown how many of the estimated 1,500 wood building product facilities actually perform surface coating.

Table 1-3. State Regulations for the Surface Coating of Wood Building Products[a]

State	California, Bay Area	Delaware	Wisconsin	North Carolina	New York	Washington
Regulation No.	Rule 238	RgAP24\sc23(a)	NR 422	R5A\ch2\sh2d\rl.0935	Rti6\ch3\shA\pt228	WAC 173-490-025
Applicability cutoff	Coating use <20 gal/yr	Coating use <15 lb/d	Paneling emissions <100 ton/yr Adhesive emissions <15 lb/month Adhesive use <1 pint/d	None specified	Coating use <55 gal/yr and does not exceed 5% of the facility's total annual potential to emit	Emissions <40 lb/month
VOC content limitations for coatings	Flat wood coatings, adhesives, and inks <2.1 lb/gal	None specified	Adhesives contain 23% solids by weight Adhesive emissions <4.5 lb/gal Wood door coating emissions <5.7 lb/gal Molded wood parts prime coat <2.5 lb/gal topcoat <3.5 lb/gal	None specified	Interior panels (hardwood, plywood, thin particleboard) 2.5 lb/gal Natural finish hardwood panels 3.3 lb/gal Hardboard paneling 3.6 lb/gal	None specified
VOC emission limits	None specified	Interior panels (hardwood, plywood, thin particleboard) 6 lb/1,000 ft^2 Natural finish hardwood panels 12 lb/1,000 ft^2 Hardwood panels of Class II finish 10 lb/1,000 ft^2	Interior panels (hardwood, plywood, thin particleboard) 6 lb/1,000 ft^2 Natural finish hardwood panels 12 lb/1,000 ft^2 Hardboard paneling of Class II finish 10 lb/1,000 ft^2	Interior panels (hardwood plywood, thin particleboard) 6 lb/1,000 ft^2 Natural finish hardwood panels 12 lb/1,000 ft^2 Hardboard paneling of Class II finish 10 lb/1,000 ft^2	None specified	Interior panels (hardwood, plywood, thin particleboard) 6 lb/1,000 ft^2 Natural finish hardwood panels 12 lb/1,000 ft^2 Hardboard paneling of Class II finish 10 lb/1,000 ft^2

Table 1-3. Continued

State	California, Bay Area	Delaware	Wisconsin	North Carolina	New York	Washington
Alternative compliance methods	Emission control system with overall efficiency of 90% by weight	Emission control system with overall efficiency of 95% by weight	Emission control system with overall efficiency of 90% by weight	None specified	Emission control system with overall efficiency of 80% by weight	Emission control system with overall efficiency of 90% by weight
Allowable application equipment	Electrostatic High volume, low pressure (HVLP) spray Hand roller Flow coat Roll coater Dip coater Paint brush Detailing or touch-up operation guns	None specified	None specified	None specified	None specified	None specified
Exemptions	Wood stock intended to be used as furniture or cabinet components	None specified	Exterior siding Tileboard Particleboard used as furniture	None specified	None specified	Exterior siding Tileboard or Particleboard used as furniture components

[a] Other States have regulations similar to the 1978 CTG (Control of Volatile Organic Emissions from Existing Stationary Sources Volume VII: Factory Surface Coating of Flatwood Paneling), reference the 1978 CTG directly in the State regulation, or have a general surface coating regulation not specific to the surface coating of wood building products.

1.3.2 Emissions and Control Data

The available organic HAP emissions and control information for wood building products surface coating operations has been summarized in Chapters 2 and 3. Most of the information collected is based on calendar year 1997 and is representative of current practices. In some segments of the industry, coating operations have shifted away from high-HAP coatings to low- or no-HAP coatings. Control efficiency data are relevant to current conditions for the purpose of MACT determination.

1.4 REFERENCES

1. U. S. Environmental Protection Agency. Documentation for Developing the Initial Source Category List: Final Report. Publication No. EPA-450/3-91-030. Research Triangle Park, NC. July 1992.

2. Almodovar, P., EPA/CCPG to Project File. List of facilities and industry segments for the information collection request (ICR) for the development of the Wood Building Product NESHAP. June 11, 1998.

3. U. S. Environmental Protection Agency. Preliminary Industry Characterization: Wood Building Products Surface Coating. Publication No. EPA-453/R-00-004. Research Triangle Park, NC. September 1998.

4. Threatt, B., MRI, to Lluberas, L., EPA/CCPG. November 10, 2000. Documentation of Database Containing Information from Section 114 Responses and Site Visits for the Wood Building Products (Surface Coating) NESHAP.

5. U. S. Environmental Protection Agency. Control Technique Guidelines. Publication No. EPA-450/2-78-032. Research Triangle Park, NC. June 1998.

6. Bay Area (California) Air Quality Management District Regulation 8, Organic Compounds, Rule 23 - Coating of Flat Wood Paneling and Wood Flat Stock. December 20, 1995.

7. California South Coast Air Quality Management District Rule 1104: Solvent Cleaning Operations. September 24, 1999.

8. B. Jordan, EPA: ESD. Information Collection Request for the Wood Building Products Industry. Research Triangle Park, NC. June 11, 1998.

Chapter 2
Wood Building Products – Surface Coating Source Category

This chapter characterizes the wood building product surface coating industry, including facilities, products, manufacturing and surface coating processes, sources of hazardous air pollutant (HAP) emissions, and emission reduction techniques. The information in this chapter comes from readily available sources including the literature, industry representatives, and state and local air pollution control agencies. Detailed descriptions of the wood building product surface coating industry can also be found in the Preliminary Industry Characterization (PIC) document.[1]

2.0 INDUSTRY PROFILE

A wood building product is defined as "any finished or laminated wood product that contains more than 50 percent (by weight) wood or wood fibers and is used in the construction, either interior or exterior, of a residential, commercial, or institutional building." The wood product can be finished with paints, stains, sealers, topcoats, basecoats, primers, enamels, inks, adhesives, adhesive-bonded laminates, or temporary protective coatings. This description excludes products with layers bonded to the substrate as part of the substrate manufacturing process, as well as surface coating operations involving the manufacture of wood furniture or furniture components. These categories are covered under other regulations.

The specific products covered by this source category include, but are not limited to, flooring, shingles, awnings, doors, shutters, mouldings, hardwood/softwood plywood panels, arches, trusses, hardboard, particleboard, reconstituted wood panels, wall tile, and wallboard.

Numerous Standard Industrial Classification (SIC) codes are used to describe the wood building products industry. Table 2-1 lists these codes, their descriptions, and the total number of facilities included in each, based on the 1992 Census of Manufacturers. Each SIC code includes facilities that manufacture the substrate (e.g., particleboard or plywood) and may or may not have surface coating operations because the census does not classify facilities that surface coat separately. The listed SIC codes also include manufacturers of other products that are not considered wood building products. While surface coating will only be a part of these total emissions, the SIC codes and census data served as starting points for conducting analyses of potentially affected sources.

The EPA sent ICRs to wood building product companies, requesting data for the 1997 manufacturing year, in an effort to receive detailed coating and emission data for the industry characterization. The facilities that responded, representing only a cross section of the wood building products surface coating industry, are broken down according to SIC codes in Table 2-2. All summary data in this chapter are based on the facilities being major or synthetic minor sources of HAP emissions. According to the Clean Air Act, a major source is "any stationary source or group of stationary sources located within a contiguous area and under common control that emits or has the potential to emit, in the aggregate, 10 tons per year or more of any hazardous air pollutant or 25 tons per year or more of any combination of hazardous air pollutants." A synthetic minor source is defined as "any source that has the potential to emit HAP but is not a major source according to Title V classification." In order to avoid being classified a major source, a synthetic minor facility must adopt some type of enforceable limitation on its potential HAP emissions to stay below the 10 tons per year of any individual HAP and the 25 tons per year of any combination of HAPs cutoffs.

Table 2-1. SIC Codes Representing the Wood Building Products Industry[a,b]

SIC Code	Description	Representative products	Total facilities
2426	Hardwood dimension and flooring mills	Hardwood and parquet flooring	831
2429	Special product sawmills, NEC	Wood shingles	192
2431	Millwork	Awnings, doors, garage doors, mantels, shutters, mouldings	3,155
2435	Hardwood veneer and plywood	Hardwood plywood panels, prefinished hardwood plywood	318
2436	Softwood veneer and plywood	Softwood plywood panels	201
2439	Structural wood members, NEC	Arches, trusses	895
2451	Mobile homes	Mobile buildings, classrooms, homes	286
2452	Prefabricated wood buildings and components	Prefabricated floors, panels for prefabricated buildings	655
2493	Reconstituted wood products	Hardboard, particleboard, reconstituted wood panels, wall tile, wallboard	288

[a] Based on 1992 Census of Manufacturers.
[b] Some SIC codes include facilities that do not perform surface coating operations and facilities that do not manufacture wood building products or are not major sources of HAP.

Table 2-2. SIC Codes Representing Respondents to the Wood Building Products Surface Coating Industry Survey[a]

SIC Code	Description	Representative products	Total facilities
2426	Hardwood dimension and flooring mills	Hardwood and parquet flooring	5
2429	Special Product Sawmills, NEC	Shutters	0
2431	Millwork	Awnings, doors, garage doors, mantels, shutters, mouldings	17
2435	Hardwood veneer and plywood	Hardwood plywood panels, prefinished hardwood plywood	7
2436	Softwood veneer and plywood	Softwood plywood panels	0
2439	Structural wood members, NEC	Arches, trusses	1
2451	Mobile homes	Mobile buildings, classrooms, homes	14
2452	Prefabricated wood buildings and components	Prefabricated floors, panels for prefabricated buildings	0
2493	Reconstituted wood products	Hardboard, particleboard, reconstituted wood panels, wall tile, wallboard	24
2499	Wood Products, NEC		3
Unknown			2

[a] According to industry information, including only major and synthetic minor sources. Some facilities have multiple SIC code classifications. They are counted in both categories.

2.1 WOOD BUILDING PRODUCT SURFACE COATING PROCESSES

During the surface coating process, products such as paints and basecoats are applied to the wood building product. Because many coating products contain volatile components, the process is a significant source of emissions. Coating lines operate between 100 and 400 feet per minute (ft/min) depending on the coating method. Typical coating application methods include spraying, roll coating, rotogravure cylinder, curtain coating, flow coating, brush coating, pneumatic (air knife) coating, vacuum coating, and dip coating. Each of these methods is discussed below.

In spray coating, a hand-held or automatic spray gun is used to apply the coating. The guns are typically used in a spray booth. Air is constantly pulled into and vented from the booth to keep levels of volatile compounds low. Spray technologies, such as conventional air, airless, air-assisted airless, electrostatic, and high-volume low-pressure (HVLP) spraying, are often used to coat non-flat pieces. These spray technologies differ in the way the coating is forced out of the spray gun.

Conventional air spray uses compressed air to atomize the finishing materials. Airless spraying atomizes the finish by forcing it through a small opening at high pressure. Air-assisted airless spray uses an airless spray unit with a compressed air jet. This combination finalizes breakup of the finish and helps to shape the spray pattern on the product. Electrostatic finishing is performed by spraying negatively charged finish particles onto grounded wood products. High-volume low-pressure spraying uses a high volume of air delivered at an effectively low pressure to atomize a finish into a pattern of low-speed particles, typically resulting in less overspray.

Roll coating is a process in which cylindrical rollers apply a limited amount of coating to the substrate. There are four types of roll coaters: direct roll coaters (rolls in same direction as product), reverse roll coaters (rolls in opposite direction of product), differential roll coaters (has two cylinders that move at different speeds), and sock coaters (has a fabric sock over the roll to produce a textured finish). Generally, a roll coater contains a rubber-covered coating roll and a smooth, chrome-plated doctor roll creating a reservoir that holds the coating material. The material is held in this reservoir by adjustable end seals at the ends of the rolls. The doctor roll

meters the coating material onto the surface of the coating roll. A feed roll or conveyor belt holds the stock in contact with the coating roll and helps drive it through the machine. A simplified schematic of both a direct roll coater and a reverse roll coater is presented in Figure 2-1.

A rotogravure cylinder is similar to the direct roll coater, only the cylinder is etched and coated with ink to apply a pattern such as a simulated wood grain onto the substrate. Roll coating is suitable for the application of coatings when a low-build finish is sufficient.

A curtain coating applicator uses a metered slit (shown in Figure 2-1) or weir to create a free-falling film of coating that the substrate passes through. Coating pump speed, weir or metered-slit coating reservoir head, and conveyer belt speed all control the amount of coating applied. Excess coating is collected in a reservoir and returned to the coating head. Curtain coating is typically used when a relatively thick coat is required. The rate of panel movement and the controlled uniform flow of the film of coating determines the coating thickness.

Flow coaters use nozzles and low pressure to create a wet film of coating that the substrate passes through. Excess coating is collected in a reservoir and returned to the nozzle heads. A simplified schematic of a flow coater is presented in Figure 2-2. Brush coaters flood a panel with coating similarly to flow coaters and then use brushes to remove the excess. The excess is collected in a reservoir and recycled back to the coater.

Pneumatic (air knife) coaters flood a panel with coating similarly to flow coaters and then remove the excess by exposing the panel to pressurized air. The excess is collected in a reservoir and recycled back to the coater. A simplified schematic of a pneumatic coater is presented in Figure 2-2.

A vacuum coater pulls paint up from a reservoir, creating a wall of paint. The substrate passes through paint and receives a coating. Excess paint is vacuumed off the substrate. Paint thickness is controlled by vacuum and the conveyor speed. Vacuum coaters can be used in coating

applications that require all sides of a substrate to be coated at one time. A simplified schematic of a vacuum coater is presented in Figure 2-2.

The simplest coating process is dip coating, a process in which the piece is dipped into a vat of coating, and the excess is allowed to run off. Dip coaters can be used on multi-dimensional pieces and/or non-typical part configurations.

The industry currently uses primarily waterborne and ultraviolet-cured (UV-cured) coatings, although some products (i.e., tileboard, fire-resistant paneling) still require solventborne coatings to provide adequate water, weather, and fire resistance. Quick drying time is another reason why manufacturers use solventborne coatings, especially when fast line speeds are used. The applied coating needs to be dry, hard, and cool prior to packaging, otherwise the products have the potential to stick together when stacked, causing defects or reject material. This problem is sometimes referred to as "blocking."

Specific coating requirements depend on the product that is being coated, since certain product uses dictate durability and strength of the coating. The following sections describe these requirements.

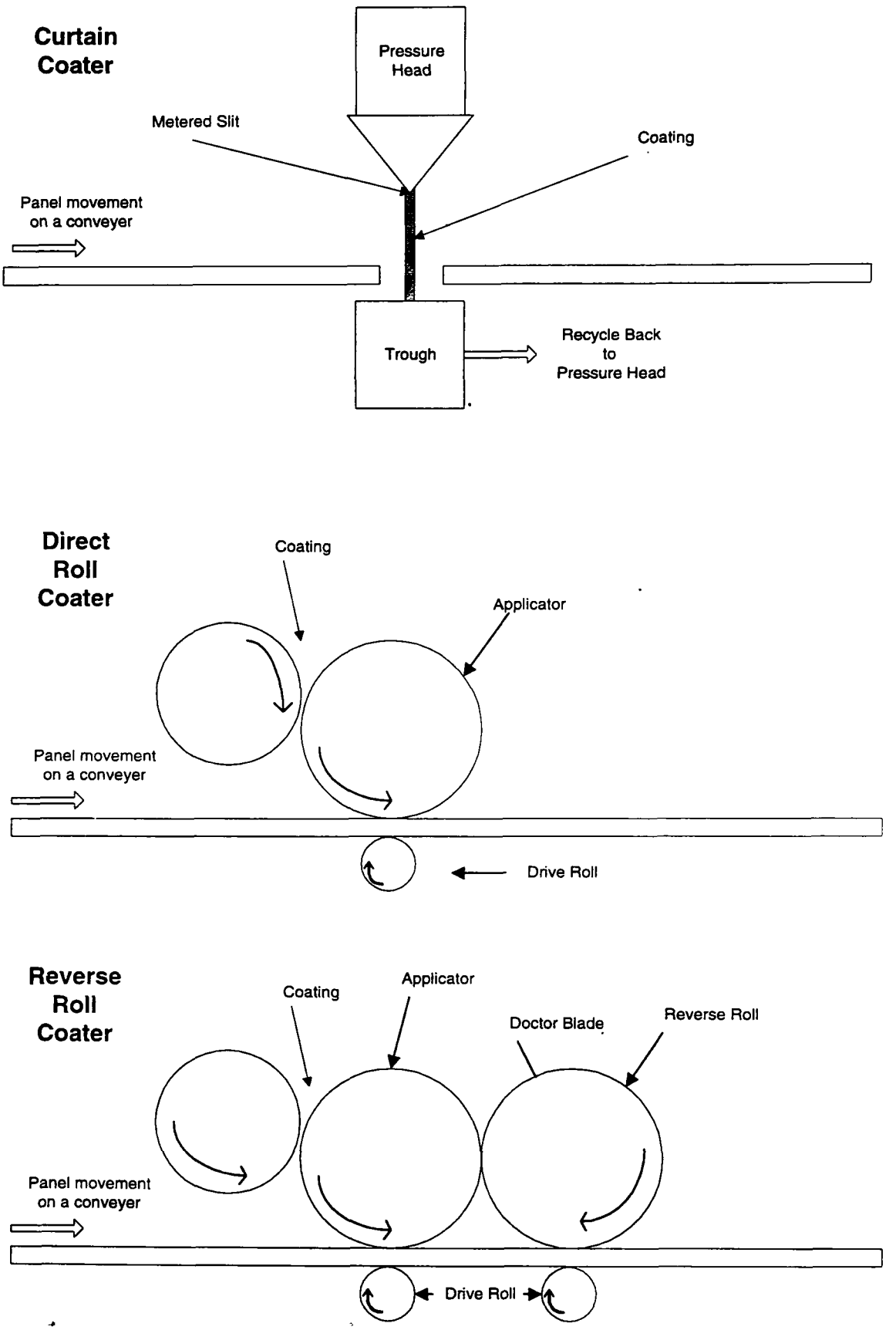

Figure 2-1. Simplified Curtain and Roll Coater Diagrams.

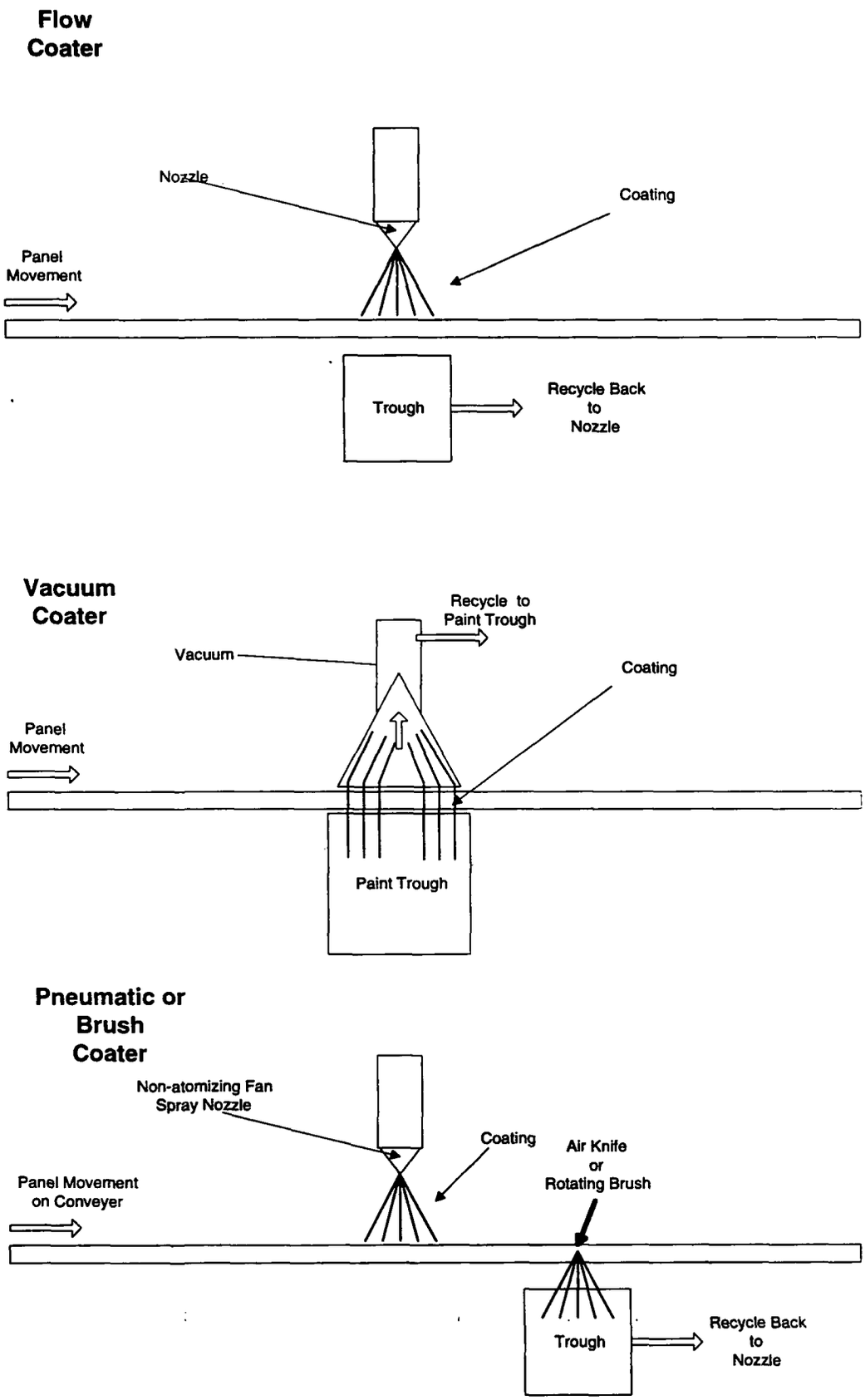

Figure 2-2. Simplified Flow, Vacuum, and Pneumatic Coater Diagrams.

2.1.1 Interior Paneling

The original control technique guideline (CTG), developed by the EPA in 1978, only covered surface coating of interior paneling. Since the CTG was published, the use of interior paneling has decreased dramatically. One wood industry coating supplier estimates that the production of traditional interior paneling has decreased 75 percent over the last two decades due to the increased popularity of wallpaper and use of dry wall. Most interior paneling manufactured today is manufactured outside of the United States (U. S.). However, there is still production in the U. S. that will be covered by this regulation. There are three primary types of interior paneling: paper laminated, printed, and natural finish. The finishing processes for each type are discussed below.

2.1.1.1 Paper Laminated Paneling

These panels are laminated with a decorative paper. Polyvinyl acetate (PVA) is the primary adhesive used for laminating, but urea-formaldehyde resins and contact adhesives are also used for limited applications. Grooves are often cut in the panel after lamination and then usually sprayed with water-based pigmented coating. The overspray is then ordinarily cleaned up with low solids water-based clear coating which is applied by rollcoaters. A protective waterborne topcoat is typically applied with a roll coater over some paper laminated panels.

2.1.1.2 Printed Interior Paneling

A typical coating process for printed interior panels includes filler, basecoat, ink, and topcoat. Groove coats are also used for finishing the grooves cut in the paneling. The filler is typically a waterborne or UV coating that is applied using reverse roll coating. After the filler is applied, typically a waterborne basecoat is applied, typically with a direct roll coater. The inks are applied with a rubber offset gravure printer. Several ink colors may be applied to reproduce the appearance of wood or other substrates such as marble or textured cloth. One or two coats of a clear protective topcoat are then applied with a direct roll coater. Both waterborne and UV-cured topcoats are used.

2.1.1.3 Natural Finish Interior Paneling

Stains, toners, sealers, and topcoats may all be used to produce the final finish. A pigmented groove coat is also applied to the panel grooves. Stains, applied with a direct roll coater, give the wood a uniform color. A toner may then be applied with a direct roll coater to seal the stain. Filler is then applied using a reverse roll coater, in preparation for the sealer, used to protect the wood from moisture and provide a smooth base for the topcoat. Finally, one or more layers of topcoat are applied with a direct roll coater or a curtain coater. The topcoat may be waterborne or UV-cured, although the other finishes are typically waterborne.

Figure 2-3 shows a generic coating process diagram for prefinished interior lauan paneling. First, a sander smooths and cleans the substrate to ensure a suitable surface for coating adhesion. A reverse roll coater applies filler to the paneling and grooves are cut into the panels. Spray guns apply a groove coat to protect the surface of the grooves. Then the panels are sanded again before a direct roll coater applies one or two layers of basecoat. Before being printed with an artificial wood grain by a rotogravure cylinder, the basecoat must be cured in an oven. The panels then receive a topcoat from a direct roll coater. Finally, the panels are oven-dried, cooled, and packaged for storage and shipment.

Due to the reasons outlined in Chapter 1, the flatwood paneling source category is being proposed to be expanded to include categories of wood building products that were not covered by the original CTG. The following paragraphs describe these products and their associated coating processes.

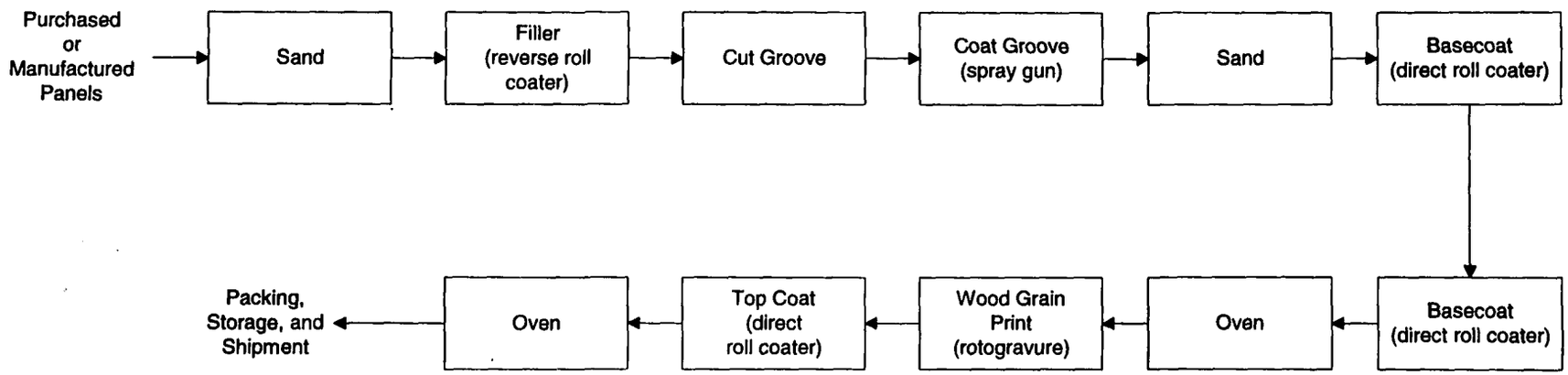

Figure 2-3. Generic Coating Line Schematic for Prefinished Interior Lauan Plywood Paneling.

2.1.2 Exterior Siding

Exterior siding may be made of a solid wood such as cedar, of hardboard or waferboard, or of a relatively new product known as cementitious board. Siding made of solid wood is typically finished in the field, although some finishing is done in the factory on a limited basis. Hardboard siding is typically primed in the factory, usually with waterborne coatings; a final coating is applied in the field using consumer architectural paint. Waferboard siding utilizes a coated paper overlay with a waterborne primer.

Cementitious board, which consists of approximately 10 to 30 percent wood fiber and 70 to 90 percent cement, has been used extensively in Europe and is growing in popularity in the U. S. Several companies are in the process of opening, or have recently opened, new facilities to produce cementitious board for use in the U. S. Some industry representatives and end users state that cementitious board has several advantages over hardboard in that it is more resistant to moisture, termites, and fire than hardboard. As with hardboard siding, cementitious board is typically primed in the factory with the final coating applied in the field. However, some board is sold unfinished or prefinished. Both the primers and topcoats are typically either waterborne or UV cured.

2.1.3 Doors and Doorskins

Door and doorskin manufacturing are substantially differentiated processes in practice. Doorskins are thin pieces of wood, such as veneer or fiberboard, used on the outside surfaces or facings of a door. Doors are made by applying adhesive to a core and frame, and then pressing a doorskin on either side of the core and frame. Door assembly or door manufacturing operations are not usually done at the doorskin manufacturing location. However, the door factory may finish the doorskins and/or the doors and frames. These finishes are generally water-based, but smaller operations may use solvent-based finishes.

Doorskins are produced on high-speed finishing lines using low-volatile organic compound (VOC) and HAP coatings. The predominant market for door skins are the door manufacturers

themselves, who use them in their own manufacturing processes. The following paragraphs are generic descriptions and typical coating applications for different door products.

2.1.3.1 Solid Wood Doors

Solid wood doors are typically constructed from multi-layers of veneer or flat pieces of wood over a wooden core. These doors are usually finished by a spray application of stain, sealer, and topcoat using solvent, waterborne, or UV coatings.

2.1.3.2 Hollow Core Doors

Hollow core doors are constructed of flat pieces of veneer or plywood built into a hollow wood frame. They can be plywood veneer doors, flat composite doors, or molded doors. The typical surface coating processes for plywood veneer doors include solventborne, waterborne or UV-cure stains, sealers, and topcoats applied via spray or direct roll coat methods. Flat composite doors are coated with solventborne or waterborne sealers, fillers, basecoats, inks, and topcoats. The ink is printed while other applications are typically applied via spray or direct roll coat. Molded doors are usually primed and prefinished using waterborne or UV-curable coatings. Figure 2-4 displays generic coating process diagrams for molded and smooth-face doors. A sander smooths and cleans the substrate to ensure a suitable surface for coating adhesion. A reverse roll coater applies filler to the doors. The doors are sanded again before a direct roll coater applies a stain. After ovens dry the stain, the doors receive a topcoat from a direct roll coater. Finally, the topcoat is cured, and the doors are cooled and packaged for storage and shipment.

Molded Door Spraybooth Line

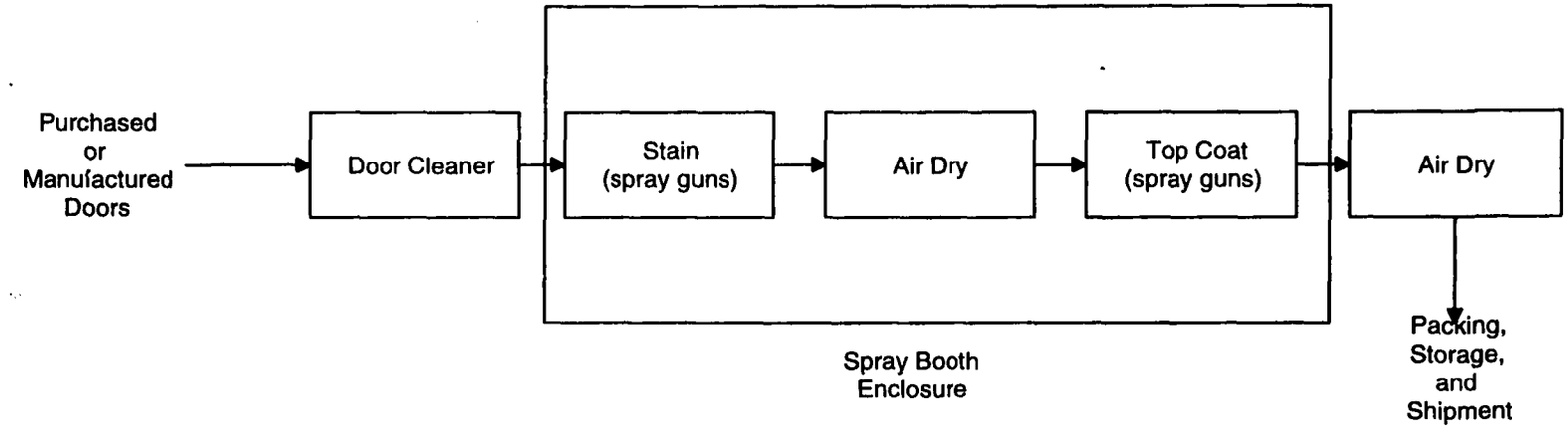

Flat Composite or Plywood Veneer Door Skin Line

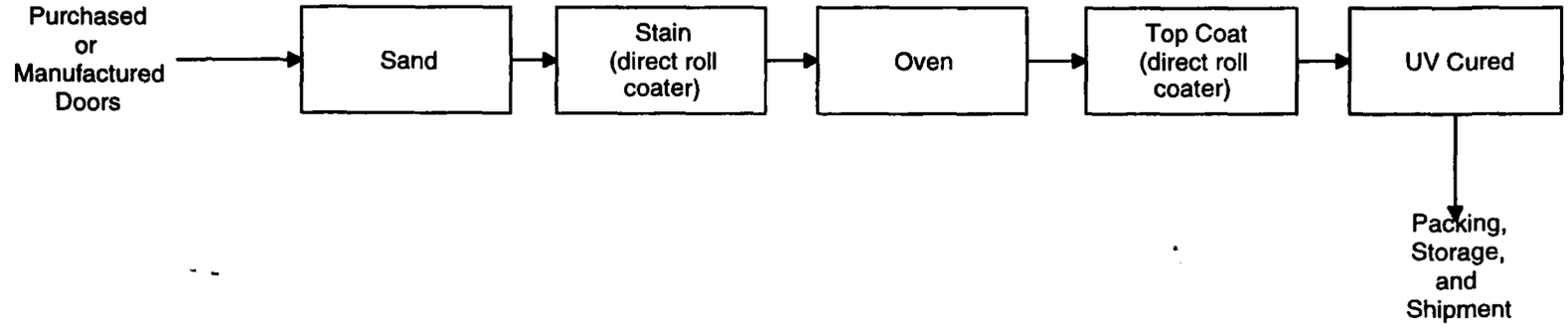

Figure 2-4. Generic Coating Line Schematic for Prefinished Molded Doors and Doorskins.

2.1.4 Tileboard

Tileboard is a type of Class I hardboard that resembles tile and is used as a splashboard around sinks, tubs, and showers. While most hardboard is finished with waterborne primers and topcoats, tileboard is finished with solventborne coatings because waterborne coatings do not provide the required moisture resistance. Emissions from the solventborne coatings are controlled with thermal oxidizers at some facilities. Otherwise, the solvent emissions are uncontrolled and vented directly to the atmosphere.

2.1.5 Flooring

Hardwood flooring is cut and grooved, and then is typically finished in 8- by 12-foot strips. The industry uses both waterborne and solventborne stains and primarily UV-cured topcoats which are typically applied with a roll coater. Laminate flooring is becoming increasingly popular in the U. S. and is produced by using adhesives (typically urea formaldehyde or melamine formaldehyde) to apply a paper backing to one side of a thin piece of particleboard and a decorative laminate to the other side. The adhesive is usually applied with a roll coater while the decorative laminate and backing paper may be applied to the particleboard using pressure and high temperatures.

2.1.6 Window Frames and Joinery

Window frames and joinery are typically finished with either flow coaters or spray guns. Both waterborne and solventborne coatings are used. Solventborne coatings are required for some products, particularly those with a long warranty, because they are more durable and provide better protection than the waterborne coatings. Some products are also dipped in a water repellant/preservative treatment (usually consisting of wax, mineral spirits, etc.) before finishing.

2.1.7 Shutters

Shutters are usually roll-, spray-, or dip-coated with a protective and/or decorative coating. Waterborne coatings are typically used for finishing. While this product will be covered by the wood building product (surface coating) NESHAP, none of the surveyed facilities reported any coating activities involving these types of products, so industry information is not available to clarify its coating processes. It is expected that the coating systems are comparable to those used on other exterior products such as siding, doors, and windows.

2.1.8 Moulding and Trim

While exterior use of these products is growing, these decorative or ornamental wood products are usually used around interior doors and windows. The products are typically spray-coated or flow-coated with waterborne or solventborne coatings. Additionally, factories which are finishing wood moulding and trim products may also be finishing a considerable amount of plastic mouldings and trim. The surface finishes for plastic usually require coatings which are more technically difficult to use and apply than coatings used for wood substrates.

Figure 2-5 represents a generic coating process for high-end woodgrain millwork. The substrate is cut to the size and milled to the shape of the final product. A sander smooths and cleans the substrate to ensure a suitable surface for coating adhesion. A flow coater applies a basecoat, which is then dried in an oven. If needed, a second basecoat is applied. A wood grain ink is applied by a rotogravure cylinder. Then the millwork receives a topcoat from a curtain coater. Finally, the millwork is oven-dried, cooled, and packaged for storage.

Other products and finishing lines can incorporate any number of combinations of coaters, sanders, ovens, etc. The combination typically depends upon the use of the final product.

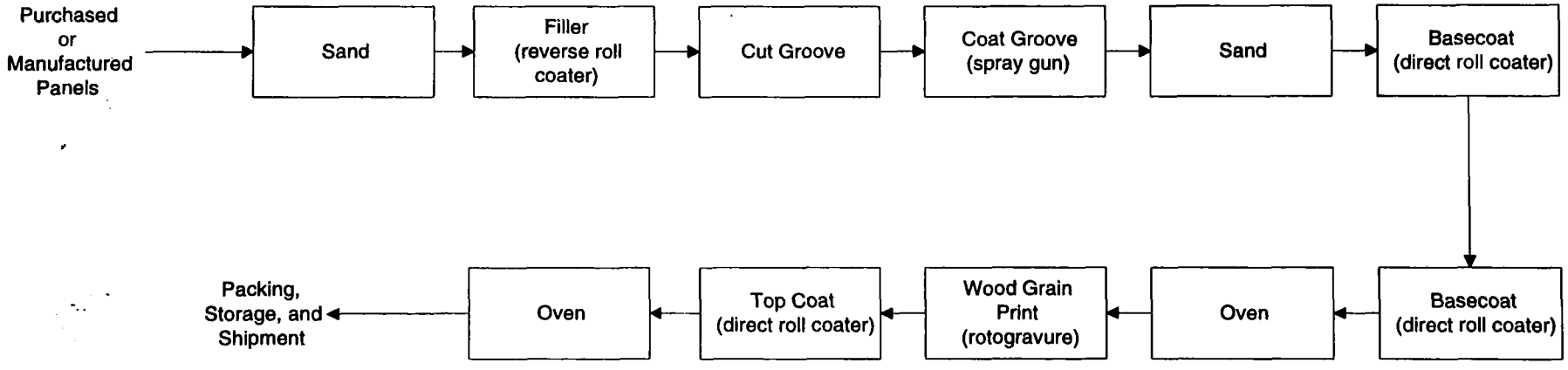

Figure 2-5. Generic Coating Line Schematic for Prefinished Woodgrain Molding.

2.2 COATINGS

Types of coatings used in the wood building products industry include, but are not limited to, fillers, sealers, groove coats, primers, stains, basecoats, inks, and topcoats. Fillers are used to fill pores, voids, and cracks in the wood and to provide a smooth surface. Sealers seal off substances in the wood that may affect subsequent finishes and also protect the wood from moisture. Groove coats cover grooves cut into panels and assure the grooves are compatible with the final surface color. Primers are used to protect the wood from moisture and provide a good surface for further coating applications. Stains are non-protective coatings that color the wood surface without obscuring the grain. Basecoats provide color and hide substrate characteristics. Inks are used to print decorative designs on printed panels or produce a simulated wood grain. Pigmented and clear topcoats provide protection, durability, and gloss.

2.2.1 Coating Technologies

The most prevalent form of emission control for the wood building products (surface coating) source category is the use of low- or no-HAP coatings.

2.2.1.1 Solventborne Coatings

Solventborne coatings are typically used in applications where water, fire, abrasion or weather resistance is an issue. In addition, solventborne coatings typically have quick drying times. This allows facilities to operate coating lines much faster and dedicate less floor space to curing/drying, and prevents incomplete drying of products that could subsequently stick together in shipment. However, because most manufacturers are subject to VOC and air toxics regulations limiting air emissions, low-VOC and low- or no-HAP coatings are being developed as replacements for conventional solventborne coatings in many applications.

2.2.1.2 High-Solids Coatings

High-solids coatings are solventborne coatings that have reduced organic solvent content and are typically applied by either spray or roller methods. High-solids coatings can be used to reduce HAP/VOC emissions. Based on equivalent solids applied, the higher solids coating results in

lower emissions than a traditional finish. One disadvantage of changing from solventborne coatings to high-solids coatings is the issue of viscosity. Since high-solids coatings have higher viscosities than conventional coatings, different application equipment may be required, such as heating units, to reduce viscosity.

2.2.1.3 Waterborne Coatings

Waterborne coatings are coatings in which water is the main solvent or dispersing agent in a polymer or resin base. Organic solvents are also added to the coating to aid in wetting, viscosity control, and pigment dispersion. Each type of waterborne coating exhibits different film properties depending on the type of polymers in the formulation. The organic polymers found in waterborne coatings include alkyds, polyesters, vinyl acetates, acrylics, and epoxies, which can be dissolved, dispersed, or emulsified. While these coatings are not typically free of VOC, their use can reduce VOC emissions by as much as 70 percent. However, disadvantages can include grain raising, increased drying time, and low gloss. Some facilities may be able to use waterborne coatings for some finishing steps, but because of certain customer or performance requirements, not all coating steps can be easily switched.

Another disadvantage for waterborne coatings is the cost of new equipment since the use of such coatings requires the facility to convert to stainless steel lines and equipment. Waterborne coatings can use the same types of application equipment as conventional solventborne coatings; however, equipment used to apply waterborne coatings must be dedicated to waterborne coatings. This is because solventborne coating residues are incompatible with waterborne coatings and must be completely removed from the equipment before water-based coatings can be used, which is a laborious and uneconomical process. Moreover, additional costs may be incurred because some equipment that is susceptible to corrosion, including tanks, piping, and process equipment, may require replacement.

2.2.1.4 *Ultraviolet Radiation-Cured (UV-Cured) Coatings*

Radiation curing is a technology that utilizes electromagnetic radiation energy to affect chemical and physical change of organic finish materials by the formation of cross-linked polymer networks. One type of radiation used is UV light. The primary components of UV-cured coatings are multi-functional polymers, mono-functional diluent monomers, and the photo-initiators. A photo-initiator absorbs the UV light and initiates the curing process. The diluent serves as a viscosity modifier for the finish and is similar to a traditional solvent in this regard, but most of the diluents in UV finishes polymerize and becomes part of the coating film. Only the diluent in the coating that does not reach the piece is emitted. The curing process is very fast (as little as one or two seconds), and provides a final film that is stain-, scratch-, and mar-resistant. The UV-curable finishes are often considered to contain up to 100 percent solids because 100 percent of the components react to form the coating. Due to the generally high solids content of these types of coatings, high film thicknesses can be achieved with fewer coats or process steps than with lower solids conventional coatings. Because curing requires "line of sight" radiation, these types of coatings are ideal as flat panel or component part finishes.

Ultraviolet radiation-cured coatings have three components: oligomers, monomers, and photochemical initiators. The oligomers provide most of the desired coating properties, such as flexibility, hardness, and chemical resistance. The monomers decrease the viscosity of the polymers and improve other features such as gloss, hardness, and curing speed. The photochemical initiators are unstable chemicals that form protons or free radicals when bombarded by UV radiation to initiate the cross-linking process. Ultraviolet-cured coatings are cured by medium-pressure mercury vapor lamps.

Two categories of UV coatings are currently in use: (1) acrylate epoxies, urethanes, and polyesters known as "free radical" types, and (2) cationic epoxies. As the names imply, free radical UV coatings contain photochemical initiators that release free radicals when bombarded by UV light, whereas the photochemical initiators in cationic epoxies produce protons. Free radical UV coating technology is older and is the most commonly used type of UV coating. However,

cationic epoxies are being developed with superior properties and are expected to eventually replace free radical-type UV coatings.

The UV coatings have the advantages of rapid curing, low process temperatures, low-VOC and HAP content, and lower energy costs due to the elimination of drying ovens. Additionally, UV application and curing equipment occupy less plant space than conventional coating and drying equipment. However, UV coatings are more expensive than conventional coatings. Also, UV coatings require specialized equipment; consequently, retrofitting an existing coating line involves a significant capital investment.

2.2.1.5 Electron-Beam (EB) Curable Coatings

Electron-beam curable coatings generally consist of non-solvent-containing liquids applied to a substrate and converted into a solid film within a fraction of a second upon exposure to a beam of electrons. Curing may be defined as the conversion of liquid to solid. Electron-beam coatings are usually applied to flat surfaces such as flooring, door skins, and some interior panels.

Typical application techniques for EB-cured coatings are spray, roll coat, and curtain coat. Electron-beam-cured coatings can be clear or pigmented. Although the initial capital investment for equipment may be substantial, users may increase productivity and efficiency. Coating cost comparisons with other technologies should be made on a solid pound basis (i.e., the cost of a solventborne or waterborne coating should be divided by the non-volatile percentage)[2].

2.3 CHARACTERIZATION OF HAP EMISSIONS

2.3.1 HAP Emissions

Based on the 1994 and 1995 emissions data from EPA's Toxic Release Inventory (TRI) System database, methanol, formaldehyde, xylene, toluene, and methyl ethyl ketone (MEK) are the primary HAP emitted by this source category. Some inorganic HAP are also emitted from this industry, but the total inorganic HAP emissions are less than 1 percent of the total HAP emissions and are, therefore, not being regulated by the NESHAP. Table 2-3 presents the primary organic

HAP emitted by facilities included in the SIC codes of interest as reported in the 1994 TRI database. Table 2-4 lists total HAP emissions by SIC code.

Several of the organic HAP listed in Table 2-3 are not emitted from the finishing of wood building products or associated emission sources (e.g., cleaning and gluing). Many, such as acetaldehyde, hydrochloric acid, and chlorine, are likely emitted from the substrate manufacturing process or other processes at the facility.

Some of the organic HAP listed, such as methanol, formaldehyde, and phenol, are emitted from both the finishing process and the substrate manufacturing process, so the total emissions reported are likely higher than actual emissions from the surface coating process. Unfortunately, the TRI data base does not provide sufficient information to apportion the emissions to a particular process.

Using the estimates received from ICR responses for the 1997 reporting year, overall organic HAP emissions were broken down according to specific organic HAP. These totals are listed in Table 2-5 and are based only on those facilities in the project database designated as major or synthetic minor sources, according to their Title V status.

A comparison between Table 2-3 and Table 2-5 shows the influence of substrate manufacturing on the TRI data. According to industry information as reported in ICR responses, the most common organic HAP from surface coating operations is xylene. However, according to TRI data, the most common organic HAP emitted from all wood building industries is methanol. While Table 2-5 shows some methanol being emitted from surface coating operations, the majority of the methanol emissions are from substrate manufacture.

Table 2-3. Primary Organic HAP Emitted by the Wood Building Products Industry[a]

Pollutant	Tons emitted	% of total
Methanol	7,069	49.40
Formaldehyde	1,881	13.14
Toluene	1,261	8.81
Xylene (Mixed Isomers)	906	6.33
Acetaldehyde	853	5.96
Methyl Ethyl Ketone	635	4.44
Hydrochloric Acid	424	2.96
Phenol	301	2.10
Chloroform	227	1.59
Methyl Isobutyl Ketone	163	1.14
Certain Glycol Ethers	122	0.85
Dichloromethane	106	0.74
Ethylbenzene	98	0.68
n-Hexane	56	0.39
Styrene	52	0.36
Ethylene Glycol	39	0.27
Cresol (Mixed Isomers)	38	0.27
Chlorine	22	0.15
Methyl Methacrylate	13	0.09
Chloromethane	13	0.09
1,1,1-Trichloroethane	10	0.07
Dibutyl Phthalate	9	0.06
1,2,4-Trichlorobenzene	8	0.06
Diisocyanates	5	0.03
Total	14,311	100

[a] Based on 1994 Toxic Release Inventory (TRI) Systems data.

Table 2-4. Organic HAP Emissions by SIC Code[a]

SIC code and title	Total annual HAP emissions (tons/yr)	
	TRI 1994	TRI 1995
2426 - Hardwood Dimension and Flooring Mills	388	223
2429 - Special Product Sawmills, NEC	1,520	3,150
2431 - Millwork	2,267	1,664
2435 - Hardwood Veneer and Plywood	467	955
2436 - Softwood Veneer and Plywood	3,120	3,679
2439 - Structural Wood Members, NEC	170	148
2451 - Mobile Homes	128	130
2452 - Prefabricated Wood Buildings and Components	50	32
2493 - Reconstituted Wood Products	5,905	8,704
Total	16,009	20,680

[a] Based on EPA's Toxic Release Inventory (TRI) System database.

Table 2-5. Primary Organic HAP Emitted by Surface Coating of Wood Building Products[a]

Pollutant	Tons emitted	% of Total
Xylenes (isomers and mixture)	774	52.09
Toluene	144	9.69
Ethyl Benzene	131	8.82
EGBE	130	8.75
Methyl Ethyl Ketone	58	3.90
Methyl Isobutyl Ketone	58	3.90
Methanol	49	3.30
Styrene	38	2.56
2-Propoxyethanol	28	1.88
Formaldehyde	26	1.75
Methoxyethoxyethanol	19	1.28
Glycol Ethers	10	0.67
All Other HAPs	21	1.41
Total	1,486	100

[a] Based on 1997 Industry data.

2.3.2 Organic HAP Emission Sources and Emission Reduction Techniques

The primary sources of organic HAP emissions associated with wood building products surface coating operations are the application of coatings, the use of solvents in cleaning and thinning operations, and the subsequent curing/drying of the coatings. These sources were discussed previously in this chapter and contribute 1,500 tons of organic HAP emissions from the surveyed facilities in the project database. There are also four secondary emission sources that emit less than 50 total tons of organic HAP emissions. These other sources of emissions are listed and discussed in the following sections.

2.3.2.1 Surface Preparation

These are the areas related to the preparation of the surface of a part or product prior to the application of a surface coating. This is defined as the removal of contaminants from the surface of a substrate, or the activation or reactivation of the surface in preparation for the application of a coating. These operations include sanding/buffing operations and trimming/cutting operations. Only a small percentage of facilities have any type of system to collect or remove the associated dust from the air. This is not relevant to the determination of a maximum achievable control technology (MACT) floor since there are no organic HAP used or emitted, but the associated dust and wood splintering could be a concern for Occupational Safety and Health Administration (OSHA) regulations.

Another operation that takes place in some surface preparation areas is pre-heating the wood pieces in ovens before coating. This practice could allow for use of thicker or higher-solids coatings since coatings flow more easily onto heated wood surfaces. Again, no organic HAP materials are used or emitted, but this knowledge could prove useful to reduce the excess use of thinning solvents.

2.3.2.2 Storage Areas

Storage areas for coatings and/or coating components such as inks, adhesives, caulks, and solvents are a potential source of organic HAP emissions. According to the ICR information for

73 facilities with storage areas, the total organic HAP emitted was less than 6 tons. To minimize emissions from open containers and to reduce the added cost of replacing evaporated materials, good housekeeping measures can be used. Control devices are not typically required by States for VOC emissions, but some surveyed facilities currently capture emissions from the storage area, either from the area/room of emission or directly from the storage tank.

2.3.2.3 Waste and Wastewater Operations

At wood building products facilities that perform surface coating, waste products include waste coatings, waste solvents, wastewater, sludge, and miscellaneous items such as cleaning rags and dust from dust collectors. According to ICR information from 61 facilities with waste and wastewater related HAPs, the HAP emissions totaled 16 tons per year. A majority of the respondents use closed pipes, tanks, or drums for the transport of waste and wastewater. One-quarter of the respondents treat the waste on-site, but it is unknown how the remaining wastes are treated or disposed. Since the final disposal is not known, air emissions should be minimized as much as possible by good housekeeping practices, such as covered waste containers.

2.3.2.4 Mixing Operations

Mixing of paints used in surface coating operations is another potential source of organic HAP emissions. Mixing operations include all forms of coatings: mixing (combining two or more "as-supplied" coatings to produce an "as-applied" coating), or formulation (creating a coating using the most basic components, usually used in specialty applications). According to the ICR information received from 32 facilities with mixing-related operations, mixing is a relatively small operation, contributing only 32 tons of organic HAP emissions. Good housekeeping measures and work practices, such as covered mixers and covered mix/blend tanks, and immediate use of the mixed coating could reduce excess organic HAP emissions.

2.4 SUBCATEGORIZATION

As mentioned above, the majority of organic HAP emissions from surface coating operations at wood building product facilities originate from the application of coatings, the use of solvents in cleaning and thinning operations, and the subsequent curing/drying of the coatings. Consequently, the magnitude of emissions depends heavily on the amount and HAP content of the coatings and solvents used, the application method used, the drying/curing operations used, and the efficiency of any add-on control devices installed after application and drying/curing equipment. These factors are determined by the purpose or function of the coating, the surface coating method, and specific requirements related to the end use of the wood building product.

This section presents the subcategorization scheme for the wood building products surface coating NESHAP. The subcategories were chosen by taking into account end-use product performance characteristics, coating usage and performance requirements, organic HAP emission characteristics, application equipment, and control device applicability. Furthermore, the decision to subcategorize incorporates knowledge gained during site visits to observe wood building product surface coating operations and/or provided during industry stakeholder meetings. In addition, the subcategories presented herein reflect most common practices within the industry of co-locating wood building product surface coating operations within a contiguous facility. Based on this information, the following subcategories for the wood building product surface coating industry were determined:

- Doors and Windows;
- Flooring;
- Interior Wall Paneling and Tileboard;
- Other Interior Panels; and
- Exterior Siding, Doorskins, and Miscellaneous.

The rationales for selecting the five subcategories are given below and will be discussed further in Chapter 5 (Model Plants and Control Options), where the model plants are described for each subcategory. Also, the subcategories will be used to determine the impacts discussed in Chapter 6

(Summary of Environmental and Energy Impacts) and the associated costs presented in Chapter 7 (Model Plant Control Costs).

2.4.1 Subcategory Descriptions

2.4.1.1 Doors and Windows

The doors and windows subcategory typically includes the priming and sometimes prefinishing of doors and/or windows including associated door and window components, such as mouldings or trim. Moulding and trim are decorative or ornamental wood products that are assembled with doors and windows to create a fixture. Facilities typically produce both doors and windows, and door and window components at the same site. This is primarily to achieve consistency in the appearance of the coatings applied and to aid in the assembly of the end product or complete fixture (e.g., door or window assembly).

Door and window manufacturing and assembly operations are not typically performed at the same site as doorskin manufacturing due to the different manufacturing operations and types of coatings used. Doors are manufactured by applying adhesive to a core and frame, and then pressing a doorskin on either side of the core and frame. Doorskins are thin pieces of wood, such as veneer or fiberboard, which are typically only primed at the doorskin manufacturing location prior to being sent to a location that manufactures a door.

2.4.1.2 Flooring

The flooring subcategory includes facilities involved in the finishing or lamination of a wood building product to be used as hardwood or wood laminate flooring. Hardwood flooring is cut and grooved, and typically finished in 8-foot or 12-foot strips. Laminate flooring is becoming increasingly popular in the United States and is manufactured using adhesives (typically urea formaldehyde or melamine formaldehyde) that are applied to a paper backing to one side of a thin piece of particleboard and a decorative laminate.

2.4.1.3 Interior Wall Paneling and Tileboard

The interior wall paneling and tileboard subcategory includes the application of a coating to a panel used only as a wall covering. Interior wall paneling is usually grooved, frequently embossed, and sometimes grain printed to resemble various wood species. The substrate can be hardboard, plywood, medium density fiberboard (MDF), or particleboard. Tileboard is a premium interior wall paneling product used in areas of the home such as kitchens and bathrooms. If tileboard is manufactured at a facility, then interior wall paneling is typically manufactured at the same facility. Tileboard, however, is not always manufactured at facilities that manufacture interior wall paneling.

2.4.1.4 Other Interior Panels

The other interior panels subcategory typically includes the application of a coating to interior panels that are sold for uses other than wall paneling, such as sheathing, insulation board, pegboard, and ceiling tiles. Panels in this category are normally not embossed, grooved, or grain painted. Other interior panels are frequently cut to size after coating either by the coater or the purchaser. In addition to hardwood plywood and hardboard, softboard, fiberboard, particleboard, and MDF are other substrates that are shipped to, or produced at, wood building products facilities and used to produce coated interior panels.

Some facilities produce interior panels that are used in final products such as shelving, drawersides, cabinetry, store fixtures, display cases, and many other wood furniture components. These types of facilities that are major sources of HAP emissions will not be covered under the wood building products (surface coating) NESHAP because they are already covered under the wood furniture NESHAP (subpart JJ).

2.4.1.5 Exterior Siding, Doorskins, and Miscellaneous

Exterior siding may be made of solid wood, hardboard, or waferboard. Siding made of solid wood and hardboard is typically primed at the manufacturing facility and finished in the field, although some finishing may be performed during manufacturing on a limited basis. Exterior trim

(material made out of siding panels and used for edges and corners around the siding) is typically manufactured at the same facility and coated with the same coatings as siding.

Facilities that produce waferboard or oriented strandboard (OSB) siding typically use a coated paper overlay with a water-borne primer. Since the coated paper overlay is often added prior to the press which is considered to be part of the substrate manufacturing process, these facilities will not be covered under the wood building products (surface coating) NESHAP, but will be covered under the plywood and composite wood products NESHAP (subpart DDDD).

Doorskins are thin pieces of wood, such as veneer or fiberboard, used on the outside surfaces or facings of a door. Doorskin manufacturing is almost always performed at a separate location than door manufacturing. Also, many facilities manufacture and finish both exterior siding and doorskins at the same site.

There are several miscellaneous wood building products that are surface coated and for which there is little or no emissions or product performance information available. However, several of the miscellaneous wood building products are used on the exterior of buildings or structures which would require similar protection as exterior siding. These miscellaneous wood building products include, but are not limited to, shutters, shingles, awnings, laminated veneer lumber (LVL), and millwork that is not associated with doors and windows or flooring.

2.4.2 Performance Requirements

2.4.2.1 Doors and Windows

The majority of door and window facilities have two separate coating requirements. Doors (particularly exterior doors) and windows are affected by both inside and outside exposure that require two different coating systems with unique performance requirements. The exterior primers and prefinishes must include properties similar to those for exterior siding, including being able to withstand long-term exposure to sunlight, moisture, and temperature variation. The interior coatings may or may not be pigmented but must still resist fading due to sunlight. Many

of these products are treated with a solvent-borne wood treatment/preservative prior to finishing to resist decay and mildew. Because moulding and trim components will eventually be assembled with doors and windows, the moulding and trim coatings have the same performance requirements as the coatings applied to doors and windows.

2.4.2.2 Flooring

Wood flooring requires exceptional performance qualities including long term scratch, abrasion and stain resistance. Furthermore, it must have finishes that are cosmetically appealing. Therefore, the coating system used must be adaptable to many different stains and textures. Solvent-based stains are prevalent in this segment of the industry in order to obtain the clarity of the wood grain demanded by the customer. Low HAP water-borne stains are available but have been found by some manufacturers to cause 'fuzziness' in the appearance of the substrate.

2.4.2.3 Interior Wall Paneling and Tileboard

Coated board used for interior wall paneling is subject to industry performance specifications (consensus standards) for adhesion, hardness, stain resistance, and scrub resistance. Tileboard must meet even higher performance standards for moisture resistance, adhesion, hardness, stain resistance, and long-term useful life. Performance requirements for interior wall paneling and tileboard vary from manufacturer to manufacturer but may range from 15 to 30 years. This performance requirement far exceeds that available from formulated water-borne coatings of approximately 5 to 8 years on new wood products. Such performance requirements are met by using high-temperature aminoplast crosslinkable coatings. These coatings have been tied to solvent-borne technology where the main resins are supplied in toluene, xylene and butyl alcohols. Panel thickness, minimal void, and smoother surfaces are not as critical as in the other interior panels subcategory. Thickness is not critical as most panels in this subcategory are not multi-components or assembled into an end-use product requiring strict dimensions. Also, interior wall paneling and tileboard substrate imperfections are covered by inks, fillers, and topcoats, as opposed to other interior and exterior panel substrates.

2.4.2.4 Other Interior Panels

Other interior panels have less stringent requirements (in terms of decorative appearance, scratch and moisture resistance) on the coating performance than any other wood building products surface coating subcategory. Typical coating formulation does not include primers, undercoats, and intermediate coats usually required to protect the substrate from moisture and water damage or hide substrate imperfections. Furthermore, the use of inks and fillers are normally not required since other interior panels are not typically used for decorative purposes. Consequently, more stringent or lower HAP emission rate limits are achievable for these operations. Consistent thickness, moisture content, minimal voids, and smoother surfaces are critical to this segment of the industry, in contrast to the interior wall paneling and tileboard subcategory. These panel substrate properties are more important because reduced coating layers maintain consistent thickness throughout which is critical during the assembly of the end-product; water-borne coatings can be applied in relatively high moisture content substrates; and the minimal use of fillers and inks on the end product requires smooth surfaces as they will not be disguised or filled.

2.4.2.5 Exterior Siding, Doorskins, and Miscellaneous

Exterior siding and trim must be able to withstand long-term exposure to sunlight, moisture, and temperature variation. Also, consumers expect a warranty to be provided for this type of product. Doorskins, like siding, can be used as exterior products and also on doors in areas with higher moisture exposure potential such as bathrooms and closets. Therefore, doorskins have similar performance requirements to exterior siding and trim. Many of the miscellaneous wood products included in this subcategory have similar coating performance requirements as exterior siding, such as the need for protection from adverse weather conditions and the ability to meet warranty requirements. Coatings in this subcategory used for prefinishing siding contain more organic HAP than the primers for siding and trim in order to achieve the durability requirements. Consequently, more resin is applied resulting in the need for more coalescent solvents.

2.4.3 Coating Usage

The following section discusses the typical coating systems used at the different wood building products facilities based on a sample of the industry. The following paragraphs explain the differences and the unique coating usage characteristics of each subcategory.

2.4.3.1 Doors and Windows

Facilities in this subcategory use a combination of basecoats, primers, sealers, stains, and topcoats depending on the decorative requirements of the final product or whether the product will be used as an interior or exterior product or both. In addition to the previously mentioned coatings, the door and window subcategory is the only subcategory where the products are treated with a solvent-borne wood treatment/preservative prior to finishing to resist decay and mildew. More than half of the coatings used in this subcategory are wood treatment/preservatives.

Although some doors are manufactured with only a factory-applied primer, most are coated with a prefinish system that must meet industry performance standards. A typical prefinish system consists of three steps: stain, sealer, and precatalyzed lacquer. If the door is preprimed, the steps could consist of two topcoats: tinted topcoat and clear topcoat. The edges are usually coated with the same coatings as the door faces. The steps may vary depending upon the quality and aesthetics of the end product desired.

A few door and window manufacturers have been able to switch to water-borne coatings and UV topcoats and meet the application and end use performance requirements. However, conventional solvent-based coating technology is still the primary coating technology used in the industry, particularly for those products with a long warranty, because they tend to be more durable and provide better protection than the water-borne coating technology.

2.4.3.2 Flooring

The primary finishing steps for flooring are stain (1 coat), sealer (1-5 coats), and topcoat (1-3 coats). Some woods require fillers to fill the pores in the wood; however, such fillers are commonly 100 percent solids and therefore not an emission source. Solvent-based stains are prevalent in the industry in order to obtain the appearance, i.e., clarity of the wood grain, demanded by customers. No- or low-HAP water-borne stains are also available, but can cause 'fuzziness' in the appearance of the wood grain. The industry uses UV topcoats and sealers because of the durability properties imparted to the flooring surface and they essentially contain no HAP.

2.4.3.3 Interior Wall Paneling and Tileboard

Thermoplastic latex topcoats and sealers are used on interior wall paneling in order to provide physical and decorative performance. Interior wall paneling facilities use a combination of water-borne, solvent-borne, and in rare instances, UV coatings. Finishing steps typically include up to five or six layers of coatings, usually including two to three layers of inks on the final product. Line speeds of 30 to 35 boards per minute require that a coalescent solvent be used which comes out of the wet film without leaving cure blisters and without leaving residual solvent in the coating film or substrate. Residual solvent can lead to boards that remain tacky long after they are dry, creating a problem known as "blocking."

Tileboard coating systems must be moisture resistant and quick drying. The coatings that provide sufficient water resistance for tileboard have traditionally been tied to solvent-borne technology with specific resin and solvency requirements. Totally water-borne systems have improved, but have not consistently achieved the premium performance requirements demanded by consumers and industry standards. Furthermore, solvent-borne coatings remain the choice when smoothness, toughness, high shine, or water resistance is desired. These characteristics allow tileboard surfaces to be less prone to retain dirt on their surface. Tileboard coatings can be formulated with various resin systems, water-borne and solvent-borne fillers, basecoats and inks, and solvent-borne topcoats. UV coatings are not used in tileboard surface coating operations because they

cannot be applied at the same relative thickness and speed as that of water-borne or solvent-borne coating systems.

2.4.3.4 Other Interior Panels

Since the end-use products of other interior panels are not typically associated with high performance coating requirements, the coating systems are simpler with regards to film thickness and final appearance. Coating technology ranges from low-grade primers to high-grade UV topcoats depending on the performance dictated by the end use. Flat surfaces and reduced coating thickness are suitable characteristics for UV technology. Also, panels in this subcategory are finished with a minimal number of coatings to produce single colors or meet end use performance requirements.

2.4.3.5 Exterior Siding, Doorskins, and Miscellaneous

The coatings used for finishing exterior siding products are primarily primers; a few facilities prefinish with basecoats and stains/topcoats. These products are made using substrates that tolerate high coating line temperatures. In previous years, this industry segment has moved from solvent-borne to water-borne coating systems without organic HAPs and today the qualified coatings for exterior siding and trim are mostly water-borne but do contain small amounts of organic HAP. Doorskins are also usually only primed, with a small amount of prefinishing. Miscellaneous wood building products included in this subcategory are typically primed to provide protection from adverse weather conditions and to meet warranty requirements with prefinishing often completed in the field. Primers make up the majority [82 percent] of the coatings used at facilities in the exterior siding, doorskin, and miscellaneous subcategory.

2.4.4 Organic HAP Emissions

The following section discusses the typical uncontrolled organic HAPs emitted by the different wood building products surface coating operations based on a sample of the industry. The following paragraphs explain the differences and the unique emission characteristics of each subcategory.

2.4.4.1 Doors and Windows

The doors and windows subcategory emits the second largest amount of organic HAP emissions in the industry. The higher organic HAP emissions are related to the continued use of conventional solvent-based coatings systems for prefinishing doors and windows. The large amounts of xylene and toluene primarily come from dilution requirements of the commercial resin systems used in this subcategory and necessary in order to achieve the performance requirements and coating thicknesses when applied to small and angular shaped surfaces.

2.4.4.2 Flooring

The flooring subcategory has the lowest organic HAP emissions in the industry. The low organic HAP emissions are primarily due to the widespread use of UV topcoats and sealers that essentially contain no HAP. The use of UV technology is directly related to the relative flatness of the surfaces coated for which this technology is best suited for application. Also, many flooring facilities are beginning to switch from solvent-based stains to low- or no-HAP water-borne stains.

2.4.4.3 Interior Wall Paneling and Tileboard

The interior wall paneling and tileboard subcategory contains the highest organic HAP emissions of any of the subcategories. The high organic HAP emissions are directly related to the continued use of solvent-borne technology to meet the premium performance requirements demanded by consumers and industry standards. The main resins used in this subcategory are often supplied in xylene, which is the reason for the large amount of xylene emitted. Ethylene glycol butyl ether (EGBE) and methanol are also two main organic HAPs that are intentionally added by the coating suppliers. These organic HAPs are added due to the higher production line speeds that require that a coalescent solvent be used which comes out of the wet film without leaving cure blisters and without leaving residual solvent in the coating film substrate. Also, an alcohol is required to sustain high production speed during the drying of water-borne coatings.

2.4.4.4 Other Interior Panels

The other interior panels subcategory emits the second smallest amount of organic HAP in the industry. The small amount of diverse organic HAP emissions is related to the coating technology used, which ranges from low-grade primers to high-grade UV topcoats. The HAP contents of the coatings used in the subcategory also vary due to the wide range in product quality, performance, substrate characteristics, lack of a consensus standard, and end use. However, typically the emissions are low because of the minimal amounts of coatings required for the typically non-decorative interior panels.

2.4.4.5 Exterior Siding, Doorskins, and Miscellaneous

The exterior siding, doorskins, and miscellaneous subcategory is in the middle of the industry regarding organic HAP emissions. The organic HAP emissions are mainly from the coatings used for prefinishing siding and trim. Even though most of the coatings used in this subcategory have been switched to water-borne coatings, these coatings still contain some organic HAP due to the performance requirements of the final product. The coatings in this subcategory must be able to withstand long-term exposure to sunlight, moisture, and temperature variation along with standard consumer warranties associated with the product.

2.4.5 Application Equipment

2.4.5.1 Doors and Windows

Doors and windows can be coated on hang lines or flat lines using manual or automated spray systems. Due to the indentations in most doors, roll coating is often not feasible. The capacity of a typical door coating line which is used to apply a decorative coating will be much lower, as low as 100 doors per day, compared to doorskin coating lines where up to 70,000 doorskin units can be primed in a day. Window frames and joinery are typically finished with either flow coaters or spray guns. Some doors and windows are dipped in a wood treatment/preservative prior to finishing. This technique is preferred when products contain curvatures, angles, and edges that need to be protected.

2.4.5.2 Flooring

Hardwood flooring facilities apply coatings using roll coaters. The adhesive used at laminate flooring facilities is also usually applied with a roll coater. Alternatively, the decorative laminate and backing paper may be applied to the substrate using pressure and high temperatures.

2.4.5.3 Interior Wall Paneling and Tileboard

Most interior wall paneling is coated using roll coaters and in some rare occasions is coated using spray equipment. Tileboard facilities typically coat using a combination of roll coaters and curtain coaters. Some tileboard facilities (due to surface embossing) are restricted to the use of curtain coaters for application of fillers, basecoats, and top coats. As stated previously, UV coatings cannot be applied to the required thickness using traditional curtain coater technology. Roll coaters are used for topcoat application on flat surfaced tileboard. Gravure printers are used to apply any ink print to interior wall paneling and tileboard final products.

2.4.5.4 Other Interior Panels

Other interior panels are coated using roll coaters, or sprayed and then roll coated. Thickness requirements mandate the use of these application techniques. Furthermore, these application equipment techniques are best suitable for UV cure technology.

2.4.5.5 Exterior Siding, Doorskins, and Miscellaneous

Exterior siding, doorskin, and miscellaneous coatings are applied using many different coating application methods, including: direct roll coating (DRC), reverse roll coating (RRC), curtain coating, automatic air-assisted airless guns or automatic high-velocity low-pressure (HVLP) guns. Components of exterior siding such as exterior trim may also be coated using the same coating application methods to match the performance as well as the decorative requirements of the exterior siding. Shutters and other miscellaneous exterior products are typically roll, spray, or dip coated with a protective and/or decorative coating. LVL is typically roll coated or sprayed with a protective sealer.

2.4.6 Control Device Applicability

2.4.6.1 Doors and Windows

Door and window facilities reported controlling some organic HAP emissions with add-on control devices, including carbon adsorbers and catalytic oxidizers. The use of add-on control devices is better suited to this segment of the industry due to high inlet concentrations associated primarily with the continued use of solvent-borne coatings containing significant amounts of organic HAP.

2.4.6.2 Flooring

Thermal oxidizers were reported to be used to reduce the organic HAP emissions associated with surface coating of flooring products. The use of thermal oxidizers is more amenable to this segment of the industry due to high inlet concentrations associated primarily with the use of solvent-borne stains.

2.4.6.3 Interior Wall Paneling and Tileboard

Thermal oxidizers were reported to be used to reduce the VOC emissions associated with surface coating of interior wall paneling and tileboard products. (Many of the VOC contained in the solvents are also organic HAPs.) The use of thermal oxidizers is available to this segment of the industry due to high inlet concentrations.

2.4.6.4 Other Interior Panels

None of the facilities responding to the ICR reported any add-on control devices related to the organic HAP emissions associated with surface coating of other interior panel products. Extremely low organic HAP concentrations in the coatings used and UV cure technology makes the application of organic HAP control equipment ineffective.

2.4.6.5 Exterior Siding, Doorskins, and Miscellaneous

None of the facilities responding to the ICR reported any add-on control devices related to the organic HAP emissions associated with surface coating of exterior siding, doorskins, or miscellaneous products. Very low inlet concentrations due to the use of low- or no-HAP water-borne coatings do not support installation of control devices for this segment of the industry.

2.4.7 Conclusions and Subcategorization Rationale

2.4.7.1 Doors and Windows

This segment of the industry is faced with two separate coating problems due to the exposure to both inside and outside environments, which require radically different performance requirements. First, the primers and prefinishes that will be subject to exterior conditions must have properties similar to those of exterior siding. Second, the coatings subject to interior conditions must have properties similar to interior coatings that may or may not be pigmented, but must still resist ultraviolet [sunlight] damage.

Related to those stringent performance requirements, doors and windows are the only products in the industry that require solvent-borne wood treatment/preservatives prior to finishing. More than half of the coatings [57 percent] reported by the facilities in the database are high-HAP content wood treatment/preservative coatings. These are low-solids solvent-borne coatings that must penetrate the wood to protect the wood from moisture and decay. There are no low- or no-HAP alternatives for these coatings and the average organic HAP content was 19.5 lb HAP/gal solids based on a sample of door and window facilities.

The sharp angles, small areas, and openings associated with moulding and trim of doors and windows are more difficult to coat than the other relatively flat surfaces coated in the other subcategories of this industry. Door and window surface coating operations utilize either hang or flat lines and coat using spray systems due to non-flat surfaces that prevent the use of roll coating. Line speeds for doors and windows are also much slower than most "flat" products (e.g., 100

doors per day versus 70,000 doorskins per day). Dip tanks are sometimes used for the wood treatment/preservative coatings, which allows the product to soak in the coating.

Although some doors are marketed with only a factory-applied primer, most are coated with a prefinish system that must meet industry performance standards. The prefinish system used is either solvent-based aminoplast technology or conventional solvent-based coating technology. Conventional solvent-based coating systems are typically used for interior doors while solvent-based aminoplast technology is used primarily for exterior doors to impart weather resistance characteristics without compromising aesthetic requirements. The commercial resin systems available for mixing with aminoplast coats are diluted with xylene and/or toluene. The performance requirements and various coating operations of this industry segment justify its subcategory.

2.4.7.2 Flooring

Flooring is limited by the coating types used including the predominant use of solvent-borne stains and UV sealers and topcoats. Based on a sample of the industry, UV sealers and topcoats accounted for approximately 65 percent of all coatings and zero (0) HAP emissions. Stains made up the other 35 percent of coatings and averaged 23.5 lb HAP/gal solids. No other industry segment has this unique finishing scenario. Solvent-based stains are prevalent in the industry and some industry representatives argue they are needed in order to obtain the clarity of the wood grain. Recent technology advancements over the past few years have moved to water-borne stains which in the past have tended to cause 'fuzziness' in the appearance of the wood grain. In addition to the hardwood flooring products, the use of adhesives in laminated flooring distinguishes this subcategory from the remainder of the industry and consequently provides sufficient justification for a subcategory.

2.4.7.3 Interior Wall Paneling and Tileboard

Interior wall paneling and tileboard are the primary components of the interior panel product subgroup of wood building products. Product specifications are established by consensus standards for both interior wall paneling and tileboard. Interior wall paneling has more decorative

coating requirements than other subcategories and is typically manufactured at the same facilities as tileboard, although in much smaller quantities. Tileboard, a premium interior wall paneling, has even more stringent product performance requirements (i.e., adhesion and hardness standards, household stain, scrub and moisture resistant while maintaining a relative smooth surface) compared to standard interior wall paneling.

Decorative appearance (embossed, grooved or grain printed) and performance of the intermediate and end products require multiple coating layers and coating steps far exceeding other subcategories. Production speeds of 30 to 35 boards per minute require that coalescent solvents be used which come out of the wet film without leaving cure blisters and without leaving residual solvent in the coating film or substrate. Residual solvents can cause product 'blocking' (products sticking together) during storage. Tileboard coatings average 5.9 lb HAP/gal solids and interior wall paneling coatings average around 1.6 lb HAP/gal solids. Both products utilize high-temperature aminoplast crosslinkable coatings which are used on substrates that can tolerate higher processing temperatures. These coatings have traditionally been tied to solvent-borne technology where the main resins are supplied in toluene, xylene, and butyl alcohols. The aforementioned coating elements of this industry segment justify a separate subcategory.

2.4.7.4 Other Interior Panels

Other interior panels make up the rest of the interior panel product subgroup of wood building products. In this segment of the industry, product specifications are established between the buyer and seller and not by consensus standards. These products are used for interior applications other than wall paneling or tileboard and use fewer coating layers. Other interior panels typically are produced with a single color and have fewer coating steps, less stringent product performance requirements, and some UV applications which allow lower organic HAP emission rates. Primers and basecoats comprise 32 percent of all the coatings used on these products and average 1.8 lb HAP/gal solids; prefinishes (clearcoats, paints/inks, sealers, stains, and topcoats) make up 47 percent of the coating usage and average 1.7 lb HAP/gal solids. These product differences justify a subcategory.

2.4.7.5 Exterior Siding, Doorskins, and Miscellaneous

This industry segment involves exterior products that must have coatings able to withstand extreme and long-term weather conditions. The predominant use of primers (82 percent of all coatings) relates to a compatibility issue for all subsequent coating layers and warranty provisions. These primers are low HAP-content coatings that average 0.1 lb HAP/gal solids. The prefinishes, including basecoats, sealers, stains, and topcoats, have a higher average HAP content, 0.6 lb HAP/gal solids, and comprise the remaining 18 percent of the coatings used by these facilities. The typical siding facility produces mainly primed siding, but also has a small percentage of prefinished material as well. Also, many exterior siding facilities also coat doorskins at the same location. The miscellaneous wood building products in this subcategory are often used for exterior purposes and have the same coating requirements as exterior siding and trim.

In summary, an important aspect in the determination of subcategories for wood building products surface coating operations relates to the differences in the performance requirements [decorative, smoothness, scratch resistance, moisture resistance, etc.] of the coatings used which relates to the type [solvent-borne vs. water-borne] and the amount of coatings required to meet the end-product specifications. The effectiveness of an applied coating system depends on the following: the extent to which the adhesion of the coating to the substrate or other coating layers can take place, the chemical nature and physical properties of the coating material, and the severity of service environment. The durability and quality of coatings depend on cohesion and adhesion properties. Coatings and surface multiplicity differences as outlined in this memorandum justify the subcategorization of the regulated industry.

2.5 REFERENCES

1. Midwest Research Institute. September 1998. Preliminary Industry Characterization: Wood Building Products Surface Coating.

2. Research Triangle Institute. *Radiation-Cured Coatings.* [Online]. Available: http://cage.rti.org/altern.cfm/. September 29, 1999.

3. Lluberas, L. R., EPA/CCPG to Project File, Docket A-57-92. November 10, 2000. Documentation of Database Containing Information from Section 114 Responses and Site Visits for the Wood Building Products (Surface Coating) NESHAP.

4. Hanks, K., Bullock, D., and Nicholson, B., MRI. April 28, 2000. Summary of Responses to the 1998 EPA Information Collection Request (MACT Survey) -- General Survey.

5. Boerst, T., ABTco, to Reeves, D., MRI. September 7, 1999. Wood Building Products Finishing MACT.

6. Reeves, D., Marshall, A., and Saltis, A., MRI, to Almodovar, P. September 15, 1998. Site Visit - Perstorp Flooring, Incorporated; Garner, North Carolina Integrated Rule Development for Surface Coating of Flatwood Paneling: PMACT and Pre-BAC Determination.

Chapter 3
Emission Control Techniques

This chapter discusses organic HAP emission control techniques that are currently being used for surface coating operations at wood building product facilities. Section 112 of the Clean Air Act (CAA) requires the U. S. Environmental Protection Agency (EPA) to establish emission standards for all categories of sources of HAP.

There are several approaches to reducing organic HAP emissions (and VOC emissions) resulting from wood building products surface coating operations. The primary approach, focusing on pollution prevention, is to substitute currently used materials for low- or no-HAP materials (coatings, adhesives, inks, thinning solvents, cleaning materials, etc.). Waterborne coatings and radiation-curable coatings, such as ultraviolet (UV) or electron beam (EB) coatings, do not contain or emit significant amounts of organic HAP compared to conventional solventborne coatings. High-solids coatings can also be used to reduce organic HAP emissions. Solventborne coatings, powder coatings, radiation-curable coatings, and in some cases waterborne coatings can all be formulated as high-solids coatings. Only waterborne coatings and radiation-curable coatings will be discussed in this chapter because they are the most common coatings currently being implemented by the industry.

Another method used to limit organic HAP emissions resulting from wood building products surface coating operations is the use of capture systems and add-on control devices to destroy or remove the organic HAP from the air stream. Add-on control devices can be divided into two categories: combustion devices and recovery devices. The primary combustion control devices

used in the industry are thermal and catalytic oxidizers. The primary recovery control devices used in the industry are carbon adsorbers. Capture systems and add-on control devices are also discussed in this chapter.

Table 3-1 summarizes available information on the emission reduction techniques used by wood building products surface coating operations. The information was obtained from the wood building products ICRs sent to facilities in 1998. The two major factors that influence the emission reduction technique used are: (1) the applicability of Federal, State, or local regulations affecting wood building product surface coating operations; and (2) the availability of low- or no-HAP coatings meeting end use performance requirements of the various wood building products.

3.1 POLLUTION PREVENTION TECHNIQUES

The following sections discuss pollution prevention alternatives for reducing organic HAP emissions associated with wood building products surface coating operations. Some of these alternatives, such as the use of waterborne coatings, are widely used throughout the wood building product industry, while others, such as UV-cured coatings and EB-cured coatings, are used in a smaller number of applications. The low- or no-HAP coatings that are currently in use throughout the industry, the emerging technologies that are beginning to be introduced throughout the industry, and the organic HAP reductions that each one of these offers are identified and discussed in this section. The organic HAP reductions identified in this chapter have been calculated based on a source switching from higher-HAP coatings to low- or no-HAP coatings. Finally, the types of surface coating operations for which these coatings are currently or could potentially be used are also identified and discussed herein.

The types of coating materials currently used by wood building product surface coating operations in general have been identified previously in Chapter 2. Coating types include paints, stains, sealers, topcoats, basecoats, primers, enamels, inks, adhesives, adhesive-bonded laminates, or temporary protective coatings. Low- or no-HAP coatings have been developed for almost all of these coating types. The most common low-or no-HAP coatings that are being used or

potentially could be used to replace the traditional solventborne coatings include waterborne and radiation-curable coatings, such as UV-cured coatings and EB-cured coatings.

3.1.1 Waterborne Coatings

Waterborne coatings are coatings in which water is the main fluidizing media (i.e., the fluid able to dissolve the resin). Resins that are associated with waterborne coatings have a distinctly different chemistry than those associated with solventborne coatings. The primary difference in the two types of resins is the hydrophilic (i.e., water compatibility) properties of the waterborne coating resins. Almost any resin can be modified for use with waterborne coatings. The most common waterborne coating resins are acrylics, epoxies, vinyls, alkyds, and polyurethanes.[1]

There are three distinct types of waterborne coatings according to how the resin is liquidized. Waterborne coatings may be emulsions, solutions, or dispersions.[1] The various resins determine the cured film properties of the finish. However, there is one common feature: each type of waterborne coating employs water as the major solvent or carrying liquid for the resins.[2,3] The three waterborne coating types are discussed in more detail below.

An emulsion is a colloidal suspension (i.e., the resin is in the form of discrete water-insoluble spherical particles of high molecular weight uniformly dispersed in water). Waterborne emulsion coatings can be called water-emulsion coatings and are also referred to as latex coatings.[1]

A solution is a homogeneous dispersion of one or more substances (i.e., resins with low molecular weight) into another substance. The resins associated with waterborne solution coatings contain chemically reactive groups which form polar groups that allow water-reducibility and, thus, true solutions of resins in water. Waterborne solution coatings are also called water-soluble coatings.

Table 3-1. Emission Reduction Techniques Used by Coating Process/End Use[a]

Coating/industry segment	No. of coatings using emission reduction techniques							
	UV	EB	Non-HAP[b] waterborne	Non-HAP[b] solventborne	HAP-containing waterborne coatings + capture/control	HAP-containing solventborne coatings + capture/control	HAP-containing waterborne coatings (no emission reduction)	HAP-containing solventborne coatings (no emission reduction)
Wood building products surface coating operations								
Doors and Windows[c]	7	0	28	9	1	3	31	80
Flooring[d]	8	0	0	2	0	1	0	3
Interior Wall Paneling and Tileboard[e]	1	0	18	0	2	5	6	12
Other Interior Panels[f]	19	1	27	2	0	0	26	6
Exterior Siding, Doorskins, and Miscellaneous[g]	2	0	31	0	0	0	38	0

[a] These data are from a 1997 industry survey and the information collection request (ICR) sent to wood building product manufacturers conducted in 1998 by the EPA.
[b] The non-HAP waterborne and solventborne coatings may still potentially include some amount of VOCs.
[c] The emission reduction data for the doors and windows subcategory represents 11 facilities (9 companies).
[d] The emission reduction data for the flooring subcategory represents 5 facilities (1 company).
[e] The emission reduction data for the interior wall paneling and tileboard subcategory represents 6 facilities (4 companies).
[f] The emission reduction data for the other interior panels subcategory represents 13 facilities (5 companies).
[g] The emission reduction data for the exterior siding, doorskin, and miscellaneous subcategory represents 12 facilities (6 companies).

A dispersion coating is a system of dispersed resin particles of a medium molecular weight (not as high as the emulsion resins and not as low as the solution resins) suspended in a liquid. The dispersion resins have slight polarities that allow some degree of solubility. Because of the slight solubility of the resins in water, the dispersion formulations are not true solutions or emulsions.[3] However, waterborne dispersion coatings are similar enough to waterborne emulsion coatings that they are generally considered the same paint type. Waterborne dispersion coatings can be referred to as water-dispersible coatings; however, this terminology is imprecise because all waterborne resins are water-dispersible.[1]

Waterborne coatings exhibit unique film properties, depending on the type of resin used in the formulation. The water-emulsion coatings are of a higher molecular weight and, therefore, offer advantages in the areas of durability and chemical and stain resistance.[2,3] Water-soluble formulations offer high gloss, clarity, and good application properties. However, water-soluble films are not as durable as the water-emulsions, and the properties of the coatings are very dependent on molecular weight. Water-dispersible coatings exhibit properties of the water-emulsion and water-soluble coatings. The water-dispersible coatings offer high gloss and good application properties and are also durable and chemical- and stain-resistant.[2]

Waterborne coatings can be formulated for air/force drying or for curing, depending on the resins in the formulation.[2,3] Waterborne coatings may cure in the same manner as solventborne coatings. Curing (the process of changing the freshly applied (liquid) coating to a finished (solid) paint film) occurs through a variety of cross-linking reactions. Cross-linking reactions occur when partially polymerized (i.e., partially converted from a simple molecule to a more complex molecule) resins dissolved in a solvent are heated. As the solvent (in this case water) evaporates, the resin molecules form new chemical bonds that cannot be dissolved by adding solvent.[1]

There are several types of coatings that cure by cross-linking; however, the most common types are oxidizing and heat cross-linking coatings. In oxidizing coatings, a cross-linking reaction with atmospheric oxygen is triggered when the unsaturated resin is exposed to the air after the solvent has evaporated. The oxidation process will occur slowly at room temperature or faster at higher

temperatures. In heat cross-linking coatings, a certain temperature is required to trigger cross-linking and curing. At room temperature, the coating will remain sticky on the surface and remain uncured until heat is added.[4]

Waterborne coatings may also cure via latex coalescence.[2,5] Latex coalescence occurs when a resin is dissolved in solvent, then dispersed in water. Either the solvent or water then evaporates, leaving resin particles dispersed in the remaining solvent or water. As the remaining liquid evaporates, the pressures force the resin particles to coalesce (i.e., form a coating). No polymerization takes place; these are a special form of nonconvertible coatings.

The organic HAP content of waterborne coatings varies substantially. Waterborne coatings are usually not completely free of organic HAP. Solvents are typically added to allow adequate coalescence and film formation, as well as color penetration for pigmented materials.[6] Based on information from the project database, waterborne coatings have an average organic HAP content of approximately 0.8 pounds per gallon of solids (lb HAP/gal solids) or 96 grams of organic HAP per liter of solids (g HAP/L solids). The average solids content of the waterborne coatings in the data base is 33 percent by volume. Compared to the organic HAP content of solventborne coatings, the waterborne coatings represent an approximate reduction of 93 percent in organic HAP content per volume of solids.[7] The actual overall organic HAP emission reduction for a specific wood building product facility depends on the number of finishing steps for which waterborne coatings can be used in place of higher-HAP coatings.

3.1.2 Radiation-Curable Coatings

Radiation curing is a technology that utilizes electromagnetic radiation energy to affect chemical and physical change of organic finish materials by the formation of cross-linked polymer networks.[8] There are two radiation curing processes used in the wood building product surface coating industry: UV-curing and EB-curing. The UV-curing process is currently being used or implemented throughout all segments of the wood building product industry. The EB-curing process is much more rare in the industry. The two radiation curing processes are discussed in more detail in the following sections.

3.1.2.1 Ultraviolet-Curable Coatings

One type of radiation used for curing is UV light. The primary components of UV-curable coatings are multifunctional resins (acrylates, acrylated oligomers), diluent monomers, and photoinitiators. The photoinitiator absorbs the UV light and initiates free radical polymerization, the curing process.[8] The diluent monomer (diluting substance) serves as a viscosity modifier for the coating, enabling the coating to be applied to the substrate. It is similar to a solvent in this regard. In traditional UV coatings, however, most of the diluent also polymerizes and becomes part of the coating film.[3] However, the small amount of diluent in the coating that does not reach the piece and, thus, is not incorporated into the final film, is emitted.

Ultraviolet-curable coatings are convertible coatings; the curing process is via polymerization. The curing process for UV-curable coatings is very fast. As the substrate is exposed to UV radiation, the photoinitiator absorbs the light and initiates near-instant polymerization. Polymerization, or curing, of the material is rapid, providing a final film that is stain-, scratch-, and mar-resistant.[8,9] Coated pieces can immediately be stacked because the curing is so rapid. Other properties of the UV-cured film include heat resistance, durability, and good build.

Specialized equipment is required to implement a UV-curing system in existing industrial processes. UV equipment utilizes a non-thermal curing technique, which does not rely on the production and transfer of heat to initiate chemical reactions. Electricity is the sole source of energy for both radiation curing processes; however, for the electrical energy to be useful, it must be converted by the radiation curing equipment to a more convenient form which will affect a chemical curing reaction. The electricity is converted by means of a gas plasma into UV light which then initiates the polymerization reaction and curing.[8]

Ultraviolet-curable coatings do not typically emit substantial organic HAP (due to the polymerization process discussed above) and often contain up to 100 percent solids when 100 percent of the components react to form the coating. Some UV-curable coatings are formulated such that some conventional solvent that volatilizes is added along with the diluent monomer. Based on information from the project database, the organic HAP content of UV-

curable coatings is approximately 0.7 lb HAP/gal solids (84 g HAP/L solids). The average solids content of the UV-curable coatings in the project data base is 88 percent by volume. Compared to higher-HAP solventborne coatings, UV-curable coatings represent an approximate reduction of 84 percent in organic HAP content per volume of solids.[7] However, as previously stated, a facility's overall emission reductions depend on the number of coating steps used by a facility that switches from solventborne to UV-curable coatings.

3.1.2.2 Electron Beam-Curable Coatings

Electron beam-cure (EB-cure) systems are another type of radiation curing system. The primary components of EB-curable coatings are also multifunctional polymers (acrylates, acrylated oligomers) and diluent monomers. However, EB-curable systems do not require photoinitiators because the energy output of the electrons is sufficient to initiate free radical polymerization within the coating. Methacrylates are generally used where the cure is initiated by EB exposure because the multifunctional monomer does not UV-cure well.[8] Electron beam-cure systems utilize energy from an electron generator, in the form of a highly directed beam or curtain of electrons, and is capable of curing a monomer/unsaturated polymer system by free radical-induced polymerization.

Specialized equipment is required to implement an EB-curing system to existing industrial processes, however the cost of adding a new radiation-cure line is substantially less than for adding a new solventborne line.[10] The equipment utilizes a non-thermal curing technique, which does not rely on the production and transfer of heat to initiate chemical reactions. Electricity is the sole source of energy for both radiation curing processes; however, for the electrical energy to be useful, it must be converted by the radiation curing equipment to a more convenient form which will affect a chemical curing reaction. Electrons from an electric heated filament or cathode are accelerated to high energies where they can be injected directly into the coating to initiate the polymerization reaction.

Electron beam-curable coatings do not typically contribute substantial organic HAP emissions (due to the polymerization process discussed above) and can contain up to 100 percent solids

when 100 percent of the components react to form the coating. Currently, only one facility within the project database is using an EB-curable coating; consequently, the data is limited. The organic HAP content of this EB-curable coating is 0.00 lb HAP/gal solids (0.00 g HAP/L solids). The solids content of the EB-curable coating in the project data base is 99.9 percent by volume. Compared to solventborne coatings, using this EB-curable coating represents a 100 percent reduction in organic HAP content per volume of solids.[7] As previously stated, a facility's overall emission reductions depend on the number of coating steps used by a facility that switches from solventborne to EB-curable coatings.

3.1.3 Applicability of Low- or No-HAP Coatings

Both solventborne and waterborne coatings are used extensively in wood building products surface coating operations.[7] In recent years, the industry and its coating suppliers have made significant strides in reformulating most of the solventborne coatings, as described above, to low- or no-HAP coatings. However, some of these low- or no-HAP coatings may not meet all of the industries' performance specifications for specific subcategories of the wood building products surface coating industry. Therefore, this section identifies the subcategories that currently use low- or no-HAP coatings and discusses the shortcomings of low- or no-HAP coatings that prevent their current use in all subcategories.

3.1.3.1 Waterborne Coatings

Waterborne coatings are currently being used, at least in part, by all wood building products surface coating subcategories.[7] However, the waterborne coatings currently available are better suited to certain applications than others. For example:

- Open-pore woods are easier to coat with waterborne coatings than filled-pore woods;
- Darker woods sometimes appear cloudy when coated with waterborne coatings, though the clarity has improved over the last 10 years;
- Waterborne coatings do not have the rubbability of solventborne coatings, and the finish is therefore not as glossy where a glossy finish is required; and
- Waterborne coatings may require a modified drying method (e.g., increased airflow and temperature).[6]

Some facilities may be able to use waterborne coatings for some coating steps but not all. According to coating suppliers, in certain applications only solventborne coatings can be used because of the problems of grain raising.[6] Grain raising is a swelling of the fibers in the wood due to the absorptance of a liquid, such as water. Grain raising causes the surface of the wood to look and feel rough.

In addition, some products (e.g., tileboard, fire-resistant paneling) may require solventborne coatings to provide good water, weather, and fire resistance. Finally, quick drying time is another reason why manufacturers use solventborne coatings, especially when fast production line speeds are used. The coating needs to be dry, hard, and cool prior to packaging, otherwise the products have the potential to stick together when stacked, causing defects or reject material. This problem is sometimes referred to as "blocking."[11]

3.1.3.2 Ultraviolet-Curable Coatings

Ultraviolet-curable coatings are currently used in several subcategories in the wood building products surface coating industry.[7] Ultraviolet-curable coatings can be applied using spray equipment, roll coaters, or curtain coaters. The main problem associated with UV-curing is the inability to cure surfaces that do not get direct exposure to the radiation.[8] Therefore, UV-curable coatings are best if used on flat line process operations.[12] There are several wood building products that typically are coated using flat line process operations, including panel and reconstituted wood products, doorskins, and hardwood flooring. Therefore, the potential exists for UV-curable coatings to be used in those subcategories of the wood building products industry where flat line operations exist, and some companies see progress in this direction as discussed in Section 3.1.2. Currently, the industry is conducting studies in the area of three-dimensional UV-curing so that UV-curable materials may experience even more widespread use in the future.[13]

Ultraviolet-curable coatings are feasible and demonstrated for surface coating operations in which the pieces are flat, with no significant carvings or recessed areas. There are two types of UV-curable coatings. One type is applied via a curtain coater, roll coater, or similar flat line apparatus. The UV-curable coatings applied by these methods typically are almost 100 percent

solids with an organic HAP content close to zero.[8] The second type of UV-curable coating is applied using conventional spray application equipment.

3.1.3.3 Electron Beam-Curable Coatings

Even though electron beam-curable coatings are currently rare in the wood building products surface coating industry, there are several advantages of EB-curing systems over UV-curing systems.[7] Electron beam-curing systems are capable of curing thicker or more heavily pigmented coatings than UV-curing systems, because electrons are far more penetrating than UV light.[14] Another advantage is that EB-curing systems cure much faster than UV-curing systems. Along with the advantages mentioned above, the EB-curing system achieves the same quick start and stop and has minimal space requirements, the low or zero organic HAP emissions, and the rapid production potential of the UV-curing systems.[14]

The disadvantages to using EB-curing systems have, however, prevented the implementation of the curing process throughout the wood building products surface coating industry. Electron beam-curing systems require an inert gas flush (i.e., nitrogen or argon) to keep air out of the electron radiation area. This is to prevent electron radiation (EB-curing) in air which can create ozone and other harsh irritant gases that are severe health hazards for humans. Workers must also be kept away from the inert gas due to the lack of oxygen. Also, the radiation source of EB-curing systems is dangerous to workers, and must be shielded and protected using safety interlocks to ensure workers do not accidentally get close enough to be harmed.[14]

EB-curing lines, unlike solventborne lines, do not require explosion proof equipment, thermal drying ovens, LEL monitoring, and air pollution control equipment. Therefore, EB-curing lines do have some benefits over solventborne lines.[10] The data suggest that the disadvantages to using EB-curing systems have outweighed the advantages for the wood building product industry. UV-curing systems are more typically being used due to lower installation costs.[8] The higher installation costs associated with EB-curing systems are mainly due to the necessary precautions required to ensure worker safety.

3.2 CAPTURE SYSTEMS

Capture systems are designed to collect solvent-laden air and direct it to a control device. In most wood building products surface coating operations, solvent is removed from the coated wood building product by evaporation in and around the coating applicator and in the subsequent curing oven. The exhaust from the coating applicators and ovens and the associated organic HAP emissions are only partially captured, if at all, and typically not controlled.

Differences in capture efficiency contribute much more to the variation in overall efficiencies than the choice of control device. Reported capture efficiencies, as listed in Table 3-2, ranged from estimates of less than 26.5 percent to the 100 percent capture which is assumed for systems meeting the requirements of permanent total enclosures (PTEs). Test procedures are available to determine capture efficiency and to confirm the presence of PTEs.[15,16]

Capture systems can be improved by extending the system to collect additional solvent-laden air from other operations, such as mixing/thinning operations and cleaning operations, by constructing additional hooding and enclosures. Capture can be improved to (nearly) 100 percent for any given production line or group of production lines by retrofitting walls and increasing ventilation to meet the requirements of a PTE. In PTEs, all air flow is into the enclosure except for exhaust points, which are ducted to an afterburner. In order to meet the criteria for a PTE, the following must apply:[17]

- The sum of the areas of all openings (doors, windows, etc.) must be less than 5 percent of the sum of the enclosure's surface area (walls, floor, and ceiling).
- Air must flow inward at all openings with an average face velocity of at least 200 feet per minute (ft/min).
- All sources emitting VOCs inside the enclosure must be "distant" from any openings (at least 4 equivalent diameters).
- All exhaust streams must be directed to a thermal oxidizer or other final control device.
- All windows and doors not counted in the 5 percent of area rule must be closed during normal operations.

Table 3-2. Add-On Control Efficiencies Currently Achieved by End-Use Product[a]

End-use product	Method of control	(1) Range of CE achieved, %[b]	(2) Range of DE achieved, %[c]	Best OCE achieved by a particular line, %[d] (3) CE	(4) DE	(5) OCE [(4) X (5)]
Wood Building Product Surface Coating Operations						
Doors and Windows	Carbon adsorber	26.5 - 46	90 - 95	46	95	43.7
	Catalytic oxidizer	83	85	83	85	70.6
Flooring	Thermal oxidizer	100	95	100	95	95
Interior Wall Paneling and Tileboard	Thermal oxidizer	75 - 89.2	94.1 - 99.6	89.2	99.6	88.8

a These data are from the 1998 ICR of the wood building product industry conducted by the EPA. Only three of the surveyed facilities identified control devices for the removal of HAP/VOC. Many facilities identified control devices for the removal of particulate matter (PM); however, these control devices will not be considered in the development of the MACT floor.
b "CE" means capture efficiency.
c "DE" means destruction efficiency (or control efficiency in the case of the carbon adsorbers).
d "OCE" means overall control efficiency (CE x DE).

3.3 ADD-ON CONTROL DEVICES

Add-on control devices in the wood building products surface coating industry are addressed within two categories: combustion control devices and recovery devices. Combustion control devices are defined as those devices used to destroy the contaminants, converting them primarily to carbon dioxide (CO_2) and water. The combustion control devices evaluated within this section include thermal incineration with recuperative and regenerative heat recovery and catalytic incineration.

Recovery devices are used to collect organic HAP prior to their final disposition, which may include reuse, destruction, or disposal. One recovery device that is addressed in this section is carbon adsorption in conjunction with regeneration of the carbon bed by steam or hot air. Another system discussed is a proprietary system that uses oxidant-ozone counterflow wet scrubbing and granular-activated carbon adsorption with cold oxidation regeneration. Also within the recovery devices section, information regarding carbon adsorption with final destruction of organic HAP by incineration is provided.

3.3.1 Combustion Control Devices

Combustion is a rapid, high-temperature, gas-phase reaction in which organic HAP are oxidized to CO_2, water, sulfur oxides (SO_x), and nitrogen oxides (NO_x). If combustion is not complete, partial oxidation products, which may be as undesirable as the initial organic HAP, could be released. In order to avoid such occurrences, excess air is added to ensure complete combustion. More complete process descriptions are provided below for each type of combustion control device.[15]

3.3.1.1 Thermal Incineration

Thermal incineration is a process by which waste gas is brought to adequate temperature, and held at that temperature for a sufficient residence time for the organic compounds in the waste gas to oxidize.[16] Through this technology, the constituents of the waste streams generated by surface coating operations will be converted to CO_2 and water in the presence of heat and sufficient oxygen.

A schematic diagram of a typical thermal incineration unit is provided in Figure 3-1. Primary components of the thermal incineration unit include a fan, a heat-recovery device, the combustion chamber, and the exhaust stack. The heat-recovery device is used to preheat the incoming waste stream so that less auxiliary fuel is required in the combustion chamber. This type of heat recovery is known as primary heat recovery and can generally be described as either recuperative or regenerative. If the exhaust stream is of sufficient temperature and/or heating value so that little or no auxiliary fuel is needed, heat recovery may not be cost effective and thus may not be implemented. However, when auxiliary fuel is required, heat recovery can be used to minimize energy costs.

In order for the thermal incinerator to achieve the desired destruction efficiency, certain key parameters must be controlled. These parameters include the combustion airflow rate, the waste stream flow rate, auxiliary fuel requirements, residence time, combustion chamber operating temperature, and the degree of turbulence between the air and combustible materials. Residence time is the time required for the initiation and completion of the oxidation reactions. Operating

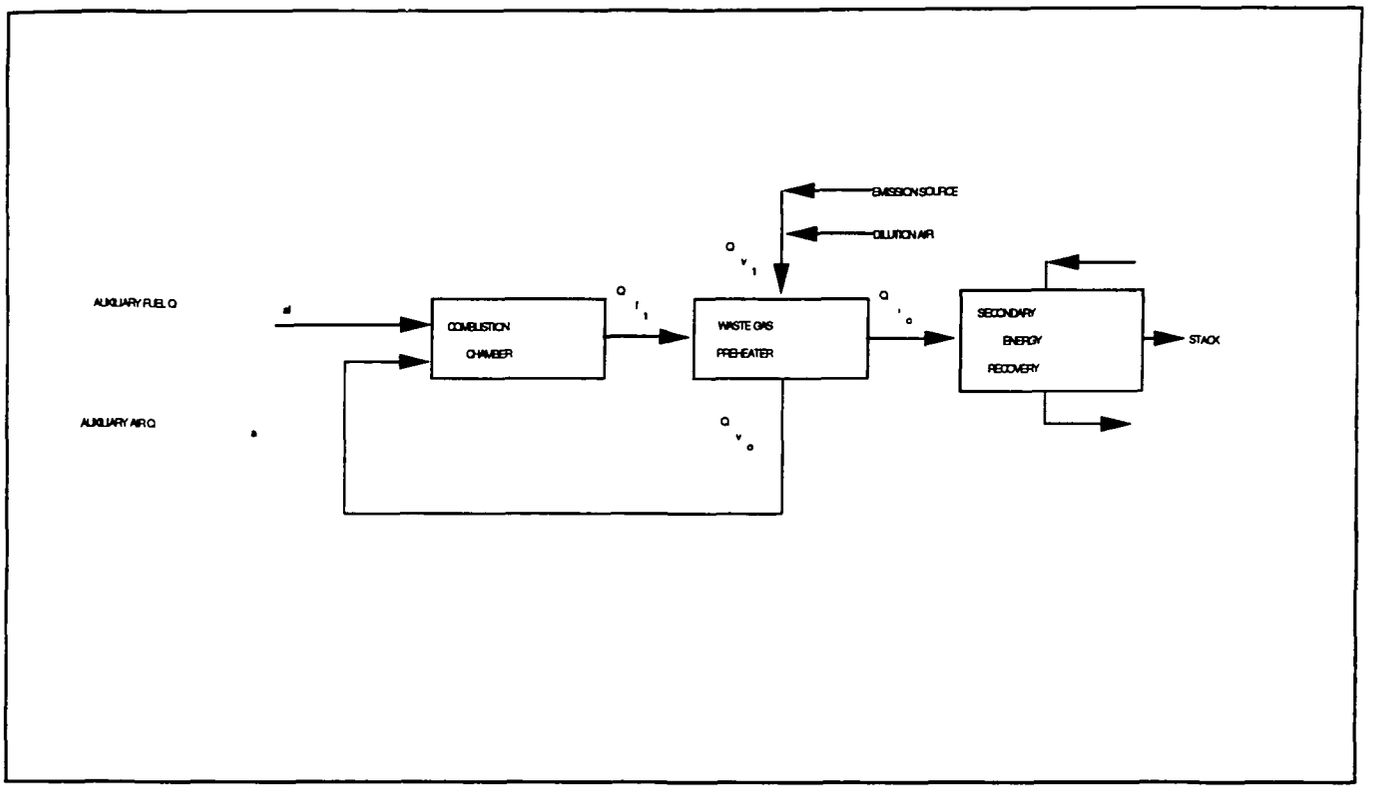

Figure 3-1. Thermal Incinerator--General Case.

temperature is a function of the residence time, the oxygen concentration, the type and concentration of the contaminant involved, the type and amount of auxiliary fuel, and the degree of mixing.

The destruction efficiency for a particular contaminant is a function of the operating temperature and residence time at that temperature. A temperature above 1500°F (816°C) will destroy most organic vapors and aerosols. Turbulence, or the mechanically induced mixing of oxygen and combustible material, can be increased by the use of refractory baffles and orifices to force adequate mixing in the combustion chamber. Alternatively, mixing can be enhanced by the use of over-fire air, the injection of air into the combustion zone at a high velocity, or by a forced air draft.[18]

Standard Operating Conditions for Thermal Incinerators. Thermal incinerators generally operate at a temperature ranging between 1200° and 1600°F (650° and 870°C) and require a minimum residence time of 0.3 seconds (sec) in the combustion zone.[19] Most thermal

units are designed to provide the waste gas a residence time of no more than 1 second in the combustion chambers.[20] Thermal incinerators can be designed to control flow rates in excess of 100,000 cubic feet per minute (ft^3/min) (2,832 cubic meters per minute [m^3/min]). Thermal incineration can control waste streams of organic HAP and VOC concentration from parts per million (ppm) to 25 percent of the lower explosive limit (LEL). The organic HAP and VOC concentrations typically cannot exceed 25 percent LEL for safety and insurance reasons.

Heat Recovery in Thermal Incinerators. Heat recovery reduces the incinerator's or other process' energy consumption. Primary heat recovery means preheating the incoming waste stream to the incinerator by transferring heat from the incinerator exhaust so the combustion chamber requires less auxiliary fuel. Secondary heat recovery means exchanging heat in the exhaust and leaving the primary device for heat recovery to some other medium used in plant processes.

Recuperative or regenerative devices can be used for primary heat recovery. The waste gas preheater shown in Figure 3-1 could be a recuperative heat exchanger. As shown in this figure, a heat exchanger transfers heat to the incoming waste stream from the incinerator exhaust stream. In a recuperative heat exchanger, the incinerator's effluent continuously heats the incoming stream in a steady-state process. Choosing a type of heat exchanger depends on the waste gas flow rate, the desired heat exchange efficiency, the temperature of the incinerator exhaust stream (used for preheat), and economics. Recuperative heat exchangers can recover 70 percent of the energy in the incinerator exhaust gas, thereby reducing fuel, the primary operating cost, by 70 percent.[21]

An incinerator employing regenerative heat recovery is presented in Figure 3-2. Figure 3-2 illustrates a two-chamber design in which process exhaust air is purified in a conventional combustion chamber but uses two beds of ceramic material to recover thermal energy. The process exhaust passes through a bed of ceramic heat sink material that was left hot at the end of a preceding cycle. As the air passes over the ceramic, it extracts heat from the bed. This leaves the ceramic bed cool at the end of the cycle and raises the air temperature to near the desired

thermal destruction temperature (combustion chamber temperature). Firing natural gas, propane, or fuel oil into the combustion chamber adds heat to reach the destruction temperature. The airstream leaving the combustion chamber passes through the other ceramic bed, which was left cool during the preceding cycle. The ceramic bed absorbs the heat from the airstream, leaving the ceramic bed hot at the end of this cycle and the exit airstream relatively cool.

The inlet and discharge airstreams are reversed, so that the ceramic beds absorb and reject heat from the airstream on a cyclical basis. When the cycle reverses and the ceramic bed at the inlet becomes the bed at the outlet, some contaminated air is left in the ceramic bed chamber. The volume of contaminated air in the inlet heat sink chamber must be displaced into the combustion chamber before extracting the high-temperature combustion air through it to attain the maximum overall destruction efficiency from a regenerative thermal incinerator. A system designed to "purge" the chamber is provided in a three-chamber design. In this system the same type of absorption/rejection of heat occurs, but the third chamber allows time between inlet and discharge cycles to purge each chamber at the end of an inlet cycle. Regenerative heat recovery systems can recover 95 percent of the energy in the incinerator exhaust gas, with a comparable reduction in fuel, the major operating cost.[21]

Thermal Incinerator Efficiency. Studies indicate that a well designed and operated commercial incinerator can achieve at least a 98 percent destruction efficiency (or an outlet concentration of 20 ppm) of nonhalogenated organics. This destruction efficiency corresponds to incinerators that are operated at 1600°F (871°C) with a nominal residence time of 0.75 sec.[22]

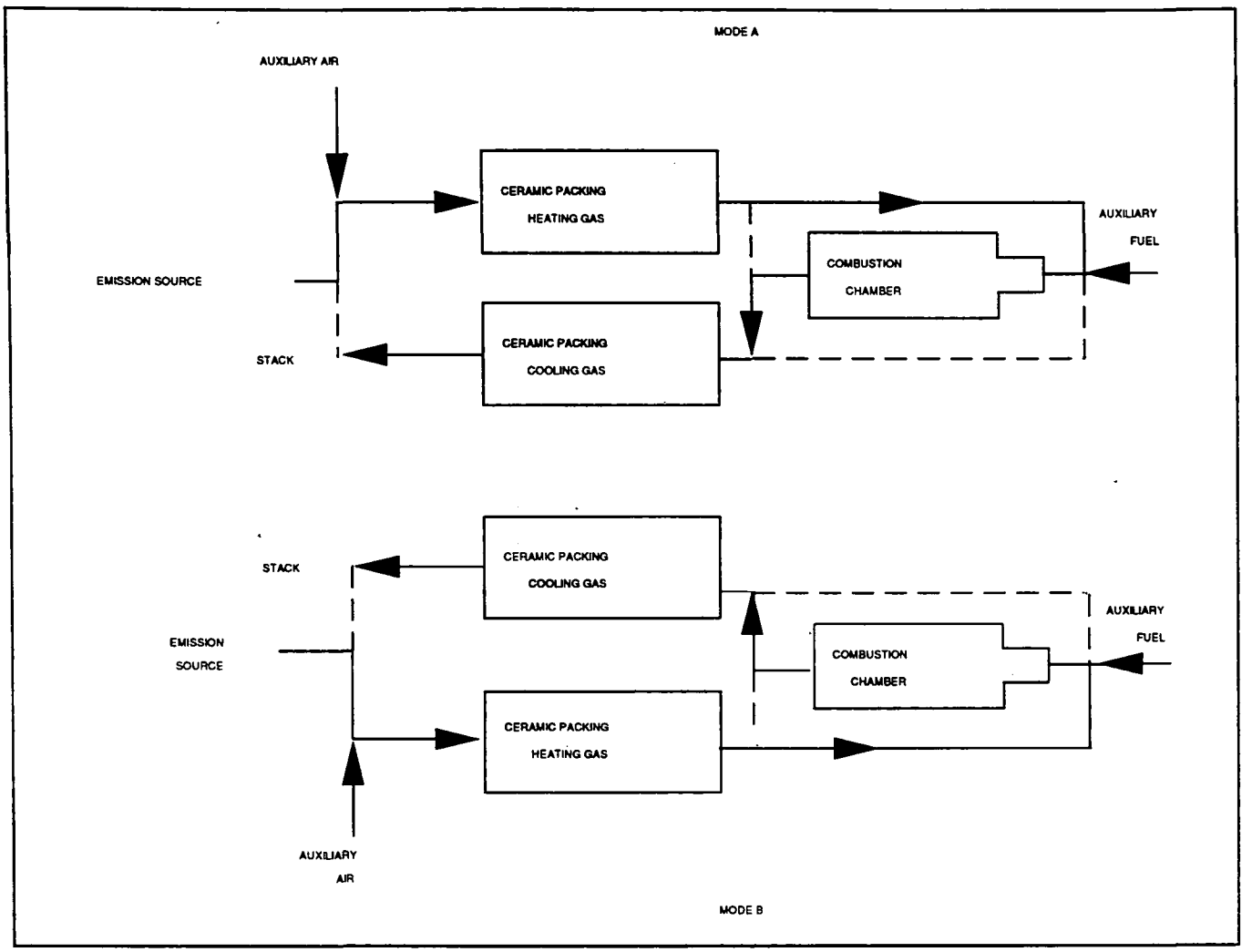

Figure 3-2. Regenerable-Type Thermal Incinerator.

3.3.1.2 Catalytic Incineration

Catalytic incineration is comparable to thermal incineration in that organic HAP are heated to a temperature sufficient for oxidation to occur. The temperature required for oxidation with catalytic incineration, 300° and 900°F (149° and 482°C), is considerably lower than that required for thermal incineration, 1200° and 1600°F (650° and 870°C), because a catalyst is used to promote oxidation of contaminants.[23] The catalyst is imposed on a large surface containing many active sites on which the catalytic reaction occurs. Platinum is the most widely used catalyst; palladium is also commonly used.[24] Because the metals used as catalysts are expensive, only a thin film is applied to the supporting substrate. Ceramic materials are commonly used as the supporting substrate.

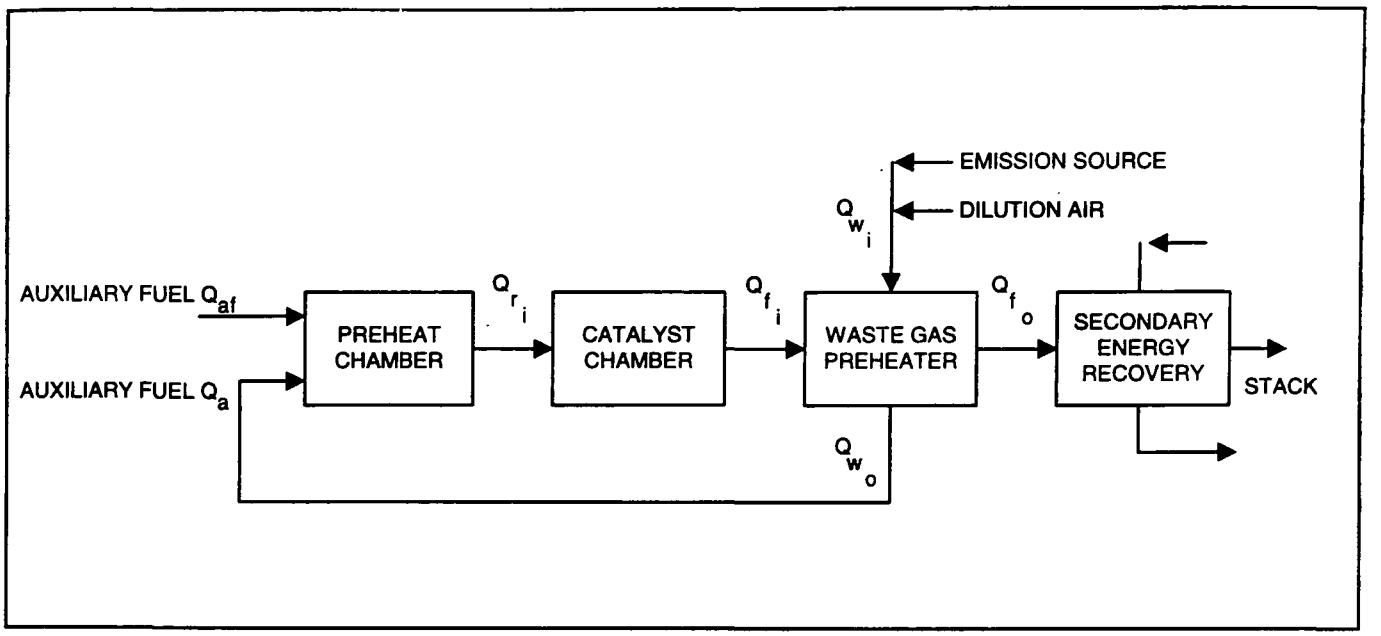

Figure 3-3. Schematic of a Typical Catalytic Incineration System.

Figure 3-3 is a schematic of a typical catalytic incineration system. As indicated in this figure, components of the system include a fan, a preheat chamber, a catalyst chamber, a waste gas preheater (recuperative heat-recovery device), secondary heat recovery, and a stack. The preheat chamber is used to heat the incoming waste stream to the required oxidation temperature, usually between 300° and 900°F (149° and 482°C) for catalytic incineration.[25] The mixing chamber is used to thoroughly mix the hot combustion products from the preheat chamber with the exhaust waste stream. This ensures that the stream sent to the catalyst bed is of uniform temperature. Combustion of the VOC in the waste gas then takes place at the catalyst bed. The catalyst bed may be a fixed bed or a fluidized bed consisting of individual pellets enclosed in a screened unit. A heat recovery device is used if supplemental fuel requirements are expected to be high. Many parameters affect the performance of a catalytic incineration system. The primary factors include operating temperature, space velocity (inverse of residence time), VOC concentration and species, and catalyst type and susceptibility to contaminants. The optimum operating temperature depends on the type of catalyst, as well as the concentration and type of organic HAP. Space velocity is defined as the volume of gas entering the catalyst bed divided by the volume of the catalyst bed. In general, as space velocity increases, destruction efficiency decreases.[25] One factor that increases the space velocity is increased temperature. The amount and type of organic HAP

determine the heating value of the waste stream and thus the amount of supplemental fuel required to maintain the desired operating temperature.

The type of catalyst that is used is determined by the particular organic HAP in the waste stream. Particulates and catalyst poisons in the waste stream can affect the efficiency of the catalyst and its lifetime. Some materials that are considered catalyst poisons include heavy metals (mercury, lead, iron, etc.), silicon, sulfur, halogens, organic solids, and inert particulates.[25] Particulates and poisons reduce the activity of the catalyst site, minimizing sites available for the oxidation reaction. These materials can also mask, plug, or coat the catalyst surface, thereby eliminating available catalyst sites.

Standard Operating Conditions for Catalytic Incineration. The catalyst bed in catalytic incinerators generally operates at temperatures ranging between 300° and 900°F (149° and 482°C), with temperatures rarely exceeding 1000°F (538°C). The contact time required between the contaminant and the catalyst so that complete oxidation occurs is normally 0.3 sec. The excess air requirements for catalytic incineration units are usually only 1 to 2 percent higher than the stoichiometric requirements.[23,26] Catalytic incinerators can be designed to control waste gas flow rates up to about 50,000 ft^3/min (1,416 m^3/min). The VOC content of the waste stream may be in the part-per-million range up to 25 percent of the lower explosive limit or LEL.

Catalytic Incinerator Efficiency. A well operated and maintained catalytic incineration unit can achieve destruction efficiencies of 98 percent, comparable to thermal incineration units. The destruction efficiency would decrease in the presence of the catalyst poisons and particulates described above.[27]

3.3.2 Recovery Devices

Organic HAP in a waste gas stream can be collected through adsorption of the contaminants onto a porous bed. The contaminants can then be recovered, if desired, by desorption of the bed with steam or hot air. Contaminants can be condensed and recovered or disposed of after desorption

or regeneration. Alternatively, contaminants can be sent to an incinerator for destruction after regeneration by hot air. The following section discusses the use of activated carbon adsorption systems followed by steam and hot air regeneration.

3.3.2.1 Carbon Adsorption

The carbon adsorption process used to control organic HAP emissions from waste gas streams can be subdivided into two sequential processes. The first process involves the adsorption cycle, in which the waste gas stream is passed over the adsorbent bed for contaminant removal. The second process involves regeneration of the adsorbent bed, in which contaminants are removed using a small volume of steam or hot air, so that the carbon can be reused for contaminant removal.

Adsorption is the capture and retention of a contaminant (adsorbate) from the gas phase by an adsorbing solid (adsorbent). The four types of adsorbents most typically used are activated carbon, aluminum oxides, silica gels, and molecular sieves. Activated carbon is the most widely used adsorbent for air pollution control following wood building products surface coating operations and is the only type of adsorbent discussed in this section.[28] Both the internal and external surfaces of the carbon are used as adsorption sites. Diffusion mechanisms control the transfer of the adsorbate from the gas phase to the external surface of the carbon, from the external surface of the carbon to internal pores, and finally to an active site in the pores. Adsorption depends on a mass transfer gradient from the gas phase to the surface. Some method of heat removal from the carbon may be necessary because adsorption is an exothermic process, depending on the amount of contaminant being removed from the gas phase.[29]

The two main mechanisms of adsorption are physical adsorption and chemisorption. Physical adsorption (otherwise known as van der Waals adsorption) uses a weak bonding of the adsorbate molecules to the adsorbent. The van der Waals forces within the bond are similar to the forces that attract molecules in a liquid and are easily overcome by the application of heat or the reduction of pressure. Therefore, regeneration (cleaning) of the adsorbent is possible.

Chemisorption uses chemical bonding by inducing a reaction between the adsorbate and the adsorbent. Recovery of a chemically adsorbed adsorbate is not always possible.[30]

Regeneration is the process of desorbing (that is, reversing the process and separating the contaminants from the carbon). Regeneration of the carbon bed is usually initiated prior to "breakthrough." Breakthrough, as the name implies, is that point in the adsorption cycle at which the carbon bed approaches saturation and the concentration of organics in the effluent stream begins to increase dramatically. In other words, the contaminant is no longer adsorbed by the carbon and, therefore, passes through the process and is emitted into the atmosphere. If the carbon bed is not regenerated, the concentration of organic HAP in the effluent stream will continue to increase until it is equal to that of the influent stream or inlet, i.e., the carbon is saturated.[31]

Regeneration can be accomplished by reversing the conditions that are favorable to adsorption, by increasing the temperature and/or reducing the system pressure. The ease of regeneration depends on the magnitude of the forces holding the VOCs to the surface of the carbon. The most common method of regeneration is steam stripping. Low-pressure, superheated steam is introduced into the carbon. The steam releases heat as it cools; this heat is then available for adsorbate vaporization. Consequently, the organic HAP become separated from the carbon and airborne. Another regeneration method is the use of hot, inert gas or hot air. With either steam or hot air regeneration, the desorbing agent flows through the bed in the direction opposite to the waste stream. This desorption scheme allows the exit end of the carbon to remain contaminant-free.[32]

In a regeneration process, some adsorbate, known as the "heel," may remain in the carbon after regeneration. The actual capacity of the carbon is referred to as the working capacity and is equal to the total capacity of the carbon less the capacity taken by the heel.[31] As heels accumulate or increase in the carbon, the capture efficiency of carbon adsorption units tends to reduce, resulting in eventually doing a change-out (replacing the activated carbon with virgin or new carbon).

Adsorption units that are commonly used to remove contaminants from waste gas streams include the following:

- Fixed or rotating regenerable carbon beds;
- Disposable/rechargeable carbon canisters;
- Traveling bed carbon adsorbers;
- Fluid bed carbon adsorbers; and
- Chromatographic baghouses.

Of the five adsorption systems listed above, the first two are most commonly used for air pollution control. The disposable/rechargeable canisters are used for controlling low flow rates (less than 100 ft^3/min [3 m^3/min]) and could potentially be used to control the low-volume flow rates typical of the wood building products surface coating operations. Only the fixed-bed, regenerable carbon adsorption system is discussed in this chapter.[33]

A fixed-bed, regenerable carbon adsorption system is presented in Figure 3-4. The components of the carbon adsorption system include the following:

- A fan (to convey the waste gas into the carbon beds);
- At least two fixed-bed carbon adsorption vessels;
- A stack for the treated waste gas outlet;
- A steam valve for introducing desorbing steam;
- A condenser for the steam/contaminant desorbed stream; and
- A decanter for separating the HAP condensate and water.

In the system depicted in Figure 3-4, one carbon vessel is being used for adsorption while the other is being regenerated. Both vessels will alternate in the adsorption and regeneration modes. The steam is used to regenerate a vessel and is then sent to a condenser. The condensate is a water and organic HAP mixture. The decanter can be used to separate the condensate into a water stream and a condensate stream. The resulting water may be treated or discharged to the

sewer depending on its measured toxicity. The condensed organics can be recycled (if usable), used as a fuel, or disposed of.

Hot air or a hot inert gas could be employed in lieu of using steam for regeneration. After regeneration, the desorbing stream would then consist of an air or gas stream with a high organic HAP concentration. This air or gas stream could then be sent to an incinerator for final destruction of organic HAP.

Factors That Affect Adsorption Efficiency. Several factors affect the amount of material that can be adsorbed onto the carbon bed. These factors include type and concentration of contaminants in the waste gas, system temperature, system pressure, humidity of waste gas, residence time, and heel buildup.[31]

The type and concentration of contaminants in the waste stream determine the adsorption capacity of the carbon. Adsorption capacity is defined as the pounds of material adsorbed per pound of carbon. In general, adsorption capacity increases with a compound's molecular weight or boiling point, provided all other parameters remain constant. There is also a relationship between concentration and the carbon adsorption capacity. As concentration decreases, carbon capacity also decreases. However, the capacity does not decrease proportionately with the concentration decrease. Therefore, carbon capacity still exists at very low pollutant concentration levels.[31]

Increases in operating temperature decrease adsorption efficiency. At higher temperatures, the vapor pressure of the contaminants increases, reversing the mass transfer gradient. Contaminants would then be more likely to return to the gas phase than to stay on the carbon. At lower temperatures, the vapor pressures are lower, so the carbon will likely retain the contaminants.[33]

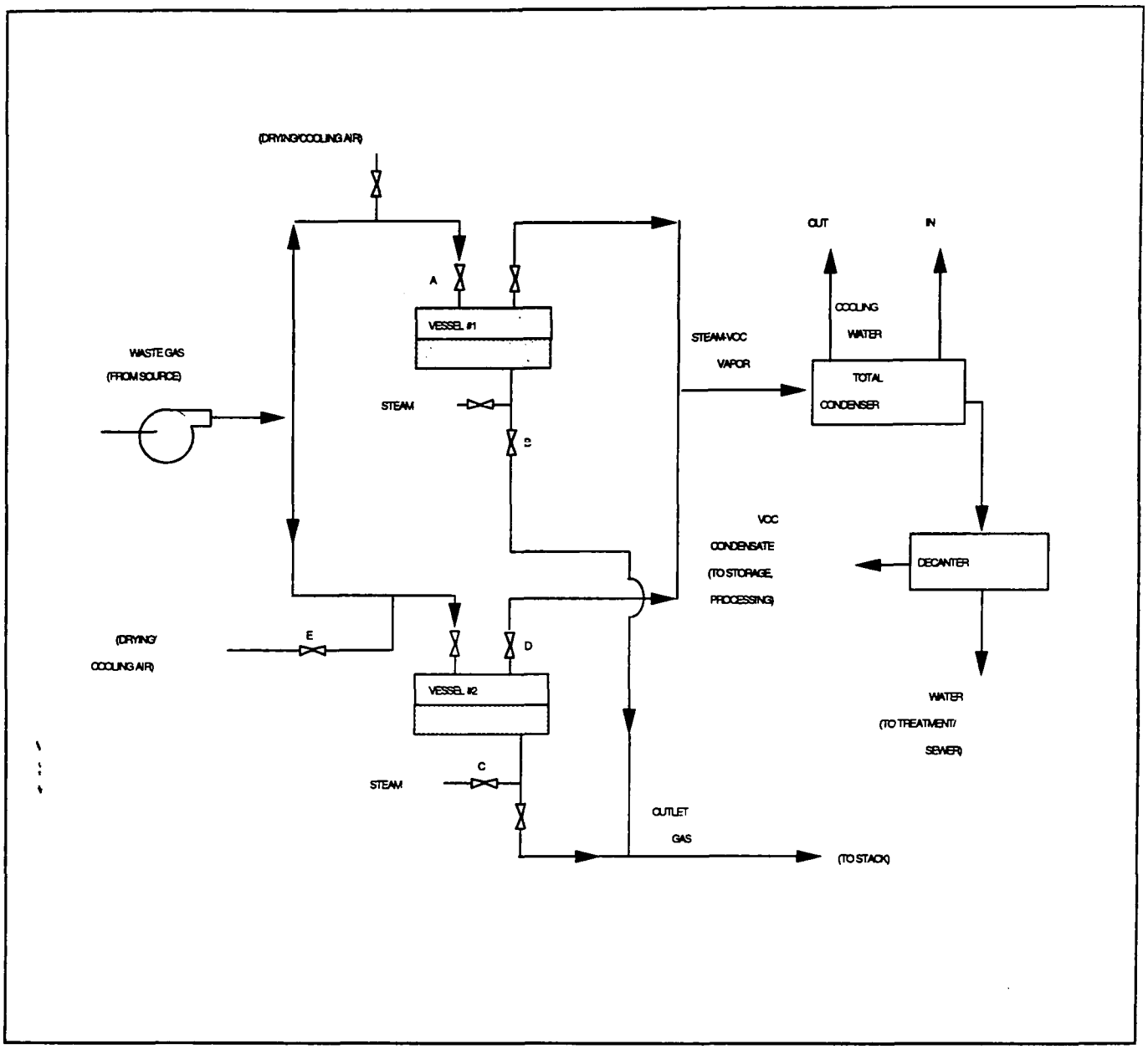

Figure 3-4. Typical Carbon Adsorber Operating Continuously with Two Fixed Beds.

The system pressure also improves adsorption's effectiveness. Increases in the gas phase pressure promote more effective and rapid mass transfer of the contaminants from the gas phase to the carbon. Therefore, the probability that the contaminants will be captured is increased.[34]

The relative humidity or moisture content of the gas phase reduces the adsorption efficiency. Although water vapor is not preferentially adsorbed over the contaminants, the presence of water vapor in the gas phase has been demonstrated to have a negative effect on the adsorption capacity of the carbon. However, the effect of humidity or moisture in the gas phase is insignificant for

VOC concentrations greater than 1,000 ppm and during the initial startup of the adsorption cycle (the carbon is drier). Indeed, some moisture content in the gas phase can be beneficial. For instance, when high concentrations of contaminants with high heats of adsorption are present, the temperature of the carbon bed may rise considerably during adsorption due to the exothermic nature of the process. The presence of water may minimize the temperature rise.[31]

Adsorption efficiency varies slightly if contaminants don't have enough contact (residence) time with the active sites of the carbon, which allows mass transfer to occur. Contaminants especially need this time if many molecules (high-concentration streams) are competing for the same sites. Residence time of the contaminants with the active sites can be increased by using larger carbon beds, but then the pressure drop across the system increases, resulting in increased operating costs.[34]

Standard Operating Conditions of Carbon Adsorbers. Fixed-bed carbon adsorption units have been sized to handle flow rates ranging from several hundred to several hundred thousand ft^3/min. There is no obvious practical limit to flowrate because multibed systems operate with multiple beds in simultaneous adsorption cycles. The organic HAP concentrations of the waste streams controlled by carbon adsorption units can range from the part-per-billion level to as high as 20 percent of the LEL. Adsorption systems typically operate at ambient pressure and temperatures ranging between 77° and 104°F (25° and 40°C).[33]

Carbon Adsorption Efficiency. Carbon adsorption recovery efficiencies of 95 percent and greater have been demonstrated to be achievable in well designed and well operated units.[35-37] The performance of the carbon adsorption unit is negatively affected by elevated temperature, low pressure, high humidity, as previously discussed.

3.4 REFERENCES

1. Roobol, N.R. Industrial Painting: Principles and Practices. Carol Stream, IL, Hitchcock Publishing Co. 1991. pp. 79-88.

2. Ballaway, B. New Developments in Waterborne Finishes. Industrial Finishing. December 1989. pp. 24-25.

3. Detrick, G. F. and K. Kronberger. Addressing the VOC Issue in Industrial Finishes. American Paint and Finishes Journal. September 11, 1989. pp. 42-52.

4. Ref. 1, pp. 226 - 227.

5. Del Donno, T. A. Waterborne Finishes Outlook Bright. Industrial Finishing. December 1988. pp. 28-33.

6. Contact Report. Caldwell, M. J., and Christie, S., Midwest Research Institute, with Tucker, R., Guardsman Products, Inc. March 28, 1991. Lower-VOC finishes.

7. Threatt, B., MRI, to Lluberas, L., EPA/CCPG. November 10, 2000. Documentation of Data Base Containing Information from Section 114 Responses and Site Visits for the Wood Building Products (Surface Coating) NESHAP.

8. Costanza, J.R., A.P. Silveri, and J.A. Vona. Radiation Cured Coatings. Federation Series on Coatings Technology. Philadelphia, PA. June 1986. pp. 7-15.

9. Chemcraft Sadolin International, Inc. Wood Finishes. Brochure. Walkertown, NC.

10. Cohen, Gary. Radtech International North America. UV/EB for Beginners From a Beginner. Coating '99 Conference Proceedings. Dallas, TX. September 21-23, 1999. Pp. 699 - 704.

11. Midwest Research Institute. September 1998. Preliminary Industry Characterization: Wood Building Products Surface Coating.

12. Loewenstein Dip Continues. Industrial Finishing. May 1993. 69:14-15.

13. Rechel, C. J., RadTech International, to Edwardson, J. A. and J. Berry, EPA/ESB. October 13, 1993. Potential for reduction of emissions by the use of UV curable finishing systems.

14. Ref. 1, pp. 229 - 231.

15. Bethea, R. M. Air Pollution Control Technology. New York, Van Nostrand Reinhold Company. 1978. p. 395.

16. Brunner, C. R. Hazardous Air Emissions from Incineration. New York, Chapman and Hall. 1985. p. 92.

17. Cooper, C. D. and F. C. Alley. Air Pollution Control: A Design Approach. Prospect Heights, IL, Waveland Press Inc. 1994. p. 339.

18. Ref. 14, pp. 401-402.

19. Ref. 14, p. 405.

20. Prudent Practices for Disposal of Chemicals from Laboratories. National Academy Press. Washington, D.C. 1983.

21. Seiwert, J.J. Regenerative Thermal Oxidation for VOC Control. Smith Engineering Company. Duarte, CA. Presented at Wood Finishing Seminar--Improving Quality and Meeting Compliance Regulations. Sponsored by Key Wood and Wood Products and Michigan State University. Grand Rapids. March 5, 1991. 27 pp.

22. Farmer, J. R., EPA, to Distribution. Thermal Incinerator Performance for NSPS. August 22, 1980. 29 pp.

23. Radian Corporation. Catalytic Incineration for Control of VOC Emissions. Park Ridge, NJ, Noyes Publications. 1985. pp. 4-5.

24. Ref. 14, p. 421.

25. Ref. 21, pp. 12-24.

26. Ref. 14, p. 425.

27. Telecon. Caldwell, M. J., Midwest Research Institute, with Minor, J., M & W Industries. June 20, 1991. Catalytic incineration.

28. Ref. 14, pp. 375-376.

29. Ref. 14, p. 366.

30. Ref. 16, p. 381.

31. Calgon Corporation. Introduction to Vapor Phase Adsorption Using Granular Activated Carbon. pp. 11-1 through 11-16.

32. Ref. 14, pp. 382-387.

33. Ref. 19, pp. 4-1 through 4-44.

34. Ref. 14, pp. 380-382.

35. Crane, G. Carbon Adsorption for VOC Control. U. S. Environmental Protection Agency. Research Triangle Park, NC. January 1982. p. 23.

36. Kenson, R.E. Operating Results from KPR Systems for VOC Emission Control in Paint Spray Booths. Met-Pro Corporation. Harleysville, PA. Presented at the CCA Surface Finish '88 Seminar and Exhibition. Grand Rapids, MI. May 18, 1988. 10 pp.

37. VIC Manufacturing. Carbon Adsorption/Emission Control. Minneapolis, MN.

Chapter 4
Model Plants and Control Options

4.0 INTRODUCTION

This chapter describes model plants and control options for the five subcategories of the wood building products surface coating industry as identified in Chapter 2, Wood Building Products – Surface Coating Source Category. The project database contains information on 47 wood building products surface coating operations, including 44 "major" sources and three synthetic "minor" sources (based on Title V classification provided in the ICR responses). It is estimated that the major source facilities in the project database represent approximately 20 percent of the wood building products surface coating industry in the United States.[1] The model plants described are based on the collected data from the industry and are used to represent facilities that are major sources of HAP emissions. A major source is defined as any wood building product surface coating facility with the potential to emit 10 tons per year (tons/yr) [9.1 megagrams per year (Mg/yr)], of any individual HAP or 25 tons/yr (22.7 Mg/yr) of all HAP combined. The model plant information will then be used to estimate nationwide emissions from all major source wood building product surface coating facilities in Chapter 5 (Summary of Environmental and Energy Impacts).

Model plants are typically created by averaging multiple parameters from existing facilities in order to evaluate the general effects of various control options on the source category. The purpose of model plants in the wood building product surface coating industry is to represent potentially affected facilities that are not included in the project database. The associated costs and impacts were developed for each individual facility in the database and then averaged to

determine the various model plants. Then the costs and impacts were scaled to represent the entire industry of approximately 205 major source facilities. Evaluating control options for the wood building products surface coating industry using individual facilities makes sense because the control options vary widely across the industry and across subcategories. Control options were selected based on the application of presently available low- or no-HAP coatings.

4.1 MODEL PLANTS

The model plants are based on the following: industry and facility data contained in the wood building products surface coating project database, site visits to wood building product surface coating operations, and the industry members' feedback provided during several stakeholder meetings held throughout the development of the NESHAP. The model plants were defined based on the following parameters: (1) product types, (2) product performance requirements, and (3) coating limitations. Model plants have been specified for the following five subcategories in the wood building products surface coating industry:

- Doors and windows;
- Flooring;
- Interior wall paneling and tileboard;
- Other interior panels; and
- Exterior siding, doorskins, and miscellaneous.

Chapter 2 describes the basis for the five wood building products surface coating subcategories in more detail. Table 4-1 summarizes the five model plants with the number of facilities in each model plant, the total amounts of coatings and solids used by those facilities, and the associated organic HAP emissions, both before and after existing add-on controls. Table 4-1 also presents averages of the data for each model plant.

Table 4-1. Summary of Wood Building Product Surface Coating Model Plants

Model plant type	Doors and windows[a]	Flooring	Interior wall paneling and tileboard	Other interior panels	Exterior siding, doorskins, and miscellaneous
Number of facilities (in database)	11	5	6	13	12
Total coating usage (gals of coating/yr)	951,583	72,611	1,177,962	1,231,394	5,242,869
Total coating solids (gals soiids/yr)	196,400	49,060	483,755	451,065	2,219,176
Total HAP emissions (lb/yr) before control	1,239,698	110,602	2,124,995	288,617	310,549
Total HAP Emissions (lb/yr) after control	1,147,639	71,185	1,260,685	288,617	310,549
Avg HAP emissions (lb/yr) before control	112,700	22,120	354,166	22,201	25,879
Avg HAP emissions (lb/yr) after control	104,331	14,237	210,114	22,201	25,879
Overall control (%)	7.4	35.6	40.7	0.0	0.0

[a] Coatings data from 1 of the 11 window, door, and miscellaneous facilities is considered CBI. Therefore, "Total coating usage," "Average coating usage," "Total coating solids," and "Average coating solids" are all based on 10 facilities. Emissions information cannot be considered CBI and, therefore, is based on 11 facilities (9 major source facilities and two synthetic minor source facilities).

4.1.1 Model Plant 1 – Doors and Windows

Model Plant 1 is based on 11 door and window facilities (including 9 major sources and two synthetic minor sources) in the project database and represents an estimated total industry population of 50 facilities in the U. S. that are major sources of organic HAP emissions.[1] Coating usage ranges from approximately 100 to 460,000 gal/yr (380 to 1,700,000 L/yr). Both the organic HAP emissions before and after add-on controls from the 11 facilities in this subcategory range from 0 to 300 tons/yr (0 to 272 Mg/yr). The controlled organic HAP emissions from the 11 facilities represent approximately 37 percent of the estimated 1,500 ton/yr of organic HAP emitted from all of the facilities in the project database.

4.1.2 Model Plant 2 – Flooring

Model Plant 2 is based on five flooring facilities in the project database and represents an estimated total industry population of 50 facilities in the U. S. that are major sources of organic HAP emissions.[1] However, the MACT floor analysis for this subcategory is based on four facilities because one facility was found to be unrepresentative of the subcategory. Coating usage ranges from approximately 1,300 to 37,000 gal/yr (4,900 to 140,000 L/yr). The organic HAP emissions from the facilities before and after add-on controls in this subcategory range from 0 to 15 tons/yr (0 to 14 Mg/yr). The controlled organic HAP emissions from the five facilities account

for approximately 2 percent of the estimated 1,500 ton/yr of organic HAP emitted from all wood building products surface coating facilities in the project database.

4.1.3 Model Plant 3 – Interior Wall Paneling and Tileboard

Model Plant 3 is based on six interior wall paneling and tileboard facilities in the project database and represents an estimated total industry population of 15 facilities in the U. S. that are major sources of organic HAP emissions.[1] Coating usage ranges from approximately 30,000 to 320,000 gal/yr (112,000 to 1,200,000 L/yr). The organic HAP emissions from the facilities in this subcategory before and after add-on controls range from 3 to 286 ton/yr (2.7 to 259 Mg/yr). The total organic HAP emissions from the six facilities account for 41 percent of the estimated 1,500 ton/yr of organic HAP emitted from all wood building products surface coating facilities in the project database.

4.1.4 Model Plant 4 – Other Interior Panels

Model Plant 4 is based on 13 other interior panel facilities in the project database and represents an estimated total industry population of 25 facilities in the U. S. that are major sources of organic HAP emissions.[1] Coating usage ranges from approximately 1,100 to 1,300,000 gal/yr (4,200 to 4,900,000 L/yr). The organic HAP emissions from the 13 facilities in this subcategory range from 0 to 44 ton/yr (0 to 40 Mg/yr). The total organic HAP emissions from the 13 facilities in the project database account for 9 percent of the estimated 1,500 ton/yr of organic HAP emitted from all wood building products surface coating facilities in the project database. None of these facilities use add-on controls.

4.1.5 Model Plant 5 – Exterior Siding, Doorskins, and Miscellaneous

Model Plant 5 is based on 12 exterior siding, doorskin, and miscellaneous facilities (including 11 major sources and one synthetic minor source) in the project database and represents an estimated total industry population of 65 facilities in the U.S. that are major sources of organic HAP emissions.[1] Coating usage ranges from approximately 58,000 to almost 2,000,000 gallons per year (gal/yr) [220,000 to 7,600,000 liters/yr (L/yr)]. The organic HAP emissions from the 12

facilities in the exterior siding, doorskin, and miscellaneous subcategory range from 0 to 54 tons per year (ton/yr) [0 to 49 megagrams per year [Mg/yr]). The total organic HAP emissions from the 12 facilities represent 10 percent of the estimated 1,500 ton/yr of HAP emitted from all wood building products surface coating facilities in the project database. None of these facilities use add-on controls.

Operating parameters and specifications for all facilities in the project database are broken out by subcategory in Tables 4-2 through 4-6, including information on coating usage, solids usage, organic HAP emissions, and overall control efficiencies. The average organic HAP emission values specified for each model plant in Table 4-1 are overall averages of the total amount of organic HAP emitted by facilities in each subcategory in the project database. (i.e., totals from Tables 4-2 through 4-6 divided by the number of database facilities in each subcategory).

Table 4-2. Doors and Windows Subcategory

Blind facility ID	Coating usage[a] (gal of coating)	Solids usage[a] (gal of solids)	HAP emissions before add-on controls (lbs)	HAP emissions after add-on controls (lbs)	Overall control (%)
A-1	33,246	5,111	20,116	20,116	0.0
A-2	36,961	8,247	112,427	112,427	0.0
A-3[b]	12,820	5,490	53,014	53,014	0.0
A-4	459,207	79,224	216,374	124,316	42.5
A-5	CBI	CBI	597,555	597,555	0.0
A-6	29,151	17,713	34,098	34,098	0.0
A-7	4,738	2,471	3,311	3,311	0.0
A-8	259,055	59,906	190,561	190,561	0.0
A-9	86,600	6,116	6,331	6,331	0.0
A-10	100	42	128	128	0.0
A-11[b]	29,706	12,080	5,782	5,782	0.0
Totals	951,584	196,400	1,239,697	1,147,639	7.4

[a] Since one of the 11 facilities has associated CBI, the total coating usage and solvent usage are based on the 10 non-CBI facilities.
[b] Synthetic minor source; therefore, not subject to NESHAP requirements.

Table 4-3. Flooring Subcategory

Blind facility ID	Coating usage (gal of coating)	Solids usage (gal of solids)	HAP emissions before add-on controls (lbs)	HAP emissions after add-on controls (lbs)	Overall control (%)
B-1	7,946	5,344	0	0	0.0
B-2	37,416	26,219	30,612	30,612	0.0
B-3	19,273	13,087	45,519	5,102	88.8
B-4	6,628	3,785	15,662	15,662	0.0
B-5	1,348	625	19,808	19,808	0.0
Totals	72,611	49,060	111,602	71,185	36.2

Table 4-4. Interior Wall Paneling and Tileboard Subcategory

Blind facility ID	Coating usage (gal of coating)	Solids usage (gal of solids)	HAP emissions before add-on controls (lbs)	HAP emissions after add-on controls (lbs)	Overall control (%)
C-1	320,440	139,841	1,077,960	213,651	80.2
C-2	154,127	52,812	572,756	572,756	0.0
C-3	298,173	129,473	5,325	5,325	0.0
C-4	249,463	88,837	49,838	49,838	0.0
C-5	125,246	57,681	288,012	288,012	0.0
C-6	30,513	15,111	131,104	131,104	0.0
Totals	1,177,962	483,755	2,124,995	1,260,686	40.7

Table 4-5. Other Interior Panels Subcategory

Blind facility ID	Coating usage (gal of coating)	Solids usage (gal of solids)	HAP emissions before add-on controls (lbs)	HAP emissions after add-on controls (lbs)	Overall control (%)
D-1	13,570	5,844	4,945	4,945	0.0
D-2	70,832	24,233	88,277	88,277	0.0
D-3	93,101	61,516	80,434	80,434	0.0
D-4	7,776	2,300	0	0	0.0
D-5	302,758	77,269	54	54	0.0
D-6	555,524	193,434	1,086	1,086	0.0
D-7	12,028	5,037	960	960	0.0
D-8	21,243	6,622	14,267	14,267	0.0
D-9	74,606	19,861	3,337	3,337	0.0
D-10	1,103	870	1,195	1,195	0.0
D-11	33,413	30,668	70,804	70,804	0.0
D-12	27,285	12,786	1,201	1,201	0.0
D-13	18,155	10,626	22,059	22,059	0.0
Totals	1,231,394	451,066	288,619	288,619	0.0

Table 4-6. Exterior Siding, Doorskins, and Miscellaneous Subcategory

Blind facility ID	Coating usage (gal of coating)	Solids usage (gal of solids)	HAP emissions before add-on controls (lbs)	HAP emissions after add-on controls (lbs)	Overall control (%)
E-1	468,792	202,197	12,180	12,180	0.0
E-2[a]	146,145	61,016	14,303	14,303	0.0
E-3	219,551	87,602	5,725	5,725	0.0
E-4	238,249	113,867	10,952	10,952	0.0
E-5	237,238	97,173	6,187	6,187	0.0
E-6	188,132	81,144	2,526	2,526	0.0
E-7	1,992,450	789,997	107,609	107,609	0.0
E-8	938,766	390,002	40,599	40,599	0.0
E-9	454,600	200,634	102,724	102,724	0.0
E-10	93,311	30,419	0	0	0.0
E-11	207,094	135,854	1,951	1,951	0.0
E-12	58,541	29,271	5,794	5,794	0.0
Totals	5,149,558	2,188,757	310,550	310,550	0.0

[a] Synthetic minor source; therefore, not subject to NESHAP requirements.

4.2 MODEL PLANT PARAMETERS

The coating information from the ICR was analyzed to profile the coating usage, by type, for each of the model plants in the analysis. Table 4-7 presents the coating usage profiles for each model plant. As can be seen in the coating usage profiles for each model plant, there are distinguishable differences between the subcategories.

Door and window facilities use a wide variety of waterborne and solventborne coatings. Solventborne wood treatment/preservatives make up over half of the coatings used by this subcategory. A few facilities have been able to switch to UV topcoats and sealers.

All of the flooring facilities in the database reported using a combination of UV topcoats and sealers with a stain. One facility uses a non-HAP solventborne stain, but the rest of the facilities still use solventborne stains containing HAP.

Interior wall paneling and tileboard facilities use mainly basecoats and topcoats that can be either waterborne or solventborne. Most facilities are switching to waterborne coatings as recent technology advancements have improved the coating performance of waterborne coatings. Coating performance is a high priority for this subcategory for both decorative requirements for interior wall paneling and moisture resistant requirements of tileboard.[3]

Other interior panel facilities use a larger variety of mostly waterborne and UV coatings. Several of these facilities produce laminated particleboard using waterborne adhesives in the process.

Exterior siding, doorskin, and miscellaneous facilities primarily use waterborne primers. Siding is typically finished in the field, however, a few facilities prefinish siding before it leaves the facility.

Table 4-7. Model Plant Coating and Solvent Use Profile

	Model plants				
	1	2	3	4	5
Coating type	Percent of total gallons (%)				
Adhesive	0	0	12	22	0
Basecoat	8	0	39	9 (UV)	11
Clearcoat	0	0	2	3	0
Paint/ink	0	0	3	6	0
Primer	10	0	10	23	82
Sealer	4 (UV)	39 (UV)	9	20 (UV)	3
Stain	2	35	2	0	1
Topcoat	18 (UV)	26 (UV)	23 (UV)	17 (UV)	3
Wood Treatment/Preservative	57	0	0	0	0
Total	100	100	100	100	100

4.3 MAXIMUM ACHIEVABLE CONTROL TECHNOLOGY FLOORS[2]

The wood building products surface coating industry is basically uncontrolled in terms of organic HAP. Only three facilities in the project database use some form of add-on control device to reduce emissions of organic HAP. One of the three facilities using add-on controls has switched some of its solventborne coatings and inks to low- or no-HAP waterborne coatings since the ICR response was received and no longer uses all of their add-on control devices.[3] The trend in the wood building products surface coating industry is reformulation of coatings to low- or no-HAP coatings, which is already being done at many facilities and is the best control option to reduce organic HAP in the industry. Add-on controls (i.e., oxidizers and adsorbers) for coating application lines and drying/curing equipment, were initially considered for purposes of "beyond the floor" calculations. However, a preliminary evaluation showed these control options to be cost prohibitive. Cost details are provided in Chapter 6 for the add-on control alternative strategies.

Although organic HAP emissions from wood building products surface coating operations are essentially uncontrolled, there has been pressure in the past for the wood building products industry to reduce organic HAP emissions. Some facilities have already switched or are in the

process of switching to low- or no-HAP coatings. The MACT floor limits presented in Table 4-8 are primarily based on those facilities using coatings with relatively low- or no-HAP contents. It is presumed that once the needed organic HAP emission levels are established, other wood building products facilities will work with their coating suppliers to reformulate surface coating materials to comply with the NESHAP. Reformulation can be achieved in several ways, including switching to one of the following: waterborne coatings, radiation-curable coatings, such as UV- or EB-cured coatings, and other high-solids coatings as defined in Chapter 3. Also, using low- or no-HAP solvents for thinning solvents and cleaning materials is another type of reformulation.

The HAP content of various coatings cannot be viewed in a vacuum. It is important to consider the issue of organic HAP emissions versus VOC emissions in all reformulation scenarios. Approximately 58 percent of the VOCs used as solvents in wood building products surface coatings are also organic HAPs, as described in Chapter 3. The data show, however, that reducing VOC content does not necessarily mean that HAP content will be reduced in a specific coating. Many of the coatings have multiple solvent components, and if the coating manufacturer chooses to reduce or eliminate non-HAP solvents, the organic HAP content would not change (or may increase). Similarly, reductions in organic HAPs via substitution may not reduce the VOC content either (i.e., lower-HAP coatings are not necessarily lower-VOC coatings). While there is no direct correlation between reducing organic HAPs and VOCs in each specific coating, it is believed that reducing VOCs overall will result in organic HAP emission reductions as well.

The approach for determining the MACT floor emission limits being considered for this industry involves setting organic HAP emission limits for overall wood building products surface coating operations. The overall facility organic HAP emission limits for both new or reconstructed and existing affected sources are located in Table 4-8.

Table 4-8. Overall Facility Organic HAP Emission Limits By Subcategory

	Model Plant Type				
	Doors and windows	Flooring	Interior wall paneling and tileboard	Other interior panels	Exterior siding, doorskins, and miscellaneous
Model plant number	1	2	3	4	5
Number of facilities in database	11	5	6	13	12
Estimated number of facilities in industry	50	50	15	25	65
Number of facilities in MACT floor	6	4	5	5	8
HAP emission limit for new or reconstructed affected sources (lb HAP/gal solids)	0.48	0.00	0.04	0.00	0.00
HAP emission limit for existing affected sources (lb HAP/gal solids)	1.45	0.78	1.53	0.01	0.06

4.4 REFERENCES

1. Reeves, D., MRI, to Lluberas, L., EPA/CCPG and Sorrels, L., EPA/ISEG. December 18, 2000. Number of Major Sources Estimated to be Subject to the Wood Building Products (Surface Coating) NESHAP.

2. Threatt, B. and Reeves, D., MRI, to Lluberas, L., EPA/CCPG, December 22, 2000. Determination of MACT Floors for the Wood Building Products Surface Coating National Emission Standards for Hazardous Air Pollutants (NESHAP).

3. Reeves, D., MRI, to Lluberas, L., EPA/CCPG, June 28, 2000. Site Visit – ABTco, Incorporated; Toledo, Ohio, Wood Building Products (Surface Coating) NESHAP.

Chapter 5
Summary of Environmental and Energy Impacts

This chapter presents primary air, secondary environmental (air, water, and solid waste), and energy impacts for existing major sources resulting from the control of HAP emissions under the proposed standards for the wood building products (surface coating) source category. Due to consolidation throughout the industry both before and after the proposed standards, there is not expected to be any net growth within the wood building products surface coating industry within the next 5 years. All calculations and conclusions regarding environmental and energy impacts are based on the MACT floors identified in Chapter 4, Model Plants and Control Options.

Since MACT for this industry primarily involves reformulation or selection of low- or no-HAP coatings, environmental and energy impacts to the industry are greatly simplified. The primary air impacts and secondary environmental impacts are discussed in sections 5.1 and 5.2, respectively. There is minimal impact to energy consumption resulting from implementing the control option(s) for existing major source wood building products surface coating facilities.

Add-on controls (i.e., oxidizers and adsorbers) for coating application lines and drying/curing ovens, were initially considered for purposes of "above the floor" calculations. This control option would have a significant affect on primary and secondary air impacts, water impacts, solid waste impacts, energy, and cost impacts. For these reasons and the preliminary evaluation of costs, the "above the floor" control option was found to be unfeasible (e.g., not cost effective) for

any of the subcategories comprising the wood building products (surface coating) source category.

5.1 PRIMARY AIR IMPACTS

Primary air impacts consist of the reduction in organic HAP emissions (from the baseline level) that is directly attributable to the proposed standards. The proposed standards are expected to reduce organic HAP emissions from existing wood building products surface coating facilities by approximately 3,500 tons per year (ton/yr) [3,200 megagrams per year (Mg/yr)], or 61 percent, from a baseline level of 5,600 ton/yr (5,100 Mg/yr). Summaries of the primary air impacts for each subcategory associated with implementation of the proposed standards are listed in Table 5-1.

Tables 5-2 through 5-6 present the baseline organic HAP emissions and the organic HAP emissions that are expected after MACT, by subcategory, for each of the 44 major source facilities and three synthetic minor source facilities. Tables 5-2 through 5-6 also present the organic HAP emissions for the proposed standards. The organic HAP emissions in Table 5-1 are estimated using the model plant average values and the MACT floor organic HAP emission limits for each subcategory from Chapter 4 in Tables 4-1 and 4-8, respectively. Therefore, since the totals from Table 5-1 represent the emissions from the estimated 205 major source facilities and Tables 5-2 through 5-6 only represent the 47 database facilities, each subcategory has to be scaled up or extrapolated to give the same results.

Table 5-1. Summary of Primary Air Impacts - Existing Sources

Subcategory	Estimated number of facilities[a]	Baseline HAP emissions[b] (tons)	HAP emissions after MACT[c] (tons)	HAP emission reduction (from baseline)	
				Tons/yr	Percent
Doors and windows[d]	50	2,608	712	1,896	73
Flooring	50	356	191	165	46
Interior wall paneling and tileboard	15	1,576	925	651	41
Other interior panels	25	278	4	274	99
Exterior siding, doorskins, and miscellaneous	65	841	361	480	57
Total	205	5,659	2,193	3,466	61

[a] The estimated number of U. S. facilities in the industry was determined using industry information, Toxic Release Inventory (TRI) data, and the facilities/emissions information in the project database.

[b] The baseline emissions for the entire industry were estimated by extrapolating the average emissions after control for each subcategory in the project database as identified in Table 4-1 of Chapter 4. The extrapolation started with the number of major source facilities in the project database and increased the emissions to account for the estimated total number of major source facilities in the industry.

[c] The HAP emissions after MACT for the entire industry were estimated by multiplying the emission limits for existing sources in Table 4-8 by the average coating solids in Table 4-1 and then extrapolating to the estimated number of major sources in the entire industry. The HAP emissions after MACT do not include any trace HAPs or trace metals (inorganic HAPs).

[d] The window, door, and miscellaneous subcategory includes one facility with confidential business information (CBI). Since the HAP emissions after MACT are based on average model plant solids usages, then the number does not include the solids usage for the one CBI facility.

Table 5-2. Summary of Doors and Windows Air Impacts

Blind facility ID	Baseline HAP emissions (tons)	HAP emissions after MACT (tons)	Percent reduction (%)
A-1	10.06	3.71	63
A-2	56.21	5.98	89
A-3[a]	26.51	3.98	85
A-4	62.16	57.44	8
A-5	298.78	23.23	92
A-6	17.05	12.84	25
A-7	1.65	1.65	0
A-8	95.28	43.43	54
A-9	3.17	3.17	0
A-10	0.06	0.03	52
A-11[a]	2.89	2.89	0
Totals	573.82	158.35	72

[a] This facility is a synthetic minor source. Synthetic minor sources are used to calculate the MACT floor, but are not subject to the standard.

Table 5-3. Summary of Flooring Air Impacts

Blind facility ID	Baseline HAP emissions (tons)	HAP emissions after MACT (tons)	Percent reduction (%)
B-1	0.00	0.00	0
B-2	15.31	10.23	33
B-3	2.55	2.55	0
B-4	7.83	1.48	81
B-5	9.90	0.24	98
Totals	35.59	14.50	59

Table 5-4. Summary of Interior Wall Paneling and Tileboard Air Impacts

Blind facility ID	Baseline HAP emissions (tons)	HAP emissions after MACT (tons)	Percent reduction (%)
C-1	106.83	106.83	0
C-2	286.38	40.40	86
C-3	2.66	2.66	0
C-4	24.92	24.92	0
C-5	144.01	44.13	69
C-6	65.55	11.56	82
Totals	630.35	230.50	63

Table 5-5. Summary of Other Interior Panel Air Impacts

Blind facility ID	Baseline HAP emissions (tons)	HAP emissions after MACT (tons)	Percent reduction (%)
D-1	2.47	0.03	99
D-2	44.14	0.12	100
D-3	40.22	0.31	99
D-4	0.00	0.00	0
D-5	0.03	0.03	0
D-6	0.54	0.54	0
D-7	0.48	0.03	95
D-8	7.13	0.03	100
D-9	1.67	0.10	94
D-10	0.60	0.00	99
D-11	35.40	0.15	100
D-12	0.60	0.06	89
D-13	11.03	0.05	100
Totals	144.31	1.45	99

Table 5-6. Summary of Exterior Siding, Doorskin, and Miscellaneous Air Impacts

Blind facility ID	Baseline HAP emissions (tons)	HAP emissions after MACT (tons)	Percent reduction (%)
E-1	6	6	0
E-2[a]	7	7	0
E-3	3	3	8
E-4	5	3	38
E-5	3	3	6
E-6	1	1	0
E-7	54	24	56
E-8	20	12	42
E-9	51	6	88
E-10	0	0	0
E-11	1	1	0
E-12	3	1	70
Totals	155	67	57

[a] This facility is a synthetic minor source. Synthetic minor sources are used to calculate the MACT floor, but are not subject to the standard.

5.2 SECONDARY ENVIRONMENTAL IMPACTS

Secondary environmental impacts consist of any adverse or beneficial environmental impacts other than the primary air impacts described in Section 5.1. Secondary environmental impacts include the following: (1) secondary air impacts, (2) water impacts, and (3) solid waste impacts. To comply with the proposed standard, it is anticipated that most wood building products surface coating operations will switch to low- or no-HAP coatings to reduce organic HAP emissions. Therefore, secondary air, water, and solid waste impacts from switching to low- or no-HAP coatings are expected to be minimal. A small number of wood building products surface coating operations will continue to use existing add-on control equipment to reduce emissions. New add-on control equipment is not expected to be a cost-effective alternative due to the high capital and annual costs associated with control devices. Therefore, there should be no additional secondary impacts due to add-on control devices.

5.2.1 Secondary Air Impacts

Secondary air impacts consist of: (1) generation of by-products from fuel combustion needed to operate control devices and (2) reduction of VOC. Since there will be no new add-on control devices implemented as part of the standard for either new or existing sources, there will be no generation of by-products from fuel combustion needed to operate control devices. Secondary air impacts also include the reduction of VOC emissions. The VOC compounds are precursors to ozone. Emissions of organic HAP compounds that are also VOC may be reduced by the implementation of the standards, but the amount of VOC reduction achieved by the standard has not been quantified.

5.2.2 Secondary Water Impacts

There are no direct impacts to water resulting from reformulation to low- or no-HAP coatings. When higher solids coatings are utilized, less coating is used and the total amount of overspray would be expected to be reduced since the total volume of coating solids will be applied. An increased use of low- or no-HAP waterborne coatings may result in increased water discharge due to the coating equipment being cleaned using water. However, the water impacts are expected to be minimal.

5.2.3 Secondary Solid Waste Impacts

Solid waste impacts are expected to be minimal. The pollutants produced from wood building products surface coating operations are expected to consist mainly of volatilized solvents (i.e., organic HAP); therefore, very little particulate matter or solid waste will be generated.

5.3 ENERGY IMPACTS

Energy impacts primarily consist of the fuel usage and electricity needed to operate control devices (especially RTOs) that are used to comply with the proposed standards. New control devices are not expected to be added as a result of the standard for either new or existing sources, so there should be no additional energy impacts. Also, minimal energy impacts are associated with the reformulation of existing higher HAP-content coatings to low- or no-HAP coatings.

Chapter 6
Model Plant Control Costs

6.0 INTRODUCTION

As described in Chapter 4, Model Plants and Control Options, the project database contains information from 44 major source facilities and three synthetic minor source facilities. The 44 major source facilities comprise approximately 20 percent of the estimated 205 major source wood building products surface coating facilities in the United States. The model plants and estimated control costs were developed as representative of the actual facilities comprising each industry subcategory. This chapter describes the estimated costs of NESHAP compliance for all facilities in the five industry subcategories.

There are two basic options for controlling organic HAP emissions: the use of low- or no-HAP coatings, dictated by the MACT floor; or the use of an RTO, chosen as the "beyond the floor" control option. Sections 6.1 through 6.9 detail the costs associated with low- or no-HAP coatings. Sections 6.10 through 6.14 detail the costs associated with the "beyond the floor" control option to control organic HAP emissions. Section 6.15 compares the costs of using low- or no-HAP coatings with the costs of add-on controls (RTOs) and explains the reasoning for choosing the pollution prevention alternative. Section 6.16 contains References.

Section 6.1 describes each of the components used in calculating total coating-related costs:

- Material costs;
- Recordkeeping and reporting; and
- Performance testing for add-on control device(s).

After explaining the background for each calculated cost component, the specific coating cost details for the five subcategories in the wood building products surface coating industry are provided in Sections 6.2 through 6.6. Section 6.7 summarizes the cost effectiveness, or cost per mass of organic HAP controlled, for each of the proposed subcategories and for the overall industry. Section 6.8 shows the annual costs that will be required for the estimated major sources in the industry to comply with the NESHAP requirements by using low- or no-HAP coatings. Section 6.9 details the small business cost impact from using low- or no-HAP coatings.

Section 6.10 describes these components used in calculating RTO costs:

- Equipment costs for RTOs and permanent total enclosures;
- RTO maintenance costs;
- Recordkeeping and reporting costs;
- Computer equipment costs; and
- Performance testing for RTOs.

After explaining the background for each calculated cost component, the specific cost details for the five subcategories in the wood building products surface coating industry are provided in Section 6.11. Section 6.12 summarizes the cost effectiveness, or cost per mass of organic HAP controlled, for each of the proposed subcategories and for the overall industry. Section 6.13 shows the annual costs that will be required for the estimated major sources in the industry to comply with the NESHAP requirements by installing RTOs. Section 6.14 details the small business cost impact of requiring RTO usage.

6.1 COST ESTIMATES USING LOW- OR NO- HAP COATINGS

6.1.1 Material Costs

The purpose of the wood building products (surface coating) NESHAP is to reduce organic HAP emissions resulting from surface coating operations. It is expected that the format of the NESHAP will limit the amount of organic HAP emitted relative to the volume of coating solids applied during a calendar month. This monthly limit will then be used to calculate a 12-month

rolling average that must be met by each affected facility. Most facilities will use low- or no-HAP materials, while a few facilities will use existing add-on control devices to meet this requirement. Cost estimates are not included in this chapter pertaining to facilities that may choose to use existing add-on control devices rather than low- or no-HAP coatings.

To calculate the costs associated with low- or no-HAP coatings, some assumptions were made. Having little or no information available from coating suppliers, an estimated average cost of $20 per gallon (gal) of coating was used, along with the assumption that low- or no-HAP coatings will cost an additional 10 percent. The coating usage at each facility was analyzed to estimate the amount of higher HAP-containing coatings used by the facility in the baseline year of 1997. For purposes of this analysis, a higher HAP-containing coating is defined as one whose organic HAP content per volume of solids (lb HAP/gal solids) is greater than the MACT floor organic HAP emission limit for the applicable facility subcategory. Costs were calculated using the assumption that each facility will use the same total volume of coatings that were consumed in the baseline year of 1997. Costs are based on a $22 per gal cost for low- or no-HAP coatings compared to a $20 per gal cost for coatings with higher HAP content. Using the $2 per gal differential, the coating cost is the incremental cost to the facility rather than a total material investment.

For each of the five subcategories, there is a summary table that lists all costs associated with each facility in the project database. These summaries are presented in Tables 6-5 through 6-9. For each subcategory. facilities were classified as MACT floor facilities, synthetic minor facilities, and/or small business facilities. Although used in determining the MACT floor limits for the applicable subcategories, the three synthetic minor source facilities were not assigned any compliance costs since they will not be required to comply with any of the NESHAP requirements. If a major source facility has a calculated organic HAP emission level equal to or lower than the emission limit for its subcategory, there are no associated material costs for the facility. On the other hand, if a facility has a calculated organic HAP emission level above the organic HAP emission limit for the subcategory, there are material costs at a rate of $2 per gal of

higher HAP-containing coating used. The total estimated cost for low- or no-HAP coatings is an additional $22.1 million per year for the entire industry of 205 major source facilities.

6.1.2 Recordkeeping and Reporting Costs

6.1.2.1 Labor Costs

Since recordkeeping and reporting will be done on a continuous basis after the compliance date, the associated costs are considered annual costs. Recordkeeping and reporting labor requirements were calculated based on assumed activities and time required for each activity. The required compliance activities were listed and assigned a time estimate, based on the difficulty of the task and the following assumptions. For all activities, regular work hours are assumed to be 2 shifts per day, 5 days per week, and 50 weeks per year. Based on database information, a typical facility has three separate coating lines, and uses nine coatings, one thinning solvent, and one cleaning solvent in surface coating operations. Using an average of all database facilities, there are 37 coating employees for a typical facility.

The following paragraphs contain a detailed description of the labor requirements for recordkeeping and reporting activities. Most of the activities are related to the recordkeeping aspect of the NESHAP. First, the technical contact, most likely an environmental or process engineer, must decide the best way to compile the coating data and calculate the related organic HAP emissions. This typically will involve a spreadsheet where all relevant coating information is contained and used to calculate the organic HAP emissions for each coating line. Once the engineer knows what information is required to calculate the coating-related emissions for the facility, all coating personnel must be trained to gather the required information. The first data-gathering step occurs at the coating line itself. Coating operators or paint room personnel will track the amount of coating used during each shift on each line. Material safety data sheets (MSDS), technical data sheets, and/or HAP data sheets are consulted for the organic HAP content, solids content, and density of each coating. When this data has been collected, the clerical department enters all data into the spreadsheet. The spreadsheet is used to calculate the total coating line emissions during each shift, day, and month. On a weekly basis, the environmental engineer checks the data for entry errors and for compliance trends or issues.

Approximately once every three months, the engineer will have to make adjustments to the coating process to maintain the monthly compliance limits. The engineer will also be in charge of coordinating and maintaining the data that is transferred between departments each day.

Each facility will be required to comply with the overall organic HAP emission limit on a monthly basis, and reporting will be done semiannually. The report will include the monthly totals, an overall average organic HAP emission rate, and a compliance status report. Depending on the facility emissions, there will be either a report of no exceedances or a report of deviations.

Once the labor hour requirements were estimated, labor rates were calculated using 1997 Bureau of Labor Statistics data for Standard Industrial Classification (SIC) code groupings 242, 243, and 249. Using the affected SIC codes of 2426, 2429, 2431, 2435, 2436, 2439, 2493, and 2499, SIC code groups 242, 243, and 249 were represented two times, four times, and two times, respectively. To get a weighted average for technical, managerial, clerical, and coating line staff, the sum of the labor rates was divided by eight. The base labor rate was then scaled up to include overhead, profit, and all employee benefits. The fully burdened labor rate was calculated by summing (a) the base labor rate, and (b) 110 percent of the base labor rate. The hourly rates used for a technical contact, a managerial supervisor, a clerical assistant, and a coating/painting/ spraying machine operator, were $50.33, $59.75, $21.80, and $20.65, respectively. These labor rates are summarized in Table 6-1.

Using the individual labor rates and the labor hours for recordkeeping and reporting, the average annual cost is $26,500 for each major source facility. The totals and specific details are summarized in Table 6-2. For the entire industry of 205 major source facilities, recordkeeping and reporting labor is estimated to cost $5.4 million annually.

Table 6-1. Labor Rates for Recordkeeping and Reporting

Labor Type	SIC Group			Average Labor Rate	110% of Average Labor Rate	Total Labor Rate[d]
	242[a]	243[b]	249[c]			
Technical Labor Rate ($/hr)	$25.19	$23.31	$24.06	$23.97	$26.36	$50.33
Management Labor Rate ($/hr)	$32.08	$26.15	$29.42	$28.45	$31.30	$59.75
Clerical Labor Rate ($/hr)	$10.29	$10.61	$10.01	$10.38	$11.42	$21.80
Coating, Painting and Spraying Machine Operator Labor Rate ($/hr)	$10.96	$9.63	$9.11	$9.83	$10.82	$20.65

[a] SIC Group 242 represents SIC Codes 2426 and 2429.
[b] SIC Group 243 represents SIC Codes 2431, 2435, 2436, and 2439.
[c] SIC Group 249 represents SIC Codes 2493 and 2499.
[d] Total Labor Rate is the sum of the Average Labor Rate and 110% of the Average Labor Rate.

6.1.2.2 Computer Equipment Costs

As detailed in the previous section, recordkeeping and reporting costs assume the use of a computer and software for tracking the coating usages for each facility. Assumptions were made concerning the cost of computer equipment and the number of respondents required to buy the equipment. A cost of $2,000 for the equipment was estimated for the computer, associated accessories, and the spreadsheet software. Facilities using more than 100,000 gal per year (gal/yr) were excluded from the requirement because of the assumption that computer equipment is already available. Of the 44 major sources, an estimated 25 may require computer equipment. Scaling the number to include the estimated industry of 205 major sources, there will be an estimated 119 facilities requiring computer equipment. Assuming that a new computer will be bought every five years and the interest rate is 7 percent, the capital recovery factor is 0.2439. Multiplying the capital investment cost of $2,000 by the capital recovery factor yields an annualized computer equipment cost of $488 per facility, bringing the total industry cost for computer equipment to $58,000. These findings are summarized in Table 6-3.

The recordkeeping and reporting costs are greatly influenced by the labor costs, rather than by the cost of computer equipment. The combined total for recordkeeping and reporting is $5.5 million. The two items are summarized in Table 6-4.

6.1.3 Performance Testing Costs for Add-On Control Devices

There are 44 major source facilities in the project database, including 3 facilities that use add-on control devices to control organic HAP emissions from surface coating operations. In order to verify that the add-on control devices are performing at adequate levels of control, performance testing is required for each add-on control device. For purposes of costing, it was estimated that each test would require 240 hours from a trained contractor at a labor rate of $80 per hour. For facilities with multiple add-on control devices, the performance testing was costed accordingly. Under normal circumstances, this testing will be performed every five years, so the costs were annualized using a 5-year equipment life and an interest rate of 7 percent. The resulting capital recovery factor is 0.2439 and the annualized cost for performance testing is $4,683 per control device. For the 3 database facilities using add-on control devices, the total annualized cost is

$65,560 per year. Assuming that approximately 14 of the 205 major source facilities have existing add-on control devices and scaling the figure accordingly, performance testing will cost an estimated $256,248 per year.

Table 6-2. Recordkeeping and Reporting Labor Requirements

Burden item	(A) Person-hours per occurrence	(B) Number of occurrences per year	(C) Person-hours per respondent per year (C = A x B)	(D) Respondents per year	(E) Technical person-hours per year (E = C x D)	(F) Management person-hours per year (F = E x 0.05)	(G) Clerical person-hours per year (G = E x 0.1)	(H) Cost, $[a]
1. Applications	N/A							
2. Surveys and studies	N/A							
3. Reporting requirements								
A. Read regulation	4	1	4	205[b]	820	41	82	45,508
B. Apply for waiver	6[c]	1	6	2[d]	12	1	1	666
C. Required activities								
Technical								
Training of coating-related personnel each year	4	4[e]	16	205	3,280	164	328	182,032
Set-up and maintain coating data spreadsheet for regulation compliance	4	1	4	205	820	41	82	45,508
Coordinate purchasing, operations and clerical for information transfer each month	1	12	12	205	2,460	123	246	136,524
Check spreadsheet for data entry errors weekly	1	50[f]	50	205	10,250	513	1,025	568,849
Compile and maintain records of coatings data each week	1.5[c]	50[f]	75	205	15,375	769	1,538	853,274
Using compiled data, adjust process to comply with standard every quarter	2	4	8	205	1,640	82	164	91,016
Clerical								
Enter data into spreadsheet to tabulate information each day	1[g]	250[h]	250	205	0	0	51,250[i]	1,117,250
Operations								
Track coating usage in spreadsheet or log book each shift	1[j]	500[k]	500	205	102,500	0	0	2,116,625[l]
D. Create information	Incl. in 3B							0
E. Gather existing information	Incl. in 3B							0

Table 6-2. Continued

Burden item	(A) Person-hours per occurrence	(B) Number of occurrences per year	(C) Person-hours per respondent per year (C = A x B)	(D) Respondents per year	(E) Technical person-hours per year (E = C x D)	(F) Management person-hours per year (F = E x 0.05)	(G) Clerical person-hours per year (G = E x 0.1)	(H) Cost, $[a]
F. Write semi-annual report								
Write compliance status report	4[c]	2	8	203[m]	1,624	81	162	90,128
Write performance test report	16	0.20[n]	3	14[o]	45	2	4	2,486
Report of no exceedances	8[c]	2	16	203[m]	3,248	162	325	180,256
Write report of excess emissions	16[c]	2	32	2[n]	64	3	6	3,552
Total recurrent burden and cost					142,135	1,982	55,213	5,433,674
Average recurrent burden and cost per facility:					693	10	269	26,506

[a] Costs are based on the following hourly rates: technical at $50.33, management at $59.75, and clerical at $21.80. The composite hourly labor rate is $55.50/hr (50.33 + 0.05 x 59.75 + 0.1 x 21.80 = 55.50).

[b] Assumes all 205 major source facilities will read the regulation.

[c] From ESD manual Table 3 "Burden of NSPS and NESHAP Notification Reports, Excess Emission Reports and Recordkeeping."

[d] Assumes 1 percent of 205 major source facilities will apply for a waiver.

[e] Assuming an average of 37 coating employees, training will occur quarterly with 9 trainees per session.

[f] Assumes 50 weeks per year.

[g] Assumes 11 coatings per line and 3 lines per facility with 2 shifts, requiring 1 minute per entry.

[h] Assumes 50 weeks per year and 5 days per week.

[i] Assumes clerical instead of technical labor rate for data entry. (G= C x D)

[j] Assumes 11 coatings per line and 3 lines per facility, requiring 2 minutes per entry per shift.

[k] Assumes 2 shifts per day, 5 days per week, and 50 weeks per year.

[l] Cost is based on a Coating, Painting and Spraying Machine Operator weighted labor rate of $20.65.

[m] Assumes 99 percent of 205 major source facilities will be in compliance.

[n] Assumes one test every 5 years or 0.20 test reports per year.

[o] Assumes 3 of every 44 (14 of 205) major source facilities will use add-on control devices to comply with the NESHAP.

[p] Assumes 1% of 205 major source facilities will be out of compliance.

Table 6-3. Computer Equipment Cost Summary

	Doors and windows	Flooring	Interior wall paneling and tileboard	Other interior panels	Exterior siding, doorskins, and miscellaneous	Totals
Database facilities requiring computer equipment	6	5	1	11	2	25
Number of major sources in database	9	5	6	13	11	44
Estimated major sources in industry[1]	50	50	15	25	65	205
Estimated number of major sources requiring computer equipment	33	50	3	21	12	119
Estimated cost to industry	$16,260	$24,390	$1,220	$10,319	$5,765	$57,953

Table 6-4. Summary of Recordkeeping and Reporting Costs

	Doors and windows	Flooring	Interior wall paneling and tileboard	Other interior panels	Exterior siding, doorskins, and miscellaneous	Totals
Labor for entire estimated industry	$1,325,000	$1,325,000	$397,500	$662,500	$1,722,500	$5,432,500
Computer equipment for entire estimated industry	$16,260	$24,390	$1,220	$10,319	$5,765	$57,953
Total	$1,341,260	$1,349,390	$398,720	$672,819	$1,728,265	$5,490,453

6.2 DOORS AND WINDOWS (MODEL PLANT 1)

There are 9 major sources and two synthetic minor source facilities in the project database that coat doors and windows. Only one facility uses add-on control devices to control emissions from coating operations. The controlled facility has four add-on control devices, but will still be required to invest in low- or no-HAP coatings.

Using the total annual costs for the 9 major source facilities in the project database (see Table 6-5) and the assumption that there are an estimated 50 major sources[1] in the doors and windows subcategory, the total annual costs for the subcategory were calculated. The total annual cost to the subcategory is estimated to be $7.6 million.

6.3 FLOORING (MODEL PLANT 2)

There are five major source flooring facilities in the project database. The flooring subcategory has only one facility in the project database that uses an add-on control device to control organic HAP emissions from surface coating operations. Since this facility meets the proposed MACT floor limit for this subcategory, there are no related material costs.

Using the total annual costs for the five major source facilities in the project database and the assumption that there are 50 major sources[1] in the flooring subcategory, the total annual costs for this subcategory are shown in Table 6-6.

6.4 INTERIOR WALL PANELING AND TILEBOARD (MODEL PLANT 3)

The interior wall paneling and tileboard subcategory contains six major sources in the project database, only one of which uses add-on control devices. That particular facility reported using nine add-on control devices (thermal incinerators) to control coating-related organic HAP emissions.

Using the total annual costs for the six major source facilities in the project database and the assumption that there are 15 major sources[1] in the subcategory, the total annual cost to the subcategory is estimated to be $1.88 million as summarized in Table 6-7.

6.5 OTHER INTERIOR PANELS (MODEL PLANT 4)

There are 13 other interior panel major source facilities in the project database used in determining the MACT floor organic HAP emission limit. None of these facilities use add-on control devices to control organic HAP emissions from surface coating operations.

Using the total annual costs for the 13 major source facilities in the project database (summarized in Table 6-8) and the assumption that there are 25 major sources[1] in the entire subcategory, the total annual costs for the 25 facilities were calculated. The costs for this subcategory are estimated to be $1.5 million.

Table 6-5. Doors and Windows (Model Plant 1) MACT Costs [a]

	Floor facility?	Synthetic minor?	Small business?	Number of APCDs	Performance testing for control device(s) ($)	Total coating usage (gal)	Coatings usage above emission limit (gal)	Annual material costs ($)	Computer equipment costs ($)	Annual R & R costs ($)	Annual costs ($)
Total	6	2	6	4	18,731				2,927	238,500	$1,374,172

[a] Since one of the 11 facilities has associated CBI, only the totals for this subcategory are shown. The annual cost includes the costs from the CBI facility, but no CBI is shown in this table.

Table 6-6. Flooring (Model Plant 2) MACT Costs

Blind facility	Floor facility?	Synthetic minor?	Small business?	Number of APCDs	Performance testing for control device(s) ($)	Total coating usage (gal)	Coatings usage above emission limit (gal)	Annual material costs ($)	Computer equipment costs ($)	Annual R & R costs ($)	Annual costs ($)
B-1	Yes				0	7,946	0	0	488	26,500	26,988
B-2	Yes				0	37,416	12,284	0	488	26,500	26,988
B-3	Yes			1	4,683	19,273	6,890	0	488	26,500	31,671
B-4	Yes				0	6,628	3,041	6,082	488	26,500	33,070
B-5	Yes				0	1,348	1,348	2,696	488	26,500	29,684
Total	5	0	0	1	$4,683	72,611	23,563	$8,778	$2,440	$132,500	$148,401

Table 6-7. Interior Wall Paneling and Tileboard (Model Plant 3) MACT Costs

Blind facility	Floor facility?	Synthetic minor?	Small business?	Number of APCDs	Performance testing for control device(s) ($)	Total coating usage (gal)	Coatings Usage above emission limit (gal)	Annual material costs ($)	Computer equipment costs ($)	Annual R & R costs ($)	Annual costs ($)
C-1	Yes			9	42,144	320,440	51,013	0	0	26,500	68,644
C-2			Yes		0	154,127	144,655	289,310	0	26,500	315,810
C-3	Yes				0	298,173	4,791	0	0	26,500	26,500
C-4	Yes				0	249,463	69,297	0	0	26,500	26,500
C-5	Yes				0	125,246	99,645	199,290	0	26,500	225,790
C-6	Yes				0	30,513	30,513	61,026	488	26,500	88,014
Total	3	0	1	9	$42,144	1,177,962	399,914	$549,626	$488	$159,000	$751,258

Table 6-8. Other Interior Panels (Model Plant 4) MACT Costs

Blind facility	Floor facility?	Synthetic minor?	Small business?	Number of APCDs	Performance testing for control device(s) ($)	Total coating usage (gal)	Coatings usage above emission limit (gal)	Annual material costs ($)	Computer equipment costs ($)	Annual R & R costs ($)	Annual costs ($)
D-1					0	13,570	11,406	22,812	488	26,500	49,800
D-2					0	70,832	37,074	74,148	488	26,500	101,136
D-3					0	93,101	79,130	158,260	488	26,500	185,248
D-4	Yes				0	7,776	0	0	488	26,500	26,988
D-5	Yes				0	302,758	0	0	0	26,500	26,500
D-6	Yes				0	555,524	1,800	0	0	26,500	26,500
D-7					0	12,028	1,065	2,130	488	26,500	29,118
D-8					0	21,243	16,704	33,408	488	26,500	60,396
D-9	Yes				0	74,606	11,351	22,702	488	26,500	49,690
D-10					0	1,103	761	1,522	488	26,500	28,510
D-11					0	33,413	20,117	40,234	488	26,500	67,222
D-12	Yes				0	27,285	27,285	54,570	488	26,500	81,558
D-13					0	18,155	13,523	27,046	488	26,500	54,034
Total	5	0	0	0	0	1,231,394	220,216	436,832	$5,368	$344,500	$786,700

Table 6-9. Exterior Siding, Doorskins, and Miscellaneous (Model Plant 5) MACT Costs

Blind facility	Floor facility?	Synthetic minor?	Small business?	Number of APCDs	Performance testing for control device(s) ($)	Total coating usage (gal)	Coatings usage above emission limit (gal)	Annual material costs ($)	Computer equipment costs ($)	Annual R & costs ($)	Annual costs ($)
E-1	Yes				0	468,792	62,717	0	$0	$26,500	$26,500
E-2		Yes	Yes		0	146,145	48,647	0	$0	$0	$0
E-3	Yes				0	219,551	208,539	417,078	$0	$26,500	$443,578
E-4	Yes				0	238,249	237,311	474,622	$0	$26,500	$501,122
E-5	Yes				0	237,238	0	0	$0	$26,500	$26,500
E-6	Yes				0	188,132	0	0	$0	$26,500	$26,500
E-7					0	1,992,450	385,574	771,148	$0	$26,500	$797,648
E-8	Yes				0	938,766	72,703	145,406	$0	$26,500	$171,906
E-9					0	454,600	186,701	373,402	$0	$26,500	$399,902
E-10	Yes				0	93,311	0	0	$488	$26,500	$26,988
E-11	Yes				0	207,094	0	0	$0	$26,500	$26,500
E-12					0	58,541	58,541	117,082	$488	$26,500	$144,070
Total	8	1	1	0	0	5,242,869	1,260,733	2,298,738	$976	$291,500	$2,591,214

6.6 EXTERIOR SIDING, DOORSKINS, AND MISCELLANEOUS (MODEL PLANT 5)

There are 12 exterior siding and doorskin facilities in the project database used to determine the MACT floor organic HAP emission limit. Of these, 11 are considered major sources of organic HAP emissions and one facility is a synthetic minor source. None of these facilities use add-on control devices to control organic HAP emissions from surface coating operations.

Using the total annual costs for the 11 major source facilities in the project database (summarized in Tables 6-9) and the assumption that there are 65 major sources[1] in the entire subcategory, the total annual costs for the 65 facilities were calculated. The costs for this subcategory are estimated to be $15.3 million.

6.7 COST EFFECTIVENESS OF LOW- OR NO-HAP COATINGS

Cost effectiveness is the cost per mass of organic HAP controlled and is an indicator of the overall effectiveness of MACT implementation. The data is presented in Table 6-10 for each model plant (subcategory). Table 6-10 summarize the costs incurred by each subcategory, such as recordkeeping and reporting costs, computer equipment costs, material costs, and performance testing costs. The emission reductions shown in the tables are presented in Chapter 5, specifically Table 5-1. To calculate the cost effectiveness of the MACT implementation, the total costs (in dollars) were divided by the anticipated organic HAP reductions (in tons per year or Mg per year).

Table 6-10 summarizes the cost effectiveness of the NESHAP. The cost effectiveness data ranged from $2,900 to $32,000/ton ($3,200 to $35,000/Mg) for the five subcategories and averaged $8,000/ton ($8,800/Mg) for the overall industry.

6.8 ANNUAL COST FOR LOW- OR NO-HAP COATINGS

The annual costs for using the low- or no-HAP coatings option total $27.8 million for the entire industry of 205 major source facilities. Recordkeeping and reporting costs contribute

$5.4 million; computer costs contribute $58,000; performance testing contributes $256,000; and coating costs contribute $22.1 million.

6.9 SMALL BUSINESS IMPACT (LOW- OR NO-HAP COATINGS)

Small businesses are defined as companies that have 500 or fewer corporate employees. There are 12 companies identified as small businesses in the project database. Five of the companies are designated as area sources, according to Title V classification. Therefore, seven small businesses are included in the total population of facilities used in determining MACT. Only four of those facilities are considered major sources of organic HAP emissions and will be required to meet the NESHAP requirements; 3 facilities are considered synthetic minor sources. The annual cost for the four facilities is approximately $471,000 (combined). Based on the project database, an estimate on the number of major source small businesses for the entire source category has been determined to be approximately 20, therefore, the total estimated cost to small business major sources is $2.4 million.

Information on the seven small business facilities is provided in Tables 6-5, 6-7, and 6-9. Due to the confidential business information contained in Table 6-5, the five specific small business facilities are not identified.

Table 6-10. Cost Effectiveness of MACT[a]

MACT implementation	Doors and windows	Model plants: Flooring	Interior wall paneling and tileboard (class 1 hardboard)	Other interior panels	Exterior siding, doorskins, and miscellaneous	Totals
Emission reductions						
Total organic HAP emission reductions (ton/yr)	1,896	165	651	274	480	3,466
Total organic HAP emission reductions (Mg/yr)	1,720	150	591	249	435	3,144
Industry Costs						
Materials ($)	6,188,970	87,780	1,374,065	840,062	13,583,452	22,074,329
Recordkeeping and reporting ($)	1,325,000	1,325,000	397,500	662,500	1,722,500	5,432,500
Computer equipment ($)	16,259	24,389	1,219	10,318	5,765	57,950
Performance testing ($)	104,060	46,827	105,361	0	0	256,248
Total cost for industry ($)	7,634,289	1,483,996	1,878,145	1,512,880	15,311,717	27,821,027
Cost effectiveness ($/ton)	4,027	8,994	2,885	5,521	31,899	8,027
Cost effectiveness ($/Mg)	4,438	9,914	3,180	6,086	35,163	8,848

[a] Sample Calculation for Doors and Windows: Cost Effectiveness = Total cost for industry / Total organic HAP emission reductions ($6,188,970 / 1896 tons = $4,027 /ton).

6.10 "BEYOND THE FLOOR" COST ESTIMATES

"Beyond the floor" options are other methods of organic HAP control that are more stringent than the MACT floor dictates. In this case, a regenerative thermal oxidizer (RTO) was chosen as the "beyond the floor" option required to comply with the wood building products (surface coating) NESHAP. This choice allows for a high level of organic HAP reduction.

For new or reconstructed sources, most of the organic HAP emission limits are 0.00 kg HAP/liter of solids (lb HAP/gallon solids). These limits will achieve 100 percent or nearly 100 percent organic HAP emission reductions. Therefore, no control technologies are available as a "beyond the floor" option for controlling organic HAP from new or reconstructed sources.

"Beyond the floor" costs for each of the five subcategories are summarized in Tables 6-11 through 6-15.

6.10.1 Equipment Costs

Equipment costs for RTOs are based on the dryer exhaust data reported by each facility. For the facilities that did not supply dryer exhaust information, an average value was calculated from the supplied information. Whenever an average value was used, the value is shown in bold type on the summary tables. The total capital investment (TCI) was calculated using a complicated cost model that accounted for equipment purchase, foundation, installation, labor, engineering, and construction. Each facility was assumed to require one RTO except in the following instances:

- Facility E-2 in the Exterior Siding, Doorskins, and Miscellaneous subcategory had such high dryer exhaust flow rates that it was more cost efficient to assume three RTOs for the facility.
- If a facility had a Title V classification of synthetic minor, RTOs were not required and TAC was zero.
- Facilities that were classified as Title V major sources but had no coating line organic HAP emissions were also not required to purchase an RTO.

Total capital investment costs included a cost for permanent total enclosures (PTEs). These are enclosures built around an emission source that ensure 100% of organic HAP emissions are captured. For each facility that was not capturing 100% of organic HAP emissions, the costs were estimated at $500,000. The total capital investment costs were annualized assuming a five year equipment life and an interest rate of 7%. These assumptions result in a capital recovery factor of 0.2439.

For the entire industry of 205 estimated major sources, the annualized capital investment costs for "beyond the floor" options is estimated to be $60.5 million.

6.10.2 Operating Costs

Operating costs for RTOs were calculated using the same cost model as the capital costs. Operating costs include maintenance and labor costs, electricity, auxiliary fuel, overhead, administrative charges, taxes, and insurance. These costs are already annualized in the spreadsheets.

If a facility had a Title V classification of synthetic minor, RTOs were not required and the operating costs were zero. Facilities that were classified as Title V major sources, but had no coating line organic HAP emissions, were also given a zero operating cost.

For the entire industry of 205 major sources, the total RTO operating costs are estimated to be $66.4 million.

6.10.3 Recordkeeping and Reporting Costs

Recordkeeping and reporting costs associated with RTOs were assumed to be the same as for low- or no-HAP coating usage. In order to calculate the emission rate, each facility will still be required to track the amount of coatings used, the organic HAP content of the coatings, and the solids content of the coatings. In addition, each facility will be required to track the fraction of the emission stream that is being controlled and the resulting destruction efficiency. These

additional tasks are not expected to add significantly to the recordkeeping and reporting cost per facility. All assumptions that contributed to the $26,500 cost per facility are contained in Section 6.1.2.1. For the entire industry of 205 estimated major sources, this is assumed to be $5.4 million.

6.10.4 Computer Equipment Costs

Computer equipment was assumed for each facility that used less than 100,000 gallons of coatings yearly. Of the 44 major sources, an estimated 26 may require computer equipment. Scaling the number to include the estimated industry of 205 major sources, there will be an estimated 126 facilities requiring computer equipment. Assuming that a new computer will be bought every 5 years and the interest rate is 7 percent, the capital recovery factor is 0.2439. Multiplying the capital investment cost of $2,000 by the capital recovery factor yields an annualized computer equipment cost of $488 per facility, bringing the total industry cost for computer equipment to $59,000. These costs are summarized in Table 6-3.

6.10.5 Performance Testing Costs

In order to verify that the add-on control devices are performing at adequate levels of control, performance testing is required for each add-on control device. For purposes of costing, it was estimated that each test would require 240 hours from a trained contractor at a labor rate of $80 per hour. For facilities with multiple add-on control devices, the performance testing was costed accordingly. Under normal circumstances, this testing will be performed every 5 years, so the costs were annualized using a five year equipment life and an interest rate of 7 percent. The resulting capital recovery factor is 0.2439 and the annualized cost for performance testing is $4,683 per control device. For the entire industry consisting of 205 estimated major sources, performance testing is estimated to cost $1.1 million.

6.11 "BEYOND THE FLOOR" COST ESTIMATES

6.11.1 Doors and Windows Subcategory

"Beyond the floor" cost estimates are given in Table 6-11. Costs were estimated for each of the 10 major source facilities and one synthetic minor facility in the database. Assuming that there are approximately 50 major source facilities in the subcategory, the estimated annual cost impact is approximately $30.8 million.

6.11.2 Flooring Subcategory

"Beyond the floor" cost estimates are given in Table 6-12 for the flooring facilities. Costs were estimated for each of the five major source facilities in the database. Assuming that there are approximately 50 major source facilities in the subcategory, the estimated annual cost impact is approximately $9.2 million.

6.11.3 Interior Wall Paneling and Tileboard Subcategory

"Beyond the floor" cost estimates are given in Table 6-13 for each of the six major source interior wall paneling and tileboard facilities in the database. Assuming that there are approximately 15 major source facilities in the subcategory, the estimated annual cost impact is approximately $8.8 million.

6.11.4 Other Interior Panels Subcategory

"Beyond the floor" cost estimates are given in Table 6-14 for all other interior panel facilities. Costs were estimated for each of the 13 major source facilities in the database. Assuming that there are approximately 25 major source facilities in the subcategory, the estimated annual cost impact is approximately $13.4 million.

6.11.5 Exterior Siding, Doorskins, and Miscellaneous Subcategory

"Beyond the floor" cost estimates are given in Table 6-15 for those facilities producing exterior siding, doorskins, and miscellaneous products. Costs were estimated for each of the 11 major

source facilities and one synthetic minor facility in the database. Assuming that there are approximately 65 major source facilities in the subcategory, the estimated annual cost impact is approximately $71.4 million.

6.12 COST EFFECTIVENESS FOR "BEYOND THE FLOOR" OPTION

Cost effectiveness is summarized in Table 6-16. Organic HAP reductions were calculated assuming a capture efficiency of 100% (while using a PTE) and a destruction efficiency of 90 percent. Table 6-16 summarizes the cost effectiveness.

The cost effectiveness ranges from $6,200 to $91,000 per ton of organic HAP reduced and averages $25,300 per ton of organic HAP reduced.

6.13 ANNUAL COSTS FOR "BEYOND THE FLOOR" OPTION

The annual costs for installing and maintaining RTOs, chosen as the "Beyond the floor" option, total $133.5 million for the entire industry of 205 major source facilities. Recordkeeping and reporting contributes $5.4 million; computer costs contribute $58,000; performance testing contributes $1.1 million; annualized capital costs contribute $60.5 million; and annual operating costs contribute $66.4 million.

6.14 SMALL BUSINESS IMPACT ("BEYOND THE FLOOR" OPTION)

For the four major source small businesses in the database, the total annual cost is approximately $2 million to purchase, install, and maintain RTOs. Assuming that there are 20 small business facilities in the entire industry, the impact to all small businesses in the wood building products surface coating industry is $10.6 million.

Table 6-11. "Beyond the Floor" Cost Options for Doors and Windows[a]

Blind facility ID	Synthetic minor?	Small business?	Number of APCDs	TCI (RTO)	Annualized TCI (RTO)	Operating costs (RTO)	Performance testing for control device(s)	Computer equipment costs	Annual R & R costs	Annual Costs
A-1			1	$1,526,361	$372,265	$447,657	$4,683	$488	$26,500	$851,593
A-2		Yes	1	$955,956	$233,149	$237,367	$4,683	$488	$26,500	$502,187
A-3	Yes	Yes	1	$0	$0	$0	$0	$0	$0	$0
A-4			4	$500,000	$121,945	$0	$18,731	$0	$26,500	$167,176
A-5			1	$1,157,646	$282,339	$311,224	$4,683	$0	$26,500	$624,746
A-6			1	$1,570,544	$383,041	$464,171	$4,683	$488	$26,500	$878,883
A-7		Yes	1	$935,075	$228,056	$229,744	$4,683	$488	$26,500	$489,471
A-8			1	$1,688,021	$411,693	$508,302	$4,683	$0	$26,500	$951,178
A-9			1	$1,076,970	$262,663	$281,629	$4,683	$488	$26,500	$575,963
A-10		Yes	1	**$941,057**	$229,515	**$248,009**	$4,683	$488	$26,500	$509,195
A-11	Yes	Yes	0	$0	$0	$0	$0	$0	$0	$0
Totals	2	5	13		$2,524,666	$2,728,103	$56,195	$2,928	$238,500	$5,550,392

[a] Values in bold type indicate that an average value was used.

Table 6-12. "Beyond the Floor" Cost Options for Flooring[a]

Blind facility ID	Synthetic minor?	Small business?	Number of APCDs	TCI (RTO)	Annualized TCI (RTO)	Operating costs (RTO)	Performance testing for control device(s)	Computer equipment costs	Annual R & R costs	Annual Costs
B-1			0	$0	$0	$0	$0	$488	$26,500	$26,988
B-2			1	$938,477	$228,886	$230,985	$4,683	$488	$26,500	$491,542
B-3			1	$0	$0	$0	$4,683	$488	$26,500	$31,671
B-4			1	**$312,826**	$76,295	**$76,995**	$4,683	$488	$26,500	$184,961
B-5			1	**$312,826**	$76,295	**$76,995**	$4,683	$488	$26,500	$184,961
Total	0	0	4		$381,476	$384,975	$18,732	$2,440	$132,500	$920,123

[a] Values in bold type indicate that an average value was used.

Table 6-13. "Beyond the Floor" Cost Options for Interior Wall Paneling and Tileboard[a]

Blind facility ID	Synthetic minor?	Small business?	Number of APCDs	TCI (RTO)	Annualized TCI (RTO)	Operating costs (RTO)	Performance testing for control device(s)	Computer equipment costs	Annual R & R costs	Annual Costs
C-1			9	$500,000	$121,945	$0	$42,144	$0	$26,500	$190,589
C-2			1	**$1,109,707**	$270,647	**$276,844**	$4,683	$0	$26,500	$578,674
C-3			1	$1,285,369	$313,490	$358,243	$4,683	$0	$26,500	$702,916
C-4			1	**$1,109,707**	$270,647	**$276,844**	$4,683	$0	$26,500	$578,674
C-5			1	$1,688,089	$411,709	$508,328	$4,683	$0	$26,500	$951,220
C-6			1	$965,368	$235,444	$240,805	$4,683	$488	$26,500	$507,920
Total	0	0	14		$1,623,882	$1,661,064	$65,559	$488	$159,000	$3,509,993

[a] Values in bold type indicate that an average value was used.

Table 6-14. "Beyond the Floor" Cost Options for Other Interior Panels[a]

Blind facility ID	Synthetic minor?	Small business?	Number of APCDs	TCI (RTO)	Annualized TCI (RTO)	Operating costs (RTO)	Performance testing for control device(s)	Computer equipment costs	Annual R & R costs	Annual Costs
D-1			1	$1,023,186	$249,546	$261,939	$4,683	$488	$26,500	$543,156
D-2			1	**$986,317**	$240,554	**$262,719**	$4,683	$488	$26,500	$534,944
D-3			1	$1,009,740	$246,266	$257,021	$4,683	$488	$26,500	$534,958
D-4			0	$0	$0	$0	$0	$488	$26,500	$26,988
D-5			1	**$986,317**	$240,554	**$262,719**	$4,683	$0	$26,500	$534,456
D-6			1	$1,426,565	$347,926	$410,504	$4,683	$0	$26,500	$789,613
D-7			1	$977,806	$238,478	$245,348	$4,683	$488	$26,500	$515,497
D-8			1	**$986,317**	$240,554	**$262,719**	$4,683	$488	$26,500	$534,944
D-9			1	$1,211,430	$295,456	$330,997	$4,683	$488	$26,500	$658,124
D-10			1	**$986,317**	$240,554	**$262,719**	$4,683	$488	$26,500	$534,944
D-11			1	$1,322,023	$322,429	$371,779	$4,683	$488	$26,500	$725,879
D-12			1	$919,787	$224,327	$224,165	$4,683	$488	$26,500	$480,163
D-13			1	**$986,317**	$240,554	**$262,719**	$4,683	$488	$26,500	$534,944
Total			12		$3,127,198	$3,415,348	$56,196	$5,368	$344,500	$6,948,610

[a] Values in bold type indicate that an average value was used.

Table 6-15. "Beyond the Floor" Cost Options for Exterior Siding, Doorskins and Miscellaneous[a]

Blind facility ID	Synthetic minor?	Small business?	Number of APCDs	TCI (RTO)	Annualized TCI (RTO)	Operating costs (RTO)	Performance testing for control device(s)	Computer equipment costs	Annual R & R costs	Annual costs
E-1			1	**$1,886,475**	$460,094	**$517,220**	$4,683	$0	$26,500	$1,008,497
E-2	Yes	Yes	0	$0	$0	$0	$0	$0	$0	$0
E-3			1	**$1,886,475**	$460,094	**$517,220**	$4,683	$0	$26,500	$1,008,497
E-4			1	$994,950	$242,659	$251,614	$4,683	$0	$26,500	$525,456
E-5			1	**$1,886,475**	$460,094	**$517,220**	$4,683	$0	$26,500	$1,008,497
E-6			1	**$1,886,475**	$460,094	**$517,220**	$4,683	$0	$26,500	$1,008,497
E-7			3	$7,753,137	$1,890,918	$2,135,101	$14,048	$0	$26,500	$4,066,567
E-8			1	**$1,886,475**	$460,094	**$517,220**	$4,683	$0	$26,500	$1,008,497
E-9			1	$1,197,984	$292,177	$326,050	$4,683	$0	$26,500	$649,410
E-10			0	$0	$0	$0	$0	$488	$26,500	$26,988
E-11			1	$1,372,781	$334,809	$390,558	$4,683	$0	$26,500	$756,550
E-12			1	**$1,886,475**	$460,094	**$517,220**	$4,683	$488	$26,500	$1,008,985
Totals	1	1	12		$5,521,127	$6,206,643	$56,195	$976	$291,500	$12,076,441

[a] Values in bold type indicate that an average value was used.

Table 6-16. "Beyond the Floor" Cost Effectiveness [a]

MACT implementation	Doors and windows	Model plants: Flooring	Interior paneling and tileboard (Class 1 hardboard)	Other interior panels	Exterior siding, doorskins, and miscellaneous	Totals
Emission Reductions						
Total organic HAP emission reductions (ton/yr)	2,528	297	1,417	250	788	5,280
Total organic HAP emission reductions (Mg/yr)	2,293	269	1,285	227	715	4,790
Costs						
Performance Testing	$312,180	$187,308	$163,895	$108,062	$332,046	$1,103,491
Recordkeeping and Reporting	$1,325,000	$1,325,000	$397,500	$662,500	$1,722,500	$5,432,500
Computer Equipment	$16,259	$24,389	$1,219	$10,318	$5,765	$57,950
Annualized TCI (RTO)	$14,025,923	$3,814,765	$4,059,707	$6,013,838	$32,624,828	$60,539,061
Operating Costs (RTO)	$15,156,127	$3,849,750	$4,152,659	$6,567,977	$36,675,617	$66,402,130
Total annual cost for industry	$30,835,489	$9,201,212	$8,774,980	$13,362,695	$71,360,756	$133,535,132
Cost Effectiveness ($/ton)	$12,198	$30,981	$6,193	$53,451	$90,559	$25,291
Cost Effectiveness ($/Mg)	$13,445	$34,150	$6,826	$58,919	$99,824	$27,878

[a] Assumes 100% capture and 90% destruction.

6.15 COMPARISON OF COST OPTIONS

For the wood building products (surface coating) NESHAP, there are two basic options of organic HAP control. The use of low- or no-HAP coatings is valid as a pollution prevention option and would cost the entire industry of 205 estimated major source facilities either $27.3 million. This option is considered a pollution prevention option since pollution that would normally result from high-HAP coatings is avoided by the use of low- or no-HAP coatings. On the other hand, the installation of RTOs is considered a pollution control option since these devices destroy a fraction of the organic HAP emissions by oxidation.

The installation, operation, and maintenance of RTOs would cost the entire industry of 205 major source facilities an estimated $133.5 million. This option is cost prohibitive, requiring six times the amount of monetary investment and providing only 1.6 times the organic HAP reduction. Therefore, the use of RTOs as a "beyond the floor" control option is not cost effective as a compliance option for existing sources to meet the proposed NESHAP requirement.

6.16 REFERENCES

1. Memorandum from Reeves, D., MRI, to Lluberas, L., EPA/CCPG and Sorrels, L., EPA/ISEG. April 25, 1999. Number of Major Sources within the Wood Building Products (Surface Coating) Industry.

TECHNICAL REPORT DATA

(Please read Instructions on reverse before completing)

1. REPORT NO. EPA-453/R-00-003	2.	3. RECIPIENT'S ACCESSION NO.
4. TITLE AND SUBTITLE National Emission Standards for Hazardous Air Pollutants (NESHAP) for the Wood Building Products (Surface Coating) Industry		5. REPORT DATE May 2001 6. PERFORMING ORGANIZATION CODE
7. AUTHOR(S) Luis Lluberas		8. PERFORMING ORGANIZATION REPORT NO.
9. PERFORMING ORGANIZATION NAME AND ADDRESS Office of Air Quality Planning and Standards U. S. Environmental Protection Agency Research Triangle Park, NC 27711		10. PROGRAM ELEMENT NO. 11. CONTRACT/GRANT NO. 68-D6-0012, TO No. 47
12. SPONSORING AGENCY NAME AND ADDRESS Office of Air and Radiation U. S. Environmental Protection Agency Washington, D.C. 20460		13. TYPE OF REPORT AND PERIOD COVERED 14. SPONSORING AGENCY CODE EPA/OAR/OAQPS/ESD/CCPG
15. SUPPLEMENTARY NOTES		

16. ABSTRACT

National emission standards to control the emission of hazardous air pollutants (HAP) from the Wood Building Products (Surface Coating) industry are being proposed under Section 112 of the Clean Air Act. This standard will reduce emissions from major source wood building product (surface coating) facilities that emit either 10 tons of one specific HAP or 25 tons of total HAP per year. A wood building product is defined as any finished or laminated wood product that contains more than 50 percent by weight wood or wood fiber and is used in the construction, either interior or exterior, of a residential, commercial, or institutional building. These emission reductions are expected through a switch from high-HAP coatings to low- or no-HAP coatings. This option is less cost prohibitive than the use of a regenerative thermal oxidizer (RTO), which was examined as an "beyond the floor" control option. This regulation will require each affected source to track the HAP content, the solids content and the amount of each coating applied by the facility. These values will be used to calculate an overall facility emission limit in units of lb HAP/gal solids.

17. KEY WORDS AND DOCUMENT ANALYSIS

a. DESCRIPTORS	b. IDENTIFIERS/OPEN ENDED TERMS	c. COSATI Field/Group
surface coating, wood building products, air pollution, NESHAP, hazardous air pollutant, HAP, window, door, panel, reconstituted wood, flooring, tileboard, doorskin, Class I hardboard, laminate flooring	air pollution control wood building product manufacturing stationary sources	
18. DISTRIBUTION STATEMENT Unlimited	19. SECURITY CLASS *(Report)* Unclassified	21. NO. OF PAGES
	20. SECURITY CLASS *(Page)* Unclassified	22. PRICE

EPA Form 2220-1 (Rev. 4-77)
PREVIOUS EDITION IS OBSOLETE